UNITED STATES PATENT AND TRADEMARK OFFICE

Commissioner for Patents
United States Patent and Trademark Office
P.O. Box 1450
Alexandria, VA 22313-1450
www.uspto.gov

SCOTT A. BELL
2206 Carnegie Lane Unit C
Redondo Beach, CA 90278

COPY MAILED
OCT 27 2005
OFFICE OF PETITIONS

In re Application of	:	
Bell & Hawes	:	
Application No. 10/407,786	:	
Filed: April 7, 2003	:	
Title of Invention: PACKAGE	:	
ASSEMBLY WITH FOAMED TOPPING	:	ON PETITION

This is a decision on the Petition to Revive per 37 CFR 1.181(a)(3), filed September 16, 2005. The petition is properly treated under 37 CFR 1.137(a).

The Petition is **dismissed as untimely**.

Background

A non-final Office action was mailed March 11, 2005. Applicant filed a response in the form of an Amendment on June 9, 2005. The Amendment was considered non-compliant. Applicant was so notified in a Notice of Non-Compliant Amendment mailed June 17, 2005, and Applicant was given one (1) month within which to reply to the Notice. Extensions of time were available under 37 CFR 1.136(a)[1].

Applicant filed an Amendment in response to the Notice on July 15, 2005; however, the July 15, 2005 response was also non-compliant. Applicant was so notified by correspondence entitled Failure to Acceptably Respond to Notice of Noncompliant Amendment (37 CFR 1.121) (hereinafter "Second Notice"), mailed July 27, 2005. The second Notice informed Applicant that "the period for reply continues to run from the mailing date of the prior Notice of Non-Compliant Amendment." The second Notice also provided that "if the period for reply set forth in the prior Notice of Non-Compliant Amendment has expired, this application will become abandoned unless applicant: 1) corrects the deficiency, and 2) obtains an extension of time under 37 CFR 1.136(a)."

[1] Accord 37 CFR 1.135(c).

The instant petition

In response to the second Notice, Applicant files the instant petition and credit card payment authorization form. Applicant avers that he "authorize[d] the PTO to charge any and all fees necessary for the filing of this petition to the credit card." Petition at p.2. Applicant surmises that the application is abandoned for failure to reply to the March 11, 2005 non-final Office action. Applicant request that the application be restored to pending tatus, and provide that the failure to properly respond to the March 11, 2005 Office action was … unavoidable. Petition at pp. 6-8.

A review of the file reveals that applicant's credit card was charged the fee for a one month extension-of-time, $60.00.

Analysis and conclusion

Applicant is advised that the Notice of Non-Compliant Amendment mailed June 17, 2005, set a new reply period of one (1) month for Applicant. The Notice also provided for extensions of time under 37 CFR 1.136(a).

As such, Applicant was given until July 17, 2005 to respond without extensions of time, and until December 17, 2005, to reply to the Notice with extensions of time (the Notice provided that "this application will become abandoned unless applicant: 1) corrects the deficiency, and 2) obtains an extension of time under 37 CFR 1.136(a). As such, a proper reply filed after July 17, 2005 must include the correction to the amendment required by the Notice and the fee for the appropriate extension of time. Should Applicant fail to file a complete and proper reply to the Notice, including the appropriate extension of time fee, the application will become abandoned as of the end of the one-month period set in the Notice, or July 17, 2005.

Here, Applicant's credit card was charged the one (1) month extension of time fee. However, the reply was received in this Office with this petition on September 16, 2005. As such, a two (2) month extension-of-time fee, $225.00, would have been required. Applicant may not rely upon his authorizing this Office "to charge any and all fees necessary for the filing of this petition to the credit card." Id. When using a credit card authorization form, Applicant must specify the amount to be charged.

Applicant is further advised that this Office 1) does not retain credit card authorization forms in the application file; 2) is unable to charge a credit card anything other than the amount

listed on the PTO-2038. As such, it is Applicant's responsibility to provide the appropriate fee, and that credit card authorization forms must specify the amount to be charged to the credit card. A complete list of extension of time, and all other Patent Office fees are available on our web site at www.uspto.gov. Since the form is not retained, we are unable to "go back" and charge any additional fees.

In this case, the period of time to reply continues to run and additional extension of time fees are required, because the reply is not a complete and proper reply unless and until it includes the appropriate extension of time fee.

Finally, for Applicant's benefit, the following is provided:

If a reply (the proper fee) is filed on or before November 17, 2005, the additional extension of time fee required would be for a four (4) month extension of time ($795) minus the $60 paid for the one (1) month extension of time fee already charged, or $735.

If a reply (the proper fee) is filed on or before December 17, 2005, the additional extension of time fee required would be for a five (5) month extension of time ($1080) minus the $60 paid for the one (1) month extension of time fee already charged, or $1020.

All of this assumes that Applicant has made the corrections to the Amendment as required by the Examiner.

Further correspondence with respect to this matter should be addressed as follows:

By mail: Commissioner for Patents
PO Box 1450
Alexandria, VA 22313-1450

By FAX: (571) 273-8300
Attn: Office of Petitions

By hand: Customer Service Window
Randolph Building
401 Dulany Street
Alexandria, VA 22314

Telephone inquiries concerning this matter should be directed to the undersigned at (571) 272-3232.

Derek L. Woods
Attorney
Office of Petitions

Enclosure: Failure to Acceptably Respond to Notice of Noncompliant Amendment (37 CFR 1.121)

RECEIVED
CENTRAL FAX CENTER
NOV 16 2005

Fax to: 571-273-8300

PTO/SB/97 (09-04)
Approved for use through 07/31/2006. OMB 0651-0031
U.S. Patent and Trademark Office; U.S. DEPARTMENT OF COMMERCE
Under the Paperwork Reduction Act of 1995, no persons are required to respond to a collection of information unless it contains a valid OMB control number.

Certificate of Transmission under 37 CFR 1.8

I hereby certify that this correspondence is being facsimile transmitted to the United States Patent and Trademark Office

on 11/16/05.
Date

Signature

Scott A. Bell
Typed or printed name of person signing Certificate

10/407,786
Registration Number, if applicable

310-613-5748
Telephone Number

Note: Each paper must have its own certificate of transmission, or this certificate must identify each submitted paper.

11/17/2005 TL0111 00000031 10407786
01 FC:2254 795.00 OP

Adjustment date: 11/17/2005 TL0111
09/19/2005 TL0111 00000043 10407786
01 FC:2251 -60.00 OP

This collection of information is required by 37 CFR 1.8. The information is required to obtain or retain a benefit by the public which is to file (and by the USPTO to process) an application. Confidentiality is governed by 35 U.S.C. 122 and 37 CFR 1.11 and 1.14. This collection is estimated to take 1.8 minutes to complete, including gathering, preparing, and submitting the completed application form to the USPTO. Time will vary depending upon the individual case. Any comments on the amount of time you require to complete this form and/or suggestions for reducing this burden, should be sent to the Chief Information Officer, U.S. Patent and Trademark Office, U.S. Department of Commerce, P.O. Box 1450, Alexandria, VA 22313-1450. DO NOT SEND FEES OR COMPLETED FORMS TO THIS ADDRESS. **SEND TO: Commissioner for Patents, P.O. Box 1450, Alexandria, VA 22313-1450.**

If you need assistance in completing the form, call 1-800-PTO-9199 and select option 2.

RECEIVED
CENTRAL FAX CENTER

UNITED STATES PATENT AND TRADEMARK OFFICE NOV 16 2005

Commissioner for Patents
United States Patent and Trademark Office
P.O. Box 1450
Alexandria, VA 22313-1450
www.uspto.gov

Derek
↳ ø Nov 14 Left msg

Kim

SCOTT A. BELL
2206 Carnegie Lane Unit C
Redondo Beach, CA 90278

Bob Ann

COPY MAILED
OCT 27 2005
OFFICE OF PETITIONS

In re Application of :
Bell & Hawes :
Application No. 10/407,786 :
Filed: April 7, 2003 :
Title of Invention: PACKAGE :
ASSEMBLY WITH FOAMED TOPPING : ON PETITION

~~This is a decision~~ on the ~~Petition~~ to Revive per 37 CFR 1.181(a)(3), filed September 16, 2005. The petition is properly treated under 37 CFR 1.137(a).

The Petition is **dismissed as untimely**.

Background

A non-final Office action was mailed March 11, 2005. Applicant filed a response in the form of an Amendment on June 9, 2005. The Amendment was considered non-compliant. Applicant was so notified in a Notice of Non-Compliant Amendment mailed June 17, 2005, and Applicant was given one (1) month within which to reply to the Notice. Extensions of time were available under 37 CFR 1.136(a)[1].

Applicant filed an Amendment in response to the Notice on July 15, 2005; however, the July 15, 2005 response was also non-compliant. Applicant was so notified by correspondence entitled Failure to Acceptably Respond to Notice of Noncompliant Amendment (37 CFR 1.121) (hereinafter "Second Notice"), mailed July 27, 2005. The second Notice informed Applicant that "the period for reply continues to run from the mailing date of the prior Notice of Non-Compliant Amendment." The second Notice also provided that "if the period for reply set forth in the prior Notice of Non-Compliant Amendment has expired, this application will become abandoned unless applicant: 1) corrects the deficiency, and 2) obtains an extension of time under 37 CFR 1.136(a)."

[1] Accord 37 CFR 1.135(c).

571 - 31-97

The instant petition

In response to the second Notice, Applicant files the instant petition and credit card payment authorization form. Applicant avers that he "authorize[d] the PTO to charge any and all fees necessary for the filing of this petition to the credit card." Petition at p.2. Applicant surmises that the application is abandoned for failure to reply to the March 11, 2005 non-final Office action. Applicant request that the application be restored to pending tatus, and provide that the failure to properly respond to the March 11, 2005 Office action was … unavoidable. Petition at pp. 6-8.

A review of the file reveals that applicant's credit card was charged the fee for a one month extension-of-time, $60.00.

Analysis and conclusion

Applicant is advised that the Notice of Non-Compliant Amendment mailed June 17, 2005, set a new reply period of one (1) month for Applicant. The Notice also provided for extensions of time under 37 CFR 1.136(a).

As such, Applicant was given until July 17, 2005 to respond without extensions of time, and until December 17, 2005, to reply to the Notice with extensions of time (the Notice provided that "this application will become abandoned unless applicant: 1) corrects the deficiency, and 2) obtains an extension of time under 37 CFR 1.136(a). As such, a proper reply filed after July 17, 2005 must include the correction to the amendment required by the Notice and the fee for the appropriate extension of time. Should Applicant fail to file a complete and proper reply to the Notice, including the appropriate extension of time fee, the application will become abandoned as of the end of the one-month period set in the Notice, or July 17, 2005.

Here, Applicant's credit card was charged the one (1) month extension of time fee. However, the reply was received in this Office with this petition on September 16, 2005. As such, a two (2) month extension-of-time fee, $225.00, would have been required. Applicant may not rely upon his authorizing this Office "to charge any and all fees necessary for the filing of this petition to the credit card." Id. When using a credit card authorization form, Applicant must specify the amount to be charged.

Applicant is further advised that this Office 1) does not retain credit card authorization forms in the application file; 2) is unable to charge a credit card anything other than the amount

listed on the PTO-2038. As such, it is Applicant's responsibility to provide the appropriate fee, and that credit card authorization forms must specify the amount to be charged to the credit card. A complete list of extension of time, and all other Patent Office fees are available on our web site at www.uspto.gov. Since the form is not retained, we are unable to "go back" and charge any additional fees.

In this case, the period of time to reply continues to run and additional extension of time fees are required, because the reply is not a complete and proper reply unless and until it includes the appropriate extension of time fee.

Finally, for Applicant's benefit, the following is provided:

If a reply (the proper fee) is filed on or before November 17, 2005, the additional extension of time fee required would be for a four (4) month extension of time ($795) minus the $60 paid for the one (1) month extension of time fee already charged, or $735.

If a reply (the proper fee) is filed on or before December 17, 2005, the additional extension of time fee required would be for a five (5) month extension of time ($1080) minus the $60 paid for the one (1) month extension of time fee already charged, or $1020.

All of this assumes that Applicant has made the corrections to the Amendment as required by the Examiner.

Further correspondence with respect to this matter should be addressed as follows:

By mail: Commissioner for Patents
PO Box 1450
Alexandria, VA 22313-1450

By FAX: (571) 273-8300
Attn: Office of Petitions

571-272-3282
Help Desk

By hand: Customer Service Window
Randolph Building
401 Dulany Street
Alexandria, VA 22314

Renewed Petition

Telephone inquiries concerning this matter should be directed to the undersigned at (571) 272-3232.

Derek L. Woods
Attorney
Office of Petitions

Enclosure: Failure to Acceptably Respond to Notice of Noncompliant Amendment (37 CFR 1.121)

571-272-3209

UNITED STATES PATENT AND TRADEMARK OFFICE

UNITED STATES DEPARTMENT OF COMMERCE
United States Patent and Trademark Office
Address: COMMISSIONER FOR PATENTS
P.O. Box 1450
Alexandria, Virginia 22313-1450
www.uspto.gov

APPLICATION NO.	FILING DATE	FIRST NAMED INVENTOR	ATTORNEY DOCKET NO.	CONFIRMATION NO.
10/407,786	04/07/2003	Scott A. Bell	CAP	1979

7590 07/27/2005

SCOTT A. BELL
2206 Carnegie Lane Unit C
Redondo Beach, CA 90278

EXAMINER
JACYNA, J CASIMER

ART UNIT	PAPER NUMBER
3751	

DATE MAILED: 07/27/2005

Please find below and/or attached an Office communication concerning this application or proceeding.

PTO-90C (Rev. 10/03)

10/710 1109

UNITED STATES PATENT AND TRADEMARK OFFICE

COMMISSIONER FOR PATENTS
UNITED STATES PATENT AND TRADEMARK OFFICE
P.O. BOX 1450
ALEXANDRIA, VA 22313-1450
www.uspto.gov

Failure to Acceptably Respond to
Notice of Non-Compliant Amendment (37 CFR 1.121)
No New Time Period for Reply is Provided

The amendment document filed on 7/15/05 fails to provide the corrective action required by the prior **Notice of Non-Compliant Amendment (37 CFR 1.121)** mailed on 6/17/05. The amendment, including both the originally filed amendment and the amendment filed in response to the prior notice, is still considered to be non-compliant under 37 CFR 1.121. In order for the amendment document to be compliant, correction of the item(s) listed below is required. **Only the corrected section of the non-compliant amendment document must be resubmitted (in its entirety), e.g., the entire "Amendments to the claims" section of applicant's amendment document must be re-submitted.** 37 CFR 1.121(h).

The period for reply continues to run from the mailing date of the prior Notice of Non-Compliant Amendment. The corrections listed below must be timely filed to avoid abandonment of the application. No new time period for reply is provided in this communication. See the Manual of Patent Examining Procedure (MPEP) § 714.03.

If the period for reply set forth in the prior Notice of Non-Compliant Amendment has expired, this application will become abandoned unless applicant: (1) corrects the deficiency, and (2) obtains an extension of time under 37 CFR 1.136(a). In no case may an applicant reply outside the SIX (6) MONTH statutory period or obtain an extension for more than FIVE (5) MONTHS beyond the date for reply set forth in the prior Notice of Non-Compliant Amendment (37 CFR 1.121).

THE FOLLOWING CHECKED (X) ITEM(S) CAUSE THE AMENDMENT DOCUMENT TO BE NON-COMPLIANT:

- ☐ 1. Amendments to the specification:
  - ☐ A. Amended paragraph(s) do not include markings.
  - ☐ B. New paragraph(s) should not be underlined.
  - ☐ C. Other_____
- ☐ 2. Abstract:
  - ☐ A. Not presented on a separate sheet. 37 CFR 1.72.
  - ☐ B. Other_____
- ☐ 3. Amendments to the drawings: _____
- ☑ 4. Amendments to the claims:
  - ☑ A. A complete listing of all of the claims is not present.
  - ☑ B. The listing of claims does not include the text of all pending claims (including withdrawn claims)
  - ☐ C. Each claim has not been provided with the proper status identifier, and as such, the individual status of each claim cannot be identified. Note: the status of every claim must be indicated after its claim number by using one of the following 7 status identifiers: (Original), (Currently amended), (Canceled), (Withdrawn), (Previously presented), (New) and (Not entered).
  - ☐ D. The claims of this amendment paper have not been presented in ascending numerical order.
  - ☑ E. Other: Withdrawn Clms must be presented.

For further explanation of the amendment format required by 37 CFR 1.121, see MPEP § 714 and the USPTO website at http://www.uspto.gov/web/offices/pac/dapp/opla/preognotice/officeflyer.pdf.

Mo Douglas
Supervisory Legal Instruments Examiner (SLIE)

571-272-4343
Telephone No.

Rev. 7/04

UNITED STATES PATENT AND TRADEMARK OFFICE

COMMISSIONER FOR PATENTS
UNITED STATES PATENT AND TRADEMARK OFFICE
P.O. BOX 1450
ALEXANDRIA, VA 22313-1450
www.uspto.gov

SCOTT A. BELL
2206 Carnegie Lane Unit C
Redondo Beach, CA 90278

COPY MAILED

DEC 0 8 2005

OFFICE OF PETITIONS

In re Application of :
Bell & Hawes :
Application No. 10/407,786 :
Filed: April 7, 2003 :
Title of Invention: PACKAGE :
ASSEMBLY WITH FOAMED TOPPING : ON PETITION

This is a decision on the Petition to Revive per 37 CFR 1.181(a)(3), filed September 16, 2005. The petition is properly treated under 37 CFR 1.137(a).

The Petition is **dismissed as moot**.

Background

A non-final Office action was mailed March 11, 2005. Applicant filed a response in the form of an Amendment on June 9, 2005. The Amendment was considered non-compliant. Applicant was so notified in a Notice of Non-Compliant Amendment mailed June 17, 2005, and Applicant was given one (1) month within which to reply to the Notice. Extensions of time were available under 37 CFR 1.136(a)[1].

Applicant filed an Amendment in response to the Notice on July 15, 2005; however, the July 15, 2005 response was also non-compliant. Applicant was so notified by correspondence entitled Failure to Acceptably Respond to Notice of Noncompliant Amendment (37 CFR 1.121) (hereinafter "Second Notice"), mailed July 27, 2005. The second Notice informed Applicant that "the period for reply continues to run from the mailing date of the prior Notice of Non-Compliant Amendment." The second Notice also provided that "if the period for reply set forth in the prior Notice of Non-Compliant Amendment has expired, this application will become abandoned unless applicant: 1) corrects the deficiency, and 2) obtains an extension of time under 37 CFR 1.136(a)."

[1] Accord 37 CFR 1.135(c).

The September 16, 2005 Petition

In response to the second Notice, Applicant filed a petition and credit card payment authorization form on September 16, 2005. Applicant argued that he "authorize[d] the PTO to charge any and all fees necessary for the filing of this petition to the credit card." Petition at p.2. Applicant surmised that the application was abandoned for failure to reply to the March 11, 2005 non-final Office action. Applicant requested that the application be restored to pending status, and provided that the failure to properly respond to the March 11, 2005 Office action was … unavoidable. Petition at pp. 6-8.

A review of the file revealed that applicant's credit card was charged the fee for a one month extension-of-time, $60.00.

October 27, 2005 Decision Dismissing Petition

In a Decision mailed October 27, 2005, Applicant was advised that the Notice of Non-Compliant Amendment mailed June 17, 2005, set a new reply period of one (1) month for Applicant. The Notice also provided for extensions of time under 37 CFR 1.136(a).

As such, Applicant was given until July 17, 2005 to respond without extensions of time, and until December 17, 2005, to reply to the Notice with extensions of time (the Notice provided that "this application will become abandoned unless applicant: 1) corrects the deficiency, and 2) obtains an extension of time under 37 CFR 1.136(a). As such, Applicant was advised that a proper reply filed after July 17, 2005 must include the correction to the amendment required by the Notice and the fee for the appropriate extension of time. Should Applicant fail to file a complete and proper reply to the Notice, including the appropriate extension of time fee, the application will become abandoned as of the end of the one-month period set in the Notice, or July 17, 2005.

Applicant's credit card was charged the one (1) month extension of time fee. However, the reply was received in this Office with the September 16, 2005 petition (on September 16, 2005). As such, Applicant was informed, a two (2) month extension-of-time fee, $225.00, would have been required. Applicant was also informed that he could not rely upon his authorizing this Office "to charge any and all fees necessary for the filing of this petition to the credit card." Id. When using a credit card authorization form, Applicant must specify the amount to be charged.

Applicant was further advised that this Office 1) does not retain credit card authorization forms in the application file;

2) is unable to charge a credit card anything other than the amount listed on the PTO-2038. As such, Applicant was advised that it is Applicant's responsibility to provide the appropriate fee, and that credit card authorization forms must specify the amount to be charged to the credit card. Applicant was advised that a complete list of extension of time, and all other Patent Office fees are available on our web site at www.uspto.gov. Since the form is not retained, we are unable to "go back" and charge any additional fees.

In this case, Applicant was informed that the period of time to reply continues to run and additional extension of time fees are required, because the reply is not a complete and proper reply unless and until it includes the appropriate extension of time fee.

Finally, for Applicant's benefit, the following was provided:

If a reply (the proper fee) is filed on or before November 17, 2005, the additional extension of time fee required would be for a four (4) month extension of time ($795) minus the $60 paid for the one (1) month extension of time fee already charged, or $735.

If a reply (the proper fee) is filed on or before December 17, 2005, the additional extension of time fee required would be for a five (5) month extension of time ($1080) minus the $60 paid for the one (1) month extension of time fee already charged, or $1020.

All of this assumes that Applicant has made the corrections to the Amendment as required by the Examiner. (Emphasis supplied).

The instant petition

Applicant files the instant petition and fee for a four (4) month extension of time, but has not filed an Amendment in response to the Office action. Instead, Applicant asserts that the October 27, 2005 Decision ignored the previously filed declarations (the June 9, 2005 and July 15, 2005 Amendments). Applicant also asserts that extensions of time may include authorizations to charge the required amount, and having included such an authorization with the credit card authorization form filed with the September 16, 2005 Petition, this Office should have charged the required amount. Applicant concludes that to now charge applicant additional fees is a PTO error and Applicant requests a refund of the additional extension of time fees.

Analysis and conclusion

Initially it is noted that the October 27, 2005 Decision included a section entitled "Background", wherein this Office addressed both the June 9, 2005 and July 15, 2005 Amendments. Applicant was advised that the Amendments were deemed non-compliant. Applicant was mailed Notices to this effect. Applicant is advised that it is the Examiner who deemed the Amendments to be non-compliant. The October 27, 2005 Decision simply stated the "Background" of the application, and therein noted that the Applicant had been informed by the Examiner that the June 9, 2005 and July 15, 2005 Amendments were non-compliant. A copy of the Failure to Acceptably Respond to Notice of Noncompliant Amendment (37 CFR 1.121) was also enclosed in the Decision for Applicant's reference.

Further to this, Applicant is again informed that he must file a complete and proper reply as the condition of allowance may require. See, 35 U.S.C. § 135. A proper reply must comply with 37 CFR 1.121. See, Notices of Non-compliant Amendment.

Regarding the appropriate extension of time fee, Applicant was advised that, if a reply was filed before November 17, 2005, a four (4) month extension of time was required. Applicant was also advised that, if a reply was filed before December 17, 2005, that a five (5) month extension of time fee was required. Here, Applicant filed this petition and included a certificate of facsimile executed on November 23, 2005. As such, a five (5) month extension of time is required (since it is after November 17, 2005). Applicant has failed to include the proper fee.

Also, as to the ability of this Office to charge any and all fees necessary, that ability exists where an applicant has a deposit account with this Office, and not when processing credit card payments.

In summary, Applicant has included neither the complete and proper reply, nor the appropriate extension of time fee.

Regarding the appropriate reply, it is recommended Applicant: 1) speak with the Examiner; 2) seek assistance in prosecuting his application from the Patent Assistance Center, at 1-800-786-9199; 3), contact the Office of Independent Inventors, at 703-306-5568, or 4) seek the assistance of a patent attorney.

Finally, Applicant is advised that the application has not yet become abandoned, because Applicant has until December 17, 2005

to file a complete and proper reply. However, after December 17, 2005, the application will become abandoned. Thereafter, a petition to revive the application and the petition fee must be filed. A petition to revive must also include a proper reply[2] before a petition may be granted.

Further correspondence with respect to this matter should be addressed as follows:

By mail: Commissioner for Patents
PO Box 1450
Alexandria, VA 22313-1450

By FAX: (571) 273-8300
Attn: Office of Petitions

By hand: Customer Service Window
Randolph Building
401 Dulany Street
Alexandria, VA 22314

Telephone inquiries concerning this matter should be directed to the undersigned at (571) 272-3232.

Derek L. Woods
Attorney
Office of Petitions

[2] A proper reply includes a proper amendment; a continuing application; a Request for Continued Examination, or an Appeal Brief.

UNITED STATES PATENT AND TRADEMARK OFFICE

COMMISSIONER FOR PATENTS
UNITED STATES PATENT AND TRADEMARK OFFICE
P.O. BOX 1450
ALEXANDRIA, VA 22313-1450
www.uspto.gov

SCOTT A. BELL
2206 Carnegie Lane Unit C
Redondo Beach, CA 90278

COPY MAILED

MAR 16 2006

OFFICE OF PETITIONS

In re Application of :
Bell & Hawes :
Application No. 10/407,786 :
Filed: April 7, 2003 :
Title of Invention: PACKAGE :
ASSEMBLY WITH FOAMED TOPPING : ON PETITION

This is a decision on the Letter, filed December 15, 2005, requesting the granting of Petition to Revive per 37 CFR 1.181(a)(3), filed September 16, 2005, and a refund of the fee overpayment. The petition is properly treated as a Petition under 37 CFR 1.181.

The Petition is **granted**.

Background

A non-final Office action was mailed March 11, 2005. Applicant filed a response in the form of an Amendment on June 9, 2005. The Amendment was considered non-compliant. Applicant was so notified in a Notice of Non-Compliant Amendment mailed June 17, 2005, and Applicant was given one (1) month within which to reply to the Notice. Extensions of time were available under 37 CFR 1.136(a)[1].

Applicant filed an Amendment in response to the Notice on July 15, 2005; however, the July 15, 2005 response was also non-compliant. Applicant was so notified by correspondence entitled Failure to Acceptably Respond to Notice of Noncompliant Amendment (37 CFR 1.121) (hereinafter "Second Notice"), mailed July 27, 2005. The second Notice informed Applicant that "the period for reply continues to run from the mailing date of the prior Notice of Non-Compliant Amendment." The second Notice also provided that "if the period for reply set forth in the prior Notice of Non-Compliant Amendment has expired, this application will become abandoned

[1] Accord 37 CFR 1.135(c).

unless applicant: 1) corrects the deficiency, and 2) obtains an extension of time under 37 CFR 1.136(a)."

Also on July 27, 2005, Applicant filed, via facsimile, a Supplemental Response to the June 17, 2005 Notice of Non-Compliant Amendment, that was not-received in the Office[2].

The September 16, 2005 Petition

In response to the second Notice, Applicant filed a petition and a copy of the Supplemental Amendment bearing a Certificate of Facsimile, along with a "sending confirmation" indicating receipt by this Office of an Amendment and a Credit Card Payment Authorization Form on September 16, 2005. Applicant argued that he "authorize[d] the PTO to charge any and all fees necessary for the filing of this petition to the credit card." Petition at p.2. Applicant surmised that the application was abandoned for failure to reply to the March 11, 2005 non-final Office action. Applicant requested that the application be restored to pending status, and provided that the failure to properly respond to the March 11, 2005 Office action was … unavoidable. Petition at pp. 6-8.

A review of the file revealed that applicant's credit card was charged the fee for a one month extension-of-time, $60.00.

October 27, 2005 Decision Dismissing Petition

In a Decision mailed October 27, 2005, Applicant was advised that the Notice of Non-Compliant Amendment mailed June 17, 2005, set a new reply period of one (1) month for Applicant. The Notice also provided for extensions of time under 37 CFR 1.136(a).

As such, Applicant was given until July 17, 2005 to respond without extensions of time, and until December 17, 2005, to reply to the Notice with extensions of time (the Notice provided that "this application will become abandoned unless applicant: 1) corrects the deficiency, and 2) obtains an extension of time under 37 CFR 1.136(a). As such, Applicant was advised that a proper reply filed after July 17, 2005 must include the correction to the amendment required by the Notice and the fee for the appropriate extension of time. Should Applicant fail to file a complete and proper reply to the Notice, including the appropriate extension of time fee, the

[2] The telephone number listed on the certificate of facsimile transmission was that of the Legal Instruments Examiner, and not the central fax number for the Office.

application will become abandoned as of the end of the one-month period set in the Notice, or July 17, 2005.

Applicant's credit card was charged the one (1) month extension of time fee. However, the reply was received in this Office with the September 16, 2005 petition (on September 16, 2005). As such, Applicant was informed, a two (2) month extension-of-time fee, $225.00, would have been required. Applicant was also informed that he could not rely upon his authorizing this Office "to charge any and all fees necessary for the filing of this petition to the credit card." Id. When using a credit card authorization form, Applicant must specify the amount to be charged.

Applicant was further advised that this Office 1) does not retain credit card authorization forms in the application file; 2) is unable to charge a credit card anything other than the amount listed on the PTO-2038. As such, Applicant was advised that it is Applicant's responsibility to provide the appropriate fee, and that credit card authorization forms must specify the amount to be charged to the credit card. Applicant was advised that a complete list of extension of time, and all other Patent Office fees are available on our web site at www.uspto.gov. Since the form is not retained, we are unable to "go back" and charge any additional fees.

In this case, Applicant was informed that the period of time to reply continued to run and additional extension of time fees were required, because the reply was not a complete and proper reply unless and until it includes the appropriate extension of time fee.

Finally, for Applicant's benefit, the following was provided:

If a reply (the proper fee) is filed on or before November 17, 2005, the additional extension of time fee required would be for a four (4) month extension of time ($795) minus the $60 paid for the one (1) month extension of time fee already charged, or $735.

If a reply (the proper fee) is filed on or before December 17, 2005, the additional extension of time fee required would be for a five (5) month extension of time ($1080) minus the $60 paid for the one (1) month extension of time fee already charged, or $1020.

All of this assume[d] that Applicant has made the corrections to the Amendment as required by the Examiner.(Emphasis supplied).

The November 23, 2005 petition

Applicant filed a petition and fee for a four (4) month extension of time, and Amendment in response to the Office action. Applicant asserted that the October 27, 2005 Decision ignored the previously filed declarations (the June 9, 2005 and July 15, 2005 Amendments). Applicant also asserted that extensions of time may include authorizations to charge the required amount, and having included such an authorization with the credit card authorization form filed with the September 16, 2005 Petition, this Office should have charged the required amount. Applicant concluded that to now charge applicant additional fees is a PTO error and Applicant requests a refund of the additional extension of time fees.

December 8, 2005 Decision dismissing the November 23, 2005 petition

Initially it was noted that the October 27, 2005 Decision included a section entitled "Background", wherein this Office addressed both the June 9, 2005 and July 15, 2005 Amendments. Applicant was advised that the Amendments were deemed non-compliant. Applicant was mailed Notices to this effect. Applicant was advised that it is the Examiner who deemed the Amendments to be non-compliant. The October 27, 2005 Decision simply stated the "Background" of the application, and therein noted that the Applicant had been informed by the Examiner that the June 9, 2005 and July 15, 2005 Amendments were non-compliant. A copy of the Failure to Acceptably Respond to Notice of Noncompliant Amendment (37 CFR 1.121) was also enclosed in the Decision for Applicant's reference.

Further to this, Applicant was again informed, albeit incorrectly[3], that he must file a complete and proper reply as the condition of allowance may require. See, 35 U.S.C. § 135. A proper reply must comply with 37 CFR 1.121. See, Notices of Non-compliant Amendment.

Regarding the appropriate extension of time fee, Applicant was advised that, if a reply was filed before November 17, 2005, a four (4) month extension of time was required. Applicant was also advised that, if a reply was filed before December 17, 2005, that a five (5) month extension of time fee was required. Here, Applicant filed this petition and included a certificate of facsimile executed on November 23, 2005. As such, a five (5)

[3] This was incorrect because Applicant had filed a reply on July 27, 2005.

month extension of time was required (since it is after November 17, 2005). Applicant had failed to include the proper fee.

Also, as to the ability of this Office to charge any and all fees necessary, Applicant was advised that that ability exists where an applicant has a deposit account with this Office, and not when processing credit card payments.

In summary, Applicant was informed that he had included neither the complete and proper reply, nor the appropriate extension of time fee.

Finally, Applicant was advised that the application has not yet become abandoned, because Applicant has until December 17, 2005 to file a complete and proper reply. However, after December 17, 2005, the application would become abandoned. Thereafter, a petition to revive the application and the petition fee would be required. It was also noted that a petition to revive must also include a proper reply before a petition may be granted.

The instant petition

Applicant files the instant petition and asserts that facts have been established in this file by affidavits or declarations (and exhibits, in any). Applicant contends that facts are established by the declarations.

Applicant also asserts that a four (4) month extension of time was filed on November 16, 2005, as opposed to November 23, 2005. Thus the fee was timely paid.

Finally, Applicants assert that the July 27, 2005 filing was within the one (1) month extension of time and thus was timely.

Analysis and Conclusion

As to Applicant's assertion - that facts have been established in this file by affidavits or declarations - is correct; however, affidavits and declarations must be corroborated by documentary evidence, i.e. evidence of compliance with 37 CFR 1.8, in order to overcome a presumption, in this instance, that the correspondence was timely filed[4].

---

[4] In response to objections to the use of affidavits and/or declarations to establish a filing date, the Office indicated that such affidavits or declarations are considered to explain activities that are supported by exhibits (*i.e.*, corroborate evidence). See "Revision of Patent Procedure," 48 *Fed. Reg.* at 2702-03, 1027 *Off. Gaz. Pat. Office* at 27-28.

Here, Applicant filed a copy of the Supplemental Response on September 16, 2005, that included a Certificate of Facsimile Transmission under 37 CFR 1.8[5], and as such, has demonstrated the filing of the Supplemental Response on July 27, 2005.

Accordingly, the filing of the reply within one (1) month of the extendible period, coupled with the extension of time request, rendered the reply timely[6].

Further to this, the four (4) month extension of time filed on November 16, 2005, was unnecessary, and a refund has been scheduled.

Finally, Office records indicate that a Notice of Abandonment was mailed January 11, 2006. The Notice is hereby *sua sponte* withdrawn.

The application is being referred to Technology Center Art Unit 3751 for consideration of the Supplemental Response, filed July 27, 2005, and for further processing of the application consistent with this Decision.

Telephone inquiries concerning this matter should be directed to the undersigned at (571) 272-3232.

Derek L. Woods
Attorney
Office of Petitions

Thus, the Office appropriately requires the submission of corroborative documentary evidence to establish an application filing date.

[5] Applicant is advised that, effective December 1, 2003, all patent application related correspondence transmitted by facsimile must be directed to the central facsimile number, with a few exceptions below. The central facsimile number is (571) 273-8300. Replies to Office actions including after-final amendments that are transmitted by facsimile must be directed to the central facsimile number. See, MPEP 502.01.

[6] While Applicant improperly filed a general authorization to charge fees to his credit card, this Office improperly charged a one (1) month extension fee. As provided in 37 CFR 1.23, Payment of a fee by credit card must specify the amount to be charged to the credit card and such other information as is necessary to process the charge, and is subject to collection of the fee. The Office will not accept a general authorization to charge fees to a credit card. 37 CFR § 1.23

UNITED STATES PATENT AND TRADEMARK OFFICE

Commissioner for Patents
United States Patent and Trademark Office
P.O. Box 1450
Alexandria, VA 22313-1450
www.uspto.gov

HODGSON RUSS LLP
THE GUARANTY BUILDING
140 PEARL STREET
SUITE 100
BUFFALO, NY 14202-4040

COPY MAILED

DEC 18 2007

OFFICE OF PETITIONS

In re Application of	:	
Henry Guy Stevens	:	
Application No. 10/407,796	:	DECISION ON PETITION
Filed: April 4, 2003	:	
Attorney Docket No. 18872.0080	:	

This is a decision on the petition under the unintentional provisions of 37 CFR 1.137(b), filed August 10, 2007, to revive the above-identified application.

The petition is **GRANTED**.

The application became abandoned for failure to reply in a timely manner to the non-final Office action mailed, February 8, 2007, which set a shortened statutory period for reply of three (3) months. No extensions of time under the provisions of 37 CFR 1.136(a) were obtained. Accordingly, the application became abandoned on May 9, 2007.

The petition satisfies the requirements of 37 CFR 1.137(b) in that petitioner has supplied (1) the reply in the form of an amendment, (2) the petition fee of $750, and (3) a proper statement of unintentional delay.

Telephone inquiries concerning this decision should be directed to undersigned at (571) 272-1642.

This application is being referred to Technology Center AU 1714 for appropriate action by the Examiner in the normal course of business on the reply received August 10, 2007.

April M. Wise
Petitions Examiner
Office of Petitions

UNITED STATES PATENT AND TRADEMARK OFFICE

Commissioner for Patents
United States Patent and Trademark Office
P.O. Box 1450
Alexandria, VA 22313-1450
www.uspto.gov

MALIN HALEY AND DIMAGGIO, PA
1936 S ANDREWS AVENUE
FORT LAUDERDALE FL 33316

COPY MAILED

AUG 1 1 2005

OFFICE OF PETITIONS

In re Application of	:	
William Courtney	:	
Application No. 10/407,805	:	ON PETITION
Filed: April 4, 2003	:	
Attorney Docket No. 9297.6841	:	

This is a decision on the petition under 37 CFR 1.137(b), filed August 2, 2005, to revive the above-identified application.

This application became abandoned for failure to reply timely to the nonfinal Office Action mailed April 22, 2004, which set a three (3) month shortened statutory period to reply. Petitioner did not obtain any extensions of time to respond. Accordingly, this application became abandoned on July 23, 2004. A Notice of Abandonment was mailed on November 24, 2004.

Petitioner has met the requirements to revive the above-identified application pursuant to 37 CFR 1.137(b). Petitioner submitted the required reply in the form of an amendment, paid the petition fee, and made the proper statement of unintentional delay.

Accordingly, the petition is **granted.**

The Office notes that the address given in the petition differs from the address of record; however, the application file does not indicate that petitioner filed a change of correspondence address in this case. If the petitioner desires to receive future correspondence regarding this application, a change of correspondence address must be submitted. The Office will continue to send correspondence to the address of record until otherwise notified. As a one-time courtesy, the Office will mail a copy of the decision to the address listed on the petition.

The application file is being forwarded to Technology Center Art Unit 3617.

Telephone inquiries should be directed to the undersigned at (571) 272-3211.

Christina T. Donnell

Christina Tartera Donnell
Senior Petitions Attorney
Office of Petitions

Cc: Daniel S. Polley, PA
1215 East Broward Boulevard
Fort Lauderdale, FL 33301

UNITED STATES PATENT AND TRADEMARK OFFICE

Commissioner for Patents
United States Patent and Trademark Office
P.O. Box 1450
Alexandria, VA 22313-1450
www.uspto.gov

MAILED

MAY 1 1 2010

OFFICE OF PETITIONS

DECHERT LLP
P.O. BOX 390460
MOUNTAIN VIEW CA 94039-0460

In re Application of	:	
Thrue et al.	:	ON APPLICATION FOR
Application No. 10/407807	:	PATENT TERM ADJUSTMENT
Filing or 371(c) Date: 04/04/2003	:	
Attorney Docket Number:	:	
366929-014US (396510)	:	

This is a decision on the "APPLICATION FOR PATENT TERM ADJUSTMENT INCLUDING REQUEST FOR RECONSIDERATION OF PATENT TERM ADJUSTMENT UNDER 37 CFR § 1.705(b)," filed October 15, 2009. Applicants petition for reconsideration of the patent term adjustment calculation to 184 days, not zero (0) days as calculated by the Office as of the mailing of the initial determination of patent term adjustment. Applicant requests this correction based upon (1) an assertion that the Office erred in failing to calculate a reduction of 99 days; (2) an assertion that the Office erred in failing to calculate an adjustment of 145 days, and (3) on the basis that the Office will take in excess of three years to issue this patent.

The Application for Patent Term Adjustment Including Request for Reconsideration of Patent Term Adjustment ("PTA") under 37 CFR 1.705(b), as it relates to the assertion that the Office erred in failing to calculate a reduction of 99 days, and erred in failing to calculate an adjustment of 145 days, is **GRANTED to the EXTENT INDICATED**.

The Application for Patent Term Adjustment Including Request for Reconsideration of Patent Term Adjustment ("PTA") under 37 CFR 1.705(b), as it relates to the Office's failure to issue the patent within 3 years of the filing date, the application for patent term adjustment under 37 CFR 1.705(b) is **DISMISSED as PREMATURE**.

Because the correction of the adjustment will not result in a change in Patent Term Adjustment (PTA) determination at the time of the mailing of the Notice of Allowance, the correct Patent Term Adjustment at the time of the mailing of the Notice of Allowance remains zero (0) days (adjustments totaling 318 days less reductions totaling 445 days). A copy of the updated PAIR screen, showing the correct determination, is enclosed.

BACKGROUND

The application was filed on April 4, 2003. On July 20, 2009, the Office mailed the Determination of Patent Term Adjustment under 35 U.S.C. 154(b) in the above-identified application. The Notice stated that the patent term adjustment (PTA) to date is zero (0) days.

On October 15, 2009, applicant timely submitted the present request for review of patent term adjustment[1]. Applicants do not dispute the adjustment to date of 318 days. Further, applicants do not dispute the reductions to date of 152 days; 60; 60 days; 56 days and 18 days attributed to Applicant pursuant to 37 CFR 1.704(b).

Applicants also correctly note the reduction of the patent term of 99 days pursuant to 37 CFR 1.704(c)(8), for filing an Information Disclosure Statement ("IDS") on May 8, 2009, after filing a reply to the non-final Office action on January 19, 2009. Applicants note the period of delay pursuant to 37 CFR 1.704(c)(8), as the number of days beginning on the day after the date the reply was filed, January 30, 2009, and ending on the date that the IDS was filed, May 8, 2009. Applicants, however, assert an entitlement to a period of adjustment of 156 days of Office delay pursuant to 37 CFR 1.702(a)(2), for failing to mail an action under 35 U.S.C. 132 not later than four months after a reply under 35 U.S.C. 111 was filed.

In this regard, applicants provide that on December 19, 2005, Applicants filed a reply under 35 U.S.C. 111, including a response to a non-final Office action. On March 6, 2006, this Office mailed a final Office action. On September 11, 2009, the Office mailed a subsequent final Office action in response to Applicant's December 19, 2005 reply, withdrawing the previous final Office action. Applicants assert an entitlement to 145 days of patent term adjustment in connection with the mailing of the subsequent final Office action, asserting that the Office failed to mail an action under 35 U.S.C. 132 not later than four months after the date of applicants reply under 35 [U.S.C.] 111 of December 19, 2005.

OPINION

Applicants' argument is not persuasive. On March 6, 2006, the Office issued an action as a result of the examination conducted pursuant to 35 U.S.C. 131. The subsequent action in this case does not negate the fact that a first Office action was mailed on March 6, 2006. Accordingly, the period of examination delay was properly calculated based on the March 6, 2006 date.

A further review of Office records reveals that the Office errantly assessed a reduction of 152 days in connection with the reply to the Notice to File Missing Parts of Nonprovisional Application, mailed May 27, 2003. Applicant filed a reply to the Notice on October 27, 2003. The reduction, 61 days pursuant to 37 CFR 1.704(b), began August 28, 2003, and on the day after the date that is three months after the date of mailing of the Notice, and ended October 27, 2003, the date the reply was filed. The Office thereafter mailed a Notice to Comply with Requirements for Patent Applications Containing Nucleotide Sequence and/or Amino Acid

[1] Office records show that the Issue Fee payment was received in the Office on October 15, 2009.

Sequence Dislosures ("Notice"), mailed November 24, 2003. Applicant filed a timely reply to the Notice on January 24, 2003.

A review of Office records also reveals that the Office errantly failed to assess a reduction of 89 days in connection with the Response to Notice of Non-Compliant Amendment filed May 9, 2007. Applicant filed an Amendment in response to a final Office action on February 9, 2009, however, the Amendment was non-compliant. Applicant was so notified in a Notice of Non-Compliant Amendment mailed May 1, 2007. Applicant filed an Amendment in response to the Notice of Non-Compliant Amendment, on May 9, 2007. Pursuant to 37 CFR § 1.704(c)(7) the patent term adjustment should have been reduced by eighty-nine (89) days for applicant delay, from February 10, 2007, to May 9, 2007, in filing a proper reply to the final rejection.

With regard to the argument under 37 CFR 1.702(b), knowledge of the actual date the patent issues is required to calculate the amount, if any, of additional patent term patentee is entitled to for Office failure to issue the patent within 3 years. See § 1.702(b). (This is true even where a request for continued examination (RCE) was filed). The computer will not undertake the § 1.702(b) calculation until the actual date of issuance of the patent has been determined. Likewise, the computer will not calculate any further Office delay under § 1.702(a)(4) or applicant delay under § 1.704(c)(10) until the actual date of issuance of the patent has been determined. As such, the Office can not make a determination on the correctness of the patent term adjustment until the patent has issued.

Requesting reconsideration of the patent term adjustment to be indicated on the patent under 37 CFR 1.705(b) based on the initial determination of patent term adjustment and a projected issuance date of the patent (or even the filing date of the request for continued examination) is premature. Accordingly, it is appropriate to dismiss as premature such a request.

Rather than file an application for patent term adjustment under 37 CFR 1.705(b) contesting the 37 CFR 1.702(b) calculation at the time of the mailing of the notice of allowance, applicant is advised that they may wait until the time of the issuance of the patent and file a request for reconsideration of the patent term adjustment pursuant to 37 CFR 1.705(d). As the USPTO does not calculate the amount of time earned pursuant to 37 CFR 1.702(b) until the time of the issuance of the patent, the Office will consider any request for reconsideration of the patent term adjustment due to an error in the calculation of 37 CFR 1.702(b) to be timely if the request for reconsideration is filed within two months of the issuance of the patent. However, as to all other bases for contesting the initial determination of patent term adjustment received with the notice of allowance, applicant must timely file an application for patent term adjustment prior to the payment of the issue fee[2].

---

[2] For example, if applicant disputes both the calculation of patent term adjustment under 37 CFR 1.702(a)(1) for Office failure to mail a first Office action or notice of allowance not later than fourteen months after the date on which the application was filed and under 37 CFR 1.702(b) for Office failure to issue a patent within three years of the actual filing date of the application, then applicant must still timely file an application for patent term adjustment prior to the payment of the issue fee to contest the calculation of Office delay in issuing a first Office action or notice of allowance. See 37 CFR 1.705(b) and 35 U.S.C. 154(b)(3)(B). A dispute as to the calculation of the §1.702(a)(1) period raised on request for reconsideration of patent term adjustment under 37 CFR 1.705(d) will be dismissed as untimely filed.

In view thereof, the correct Patent Term Adjustment at the time of the mailing of the Notice of Allowance is zero (0) days (adjustments totaling 318 days less reductions totaling 443 days (61 days + 60 days + 60 days + 89 days + 56 days + 18 days + 99 days).

The Office acknowledges submission of the $200.00 fee set forth in 37 CFR 1.18(e) for consideration of the application for patent term adjustment under 37 CFR 1.705(b).

Any request for reconsideration of the patent term adjustment indicated on the patent must be timely filed within 2 months after issuance pursuant to 37 CFR 1.705(d) and must include payment of the required fee under 37 CFR 1.18(e).

The Office of Data Management has been advised of this decision. This application is being referred to the Office of Data Management for issuance of the patent.

Telephone inquiries specific to this matter should be directed to Attorney Derek Woods at (571) 272-3232.

Anthony Knight
Director
Office of Petitions

PALM INTRANET

Day : Saturday
Date: 5/8/2010
Time: 21:05:53

PTA Calculations for Application: 10/407807			
Application Filing Date:	04/04/2003	PTO Delay (PTO):	318
Issue Date of Patent:		Three Years:	0
Pre-Issue Petitions:	0	Applicant Delay (APPL):	346
Post-Issue Petitions:	0	Total PTA (days):	0
PTO Delay Adjustment:	-97		

File Contents History

Number	Date	Contents Description	PTO	APPL	START
145	05/08/2010	ADJUSTMENT OF PTA CALCULATION BY PTO		97	
121	07/20/2009	MAIL NOTICE OF ALLOWANCE			
120	07/16/2009	NOTICE OF ALLOWANCE DATA VERIFICATION COMPLETED			
119	07/16/2009	CASE DOCKETED TO EXAMINER IN GAU			
118	07/16/2009	ISSUE REVISION COMPLETED			
117	07/16/2009	DOCUMENT VERIFICATION			
116	07/06/2009	NOTICE OF ALLOWABILITY			
115	06/25/2009	PARALEGAL TD ACCEPTED			
114	06/12/2009	DATE FORWARDED TO EXAMINER			
113	06/11/2009	AMENDMENT AFTER FINAL REJECTION			
112	06/11/2009	TERMINAL DISCLAIMER FILED			
111	06/02/2009	MAIL EXAMINER INTERVIEW SUMMARY (PTOL - 413)			
110	06/01/2009	EXAMINER INTERVIEW SUMMARY RECORD (PTOL - 413)			
109	05/21/2009	MAIL FINAL REJECTION (PTOL - 326)			
108	05/21/2009	FINAL REJECTION			
107	10/30/2008	INFORMATION DISCLOSURE STATEMENT CONSIDERED			
106	01/29/2009	INFORMATION DISCLOSURE STATEMENT CONSIDERED			
105	05/08/2009	INFORMATION DISCLOSURE STATEMENT CONSIDERED			
104	05/08/2009	INFORMATION DISCLOSURE STATEMENT (IDS) FILED			
103	10/30/2008	REFERENCE CAPTURE ON IDS			
102	10/30/2008	INFORMATION DISCLOSURE STATEMENT (IDS) FILED			

101	01/29/2009	REFERENCE CAPTURE ON IDS			
100	01/29/2009	INFORMATION DISCLOSURE STATEMENT (IDS) FILED		0	98
99	03/10/2009	DATE FORWARDED TO EXAMINER			
98	01/29/2009	RESPONSE AFTER NON-FINAL ACTION			
97	01/29/2009	INFORMATION DISCLOSURE STATEMENT (IDS) FILED			
96	10/30/2008	INFORMATION DISCLOSURE STATEMENT (IDS) FILED			
95	10/30/2008	MAIL NON-FINAL REJECTION			
94	10/27/2008	NON-FINAL REJECTION			
93	08/01/2008	INFORMATION DISCLOSURE STATEMENT CONSIDERED			
92	08/01/2008	REFERENCE CAPTURE ON IDS			
91	08/01/2008	INFORMATION DISCLOSURE STATEMENT (IDS) FILED		0	87
90	08/20/2008	DATE FORWARDED TO EXAMINER			
89	08/01/2008	AMENDMENT SUBMITTED/ENTERED WITH FILING OF CPA/RCE			
88	08/20/2008	DATE FORWARDED TO EXAMINER			
87	08/01/2008	REQUEST FOR CONTINUED EXAMINATION (RCE)		18	72
86	08/20/2008	DISPOSAL FOR A RCE / CPA / R129			
85	08/01/2008	REQUEST FOR EXTENSION OF TIME - GRANTED			
84	08/01/2008	INFORMATION DISCLOSURE STATEMENT (IDS) FILED			
82	08/01/2008	WORKFLOW - REQUEST FOR RCE - BEGIN			
81	07/02/2008	MAIL EXAMINER INTERVIEW SUMMARY (PTOL - 413)			
80	06/26/2006	EXAMINER INTERVIEW SUMMARY RECORD (PTOL - 413)			
79	06/23/2008	MAIL ADVISORY ACTION (PTOL - 303)			
78	06/19/2008	ADVISORY ACTION (PTOL-303)			
77	06/16/2008	DATE FORWARDED TO EXAMINER			
76	06/09/2008	AMENDMENT AFTER FINAL REJECTION			
75	06/04/2008	MAIL EXAMINER INTERVIEW SUMMARY (PTOL - 413)			
74	05/30/2008	EXAMINER INTERVIEW SUMMARY RECORD (PTOL - 413)			
		EXAMINER INTERVIEW SUMMARY RECORD			

73	05/30/2008	(PTOL - 413)			
72	04/14/2008	MAIL FINAL REJECTION (PTOL - 326)			
71	04/11/2008	FINAL REJECTION			
70	03/13/2008	CHANGE IN POWER OF ATTORNEY (MAY INCLUDE ASSOCIATE POA)			
69	03/12/2008	CORRESPONDENCE ADDRESS CHANGE			
68	02/07/2008	DATE FORWARDED TO EXAMINER			
67	12/21/2007	RESPONSE AFTER NON-FINAL ACTION		56	65
66	12/21/2007	REQUEST FOR EXTENSION OF TIME - GRANTED			
65	07/26/2007	MAIL NON-FINAL REJECTION			
64	07/23/2007	NON-FINAL REJECTION			
63	05/18/2007	DATE FORWARDED TO EXAMINER			
62	05/09/2007	RESPONSE AFTER NON-FINAL ACTION			
61	05/01/2007	MAIL NOTICE OF INFORMAL OR NON-RESPONSIVE RCE AMENDMENT			
60	04/30/2007	NOTICE OF INFORMAL OR NON-RESPONSIVE RCE AMENDMENT.			
59	02/20/2007	DATE FORWARDED TO EXAMINER			
58	02/09/2007	AMENDMENT SUBMITTED/ENTERED WITH FILING OF CPA/RCE			
57	02/20/2007	DATE FORWARDED TO EXAMINER			
56	02/09/2007	REQUEST FOR CONTINUED EXAMINATION (RCE)		60	50
55	02/20/2007	DISPOSAL FOR A RCE / CPA / R129			
54	02/09/2007	REQUEST FOR EXTENSION OF TIME - GRANTED			
53	05/16/2006	CORRECTED FILING RECEIPT			
52	02/09/2007	WORKFLOW - REQUEST FOR RCE - BEGIN			
51	09/11/2006	MAIL NOTICE OF WITHDRAWN ACTION			
50	09/11/2006	MAIL FINAL REJECTION (PTOL - 326)			
49	09/11/2006	MAIL EXAMINER INTERVIEW SUMMARY (PTOL - 413)			
48	09/05/2006	EXAMINER INTERVIEW SUMMARY RECORD (PTOL - 413)			
47	09/05/2006	FINAL REJECTION			
46	09/05/2006	LETTER WITHDRAWING / VACATING OFFICE ACTION			
45	08/03/2006	CORRESPONDENCE ADDRESS CHANGE			
		A STATEMENT BY ONE OR MORE INVENTORS			

44	04/04/2003	SATISFYING THE REQUIREMENT UNDER 35 USC 115, OATH OF THE APPLIC			
43	04/04/2003	PAYMENT OF ADDITIONAL FILING FEE/PREEXAM			
41	03/06/2006	MAIL FINAL REJECTION (PTOL - 326)			
40	03/03/2006	FINAL REJECTION			
39	12/19/2005	INFORMATION DISCLOSURE STATEMENT CONSIDERED			
38	02/02/2006	CASE DOCKETED TO EXAMINER IN GAU			
37.7	12/19/2005	INFORMATION DISCLOSURE STATEMENT (IDS) FILED		0	35
37	12/19/2005	INFORMATION DISCLOSURE STATEMENT (IDS) FILED			
36	01/03/2006	DATE FORWARDED TO EXAMINER			
35	12/19/2005	RESPONSE AFTER NON-FINAL ACTION		60	33
34	12/19/2005	REQUEST FOR EXTENSION OF TIME - GRANTED			
33	07/20/2005	MAIL NON-FINAL REJECTION			
32	07/19/2005	NON-FINAL REJECTION			
31	06/24/2005	DATE FORWARDED TO EXAMINER			
30	06/20/2005	RESPONSE TO ELECTION / RESTRICTION FILED			
29	06/20/2005	REQUEST FOR EXTENSION OF TIME - GRANTED			
28	04/18/2005	MAIL RESTRICTION REQUIREMENT	318		-1
27	04/15/2005	REQUIREMENT FOR RESTRICTION / ELECTION			
26	02/03/2005	CASE DOCKETED TO EXAMINER IN GAU			
25	01/05/2005	IFW TSS PROCESSING BY TECH CENTER COMPLETE			
24	01/28/2004	PRELIMINARY AMENDMENT			
23	01/04/2005	CASE DOCKETED TO EXAMINER IN GAU			
22.7	09/16/2004	INFORMATION DISCLOSURE STATEMENT (IDS) FILED			
22	09/16/2004	INFORMATION DISCLOSURE STATEMENT (IDS) FILED			
21.7	05/06/2004	INFORMATION DISCLOSURE STATEMENT (IDS) FILED			
21	05/06/2004	INFORMATION DISCLOSURE STATEMENT (IDS) FILED			
20	02/10/2004	APPLICATION DISPATCHED FROM OIPE			
19	02/10/2004	APPLICATION IS NOW COMPLETE			

18	01/26/2004	ADDITIONAL APPLICATION FILING FEES		152	5
17	01/26/2004	A SET OF SYMBOLS AND PROCEDURES, PROVIDED TO THE PTO ON A SET OF COMPUTER LISTINGS, THAT DESCRIBE IN			
16	02/06/2004	CRF IS GOOD TECHNICALLY / ENTERED INTO DATABASE			
15	11/24/2003	SEQUENCE ERRORS			
7	04/04/2003	CLAIM PRELIMINARY AMENDMENT			
5	05/27/2003	NOTICE MAILED--APPLICATION INCOMPLETE--FILING DATE ASSIGNED			
4	05/12/2003	CLEARED BY L&R (LARS)			
3	05/10/2003	IFW SCAN & PACR AUTO SECURITY REVIEW			
2	04/28/2003	IFW SCAN & PACR AUTO SECURITY REVIEW			
1	04/04/2003	INITIAL EXAM TEAM NN			

Search Another: Application# Search

EXPLANATION OF PTA CALCULATION

EXPLANATION OF PTE CALCULATION

To go back, right click here and select Back. To go forward, right click here and select Forward. To refresh, right click here and select Refresh.

Back to OASIS | Home page

UNITED STATES PATENT AND TRADEMARK OFFICE

COMMISSIONER FOR PATENTS
UNITED STATES PATENT AND TRADEMARK OFFICE
P.O. BOX 1450
ALEXANDRIA, VA 22313-1450
www.uspto.gov

HITT GAINES P.C.
P.O. BOX 832570
RICHARDSON TX 75083

COPY MAILED

OCT 2 4 2007

OFFICE OF PETITIONS

In re Application of	:	
Davies et al.	:	
Application No. 10/407814	:	DECISION ON PETITION
Filed: 04/03/2003	:	UNDER 37 CFR 1.78(a)(3)
Attorney Docket No. U4EA-0006	:	

This is a decision on the petition under 37 CFR 1.78(a)(3), filed on 12 September, 2007, to accept an unintentionally delayed claim under 35 U.S.C. §§ 120 and 365(c) for the benefit of priority to a prior-filed PCT application.

A petition for acceptance of a claim for late priority under 37 CFR 1.78(a)(3) is only applicable to those applications filed on or after November 29, 2000. Further, the petition is appropriate only after the expiration of the period specified in 37 CFR 1.78(a)(2)(ii). In addition, the petition under 37 CFR 1.78(a)(3) must be accompanied by:

(1) the reference required by 35 U.S.C. § 120 and 37 CFR 1.78(a)(2)(i) of the prior-filed application, unless previously submitted;
(2) the surcharge set forth in § 1.17(t); and
(3) a statement that the entire delay between the date the claim was due under 37 CFR 1.78(a)(2)(ii) and the date the claim was filed was unintentional. The Director may require additional information where there is a question whether the delay was unintentional.

The petition does not comply with item (1)

At the outset, it is noted that petitioners refer to the subject application as the National Stage of the prior-filed international application. This application is not a national stage of a prior-filed international application, however, and it is inappropriate to refer the subject application as the national stage of a prior-filed international application. Rather, petitioners must provide the relationship (*i.e.*, continuation, divisional, or continuation-in-part) between the subject application and any prior-filed application.

37 CFR 1.78(a)(2)(i) requires that any nonprovisional application claiming the benefit of one or more prior-filed copending nonprovisional applications must contain or be amended to contain a reference to each such prior-filed application, identifying it by application number (consisting of the series code and serial number) and indicating the relationship of the applications. The relationship between the applications is whether the subject application is a continuation, divisional, or continuation-in-part of a prior-filed nonprovisional application. An example of a proper benefit claim is: "This application is a continuation of Application No. 10/---, filed---." A benefit claim that merely states: "This application claims the benefit of Application No. 10/---, filed---," does not comply with 37 CFR 1.78(a)(2)(i) since the proper relationship, which includes the type of continuing application, is not stated. Also, the status of each nonprovisional parent application (if it is patented or abandoned) should also be indicated, following the filing date of the parent nonprovisional application. *See* MPEP Section 201.11, Reference to Prior Nonprovisional Applications.

To obtain benefit under 35 U.S.C. §§ 120 and 365(c) of a prior international application designating the U.S., the continuing application must:

(A) include a specific reference to the prior international application (either in the application data sheet (37 CFR 1.76) or in the first sentence(s) of the specification),
(B) be copending with the prior international application, and
(C) have at least one inventor in common with the prior international application.

With regard to (A), the specific reference to the international application required under 35 U.S.C. 120 and 365(c) must either be contained in the first sentence(s) of the specification following the title or included in an application data sheet. 37 CFR 1.78(a)(2)(iii). The specific reference must identify the parent international application by international application number and international filing date and indicate the relationship of the applications (i.e., continuation, continuation-in-part, or division). See 37 CFR 1.78(a)(2)(i)) and MPEP § 201.11. An example of an appropriate first sentence of the specification is, for example, "This is a continuation of International Application PCT/EP2004/000000, with an international filing date of January 5, 2004, now abandoned."

Petitioners have not filed an amendment in compliance with the provisions of 37 CFR 1.78(a)(2)(i). Accordingly, the petition must be dismissed.

Before the petition under 37 CFR § 1.78(a)(3) can be granted, a renewed petition under 37 CFR § 1.78(a)(3) a supplemental Application Data Sheet (ADS) or a substitute amendment (complying with 37 CFR 1.121 and 37 CFR 1.76(b)(5)), which states the relationship of the prior-filed application to this application, are required.

Further to this point, petitioners are reminded, when submitting an amendment, that an incorporation by reference statement added after an application's filing date is not effective because no new matter can be added to an application after its filing date (*see* 35 U.S.C. §

132(a)). If an incorporation by reference statement is included in an amendment to the specification to add a benefit claim under 35 U.S.C. § 120 after the filing date of the application, the amendment would not be proper. When a benefit claim under 35 U.S.C. § 120 is submitted after the filing of an application, the reference to the prior application cannot include an incorporation by reference statement of the prior application. *See* Dart Industries v. Banner, 636 F.2d 684, 207 USPQ 273 (C.A.D.C. 1980). *Note* MPEP §§ 201.06(c) and 608.04(b).

Further correspondence with respect to this matter should be addressed as follows:

By mail: Mail Stop PETITIONS
Commissioner for Patents
Post Office Box 1450
Alexandria, VA 22313-1450

By hand: Customer Service Window
Mail Stop Petitions
Randolph Building
401 Dulany Street
Alexandria, VA 22314

By fax: (571) 273-8300
ATTN: Office of Petitions

Any questions concerning this matter may be directed to Senior Petitions Attorney Douglas I. Wood at (571) 272-3231.

Christina Tartera Donnell

Christina Tartera Donnell
Senior Petitions Attorney
Office of Petitions

UNITED STATES PATENT AND TRADEMARK OFFICE

Commissioner for Patents
United States Patent and Trademark Office
P.O. Box 1450
Alexandria, VA 22313-1450
www.uspto.gov

HITT GAINES P.C.
P.O. BOX 832570
RICHARDSON TX 75083

COPY MAILED

DEC 11 2007

OFFICE OF PETITIONS

In re Application of	:	
Davies et al.	:	
Application No. 10/407814	:	DECISION ON PETITION
Filed: 04/03/2003	:	UNDER 37 CFR 1.78(a)(3)
Attorney Docket No. U4EA-0006	:	

This is a decision on the renewed petition under 37 CFR 1.78(a)(3), filed on November 7, 2007, to accept an unintentionally delayed claim under 35 U.S.C. §§ 120 and 365(c) for the benefit of priority to prior-filed international Application No. PCT/GB00/03790, filed on October 3, 2000, as set forth in the accompanying amendment.

The petition is **GRANTED.**

A petition for acceptance of a claim for late priority under 37 CFR 1.78(a)(3) is only applicable to those applications filed on or after November 29, 2000. Further, the petition is appropriate only after the expiration of the period specified in 37 CFR 1.78(a)(2)(ii). In addition, the petition under 37 CFR 1.78(a)(3) must be accompanied by:

(1) the reference required by 35 U.S.C. § 120 and 37 CFR 1.78(a)(2)(i) of the prior-filed application, unless previously submitted;
(2) the surcharge set forth in § 1.17(t); and
(3) a statement that the entire delay between the date the claim was due under 37 CFR 1.78(a)(2)(ii) and the date the claim was filed was unintentional. The Director may require additional information where there is a question whether the delay was unintentional.

All of the above requirements having been satisfied, the late claim for priority under 35 U.S.C. §§ 120 and 365(c) is accepted as being unintentionally delayed.

The granting of the petition to accept the delayed benefit claim to the prior-filed application under 37 CFR 1.78(a)(3) should not be construed as meaning that the application is entitled to the benefit of the prior-filed application. In order for the application to be entitled to the

benefit of the prior-filed application, all other requirements under 35 U.S.C. §§ 120 and 365(c) and 37 CFR 1.78(a)(1) and (a)(2) must be met. Similarly, the fact that the corrected Filing Receipt accompanying this decision on petition includes the prior-filed application should not be construed as meaning that applicant is entitled to the claim for benefit of priority to the prior-filed application noted thereon. Accordingly, the examiner will, in due course, consider this benefit claim and determine whether the application is entitled to the benefit of the earlier filing date.

A corrected Filing Receipt, which includes the priority claim to the prior-filed application, accompanies this decision on petition.

Any inquiries concerning this decision may be directed to Senior Petitions Attorney Douglas I. Wood at (571) 272-3231. All other inquiries concerning either the examination procedures or status of the application should be directed to the Technology Center.

This application is being forwarded to the examiner of Technology Center Art Unit 2616 for consideration of applicant's entitlement to claim benefit of priority under 35 U.S.C. §§ 120 and 365(c) to the above-noted, prior-filed PCT application.

Anthony Knight
Supervisor
Office of Petitions

ATTACHMENT: Corrected Filing Receipt

UNITED STATES PATENT AND TRADEMARK OFFICE

UNITED STATES DEPARTMENT OF COMMERCE
United States Patent and Trademark Office
Address: COMMISSIONER FOR PATENTS
P.O. Box 1450
Alexandria, Virginia 22313-1450
www.uspto.gov

APPLICATION NUMBER	FILING or 371(c) DATE	GRP ART UNIT	FIL FEE REC'D	ATTY.DOCKET.NO	TOT CLAIMS	IND CLAIMS
10/407,814	04/03/2003	2616	440	U4EA-0006	20	3

CONFIRMATION NO. 1145

CORRECTED FILING RECEIPT

27964
HITT GAINES P.C.
P.O. BOX 832570
RICHARDSON, TX 75083

OC000000027114792

Date Mailed: 12/11/2007

Receipt is acknowledged of this non-provisional patent application. The application will be taken up for examination in due course. Applicant will be notified as to the results of the examination. Any correspondence concerning the application must include the following identification information: the U.S. APPLICATION NUMBER, FILING DATE, NAME OF APPLICANT, and TITLE OF INVENTION. Fees transmitted by check or draft are subject to collection. Please verify the accuracy of the data presented on this receipt. **If an error is noted on this Filing Receipt, please write to the Office of Initial Patent Examination's Filing Receipt Corrections. Please provide a copy of this Filing Receipt with the changes noted thereon. If you received a "Notice to File Missing Parts" for this application, please submit any corrections to this Filing Receipt with your reply to the Notice. When the USPTO processes the reply to the Notice, the USPTO will generate another Filing Receipt incorporating the requested corrections**

Applicant(s)

Neil James Davies, Bristol, UNITED KINGDOM;
Judith Yvonne Holyer, Bristol, UNITED KINGDOM;
Laura Anne Lafave, Bristol, UNITED KINGDOM;
Peter William Thompson, Bristol, UNITED KINGDOM;
Christopher James Vowden, Bristol, UNITED KINGDOM;
Graham Willmott, Bristol, UNITED KINGDOM;

Assignment For Published Patent Application

U4EA Technologies Limited, London, UNITED KINGDOM

Power of Attorney:

M Cheairs--20382	Richard Krobusek--44851
David Hitt--33182	Greg Parker--44995
Charles Gaines--36804	Mark Kelley--45857
Jimmy Heisz--38914	Ronald Corbett--47500
Glenn Boisbrun--39615	James Justiss--48981

Domestic Priority data as claimed by applicant

This application is a CON of PCT/GB00/03790 10/03/2000

Foreign Applications

If Required, Foreign Filing License Granted: 06/03/2003

The country code and number of your priority application, to be used for filing abroad under the Paris Convention, is **US 10/407,814**

Projected Publication Date: Not Applicable

Non-Publication Request: No

Early Publication Request: No
**** SMALL ENTITY ****
Title

Prioritizing data with flow control

Preliminary Class

370

PROTECTING YOUR INVENTION OUTSIDE THE UNITED STATES

Since the rights granted by a U.S. patent extend only throughout the territory of the United States and have no effect in a foreign country, an inventor who wishes patent protection in another country must apply for a patent in a specific country or in regional patent offices. Applicants may wish to consider the filing of an international application under the Patent Cooperation Treaty (PCT). An international (PCT) application generally has the same effect as a regular national patent application in each PCT-member country. The PCT process **simplifies** the filing of patent applications on the same invention in member countries, but **does not result** in a grant of "an international patent" and does not eliminate the need of applicants to file additional documents and fees in countries where patent protection is desired.

Almost every country has its own patent law, and a person desiring a patent in a particular country must make an application for patent in that country in accordance with its particular laws. Since the laws of many countries differ in various respects from the patent law of the United States, applicants are advised to seek guidance from specific foreign countries to ensure that patent rights are not lost prematurely.

Applicants also are advised that in the case of inventions made in the United States, the Director of the USPTO must issue a license before applicants can apply for a patent in a foreign country. The filing of a U.S. patent application serves as a request for a foreign filing license. The application's filing receipt contains further information and guidance as to the status of applicant's license for foreign filing.

Applicants may wish to consult the USPTO booklet, "General Information Concerning Patents" (specifically, the section entitled "Treaties and Foreign Patents") for more information on timeframes and deadlines for filing foreign patent applications. The guide is available either by contacting the USPTO Contact Center at 800-786-9199, or it can be viewed on the USPTO website at http://www.uspto.gov/web/offices/pac/doc/general/index.html.

For information on preventing theft of your intellectual property (patents, trademarks and copyrights), you may wish to consult the U.S. Government website, http://www.stopfakes.gov. Part of a Department of Commerce initiative, this website includes self-help "toolkits" giving innovators guidance on how to protect intellectual property in specific countries such as China, Korea and Mexico. For questions regarding patent enforcement issues, applicants may call the U.S. Government hotline at 1-866-999-HALT (1-866-999-4158).

LICENSE FOR FOREIGN FILING UNDER

Title 35, United States Code, Section 184

Title 37, Code of Federal Regulations, 5.11 & 5.15

GRANTED

The applicant has been granted a license under 35 U.S.C. 184, if the phrase "IF REQUIRED, FOREIGN FILING LICENSE GRANTED" followed by a date appears on this form. Such licenses are issued in all applications where the conditions for issuance of a license have been met, regardless of whether or not a license may be required as set forth in 37 CFR 5.15. The scope and limitations of this license are set forth in 37 CFR 5.15(a) unless an earlier license has been issued under 37 CFR 5.15(b). The license is subject to revocation upon written notification. The date indicated is the effective date of the license, unless an earlier license of similar scope has been granted under 37 CFR 5.13 or 5.14.

This license is to be retained by the licensee and may be used at any time on or after the effective date thereof unless it is revoked. This license is automatically transferred to any related applications(s) filed under 37 CFR 1.53(d). This license is not retroactive.

The grant of a license does not in any way lessen the responsibility of a licensee for the security of the subject matter as imposed by any Government contract or the provisions of existing laws relating to espionage and the national security or the export of technical data. Licensees should apprise themselves of current regulations especially with respect to certain countries, of other agencies, particularly the Office of Defense Trade Controls, Department of State (with respect to Arms, Munitions and Implements of War (22 CFR 121-128)); the Bureau of Industry and Security, Department of Commerce (15 CFR parts 730-774); the Office of Foreign AssetsControl, Department of Treasury (31 CFR Parts 500+) and the Department of Energy.

NOT GRANTED

No license under 35 U.S.C. 184 has been granted at this time, if the phrase "IF REQUIRED, FOREIGN FILING LICENSE GRANTED" DOES NOT appear on this form. Applicant may still petition for a license under 37 CFR 5.12, if a license is desired before the expiration of 6 months from the filing date of the application. If 6 months has lapsed from the filing date of this application and the licensee has not received any indication of a secrecy order under 35 U.S.C. 181, the licensee may foreign file the application pursuant to 37 CFR 5.15(b).

SPE RESPONSE FOR CERTIFICATE OF CORRECTION

Paper No.: _____

DATE : February 13 2007

TO SPE OF : ART UNIT 2818

SUBJECT : Request for Certificate of Correction for Appl. No.: 10/407820 patent No.: 6897474

Please respond to this request for a certificate of correction within 7 days.

Please review the requested changes/corrections as shown in the **COCIN** document(s) in the IFW application image. No new matter should be introduced, nor should the scope or meaning of the claims be changed.

Please complete the response (see below) and forward the completed response to scanning using document code **COCX**.

Magdalene Talley

Certificates of Correction Branch

703-308-9390 ext. 116

Thank You For Your Assistance

The request for issuing the above-identified correction(s) is hereby:

Note your decision on the appropriate box.

- [x] **Approved** — **All** changes apply.
- [ ] **Approved in Part** — Specify below which changes **do not** apply.
- [ ] **Denied** — State the reasons for denial below.

Comments: _____

Steven Loke — SPE

2818 — Art Unit

UNITED STATES PATENT AND TRADEMARK OFFICE

Commissioner for Patents
United States Patent and Trademark Office
P.O. Box 1450
Alexandria, VA 22313-1450
www.uspto.gov

COPY MAILED

MAY 3 1 2007

OFFICE OF PETITIONS

FULBRIGHT & JAWORSKI L.L.P.
600 CONGRESS AVE.
SUITE 2400
AUSTIN, TX 78701

In re Application of	:	
IDELL, Steven	:	
Application No. 10/407,821	:	DECISION ON PETITION
Filed: April 04, 2003	:	TO WITHDRAW
Attorney Docket No. **IDELL=1A**	:	FROM RECORD
	:	

This is a decision on the Request to Withdraw as attorney or agent of record under 37 C.F.R. § 1.36(b), filed February 19, 2007.

The request is **NOT APPROVED** as moot.

A review of the file record indicates that the power of attorney to Fulbright & Jaworski L.L.P. has been revoked by the assignee of the patent application on April 06, 2007. Accordingly, the request to withdraw under 37 C.F.R. § 1.36(b) is moot.

All future communications from the Office will continue to be directed to the below-listed address until otherwise notified by applicant.

Telephone inquires concerning this decision should be directed to Michelle R. Eason at 571-272-4231.

Terri Williams

Terri Williams
Petitions Examiner
Office of Petitions

cc: **BROWDY AND NEIMARK, P.L.L.C.**
624 NINTH STREET, NW
SUITE 300
WASHINGTON DC 20001-5303

UNITED STATES PATENT AND TRADEMARK OFFICE

Commissioner for Patents
United States Patent and Trademark Office
P.O. Box 1450
Alexandria, VA 22313-1450
www.uspto.gov

MICHAEL P. MORRIS
BOEHRINGER INGELHEIM CORPORATION
900 RIDGEBURY ROAD
P. O. BOX 368
RIDGEFIELD CT 06877-0368

COPY MAILED
NOV 14 2007
OFFICE OF PETITIONS

In re Application of	:	
Petrus A. van Rijn et al.	:	
Application No. 10/407,822	:	ON PETITION
Filed: April 4, 2003	:	
Attorney Docket No. 2183-5911US	:	

This is a decision on the petition under 37 CFR 1.137(b), filed October 3, 2007, to revive the above-identified application.

The petition is **GRANTED**.

The above-identified application became abandoned for failure to submit the issue fee in a timely manner in reply to the Notice of Allowance mailed June 14, 2007, which set a statutory period for reply of three (3) months. Accordingly, by operation of law, the above-identified application became abandoned on September 15, 2007.

The petition satisfies the conditions for revival pursuant to the provisions of 37 CFR 1.137(b) in that (1) the reply in the form of payment of the Issue Fee; (2) the petition fee of $1,540; and (3) the required statement of unintentional delay have been received. Accordingly, the Issue Fee payment is accepted as having been unintentionally delayed.

It is not apparent whether the person signing the statement of the unintentional delay was in a position to have firsthand knowledge of the facts and circumstances of the delay at issue. Nevertheless, such statement is being treated as having been made as the result of a reasonable inquiry into the facts and circumstances of such delay. See 37 CFR 10.18(b) and Changes to Patent Practice and Procedure; Final rule Notice, 62 Fed. Reg. 53131, 53178 (October 10, 1997), 1203 Off. Gaz. Pat. Office 63, 103 (October 21, 1997). In the event that such an inquiry has not been made, petitioner must make such an inquiry. If such inquiry results in the discovery that it is not correct that the entire delay in filing the required reply from the due date for the reply until the filing of a grantable petition pursuant of 37 CFR 1.137(b) was unintentional, petitioner must notify the Office.

The file does not indicate a change of address has been submitted, although the address given on the petition differs from the address of record. If appropriate, a change of address should be filed

in accordance with MPEP 601.03. A courtesy copy of this decision is being mailed to the address given on the petition; however, the office will mail all future correspondence solely to the address of record.

Telephone inquiries concerning this decision should be directed to Carl Friedman at (571) 272-6842.

The application file is being referred to the Office of Patent Publication.

David Bucci
Petitions Examiner
Office of Petitions

Cc: Tracey S. Truitt
800 W. 47th Street, Suite 401
Kansas City, Missouri 64112

UNITED STATES PATENT AND TRADEMARK OFFICE

COMMISSIONER FOR PATENTS
UNITED STATES PATENT AND TRADEMARK OFFICE
P.O. BOX 1450
ALEXANDRIA, VA 22313-1450
www.uspto.gov

Paper No.

Mark D. Kirkland
FISH & RICHARDSON
500 Arguello Street, Suite 500
Redwood City, CA 94063

MAILED

DEC 0 6 2004

Technology Center 2100

In re Application of:
Nir Zuk
Application No. 10/407,823
Filed: April 4, 2003
For: ATTACK DATABASE STRUCTURE

DECISION ON REQUEST TO WITHDRAW AS ATTORNEY OR AGENT

This is a decision on the Request To Withdraw from Representation filed July 9, 2004.

A grantable request to withdraw as attorney of record should indicate thereon the present mailing addresses of the attorney(s) who is/are withdrawing from the record and of the applicant. The request for withdrawal must be signed by every attorney seeking to withdraw or contain a clear indication that one attorney is signing on behalf of another/others. A request to withdraw will not be approved unless at least 30 (thirty) days would remain between the date of approval and the later of the expiration date of a time to file a response or the expiration date of the maximum time period which can be extended under 37 C.F.R. § 1. 136(a). The effective date of withdrawal being the date of decision and not the date of request. See M.P.E.P. § 402.06. 37 C.F.R. § 1.36 further requires that the applicant or patent owner be notified of the withdrawal of the attorney or agent.

The request filed July 9, 2004 meets all the requirements. Accordingly the request is **GRANTED**.

All future communications from the Office will be directed to the below-listed address until otherwise notified by applicant. This correspondence address is provided by the withdrawn attorney(s). Applicant is reminded of the obligation to promptly notify the Patent and Trademark Office (Office) of any change in correspondence address to ensure receipt of all communications from the Office.

James R. Matthews

for Vincent N. Trans
Special Program Examiner
Technology Center 2100
Computer Architecture, Software, and
Information Security
(571) 272-3613

cc: HARRITY & SNYDER, LLP
11240 Waples Mill Road
Suite 300
Fairfax, VA 22030

2 0 NOV 2007

UNITED STATES PATENT AND TRADEMARK OFFICE

Commissioner for Patents
United States Patent and Trademark Office
P.O. Box 1450
Alexandria, VA 22313-1450
www.uspto.gov

HITT GAINES P.C.
P.O. BOX 832570
RICHARDSON TX 75083

In re Application of	:
DAVIES, et al.	:
Application No. 10/407,910	: DECISION ON PETITION
Filed: April 3, 2003	: UNDER 37 CFR 1.78(a)(3)
Attorney Docket No. U4EA-0001	:

This is a decision on the petition under 37 CFR 1.78(a)(3), filed March 26, 2007, to accept an unintentionally delayed claim under 35 U.S.C. § 120 for the benefit of priority to the prior-filed nonprovisional applications set forth in the amendment filed with the petition.

The petition is **DISMISSED**.

A petition for acceptance of a claim for late priority under 37 CFR 1.78(a)(3) is only applicable to those applications filed on or after November 29, 2000. Further, the petition is appropriate only after the expiration of the period specified in 37 CFR 1.78(a)(2)(ii). In addition, the petition under 37 CFR 1.78(a)(3) must be accompanied by:

(1) the reference required by 35 U.S.C. § 120 and 37 CFR 1.78(a)(2)(i) of the prior-filed application, unless previously submitted;
(2) the surcharge set forth in § 1.17(t); and
(3) a statement that the entire delay between the date the claim was due under 37 CFR 1.78(a)(2)(ii) and the date the claim was filed was unintentional. The Commissioner may require additional information where there is a question whether the delay was unintentional.

The petition does not satisfy item (1) above.

The priority claim listed in the specification filed on April 03, 2003 identifies this application as a national phase of international application PCT/GB00/03785. However, this application is not a national phase application under 35 USC 371. Rather it is a filing under 35 USC 111(a). Applicant must provide the relationship between this application and any prior-filed application. The relationship between the applications is a statement of whether the subject application is a continuation, a divisional or a continuation-in-part of a prior-filed nonprovisional or international

application designating the U.S. In addition, for benefit claims to international applications, the statement must indicate the international filing date. Such statement should also identify the status of the parent application, indicating for example, whether it is abandoned or patented. See MPEP 201.11.

To obtain benefit under 35 USC 120 and 365(c) of a prior international application designating the United States, the continuing application must:

(A) include a specific reference to the prior international application (either in the application data sheet (37 CFR 1.76) or in the first sentence(s) of the specification),
(B) be copending with the prior international application, and
(C) have at least one inventor in common with the prior international application.

Before the petition under 37 CFR § 1.78(a)(3) can be granted, a renewed petition and either an Application Data Sheet (37 CFR 1.76(a)(5)) or a proper amendment (complying with the provisions of 37 CFR 1.121) to correct the above matters are required.

Further correspondence with respect to this matter should be addressed as follows:

By mail: Mail Stop PETITIONS
Commissioner for Patents
Post Office Box 1450
Alexandria, VA 22313-1450

By hand: Customer Service Window
Mail Stop Petitions
Randolph Building
401 Dulany Street
Alexandria, VA 22314

By fax: (571) 273-8300
ATTN: Office of Petitions

Any questions concerning this matter may be directed to Erin Thomson at (571) 272-3292.

/Boris Milef/

Boris Milef
Legal Examiner
Office of PCT Legal Administration

1 9 FEB 2008

UNITED STATES PATENT AND TRADEMARK OFFICE

Commissioner for Patents
United States Patent and Trademark Office
P.O. Box 1450
Alexandria, VA 22313-1450
www.uspto.gov

HITT GAINES P.C.
P.O. BOX 832570
RICHARDSON TX 75083

In re Application of	:
DAVIES, et al.	:
Application No. 10/407,910	: DECISION ON PETITION
Filed: April 3, 2003	: UNDER 37 CFR 1.78(a)(3)
Attorney Docket No. U4EA-0001	:

This is a decision on the petition under 37 CFR 1.78(a)(3), filed December 3, 2007, to accept an unintentionally delayed claim under 35 USC 365(c) and 35 U.S.C. § 120 for the benefit of priority to an international application, designating the United States, set forth in the amendment filed with the petition.

The petition is **GRANTED**.

A petition for acceptance of a claim for late priority under 37 CFR 1.78(a)(3) is only applicable to those applications filed on or after November 29, 2000. Further, the petition is appropriate only after the expiration of the period specified in 37 CFR 1.78(a)(2)(ii). In addition, the petition under 37 CFR 1.78(a)(3) must be accompanied by:

(1) the reference required by 35 U.S.C. § 120 and 37 CFR 1.78(a)(2)(i) of the prior-filed application, unless previously submitted;
(2) the surcharge set forth in § 1.17(t); and
(3) a statement that the entire delay between the date the claim was due under 37 CFR 1.78(a)(2)(ii) and the date the claim was filed was unintentional. The Commissioner may require additional information where there is a question whether the delay was unintentional.

The petition complies with the requirements for a grantable petition under 37 CFR 1.78(a)(3) in that (1) a reference to the prior-filed international application has been included in an amendment to the first sentence of the specification following the title, as provided by 37 CFR 1.78(a)(2)(iii); (2) the surcharge fee required by 37 CFR 1.17(t) has been submitted; and (3) the petition contains a proper statement of unintentional delay. Accordingly, having found that the instant petition for acceptance of an unintentionally delayed claim for the benefit of priority under 35 USC 365(c) and 35 U.S.C. § 120 to the prior-filed international application satisfies the conditions of 37 CFR 1.78(a)(3), the petition is granted.

The granting of the petition to accept the delayed benefit claim to the prior-filed application under 37 CFR 1.78(a)(3) should not be construed as meaning that this application is entitled to the benefit of the prior-filed application. In order for this application to be entitled to the benefit of the prior-filed applications, all other requirements under 35 U.S.C. § 120 and 37 CFR 1.78(a)(1) and (a)(2) must be met. Similarly, the fact that the corrected Filing Receipt accompanying this decision on petition includes the prior-filed application should not be construed as meaning that applicant is entitled to the claim for benefit of priority to the prior-filed application noted thereon. Accordingly, the examiner will, in due course, consider this benefit claim and determine whether this application is entitled to the benefit of the earlier filing date.

A corrected Filing Receipt, which includes the priority claim to the prior-filed nonprovisional applications, accompanies this decision on petition.

Any inquiries concerning this decision may be directed to the Erin Thomson at (571) 272-3292. All other inquiries concerning either the examination procedures or status of the application should be directed to the Technology Center.

This matter is being referred to Technology Center Art Unit 2141 for appropriate action on the amendment filed December 03, 2007, including consideration by the examiner of applicant's entitlement to claim benefit of priority under 35 USC 365(c) and 35 U.S.C. § 120 to the prior-filed international application.

Boris Milef
Legal Examiner
Office of PCT Legal Administration

UNITED STATES PATENT AND TRADEMARK OFFICE

COMMISSIONER FOR PATENTS
UNITED STATES PATENT AND TRADEMARK OFFICE
P.O. BOX 1450
ALEXANDRIA, VA 22313-1450
www.uspto.gov

APR 27 2004

Walter W. Duft
Suite 10
10255 Main Street
Clarence NY 14031

In re Application of	:	
Wilson Greatbach et al	:	
Serial No.: 10/407,916	:	DECISION ON PETITION
Filed: April 4, 2003	:	
For: Improved Hybrid Battery Power	:	
Source for Implantable Medical Use	:	

This is in response to applicants' petition filed December 5, 2003 to make the above-identified application special under the provisions of 37 CFR 1.102(c), based on the age of the applicant.

Applicant has satisfied the provisions set forth in M.P.E.P. 708.02, IV. Therefore the petition is **GRANTED**.

The application will be forwarded to the examiner for action on the merits commensurate with this decision.

Should there be any questions with regard to this letter please contact John Kittle by letter addressed to the Director, Technology Center 3700/2900, P.O. Box 1450 Alexandria, VA 22313-1450 or by telephone at (703) 308-0873 or by facsimile transmission at (703) 308-3139.

John E. Kittle

John E. Kittle
Director,
Technology Center 3700/2900

SPE RESPONSE FOR CERTIFICATE OF CORRECTION

Paper No.: —

DATE : 10/23/06

TO SPE OF : ART UNIT 3672

SUBJECT : Request for Certificate of Correction for Appl. No.: 10/407922 Patent No.: 7100711 B2

Please respond to this request for a certificate of correction within 7 days.

Please review the requested changes/corrections as shown in the **COCIN** document(s) in the IFW application image. No new matter should be introduced, nor should the scope or meaning of the claims be changed.

Please complete the response (see below) and forward the completed response to scanning using document code **COCX**.

Virginia Tolbert
Certificates of Correction Branch

703-308-9390 ext. 113

Thank You For Your Assistance

The request for issuing the above-identified correction(s) is hereby:
Note your decision on the appropriate box.

- ☒ **Approved** — **All** changes apply.
- ☐ **Approved in Part** — Specify below which changes **do not** apply.
- ☐ **Denied** — State the reasons for denial below.

Comments: _____

DAVID BAGNELL
SUPERVISORY PATENT EXAMINER
TECHNOLOGY CENTER 3600

SPE

3672
Art Unit

UNITED STATES PATENT AND TRADEMARK OFFICE

Commissioner for Patents
United States Patent and Trademark Office
P.O. Box 1450
Alexandria, VA 22313-1450
www.uspto.gov

FISH & RICHARDSON P.C.
P.O. BOX 1022
MINNEAPOLIS, MN 55440-1022-5000

COPY MAILED

MAR 3 1 2008

In re Application of	:	
ROSKIND, James A.	:	
Application No. 10/407,932	:	DECISION ON PETITION
Filed: April 07, 2003	:	TO WITHDRAW
Attorney Docket No. **06975-314002**	:	FROM RECORD
	:	

This is a decision on the Request to Withdraw as attorney or agent of record under 37 C.F.R. § 1.36(b), filed November 14, 2007.

The request is **APPROVED**.

A grantable request to withdraw as attorney/agent of record must be signed by every attorney/agent seeking to withdraw or contain a clear indication that one attorney is signing on behalf of another/others. A request to withdraw will not be approved unless at least 30 (thirty) days would remain between the date of approval and the later of the expiration date of a time to file a response or the expiration date of the maximum time period which can be extended under 37 C.F.R. § 1.136(a).

The request was signed by Babak Akhlaghi. Babak Akhlaghi has been withdrawn; all other attorneys remain of record.

The correspondence address of record remains unchanged.

Telephone inquiries concerning this decision should be directed to the undersigned at 571-272-4231.

Michelle R. Eason

Michelle R. Eason
Paralegal Specialist
Office of Petitions

UNITED STATES PATENT AND TRADEMARK OFFICE

Commissioner for Patents
United States Patent and Trademark Office
P.O. Box 1450
Alexandria, VA 22313-1450
www.uspto.gov

FISH & RICHARDSON P.C.
P.O. BOX 1022
MINNEAPOLIS MN 55440-1022

COPY MAILED

MAR 12 2008

OFFICE OF PETITIONS

In re Application of

ROSKIND, James A. et al.
Application No. 10/407,934
Filed: April 07, 2003
Attorney Docket No. **06975-315002**

DECISION ON PETITION
TO WITHDRAW
FROM RECORD

This is a decision on the Request to Withdraw as attorney or agent of record under 37 C.F.R. § 1.36(b), filed November 14, 2007.

The request is **APPROVED**.

A grantable request to withdraw as attorney/agent of record must be signed by every attorney/agent seeking to withdraw or contain a clear indication that one attorney is signing on behalf of another/others. A request to withdraw will not be approved unless at least 30 (thirty) days would remain between the date of approval and the later of the expiration date of a time to file a response or the expiration date of the maximum time period which can be extended under 37 C.F.R. § 1.136(a).

The request was signed by Babak Akhlaghi. Babak Akhlaghi has been withdrawn as attorneys or agents of record all other attorneys remain of record. The correspondence address of record remains unchanged.

Telephone inquiries concerning this decision should be directed to Tredelle Jackson at 571-272-2783.

Tredelle D. Jackson
Petitions Examiner
Office of Petitions

UNITED STATES PATENT AND TRADEMARK OFFICE

COMMISSIONER FOR PATENTS
UNITED STATES PATENT AND TRADEMARK OFFICE
P.O. BOX 1450
ALEXANDRIA, VA 22313-1450
www.uspto.gov

BARRY E. BRETSCHNEIDER
MORRISON & FOERSTER
1650 TYSONS BOULEVARD
SUITE 300
McLEAN, VA 22102

COPY MAILED

JAN 28 2004

OFFICE OF PETITIONS

In re Application of	:	
Helmut D. Link et al	:	
Application No. 10/407,946	:	NOTICE
Filed: April 7, 2003	:	
Attorney Docket No. 246472004700	:	

This is a notice regarding your request for acceptance of a fee deficiency submission under 37 CFR 1.28. On September 1, 1998, the Court of Appeals for the Federal Circuit held that 37 CFR 1.28(c) is the sole provision governing the time for correction of the erroneous payment of the issue fee as a small entity. **See DH Technology v. Synergystex International, Inc. 154 F.3d 1333, 47 USPQ2d 1865 (Fed. Cir. Sept. 1, 1998).**

The Office no longer investigates or rejects original or reissue applications under 37 CFR 1.56. **1098 Off. Gaz. Pat. Office 502 (January 3, 1989).** Therefore, nothing in this Notice is intended to imply that an investigation was done.

Your fee deficiency submission under 37 CFR 1.28 is hereby **ACCEPTED**.

Inquiries related to this communication should be directed to the Office of Petitions Staff at (703) 305-9285.

Wan Laymon
Petitions Examiner
Office of Petitions
Office of the Deputy Commissioner
for Patent Examination Policy

UNITED STATES PATENT AND TRADEMARK OFFICE

Commissioner for Patents
United States Patent and Trademark Office
P.O. Box 1450
Alexandria, VA 22313-1450
www.uspto.gov

COPY MAILED

MAY 04 2006

OFFICE OF PETITIONS

PATENT COUNSEL
APPLIED MATERIALS, INC.
LEGAL AFFAIRS DEPARTMENT
P.O. BOX 450A
SANTA CLARA CA 95052

In re Application of
Ho-Man Rodney Chiu et al. :
Application No. 10/407,953 : ON PETITION
Filed: April 4, 2003 :
Attorney Docket No. 6506P1/TCG/W-C/LE :

This is a decision on the petition under 37 CFR 1.137(b),[1] filed December 12, 2005, to revive the above identified application.

The petition is **GRANTED**.

This application became abandoned for failure to timely reply to the Final Office Action mailed May 23, 2005. A shortened statutory period of three months was set for replying Final Office Action. No extensions of time having been filed, the application became abandoned August 24, 2005. The instant petition and this decision precede the mailing of the Notice of Abandonment.

In response to the Final Office Action mailed May 23, 2005, petitioner has submitted a

---

[1]Effective December 1, 1997, the provisions of 37 CFR 1.137(b) now provide that where the delay in reply was unintentional, a petition may be filed to revive an abandoned application or a lapsed patent pursuant to 37 CFR 1.137(b). A grantable petition filed under the provisions of 37 CFR 1.137(b) must be accompanied by:

(1) the required reply, unless previously filed. In a nonprovisional application abandoned for failure to prosecute, the required reply may be met by the filing of a continuing application. In an application or patent, abandoned or lapsed for failure to pay the issue fee or any portion thereof, the required reply must be the payment of the issue fee or any outstanding balance thereof.

(2) the petition fee as set forth in 37 CFR 1.17(m);

(3) a statement that the entire delay in filing the required reply from the due date for the reply until the filing of a grantable petition pursuant to 37 CFR 1.137(b) was unintentional. The Commissioner may required additional information where there is a question whether the delay was unintentional; and

(4) any terminal disclaimer (and fee as set forth in 37 CFR 1.20(d)) required pursuant to 37 CFR 1.137(c)).

Request for Continued Examination (RCE) and an amendment as the submission required under 37 CFR 1.114.

This matter is being referred to Technology Center 1746 for processing of the RCE and submission.

Telephone inquiries related to this decision should be directed to the undersigned Petitions Attorney at (571) 272-3212.

Patricia Faison-Ball

Patricia Faison-Ball
Senior Petitions Attorney
Office of Petitions

UNITED STATES PATENT AND TRADEMARK OFFICE

Pet. Dec.

Commissioner for Patents
United States Patent and Trademark Office
P.O. Box 1450
Alexandria, VA 22313-1450
www.uspto.gov

NE

Mailed: 6/14/05

In re application of Tanzer et al. Serial No. 10/407,959 Filed: April 4, 2003 For: METHOD OF IMPROVING VISCOSITY STABILITY UPON ADDITION OF A COLORANT COMPONENT	: : : : : :	DECISION ON PETITION

This is a response to the PETITION TO WITHDRAW HOLDING OF ABANDONMENT filed February 25, 2005. The petition requests that the abandonment, as set forth in the Notice of Abandonment of February 16, 2005, for failure to timely file a proper reply to the Office letter mailed July 15, 2004 be withdrawn since the applicants did timely file a facsimile reply on October 15, 2004.

DECISION

The instant request has been accepted as a petition to withdraw the holding of abandonment under the provisions of 37 CFR 1.181 (no fee) - no abandonment-in-fact. A review of the evidence presented reveals that the petitioner timely filed a Response to the Office Action by facsimile on October 15, 2004. The evidenced provided includes an Auto-Reply Facsimile Transmission dated on October 15, 2004, and a completed Certificate of Facsimile Transmission. Accordingly, any holding of abandonment for failure to timely file a proper reply to the Office letter mailed July 15, 2004 is hereby vacated, and the application is returned to pending status.

The application shall be forwarded to the examiner for entry, processing and consideration of the reply originally filed October 15, 2004.

The Petition is **GRANTED**.

Jacqueline Stone, Director
Technology Center 1700
Chemical and Materials Engineering

ROHM AND HASS COMPANY
PATENT DEPARTMENT
100 INDEPENDENCE MALL WEST
PHILADELPHIA, PA 19106-2399

UNITED STATES PATENT AND TRADEMARK OFFICE

COMMISSIONER FOR PATENTS
UNITED STATES PATENT AND TRADEMARK OFFICE
P.O. BOX 1450
ALEXANDRIA, VA 22313-1450
www.uspto.gov

Paper No. 8

ATTN: PATENT DEPARTMENT
KYOCERA CORP.
PO BOX 928289
SAN DIEGO, CA 92192-8289

COPY MAILED
MAY 10 2004
OFFICE OF PETITIONS

In re Application of:	:	
Allen Tran	:	
Application No. 10/407,966	:	DECISION NOTING
Filed: April 3, 2003	:	JOINDER OF
Title of Invention: SYSTEM AND	:	INVENTOR
METHOD FOR REGULATING ANTENNA	:	
ELECTRICAL STRENGTH	:	

This is in response to the Request for Reconsideration Petition, under 37 CFR 1.47(a), filed April 26, 2004, noting the joinder of the inventor. A one (1) month extension-of-time is required and the fee has been charged deposit account 50-3001 as authorized in the instant petition.

In view of the joinder of the inventor, further consideration under 37 CFR 1.47(a) is not necessary and the Reconsideration of Petition is considered to be moot. This application does not have any Rule 1.47(a) status and no such status should appear on the file wrapper. This application need not be returned to this Office for further consideration under 37 CFR 1.47(a).

The Declaration has been entered and made of record.

This application is being returned to the Office if Initial Patent Examination for further processing.

Telephone inquiries related to this decision may be directed to the undersigned at (703) 305-0014.

Derek L. Woods
Petitions Attorney
Office of Petitions

UNITED STATES PATENT AND TRADEMARK OFFICE

COMMISSIONER FOR PATENTS
UNITED STATES PATENT AND TRADEMARK OFFICE
P.O. BOX 1450
ALEXANDRIA, VA 22313-1450
www.uspto.gov

Paper No. 6

ATTN: PATENT DEPARTMENT
KYOCERA CORP.
PO BOX 928289
SAN DIEGO, CA 92192-8289

COPY MAILED
JAN 14 2004
OFFICE OF PETITIONS

In re Application of:
Allen Tran
Application No. 10/407,966
Filed: April 3, 2003
Title of Invention: SYSTEM AND METHOD FOR REGULATING ANTENNA ELECTRICAL STRENGTH

DECISION REFUSING STATUS UNDER 37 CFR 1.47(b)

This is in response to a petition under 37 CFR 1.47(b), filed November 28, 2003, to allow a person to whom an inventor has assigned or agreed in writing to assign the invention, or who otherwise shows sufficient proprietary interest in the matter justifying such action, to make application on behalf of and as agent for all inventors. The petition is properly treated under 37 CFR 1.47(b). The four (4) month extension request is hereby granted.

The petition is **dismissed**.

Rule 47 applicant is given TWO (2) MONTHS from the mailing date of this decision to reply, correcting the below-noted deficiencies. Any reply should be entitled "Request for Reconsideration of Petition Under 37 CFR 1.47(b)", and should only address the deficiencies noted below, except that the reply may include an oath or declaration executed by the non-signing inventor. Failure to respond will result in abandonment of the application. Any extensions of time will be governed by 37 CFR 1.136(a).

The above-identified application was filed on April 3, 2003, without an executed oath or declaration. This Office mailed a Notice to File Missing Parts of Nonprovisional Application (hereinafter "Notice") on May 23, 2003, requiring, *inter alia*, a

properly signed oath or declaration and a late filing fee, oath or declaration and surcharge.

In response to the Notice, Applicant files the instant petition and Declaration and Power of Attorney. The Declaration and Power of Attorney is executed by the Vice President and General Counsel of Kyocera Wireless Corp. (hereinafter "Kyocera"). The Petition avers that the inventor has a duty to assign the invention based upon an employment agreement between the inventor's employee and the Applicant. The petition further states that a copy of the employment agreement has not been provided with the instant petition because the Agreement between the Applicant and the inventor's employee is under a duty of confidentiality and thus is not disclosed. *Petition* at p.2.

A grantable petition under 37 CFR 1.47(b) requires: (1) proof that the non-signing inventor cannot be reached or refuses to sign the oath or declaration after having been presented with the application papers (specification, claims and drawings); (2) an acceptable oath or declaration in compliance with 35 U.S.C. §§ 115 and 116; (3) the petition fee; (4) a statement of the last known address of the non-signing inventor(s); (5) proof of proprietary interest; and (6) proof of irreparable harm. Applicant lacks item (5).

As to item (5), applicant failed to show or provide proof that Kyocera has sufficient proprietary interest in the subject matter to justify the filing of the application (see MPEP 409.03(f)). Acceptable proof would include a copy of the employment agreement between the non-signing inventor and the Rule 47(b) applicant (company), a copy of an assignment agreement showing that the invention disclosed in the application is assigned to the Rule 47(b) applicant, or a legal memorandum signed by an attorney familiar with the law of the jurisdiction stating that a court of competent jurisdiction would by the weight of authority in that jurisdiction award the title of the invention to the Rule 47(b) applicant.

Here, Applicant avers that it is under a duty of confidentiality with the inventor's employer and is therefore unable to provide a copy of the employment agreement. In this instance, absent an employment agreement between the non-signing inventor and Kyocera, and lacking a copy of an assignment agreement showing

that the invention disclosed in the application is assigned to Kyocera, Applicant must provide a legal memorandum signed by an attorney familiar with the laws of the jurisdiction stating that a court of competent jurisdiction would by the weight of authority in that jurisdiction award the title of the invention to Kyocera.

Further correspondence with respect to this matter should be addressed as follows:

By mail: Commissioner for Patents
PO Box 1450
Alexandria, VA 22313-1450

By FAX: (703) 872-9306
Attn: Office of Petitions

By hand: 2201 South Clark Place
Customer Window
Crystal Plaza Two, Lobby Room 1B03
Arlington, VA 22202

Telephone inquiries concerning this decision should be directed to the undersigned at (703) 305-0014.

Derek L. Woods
Petitions Attorney
Office of Petitions

UNITED STATES PATENT AND TRADEMARK OFFICE

UNITED STATES DEPARTMENT OF COMMERCE
United States Patent and Trademark Office
Address: COMMISSIONER FOR PATENTS
P.O. Box 1450
Alexandria, Virginia 22313-1450
www.uspto.gov

ADELI & TOLLEN, LLP
11940 San Vicente Blvd., Suite 100
LOS ANGELES, CA 90049

Mail Date: 04/21/2010

Applicant	: Kelly B. Jacklin	: DECISION ON REQUEST FOR
Patent Number	: 7610553	: RECALCULATION of PATENT
Issue Date	: 10/27/2009	: TERM ADJUSTMENT IN VIEW
Appliction No	: 10/407,976	: OF WYETH AND NOTICE OF INTENT TO
Filed	: 04/05/2003	: ISSUE CERTIFICATE OF CORRECTION
		:

The Request for Recalculation is **GRANTED** to the extent indicated.

The patent term adjustment has been determined to be **964** days. The USPTO will *sua sponte* issue a certificate of correction reflecting the amount of PTA days determined by the recalculation.

Prior to the issuance of the certificate of correction, the USPTO will afford patentee an opportunity to be heard and request reconsideration. Accordingly, patentee has **one month or thirty (30) days**, whichever is longer, to file a request for reconsideration of this patent term adjustment calculation. See 35 U.S.C. 154(b)(3)(B)(ii) and 37 CFR 1.322(a)(4). No extensions of time will be granted under 37 CFR 1.136.

Patentee should use document code PET.OP if electronically filing a request for reconsideration of this patent term adjustment calculation. The patentee must also include the information required by 37 CFR 1.705(b)(2) and the fee required by 37 CFR 1.18(e). If patentee does not file a timely request for reconsideration of this patent term adjustment calculation including the information required by 37 CFR 1.705(b)(2) and the fee required by 37 CFR 1.18(e), the USPTO will issue a certificate of correction reflecting the PTA determination noted above.

Patentee should be aware that in order to preserve the right to review in the United States District Court for the District of Columbia of the USPTO patent term adjustment determination, patentee must ensure that he or she also take the steps required under 35 U.S.C. 154(b)(4)(A) in a timely manner. Nothing in the request for recalculation should be construed as providing an alternative time frame for commencing a civil action under 35 U.S.C. 154(b)(4)(A).

Any questions concerning this decision should be directed to the Office of Patent Legal Administration at 571-272-7702.

UNITED STATES PATENT AND TRADEMARK OFFICE

UNITED STATES DEPARTMENT OF COMMERCE
United States Patent and Trademark Office
Address: COMMISSIONER FOR PATENTS
P.O. Box 1450
Alexandria, Virginia 22313-1450
www.uspto.gov

HICKMAN PALERMO TRUONG & BECKER/ORACLE
2055 GATEWAY PLACE
SUITE 550
SAN JOSE, CA 95110-1083

Mail Date: 04/21/2010

Applicant	: Amit Ganesh	: DECISION ON REQUEST FOR
Patent Number	: 7624112	: RECALCULATION of PATENT
Issue Date	: 11/24/2009	: TERM ADJUSTMENT IN VIEW
Appliction No	: 10/407,998	: OF WYETH AND NOTICE OF INTENT TO
Filed	: 04/03/2003	: ISSUE CERTIFICATE OF CORRECTION
		:

The Request for Recalculation is **GRANTED** to the extent indicated.

The patent term adjustment has been determined to be **1094** days. The USPTO will *sua sponte* issue a certificate of correction reflecting the amount of PTA days determined by the recalculation.

Prior to the issuance of the certificate of correction, the USPTO will afford patentee an opportunity to be heard and request reconsideration. Accordingly, patentee has **one month or thirty (30) days**, whichever is longer, to file a request for reconsideration of this patent term adjustment calculation. See 35 U.S.C. 154(b)(3)(B)(ii) and 37 CFR 1.322(a)(4). No extensions of time will be granted under 37 CFR 1.136.

Patentee should use document code PET.OP if electronically filing a request for reconsideration of this patent term adjustment calculation. The patentee must also include the information required by 37 CFR 1.705(b)(2) and the fee required by 37 CFR 1.18(e). If patentee does not file a timely request for reconsideration of this patent term adjustment calculation including the information required by 37 CFR 1.705(b)(2) and the fee required by 37 CFR 1.18(e), the USPTO will issue a certificate of correction reflecting the PTA determination noted above.

Patentee should be aware that in order to preserve the right to review in the United States District Court for the District of Columbia of the USPTO patent term adjustment determination, patentee must ensure that he or she also take the steps required under 35 U.S.C. 154(b)(4)(A) in a timely manner. Nothing in the request for recalculation should be construed as providing an alternative time frame for commencing a civil action under 35 U.S.C. 154(b)(4)(A).

Any questions concerning this decision should be directed to the Office of Patent Legal Administration at 571-272-7702.

UNITED STATES PATENT AND TRADEMARK OFFICE

Commissioner for Patents
United States Patent and Trademark Office
P.O. Box 1450
Alexandria, VA 22313-1450
www.uspto.gov

HELLER EHRMAN LLP
4350 LA JOLLA VILLAGE DRIVE, 7TH FLOOR
SAN DIEGO CA 92122

COPY MAILED

AUG 0 8 2008

In re Application of	:	
AFAR, Daniel E. et al.	:	
Application No. 10/408,009	:	DECISION ON PETITION
Filed: April 04, 2003	:	TO WITHDRAW
Attorney Docket No. **39766-0163-c1**	:	FROM RECORD
	:	

This is a decision on the Request to Withdraw as attorney or agent of record under 37 C.F.R. § 1.36(b), filed July 17, 2008.

The request is **APPROVED**.

A grantable request to withdraw as attorney/agent of record must be signed by every attorney/agent seeking to withdraw or contain a clear indication that one attorney is signing on behalf of another/others. The Office requires the practitioner(s) requesting withdrawal to certify that he, she, or they have: (1) given reasonable notice to the client, prior to the expiration of the response period, that the practitioner(s) intends to withdraw from employment; (2) delivered to the client or a duly authorized representative of the client all papers and property (including funds) to which the client is entitled; and (3) notified the client of any responses that may be due and the time frame within which the client must respond, pursuant 37 CFR 10.40(c).

The request was signed by Leslie B. Overman on behalf of all attorneys of record who are associated with customer No. 25213. All attorneys/agents associated have been withdrawn. Applicant is reminded that there is no attorney of record at this time.

The request to change the correspondence address of record is not acceptable as the requested correspondence address is not that of: (1) the first named signing inventor; or (2) an intervening assignee of the entire interest under 37 C.F.R 3.71. All future communications from the Office will be directed to the first named signing inventor.

The notice of appeal filed July 03, 2008 requires a reply from the applicant.

Michelle R. Eason
Paralegal Specialist
Office of Petitions

cc: **DANIEL E. AFAR**
17250 SUNSET BOULEVARD
PACIFIC PALISADES, CA 90272

cc: **GOODWIN PROCTER LLP**
ATTN: PATENT ADMINISTRATOR
135 COMMONWEALTH DRIVE
MENLO PARK, CA 94025-1105

UNITED STATES PATENT AND TRADEMARK OFFICE

Commissioner for Patents
United States Patent and Trademark Office
P.O. Box 1450
Alexandria, VA 22313-1450
www.uspto.gov

Peter J. Yim
Morrison & Foerster LLP
425 Market Street
San Francisco, CA 94105-2482

COPY MAILED

JUL 11 2007

OFFICE OF PETITIONS

In re Application of	:	
Chia-Chee Kuan et al.	:	
Application No. 10/408,013	:	DECISION ON PETITION
Filed: November 3, 2003	:	TO WITHDRAW
Attorney Docket No. 529252000500	:	FROM RECORD

This is a decision on the Request to Withdraw as attorney or agent of record under 37 C.F.R. § 1.36(b), filed November 30, 2006.

The request is **NOT APPROVED** as moot.

A review of the file record indicates that the power of attorney to Morrison & Foerster LLP has been revoked by the assignee of the patent application on March 25, 2007. Accordingly, the request to withdraw under 37 C.F.R. § 1.36(b) is moot.

All future communications from the Office will continue to be directed to the below-listed address until otherwise notified by applicant.

Telephone inquires concerning this decision should be directed to Terri Williams at 571-272-2991.

Terri Williams
Petitions Examiner
Office of Petitions

cc: **Blakely Sokoloff Taylor & Zafman**
1279 Oakmead Parkway
Sunnyvale, CA 94085-4040

UNITED STATES PATENT AND TRADEMARK OFFICE

UNITED STATES DEPARTMENT OF COMMERCE
United States Patent and Trademark Office
Address: COMMISSIONER FOR PATENTS
P.O. Box 1450
Alexandria, Virginia 22313-1450
www.uspto.gov

KNOBLE, YOSHIDA & DUNLEAVY
EIGHT PENN CENTER
SUITE 1350, 1628 JOHN F KENNEDY BLVD
PHILADELPHIA, PA 19103

Mail Date: 04/21/2010

Applicant	: Steven B. Dunn	: DECISION ON REQUEST FOR
Patent Number	: 7587992	: RECALCULATION of PATENT
Issue Date	: 09/15/2009	: TERM ADJUSTMENT IN VIEW
Appliction No	: 10/408,028	: OF WYETH AND NOTICE OF INTENT TO
Filed	: 04/04/2003	: ISSUE CERTIFICATE OF CORRECTION
		:

The Request for Recalculation is **GRANTED** to the extent indicated.

The patent term adjustment has been determined to be **738** days. The USPTO will *sua sponte* issue a certificate of correction reflecting the amount of PTA days determined by the recalculation.

Prior to the issuance of the certificate of correction, the USPTO will afford patentee an opportunity to be heard and request reconsideration. Accordingly, patentee has **one month or thirty (30) days**, whichever is longer, to file a request for reconsideration of this patent term adjustment calculation. See 35 U.S.C. 154(b)(3)(B)(ii) and 37 CFR 1.322(a)(4). No extensions of time will be granted under 37 CFR 1.136.

Patentee should use document code PET.OP if electronically filing a request for reconsideration of this patent term adjustment calculation. The patentee must also include the information required by 37 CFR 1.705(b)(2) and the fee required by 37 CFR 1.18(e). If patentee does not file a timely request for reconsideration of this patent term adjustment calculation including the information required by 37 CFR 1.705(b)(2) and the fee required by 37 CFR 1.18(e), the USPTO will issue a certificate of correction reflecting the PTA determination noted above.

Patentee should be aware that in order to preserve the right to review in the United States District Court for the District of Columbia of the USPTO patent term adjustment determination, patentee must ensure that he or she also take the steps required under 35 U.S.C. 154(b)(4)(A) in a timely manner. Nothing in the request for recalculation should be construed as providing an alternative time frame for commencing a civil action under 35 U.S.C. 154(b)(4)(A).

Any questions concerning this decision should be directed to the Office of Patent Legal Administration at 571-272-7702.

UNITED STATES PATENT AND TRADEMARK OFFICE
Certificate

Patent No. 6,837,089 B2 Patented: January 4, 2005

On petition requesting issuance of a certificate for correction of inventorship pursuant to 35 U.S.C. 256, it has been found that the above identified patent, through error and without any deceptive intent, improperly sets forth the inventorship.

Accordingly, it is hereby certified that the correct inventorship of this patent is: Kevin Reed Jentzsch, Arvada, CO (US); and Mark A. Jacober, Arvada, CO (US).

Signed and Sealed this Twenty-fifth Day of December 2007.

DERRIS H. BANKS
Supervisory Patent Examiner
Art Unit 3725

January 5, 2008

Examiner DERRIS H. BANKS Group 3725

Please sign certificate for correction of inventorship and send to attorney. Envelope with mailing address is attached

Thanks,
Certificate of Correction Branch
703-308-9390 ext. 111

UNITED STATES PATENT AND TRADEMARK OFFICE

Commissioner for Patents
United States Patent and Trademark Office
P.O. Box 1450
Alexandria, VA 22313-1450
www.uspto.gov

THE TOP-FLITE GOLF COMPANY, A WHOLLY OWNED
SUBSIDIARY OF CALLLAWAY GOLF COMPANY
LEGAL DEPARTMENT
2180 RUTHERFORD ROAD
CARLSBAD, CA 92008-7328

COPY MAILED

APR 04 2005

OFFICE OF PETITIONS

In re Application of	:	
Thomas J. Kennedy III et al	:	
Application No. 10/408,052	:	DECISION GRANTING PETITION
Filed: April 4, 2003	:	UNDER 37 CFR 1.313(c)(2)
Attorney Docket No. 043596.101	:	

This is a decision on the petition, filed March 30, 2005, under 37 CFR 1.313(c)(2) to withdraw the above-identified application from issue after payment of the issue fee.

The petition is **GRANTED**.

The above-identified application is withdrawn from issue for consideration of a submission under 37 CFR 1.114 (request for continued examination). See 37 CFR 1.313(c)(2).

Petitioner is advised that the issue fee paid on January 10, 2005 in the above-identified application cannot be refunded. If, however, the above-identified application is again allowed, petitioner may request that it be applied towards the issue fee required by the new Notice of Allowance.[1]

A change of correspondence address was filed in this application on January 10, 2005, signed by Christopher M. Champion. However, the change of address cannot be entered since Mr. Champion is not an applicant nor a registered patent attorney or agent. If, as it appears, Mr. Champion is signing on behalf of the assignee, then compliance with 37 CFR 3.73(b) must be satisfied in order for the Office to change the correspondence address of record. A courtesy copy of this decision is being mailed to the address

---

[1] *The request to apply the issue fee to the new Notice may be satisfied by completing and returning the new Issue Fee Transmittal Form PTOL-85(b), which includes the following language thereon: "Commissioner for Patents is requested to apply the Issue Fee and Publication Fee (if any) or re-apply any previously paid issue fee to the application identified above." Petitioner is advised that, whether a fee is indicated as being due or not, the Issue Fee Transmittal Form* ***must*** *be completed and timely submitted to avoid abandonment. Note the language in bold text on the first page of the Notice of Allowance and Fee(s) Due (PTOL-85).*

noted on the January 10, 2005 communication. However, until compliance with 37 CFR 3.73(b) has been satisfied, all future correspondence will be directed solely to the above-noted address of record.

Further, the application file does not indicate a change of address has been filed in this case, although the address given on the petition differs from the address of record. If appropriate, a change of address should be filed in this case in accordance with MPEP 601.03. A courtesy copy of this decision is being mailed to the address noted on the petition. However, until otherwise instructed, all future correspondence regarding this application will be mailed solely to the address of record.

Telephone inquiries should be directed to the undersigned at (571) 272-3218.

This matter is being referred to Technology Center AU 3811 for processing of the request for continued examination under 37 CFR 1.114 and for consideration of the concurrently filed Information Disclosure Statement.

Frances Hicks

Frances Hicks
Petitions Examiner
Office of Petitions
Office of the Deputy Commissioner
for Patent Examination Policy

cc:

Russell Corporation
3330 Cumberland Boulevard
Suite 800
Atlanta, GA 30339

Christopher Holland
Smith, Gambrell & Russell LLP
1230 Peachtree Street
Suite 3100, Promenade 11
Atlanta, GA 30309-3592

UNITED STATES PATENT AND TRADEMARK OFFICE

Technology Center 1700

Mailed: 1-3-06

MEB
Paper Number:

In re application of
Chellappa et al.
Serial No. 10/408,058
Filed: April 4, 2003
For: Surface Modification Of Porous Metal Substrates

DECISION ON PETITION

This is a response to the PETITION TO WITHDRAW ABANDONMENT, filed October 19, 2005. The petition requests that the abandonment, as set forth in the Notice of Abandonment of September 26, 2005, for failure to timely reply to the Notice of Allowance of April 7, 2005 be withdrawn. The petitioner asserts that the issue fee payment was timely filed by fax with the Office on June 21, 2005, with the appropriate fees. A copy of the faxed papers, with a signed and dated certificate of transmission, and a copy of the confirmation fax page are also provided as evidence.

DECISION

The instant request is accepted as a timely petition under 37 C.F.R. 1.181 (no fee), and is evaluated under the procedures regarding a Petition To Withdraw Holding of Abandonment Based on Evidence That a Reply Was Timely Mailed or Filed.

As set forth in MPEP 711.03(c) Petition To Withdraw Holding of Abandonment Based on Evidence That a Reply Was Timely Mailed or Filed:
37 CFR 1.10(c) through 1.10(e) set forth procedures for petitioning the Director of the USPTO to accord a filing date to correspondence as of the date of deposit of the correspondence as "Express Mail." A petition to withdraw the holding of abandonment relying upon a timely reply placed in "Express Mail" must include an appropriate petition under 37 CFR 1.10(c), (d), or (e) (see MPEP § 513). When a paper is shown to have been mailed to the Office using the "Express Mail" procedures, the paper must be entered in PALM with the "Express Mail" date.

Similarly, applicants may establish that a reply was filed with a postcard receipt that properly identifies the reply and provides prima facie evidence that the reply was timely filed. See MPEP § 503. For example, if the application has been held abandoned for failure to file a reply to a first Office action, and applicant has a postcard receipt showing that an amendment was timely filed in response to the Office action, then the holding of abandonment should be withdrawn upon the filing of a petition to withdraw the holding of abandonment. When the reply is shown to have been timely filed based on a postcard receipt, the reply must be entered into PALM using the date of receipt of the reply as shown on the post card receipt. Where a certificate of mailing or transmission under 37 CFR 1.8, but not a postcard receipt, is relied upon in a petition to withdraw the holding of abandonment, see 37 CFR 1.8(b) and MPEP § 512. As stated in 37 CFR 1.8(b)(3) the statement that attests to the previous timely mailing or transmission of the correspondence must be on a personal knowledge basis, or to the satisfaction of the Director of the USPTO. If the statement attesting to the previous timely mailing is not made by the person who signed the Certificate of Mailing (i.e., there is no personal knowledge basis), then the statement attesting to the previous timely mailing should include evidence that supports the conclusion that the correspondence was actually mailed (e.g., copies of a mailing log establishing that correspondence was mailed for that application). When the correspondence is shown to have been timely filed based on a certificate of mailing, the correspondence is entered into PALM with the actual date of receipt (i.e., the date that the duplicate copy of the papers was filed with the statement under 37 CFR 1.8).

The petitioner's showing that the issue fee payment was submitted by fax, which was received by the Office on June 21, 2005 is sufficient. Therefore, the Notice of Abandonment, mailed September 26, 2005, is hereby withdrawn. The application will be forwarded to the issue branch for processing and consideration of the issue fee payment filed June 21, 2005, and a copy of which is provided as an attachment to the instant petition.

The Petition is **Granted**.

UNITED STATES PATENT AND TRADEMARK OFFICE

Technology Center 1700

Jacqueline M. Stone

Jacqueline Stone, Director
Technology Center 1700
Chemical and Materials Engineering

Mark H. Krietzman
Greenberg Traurig, LLP
2450 Colorado Avenue, Suite 400
Santa Monica, CA 90404

UNITED STATES PATENT AND TRADEMARK OFFICE

COMMISSIONER FOR PATENTS
UNITED STATES PATENT AND TRADEMARK OFFICE
P.O. BOX 1450
ALEXANDRIA, VA 22313-1450
www.uspto.gov

Paper No. 9

Keith D. Parr, Esq.
LORD, BISSELL & BROOK
Suite 3300
115 South LaSalle Street
Chicago, IL 60603

COPY MAILED
NOV 21 2003
OFFICE OF PETITIONS

In re Application of	:
Curzon, et al.	: DECISION ON PETITION
Application No. 10/408,072	:
Filed: April 4, 2003	:
Atty. Dkt. No.: 6770200-0001	:

This decision is in response to the petition filed under 37 CFR 1.10(c), filed August 28, 2003, to accord the above-identified application a filing date of April 4, 2003.

Petitioner alleges that the application was deposited in Express Mail service April 4, 2003. As supporting evidence, petitioner has provided a copy of an Express Mail label bearing tracking number EU255719004US (the same Express Mail number found on the application transmittal letter accompanying the original application papers located in the official file) and a "date-in" of April 4, 2003. In addition, a search of the USPTO's USPS Express Mail Information Database indicates that a package bearing Express Mail label No. EU255719004US was accepted by the USPS on March 14, 2003 and delivered to the United States Patent and Trademark Office on April 4 2003.

In view of the above, the petition under 37 CFR 1.10(c) to accord the above-identified application a filing date of March 14, 2003 is hereby **GRANTED**.

No fee is due in connection with this petition.

This application is being forwarded to the Office of Initial Patent Examination for further processing with a filing date of April 4, 2003.

Telephone inquiries regarding this decision should be directed to the undersigned at (703) 305-0310.

Alesia M. Brown
Senior Petitions Attorney
Office of Petitions

FAX RECEIVED
AUG 2 8 2003
PETITIONS OFFICE

Facsimile Transmission Cover Letter

Date: August 28, 2003

To: Aleshia Brown, Office of Petitions
U.S. Patent and Trademark Office
Fax No. (703) 308-6916

From: Roberta L. Hastreiter
Patent Attorney
Lord, Bissell & Brook, LLP

Subject: Patent Application U.S. Serial No. 10/408,072
Filed on April 4, 2003
"Flame Retardant and Microbe Inhibiting Methods and Compositions"

File: 6770200-0001

Pages: Cover + 8

Enclosed:
(1) Petition to Change Filing Date of Application;
(2) Filing Receipt;
(3) Certificate of Mailing by Express Mail;
(4) Express Mail Post Office to Addressee Document; and
(5) Receipt from Web Bridge Post Office in the Amount of $13.65.

UNITED STATES PATENT AND TRADEMARK OFFICE

Commissioner for Patents
United States Patent and Trademark Office
P.O. Box 1450
Alexandria, VA 22313-1450
www.uspto.gov
DIW Oct-06

CHEVRON SERVICES COMPANY
LAW DEPARTMENT
INTELLECTUAL PROPERTY GROUP
P.O. BOX 3725
HOUSTON TX 77253-3725

COPY MAILED

OCT 31 2006

OFFICE OF PETITIONS

In re Application of	:	
Kevin Hoa Nguyen	:	
Application No. 10/408,080	:	ON PETITION
Filed: 4 April, 2003	:	
Atty Docket No. X-0076	:	

This is a decision on the petition to withdraw the holding of abandonment, filed on 7 August, 2006, which is treated as a petition under 37 CFR 1.181.

This application became abandoned on 4 June, 2006, for failure to timely submit the issue and publication fees in response to the Notice of Allowance and Fee(s) Due mailed on 3 March, 2006, which set a three (3) month statutory period for reply. Notice of Abandonment was mailed on 14 July, 2006.

In the present petition, petitioners request that the Office withdraw the holding of abandonment due to non-receipt of the Notice mailed on 3 March, 2006.

A review of the record indicates no irregularity in the mailing of the Office communication mailed on 3 March, 2006, and in the absence of any irregularity in the mailing, there is a strong presumption that the Office action was properly mailed to the address of record. This presumption may be overcome by a showing that the Office action was not in fact received. The showing required to establish non-receipt of an Office communication must include a statement from the practitioner, stating that the practitioner did not receive the Office communication and attesting to the fact that a search of the file jacket and docket records indicates that the Office communication was not received. A copy of the docket record where the non-received Office

communication would have been entered had it been received and docketed must be attached to and referenced in practitioner's statement.[1] For example, if a three-month period for reply was set in the non-received Office action, a copy of the docket report showing all replies docketed for a date three months from the mail date of the non-received Office action must be submitted as documentary proof of non-receipt of the Office action.

The showing outlined above may not be sufficient if there are circumstances that point to a conclusion that the Office action may have been lost after receipt rather than a conclusion that the Office action was lost in the mail (e.g., if the practitioner has a history of not receiving Office actions).

Petitioners have supplied a copy of a docket report along with a statement by the practitioner attesting to the fact that a search of the file jacket and docket records indicates that the Office action was not received. The docket report is referenced in the practitioner's statement. A Change of Correspondence address has been filed with the petition.

The showing of record is that the Notice of Allowance and Fee(s) Due was mailed to ChevronTexaco Corporation, Suite 4040, 1111 Bagby, Houston, TX 77002. However, the address listed in the petition is Customer No. 38393, Chevron Services Company, P.O. Box 3725, Houston, TX 77253-3725. This Customer Number is also listed in the Change of Correspondence Address Filed with the present petition.

As such, a question is raised as to whether petitioners were receiving mail at the address of record at the time the Notice of Allowance and Fee(s) Due was mailed. Petitioners must verify that they were, in fact, receiving mail at the correspondence address listed in the Notice at the time the Notice was mailed, and for a reasonable time thereafter. The showing of record leads to a conclusion that the Office action may have been lost after receipt at the address of record because petitioners were no longer receiving mail at that address, rather than being lost in the mail.

Any renewed petition must explain when petitioners' address changed, and explain whether petitioners were receiving mail at

---

[1] M.P.E.P. § 711.03(c); See Notice entitled "Withdrawing the Holding of Abandonment When Office Actions Are Not Received," 1156 O.G. 53 (November 16, 1993).

the address listed on the Notice of Allowance and Fee(s) Due at the time the Notice was mailed.

Accordingly, the showing of record is insufficient to warrant withdrawal of the holding of abandonment at this time.

The petition is **DISMISSED.**

Any request for reconsideration of this decision must be submitted within **TWO (2) MONTHS** from the mail date of this decision. The reconsideration request should include a cover letter entitled "Renewed Petition under 37 CFR 1.181." Extensions of time are permitted under 37 CFR 1.136(a). In the alternative, petitioners may wish to file a petition under 37 CFR 1.137(b) to revive an unintentionally abandoned application.

Further correspondence with respect to this matter should be addressed as follows:

By mail: Mail Stop Petition
Commissioner for Patents
P.O. Box 1450
Alexandria, VA 22313-1450

By FAX: (571) 273-8300
Attn: Office of Petitions

By hand: Customer Service Window
Mail Stop Petition
Randolph Building
401 Dulany Street
Alexandria, VA 22314

Telephone inquiries related to this decision should be directed to the undersigned at 571-272-3231.

D Wood

Douglas I. Wood
Senior Petitions Attorney
Office of Petitions

UNITED STATES PATENT AND TRADEMARK OFFICE

Commissioner for Patents
United States Patent and Trademark Office
P.O. Box 1450
Alexandria, VA 22313-1450
www.uspto.gov
DIW May-07

CHEVRON SERVICES COMPANY
LAW, INTELLECTUAL PROPERTY GROUP
P.O. BOX 4368
HOUSTON TX 77210-4368

COPY MAILED

MAY 17 2007

OFFICE OF PETITIONS

In re Application of	:	
Kevin Hoa Nguyen	:	
Application No. 10/408,080	:	DECISION ON PETITION
Filed: 4 April, 2003	:	
Atty Docket No. X-0076	:	

This is a decision on the petition filed on 12 March, 2007, under 37 CFR 1.137(b),[1] to revive the above-identified application.

The petition is **GRANTED**.

---

[1] Effective December 1, 1997, the provisions of 37 CFR 1.137(b) now provide that where the delay in reply was unintentional, a petition may be filed to revive an abandoned application or a lapsed patent pursuant to 37 CFR 1.137(b). A grantable petition filed under the provisions of 37 CFR 1.137(b) must be accompanied by:

(1) the required reply, unless previously filed. In a nonprovisional application abandoned for failure to prosecute, the required reply may be met by the filing of a continuing application. In a nonprovisional utility or plant application filed on or after June 8, 1995, and abandoned for failure to prosecute, the required reply may also be met by the filing of a request for continuing examination in compliance with § 1.114. In an application or patent, abandoned or lapsed for failure to pay the issue fee or any portion thereof, the required reply must be the payment of the issue fee or any outstanding balance thereof. In an application, abandoned for failure to pay the publication fee, the required reply must include payment of the publication fee.

(2) the petition fee as set forth in 37 CFR 1.17(m);

(3) a statement that the entire delay in filing the required reply from the due date for the reply until the filing of a grantable petition pursuant to 37 CFR 1.137(b) was unintentional. The Commissioner may required additional information where there is a question whether the delay was unintentional; and

(4) any terminal disclaimer (and fee as set forth in 37 CFR 1.20(d)) required pursuant to 37 CFR 1.137(c)).

The application became abandoned on 4 June, 2006, for failure to timely pay the issue and publication fees as required by the Notice of Allowance Fee(s) Due mailed on 3 March, 2006, which set a three (3) month statutory period for reply. Notice of Abandonment was mailed on 14 July, 2006. The petition to withdraw the holding of abandonment filed on 7 August, 2006, was dismissed on 31 October, 2006.

Receipt of the issue and publication fees on 7 August, 2006, is acknowledged.

This application is being referred to the Publishing Division for processing into a patent.

Telephone inquiries concerning this matter may be directed to the undersigned at (571)272-3231.

DWood

Douglas I. Wood
Senior Petitions Attorney
Office of Petitions

SPE RESPONSE FOR CERTIFICATE OF CORRECTION

Paper No.: _____

DATE : 4/29/2005

TO SPE OF : ART UNIT 2800(2855)

SUBJECT : Request for Certificate of Correction on Patent No.: 6,817,232

A response is requested with respect to the accompanying request for a certificate of correction.

Please complete this form and return with file, within **7** days to:
Certificates of Correction Branch - PK 3-922
Palm location **7580** - Tel. No. 305-8309

With respect to the change(s) requested, correcting Office and/or Applicant's errors, should the patent read as shown in the certificate of correction? No new matter should be introduced, nor should the scope or meaning of the claims be changed.

***Should the claims be changed?**

Ernest C. White, LIE305-8339
Certificates of Correction Branch

Thank You For Your Assistance

The request for issuing the above-identified correction(s) is hereby:
Note your decision on the appropriate box.

- ☒ **Approved** — All changes apply.
- ☐ **Approved in Part** — Specify below which changes **do not** apply.
- ☐ **Denied** — State the reasons for denial below.

Comments:

Applicant's comments are correct.
Correction should be made.

SPE — 2855 Art Unit

UNITED STATES PATENT AND TRADEMARK OFFICE

COMMISSIONER FOR PATENTS
UNITED STATES PATENT AND TRADEMARK OFFICE
P.O. BOX 1450
ALEXANDRIA, VA 22313-1450
www.uspto.gov

JJGJr.: 04-05

Paper No. __

ANTONELLI, TERRY,
STOUT & KRAUS, LLP
1300 NORTH SEVENTEENTH STREET
SUITE 1800
ARLINGTON VA 22209-3873

COPY MAILED
APR 1 4 2005
OFFICE OF PETITIONS

In re Application of	:	
Coersmeier	:	
Application No. 10/408,106	:	
Filed: 8 April, 2003	:	ON PETITION
Attorney Docket No:	:	
1135.42578X00/NC36764US	:	

This is a decision on the petition under 37 C.F.R. §1.55(c), filed 9 December, 2003, for acceptance of an unintentionally delayed claim under 35 U.S.C. § 119(a)-(d) for benefit of the filing date of foreign Application PCT/IB02/02775 filed 15 July, 2002, and PCT/FI02/00737, filed 16 September, 2002.

The Office regrets the delay in addressing this matter.

The petition is **GRANTED**.

A petition under 37 C.F.R. §1.55(c) to accept an unintentionally delayed claim for priority requires:

- The nonprovisional application claiming the benefit of an earlier filing date must be filed on or after November 29, 2000;

- The claim submitted with the petition must identify the prior foreign application for which priority is claimed, as well as any foreign application for the same subject matter and having a filing date before that of the application for which priority is claimed, by the application number, country, and the filing date and be included either in an oath or declaration (37 C.F.R. §1.63(c)(2)) or in an Application Data Sheet (ADS) (37 C.F.R. §1.76(b)(6);

- The surcharge as set forth in 37 C.F.R. §1.17(t);
- A statement that the entire delay between the date the claim was due under 37 C.F.R. §1.55(a)(1) and the date the claim was filed was unintentional. (The Commissioner may require additional information where there is a question whether the delay was unintentional); and
- The above-identified nonprovisional application must be filed within 12 months of the filing date of the foreign application.

The instant pending nonprovisional application was filed after 29 November, 2000, and did not include a reference to the foreign applications, for which benefit is now sought, within the later of four months from the actual filing date of the application or sixteen months from the filing date of the prior foreign applications. Therefore, since the claim for priority is submitted after the period specified in 37 C.F.R. §1.55(a)(1)(i), this is an appropriate petition under the provisions of 37 C.F.R. §1.55(c).

The above-identified pending nonprovisional application was filed on 8 April, 2003, which is after November 29, 2000 and within 12 months of Application PCT/IB02/02775 filed 15 July, 2002, and PCT/FI02/00737, filed 16 September, 2002 (*i.e.*, filing dates of the foreign applications to which benefit is now being claimed).

The required petition fee of $1,330.00 was received with the petition.

An executed oath/declaration has been received which identifies the foreign applications for which priority is claimed by application number, country and filing date.[1]

Lastly, petitioner has provided an adequate statement of unintentional delay.

A corrected Filing Receipt, which includes the priority claim(s) to the prior-filed foreign applications, accompanies this decision on petition.

All requirements having been met, the petition under 37 C.F.R. §1.55(c) to accept an unintentionally delayed claim for priority under 35 U.S.C. § 119(a)-(d) is **granted**.

[1] See: 37 C.F.R. §1.63(c)(2)) or 37 C.F.R. §1.76(b)(6).

Application No. 10/408,106

This matter is being referred to Technology Center Art Unit 2184 for examination in due course, including therein consideration of Applicant's entitlement to claim benefits of the above-noted prior-filed foreign applications.

Inquiries concerning this decision may be directed to John Gillon, Senior Attorney, Office of Petitions at (571) 272-3214.

Frances Hicks

Frances Hicks
Petitions Examiner
Office of Petitions

Encl.: Corrected Filing Receipt

UNITED STATES PATENT AND TRADEMARK OFFICE

COMMISSIONER FOR PATENTS
UNITED STATES PATENT AND TRADEMARK OFFICE
P.O. BOX 1450
ALEXANDRIA, VA 22313-1450
www.uspto.gov

Paper No.

LIFESCAN
NUTTER MCCLENNEN & FISH LLP
155 SEAPORT BOULEVARD
BOSTON, MA 02210-2604

COPY MAILED

JUN 23 2005

OFFICE OF PETITIONS

In re Application of	:	
Alastair Hodges	:	DECISION ON PETITION
Application No. 10/408,150	:	
Filed: April 3, 2003	:	
Atty Docket No. LFSCAN.086DV2	:	

This is a decision on the "PETITION UNDER 37 CFR 1.53(e)" filed April 13, 2005, requesting that the above-identified application be accorded a filing date of April 3, 2003 with pages 10 and 11 of the specification considered part of the original application disclosure.

Application papers in the above-identified application were filed on April 3, 2003. No "Notice of Omitted Items" was mailed in this application. Petitioner states that the petition is being filed in response to a telephone conversation with the Examiner, in which, it was indicated that pages 10 and 11 were omitted from the electronic file wrapper. A review of the image file wrapper for this application confirms that pages 10 and 11 appear to have been omitted from the application as filed.

On petition, petitioner asserts that the originally filed application included 15 pages and had 43 claims. In support thereof, petitioner submits a copy of their return postcard receipt.

A postcard receipt, which itemizes and properly identifies the items, which are being filed, serves as prima facie evidence of receipt in the Office of all items listed thereon on the date stamped thereon by the Office. See MPEP 503. A review of

petitioner's postcard receipt reveals that: 1) it was date stamped as received in the Office on April 3, 2003, and the papers filed therewith were assigned application No. 10/408,150; 2) it specifically identifies the items being filed, including "Patent Application in 15 pages, including the Specification and 43 claims" and 3) it lacks any annotation of non-receipt of any item denoted on the postcard. Thus, petitioner has shown that the items denoted, including the 15 pages of specification, were filed on April 3, 2003.

The application papers already considered received in the Office on April 3, 2003, were reviewed along with the missing pages of specification submitted on petition. These papers together constitute the items described on the postcard receipt as "Patent Application in 15 pages, including the Specification and 43 claims." Petitioner has shown that pp. 10 and 11 of the specification were among the items present in the application on the date of deposit and should be included in the original application papers.

Accordingly, the petition is **GRANTED**.

Given the basis for granting the petition, the petition fee has been refunded to Deposit Account No. 14-1449, as authorized.

The application is being forwarded to the Office of Initial Patent Examination (OIPE) for:

- further processing **with a filing date of April 3, 2003**, using the application papers received in the Office on that date and the missing pages of specification, pp. 10 and 11, re-supplied on petition filed April 13, 2005.

Applicant will receive appropriate notifications regarding the fees owed, if any, and other information in due course from OIPE.

Telephone inquiries specific to this decision should be directed to the undersigned at (571) 272-3219.

Nancy Johnson
Senior Petitions Attorney
Office of Petitions

UNITED STATES PATENT AND TRADEMARK OFFICE

Commissioner for Patents
United States Patent and Trademark Office
P.O. Box 1450
Alexandria, VA 22313-1450
www.uspto.gov

CALFEE HALTER & GRISWOLD, LLP
800 SUPERIOR AVENUE
SUITE 1400
CLEVELAND OH 44114

COPY MAILED

APR 16 2009

OFFICE OF PETITIONS

In re Patent No. 7,452,564	:	
Jindra et al.	:	DECISION ON REQUEST
Issue Date: November 18, 2008	:	FOR RECONSIDERATION
Application No. 10/408,162	:	OF
Filed: April 8, 2003	:	PATENT TERM ADJUSTMENT
Attorney Docket No. 26416/05287	:	

This is in response to the "APPLICATION FOR PATENT TERM ADJUSTMENT INCLUDING REQUEST FOR RECONSIDERATION UNDER 37 CFR 1.705 (b) and(d)," filed January 16, 2009, requesting that the patent term adjustment determination for the above-identified patent be changed from seven hundred eleven (711) days to one thousand two hundred twenty-three (1223) days.

The request for reconsideration is **DISMISSED**.

Patentees are given **TWO (2) MONTHS** to respond to this decision. No extensions of time will be granted under § 1.136(a).

On November 18, 2008, the above-identified application matured into US Patent No. 7,452,564 with a revised patent term adjustment of 711 days. This revised determination included entry of an additional period of adjustment of three hundred and three (303) days for the Office taking in excess of three years to issue the patent.

This request for reconsideration of patent term adjustment was timely filed within two months of the issue date of the patent. See 1.705(d).

The Office acknowledges submission of the $200.00 fee set forth in 37 CFR 1.18(e). No additional fees are required.

Citing Wyeth v. Dudas, 580 F. Supp. 2d 138, 88 U.S.P.Q. 2d 1538 (D.D.C. 2008), Patentees argue that the determination of 711 days is in error in that pursuant to 35 U.S.C. §154(b) the Office failed to take certain actions within the time frames specified in 37 CFR § 1.702(a) **and** failed to issue a patent within three years of the actual filing date of the above-referenced application in accordance with 37 CFR § 1.702(b).

Patentees assert that they are entitled to a period of adjustment due to examination delay, pursuant to 37 CFR §1.702(a), of 652 days and period of adjustment due to the Three Year Delay by the Office, pursuant to 37 CFR § 1.703(b), of 955 days. The 652 day period is the sum of:

- a period of delay of 512 days for the failure by the Office to mail at least one of a notification under 35 U.S.C. 132 not later than fourteen months after the date on which the application was filed under 35 U.S.C. 111(a), pursuant to § 1.702(a)(1); and
- a period of delay of 140 days for the failure by the Office to respond to a reply under 35 U.S.C. 132 not later than four months after the date on which the reply was filed, pursuant to § 1.702(a)(2)

The 955 day period is calculated based on the application having been filed under 35 U.S.C. §111(a) on April 8, 2003, and the patent having not issued until November 18, 2008, three years and 955 days later.

Patentees further state, citing 37 CFR § 1.703(f), that they are entitled to a period of patent term adjustment equal to the period of delays based on the grounds set forth in 37 CFR §1.702 reduced by the period of time equal to the period of time during which Patentees failed to engage in reasonable efforts to conclude prosecution pursuant to 37 CFR §1.704. In other words, the period of Office delay reduced by the period of applicant delay. Patentees do not dispute the period of reduction of 244 days for applicant delay. Patentees assert that the total period of Office delay is the sum of the period of Three Years Delay (955 days) and the period of Examination Delay (652 days) to the extent that these periods of delay are not overlapping.

Patentees contend that the periods overlap only to the extent that the period of 4 month examination delay of 140 days (May 12, 2007 to September 28, 2007) overlaps with a portion of the Three Year Delay period (April 9, 2006 to November 18, 2008). Accordingly, Patentees submit that the total period of Office Delay is 1,467 days, which is the sum of the period of Three Year Delay (955 days) and the period of Examination Delay (652 days), reduced by the period of overlap (140 days). See p. 3 of petition.

As such, Patentees assert entitlement to a patent term adjustment of 1,223 days (652 + 955 reduced by 140 overlap - 244 (applicant delay)).

The Office agrees that the patent issued 3 years and 955 days after its filing date. The Office agrees that the actions detailed above were not taken within the specified time frames, and thus, the entry of period of adjustment of 652 days is correct. At issue is whether Patentees should accrue 815 days (adjusted for overlap, per Patentees' calculations) of patent term adjustment for the Office taking in excess of three years to issue the patent, as well as, 652 days for Office failure to take a certain action within a specified time frame (or examination delay).

The Office contends that more than 140 days of the 955 days overlap. Patentees' calculation of the period of overlap is inconsistent with the Office's interpretation of this provision. 35 U.S.C. 154(b)(2)(A) limits the adjustment of patent term, as follows:

> to the extent that the periods of delay attributable to grounds specified in paragraph (1) overlap, the period of any adjustment granted under this subsection shall not exceed the actual number of days the issuance of the patent was delayed.

Likewise, 37 CFR 1.703(f) provides that:

> To the extent that periods of delay attributable to the grounds specified in §1.702 overlap, the period of adjustment granted under this section shall not exceed the actual number of days the issuance of the patent was delayed.

As explained in *Explanation of 37 CFR 1.703(f) and of the United States Patent and Trademark Office Interpretation of 35 U.S.C. 154(b)(2)(A)*, 69 Fed. Reg. 34283 (June 21, 2004), the Office interprets 35 U.S.C. 154(b)(2)(A) as permitting either patent term adjustment under 35 U.S.C. 154(b)(1)(A)(i)-(iv), or patent term adjustment under 35 U.S.C. 154(b)(1)(B), but not as permitting patent term adjustment under both 35 U.S.C. 154(b)(1)(A)(i)-(iv) and 154(b)(1)(B). Accordingly, the Office implements the overlap provision as follows:

> If an application is entitled to an adjustment under 35 U.S.C. 154(b)(1)(B), the entire period during which the application was pending (except for periods excluded under 35 U.S.C. 154(b)(1)(B)(i)-(iii)), and not just the period beginning three years after the actual filing date of the application, is the period of delay under 35 U.S.C. 154(b)(1)(B) in determining whether periods of delay overlap under 35 U.S.C. 154(b)(2)(A). Thus, any days of delay for Office issuance of the patent more than 3 years after the filing date of the application, which overlap with the days of patent term adjustment accorded prior to the issuance of the patent will not result in any additional patent term adjustment. See 35 U.S.C. 154(b)(1)(B), 35 U.S.C. 154(b)(2)(A), and 37 CFR § 1.703(f). See *Changes to Implement Patent Term Adjustment Under Twenty Year Term; Final Rule*, 65 Fed. Reg. 54366 (Sept. 18, 2000). See also *Revision of Patent Term Extension and Patent Term Adjustment Provisions; Final Rule*, 69 Fed. Reg. 21704 (April 22, 2004), 1282 Off. Gaz. Pat. Office 100 (May 18, 2004). See also *Explanation of 37 CFR 1.703(f) and of the United States Patent and Trademark Office Interpretation of 35 U.S.C. 154(b)(2)(A)*, 69 Fed. Reg. 34283 (June 21, 2004).

The current wording of § 1.703(f) was revised in response to the misinterpretation of this provision by a number of Patentees. The rule was slightly revised to more closely track the corresponding language of 35 U.S.C. 154(b)(2)(A). The relevant portion differs only to the extent that the statute refers back to provisions of the statute whereas the rule refers back to sections of the rule. This was not a substantive change to the rule nor did it reflect a change of the Office's interpretation of 35 U.S.C. 154(b)(2)(A). As stated in the *Explanation of 37 CFR 1.703(f) and of the United States Patent and Trademark Office Interpretation of 35 U.S.C. 154(b)(2)(A)*, the Office has

consistently taken the position that if an application is entitled to an adjustment under the three-year pendency provision of 35 U.S.C. 154(b)(1)(B), the entire period during which the application was pending before the Office (except for periods excluded under 35 U.S.C. 154(b)(1)(B)(i)-(iii)), and not just the period beginning three years after the actual filing date of the application, is the relevant period under 35 U.S.C. 154(b)(1)(B) in determining whether periods of delay "overlap" under 35 U.S.C. 154(b)(2)(A).

This interpretation is consistent with the statute. Taken together the statute and rule provide that to the extent that periods of delay attributable to grounds specified in 35 U.S.C. 154(b)(1) and in corresponding §1.702 overlap, the period of adjustment granted shall not exceed the actual number of days the issuance of the patent was delayed. The grounds specified in these sections cover the A) guarantee of prompt Patent and Trademark Office responses, B) guarantee of no more than 3 year application pendency, and C) guarantee or adjustments for delays due to interference, secrecy orders and appeals. A section by section analysis of 35 U.S.C. 154(b)(2)(A) specifically provides that:

> Section 4402 imposes limitations on restoration of term. In general, pursuant to [35 U.S.C.] 154(b)(2)(A)-(C), total adjustments granted for restorations under [35 U.S.C. 154](b)(1) are reduced as follows: (1) To the extent that there are multiple grounds for extending the term of a patent that may exist simultaneously (e.g., delay due to a secrecy order under [35 U.S.C.] 181 and administrative delay under [35 U.S.C.] 154(b)(1)(A)), the term should not be extended for each ground of delay but only for the actual number of days that the issuance of a patent was delayed; See 145 Cong. Rec. S14,718[1]

As such, the period for over 3 year pendency does not overlap only to the extent that the actual dates in the period beginning three years after the date on which the application was filed overlap with the actual dates in the periods for failure of the Office to take action within specified time frames. In other

---

[1] The AIPA is title IV of the Intellectual Property and Communications Omnibus Reform Act of 1999 (S. 1948), which was incorporated and enacted as law as part of Pub. L. 106-113. The Conference Report for H.R. 3194, 106th Cong. 1st Sess. (1999), which resulted in Pub. L. 106-113, does not contain any discussion (other than the incorporated language) of S. 1948. A section-by-section analysis of S. 1948, however, was printed in the Congressional Record at the request of Senator Lott, See 145 Cong. Rec. S14,708-26 (1999)(daily ed. Nov. 17, 1999).

words, consideration of the overlap does not begin three years after the filing date of the application. Patentees are incorrect in treating the relevant period as starting on April 9, 2006, the date that is 3 years after the actual filing date of the application.

In this instance, the relevant period under 35 U.S.C. 154(b)(1)(B) in determining whether periods of delay "overlap" under 35 U.S.C. 154(b)(2)(A) is the entire period during which the application was pending before the Office, April 8, 2003 to November 18, 2008. (There were no periods excluded under 35 U.S.C. 154(b)(1)(B)(i)-(iii)). 652 days of patent term adjustment were accorded prior to the issuance of the patent for the Office failing to respond within specified time frames during the pendency of the application. All of these 652 days overlap with the 955 days for Office delay in issuing the patent. Given the 652 days of Office delay and the 244 days of applicant delay, the application issued three years and 955 days after its filing date. The Office did not delay 652 days and then 955 days. Entry of both periods is not warranted. Accordingly, at issuance, the Office properly entered 303 days (955 - 652 days) additional days of patent term adjustment for the Office taking in excess of 3 years to issue the patent.

In view thereof, the Office affirms that the correct revised determination of patent term adjustment at the time of the issuance of the patent is 711 days.

Telephone inquiries specific to this matter should be directed to Shirene Willis Brantley, Senior Petitions Attorney, at (571) 272-3230.

Nancy Johnson
Senior Petitions Attorney
Office of the Deputy Commissioner
for Patent Examination Policy

UNITED STATES PATENT AND TRADEMARK OFFICE

Commissioner for Patents
United States Patent and Trademark Office
P.O. Box 1450
Alexandria, VA 22313-1450
www.uspto.gov

DAVIS WRIGHT TREMAINE, LLP
1201 Third Avenue, Suite 2200
SEATTLE WA 98101-3045

COPY MAILED

JUL 23 2007

OFFICE OF PETITIONS

In re Application of :
Paeper, et al. :
Application No. 10/408,168 : ON PETITION
Filed: April 3, 2003 :
Attorney Docket No. 60117-118 // :
31173/40014

This is a decision on the petition under 37 CFR 1.137(b), filed on February 28, 2007, to revive the above-identified application.

The petition is **GRANTED**.

This application became abandoned for failure to properly respond to the final Office action mailed August 25, 2006, which set an extendable three month period for reply. Applicants submitted an amendment after final on November 20, 2006. The amendment after final failed to place this application in *prima facie* condition for allowance, as was explained in the December 19, 2006 Advisory action. Accordingly, this application became abandoned on November 26, 2006. The filing of the present petition precedes the mailing of A Notice of Abandonment.

Applicants have submitted a RCE with $790.00 fee and a request to consider the amendment previously filed on November 20, 2006 as the reply to the August 25, 2006 final Office action, an acceptable statement of the unintentional nature of the delay in responding to the August 25, 2006 final Office action, and the $1,500.00 petition fee.

The statement of unintentional delay was not signed by a person who would have been in a position of knowing that the delay in filing a timely response was unintentional. In the event that practitioner has no knowledge that the delay was in fact unintentional, practitioner should make a reasonable inquiry to ascertain that, in fact, the delay was unintentional. If practitioner discovers that the delay was intentional, practitioner must so notify the Office.

It does not appear that the person signing the petition has been empowered. A change of address should be filed in this case in accordance with MPEP 601.03. A courtesy copy of this decision is

being mailed to the address noted on the petition. However, until otherwise instructed, all future correspondence regarding this application will be mailed solely to the address of record.

After the mailing of this decision the application will be forwarded to Technology Center AU 1634 for further examination.

Telephone inquiries pertaining to this decision may be directed to the undersigned at (571) 272-3230.

Shirene Willis Brantley
Senior Petitions Attorney
Office of Petitions

CC: NABEELA R. MCMILLIAN
MARSHALL, GERSTEIN & BORUN LLP
233 S. WACKER DRIVE, SUITE 6300
SEARS TOWER
CHICAGO IL 60606-6357

UNITED STATES PATENT AND TRADEMARK OFFICE

COMMISSIONER FOR PATENTS
UNITED STATES PATENT AND TRADEMARK OFFICE
P.O. BOX 1450
ALEXANDRIA, VA 22313-1450
www.uspto.gov

Paper No. 7

KEELING HUDSON LLC
P.O. BOX 70103
HOUSTON TX 77270

COPY MAILED

FEB 1 0 2004

OFFICE OF PETITIONS

In re Application of
Kenneth Lohr
Application No. 10/408,173
Filed: April 4, 2003
Attorney Docket No. None

DECISION GRANTING PETITION
UNDER 37 CFR 1.137(b)

This is a decision on the petition, filed July 28, 2003, which is being treated as a petition under 37 CFR 1.137(b) to revive the instant nonprovisional application for failure to timely notify the U.S. Patent and Trademark (USPTO) of the filing of an application in a foreign country, or under a multinational treaty that requires publication of applications eighteen months after filing. *See* 37 CFR 1.137(f).

The petition is **GRANTED**.

Petitioner states that the instant nonprovisional application is the subject of an application filed in an eighteen month publication country on April 4, 2003. However, the USPTO was unintentionally not notified of this filing within 45 days subsequent to the filing of the subject application in an eighteen month publication country.

In view of the above, this application became abandoned pursuant to 35 U.S.C. § 122(b)(2)(B)(iii) and 37 CFR 1.213(c) for failure to timely notify the Office of the filing of an application in a foreign country or under a multilateral international agreement that requires publication of applications 18 months after filing.

A petition to revive an application abandoned pursuant to 35 U.S.C. 122(b)(2)(B)(iii) for failure to notify the USPTO of a foreign filing must be accompanied by:

(1) the required reply which is met by the notification of such filing in a foreign country or under a multinational treaty;
(2) the petition fee as set forth in 37 CFR 1.17(m); and
(3) a statement that the entire delay in filing the required reply from the due date of the reply until the filing of a grantable petition was unintentional.

The instant petition has been found to be in compliance with 37 CFR 1.137(b). Accordingly, the failure to timely notify the USPTO of a foreign or international filing within 45 days after the date of filing of such foreign or international application as provided by 35 U.S.C. § 122(b)(2)(B)(iii) and 37 CFR 1.213(c) is accepted as having been unintentionally delayed.

A review of the application file record does not indicate a change of address has been filed in this case; however, the address given on the petition differs from the address of record. If appropriate, a change of address should be filed in this case in accordance with MPEP 601.03. A courtesy copy of this decision is being mailed to the address noted on the petition. However,

until otherwise instructed, all future correspondence regarding this application will be mailed solely to the address of record.

Any inquiries concerning this decision may be directed to Sherry D. Brinkley at (703) 305-9220.

This application is being forwarded to Technology Center Art Unit 3679 for examination in due course.

Sherry D. Brinkley
Petitions Examiner
Office of Petitions
Office of the Deputy Commissioner
for Patent Examination Policy

cc:

KENNETH A. KEELING
KEELIN HUDSON L.L.C.
901 NORTH POST OAK ROAD
HOUSTON, TX 77024-2845

UNITED STATES PATENT AND TRADEMARK OFFICE

Commissioner for Patents
United States Patent and Trademark Office
P.O. Box 1450
Alexandria, VA 22313-1450
www.uspto.gov

RUEDGER RUBBERT
LINGUALCARE, INC.
SUITE 150
5339 ALPHA ROAD
DALLAS, TX 75240

COPY MAILED

APR 16 2007

OFFICE OF PETITIONS

In re Application of	:	
Weise Thomas et al	:	
Application No. 10/408,195	:	DECISION ON PETITION
Filed: April 8, 2003	:	TO WITHDRAW
Attorney Docket No. 071879.00002	:	FROM RECORD
	:	

This is a decision on the Request to Withdraw as attorney or agent under 37 C.F.R. § 1.36(b) filed July 11, 2006.

The request is **NOT APPROVED**.

A review of the file record indicates that Jeffrey Whittle does not have power of attorney in this patent application. See 37 C.F.R. § 10.40. Accordingly, the request to withdraw under 37 C.F.R. § 1.36(b) is not applicable.

All future communications from the Office will continue to be directed to the above-listed address until otherwise properly notified by the applicant.

Telephone inquires concerning this decision should be directed to Irvin Dingle at 571-272-3210.

Irvin Dingle
Petitions Examiner
Office of Petitions

cc: Jeffrey Whittle
Bracewell & Giuliani LLP
711 Louisiana Street
Suite 2300
Houston, TX 77002

UNITED STATES PATENT AND TRADEMARK OFFICE

UNITED STATES DEPARTMENT OF COMMERCE
United States Patent and Trademark Office
Address: COMMISSIONER FOR PATENTS
P.O. Box 1450
Alexandria, Virginia 22313-1450
www.uspto.gov

APPL NO.	FILING OR 371 (c) DATE	ART UNIT	FIL FEE REC'D	ATTY.DOCKET NO	DRAWINGS	TOT CLMS	IND CLMS
10/408,199	04/05/2003	2626	1290	200206800-1	9	36	6

CONFIRMATION NO. 5749

CORRECTED FILING RECEIPT

OC000000011506736

HEWLETT-PACKARD DEVELOPMENT COMPANY
Intellectual Property Administration
P.O. Box 272400
Fort Collins, CO 80527-2400

Date Mailed: 12/16/2003

Receipt is acknowledged of this regular Patent Application. It will be considered in its order and you will be notified as to the results of the examination. Be sure to provide the U.S. APPLICATION NUMBER, FILING DATE, NAME OF APPLICANT, and TITLE OF INVENTION when inquiring about this application. Fees transmitted by check or draft are subject to collection. Please verify the accuracy of the data presented on this receipt. **If an error is noted on this Filing Receipt, please write to the Office of Initial Patent Examination's Filing Receipt Corrections, facsimile number 703-746-9195. Please provide a copy of this Filing Receipt with the changes noted thereon. If you received a "Notice to File Missing Parts" for this application, please submit any corrections to this Filing Receipt with your reply to the Notice. When the USPTO processes the reply to the Notice, the USPTO will generate another Filing Receipt incorporating the requested corrections (if appropriate).**

Applicant(s)

Dongli Yang, Vancouver, WA;
Yifeng Wu, Vancouver, WA;
Philip B. Cowan, Vancouver, WA;

Domestic Priority data as claimed by applicant

Foreign Applications

If Required, Foreign Filing License Granted: 06/09/2003

Projected Publication Date: 10/07/2004

Non-Publication Request: No

Early Publication Request: No

Title

Online bi-directional color calibration

Preliminary Class

358

LICENSE FOR FOREIGN FILING UNDER
Title 35, United States Code, Section 184
Title 37, Code of Federal Regulations, 5.11 & 5.15

GRANTED

The applicant has been granted a license under 35 U.S.C. 184, if the phrase "IF REQUIRED, FOREIGN FILING LICENSE GRANTED" followed by a date appears on this form. Such licenses are issued in all applications where the conditions for issuance of a license have been met, regardless of whether or not a license may be required as set forth in 37 CFR 5.15. The scope and limitations of this license are set forth in 37 CFR 5.15(a) unless an earlier license has been issued under 37 CFR 5.15(b). The license is subject to revocation upon written notification. The date indicated is the effective date of the license, unless an earlier license of similar scope has been granted under 37 CFR 5.13 or 5.14.

This license is to be retained by the licensee and may be used at any time on or after the effective date thereof unless it is revoked. This license is automatically transferred to any related applications(s) filed under 37 CFR 1.53(d). This license is not retroactive.

The grant of a license does not in any way lessen the responsibility of a licensee for the security of the subject matter as imposed by any Government contract or the provisions of existing laws relating to espionage and the national security or the export of technical data. Licensees should apprise themselves of current regulations especially with respect to certain countries, of other agencies, particularly the Office of Defense Trade Controls, Department of State (with respect to Arms, Munitions and Implements of War (22 CFR 121-128)); the Office of Export Administration, Department of Commerce (15 CFR 370.10 (j)); the Office of Foreign Assets Control, Department of Treasury (31 CFR Parts 500+) and the Department of Energy.

NOT GRANTED

No license under 35 U.S.C. 184 has been granted at this time, if the phrase "IF REQUIRED, FOREIGN FILING LICENSE GRANTED" DOES NOT appear on this form. Applicant may still petition for a license under 37 CFR 5.12, if a license is desired before the expiration of 6 months from the filing date of the application. If 6 months has lapsed from the filing date of this application and the licensee has not received any indication of a secrecy order under 35 U.S.C. 181, the licensee may foreign file the application pursuant to 37 CFR 5.15(b).

UNITED STATES PATENT AND TRADEMARK OFFICE

Commissioner for Patents
United States Patent and Trademark Office
P.O. Box 1450
Alexandria, VA22313-1450
www.uspto.gov

DR. DANIEL P. MORRIS, ESQ.
IBM CORPORATION
INTELLECTUAL PROPERTY LAW DEPARTMENT
P. O. BOX 218
YORKTOWN HEIGHTS NY 10598

COPY MAILED

JAN 18 2008

OFFICE OF PETITIONS

In re Application of
Brian Samuel Beaman et al.
Application No. 10/408,200
Filed: April 4, 2003
Attorney Docket No. YOR919930028US7

: DECISION ON PETITION
: UNDER 37 CFR 1.78(a)(3)

This is a decision on the petition filed November 30, 2007, under 37 CFR 1.78(a)(3) to accept an unintentionally delayed claim under 35 U.S.C. § 120 for the benefit of the prior-filed non-provisional applications set forth in the concurrently filed amendment. This decision also responds to the petition under 37 CFR 1.182 to expedite the processing of the petition under 37 CFR 1.78(a)(3).

The petition under 37 CFR 1.78(a)(3) is **GRANTED**.
The petition under 37 CFR 1.182 is **GRANTED**.

The petition is **GRANTED**.

A petition for acceptance of a claim for late priority under 37 CFR 1.78(a)(3) is only applicable to those applications filed on or after November 29, 2000. Further, the petition is appropriate only after the expiration of the period specified in 37 CFR 1.78(a)(2)(ii). In addition, the petition under 37 CFR 1.78(a)(3) must be accompanied by:

(1) the reference required by 35 U.S.C. § 120 and 37 CFR 1.78(a)(2)(i) of the prior-filed application, unless previously submitted;
(2) the surcharge set forth in § 1.17(t); and
(3) a statement that the entire delay between the date the claim was due under 37 CFR 1.78(a)(2)(ii) and the date the claim was filed was unintentional. The Director may require additional information where there is a question whether the delay was unintentional.

All of the above requirements having been satisfied, the late claims for priority under 35 U.S.C. § 120 are accepted as being unintentionally delayed.

The granting of the petition to accept the delayed benefit claim to the prior-filed applications under 37 CFR 1.78(a)(3) should not be construed as meaning that this application is entitled to the benefit of the prior-filed applications. In order for this application to be entitled to the benefit of the prior-filed applications, all other requirements under 35 U.S.C. § 120 and 37 CFR 1.78(a)(1) and (a)(2) must be met. Similarly, the fact that the corrected Filing Receipt accompanying this decision on petition includes the prior-filed applications should not be construed as meaning that applicant is entitled to the claim for benefit of priority to the prior-filed applications noted thereon. Accordingly, the examiner will, in due course, consider this benefit claim and determine whether the application is entitled to the benefit of the earlier filing date.

A corrected Filing Receipt, which includes the priority claim to the prior-filed nonprovisional applications, accompanies this decision on petition.

The fee in the amount of $400 for expedited handling of the instant petition under 37 CFR 1.182 has been charged to deposit account no. 09-0468 as per the authorization indicated in the petition. As well, the fee for the petition under 37 CFR 1.78 in the amount of $200 has been charged to deposit account no. 09-0468.

Any inquiries concerning this decision may be directed to Senior Petitions Attorney Patricia Faison-Ball at (571) 272-3212. All other inquiries concerning either the examination procedures or status of the application should be directed to the Technology Center.

This matter is being referred to Technology Center Art Unit 2829 for consideration by the examiner of applicant's entitlement to claim benefit of priority under 35 U.S.C. § 120 to the prior-filed applications.

Anthony Knight
Supervisor
Office of Petitions

filed before Sept 2004

IN THE UNITED STATES PATENT AND TRADEMARK OFFICE

In re Application of Applicants: Beaman et al.

Date: November 30, 2007

Group Art Unit: 2829

Serial No.: 10/408,200

Examiner: Ernest F. Karlsen

Filed: April 4, 2003

Docket No.: YOR919930028US7

For: HIGH DENSITY INTEGRATED CIRCUIT APPARATUS, TEST PROBE AND METHODS OF USE THEREOF

Commissioner for Patents
P.O. Box 1450
Alexandria, VA 22313-1450

PETITION FOR CORRECTED CLAIM OF PRIORITY UNDER 37 CFR 1.78 AND PETITION FOR CORRECTED FILING RECEIPT

Sir,

Applicants petition to amend the claim of priority to be the claim of priority as amended by applicant's Amendment submitted herewith.

10/408,200 4/4/03
09/921,867 8/3/01
Pat 08/872,519 6/11/97
Pat 08/754,869 11/22/96
pat 08/055,485 4/30/93
Pat 07/963,346 10/19/92

Applicants petitions to amend the claim of priority to be:

> This application is a Division of application Serial Number 09/921,867 filed on 08-3-2001 now pending, which is a Continuation of application Serial Number 08/872,519 filed on 06-11-1997, patented as 6,334,247, which is a Division of application Serial Number 08/754,869 filed on 11-22-1996, patented as 5,821,763, which is a continuation of application Serial Number 08/055,485 filed on 04-30-1993, patented as 5,635,846, which is a Continuation-in-part of application Serial Number 07/963,346 filed on 10-19-1992, patented as 5,371,654..

The entire delay between the date the claim was due under 37 CFR 1.78(a)(2)(ii) and the date the claim was field was unintentional.

Please charge any fee necessary to enter this paper and any previous paper to deposit account 09-0468.

Respectfully submitted,

By: /Daniel P. Morris/

Dr. Daniel P. Morris, Esq.
Reg. No. 32,053
Phone No. (914) 945-3217

IBM Corporation
Intellectual Property Law Dept.
P. O. Box 218
Yorktown Heights, New York 10598

IN THE SPECIFICATION

At page 1 after the title add:

This application is a Division of application Serial Number 09/921,867 filed on 08-3-2001 now pending, which is a Continuation of application Serial Number 08/872,519 filed on 06-11-1997, patented as 6,334,247, which is a Division of application Serial Number 08/754,869 filed on 11-22-1996, patented as 5,821,763, which is a continuation of application Serial Number 08/055,485 filed on 04-30-1993, patented as 5,635,846, which is a Continuation-in-part of application Serial Number 07/963,346 filed on 10-19-1992, patented as5,371,654.

US 20050062492A1

(19) United States

(12) Patent Application Publication (10) Pub. No.: US 2005/0062492 A1

Beaman et al. (43) Pub. Date: Mar. 24, 2005

(54) HIGH DENSITY INTEGRATED CIRCUIT APPARATUS, TEST PROBE AND METHODS OF USE THEREOF

(76) Inventors: Brian Samuel Beaman, Hyde Park, NY (US); Keith Edward Fogel, Bardonia, NY (US); Paul Alfred Lauro, Nanuet, NY (US); Maurice Heathcote Norcott, Valley Cottage, NY (US); Da-Yuan Shih, Poughkeepsie, NY (US); George Frederick Walker, New York, NY (US)

Correspondence Address:
Dr. Daniel P. Morris, Esq.
IBM Corporation
Intellectual Property Law Department
P. O. Box 218
Yorktown Heights, NY 10598 (US)

(21) Appl. No.: 10/408,200

(22) Filed: Apr. 4, 2003

Related U.S. Application Data

(62) Division of application No. 09/921,867, filed on Aug. 3, 2001.

Publication Classification

(51) Int. Cl.[7] H05K 1/00; G01R 31/02; G01R 31/26

(52) U.S. Cl. 324/765; 174/250; 324/537; 324/754

(57) ABSTRACT

The present invention is directed to a high density test probe which provides a means for testing a high density and high performance integrated circuits in wafer form or as discrete chips. The test probe is formed from a dense array of elongated electrical conductors which are embedded in an compliant or high modulus elastomeric material. A standard packaging substrate, such as a ceramic integrated circuit chip packaging substrate is used to provide a space transformer. Wires are bonded to an array of contact pads on the surface of the space transformer. The space transformer formed from a multilayer integrated circuit chip packaging substrate. The wires are as dense as the contact location array. A mold is disposed surrounding the array of outwardly projecting wires. A liquid elastomer is disposed in the mold to fill the spaces between the wires. The elastomer is cured and the mold is removed, leaving an array of wires disposed in the elastomer and in electrical contact with the space transformer The space transformer can have an array of pins which are on the opposite surface of the space transformer opposite to that on which the elongated conductors are bonded. The pins are inserted into a socket on a second space transformer, such as a printed circuit board to form a probe assembly. Alternatively, an interposer electrical connector can be disposed between the first and second space transformer.

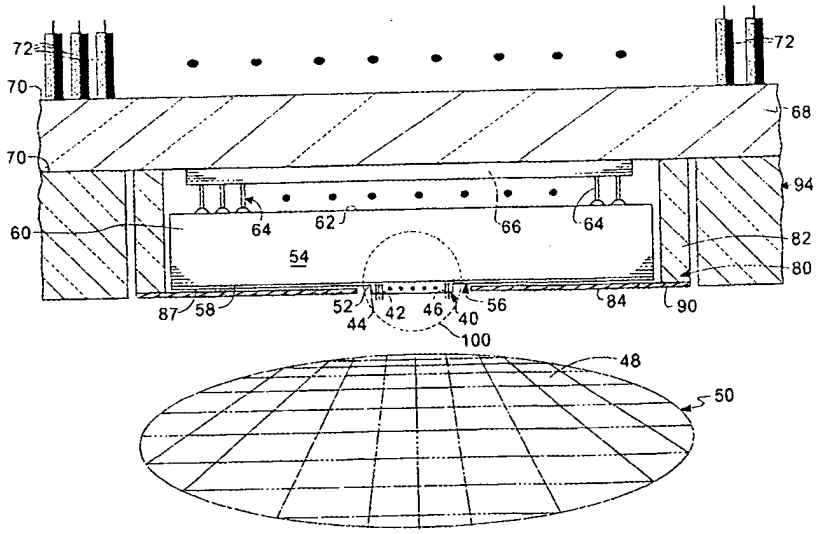

HIGH DENSITY INTEGRATED CIRCUIT APPARATUS, TEST PROBE AND METHODS OF USE THEREOF

FIELD OF THE INVENTION

This invention relates to an apparatus and test probe for integrated circuit devices and methods of use thereof.

BACKGROUND OF THE INVENTION

In the microelectronics industry, before integrated circuit (IC) chips are packaged in an electronic component, such as a computer, they are tested. Testing is essential to determine whether the integrated circuit's electrical characteristics conform to the specifications to which they were designed to ensure that electronic component performs the function for which it was designed.

Testing is an expensive part of the fabrication process of contemporary computing systems. The functionality of every I/O for contemporary integrated circuit must be tested since a failure to achieve the design specification at a single I/O can render an integrated circuit unusable for a specific application. The testing is commonly done both at room temperature and at elevated temperatures to test

Continuity/Reexam Information for 10/408200

Parent Data
10408200, filed 04/04/2003
is a division of 09921867, filed 08/03/2001

Child Data
11929754 , filed on 10/30/2007 is a division of 10408200 , filed on 04/04/2003
11929697 , filed on 10/30/2007 is a division of 10408200 , filed on 04/04/2003
11929899 , filed on 10/30/2007 is a division of 10408200 , filed on 04/04/2003
11929711 , filed on 10/30/2007 is a division of 10408200 , filed on 04/04/2003
11929982 , filed on 10/30/2007 is a division of 10408200 , filed on 04/04/2003
11929634 , filed on 10/30/2007 is a division of 10408200 , filed on 04/04/2003
11930026 , filed on 10/30/2007 is a division of 10408200 , filed on 04/04/2003
11929934 , filed on 10/30/2007 is a division of 10408200 , filed on 04/04/2003
11929821 , filed on 10/30/2007 is a division of 10408200 , filed on 04/04/2003
11929962 , filed on 10/30/2007 is a division of 10408200 , filed on 04/04/2003
11930033 , filed on 10/30/2007 is a division of 10408200 , filed on 04/04/2003
11929783 , filed on 10/30/2007 is a division of 10408200 , filed on 04/04/2003
11929924 , filed on 10/30/2007 is a division of 10408200 , filed on 04/04/2003
11929944 , filed on 10/30/2007 is a division of 10408200 , filed on 04/04/2003
11930019 , filed on 10/30/2007 is a division of 10408200 , filed on 04/04/2003
11929873 , filed on 10/30/2007 is a division of 10408200 , filed on 04/04/2003
11929883 , filed on 10/30/2007 is a division of 10408200 , filed on 04/04/2003
11930039 , filed on 10/30/2007 is a division of 10408200 , filed on 04/04/2003
11930045 , filed on 10/30/2007 is a division of 10408200 , filed on 04/04/2003
11929662 , filed on 10/30/2007 is a division of 10408200 , filed on 04/04/2003
11929736 , filed on 10/30/2007 is a division of 10408200 , filed on 04/04/2003
11930010 , filed on 10/30/2007 is a division of 10408200 , filed on 04/04/2003
11929911 , filed on 10/30/2007 is a division of 10408200 , filed on 04/04/2003
11929676 , filed on 10/30/2007 is a division of 10408200 , filed on 04/04/2003
11929956 , filed on 10/30/2007 is a division of 10408200 , filed on 04/04/2003
11929976 , filed on 10/30/2007 is a division of 10408200 , filed on 04/04/2003
11929999 , filed on 10/30/2007 is a division of 10408200 , filed on 04/04/2003
11930016 , filed on 10/30/2007 is a division of 10408200 , filed on 04/04/2003
11929968 , filed on 10/30/2007 is a division of 10408200 , filed on 04/04/2003
11929768 , filed on 10/30/2007 is a division of 10408200 , filed on 04/04/2003
11929839 , filed on 10/30/2007 is a division of 10408200 , filed on 04/04/2003
11929806 , filed on 10/30/2007 is a division of 10408200 , filed on 04/04/2003
11929991 , filed on 10/30/2007 is a division of 10408200 , filed on 04/04/2003
11930005 , filed on 10/30/2007 is a division of 10408200 , filed on 04/04/2003
11929853 , filed on 10/30/2007 is a division of 10408200 , filed on 04/04/2003

Search Another: Application # Search
or Patent# Search
or PG PUBS #

PCT / / Search Search

Attorney Docket # Search

Bar Code # Search

To go back, right click here and select Back. To go forward, right click here and select Forward. To refresh, right click here and select Refresh.

Back to OASIS | Home page

UNITED STATES PATENT AND TRADEMARK OFFICE

Commissioner for Patents
United States Patent and Trademark Office
P.O. Box 1450
Alexandria, VA 22313-1450
www.uspto.gov

OBLON SPIVAK McCLELLAND
MAIER & NEUSTADT PC
1940 DUKE STREET
ALEXANDRIA, VA 22314

COPY MAILED

MAR 2 4 2005

OFFICE OF PETITIONS

In re Application of	:
Masamichi Yamada	:
Application No. 10/408,224	: DECISION GRANTING PETITION
Filed: April 8, 2003	: UNDER 37 CFR 1.313(c)(2)
Attorney Docket No. 236342US3	:

This is a decision on the petition, filed March 23, 2005, under 37 CFR 1.313(c)(2) to withdraw the above-identified application from issue after payment of the issue fee.

The petition is **GRANTED**.

The above-identified application is withdrawn from issue for consideration of a submission under 37 CFR 1.114 (request for continued examination). See 37 CFR 1.313(c)(2).

Petitioner is advised that the issue fee paid on March 7, 2005 in the above-identified application cannot be refunded. If, however, the above-identified application is again allowed, petitioner may request that it be applied towards the issue fee required by the new Notice of Allowance.[1]

As authorized, fees totaling $2,720 will be charged to petitioner's credit card.

Telephone inquiries should be directed to the undersigned at (571) 272-3218.

This matter is being referred to Technology Center AU 2852 for processing of the request for continued examination under 37 CFR 1.114 and for consideration of the concurrently filed amendment.

Frances Hicks
Petitions Examiner
Office of Petitions
Office of the Deputy Commissioner
for Patent Examination Policy

---

[1] *The request to apply the issue fee to the new Notice may be satisfied by completing and returning the new Issue Fee Transmittal Form PTOL-85(b), which includes the following language thereon: "Commissioner for Patents is requested to apply the Issue Fee and Publication Fee (if any) or re-apply any previously paid issue fee to the application identified above." Petitioner is advised that, whether a fee is indicated as being due or not, the Issue Fee Transmittal Form* **must** *be completed and timely submitted to avoid abandonment. Note the language in bold text on the first page of the Notice of Allowance and Fee(s) Due (PTOL-85).*

UNITED STATES PATENT AND TRADEMARK OFFICE

Commissioner for Patents
United States Patent and Trademark Office
P.O. Box 1450
Alexandria, VA 22313-1450
www.uspto.gov

MAILED

OCT 13 2005

DIRECTOR'S OFFICE
TECHNOLOGY CENTER 2600

OBLON, SPIVAK, MCCLELLAND, MAIER &
NEUSTADT, P.C.
1940 DUKE STREET
ALEXANDRIA VA 22314

In re Application of
Timothy C. Shirley
Application No. 10/408,250
Filed: April 8, 2003
For: **PACKET-BASED SWITCH FOR CONTROLLING TARGET COMPUTERS**

DECISION ON PETITION

This is a response to the Petition for Withdrawal of the Holding of Abandonment, filed September 21, 2004, pursuant to 37 C.F.R. § 1.181(a). No fee is required.

The application was held abandoned for failure to respond in a timely manner and effective manner to the Office communication mailed December 17, 2003. A Notice of Abandonment was mailed September 8, 2004.

Petitioner alleges to have timely filed a response to said Office communication on June 17, 2004. In support thereof, Petitioner provided evidence in the way of a copy of the amendment, request for extension of time, credit card transaction details and a date stamped post card receipt which itemizes the receipt of an amendment and request for extension of time on June 17, 2004.

A review of the file records reveals that the original amendment and request for extension of time filed on June 17, 2004 has been located and matched with the file. Further review reveals that the Notice of Abandonment was rescinded, i.e., without formal reply to the subject petition. On August 3, 2005 a final Office communication was mailed.

For the record, applicants' response of June 17, 2004 was received, matched with the file and the holding of abandonment was withdrawn. The petition is **Dismissed as Moot.** Delay in receiving, addressing applicants' petition and any inconvenience caused petitioner are regretted.

In view of the above, the time period for reply will continue to run from the date of the final Office action mailed August 3, 2005. This application is being returned to the Technology Center 2600's central files to await a response to the outstanding final Office action.

Doris To
Special Program Examiner
Technology Center 2600
Communications

UNITED STATES PATENT AND TRADEMARK OFFICE

Commissioner for Patents
United States Patent and Trademark Office
P.O. Box 1450
Alexandria, VA 22313-1450
www.uspto.gov

NOV - 8 2006

COVINGTON & BURLING, LLP
ATTN: PATENT DOCKETING
1201 PENNSYLVANIA AVENUE, N.W.
WASHINGTON DC 20004-2401

In re Application of	:
Robert W. Henderson et al	:
Serial No.: 10/408,255	: PETITION TO MAKE SPECIAL
Filed: April 8, 2003	:
Attorney Docket No.: 024047.330C	:

This is a decision on the petition filed on October 12, 2006 to make the above-identified application special for accelerated examination procedure under 37 C.F.R. § 1.102(d).

The petition to make the application special is **DENIED**.

REGULATION AND PRACTICE

To be eligible for accelerated examination under 37 C.F.R. § 1.102(d) and pursuant to the "Change to Practice for Petitions in Patent Applications to Make Special and for Accelerated Examination" published in the Federal Register on June 26, 2006 (71 Fed. Reg. 36323), the following conditions must be satisfied:

1. The application must be a **newly** filed non-reissue utility or design application filed under 37 CFR 1.111(a);
2. The application, the petition and the required fees must be filed electronically using the USPTO's electronic filing system (EFS), or EFS-web; if not filed electronically, a statement asserting that EFS and EFS-web were not available during the normal business hours;
3. The application, at the time of filing, must be complete under 37 CFR 1.51 and in condition for examination;
4. The application must contain three or fewer independent claims and twenty or fewer total claims and the claims must be directed to a single invention.

The application as filed is not eligible for the accelerated examination under 37 C.F.R. § 1.102(d) because it was not a new application at the time the petition was filed and was not filed electronically. In addition, the petition attached to the transmittal letter is from a different

application and was filed more than 10 years ago. There is no disclosed relationship between that application and the current application according to Office records.

For the above-stated reasons, the petition is denied. The application will therefore be taken up by the examiner for action in its regular turn.

Any inquiry regarding this decision should be directed to William R. Dixon, Jr., Special Program Examiner, at (571) 272-0519.

William R. Dixon, Jr.
Special Program Examiner
Technology Center 5000

UNITED STATES PATENT AND TRADEMARK OFFICE

#5

COMMISSIONER FOR PATENTS
UNITED STATES PATENT AND TRADEMARK OFFICE
P.O. BOX 1450
ALEXANDRIA, VA 22313-1450
www.uspto.gov

MAILED
FROM DIRECTORS OFFICE

SEP 24 2004

TECHNOLOGY CENTER 3600

Law Office of Lawrence E Laubscher, Jr.
1160 Spa Rd
Suite 2B
Annapolis, MD 21403

In re Application of
David W. Pratt
Application No. 10/408,272
Filed: April 7, 2003
For: CONTAINER APPARATUS FOR OBJECT TO BE DROPPED

DECISION ON PETITION TO WITHDRAW THE HOLDING OF ABANDONMENT

This is a decision on applicant's renewed petition filed July 12, 2004 to withdraw the holding of abandonment.

The petition is **DISMISSED**.

A review of the file record indicates that the application was held abandoned for failure to timely file a proper response to the Office action dated November 21, 2003 and a Notice to that effect was mailed on June 29, 2004.

Petitioner states that a response was filed on May 13, 2004 by facsimile transmission. The copy of the response submitted with the petition includes a Certificate of Transmission dated May 13, 2004 and a USPTO return facsimile receipt dated the same. However the USPTO return facsimile receipt does not specify what was submitted by applicant. Therefore, applicant must rely on the Certificate of Transmission for proof that a response was timely filed.

Any petition to withdraw the holding of abandonment based upon a Certificate of Transmission by facsimile must include the following requirements:

(1) A copy of the original response bearing a signed Certificate of Transmission which includes the date of signing; and

(2) A statement under 37 CFR 1.8(b)(3) attesting to the personal knowledge of transmitting the *original* response on the date indicated on the Certificate of Transmission (see 37 CFR 1.8 and MPEP 512).

While meeting requirement (1) above the petition fails, under requirement (2), to also include a statement under 37 CFR 1.8(b)(3) attesting to the personal knowledge of sending the original response by facsimile transmission on the date indicated on the certificate, by the person who signed the certificate.

Any request for reconsideration of this decision must be submitted within TWO (2) MONTHS from the mail date of this decision. Extensions of time under 37 CFR 1.136(b) are permitted. The reconsideration request should include a cover letter entitled "Renewed Petition to Withdraw the Holding of Abandonment Under 37 CFR 1.81."

Steven N. Meyers
Special Programs Examiner
Patent Technology Center 3600
(703) 308-3868

SNM/mjz: 9/16/04

UNITED STATES PATENT AND TRADEMARK OFFICE

Commissioner for Patents
United States Patent and Trademark Office
P.O. Box 1450
Alexandria, VA 22313-1450
www.uspto.gov

LAUBSCHER & LAUBSCHER, P.C.
1160 SPA ROAD
SUITE 2B
ANNAPOLIS, MD 21403

COPY MAILED
JUN 29 2006
OFFICE OF PETITIONS

In re Application of :
Wada, et al. :
Application No. 10/408,272 : ON PETITION
Filed: April 7, 2003 :
Attorney Docket No. 23288 :

This is a decision on the renewed petition under 37 CFR 1.181, filed April 14, 2006, to withdraw the holding of abandonment.

The petition is **dismissed** as untimely.

Any request for reconsideration of this decision must be submitted within TWO (2) MONTHS from the mail date of this decision. Extensions of time under 37 CFR 1.136(a) are permitted. The reconsideration request should include a cover letter entitled "Renewed Petition under 37 CFR 1.181."

This application became abandoned for failure to timely file a proper reply to the non-final Office action mailed November 21, 2003. A Notice of Abandonment was mailed on June 29, 2004.

The original petition was filed July 12, 2004 and was dismissed on September 24, 2004. The decision on petition mailed September 24, 2004 set a two-month period for response. Extensions of time were permitted.

Petitioner contends the September 24, 2004 decision on petition was never received. The showing required to establish non-receipt of an Office communication must include a statement from the practitioner stating that the Office communication was not received by the practitioner and attesting to the fact that a search of the file jacket and docket records indicates that the Office communication was not received. A copy of the docket record where the non-received Office communication would have been entered had it been received and docketed must be attached to and referenced in practitioner's statement.

The copy of the docket record where the non-received Office communication would have been entered had it been received and docketed and referenced in practitioner's statement has not been submitted.

As such, the petition must be dismissed as untimely and will not be reviewed on the merits at this time. However, this decision is made without prejudice to reconsideration.

Further correspondence with respect to this matter should be addressed as follows:

By mail: Mail Stop Petition
Commissioner for Patents
Box 1450
Alexandria, VA 22313

By FAX: (571) 273-8300
Attn: Office of Petitions

By hand: Customer Service Window
Randolph Building
401 Dulany Street
Alexandria, VA 22314

Telephone inquiries concerning this matter may be directed to the undersigned at (571) 272-3228.

Edward J. Tannouse
Petitions Attorney
Office of Petitions
Office of the Deputy Commissioner
for Patent Examination Policy

UNITED STATES PATENT AND TRADEMARK OFFICE

Commissioner for Patents
United States Patent and Trademark Office
P.O. Box 1450
Alexandria, VA 22313-1450
www.uspto.gov

LAUBSCHER & LAUBSCHER, P.C.
1160 SPA ROAD
SUITE 2B
ANNAPOLIS, MD 21403

COPY MAILED

SEP 08 2006

OFFICE OF PETITIONS

ON PETITION

In re Application of :
Wada, et al. :
Application No. 10/408,272 :
Filed: April 7, 2003 :
Attorney Docket No. 23288 :

This is a decision on the renewed petition under 37 CFR 1.181, filed July 13, 2006, to withdraw the holding of abandonment.

The petition is GRANTED.

This application became abandoned for failure to timely file a proper reply to the non-final Office action mailed November 21, 2003. A Notice of Abandonment was mailed on June 29, 2004.

Petitioner asserts that a response to the November 21, 2004 Office action and a three (3) month extension of time were submitted by facsimile on May 13, 2004. In support, petitioner has submitted a copy of the originally filed response and extension of time. The response and extension of time include an executed Certificate of Facsimile Transmission under 37 CFR 1.8 dated May 13, 2004. Additionally, petitioner has submitted a copy of the "Transmission Report" that indicates transmission and receipt of the document on May 13, 2004. Furthermore, petitioner has submitted a statement under 37 CFR 1.8(b)(3) by Shelly Hubbard, the person who signed the Certificate of Facsimile Transmission.

Accordingly, the petition is granted and the holding of abandonment is withdrawn.

This application is being forwarded to Technology Center 3600, for review of the response, filed July 12, 2004 (originally filed May 13, 2004).

Telephone inquiries concerning this matter may be directed to the undersigned at (571) 272-3228.

Edward J. Tannouse
Petitions Attorney
Office of Petitions
Office of the Deputy Commissioner
for Patent Examination Policy

UNITED STATES PATENT AND TRADEMARK OFFICE

APR 4 2006

Commissioner for Patents
United States Patent and Trademark Office
P.O. Box 1450
Alexandria, VA 22313-1450

RONALD R. SNIDER
SNIDER & ASSOCIATES.
P.O. BOX 27613
WASHINGTON, D.C. 20038-7613

In re Application of	:
Miharu Nishida et al.	:
Serial No.: 10/408,289	: DECISION ON PETITION
Filed: April 8, 2003	:
Attorney Docket No.: NGB-200-C	:

This letter is in response to applicants' Petition under 37 C.F.R. 1.181 requesting review of the appropriateness of the Finality of the Office action mailed to applicants on 12 October 2005.

BACKGROUND

On 23 February 2005, the examiner mailed to applicants a first Office action rejecting all pending claims 12 - 84 under 35 U.S.C. 103(a) as being obvious over Tokubo et al. in view of Takanabe et al.

On 7 July 2005 applicants filed a response to the Office action arguing primarily that there is insufficient motivation to combine the references since Tokubo et al. disclose a powder while Takanabe et al. teach a liquid.

On 12 October 2005 the examiner mailed a FINAL rejection of all pending claims 12 - 84 under 35 U.S.C. 103(a) arguing that Tokubo et al. do disclose both liquid and semi-liquid formulations such as roll-ons and creams at column 14, lines 63 - 65.

On 06 December 2005 applicants filed a Request for Withdrawal of the Final Office Action because of the examiner's apparent contradiction in arguing that Tokubo et al. reference does not explicitly teach or exemplify the claim combination of succinoglucan and water-swellable clay mineral in the first Office action and then stating in the FINAL Office action that Tokubo et al. do suggest the selection of succinoglucan among other water-soluble substances.

On 12 January 2005 the examiner mailed to applicants an Advisory Action in which the request for withdrawal of the FINALITY of prosecution was not deemed persuasive and the rejection maintained for the reasons of record.

On 24 January 2006 applicants filed the instant Petition requesting that the Director withdraw the FINALITY of the Office action mailed 12 October 2005 on the basis that the examiner has raised a new argument in the FINAL rejection, namely that the primary reference, Tokubo et al., do teach the use of succinoglucan as a water-soluble substance in conjunction with water-swellable clay mineral.

On 08 February 2005 applicants filed new After Final remarks arguing that the examiner has not treated the instant method claims 12 - 84 as true methods, but has constructed rejections as if all of the claims were composition claims.

DISCUSSION

Applicants argue that the examiner has presented an apparent contradiction in arguing that the Tokubo et al. reference does not explicitly teach or exemplify the claimed combination of succinoglucan and water-swellable clay mineral in the first Office action and then stating in the FINAL Office action that Tokubo et al. do suggest the selection of succinoglucan among other water-soluble substances. Because of this apparent change in the examiner's position, applicants plead that they were only able to traverse this argument in the After Final amendment filed 24 January 2006.

This argument has been fully considered but is not deemed persuasive. In the first Office action the examiner did not explicitly state that Tokubo et al does not teach the claimed combination or not teach a liquid. Thus the examiner's reliance on the reference has not materially changed. Takanabe et al were added to more pointedly show the use of a liquid, but was not deemed necessary in the subsequent Office action. No new arguments based on Tokubo et al were made in the Final Office action other than to emphasize or point out specific portions in response to applicants' arguments. There is no real contradiction in the examiner's remarks. In the first Office action, the examiner was simply indicating that Takubo et al. do teach generally a water-swellable clay mineral along with succinoglucan, but that the reference does not exemplify this specific combination nor explicitly describe the specific combination set forth in the claims, but suggests it.

DECISION

Therefore, in view of the above reasons the petition is **DENIED.**

This application will be returned to the examiner for consideration of the additional After Final remarks filed 8 February 2006.

Should there be any questions regarding this decision, please contact Special Program Examiner, William R. Dixon, Jr. by letter addressed to Director, TC 1600, at the address listed above, or by telephone at 571-272-0519 or by facsimile sent to the general Office facsimile number, 571-273-8300.

Bruce M. Kisliuk
Director, Technology Center 1600

UNITED STATES PATENT AND TRADEMARK OFFICE

Commissioner for Patents
United States Patent and Trademark Office
P.O. Box 1450
Alexandria, VA 22313-1450
www.uspto.gov

Steven J. Rosen, Patent Attorney
4729 Cornell Road
Cincinnati, OH 45241

COPY MAILED

SEP 28 2005

OFFICE OF PETITIONS

In re Application of :
Stec et al. :
Application No. 10/408,293 : DECISION ON PETITION
Filed: April 7, 2003 :
Attorney Docket No. 130468 :

This is a decision on the petition under 37 CFR 1.137(a), filed July 11, 2005, to revive the above-identified application abandoned unavoidably, which is being treated as a petition under 37 CFR 1.181, to withdraw the holding of abandonment.

The application became abandoned for failure to respond timely to the final Office action, mailed on November 3, 2004, which set a three-month shortened statutory period to respond. In the apparent absence of a timely filed response, the application was held abandoned on February 4, 2005. The present petition precedes the mailing of the Notice of Abandonment.

Petitioner asserts that he timely submitted a response to the final Office action via facsimile transmission on December 22, 2004. With the present petition, petitioner submitted a copy of the cover sheet, an Auto-Reply Facsimile Transmission, a copy of the response, and an authorization to charge the petition fee.

A review of the copy of the cover sheet reveals that petitioner included the following: the application number; attorney docket number; Examiner's name and telephone number; the USPTO central fax number; the attorney's name, address, telephone number, fax number, and email address; the number of pages being transmitted (21 pages, including the cover sheet); and a certificate of transmission signed by the attorney and dated December 22, 2004. The Auto-Reply Facsimile Transmission shows that 21 pages (including the cover sheet) were received on December 22, 2004 at 12:13:24 PM [EST]. Lastly, the copy of the response, which petitioner states was transmitted to the USPTO but was not received, correctly identified the applicants, application number, filing date, title, attorney docket number, the Group Art Unit, Examiner's name, as well as consisted of 20 pages.

37 CFR 1.8(b) states that in the event that correspondence is considered timely filed by being mailed or transmitted in accordance with paragraph (a) of this section, but not received by the U.S. Patent and Trademark Office, and the application is held to be abandoned or the proceeding dismissed, terminated, or decided with prejudice, the correspondence will be considered timely if the party who forwarded such correspondence:

(1) Informs the Office of the previous mailing or transmission of the correspondence promptly after becoming aware that the Office has no evidence of receipt of the correspondence;

(2) Supplies an additional copy of the previously mailed or transmitted correspondence and certificate, and

(3) Includes a statement, which attests on a personal knowledge basis or to the satisfaction of the Director to the previous timely mailing or transmission. If the correspondence was sent by facsimile transmission, a copy of the sending unit's report confirming transmission may be used to support this statement.

In view of the above, the required reply is considered timely filed pursuant to 37 CFR 1.8. Accordingly, the holding of abandonment is withdrawn and the petition is granted. The application will be restored to pending status. The $500.00 petition fee is unnecessary and will be refunded to counsel's Deposit Account.

This matter is being referred to Technology Center Art Unit 3745.

Telephone inquiries concerning this matter may be directed to the undersigned at (571) 272-3211.

Christina Tartera Donnell

Christina Tartera Donnell
Senior Petitions Attorney
Office of Petitions

UNITED STATES PATENT AND TRADEMARK OFFICE

Commissioner for Patents
United States Patent and Trademark Office
P.O. Box 1450
Alexandria, VA 22313-1450
www.uspto.gov

OSTROLENK FABER GERB & SOFFEN
1180 AVENUE OF THE AMERICAS
NEW YORK, NY 10036-8403

COPY MAILED

JUL 0 2 2008

OFFICE OF PETITIONS

In re Application of	:	
Frank Kappe, et al.	:	
Application No. 10/408,299	:	ON PETITION
Filed: April 4, 2003	:	
Attorney Docket No. P/4348-7	:	

This is a decision on the petition under the unintentional provisions of 37 CFR 1.137(b), filed January 2, 2008, to revive the above-identified application.

The petition is **GRANTED**.

The application became abandoned for failure to timely file a reply within the meaning of 37 CFR 1.113 to the final Office action of July 18, 2006. The proposed reply required for consideration of a petition to revive must be a Notice of Appeal (and appeal fee required by 37 CFR 41.20(b)(2), an amendment that *prima facie* places the application in condition for allowance, a Request for Continued Examination and submission (37 CFR 1.114), or the filing of a continuing application under 37 CFR 1.53(b). See MPEP 711.03(c)(II)(A)(2). No extensions of time pursuant to the provisions of 37 CFR 1.136(a) were obtained. Accordingly, the date of abandonment of this application is October 19, 2006.

The petition satisfies the requirements of 37 CFR 1.137(b) in that petitioner has supplied (1) the reply in the form of a Request for Continued Examination (RCE) and fee of $810, and the submission required by 37 CFR 1.114; (2) the petition fee of $1540; and (3) a proper statement of unintentional delay.

Telephone inquiries concerning this decision should be directed to the undersigned at (571) 272-1642.

This application is being referred to Technology Center AU 2628 for processing of the RCE and for appropriate action by the Examiner in the normal course of business on the amendment submitted in accordance with 37 CFR 1.114.

April M. Wise
Petitions Examiner
Office of Petitions

UNITED STATES PATENT AND TRADEMARK OFFICE

Commissioner for Patents
United States Patent and Trademark Office
P.O. Box 1450
Alexandria, VA 22313-1450
www.uspto.gov

LAW OFFICES OF MIKIO ISHIMARU
333 W. EL CAMINO REAL
SUITE 330
SUNNYVALE CA 94087

COPY MAILED

JAN 3 0 2009

OFFICE OF PETITIONS

ON PETITION

In re Application of	:
Chao et al.	:
Application No. 10/408325	:
Filing or 371(c) Date: 04/08/2003	:
Pat. Num.: 6807483	:
Issue Date: 10/19/2004	:
Attorney Docket Number:	:
59-002	:

This is a notice regarding request for acceptance of a fee deficiency submission under 37 CFR 1.28. On September 1, 1998, the Court of Appeals for the Federal Circuit held that 37 CFR 1.28(c) is the sole provision governing the time for correction of the erroneous payment of the issue fee as a small entity. **See DH Technology v. Synergystex International, Inc. 154 F.3d 1333, 47 USPQ2d 1865 (Fed. Cir. Sept. 1, 1998).**

The Office no longer investigates or rejects original or reissue applications under 37 CFR 1.56. **1098 Off. Gaz. Pat. Office 502 (January 3, 1989)**. Therefore, nothing in this Notice is intended to imply that an investigation was done.

Your fee deficiency submission under 37 CFR 1.28 is hereby **ACCEPTED**.

This application is no longer entitled to small entity status. Accordingly, all future fees paid in this patent must be paid at the large entity rate.

Telephone inquiries concerning this matter should be directed to the undersigned at (571) 272-3232.

/Derek L. Woods/
Derek L. Woods
Attorney
Office of Petitions

UNITED STATES PATENT AND TRADEMARK OFFICE

COMMISSIONER FOR PATENTS
UNITED STATES PATENT AND TRADEMARK OFFICE
P.O. BOX 1450
ALEXANDRIA, VA 22313-1450
www.uspto.gov

Paper No. 4

GEORGE F. HELFRICH
162 SHASTA DR.
NEWPORT NEWS, VA 23608

COPY MAILED

SEP 0 2 2003

OFFICE OF PETITIONS

In re Application of	:	
Ellis	:	
Application No. 10/408,380	:	DECISION GRANTING
Filed: April 7, 2003	:	PETITION
Attorney Docket No. ERE-1	:	

This is a decision on the petition filed August 14, 2003, to establish that Figures 21a-21e were part of the originally filed application.

On April 7, 2003, the application was filed.

On June 10, 2003, the Office of Initial Patent Examination mailed a Notice stating that the application had been accorded a filing date of April 7, 2003, and advising applicants that Figures 5e, 6c, 6d, 6e, 19d, and 21a-21e described in the specification appeared to have been omitted.

In response, the present petition was filed alleging that:
(1) references in the specification to Figures 5e, 6c, 6d, 6e and 19d were made in error and such figures were not in fact filed, and
(2) Figures 21a-21e were filed on April 7, 2003.

As to (1), petitioner states that a preliminary amendment will be filed to correct the specification.

As to (2), petitioner has submitted a postcard receipt which acknowledges receipt of 21 sheets of drawings on April 7, 2003.[1] The file only contains 20 sheets of drawings. Upon review of the record, the sheet containing Figures 21a-21e, deposited on April 7, 2003, has not been located. However, the evidence is convincing that the application papers deposited on April 7, 2003, included Figures 21a-21e, and that the page of drawings containing the figures was subsequently misplaced in the PTO.

In view of the above, the petition is **granted**. The copy of the page of drawings containing Figures 21a-21e, submitted with the petition, will be used for examination purposes.

A refund of the $130 petition fee will be scheduled.

The Notice mailed June 10, 2003, is vacated to the extent the Notice stated that Figures 21a-21e were not present.

---

[1] Evidence of receipt of any correspondence filed in the Patent and Trademark Office can be obtained by submitting a self addressed post card properly itemizing and identifying the paper or papers being filed. Upon receipt of the correspondence, the Patent and Trademark Office will check the listing on the post card against the papers submitted, making sure that all items listed are present and will then stamp the postcard with an Official date stamp and place the post card in the outgoing mail. "A post card receipt which itemizes and properly identifies the papers which are being filed serves as *prima facie* evidence of receipt in the PTO of all items listed thereon by the PTO." M.P.E.P. § 503.

The Application is being returned to the Office of Initial Patent Examination for further processing with a filing date of April 7, 2003, using the application papers filed on April 7, 2003, and the copy of one page of drawings containing Figures 21a-21e filed on August 14, 2003.

Telephone inquiries should be directed to Petitions Attorney Steven Brantley at (703) 306-5683.

Charles Steven Brantley
Petitions Attorney
Office of Petitions

UNITED STATES PATENT AND TRADEMARK OFFICE

COMMISSIONER FOR PATENTS
UNITED STATES PATENT AND TRADEMARK OFFICE
WASHINGTON, D.C. 20231
www.uspto.gov

PAPER NO. 10

jc997 U.S. PTO
10/408394
04/07/03

Kevin K. Johanson
Workman Nydegger & Seeley
1000 Eagle Gate Tower
60 East South Temple
Salt Lake City, Utah 84111

COPY MAILED

AUG 2 7 2001

OFFICE OF PETITIONS

In re Application of :
Douglas A. Sward et al :
Application No. 09/658,140 : DECISION GRANTING
Filed: September 8, 2000 :STATUS UNDER 37 CFR 1.47(a)
Attorney Docket No: 11960.2973 :
:

This is in response to the petition under 37 CFR 1.47(a), filed August 23, 2001, requesting reconsideration of a decision mailed August 13, 2001, which refused to accord status under 37 CFR 1.47(a).

DOCKETED
Action
Response Due
By OR On 9.4.01
Atty File #

The petition is granted.

Petitioner has shown that the nonsigning inventors (Carlos Rios and Nhan T. Nguyen) have refused to join in the filing of the above-identified application.

The above-identified application and papers have been reviewed and found in compliance with 37 CFR 1.47(a). This application is hereby accorded Rule 1.47(a) status. As provided in Rule 1.47(c), this Office will forward notice of this application's filing to the nonsigning inventors at the addresses given in the petition. Notice of the filing of this application will also be published in the Official Gazette.

Telephone inquiries regarding this decision should be directed to the undersigned at (703) 305-8680.

This application is being forwarded to the Office of Initial Patent Examination Division for preexamination processing

Frances Hicks

Frances Hicks
Petitions Examiner
Office of Petitions
Office of the Deputy Commissioner
for Patent Examination Policy

UNITED STATES PATENT AND TRADEMARK OFFICE

COMMISSIONER FOR PATENTS
UNITED STATES PATENT AND TRADEMARK OFFICE
WASHINGTON, D.C. 20231
www.uspto.gov

COPY MAILED

AUG 2 7 2001

OFFICE OF PETITIONS

Nhan T. Nguyen
172 North B acon Str et, #1
Brighton, Massachusetts 02135

In re Application of
Douglas Alan Sward; Brent Madsen; Carlos Rios; Jeffrey Jones; Robert Yarbrough; and Nhan T. Nguyen
Application No. 09/658,140
Filed: September 8, 2000
For: EXTENDABLE PLANAR DIVERSITY ANTENNA

Dear Mr. Nguyen

You are named as a joint inventor in the above identified United States patent application, filed under the provisions of 35 U.S.C. 116 (United States Code), and 37 CFR 1.47(a), Rules of Practice in Patent Cases. Should a patent be granted on the application you will be designated therein as a joint inventor.

As a named inventor you are entitled to inspect any paper in the file wrapper of the application, order copies of all or any part thereof (at a prepaid cost per 37 CFR 1.19) or make your position of record in the application. Alternatively, you may arrange to do any of the preceding through a registered patent attorney or agent presenting written authorization from you. If you care to join in the application, counsel of record (see below) would presumably assist you. Joining in the application would entail the filing of an appropriate oath or declaration by you pursuant to 37 CFR 1.63.

Telephone inquiries regarding this communication should be directed to the undersigned at (703) 305-8680. Requests for information regarding your application should be directed to the File Information Unit at (703) 308-2733. Information regarding how to pay for and order a copy of the application, or a specific paper in the application, should be directed to Certification Division at (703) 308-9726 or 1 (800) 972-6382 (outside the Washington D.C. area).

Frances Hicks

Frances Hicks
Petitions Examiner
Office of Petitions
Office of the Deputy Commissioner
for Patent Examination Policy

cc:

Kevin K. Johanson
Workman Nydegger & Seeley
1000 Eagle Gate Tower
60 East South Temple
Salt Lake City, Utah 84111

UNITED STATES PATENT AND TRADEMARK OFFICE

COMMISSIONER FOR PATENTS
UNITED STATES PATENT AND TRADEMARK OFFICE
WASHINGTON, D.C. 20231
www.uspto.gov

Carlos Rios
15300 8 Winchester Boulevard
Los Gatos, California 95030

COPY MAILED

AUG 2 7 2001

OFFICE OF PETITIONS

In re Application of
Douglas Alan Sward; Brent Madsen; Carlos Rios; Jeffrey Jones; Robert Yarbrough; and Nhan T. Nguyen
Application No. 09/658,140
Filed: September 8, 2000
For: EXTENDABLE PLANAR DIVERSITY ANTENNA

Dear Mr. Rios:

You are named as a joint inventor in the above identified United States patent application, filed under the provisions of 35 U.S.C. 116 (United States Code), and 37 CFR 1.47(a), Rules of Practice in Patent Cases. Should a patent be granted on the application you will be designated therein as a joint inventor.

As a named inventor you are entitled to inspect any paper in the file wrapper of the application, order copies of all or any part thereof (at a prepaid cost per 37 CFR 1.19) or make your position of record in the application. Alternatively, you may arrange to do any of the preceding through a registered patent attorney or agent presenting written authorization from you. If you care to join in the application, counsel of record (see below) would presumably assist you. Joining in the application would entail the filing of an appropriate oath or declaration by you pursuant to 37 CFR 1.63.

Telephone inquiries regarding this communication should be directed to the undersigned at (703) 305-8680. Requests for information regarding your application should be directed to the File Information Unit at (703) 308-2733. Information regarding how to pay for and order a copy of the application, or a specific paper in the application, should be directed to Certification Division at (703) 308-9726 or 1 (800) 972-6382 (outside the Washington D.C. area).

Frances Hicks
Frances Hicks
Petitions Examiner
Office of Petitions
Office of the Deputy Commissioner
for Patent Examination Policy

cc:

Kevin K. Johanson
Workman Nydegger & Seeley
1000 Eagle Gate Tower
60 East South Temple
Salt Lake City, Utah 84111

UNITED STATES PATENT AND TRADEMARK OFFICE

COMMISSIONER FOR PATENTS
UNITED STATES PATENT AND TRADEMARK OFFICE
P.O. BOX 1450
ALEXANDRIA, VA 22313-1450
WWW.USPTO.GOV

Paper No. 5

EDWARD M. LIVINGSTON, ESQ.
963 TRAIL TERRACE DR.
NAPLES FL 34103

COPY MAILED

JUL 0 2 2004

OFFICE OF PETITIONS

In re Application of
William J. Markie
Application No. 10/408,395
Filed: April 5, 2003
Attorney Docket No. 02-5186
Title: RETRACTABLE AIRFOIL VESSEL

DECISION ON PETITION

This is a decision on the petition filed July 7, 2003, requesting that the above-identified application be accorded a filing date of April 5, 2003, with Figures three and four (3 and 4) as a part of the original disclosure of the application.

The application was filed on April 5, 2003. However, on June 10, 2003, the Office of Initial Patent Examination mailed a notice stating that the application had been accorded a filing date of April 5, 2003, and advising applicants that the application appeared to have been deposited without Figures three and four (3 and 4).

Petitioners allege that Figures three and four (3 and 4) were filed on April 5, 2003. In support, the petitioner sets forth a cover letter which was included on filing, as well as a copy of his stamped postcard receipt. The former lists "Five (5) Sheets of Drawings," the latter lists "Five (5) Drawings."

The argument and evidence presented are not persuasive. The PTO file is the official record of the papers originally filed in this application. A review of the official file reveals Figures one through two as well as five through ten (1-2 and 5-10), but not Figures three and four (3 and 4). An applicant alleging that a paper was filed in the Office and later misplaced has the burden of proving the allegation by convincing evidence.

The cover letter cannot serve as convincing evidence that the items listed therein were received by the Office. The PTO has a well established and well publicized practice of providing a receipt for papers filed in the PTO to any applicant desiring a receipt. The practice requires that any paper for which a receipt is desired be filed in the PTO with a self-addressed postcard identifying the paper. A postcard receipt which *itemizes and properly identifies* the papers which

are being filed serves as prima facie evidence of receipt in the PTO of all the items listed thereon on the date stamped thereon by the PTO[1].

When the PTO receives an application, the person who receives the item will compare the postcard to the item being filed to ensure that they are properly identified and that all the items listed on the postcard were received in the USPTO. If any of the items listed on the postcard are not being submitted to the USPTO, those items will be crossed off and the postcard initialed by the person receiving the items[2]. As such, the Office does not denote on the postcard if items were received which do not appear on the postcard – notations are made only when items appear on the postcard which were not received.

The postcard receipt which has been submitted in this case is not properly itemized, in that it lists that five (5) drawings were included on filing. In actuality, eight (8) drawings were included: Figures one through two as well as five through ten (1-2 and 5-10). While the omission of the word "sheets" or "pages" from the postcard may have been a typographical error, absence of an annotation on the postcard receipt is not convincing evidence that five (5) sheets of drawings were present on filing.

For these reasons, the petition under 37 CFR 1.53(b) is dismissed.

Figures three and four (3 and 4), submitted with the instant petition, will not be entered. If petitioner desires for the examiner to consider these two (2) missing pages which were not submitted as part of the original disclosure, then petitioner may submit those pages as an amendment. Any such amendment will, of course, be reviewed by the examiner for new matter[3]. The amendment is not new matter if the substance was a part of the disclosure of the prior application

The rules and statutory provisions governing the operations of the US Patent and Trademark Office require payment of a fee on filing each petition[4]. Payment of the $130.00 petition fee is acknowledged. The petition fee of $130.00 will not be refunded, as this petition was not necessitated by any error on the part of the Office.

The application is being returned to the Office of Initial Patent Examination for further processing with a filing date of April 5, 2003, using only the drawings filed on that date.

Telephone inquiries specific to this matter should be directed to the undersigned at (703) 305-0011.

Paul Shanoski
Senior Attorney
Office of Petitions
United States Patent and Trademark Office

1 See MPEP 503.

2 Id.

3 See MPEP 608.02(a).

4 35 USC §41(a)(7).

UNITED STATES PATENT AND TRADEMARK OFFICE

UNITED STATES DEPARTMENT OF COMMERCE
United States Patent and Trademark Office
Address: COMMISSIONER FOR PATENTS
P.O. Box 1450
Alexandria, Virginia 22313-1450
www.uspto.gov

CESARI AND MCKENNA, LLP
88 BLACK FALCON AVENUE
BOSTON, MA 02210

Mail Date: 05/04/2010

Applicant	: Mark Muhlestein	: DECISION ON REQUEST FOR
Patent Number	: 7647461	: RECALCULATION of PATENT
Issue Date	: 01/12/2010	: TERM ADJUSTMENT IN VIEW
Application No	: 10/408,399	: OF WYETH AND NOTICE OF INTENT TO
Filed	: 04/07/2003	: ISSUE CERTIFICATE OF CORRECTION
		:

The Request for Recalculation is **GRANTED** to the extent indicated.

The patent term adjustment has been determined to be **916** days. The USPTO will *sua sponte* issue a certificate of correction reflecting the amount of PTA days determined by the recalculation.

Prior to the issuance of the certificate of correction, the USPTO will afford patentee an opportunity to be heard and request reconsideration. Accordingly, patentee has **one month or thirty (30) days**, whichever is longer, to file a request for reconsideration of this patent term adjustment calculation. See 35 U.S.C. 154(b)(3)(B)(ii) and 37 CFR 1.322(a)(4). No extensions of time will be granted under 37 CFR 1.136.

Patentee should use document code PET.OP if electronically filing a request for reconsideration of this patent term adjustment calculation. The patentee must also include the information required by 37 CFR 1.705(b)(2) and the fee required by 37 CFR 1.18(e). If patentee does not file a timely request for reconsideration of this patent term adjustment calculation including the information required by 37 CFR 1.705(b)(2) and the fee required by 37 CFR 1.18(e), the USPTO will issue a certificate of correction reflecting the PTA determination noted above.

Patentee should be aware that in order to preserve the right to review in the United States District Court for the District of Columbia of the USPTO patent term adjustment determination, patentee must ensure that he or she also take the steps required under 35 U.S.C. 154(b)(4)(A) in a timely manner. Nothing in the request for recalculation should be construed as providing an alternative time frame for commencing a civil action under 35 U.S.C. 154(b)(4)(A).

Any questions concerning this decision should be directed to the Office of Patent Legal Administration at 571-272-7702.

UNITED STATES PATENT AND TRADEMARK OFFICE

Commissioner for Patents
United States Patent and Trademark Office
P.O. Box 1450
Alexandria, VA 22313-1450
www.uspto.gov

BORGWARNER INC.
POWERTRAIN TECHNICAL CENTER
3800 AUTOMATION AVENUE, SUITE 100
AUBURN HILLS MI 48326-1782

COPY MAILED

JAN 3 2005

OFFICE OF PETITIONS

In re Patent No. 6,807,931 :
Issue Date: October 26, 2004 :
Application No. 10/408,400 :
Filed: May 7, 2003
Attorney Docket No. BW-DKT-02068A :

ON PETITION

This is a decision on the petition filed November 22, 2004, under 37 CFR 1.183, to waive the rules of 37 CFR 3.81(a) and accept the correction of the assignee on the front page of the above-identified patent. This decision is also rendered in response to the request for certificate of correction, pursuant to 37 CFR 1.323.

The petition under 37 CFR 1.183 is **GRANTED**.

The request for a certificate of correction under 37 CFR 1.323 is **GRANTED**.

Assignment data printed on the patent is based solely on the information so supplied on the Issue Fee Transmittal Form (PTOL-85B). A review of the record indicates that the Issue Fee Transmittal Form (PTOL-85B), submitted September 15, 2004 failed to identify the assignee.

In accordance with the request, and as the request agrees with Office assignment records, the assignee information will be corrected on the face of the patent as follows:

Assignee: BORGWARNER, INC.
AUBURN HILLS, MI (US)

The fees for the petition ($130.00) and for the certificate of correction ($100.00) have been applied.

This file is being forwarded to the Certificates of Correction Branch for issuance of the requested Certificate of Correction.

Telephone inquiries concerning this matter may be directed to the undersigned Petitions Attorney at (571) 272-3212.

Patricia Faison-Ball

Patricia Faison-Ball
Senior Petitions Attorney
Office of Petitions

UNITED STATES PATENT AND TRADEMARK OFFICE

Commissioner for Patents
United States Patent and Trademark Office
P.O. Box 1450
Alexandria, VA 22313-1450
www.uspto.gov

BORGWARNER INC.
POWERTRAIN TECHNICAL CENTER
3800 AUTOMATION AVENUE, SUITE 100
AUBURN HILLS MI 48326-1782

COPY MAILED

JAN 13 2005

OFFICE OF PETITIONS

In re Patent No. 6,807,931 :
Issue Date: October 26, 2004 :
Application No. 10/408,400 : ON PETITION
Filed: April 7, 2003
Attorney Docket No. BW-DKT-02068A :

CORRECTED DECISION[1]

This is a decision on the petition filed November 22, 2004, under 37 CFR 1.183, to waive the rules of 37 CFR 3.81(a) and accept the correction of the assignee on the front page of the above-identified patent. This decision is also rendered in response to the request for certificate of correction, pursuant to 37 CFR 1.323.

The petition under 37 CFR 1.183 is **GRANTED**.

The request for a certificate of correction under 37 CFR 1.323 is **GRANTED**.

Assignment data printed on the patent is based solely on the information so supplied on the Issue Fee Transmittal Form (PTOL-85B). A review of the record indicates that the Issue Fee Transmittal Form (PTOL-85B), submitted September 15, 2004 failed to identify the assignee.

In accordance with the request, and as the request agrees with Office assignment records, the assignee information will be corrected on the face of the patent as follows:

Assignee: BORGWARNER, INC.
AUBURN HILLS, MI (US)

The fees for the petition ($130.00) and for the certificate of correction ($100.00) have been applied.

This file is being forwarded to the Certificates of Correction Branch for issuance of the requested Certificate of Correction.

Telephone inquiries concerning this matter may be directed to the undersigned Petitions Attorney at (571) 272-3212.

Patricia Faison-Ball

Patricia Faison-Ball
Senior Petitions Attorney
Office of Petitions

[1]This decision replaces the decision mailed January 3, 2005 as the filing date on that letter was incorrect.

APPROVED 7/12/05

This facsimile message and its contents are legally privileged and confidential information intended solely for the use of the addressee. If the reader of this message is not the intended recipient, you are hereby notified that any dissemination, distribution, copying or other use of this message and its contents is strictly prohibited. If you have received this telecopy in error, please notify us immediately by telephone and return the original message to us at the address shown below via the Postal Service. Thank You.

ALSTON&BIRD LLP

RECEIVED
CENTRAL FAX CENTER
DEC 17 2004

Charlotte Office
Bank of America Plaza
101 South Tryon Street, Suite 4000
Charlotte, NC 282804000
704-444-1000
Fax 704-444-1111

Raleigh Office
3201 Beechleaf Court, Suite 600
Raleigh, NC 27604-1062
919-862-2200
Fax 919-862-2260

Atlanta Office
One Atlantic Center
1201 West Peachtree Street
Atlanta, GA 30309-3424
404- 881-7000
404-881-7777

TELECOPY

PLEASE DELIVER AS SOON AS POSSIBLE

DATE: December 17, 2004

TO: Attn: Examiner Dorner
Commissioner for Patents - United States Patent and Trademark Office

FROM: Ernest B. Lipscomb, III; Registration No. 24,733
This facsimile is being transmitted from the Charlotte office of Alston & Bird.

REQUEST FOR WITHDRAWAL AS ATTORNEY OR AGENT	Application No.	10/408,403
	Filing Date	April 7, 2003
	First Named Inventor	Kenneth B. Smith
	Group Art Unit	3634
	Examiner Name	Alvin C. Chin Shue
	Attorney Docket No.	047345/258896

Please see the attached Request for Withdrawal as Attorney or Agent.

NO. OF PAGES: (Including cover page) 3

OPERATOR:

IF NOT RECEIVED PROPERLY, PLEASE NOTIFY ME IMMEDIATELY AT

USER CODE:	MCPAN	FAX NUMBER:	(703) 872-9306
CLIENT/MATTER:	047345/258896		
REQUESTED BY:	Nancy McPartland x1069	VOICE NUMBER:	

REQUEST FOR WITHDRAWAL AS ATTORNEY OR AGENT		
	Application No.	10/408,403
	Filing Date	April 7, 2003
	First Named Inventor	Kenneth B. Smith
	Group Art Unit	3634
	Examiner Name	Alvin C. Chin Shue
	Attorney Docket No.	047345/258896

To: Commissioner for Patents
P.O. Box 1450
Alexandria, VA 22313-1450

Our firm (Customer Number 00826) hereby applies to withdraw as attorney or agent for the above-identified application. This withdrawal, executed by the undersigned, shall be effective for all attorneys of record for the present application associated with the firm number listed above including Brian C. Ellsworth (Registration No. 50,813).

The reasons for this request are:

Mr. Smith has refused to pay legal fees totaling $11,900.99. Mr. Smith has repeatedly ignored requests for payment sent by regular mail on April 4, 2004 and August 25, 2004; and by certified mail on December 8, 2004. Mr. Smith has also repeatedly ignored requests for instructions regarding this matter sent by certified mail on October 20, 2004 and November 17, 2004; and by certified mail and email on December 8, 2004.

As we have not received payment for preparation and filing of the present patent application and have been left without instructions regarding the Examiner's rejection dated July 21, 2004, we hereby request withdrawal as attorney for the above-referenced application under 37 C.F.R. 1.36.

☐ The correspondence address is NOT affected by this withdrawal.
☒ Change the correspondence address and direct all future correspondence to:

Mr. Kenneth B. Smith
318 W. Catawba Avenue
Mt. Holly, NC 28120

Respectfully submitted,

Ernest B. Lipscomb III

Ernest B. Lipscomb, III
Registration No. 24,733

CUSTOMER NO. 00826
ALSTON & BIRD LLP
Bank of America Plaza
101 South Tryon Street, Suite 4000
Charlotte, NC 28280-4000
Tel Charlotte Office (704) 444-1000
Fax Charlotte Office (704) 444-1111

UNITED STATES
PATENT AND
TRADEMARK OFFICE

UNDER SECRETARY OF COMMERCE FOR INTELLECTUAL PROPERTY AND
DIRECTOR OF THE UNITED STATES PATENT AND TRADEMARK OFFICE
P.O. Box 1450
Alexandrai, VA. 22313-1450
WWW.USPTO.GOV

Paper No.

Ms. Jane Remillard, Esq.
LAHIVE & COCKFIELD
28 State Street
Boston, MA 02109

Date: August 31, 2004
Application No. 10/408,412
Filing Date: April 7, 2003
Subject: Methods of using annexin for detecting cell death in vivo and treating associated conditions

ON PETITION
37 CFR 1.48(a)

Receipt is acknowledged of the petitions filed June 9, 2004, under 37 CFR 1.48(a) for correction of inventorship. The petition has been **GRANTED**.

In view of the papers filed, it has been found that this non-provisional application, as filed, through error and without deceptive intent, improperly set forth the Inventorship, and accordingly, this application has been changed by the **addition of Neil Steinmetz**. The application will be forwarded to the Office of Initial Patent Examination (OIPE) for issuance of a corrected filing receipt, and correction of the file jacket and PTO PALM data to reflect the inventorship as corrected.

8/31/04

Dameron Jones
United States Patent and Trademark Office
Primary Examiner
Art Unit 1616
Remsen 4A51
571-272-0617

UNITED STATES PATENT AND TRADEMARK OFFICE

UNITED STATES DEPARTMENT OF COMMERCE
United States Patent and Trademark Office
Address: COMMISSIONER FOR PATENTS
P.O. Box 1450
Alexandria, Virginia 22313-1450
www.uspto.gov

APPL NO.	FILING OR 371 (c) DATE	ART UNIT	FIL FEE REC'D	ATTY.DOCKET NO	DRAWINGS	TOT CLMS	IND CLMS
10/408,412	04/07/2003	1616	465	TEI-001DV	2	30	3

000959
LAHIVE & COCKFIELD, LLP.
28 STATE STREET
BOSTON, MA 02109

CONFIRMATION NO. 6139
CORRECTED FILING RECEIPT
OC000000013695878
OC000000013695878

Date Mailed: 09/01/2004

Receipt is acknowledged of this regular Patent Application. It will be considered in its order and you will be notified as to the results of the examination. Be sure to provide the U.S. APPLICATION NUMBER, FILING DATE, NAME OF APPLICANT, and TITLE OF INVENTION when inquiring about this application. Fees transmitted by check or draft are subject to collection. Please verify the accuracy of the data presented on this receipt. **If an error is noted on this Filing Receipt, please write to the Office of Initial Patent Examination's Filing Receipt Corrections, facsimile number 703-746-9195. Please provide a copy of this Filing Receipt with the changes noted thereon. If you received a "Notice to File Missing Parts" for this application, please submit any corrections to this Filing Receipt with your reply to the Notice. When the USPTO processes the reply to the Notice, the USPTO will generate another Filing Receipt incorporating the requested corrections (if appropriate).**

Applicant(s)

Allan M. Green, Cambridge, MA;
NEIL STEINMETZ, ATLANTIS, FL;

Assignment For Published Patent Application

Theseus Imaging Corporation, Boston, MA

Power of Attorney: The patent practitioners associated with Customer Number **000959**.

Domestic Priority data as claimed by applicant

This application is a DIV of 10/114,927 04/03/2002
which claims benefit of 60/281,277 04/03/2001

Foreign Applications

If Required, Foreign Filing License Granted: 07/23/2003

The number of your priority application, to be used for filing abroad under the Paris Convention is,
US10/408,412

Projected Publication Date: Not Applicable

Non-Publication Request: No

Early Publication Request: No

**** SMALL ENTITY ****

Title

Methods for using annexin for detecting cell death in vivo and treating associated conditions

Preliminary Class

424

LICENSE FOR FOREIGN FILING UNDER
Title 35, United States Code, Section 184
Title 37, Code of Federal Regulations, 5.11 & 5.15

GRANTED

The applicant has been granted a license under 35 U.S.C. 184, if the phrase "IF REQUIRED, FOREIGN FILING LICENSE GRANTED" followed by a date appears on this form. Such licenses are issued in all applications where the conditions for issuance of a license have been met, regardless of whether or not a license may be required as set forth in 37 CFR 5.15. The scope and limitations of this license are set forth in 37 CFR 5.15(a) unless an earlier license has been issued under 37 CFR 5.15(b). The license is subject to revocation upon written notification. The date indicated is the effective date of the license, unless an earlier license of similar scope has been granted under 37 CFR 5.13 or 5.14.

This license is to be retained by the licensee and may be used at any time on or after the effective date thereof unless it is revoked. This license is automatically transferred to any related applications(s) filed under 37 CFR 1.53(d). This license is not retroactive.

The grant of a license does not in any way lessen the responsibility of a licensee for the security of the subject matter as imposed by any Government contract or the provisions of existing laws relating to espionage and the national security or the export of technical data. Licensees should apprise themselves of current regulations especially with respect to certain countries, of other agencies, particularly the Office of Defense Trade Controls, Department of State (with respect to Arms, Munitions and Implements of War (22 CFR 121-128)); the Office of Export Administration, Department of Commerce (15 CFR 370.10 (j)); the Office of Foreign Assets Control, Department of Treasury (31 CFR Parts 500+) and the Department of Energy.

NOT GRANTED

No license under 35 U.S.C. 184 has been granted at this time, if the phrase "IF REQUIRED, FOREIGN FILING LICENSE GRANTED" DOES NOT appear on this form. Applicant may still petition for a license under 37 CFR 5.12, if a license is desired before the expiration of 6 months from the filing date of the application. If 6 months has lapsed from the filing date of this application and the licensee has not received any indication of a secrecy order under 35 U.S.C. 181, the licensee may foreign file the application pursuant to 37 CFR 5.15(b).

UNITED STATES PATENT AND TRADEMARK OFFICE

Commissioner for Patents
United States Patent and Trademark Office
P.O. Box 1450
Alexandria, VA 22313-1450
www.uspto.gov

KENYON & KENYON LLP
ONE BROADWAY
NEW YORK NY 10004

COPY MAILED

FEB 1 1 2008

OFFICE OF PETITIONS

In re Application of :
Perin, et al. :
Application No. 10/408,420 :
Filed: April 7, 2003 :
Attorney Docket No. 12406/113 :
For: ITEM VENDING MACHINE AND METHOD

ON PETITION

This is a decision on the petition under 37 CFR 1.181, filed January 2, 2008 (certificate of mailing date December 31, 2007), requesting that the Office withdraw the holding of abandonment of the above-identified application.

The petition under 37 CFR 1.181 is **GRANTED**.

This application became abandoned as a result of applicants' alleged failure to timely file a proper follow-up submission within two (2) months of the Notice of Appeal filed May 30, 2007. A Notice of Abandonment was mailed on November 29, 2007.

Petitioners request withdrawal of the holding of abandonment based on the assertion that a petition for a five month extension of time and a RCE and amendment were timely filed on January 2, 2008 (certificate of mailing date December 31, 2007). It is noted that December 30, 2007 was a Sunday. The documents are present in the application file and Office financial records show that the required $2230.00 five month extension of time fee and the $810.00 required RCE fee were charged on accounting date January 3, 2008. The undersigned will change the mailroom date of the payments from January 2, 2008 to December 31, 2007 so they register as timely submitted in Office financial databases.

Per 37 CFR 41.37 and MEP 1205.01, the two month period to file an Appeal Brief, or other appropriate submission, after the filing of a Notice of Appeal, is extendable up to 5 months. Therefore, the five month extension of time and the RCE and amendment were timely filed on January 2, 2008 (certificate of mailing date December 31, 2007).

The petition under 37 CFR 1.181 is **granted**, the holding of abandonment is withdrawn, and the November 29, 2007 Notice of Abandonment is **vacated**. No petition fee has been or will be charged in connection with this matter.

The application file will be forwarded to Technology Center A.U. 3651 for consideration of the RCE and amendment, filed on January 2, 2008 (certificate of mailing date December 31, 2007).

Telephone inquiries pertaining to this matter may be directed to the undersigned at (571) 272-3230.

Shirene Willis Brantley
Senior Petitions Attorney
Office of Petitions
Office of the Deputy Commissioner
for Patent Examination Policy

UNITED STATES PATENT AND TRADEMARK OFFICE

Commissioner for Patents
United States Patent and Trademark Office
P.O. Box 1450
Alexandria, VA 22313-1450
www.uspto.gov

DOW CORNING CORPORATION CO1232
2200 W. SALZBURG ROAD
P.O. BOX 994
MIDLAND MI 48686-0994

COPY MAILED

MAY 1 9 2004

OFFICE OF PETITIONS

In re Application of :
Burt Michael Wrolson, et al. :
Application No. 10/408,469 :
Filed: April 7, 2003 :
Attorney Docket No. DC4894DIV1 :

ON PETITION

This is a decision on the petition under 37 CFR 1.313(c)(3), filed by facsimile transmission on May 14, 2004, to withdraw the above-identified application from issue after payment of the issue fee.

Petitioner requests that the application be withdrawn from issue for express abandonment. See 37 CFR 1.313(c)(3).

The petition is **GRANTED**.

The application is hereby withdrawn from issue, and the abandonment is hereby recognized.

Telephone inquiries should be directed to the undersigned at (703) 305-9220.

The application is being referred to the Office of Publications to be processed as an abandoned file.

Sherry D. Brinkley
Petitions Examiner
Office of Petitions
Office of the Deputy Commissioner
for Patent Examination Policy

UNITED STATES PATENT AND TRADEMARK OFFICE

Commissioner for Patents
United States Patent and Trademark Office
P.O. Box 1450
Alexandria, VA 22313-1450
www.uspto.gov

Date : May 18, 2004

TO : Director, Office of Patent Publication

FROM : Office of the Deputy Commissioner for Patent Examination Policy

SUBJECT : Withdrawal from Issue of

Applicant(s) : Burt Michael Wrolson, et al.
Application No. : 10/408,469
Filed : April 2, 2003

The above-identified application has been assigned Patent No. 6,743,857 and an issue date of June 1, 2004.

It is hereby directed that this application be withdrawn from issue at the request of the applicant.

Do not refund the issue fee.

The following erratum should be published in the Official Gazette if the above-identified application is published in the OG of June 1, 2004:

> "All reference to Patent No. 6,743,857 to BURT MICHAEL WROLSON, ET AL. of MICHIGAN for METHOD OF MAKING SILICONE EMULSIONS HAVING LOW RESIDUAL VOLATILE SILOXANE OLIGOMER CONTENT appearing in the Official Gazette of June 1, 2004, should be deleted since no patent was granted."

Sherry D. Brinkley
Petitions Examiner
Office of Petitions
Office of the Deputy Commissioner
for Patent Examination Policy

cc: Geraldine Dozier, Crystal Park 3-44l (FAX-306-2737)
Deneise Boyd, Crystal Park 2, Suite ll00 (FAX-308-5413)
Mary Louise McAskill, Crystal Park 3-910 (FAX 305-4372)
Niomi Farmer, Crystal Park 3-9l0 (FAX-305-4372)
Mary E. Johnson (Cookie), P/OCS, CM1-6D07
Duane K.Davis, P/OCS, CM1-6A07
Tamara K. Greene, PK3-910

UNITED STATES PATENT AND TRADEMARK OFFICE

UNITED STATES DEPARTMENT OF COMMERCE
United States Patent and Trademark Office
Address: COMMISSIONER FOR PATENTS
P.O. Box 1450
Alexandria, Virginia 22313-1450
www.uspto.gov

SCULLY SCOTT MURPHY & PRESSER, PC
400 GARDEN CITY PLAZA
SUITE 300
GARDEN CITY, NY 11530

Mail Date: 04/21/2010

Applicant	: Randall L. Barbour	: DECISION ON REQUEST FOR
Patent Number	: 7616984	: RECALCULATION of PATENT
Issue Date	: 11/10/2009	: TERM ADJUSTMENT IN VIEW
Appliction No	: 10/408,511	: OF WYETH AND NOTICE OF INTENT TO
Filed	: 04/07/2003	: ISSUE CERTIFICATE OF CORRECTION
		:

The Request for Recalculation is **GRANTED** to the extent indicated.

The patent term adjustment has been determined to be **1825** days. The USPTO will *sua sponte* issue a certificate of correction reflecting the amount of PTA days determined by the recalculation.

Prior to the issuance of the certificate of correction, the USPTO will afford patentee an opportunity to be heard and request reconsideration. Accordingly, patentee has **one month or thirty (30) days**, whichever is longer, to file a request for reconsideration of this patent term adjustment calculation. See 35 U.S.C. 154(b)(3)(B)(ii) and 37 CFR 1.322(a)(4). No extensions of time will be granted under 37 CFR 1.136.

Patentee should use document code PET.OP if electronically filing a request for reconsideration of this patent term adjustment calculation. The patentee must also include the information required by 37 CFR 1.705(b)(2) and the fee required by 37 CFR 1.18(e). If patentee does not file a timely request for reconsideration of this patent term adjustment calculation including the information required by 37 CFR 1.705(b)(2) and the fee required by 37 CFR 1.18(e), the USPTO will issue a certificate of correction reflecting the PTA determination noted above.

Patentee should be aware that in order to preserve the right to review in the United States District Court for the District of Columbia of the USPTO patent term adjustment determination, patentee must ensure that he or she also take the steps required under 35 U.S.C. 154(b)(4)(A) in a timely manner. Nothing in the request for recalculation should be construed as providing an alternative time frame for commencing a civil action under 35 U.S.C. 154(b)(4)(A).

Any questions concerning this decision should be directed to the Office of Patent Legal Administration at 571-272-7702.

UNITED STATES PATENT AND TRADEMARK OFFICE

COMMISSIONER FOR PATENTS
UNITED STATES PATENT AND TRADEMARK OFFICE
P.O. BOX 1450
ALEXANDRIA, VA 22313-1450
www.uspto.gov
AMB

Paper No. 4

MYERS BIGEL SIBLEY & SAJOVEC
PO BOX 37428
RALEIGH, NC 27627

COPY MAILED

SEP 15 2003

OFFICE OF PETITIONS

In re Application of
Joo
Application No. 10/408,512
Filed: April 7, 2003
Attorney Docket Number: 5649-1087

ON PETITION

This decision is in response to the petition under 37 CFR 1.10(c), filed June 26, 2003, requesting that the above-identified application be accorded a filing date of April 7, 2003 instead of the presently accorded filing date of April 8, 2003.

Petitioner alleges that the application was deposited in Express Mail service April 7, 2003. In support, petitioner provided a copy of an Express Mail label bearing tracking number EV193631340US (the same Express Mail number found on the application transmittal letter accompanying the original application papers located in the official file) and a "date-in" of April 7, 2003. In addition, a search of the USPS Track/Confirm Database indicates that a package bearing Express Mail Label No. EV193631340US was accepted by the USPS on April 7, 2003 and delivered to the United States Patent and Trademark Office on April 8, 2003.

In view of the above, the petition is **GRANTED**.

No fee has been charged to petitioner's deposit account in connection with this matter.

This application is being forwarded to the Official of Initial Patent Examination for correction of the filing date to April 7, 2003.

Telephone inquiries related to this decision may be directed to the undersigned at (703) 305-0310.

Alesia M. Brown
Senior Petitions Attorney
Office of Petitions

UNITED STATES PATENT AND TRADEMARK OFFICE

Commissioner for Patents
United States Patent and Trademark Office
P.O. Box 1450
Alexandria, VA 22313-1450
www.uspto.gov

FISH & RICHARDSON PC
P.O. BOX 1022
MINNEAPOLIS, MN 55440-1022

COPY MAILED

AUG 08 2006

OFFICE OF PETITIONS

In re Application of	:	
Lee, et al.	:	
Application No. 10/408,519	:	DECISION DISMISSING PETITION
Filed: April 7, 2003	:	UNDER 37 CFR 1.55(c)
Attorney Docket No. 12674-002002	:	

This is a decision on the petition under 37 CFR 1.55(c), filed September 27, 2004, for acceptance of an unintentionally delayed claim under 35 U.S.C. § 119(a)-(d) for benefit of the filing date of foreign Taiwanese Application No. 88119858, filed November 15, 1999.

The instant pending nonprovisional application was filed after November 29, 2000, and did not include a reference to the foreign application, for which benefit is now sought, within the later of four months from the actual filing date of the application or sixteen months from the filing date of the prior foreign application. Therefore, since the claim for priority is submitted after the period specified in 37 CFR 1.55(a)(1)(i), this is an appropriate petition under the provisions of 37 CFR 1.55(c).

A petition under 37 CFR 1.55(c) to accept an unintentionally delayed claim for priority requires:

(1) The nonprovisional application claiming the benefit of an earlier filing date must be filed on or after November 29, 2000;

(2) the claim submitted with the petition must identify the prior foreign application for which priority is claimed, as well as any foreign application for the same subject matter and having a filing date before that of the application for which priority is claimed, by the application number, country, and the filing date and be included either in an oath or declaration (37 CFR 1.63(c)(2)) or in an Application Data Sheet (37 CFR 1.76(b)(6);

(3) the surcharge as set forth in 37 CFR 1.17(t);

(4) a statement that the entire delay between the date the claim was due under 37 CFR 1.55(a)(1) and the date the claim was filed was unintentional. (The Director may require additional information where there is a question whether the delay was unintentional.); and

(5) the above-identified nonprovisional application must be filed within 12 months of the filing date of the foreign application.

The instant petition fails to comply with item (2) above. In this regard, a review of the file record fails to disclose that the priority information was included in an oath or declaration or in an Application Data Sheet in accordance with 37 CFR 1.76(b)(6). Unless provided in an application data sheet, 37 CFR 1.63(c)(2) requires that the oath or declaration must identify the foreign application for patent or inventor's certificate for which priority is claimed under 37 CFR 1.55, and any foreign applications having a filing date before that of the application on which priority is claimed, by specifying the application number, country, day, month, and year of its filing. *Note* MPEP 201.14.

In view of the above, compliance with 37 CFR 1.63(c)(2) or 37 CFR 1.76(b)(6) must be satisfied if applicant desires to claim priority to the foreign application noted in the petition. Any future petition should include a cover letter and be entitled "Renewed Petition under 37 CFR 1.55(c)."

Further correspondence with respect to this matter should be addressed as follows:

By mail: Mail Stop Petition
Commissioner for Patents
Box 1450
Alexandria, VA 22313

By FAX: (571) 273-8300
Attn: Office of Petitions

By hand: Customer Service Window
Randolph Building
401 Dulany Street
Alexandria, VA 22314

Any inquiries concerning this decision may be directed to Petitions Attorney Edward Tannouse at (571) 272-3228.

Frances Hicks

Frances Hicks
Petitions Examiner
Office of Petitions
Office of the Deputy Commissioner
for Patent Examination Policy

UNITED STATES PATENT AND TRADEMARK OFFICE

Commissioner for Patents
United States Patent and Trademark Office
P.O. Box 1450
Alexandria, VA 22313-1450
www.uspto.gov

FISH & RICHARDSON PC
P.O. BOX 1022
MINNEAPOLIS, MN 55440-1022

COPY MAILED

JAN 17 2007

OFFICE OF PETITIONS

In re Application of	: DECISION DISMISSING PETITION
Lee et al.	: UNDER 37 CFR 1.55(c)
Application No. 10/408,519	:
Filing or 371(c) Date: 04/07/2003	:
Pat. Number: 7,109,024	:
Issue Date: 09/19/2006	:
Attorney Docket No 12674-002002	:

This is a decision on the "Renewed Petition Under 37 C.F.R 1.55(c)", filed September 8, 2006, to accept an unintentionally delayed claim under 35 U.S.C. § 119(a)-(d) for the benefit of priority to prior-filed Taiwanese Application No. 88119858, filed November 15, 1999. The petition is properly treated under 37 C.F.R 1.55(c).

The petition is **dismissed**.

Applicant filed a petition to claim priority to foreign Taiwanese application 88119858, on September 27, 2004, which was dismissed in a Decision mailed August 8, 2006, for failing to provide the reference in an oath/declaration or ADS. Applicant filed the present renewed petition on September 8, 2006, however, before the petition could be addressed, the application issued as U.S. Patent No. 7,109,024 on September 19, 2006.

Applicant failed to submit a claim for the benefit of priority to the above-noted, prior-filed Taiwanese application within the time period set forth in 37 CFR 1.55(a)(1)(i), and further failed to include a proper reference to the prior-filed foreign application as required by 37 CFR 1.55(a)(1)(i), before the patent issued.

The applicable rule, 37 CFR 1.55(a)(2), requires that "[t]he claim for priority and the certified copy of the foreign application specified in 35 U.S.C. 119(b) or PCT Rule 17 must, in any event, be filed before the patent is granted" [emphasis added].

A review of the application file reveals that no certified copy of the foreign application was filed in this application before the patent was granted.

The MPEP 201.16 provides:

> In summary, a certificate of correction under 35 U.S.C. 255 and 37 CFR 1.323 may be requested and issued in order to perfect a claim for foreign priority benefit in a patented continuing application if the requirements of 35 U.S.C. 119(a)-(d) or (f) had been satisfied in the parent application prior to issuance of the patent and the requirements of 37 CFR 1.55(a) are met. Furthermore, if the continuing application (other than a design application), which issued as a patent, was filed on or after November 29, 2000, in addition to the filing of a certificate of correction request, patentee must also file a petition for an unintentionally delayed foreign priority claim under 37 CFR 1.55(c). However, a claim to foreign priority benefits cannot be perfected via a certificate of correction if the requirements of 35 U.S.C. 119(a)-(d) or (f) had not been satisfied in the patented application, or its parent, prior to issuance and the requirements of 37 CFR 1.55(a) are not met. In this latter circumstance, the claim to foreign priority benefits can be perfected only by way of a reissue application in accordance with the rationale set forth in Brenner v. State of Israel, 158 USPQ 584.

In this instance, the above-identified application is a continuation-in-part of prior application 09/522,417. A review of parent application 09/522,417 reveals that it claims priority to Taiwanese Application No. 88119858, filed November 15, 1999. As such, the claim to foreign priority benefits may be perfected via a certificate of correction. Applicant should file a renewed petition along with a certificate of correction (and $100.00 fee), containing the reference of the prior filed Taiwanese application.

Further correspondence with respect to this matter should be addressed as follows:

By mail: Mail Stop PETITIONS
Commissioner for Patents
Post Office Box 1450
Alexandria, VA 22313-1450

By hand: Customer Service Window
Mail Stop Petitions
Randolph Building
401 Dulany Street
Alexandria, VA 22314

By fax: (571) 273-8300
ATTN: Office of Petitions

Any questions concerning this matter may be directed to Derek Woods at (571) 272-3232.

Christina Tartera Donnell

Christina Donnell
Senior Petitions Attorney
Office of Petitions

UNITED STATES PATENT AND TRADEMARK OFFICE

Commissioner for Patents
United States Patent and Trademark Office
P.O. Box 1450
Alexandria, VA 22313-1450
www.uspto.gov

FISH & RICHARDSON PC
P.O. BOX 1022
MINNEAPOLIS, MN 55440-1022

COPY MAILED

AUG 0 3 2007

OFFICE OF PETITIONS

In re Application of	: DECISION GRANTING PETITION
Lee et al.	: UNDER 37 CFR 1.55(c) AND
Application No. 10/408,519	: REQUEST FOR CERTIFICATE OF
Filing or 371(c) Date: 04/07/2003	: CORRECTION
Pat. Number: 7,109,024	:
Issue Date: 09/19/2006	:
Attorney Docket No 12674-002002	:
	:

This is a decision on the "Renewed Petition Under 37 C.F.R 1.55(c)", filed February 20, 2007, seeking to add a claim for priority under 35 U.S.C. § 119(a)-(d) for the benefit of priority to prior-filed Taiwanese Application No. 88119858, filed November 15, 1999, by way of a certificate of correction.

The petition is **granted**.

A review of the file record fails to disclose that a claim for the benefit of priority to the above-noted, prior-filed Taiwanese Application No. 88119858, filed November 15, 1999, was made within the time period set forth in 37 C.F.R 1.55(c) and further failed to include a proper reference to the prior-filed application as required by 37 C.F.R 1.55(c).

The applicable rule, 37 CFR 1.55(a)(2), requires that "[t]he claim for priority and the certified copy of the foreign application specified in 35 U.S.C. 119(b) or PCT Rule 17 must, in any event, be filed before the patent is granted" [emphasis added].

A review of the application file reveals that no certified copy of the foreign application was filed in this application before the patent was granted.

The MPEP 201.16 provides:

> In summary, a certificate of correction under 35 U.S.C. 255 and 37 CFR 1.323 may be requested and issued in order to perfect a claim for foreign priority benefit in a patented continuing application if the requirements of 35 U.S.C. 119(a)-(d) or (f) had been satisfied in the parent application prior to issuance of the patent and the requirements of 37 CFR 1.55(a) are met. Furthermore, if the continuing application (other than a design application), which issued as a patent, was filed

on or after November 29, 2000, in addition to the filing of a certificate of correction request, patentee must also file a petition for an unintentionally delayed foreign priority claim under 37 CFR 1.55(c). However, a claim to foreign priority benefits cannot be perfected via a certificate of correction if the requirements of 35 U.S.C. 119(a)-(d) or (f) had not been satisfied in the patented application, or its parent, prior to issuance and the requirements of 37 CFR 1.55(a) are not met. In this latter circumstance, the claim to foreign priority benefits can be perfected only by way of a reissue application in accordance with the rationale set forth in Brenner v. State of Israel, 158 USPQ 584.

The instant application was filed April 7, 2003. Therefore, since this application was filed after November 29, 2000, a petition under 37 CFR 1.55(c), along with submission of a Certificate of Correction, is the appropriate avenue of relief to accept a late claim for the benefit of priority to a prior-filed nonprovisional application after issuance of the application into a patent. *See* MPEP 201.16.

A petition under 37 CFR 1.55(c) to accept an unintentionally delayed claim for priority requires:

(1) The nonprovisional application claiming the benefit of an earlier filing date must be filed on or after November 29, 2000;

(2) the claim submitted with the petition must identify the prior foreign application for which priority is claimed, as well as any foreign application for the same subject matter and having a filing date before that of the application for which priority is claimed, by the application number, country, and the filing date and be included either in an oath or declaration (37 CFR 1.63(c)(2)) or in an Application Data Sheet (37 CFR 1.76(b)(6);

(3) the surcharge as set forth in 37 CFR 1.17(t);

(4) a statement that the entire delay between the date the claim was due under 37 CFR 1.55(a)(1) and the date the claim was filed was unintentional (the Director may require additional information where there is a question whether the delay was unintentional); and

(5) the above-identified nonprovisional application must be filed within 12 months of the filing date of the foreign application.

This application was filed on April 7, 2003, which is after November 29, 2000 and during the pendency of parent application 09/522,417, filed March 9, 2000, which was filed within 12 months of November 15, 1999 (the filing date of the foreign application to which benefit is now being claimed). Accordingly, the requirements of 35 U.S.C. 119(a)-(d) or (f) were satisfied in the parent application prior to issuance of the patent and the requirements of 37 CFR 1.55(a) are met. On September 8, 2006, an Application Data Sheet ("ADS") was received which identifies the foreign application for which priority is claimed by application number, country and filing

date. The required petition fee was received with the original petition on September 27, 2004. The required certificate of correction fee was received with the present renewed petition. Regarding the statement of unintentional delay, Applicant included a statement of unintentional delay in the original petition filed September 27, 2004; however, the renewed petition(s) have excluded the statement of unintentional delay. 37 CFR § 1.55(c) requires a statement that the entire delay between the date the claim was due under 37 CFR § 1.55(a)(1) and the date the claim was filed was unintentional. Since the statement does not appear in the renewed petition(s), but does appear in the original petition, the statement in the original petition is being construed as applying to the renewed petition(s) as required by 37 CFR §1.55(c). If this is not a correct application of the statement of unintentional delay, petitioner should promptly notify the Office.

All of the above requirements having been satisfied, the late claim for priority under 35 U.S.C. § 119(a)-(d) is accepted as being unintentionally delayed.

Petitioner is advised that the granting of this petition and the mailing of a corrected Filing Receipt should not be viewed as an indication that a determination has been made that this application is entitled to claim benefit of the prior-filed application. A determination that applicant is entitled to claim benefit of the prior-filed application will be made by the Examiner prior to the mailing of a certificate of correction.

Any questions concerning this matter may be directed to Derek Woods at (571) 272-3232.

This application is being referred to the Certificates of Correction Branch for processing the request for a certificate of correction in accordance with this decision on the petition under 37 CFR 1.55(c).

Christina T. Donnell

Christina T. Donnell
Senior Petitions Attorney
Office of Petitions

SPE RESPONSE FOR CERTIFICATE OF CORRECTION

Paper No.:20060417

DATE : April 17, 2006

TO SPE OF : ART UNIT 2824

SUBJECT : Request for Certificate of Correction on Patent No.: 6,816,426 B2

A response is requested with respect to the accompanying request for a certificate of correction.

Please complete this form and return with file, within **7** days to:
Certificates of Correction Branch - PK 3-910
Palm location **7590** - Tel. No. 305-8201

With respect to the change(s) requested, correcting Office and/or Applicant's errors, should the patent read as shown in the certificate of correction? No new matter should be introduced, nor should the scope or meaning of the claims be changed.

Thank You For Your Assistance **Certificates of Correction Branch**

The request for issuing the above-identified correction(s) is hereby:
Note your decision on the appropriate box.

☐ **Approved** **All** changes apply.

☒ **Approved in Part** Specify below which changes **do not** apply.

☐ **Denied** State the reasons for denial below.

Comments:

1. The corrections to the drawings, on pages 1 and 3-5, are denied, since they would change the scope of the original disclosure, namely, the widths of the specified lines.
2. The correction in column 3, line 4 is denied, since the original possessive form "DRAM's" appears to be correct (instead of the plural form --DRAMs--).
3. The correction in column 4, line 34 is denied, since the original form "et al." without a comma appears to be correct.
4. The correction in column 6, line 4 is denied; rather, said phrase should be corrected as -- may, but do not have to,-- since it refers to more than one device.
5. The correction in claims 15, column 11, line 25 is denied, since the original word "for" appears to be correct.

4/19/06

RICHARD ELMS
SUPERVISORY PATENT EXAMINER
TECHNOLOGY CENTER 2800

Art Unit 2824

UNITED STATES PATENT AND TRADEMARK OFFICE

Commissioner for Patents
United States Patent and Trademark Office
P.O. Box 1450
Alexandria, VA 22313-1450
www.uspto.gov

EVAN J. FEDERMAN
LEGAL DIVISION
WARNER-LAMBERT COMPANY LLC
201 TABOR ROAD
MORRIS PLAINS, NJ 07950

COPY MAILED

JAN 19 2007

OFFICE OF PETITIONS

In re Application of	:	
Ohnuki et al.	:	
Application No. 10/408,536	:	ON PETITION
Filed: April 7, 2003	:	
Attorney Docket No. PC25158A	:	

This is a decision on the petition under 37 C.F.R. § 1.137(b), filed November 1, 2006, to revive the above-identified application.

The petition is **GRANTED.**

The petition satisfies the conditions for revival pursuant to the provisions of 37 CFR 1.137(b) in that (1) the reply in the form of a Request for Continued Examination and an Amendment; (2) the petition fee; and (3) the required statement of unintentional delay have been received. Accordingly, the response has been accepted as having been unintentionally delayed.

This matter is being referred to Technology Center 1600 for processing of the Request for Continued Examination under 37 CFR 1.114 filed with the instant petition.

Telephone inquiries regarding this decision should be directed to the undersigned at (571) 272-3206.

Liana Walsh
Petitions Examiner
Office of Petitions

SPE RESPONSE FOR CERTIFICATE OF CORRECTION

Paper No.:20060406

DATE : April 6, 2006

TO SPE OF : ART UNIT 2824

SUBJECT : Request for Certificate of Correction on Patent No.: 6,856,567 B2

A response is requested with respect to the accompanying request for a certificate of correction.

Please complete this form and return with file, within **7** days to:
Certificates of Correction Branch - PK 3-910
Palm location **7590** - Tel. No. 305-8201

With respect to the change(s) requested, correcting Office and/or Applicant's errors, should the patent read as shown in the certificate of correction? No new matter should be introduced, nor should the scope or meaning of the claims be changed.

Thank You For Your Assistance **Certificates of Correction Branch**

The request for issuing the above-identified correction(s) is hereby:
Note your decision on the appropriate box.

☐ **Approved** **All** changes apply.

☒ **Approved in Part** Specify below which changes **do not** apply.

☐ **Denied** State the reasons for denial below.

Comments:

1. The corrections to the drawings, on pages 1 and 3-5, are denied, since they would change the scope of the original disclosure, namely, the widths of the specified lines.
2. The correction in column 3, line 4 is denied, since the original possessive form "DRAM's" appears to be correct (instead of the plural form --DRAMs--).
3. The correction in column 4, line 34 is denied, since the original form "et al." without a comma appears to be correct.
4. The correction in column 6, line 4 is denied; rather, said phrase should be corrected as --may, but do not have to,-- since it refers to more than one device.

Art Unit 2824 RICHARD ELMS 4/6/06
SUPERVISORY PATENT EXAMINER
TECHNOLOGY CENTER 2800

UNITED STATES PATENT AND TRADEMARK OFFICE

Commissioner for Patents
United States Patent and Trademark Office
P.O. Box 1450
Alexandria, VA 22313-1450
www.uspto.gov

COPY MAILED

JAN 0 4 2007

OFFICE OF PETITIONS

TRASK BRITT
P.O. BOX 2550
SALT LAKE CITY UT 84110

In re Application of	:	
Kevin G. Donohoe	:	
Application No. 10/408,542	:	ON PETITION
Filed: April 7, 2003	:	
Attorney Docket No. 3778.1US (98-0182.01/US)	:	

This is a decision on the petition, filed January 3, 2007, under 37 CFR 1.313(c)(2) to withdraw the above-identified application from issue after payment of the issue fee.

The petition is **GRANTED**.

The above-identified application is withdrawn from issue for consideration of a submission under 37 CFR 1.114 (request for continued examination). See 37 CFR 1.313(c)(2).

Petitioner is advised that the issue fee paid on September 1, 2006 in the above-identified application cannot be refunded. If, however, the above-identified application is again allowed, petitioner may request that it be applied towards the issue fee required by the new Notice of Allowance.[1]

Telephone inquiries should be directed to the undersigned at (571) 272-3208.

The examiner of Technology Center AU 1765 will consider the request for continued examination under 37 CFR 1.114.

Karen Creasy
Petitions Examiner
Office of Petitions

---

[1] The request to apply the issue fee to the new Notice may be satisfied by completing and returning the new Issue Fee Transmittal Form PTOL-85(b), which includes the following language thereon: "Commissioner for Patents is requested to apply the Issue Fee and Publication Fee (if any) or re-apply any previously paid issue fee to the application identified above." Petitioner is advised that, whether a fee is indicated as being due or not, the Issue Fee Transmittal Form **must** be completed and timely submitted to avoid abandonment. Note the language in bold text on the first page of the Notice of Allowance and Fee(s) Due (PTOL-85).

UNITED STATES PATENT AND TRADEMARK OFFICE

Commissioner for Patents
United States Patent and Trademark Office
P.O. Box 1450
Alexandria, VA 22313-1450
www.uspto.go

RUTAN & TUCKER, L.LP.
611 ANTON BLVD.
SUITE 1400
COSTA MESA CA 92626

MAILED

APR 28 2009

OFFICE OF PETITIONS

In re Patent No. 6,817,534 :
Issue Date: November 16, 2004 :
Application No. 10/408,545 : ON PETITION
Filed: April 7, 2003 :
Attorney Docket No. 025704-0016P :

This is a decision on the petition filed March 17, 2009, which is being treated as a petition under 37 CFR 1.378(c), to accept the unintentionally delayed payment of a maintenance fee for the above-identified patent.

The petition is **GRANTED**.

This patent expired on November 17, 2008 for failure to pay the first maintenance fee. Since this petition was submitted within twenty-four months after the six-month grace period provided in 37 CFR 1.362(e), the petition was timely filed under the provisions of 37 CFR 1.378(c).

The maintenance fee is hereby accepted and the above-identified patent is reinstated as of the mail date of this decision.

Telephone inquiries concerning this decision should be directed to the undersigned at (571) 272-3208.

The patent file is being referred to Files Repository.

Karen Creasy

Karen Creasy
Petitions Examiner
Office of Petitions

IFW

RECEIVED
CENTRAL FAX CENTER
MAR 17 2009

2009 MAR 19 PM 4:25

PTO/SB/88 (03-09)
Approved for use through 03/31/2012. OMB 0651-0016
U.S. Patent and Trademark Office; U.S. DEPARTMENT OF COMMERCE
Under the Paperwork Reduction Act of 1995, no persons are required to respond to a collection of information unless it displays a valid OMB control number

PETITION TO ACCEPT UNINTENTIONALLY DELAYED PAYMENT OF MAINTENANCE FEE IN AN EXPIRED PATENT (37 CFR 1.378 (c))

Docket Number (Optional)
025704-0016P

RECEIVED
MAR 27 2009
OFFICE OF PETITIONS

Mail to: Mail Stop Petition
Commissioner for Patents
P.O. Box 1450
Alexandria, VA 22313-1450
Fax: (571) 273-8300

NOTE: If information or assistance is needed in completing this form, please contact Petitions Information at (571) 272-3282.

Patent No. 6817534 Application Number 10408545

Issue Date 2004-11-16 Filing Date 2003-04-07

CAUTION: Maintenance fee (and surcharge, if any) payment must correctly identify: (1) the patent number (or reissue patent number, if a reissue) and (2) the application number of the actual U.S. application (or reissue application) leading to issuance of that patent to ensure the fee(s) is/are associated with the correct patent. 37 CFR 1.366(c) and (d).

Also complete the following information, if applicable

The above – identified patent

☐ is a reissue of original Patent No. _____ original issue date _____

original application number _____

original filing date _____

04/29/2009 CKHLOK 00000003 502191 6817534
01 FC:2551 490.00 DA
02 FC:1558 1640.00 DA

☐ resulted from the entry into the U.S. under 35 U.S.C. 371 of international application _____

filed on _____

CERTIFICATE OF MAILING (37 CFR 1.89(a))

I hereby certify that this paper (along with any paper referred to as being attached or enclosed) is being deposited with the United States Postal Service on the date shown below with sufficient postage as first class mail in an envelope addressed to Mail Stop Petition, Commissioner for Patents, P.O. Box 1450, Alexandria, VA 22313-1450, or facsimile transmitted to the U.S. Patent and Trademark Office on the date shown below.

2009-03-17
Date

Signature

Francine R Sanders
Typed or Printed Name of Person Signing Certificate

03/20/2009 DALLEN 00000011 502191 6817534
01 FC:1599 2130.00 DA

Adjustment date: 04/29/2009 CKHLOK
03/20/2009 DALLEN 00000011 502191 6817534
01 FC:1599 2130.00 CR

This collection of information is required by 37 CFR 1.378(c). The information is required to obtain or retain a benefit by the public which is to file (and by the USPTO to process) an application. Confidentiality is governed by 35 U.S.C. 122 and 37 CFR 1.11 and 1.14. This collection is estimated to take 1 hour to complete, including gathering, preparing, and submitting the completed application form to the USPTO. Time will vary depending upon the individual case. Any comments on the amount of time you require to complete this form and/or suggestions for reducing this burden, should be sent to the Chief Information Officer, U.S. Patent and Trademark Office, U.S. Department of Commerce, P.O. Box 1450, Alexandria, Virginia 22313-1450. DO NOT SEND FEES OR COMPLETED FORMS TO THIS ADDRESS. SEND TO: Mail Stop Petition, Commissioner for Patents, P.O. Box 1450, Alexandria, Virginia 22313-1450

If you need assistance in completing the form, call 1-800-PTO-9199 and select option 2.

RECEIVED
CENTRAL FAX CENTER
MAR 17 2009

PTO/SB/66 (03-09)
Approved for use through 03/31/2012. OMB 0651-0016
U.S. Patent and Trademark Office; U.S. DEPARTMENT OF COMMERCE
Under the Paperwork Reduction Act of 1995, no persons are required to respond to a collection of information unless it displays a valid OMB control number

RECEIVED
MAR 27 2009
OFFICE OF PETITIONS

1. SMALL ENTITY

☑ Patentee claims, or has previously claimed, small entity status. See 37 CFR 1.27.

2. LOSS OF ENTITLEMENT TO SMALL ENTITY STATUS

☐ Patentee is no longer entitled to small entity status. See 37 CFR 1.27(g)

3. MAINTENANCE FEE (37 CFR 1.20(e)-(g))

The appropriate maintenance fee must be submitted with this petition, unless it was paid earlier.

NOT Small Entity			Small Entity		
Amount	Fee	(Code)	Amount	Fee	(Code)
☐ $ _____	3 ½ yr fee	(1551)	☑ $ 490	3 ½ yr fee	(2551)
☐ $ _____	7 ½ yr fee	(1552)	☐ $ _____	7 ½ yr fee	(2552)
☐ $ _____	11 ½ yr fee	(1553)	☐ $ _____	11 ½ yr fee	(2553)

MAINTENANCE FEE BEING SUBMITTED $ 490

4. SURCHARGE

The surcharge required by 37 CFR 1.20(i)(2) of $ 1640.00 (Fee Code 1558) must be paid as a condition of accepting unintentionally delayed payment of a maintenance fee.

SURCHARGE FEE BEING SUBMITTED $ 1640

5. MANNER OF PAYMENT

☐ Enclosed is a check for the sum of $ _____

☑ Please charge Deposit Account No. 502191 the sum of $ 2130.00

☐ Payment by credit card. Form PTO-2038 is attached.

6. AUTHORIZATION TO CHARGE ANY FEE DEFICIENCY

☑ The Director is hereby authorized to charge any maintenance fee, surcharge or petition deficiency to Deposit Account No. 502191

PAGE 2/5 * RCVD AT 3/17/2009 6:06:27 PM [Eastern Daylight Time] * SVR:USPTO-EFXRF-6/4 * DNIS:2738300 * CSID:714 546 9035 * DURATION (mm-ss):02-00

PTO/SB/68 (03-09)
Approved for use through 03/31/2012. OMB 0651-0016
U.S. Patent and Trademark Office; U.S. DEPARTMENT OF COMMERCE
Under the Paperwork Reduction Act of 1995, no persons are required to respond to a collection of information unless it displays a valid OMB control number

7. OVERPAYMENT

As to any overpayment made please

☑ Credit to Deposit Account No. 502191

OR

☐ Send refund check

WARNING:

Petitioner/applicant is cautioned to avoid submitting personal information in documents filed in a patent application that may contribute to identity theft. Personal information such as social security numbers, bank account numbers, or credit card numbers (other than a check or credit card authorization form PTO-2038 submitted for payment purposes) is never required by the USPTO to support a petition or an application. If this type of personal information is included in documents submitted to the USPTO, petitioners/applicants should consider redacting such personal information from the documents before submitting them to the USPTO. Petitioner/applicant is advised that the record of a patent application is available to the public after publication of the application (unless a non-publication request in compliance with 37 CFR 1.213(a) is made in the application or issuance of a patent. Furthermore, the record from an abandoned application may also be available to the public if the application is referenced in a published application or an issued patent (see 37 CFR 1.14). Checks and credit card authorization forms PTO-2038 submitted for payment purposes are not retained in the application file and therefore are not publicly available.

8. STATEMENT

The delay in payment of the maintenance fee to this patent was unintentional.

9. PETITIONER(S) REQUEST THAT THE DELAYED PAYMENT OF THE MAINTENANCE FEE BE ACCEPTED AND THE PATENT REINSTATED

Signature(s) of Petitioner(s) — Date: 2009-03-17

Hani Z. Sayed — Typed or printed name(s)

52544 — Registration Number, if applicable

714-641-5100 — Telephone Number

Rutan & Tucker, LLP — Address

611 Anton Blvd., Suite 1400, Costa Mesa, CA 92626 — Address

37 CFR 1.378(d) states: "Any petition under this section must be signed by an attorney or agent registered to practice before the Patent and Trademark Office, or by the patentee, the assignee, or other party in interest."

ENCLOSURES

☑ Maintenance Fee Payment

☑ Surcharge under 37 CFR 1.20(i)(2) (fee for filing the maintenance fee petition)

☑ Petition for Revival of Patent Abandoned Unintentionally Under 37 CFR 1.138(c)

PAGE 3/5 * RCVD AT 3/17/2009 6:06:27 PM [Eastern Daylight Time] * SVR:USPTO-EFXRF-6/4 * DNIS:2738300 * CSID:714 546 9035 * DURATION (mm-ss):02-00

SPE RESPONSE FOR CERTIFICATE OF CORRECTION

Paper No.: ____

DATE : 1/12/05

TO SPE OF : ART UNIT 3654

SUBJECT : Request for Certificate of Correction on Patent No.: 6805314

A response is requested with respect to the accompanying request for a certificate of correction.

Please complete this form and return with file, within 7 days to:
Certificates of Correction Branch - PK 3-915
Palm location **7580** - Tel. No. 305-8309

With respect to the change(s) requested, correcting Office and/or Applicant's errors, should the patent read as shown in the certificate of correction? No new matter should be introduced, nor should the scope or meaning of the claims be changed.

Virginia Tolbert

Thank You For Your Assistance **Certificates of Correction Branch**

The request for issuing the above-identified correction(s) is hereby:
Note your decision on the appropriate box.

- [x] **Approved** All changes apply.
- [ ] **Approved in Part** Specify below which changes do not apply.
- [ ] **Denied** State the reasons for denial below.

Comments:

Kathy Matecki

KATHY MATECKI
SUPERVISORY PATENT EXAMINER
TECHNOLOGY CENTER 3600

SPE

3654
Art Unit

SPE J, Nguyen

SPE RESPONSE FOR CERTIFICATE OF CORRECTION 10/408,594

Paper No.: _____

DATE : 9/15/05

TO SPE OF : ART UNIT 2851

SUBJECT : Request for Certificate of Correction on Patent No.: 6826367

A response is requested with respect to the accompanying request for a certificate of correction.

Please complete this form and return with file, within **7** days to:
Palm location **7580, Certificates of Correction Branch – South Tower – 9A22**
If response is for an IFW, **return to employee (named below) via PUBSCofC Team in MADRAS.**
With respect to the change(s) requested, correcting Office and/or Applicant's errors, should the patent read as shown in the certificate of correction (COCIN)? No new matter should be introduced, nor should the scope or meaning of the claims be changed.

Please Look at claims

Thank You For Your Assistance

Lamonte M. Newsome
Certificates of Correction Branch
Tel. No. 703-305-8309

The request for issuing the above-identified correction(s) is hereby:
Note your decision on the appropriate box.

- ☐ **Approved** — **All** changes apply.
- ☐ **Approved in Part** — Specify below which changes **do not** apply.
- ☒ **Denied** — State the reasons for denial below.

Comments:

Amendments change the scope of the claims

Judy Nguyen

JUDY NGUYEN
SUPERVISORY PATENT EXAMINER

CHRISTOPHER MAHONEY
PRIMARY EXAMINER

SPE

2851
Art Unit

UNITED STATES PATENT AND TRADEMARK OFFICE

COMMISSIONER FOR PATENTS
UNITED STATES PATENT AND TRADEMARK OFFICE
P.O. BOX 1450
ALEXANDRIA, VA 22313-1450
www.uspto.gov

Paper No. 3

WENDY K BUSKOP
BUSKOP LAW GROUP PC
1717 ST JAMES PLACE
SUITE 500
HOUSTON TX 77056

COPY MAILED

NOV 28 2003

OFFICE OF PETITIONS

In re Application of Von Krosigk, et al. Application No. 10/408,595 Filed: April 7, 2003 Attorney Docket No. 1093.10	: : : : :	ON PETITION

This is a decision on the petition to revive under 37 CFR 1.137(b), pursuant to 37 CFR 1.137(f), filed September 22, 2003 (Certificate of Mailing dated September 17, 2003).

The petition is **GRANTED**.

Petitioner states that the instant application is the subject of an international application filed on April 14, 2003. However, the US Patent and Trademark Office was unintentionally not notified of this filing within 45 days subsequent to the filing of the international application.

In view of the above, the application became abandoned pursuant to 35 USC 122(b)(2)(B)(iii) and 37 CFR 1.213(c) for failure to timely notify the Office of the filing of an application in a foreign country, or under a multilateral international agreement, that requires publication of applications 18 months after filing.

A petition under 37 CFR 1.137(f) must be accompanied by:

(1) the reply, which is met by the notification of such filing in a foreign country or under a multinational treaty;

(2) the petition fee as set forth in 37 CFR 1.17(m); and

(3) a statement that the entire delay in filing the required reply from the due date of the reply until the filing of a grantable petition was unintentional.

The instant petition has been found to be in compliance with 37 CFR 1.137(f). Accordingly, the failure to timely notify the Office of a foreign or international filing within 45 days after the date of filing of such foreign or international application as provided by 35 USC 122(b)(2)(B)(iii) and 37 CFR 1.213(c) is accepted as having been unintentionally delayed.

The previous Request and Certification under 35 USC 122(b)(2)(B)(i) has been rescinded. A Communication Regarding Rescission of Nonpublication Request and/or Notice of Foreign Filing which sets forth a projected publication date of March 4, 2004 accompanies this decision.

The application file is being forwarded to Technology Center 1700, Group Art Unit 1744, for examination in due course.

Telephone inquiries regarding this decision should be directed to the undersigned at (703) 305-0272.

Cliff Congo
Petitions Attorney
Office of Petitions

Enc: Communication Regarding Rescission of Nonpublication Request and/or Notice of Foreign Filing (1 page)

SPE RESPONSE FOR CERTIFICATE OF CORRECTION

Paper No.:20091122

DATE : November 22, 2009

TO SPE OF : ART UNIT 1621

SUBJECT : Request for Certificate of Correction on Patent No.: 7169957

A response is requested with respect to the accompanying request for a certificate of correction.

Please complete this form and return with file, within **7** days to:
Certificates of Correction Branch - ST (South Tower) 9A22
Palm location **7590** - Tel. No. (703) 305-8309

With respect to the change(s) requested, correcting Office and/or Applicant's errors, should the patent read as shown in the certificate of correction? No new matter should be introduced, nor should the scope or meaning of the claims be changed.

Thank You For Your Assistance **Certificates of Correction Branch**

The request for issuing the above-identified correction(s) is hereby:

Note your decision on the appropriated box.

☒ **Approved** All changes apply.

☐ **Approved in Part** Specify below which changes **do not** apply.

☐ **Denied** State the reasons for denial below.

Comments:

/DANIEL M SULLIVAN/
Supervisory Patent Examiner.Art Unit 1621

UNITED STATES PATENT AND TRADEMARK OFFICE

COMMISSIONER FOR PATENTS
UNITED STATES PATENT AND TRADEMARK OFFICE
P.O. BOX 1450
ALEXANDRIA, VA 22313-1450
www.uspto.gov

Paper No. 3

BUSKOP LAW GROUP, P.C.
SUITE 500
1717 ST. JAMES PLACE
HOUSTON TX 77056

COPY MAILED

NOV 1 4 2003

OFFICE OF PETITIONS

In re Application of	:	
Von Krosigk et al.	:	
Application No. 10/408,612	:	DECISION GRANTING PETITION
Filed: 7 April, 2003	:	
Attorney Docket No. 1093.08	:	

This is a decision on the petition, filed on 22 September, 2003, under 37 CFR 1.137(f) which is treated as a petition to revive the above-identified nonprovisional application under the unintentional provisions of 37 CFR 1.137(b).

The petition is **GRANTED**.

Petitioner states that the present nonprovisional application is the subject of a foreign or international application filed on 14 April, 2003. However, the U.S. Patent and Trademark Office was unintentionally not notified of this filing within 45 days subsequent to the filing of the subject application in a foreign country.

In view of the above, this application became abandoned pursuant to 35 U.S.C. § 122(b)(2)(B)(iii) and 37 CFR 1.213© for failure to timely notify the Office of the filing of an application in a foreign country, or under a multilateral international agreement, that requires publication of applications 18 months after filing.

A petition under 37 CFR 1.137(f) must be accompanied by:

(1) the reply which is met by the notification of such filing in a foreign country or under a multinational treaty;

(2) the petition fee as set forth in 37 CFR 1.17(m); and

(3) a statement that the entire delay in filing the required reply from the due date of the reply until the filing of a grantable petition was unintentional.

The present petition has been found to be in compliance with 37 CFR 1.137(f). Accordingly, the failure to timely notify the Office of a foreign or international filing within 45 days after the date of filing of such foreign or international application as provided by 35 U.S.C. § 122(b)(2)(B)(I) has been rescinded. A Communication Regarding Rescission of Nonpublication Request and/or Notice of Foreign Filing, which sets forth the projected publication date of 12 February, 2004, accompanies this decision on petition.

This decision is being forwarded to Technology Center 1600 for further processing.

Any inquiries concerning this decision may be directed to the undersigned at 703.308.6918.

DWood

Douglas I. Wood
Senior Petitions Attorney
Office of Petitions

Encl: Communication Regarding Rescission of Nonpublication Request and/or Notice of Foreign Filing

UNITED STATES PATENT AND TRADEMARK OFFICE

Commissioner for Patents
United States Patent and Trademark Office
P.O. Box 1450
Alexandria, VA 22313-1450
www.uspto.gov

Paper No. 6

PATENT LEGAL DEPARTMENT/A-42-C
BECKMAN COULTER, INC.
4300 N. HARBOR BOULEVARD
BOX 3100
FULLERTON, CA 92834-3100

COPY MAILED
JUL 0 1 2004
OFFICE OF PETITIONS

In re Application of :
M. Parameswara Reddy, et al. :
Application No. 10/408,626 :
Filed: April 7, 2003 :
Attorney Docket No. 2063-181 :

ON PETITION

This is a decision on the petition under 37 CFR 1.137(b), filed May 24, 2004, to revive the above-identified application.

The petition is **GRANTED.**

The above-identified application became abandoned for failure to reply in a timely manner to the Notice to Comply with Requirements for Patent Applications Containing Nucleotide Sequence and/or Amino Acid Sequence Disclosures (Notice) mailed July 17, 2003. The Notice set a period for reply of two (2) months from the mail date of the Notice. No extensions of time under the provisions of 37 CFR 1.136(a) were obtained. Accordingly, the above-identified application became abandoned on September 18, 2003.

There is no indication that the person signing the instant petition was ever given a power of attorney or authorization of agent to prosecute the above-identified application. However, in accordance with 37 CFR 1.34, the signature of Kristin C. Hiibner appearing on the petition shall constitute a representation to the United States Patent and Trademark Office that he/she is authorized to represent the particular party in whose behalf he/she acts. If Kristin C. Hiibner desires to receive future correspondence regarding this application, an appropriate power of attorney or authorization of agent must be submitted. A courtesy copy of this decision is being mailed to petitioner. Nevertheless, all future correspondence will be directed solely to the address of record until otherwise instructed.

The application file is being forwarded to the Office of Initial Patent Examination for further processing.

Telephone inquiries concerning this decision should be directed to the undersigned at (703) 306-5594.

Retta Williams

Retta Williams
Petitions Examiner
Office of Petitions
Office of the Deputy Commissioner
for Patent Examination Policy

cc: Kristin C. Hiibner
Sheldon & Mak
225 South Lake Avenue, Suite 900
Pasadena, CA 91101

UNITED STATES PATENT AND TRADEMARK OFFICE

COMMISSIONER FOR PATENTS
UNITED STATES PATENT AND TRADEMARK OFFICE
P.O. BOX 1450
ALEXANDRIA, VA 22313-1450
WWW.USPTO.GOV

Paper No. 4

MYERS BIGEL SIBLEY & SAJOVEC
PO BOX 37428
RALEIGH NC 27627

COPY MAILED

JUL 2 5 2003

OFFICE OF PETITIONS

In re Application of
Hyun, et al.
Application No. 10/408,630
Filed: April 7, 2003
Attorney Docket No. 5649-1106
For: METHODS OF FABRICATING OXIDE LAYERS BY PLASMA NITRIDATION AND OXIDATION

DECISION GRANTING PETITION

This is a decision on the petition under 37 CFR 1.10(c), filed June 24, 2003 (certificate of mailing date June 20, 2003), requesting that the above-identified application be accorded a filing date of April 7, 2003 rather than the presently accorded filing date of April 8, 2003.

Petitioners request the earlier filing date on the basis that the application was deposited in Express Mail service of the United States Postal Service (USPS) on April 7, 2003, pursuant to the requirements of 37 CFR 1.10. The petition is accompanied by a copy of Express Mail label no. EV193585945US showing no "date-in" **and** a USPS date stamp of APR 7 2003. The same Express Mail label number is listed on the original Utility Patent Application Transmittal Letter and Fee Transmittal Form found in the application file.

The evidence presented establishes that the Express Mail package associated with Express Mail label no. EV193585945US was deposited with the USPS on April 7, 2003.

Accordingly, the petition is granted.

No fee has been or will be charged in connection with this petition.

The application is being returned to the Office of Initial Patent Examination for correction of the filing date to **April 7, 2003**.

Any inquiries related to this decision should be directed to Petitions Attorney E. Shirene Willis at (703) 308-6712.

Beverly M. Flanagan
Supervisory Petitions Examiner
Office of Petitions
Office of the Deputy Commissioner
for Patent Examination Policy

BEST AVAILABLE COPY

UNITED STATES PATENT AND TRADEMARK OFFICE

COMMISSIONER FOR PATENTS
UNITED STATES PATENT AND TRADEMARK OFFICE
P.O. BOX 1450
ALEXANDRIA, VA 22313-1450
www.uspto.gov

MYERS BIGEL SIBLEY & SAJOVEC
P.O. BOX 37428
RALEIGH, NC 27627

COPY MAILED
AUG 05 2003
OFFICE OF PETITIONS

In re Application of	:	
Choi, et al.	:	DECISION GRANTING
Application No. 10/408,631	:	PETITION
Filed: April 7, 2003	:	
Attorney Docket No. 5649-1030	:	

This is a decision on the petition under 37 CFR 1.10(c), filed June 25, 2003, requesting that the above-identified application be accorded a filing date of April 7, 2003, rather than the presently accorded filing date of April 8, 2003.

Petitioners allege that the application was deposited in Express Mail service on April 7, 2003. In support, the petition is accompanied by a copy of Express Mail Receipt No. EV193629363US (the same Express Mail number found on the original application papers located in the official file) showing a date stamp by the USPS that indicates it was placed in Express Mail service on April 7, 2003.

In view of the above, the petition is **GRANTED**.

Accordingly, the application is entitled to a filing date of April 7, 2003.

The application is being returned to the Office of Initial Patent Examination for processing with a filing date of April 7, 2003 and issuance of a corrected filing receipt. Thereafter, the application will be forwarded to Technology Center 2800 for examination in due course.

Telephone inquiries concerning this matter may be directed to Petitions Attorney Edward Tannouse at (703) 306-9200.

Edward J. Tannouse
Petitions Attorney
Office of Petitions
United States Patent and Trademark Office

UNITED STATES PATENT AND TRADEMARK OFFICE

UNITED STATES DEPARTMENT OF COMMERCE
United States Patent and Trademark Office
Address: COMMISSIONER FOR PATENTS
P.O. Box 1450
Alexandria, Virginia 22313-1450
www.uspto.gov

Steven W. Weinrieb
LAW OFFICES OF STEVEN W. WEINRIEB
8717 Cold Spring Road
Potomac, MD 20854

Mail Date: 04/26/2010

Applicant	: Andrzej Chojnacki	: DECISION ON REQUEST FOR
Patent Number	: 7631677	: RECALCULATION of PATENT
Issue Date	: 12/15/2009	: TERM ADJUSTMENT IN VIEW
Application No	: 10/408,639	: OF WYETH AND NOTICE OF INTENT TO
Filed	: 04/07/2003	: ISSUE CERTIFICATE OF CORRECTION
		:

The Request for Recalculation is **GRANTED** to the extent indicated.

The patent term adjustment has been determined to be **965** days. The USPTO will *sua sponte* issue a certificate of correction reflecting the amount of PTA days determined by the recalculation.

Prior to the issuance of the certificate of correction, the USPTO will afford patentee an opportunity to be heard and request reconsideration. Accordingly, patentee has **one month or thirty (30) days**, whichever is longer, to file a request for reconsideration of this patent term adjustment calculation. See 35 U.S.C. 154(b)(3)(B)(ii) and 37 CFR 1.322(a)(4). No extensions of time will be granted under 37 CFR 1.136.

Patentee should use document code PET.OP if electronically filing a request for reconsideration of this patent term adjustment calculation. The patentee must also include the information required by 37 CFR 1.705(b)(2) and the fee required by 37 CFR 1.18(e). If patentee does not file a timely request for reconsideration of this patent term adjustment calculation including the information required by 37 CFR 1.705(b)(2) and the fee required by 37 CFR 1.18(e), the USPTO will issue a certificate of correction reflecting the PTA determination noted above.

Patentee should be aware that in order to preserve the right to review in the United States District Court for the District of Columbia of the USPTO patent term adjustment determination, patentee must ensure that he or she also take the steps required under 35 U.S.C. 154(b)(4)(A) in a timely manner. Nothing in the request for recalculation should be construed as providing an alternative time frame for commencing a civil action under 35 U.S.C. 154(b)(4)(A).

Any questions concerning this decision should be directed to the Office of Patent Legal Administration at 571-272-7702.

UNITED STATES PATENT AND TRADEMARK OFFICE

Commissioner for Patents
United States Patent and Trademark Office
P.O. Box 1450
Alexandria, VA 22313-1450
www.uspto.gov

NIXON PEABODY, LLP
401 9TH STREET, NW
SUITE 900
WASHINGTON, DC 20004-2128

COPY MAILED
OCT 13 2005
OFFICE OF PETITIONS

In re Application of	:	
Rajan et al.	:	DECISION GRANTING PETITION
Application No. 10/408,658	:	UNDER 37 CFR 1.78(a)(3)
Filed: April 8, 2003	:	
Attorney Docket No. 031066/001300	:	

This is a decision on the petition under 37 CFR 1.78(a)(3), filed August 12, 2005, to accept an unintentionally delayed claim under 35 U.S.C. § 120 for the benefit of priority to the prior-filed nonprovisional Application No. 08/867,910, filed June 3, 1997.

The petition is **GRANTED**.

A petition for acceptance of a claim for late priority under 37 CFR 1.78(a)(3) is only applicable to those applications filed on or after November 29, 2000. Further, the petition is appropriate only after the expiration of the period specified in 37 CFR 1.78(a)(2)(ii). In addition, the petition under 37 CFR 1.78(a)(3) must be accompanied by:

(1) the reference required by 35 U.S.C. § 120 and 37 CFR 1.78(a)(2)(i) of the prior-filed application, unless previously submitted;
(2) the surcharge set forth in § 1.17(t); and
(3) a statement that the entire delay between the date the claim was due under 37 CFR 1.78(a)(2)(ii) and the date the claim was filed was unintentional. The Director may require additional information where there is a question whether the delay was unintentional.

The instant nonprovisional application was filed after November 29, 2000, and the claim herein for the benefit of priority to the prior-filed nonprovisional application is submitted after expiration of the period specified in 37 CFR 1.78(a)(2)(ii). Therefore, this is a proper petition under 37 CFR 1.78(a)(3).

The petition complies with the requirements for a grantable petition under 37 CFR 1.78(a)(3) in that (1) a reference to the above-noted, prior-filed nonprovisional Application No. 08/867,910 has been included in an amendment to the first sentence of the specification following the title, as provided by

37 CFR 1.78(a)(2)(iii); (2) the surcharge fee required by 37 CFR 1.17(t) has been submitted; and (3) the petition contains an adequate statement of unintentional delay.[1] Accordingly, having found that the instant petition for acceptance of an unintentionally delayed claim for the benefit of priority under 35 U.S.C. § 120 to the above-noted, prior-filed nonprovisional application satisfies the conditions of 37 CFR 1.78(a)(3), the petition is granted.

The granting of the petition to accept the delayed benefit claim to the prior-filed application under 37 CFR 1.78(a)(3) should not be construed as meaning that the instant application is entitled to the benefit of the prior-filed application. In order for the instant application to be entitled to the benefit of the prior-filed application, all other requirements under 35 U.S.C. § 120 and 37 CFR 1.78(a)(1) and (a)(2) must be met. Similarly, the fact that the corrected Filing Receipt accompanying this decision on petition includes the prior-filed application should not be construed as meaning that applicant is entitled to the claim for benefit of priority to the prior-filed application noted thereon. Accordingly, the examiner will, in due course, consider this benefit claim and determine whether the instant application is entitled to the benefit of the earlier filing date.

On February 9, 2004, the Office mailed applicant a corrected Filing Receipt, which included the priority claim to the prior-filed nonprovisional Application No. 08/867,910, filed June 3, 1997. A copy of the corrected Filing Receipt of February 9, 2004, accompanies this decision.

Any inquiries concerning this decision may be directed to Senior Petitions Attorney Christina Tartera Donnell at (571) 272-3211. All other inquiries concerning either the examination procedures or status of the application should be directed to the Technology Center.

This matter is being referred to Technology Center Art Unit 1724 for consideration by the examiner of applicant's entitlement to claim benefit of priority under 35 U.S.C. § 120 to the prior-filed nonprovisional Application No. 08/867,910, filed June 3, 1997.

Frances Hicks

Frances Hicks
Lead Paralegal
Office of Petitions
Office of the Deputy Commissioner
for Patent Examination Policy

ATTACHMENT: Corrected Filing Receipt

---

[1] 37 CFR 1.78(a)(3) requires a statement that the entire delay between the date the claim was due under 37 CFR 1.78(a)(2)(ii) and the date the claim was filed was unintentional. Because the statement contained in the instant petition varies from the language required by 37 CFR 1.78(a)(3), the statement contained in the instant petition is being construed as the statement required by 37 CFR 1.78(a)(3).

UNITED STATES PATENT AND TRADEMARK OFFICE

Commissioner for Patents
United States Patent and Trademark Office
P.O. Box 1450
Alexandria, VA 22313-1450
www.uspto.gov

OPTV/MOFO
C/O MORRISON & FOERSTER LLP
1650 TYSONS BOULEVARD, SUITE 300
MCLEAN VA 22102

COPY MAILED

NOV 16 2006

OFFICE OF PETITIONS

In re Application of

ZENONI, Ian
Application No. 10/408,664
Filed: April 4, 2003
Attorney Docket No. INTE.49USU1 (ITC49)

DECISION ON PETITION
TO WITHDRAW
FROM RECORD

This is a decision on the Request to Withdraw as attorney or agent of record under 37 C.F.R. § 1.36(b), filed September 14, 2006.

The request is **NOT APPROVED**.

A grantable request to withdraw as attorney/agent of record must be signed by every attorney/agent seeking to withdraw or contain a clear indication that one attorney is signing on behalf of another/others. A request to withdraw will not be approved unless at least 30 (thirty) days would remain between the date of approval and the later of the expiration date of a time to file a response or the expiration date of the maximum time period which can be extended under 37 C.F.R. § 1.136(a).

The Office cannot approve the request at this time since the reasons provided do not meet any of the conditions under the mandatory or permissive categories enumerated in 37 CFR 10.40. Section 10.40 of Title 37 of the Code of Federal Regulation states, "[a] practitioner shall not withdraw from employment in a proceeding before the Office without permission from the Office[.]" More specifically, 37 CFR 10.40 states, "[i]f paragraph (b) of this section is not applicable, a practitioner may not request permission to withdraw in matter pending before the Office unless such request or such withdrawal is" for one the permissive reasons listed in 37 CFR 10.40(c). The reasons set forth in the request, "application is being transferred to another attorney", does not meet any of the conditions set forth in 37 CFR 10.40.

All future communications from the Office will continue to be directed to the above-listed address until otherwise notified by applicant.

Telephone inquiries concerning this decision should be directed to the undersigned at 571-272- 7253.

Monica A. Graves
Petitions Examiner
Office of Petitions

cc: Marc Kaufman, Esq.
Nixon Peabody LLP
401 9th Street NW, Suite 900
Washington, DC 20004

UNITED STATES PATENT AND TRADEMARK OFFICE

Commissioner for Patents
United States Patent and Trademark Office
P.O. Box 1450
Alexandria, VA 22313-1450
www.uspto.gov

OPTV/MOFO
C/O MORRISON & FOERSTER LLP
1650 TYSONS BOULEVARD, SUITE 300
MCLEAN VA 22102

COPY MAILED

JUL 0 5 2007

OFFICE OF PETITIONS

In re Application of	:	
ZENONI, Ian	:	
Application No. 10/408,664	:	DECISION ON PETITION
Filed: April 4, 2003	:	TO WITHDRAW
Attorney Docket No. **INTE.49USU1 (ITC49)**	:	FROM RECORD
	:	

This is a decision on the renewed Request to Withdraw as attorney or agent of record under 37 C.F.R. § 1.36(b), filed January 17, 2007.

The request is **APPROVED**.

A grantable request to withdraw as attorney/agent of record must be signed by every attorney/agent seeking to withdraw or contain a clear indication that one attorney is signing on behalf of another/others. A request to withdraw will not be approved unless at least 30 (thirty) days would remain between the date of approval and the later of the expiration date of a time to file a response or the expiration date of the maximum time period which can be extended under 37 C.F.R. § 1.136(a).

The request was signed by Adam Keser on behalf of all attorneys of record. All attorneys/agents associated have been withdrawn. Applicant is reminded that there is no attorney of record at this time.

The request to change the correspondence of record is not acceptable as the requested correspondence address is not that of: (1) the first named signing inventor; or (2) an intervening assignee of the entire interest under 37 C.F.R 3.71. All future communications from the Office will be directed to the first named signing inventor at the first copied address below until otherwise properly notified by the applicant.

There is an outstanding Office action mailed June 25, 2007 that requires a reply from the applicant. Telephone inquiries concerning this decision should be directed to the undersigned at 571-272-7253.

Monica A. Graves
Petitions Examiner
Office of Petitions

cc: **IAN ZENONI**
759 E. REDWOOD COURT
HIGHLANDS RANCH, CO 80126

cc: **MARC KAUFMAN, ESQ.**
NIXON PEABODY LLP
401 9TH STREET NW, SUITE 900
WASHINGTON, DC 20004

UNITED STATES PATENT AND TRADEMARK OFFICE

UNITED STATES DEPARTMENT OF COMMERCE
United States Patent and Trademark Office
Address: COMMISSIONER FOR PATENTS
P.O. Box 1450
Alexandria, Virginia 22313-1450
www.uspto.gov

GENZYME CORPORATION
LEGAL DEPARTMENT
15 PLEASANT ST CONNECTOR
FRAMINGHAM, MA 01701-9322

Mail Date: 04/21/2010

Applicant	: Yunxiang Zhu	: DECISION ON REQUEST FOR
Patent Number	: 7658916	: RECALCULATION of PATENT
Issue Date	: 02/09/2010	: TERM ADJUSTMENT IN VIEW
Appliction No	: 10/408,670	: OF WYETH AND NOTICE OF INTENT TO
Filed	: 04/04/2003	: ISSUE CERTIFICATE OF CORRECTION
		:

The Request for Recalculation is **GRANTED** to the extent indicated.

The patent term adjustment has been determined to be **448** days. The USPTO will *sua sponte* issue a certificate of correction reflecting the amount of PTA days determined by the recalculation.

Prior to the issuance of the certificate of correction, the USPTO will afford patentee an opportunity to be heard and request reconsideration. Accordingly, patentee has **one month or thirty (30) days**, whichever is longer, to file a request for reconsideration of this patent term adjustment calculation. See 35 U.S.C. 154(b)(3)(B)(ii) and 37 CFR 1.322(a)(4). No extensions of time will be granted under 37 CFR 1.136.

Patentee should use document code PET.OP if electronically filing a request for reconsideration of this patent term adjustment calculation. The patentee must also include the information required by 37 CFR 1.705(b)(2) and the fee required by 37 CFR 1.18(e). If patentee does not file a timely request for reconsideration of this patent term adjustment calculation including the information required by 37 CFR 1.705(b)(2) and the fee required by 37 CFR 1.18(e), the USPTO will issue a certificate of correction reflecting the PTA determination noted above.

Patentee should be aware that in order to preserve the right to review in the United States District Court for the District of Columbia of the USPTO patent term adjustment determination, patentee must ensure that he or she also take the steps required under 35 U.S.C. 154(b)(4)(A) in a timely manner. Nothing in the request for recalculation should be construed as providing an alternative time frame for commencing a civil action under 35 U.S.C. 154(b)(4)(A).

Any questions concerning this decision should be directed to the Office of Patent Legal Administration at 571-272-7702.

UNITED STATES PATENT AND TRADEMARK OFFICE

COMMISSIONER FOR PATENTS
UNITED STATES PATENT AND TRADEMARK OFFICE
P.O. BOX 1450
ALEXANDRIA, VA 22313-1450
www.uspto.gov

PATENT ADMINSTRATOR
KATTEN MUCHIN ZAVIS ROSENMAN
525 WEST MONROE STREET
SUITE 1600
CHICAGO IL 60661-3693

MAIL

AUG 1 6 2004

DIRECTOR OFFICE
TECHNOLOGY CENTER 2600

In re Application of
Gerald Morrison, et al.
Application No. 10/408,671
Filed: April 8, 2003
For: **PASSIVE TOUCH SYSTEM AND METHOD OF DETECTING USER INPUT**

DECISION ON PETITION TO MAKE SPECIAL

This is a decision on the petition filed August 27, 2003 under 37 CFR §1.102(d) to make the application special.

A grantable petition under 37 CFR §1.102(d) and MPEP §708.02, section II (Infringement), must be accompanied by the required fee and a statement alleging:

(1) that there is an infringing device or product actually on the market or method in use;
(2) that a rigid comparison of the alleged infringing device, product, or method with the claims of the application has been made, and that, in his or her opinion, some of the claims are unquestionably infringed; and
(3) that he or she has made or caused to be made a careful and thorough search of the prior art or has a good knowledge of the pertinent prior art. Further, Applicant must provide a copy of each of the references deemed most closely related to the subject matter encompassed by the claims if the references are not already of record.

The petitioner meets all the above-listed requirements. Accordingly, the petition is **GRANTED**.

The application will retain its special status throughout its entire prosecution, including any appeal to the Board of Patent Appeals and Interferences, subject only to diligent prosecution by the applicant.

The application is being forwarded to the examiner for expedited prosecution.

Dwayne D. Bost
Special Program Examiner
Technology Center 2600
Communications
(703) 305-4778

UNITED STATES PATENT AND TRADEMARK OFFICE

COMMISSIONER FOR PATENTS
UNITED STATES PATENT AND TRADEMARK OFFICE
P.O. BOX 1450
ALEXANDRIA, VA 22313-1450
www.uspto.gov

Paper No. 5

WOOD, PHILLIPS, KATZ, CLARK & MORTIMER
500 W. MADISON STREET
SUITE 3800
CHICAGO IL 60661

COPY MAILED

DEC 03 2003

OFFICE OF PETITIONS

In re Application of
Michael Putnam et al.
Application No. 10/408,719
Filed: April 7, 2003
Attorney Docket No. PGI6044P0891US

DECISION REFUSING STATUS
UNDER 37 CFR 1.47(a)

This is in response to the petition filed under 37 CFR 1.47(a) on November 4, 2003.

The petition is **DISMISSED**.

Rule 47 applicant is given TWO MONTHS from the mailing date of this decision to respond, correcting the below-noted deficiencies. Any response should be entitled "Request for Reconsideration of Petition Under 37 CFR 1.47(a). and may include an oath or declaration executed by the inventor. **Failure to respond will result in abandonment of the application**. Any extensions of time will be governed by 37 CFR 1.136(a).

The above-identified application was filed on April 7, 2003, with an oath or declaration that was unexecuted and naming Michael Putnam, Cynthia McNaull, Russell Tindall, Nick Carter Kayren Joy Nunn as joint inventors.

Accordingly, on June 4, 2003, a "Notice To File Missing Parts of Application" was mailed, requiring an executed oath or declaration, and a surcharge for the late filing of the oath or declaration. A two month period for reply was set.

In response, on November 4, 2003, the instant petition and request for a three month extension of time (with fees and authorization to charge the deposit account for deficiencies) was filed, requesting status under 37 CFR 1.47 because joint inventor Nun by her actions refused to sign the declaration.

A statement made by the attorney of record indicates that Ms. Nun referred Ms. Steel, an employee of the assignee Polymer Group, Inc., to send the "declaration" to attorney John Carwile.

A grantable petition under 37 CFR 1.47(a) requires: (1) proof that the non-signing inventor cannot be reached or refuses to sign the oath or declaration after having been presented with the application papers (specification, claims and drawings); (2) an acceptable oath or declaration in compliance with 35 U.S.C. §§ 115 and 116; (3) the petition fee; and (4) a statement of the last known address of the non-signing inventor. Applicant lacks items (1) set forth above.

In regards to item (1), petitioners have not provided sufficient proof that a copy of the application (specification, including claims, drawings, if any, and the declaration) was sent

to the non-signing inventor. The statement made by Mr. Hoover is that the "declaration" was faxed to Mr. Carwile on August 11, 2003 and that Ms. Nunn suggested in an E-mail dated September 2, 2003 that Ms. Steel telephone Mr. Carwile regarding issues that needed to be addressed.

No copies of any of the referenced correspondences has been provided and neither has proof that a copy of the application papers including specification and drawings (if drawings were required) were sent to the non-signing inventor or her representative, Mr. Carwile. There is no evidence to show that Ms. Nunn or Mr. Carwile had the benefit of seeing the application.

Petitioners may show proof that a copy of the application was sent or given to the non-signing inventor for review by providing a copy of the cover letter transmitting the application papers to the non-signing inventor or details given in an affidavit or declaration of facts by a person having first hand knowledge of the details.

Likewise, before a *bona fide* refusal can be shown, the non-signing inventor must have been given an opportunity to review the application. Therefore, petitioners must show proof that the non-signing inventor refuses to sign the declaration after being sent or given a copy of the application papers. If there is a written refusal, petitioners should submit a copy of that refusal with any renewed petition. If the refusal was made orally to a person, then that person must provide details of the refusal in an affidavit or declaration of facts.

Further correspondence with respect to this matter should be addressed as follows:

By mail: Assistant Commissioner for Patents
Box DAC
Washington, D.C. 20231

By FAX: (703) 872-9306

Telephone inquiries concerning this matter may be directed to the undersigned Petitions Attorney at (703)305-4497.

Patricia Faison-Ball

Patricia Faison-Ball
Senior Petitions Attorney
Office of Petitions

UNITED STATES PATENT AND TRADEMARK OFFICE

COMMISSIONER FOR PATENTS
UNITED STATES PATENT AND TRADEMARK OFFICE
P.O. BOX 1450
ALEXANDRIA, VA 22313-1450
www.uspto.gov

Paper No. 11

WOOD, PHILLIPS, KATZ, CLARK & MORTIMER
500 W. MADISON STREET
SUITE 3800
CHICAGO IL 60661

COPY MAILED

APR 1 9 2004

OFFICE OF PETITIONS

In re Application of
Michael Putnam et al.
Application No. 10/408,719
Filed: April 7, 2003
Attorney Docket No. PGI6044P0891US

DECISION NOTING JOINDER OF INVENTOR AND PETITION UNDER 37 CFR 1.47(a) DISMISSED AS INVOLVING MOOT ISSUES

A petition under 37 CFR 1.47(a) was filed November 4, 2003 and was dismissed in a decision mailed December 3, 2003.

In response, papers filed on February 3, 2004, in reply to the "Decision Refusing Status Under 37 CFR 1.47(a)" mailed December 3, 2003, included a statement made by Registered Patent Attorney, Allen J. Hoover, showing that on two separate occasions, copies of the complete application for the above identified patent application were sent to joint inventor Kayren Joy Nunn's attorney, John Carwile. Copies of the letters sent to Mr. Carwile on November 6, 2003 (facsimile transmission) and December 12, 2003 (sent via FEDEX) were submitted as proof.

Subsequently, on March 3, 2004, prior to a decision on the renewed petition filed February 3, 2004 which claimed that non-signing inventor Kayren Joy Nunn refused to sign the Oath or Declaration, papers were filed which included a Declaration signed by the previously non-signing inventor, Kayren Joy Nunn, in compliance with 37 CFR 1.63.

In view of the joinder of the inventor, further consideration under 37 CFR 1.47(a) is unnecessary.

The renewed petition filed February 3, 2004 is **dismissed** as involving moot issues.
The renewed petition filed March 3, 2004 is **dismissed** as involving moot issues.

This application does not have any rule 1.47(a) status and no such status should appear on the file wrapper. This application need not be returned to this office for any further consideration under 37 CFR 1.47(a).

This application will be forwarded to the Office of Initial Patent Examination for further processing.

Telephone inquiries related to this decision should be directed to the undersigned Petitions Attorney at (703) 305-4497.

Patricia Faison-Ball

Patricia Faison-Ball
Senior Petitions Attorney
Office of Petitions

UNITED STATES PATENT AND TRADEMARK OFFICE

UNITED STATES DEPARTMENT OF COMMERCE
United States Patent and Trademark Office
Address: COMMISSIONER FOR PATENTS
P.O. Box 1450
Alexandria, Virginia 22313-1450
www.uspto.gov

William S. Frommer, Esq.
FROMMER LAWRENCE & HAUG LLP
745 Fifth Avenue
New York, NY 10151

Mail Date: 05/13/2010

Applicant	: Mitsuru Goto	: DECISION ON REQUEST FOR
Patent Number	: 7634261	: RECALCULATION of PATENT
Issue Date	: 12/15/2009	: TERM ADJUSTMENT IN VIEW
Application No	: 10/408,722	: OF WYETH AND NOTICE OF INTENT TO
Filed	: 04/07/2003	: ISSUE CERTIFICATE OF CORRECTION
		:

The Request for Recalculation is **GRANTED** to the extent indicated.

The patent term adjustment has been determined to be **1358** days. The USPTO will *sua sponte* issue a certificate of correction reflecting the amount of PTA days determined by the recalculation.

Prior to the issuance of the certificate of correction, the USPTO will afford patentee an opportunity to be heard and request reconsideration. Accordingly, patentee has **one month or thirty (30) days**, whichever is longer, to file a request for reconsideration of this patent term adjustment calculation. See 35 U.S.C. 154(b)(3)(B)(ii) and 37 CFR 1.322(a)(4). No extensions of time will be granted under 37 CFR 1.136.

Patentee should use document code PET.OP if electronically filing a request for reconsideration of this patent term adjustment calculation. The patentee must also include the information required by 37 CFR 1.705(b)(2) and the fee required by 37 CFR 1.18(e). If patentee does not file a timely request for reconsideration of this patent term adjustment calculation including the information required by 37 CFR 1.705(b)(2) and the fee required by 37 CFR 1.18(e), the USPTO will issue a certificate of correction reflecting the PTA determination noted above.

Patentee should be aware that in order to preserve the right to review in the United States District Court for the District of Columbia of the USPTO patent term adjustment determination, patentee must ensure that he or she also take the steps required under 35 U.S.C. 154(b)(4)(A) in a timely manner. Nothing in the request for recalculation should be construed as providing an alternative time frame for commencing a civil action under 35 U.S.C. 154(b)(4)(A).

Any questions concerning this decision should be directed to the Office of Patent Legal Administration at 571-272-7702.

UNITED STATES PATENT AND TRADEMARK OFFICE

Commissioner for Patents
United States Patent and Trademark Office
P.O. Box 1450
Alexandria, VA 22313-1450
www.uspto.gov

FISH & NEAVE IP GROUP
ROPES & GRAY LLP
ONE INTERNATIONAL PLACE
BOSTON MA 02110-2624

COPY MAILED
OCT 31 2006
OFFICE OF PETITIONS

In re Application of
Yan Chang, et al.
Application No. 10/408,723
Filed: April 7, 2003
Attorney Docket No. GLYO-P02-002

DECISION ON PETITION
TO WITHDRAW
FROM RECORD

This is a decision on the Request to Withdraw as attorney or agent of record under 37 C.F.R. § 1.36(b) filed July 24, 2006.

The request is **APPROVED**.

A grantable request to withdraw as attorney/agent of record must be signed by every attorney/agent seeking to withdraw or contain a clear indication that one attorney is signing on behalf of another/others. A request to withdraw will not be approved unless at least 30 (thirty) days would remain between the date of approval and the later of the expiration date of a time to file a response or the expiration date of the maximum time period which can be extended under 37 C.F.R. § 1.136(a).

The request was signed by David P. Halstead on behalf of all attorneys of record who are associated with this application.

All attorneys/agents associated with this application have been withdrawn.

Applicant is reminded that there is no attorney of record at this time.

The request to change the correspondence of record is not acceptable as the requested correspondence address is not that of: (1) the first named signing inventor; or (2) an intervening assignee of the entire interest under 37 C.F.R 3.71. All future communications from the Office will be directed to the first named signing inventor at the first copied address below until otherwise properly notified by the applicant.

Telephone inquiries concerning this decision should be directed to April Wise at 571-272-1642.

April Wise
Petitions Examiner
Office of Petitions

cc: Yan Chang
79 Winter Street
Ashland, MA 01721

cc: Mark G. DeGiacomo
Murtha Cullina LLP
99 High Street
20th Floor
Boston, MA 02110

UNITED STATES PATENT AND TRADEMARK OFFICE

UNITED STATES DEPARTMENT OF COMMERCE
United States Patent and Trademark Office
Address: COMMISSIONER FOR PATENTS
P.O. Box 1450
Alexandria, Virginia 22313-1450
www.uspto.gov

APPLICATION NUMBER	FILING OR 371 (c) DATE	FIRST NAMED APPLICANT	ATTY. DOCKET NO./TITLE
10/408,723	04/07/2003	Yan Chang	GLYO-P02-002

CONFIRMATION NO. 5564

OC000000021016368

OC000000021016368

28120
FISH & NEAVE IP GROUP
ROPES & GRAY LLP
ONE INTERNATIONAL PLACE
BOSTON, MA 02110-2624

Date Mailed: 10/27/2006

NOTICE REGARDING CHANGE OF POWER OF ATTORNEY

This is in response to the Power of Attorney filed 07/24/2006.

- The withdrawal as attorney in this application has been accepted. Future correspondence will be mailed to the new address of record. 37 CFR 1.33.

April M Wise

APRIL M WISE
OP (571) 272-1642

FORMER ATTORNEY/AGENT COPY

UNITED STATES PATENT AND TRADEMARK OFFICE

COMMISSIONER FOR PATENTS
UNITED STATES PATENT AND TRADEMARK OFFICE
P.O. BOX 1450
ALEXANDRIA, VA 22313-1450
www.uspto.gov

BRINKS HOFER GILSON & LIONE
P.O. BOX 10395
CHICAGO, IL 60610

COPY MAILED

DEC 04 2003

OFFICE OF PETITIONS

In re Application of
Hironori Kato and Yoshio
Sanpei
Application No. 10/408,749
Filed: April 7, 2003
Title: CONTROLLER WITH FAIL-SAFE FUNCTION

: DECISION GRANTING PETITION
: UNDER 37 CFR 1.47(a)

This is in response to the "Petition Under 37 CFR 1.47(a)," filed November 17, 2003.

The petition is **granted**.

Petitioner has shown that the non-signing inventor has refused to join in the filing of the above-identified application.

The above-identified application and papers have been reviewed and found in compliance with 37 CFR 1.47(a). This application is hereby accorded Rule 1.47(a) status. As provided in Rule 1.47(c), this Office will forward notice of this application's filing to the non-signing inventor at the address given in the Declaration. Notice of the filing of this application will also be published in the Official Gazette.

The file is being forwarded to the Office of Initial Patent Examination for further processing.

Telephone inquiries regarding this decision should be directed to the undersigned at (703) 306-9200.

Edward J. Tannouse
Petitions Attorney
Office of Petitions
United States Patent and Trademark Office

UNITED STATES PATENT AND TRADEMARK OFFICE

COMMISSIONER FOR PATENTS
UNITED STATES PATENT AND TRADEMARK OFFICE
P.O. BOX 1450
ALEXANDRIA, VA 22313-1450
www.uspto.gov

HIRONORI KATO
1-12-24-207 HEISEI
MIYAGINO-KU, SENDAI-SHI, MIYAGI-KEN
JAPAN

COPY MAILED

DEC 04 2003

OFFICE OF PETITIONS

In re Application of
Hironori Kato and Yoshio Sanpei
Application No. 10/408,749
Filed: April 7, 2003
Title: CONTROLLER WITH FAIL-SAFE FUNCTION

Dear HIRONORI KATO:

You are named as a joint inventor in the above identified United States patent application, filed under the provisions of 35 U.S.C. 116 (United States Code), and 37 CFR 1.47(a), Rules of Practice in Patent Cases. Should a patent be granted on the application you will be designated therein as a joint inventor.

As a named inventor you are entitled to inspect any paper in the file wrapper of the application, order copies of all or any part thereof (at a prepaid cost per 37 CFR 1.19) or make your position of record in the application. Alternatively, you may arrange to do any of the preceding through a registered patent attorney or agent presenting written authorization from you. If you care to join the application, counsel of record (see below) would presumably assist you. Joining in the application would entail the filing of an appropriate oath or declaration by you pursuant to 37 CFR 1.63.

Telephone inquiries regarding this communication should be directed to Petitions Attorney Edward Tannouse at (703) 306-9200. Requests for information regarding your application should be directed to the File Information Unit at (703) 308-2733. Information regarding how to pay for and order a copy of the application, or a specific paper in the application, should be directed to Certification Division at (703) 308-9726 or 1(800) 972-6382 (outside the Washington D.C. area).

Edward J. Tannouse
Petitions Attorney
Office of Petitions
United States Patent and Trademark Office

BRINKS HOFER GILSON & LIONE
P.O. BOX 10395
CHICAGO, IL 60610
USA

UNITED STATES PATENT AND TRADEMARK OFFICE

Commissioner for Patents
United States Patent and Trademark Office
P.O. Box 1450
Alexandria, VA 22313-1450
www.uspto.gov

BRINKS HOFER GILSON & LIONE
P.O. BOX 10395
CHICAGO IL 60610

MAILED

FEB 23 2009

OFFICE OF PETITIONS

In re Patent No. 7,373,487	:	
Kato et al.	:	DECISION ON REQUEST
Issue Date: May 13, 2008	:	FOR RECONSIDERATION OF
Application No. 10/408,749	:	PATENT TERM ADJUSTMENT
Filed: April 7, 2003	:	
Attorney Docket No. 9281-4547	:	

This is a decision on the "REQUEST FOR RECONSIDERATION OF PATENT TERM ADJUSTMENT" filed July 18, 2008 (certificate of mailing dated Monday, July 14, 2008). Patentee requests that the Patent Term Adjustment for the above-identified patent be set at 1351 days.

The request for reconsideration of the patent term adjustment indicated in the patent is **DISMISSED**.

Patentee is given **TWO (2) MONTHS** from the mailing date of this decision to respond. No extensions of time will be granted under § 1.136.

On May 13, 2008, the above-identified application matured into U.S. Patent No. 7,373,487. The instant request for reconsideration was timely filed on July 18, 2008 (certificate of mailing dated Monday, July 14, 2008). The patent issued with a revised Patent Term Adjustment of 1101 days.

Patentees request that the revised Patent Term Adjustment be corrected from 1101 days to 1351 days. Specifically, patentees assert that a period of adjustment of 250 days should be entered for the Office taking in excess of three (3) years to issue the patent.

In the present request, patentees state:

> The present application was filed on April 7, 2003. The 3 year date specified in 37 C.F.R. § 1.703(b) is April 7, 2006. The PTO issued a patent for the present application on May 13, 2008. The difference between the 3 year date and the date of issue of the patent is 250 days.

Request dated 07/18/08, p. 2.

However, the Office notes that the instant patent issued 3 years and 767 days after its filing date (not 3 years and 250 days as indicated by patentees). Nonetheless, any days of delay for Office issuance of the patent more than 3 years after the filing date of the application, which overlap, with the days of patent term adjustment accorded prior to the issuance of the patent will not result in any additional patent term adjustment. Further, in considering the overlap, the entire period during which the application was pending (except for periods excluded under 35 U.S.C. 154(b)(1)(B)(i)-(iii), and not just the period beginning three years after the actual filing date of the application, is the period of delay under 35 U.S.C. 154(b)(1)(B) in determining whether periods of delay overlap under 35 U.S.C. 154(b)(2)(A). See 35 U.S.C. 154(b)(1)(B); 35 U.S.C. 154(b)(2)(A); and 37 CFR 1.703(f).

In this instance, the period of delay of 767 days attributable to the delay in the issuance of the patent overlaps with the adjustment of 1186 days attributable to grounds specified in § 1.702(a)(1). Thus, no additional period of adjustment beyond 1186 days was entered. Accordingly, the period of 1186 days for Office delay is correct.

In view thereof, the patent term adjustment of **1101 days** indicated in the patent is correct.

The Office will charge the Deposit Account for the $200.00 fee set forth in 37 CFR 1.18(e) as authorized.

Telephone inquiries specific to this matter should be directed to Christina Tartera Donnell, Senior Petitions Attorney, at (571) 272-3211.

Nancy Johnson
Senior Petitions Attorney
Office of Petitions

UNITED STATES PATENT AND TRADEMARK OFFICE

COMMISSIONER FOR PATENTS
UNITED STATES PATENT AND TRADEMARK OFFICE
P.O. BOX 1450
ALEXANDRIA, VA 22313-1450
www.uspto.gov

Paper No. 6

THE LAW OFFICES OF
WILLIAM W. COCHRAN, LLC
SUITE 230
3555 STANFORD ROAD
FORT COLLINS, CO 80525

COPY MAILED
JAN 30 2004
OFFICE OF PETITIONS

In re Application of:
James J. Graham and
Dallen Campbell
Application No. 10/408,757
Filed: April 3, 2003
Title of Invention:
WEB IMAGING SERVING TECHNOLOGY

ON PETITION

This is in response to a Request for Reconsideration of Petition under 37 CFR 1.47(b), filed December 24, 2003, and supplemented via facsimile on January 14, 2004, to allow a person to whom the invention has been assigned, or who otherwise shows sufficient proprietary interest in an application, to proceed with the application.

The petition is **granted**.

The above-identified application and papers have been reviewed and found in compliance with 37 CFR 1.47(b). This application is hereby accorded Rule 1.47(b) status.

Petitioner has demonstrated that non-signing inventor James J. Graham, refuses to join the application after having been presented with the application for signature, and that inventor Dallen Campbell cannot be found or reached after diligent effort.

As provided in Rule 1.47(b), this Office will forward notice of this application's filing to the non-signing inventors at the addresses given in the petition. Notice of the filing of this application will also be published in the Official Gazette.

The application file is being forwarded to the Office of Initial Patent Examination for continued processing.

Telephone inquiries concerning this matter should be directed to the undersigned at (703) 305-0014.

Derek L. Woods
Petitions Attorney
Office of Petitions

UNITED STATES PATENT AND TRADEMARK OFFICE

Commissioner for Patents
United States Patent and Trademark Office
P.O. Box 1450
Alexandria, VA 22313-1450
www.uspto.gov

BANNER & WITCOFF, LTD.
1100 13th STREET, N.W.
SUITE 1200
WASHINGTON, DC 20005-4051

COPY MAILED

APR 29 2008

OFFICE OF PETITIONS

In re Application of :
Chi V. DANG, et al. :
Application No. 10/408,766 :
Filed: April 08, 2003 :
Attorney Docket No. **001107.00329** :

DECISION ON PETITION

This is a decision on the petition under the unintentional provisions of 37 CFR 1.137(b), filed February 11, 2008, to revive the above-identified application.

The petition is **DISMISSED**.

Any request for reconsideration of this decision must be submitted within TWO (2) MONTHS from the mail date of this decision. Extensions of time under 37 CFR 1.136(a) are permitted. The reconsideration request should include a cover letter entitled "Renewed Petition under 37 CFR 1.137(b)." This is **not** a final agency action within the meaning of 5 U.S.C. § 704.

The application became abandoned for failure to reply in a timely manner to the non-final Office action mailed, August 08, 2007, which set a shortened statutory period for reply of three (3) months. No extensions of time under the provisions of 37 CFR 1.136(a) were obtained. Accordingly, the application became abandoned on November 09, 2007.

A grantable petition under 37 CFR 1.137(b) must be accompanied by: (1) the required reply, unless previously filed; (2) the petition fee as set forth in 37 CFR 1.17(m); (3) a statement that the entire delay in filing the required reply from the due date for the reply until the filing of a grantable petition pursuant to 37 CFR 1.137(b) was unintentional; and (4) any terminal disclaimer (and fee as set forth in 37 CFR 1.20(d)) required by 37 CFR 1.137(d). Where there is a question as to whether either the abandonment or the delay in filing a petition under 37 CFR 1.137 was unintentional, the Director may require additional information. See MPEP 711.03(c)(II)(C) and (D). The instant petition lacks item (1).

Petitioner failed to provide the required reply to the Office action of August 08, 2007.

An extension of time under 37 CFR 1.136 must be filed prior to the expiration of the maximum extendable period for reply. *See* In re Application of S., 8 USPQ2d 1630, 1631 (Comm'r Pats. 1988). Since the $525.00 extension of time fee submitted with the petition on February 11, 2008 was subsequent to the maximum extendable period for reply, this fee is unnecessary and will be credited to petitioner's deposit account.

Further correspondence with respect to this matter should be addressed as follows:

By Mail: Mail Stop PETITION
Commissioner for Patents
P. O. Box 1450
Alexandria, VA 22313-1450

By hand: U. S. Patent and Trademark Office
Customer Service Window, Mail Stop Petitions
Randolph Building
401 Dulany Street
Alexandria, VA 22314

The centralized facsimile number is **(571) 273-8300.**

Telephone inquiries concerning this decision should be directed to the Michelle R. Eason at (571) 272-4231.

Michelle R. Eason
Paralegal Specialist
Office of Petitions

UNITED STATES PATENT AND TRADEMARK OFFICE

Commissioner for Patents
United States Patent and Trademark Office
P.O. Box 1450
Alexandria, VA 22313-1450
www.uspto.gov

BANNER & WITCOFF, LTD.
1100 13th STREET, N.W.
SUITE 1200
WASHINGTON, DC 20005-4051

COPY MAILED

JUN 16 2008

OFFICE OF PETITIONS

In re Application of	:	
Chi V. DANG et al.	:	
Application No. 10/408,766	:	ON PETITION
Filed: April 08, 2003	:	
Attorney Docket No. 001107.00329	:	

This is a decision on the renewed petition under the unintentional provisions of 37 CFR 1.137(b), filed May 08, 2008, to revive the above-identified application.

The petition is **GRANTED**.

The application became abandoned for failure to reply in a timely manner to the non-final Office action mailed, August 08, 2007, which set a shortened statutory period for reply of three (3) months. No extensions of time under the provisions of 37 CFR 1.136(a) were obtained. Accordingly, the application became abandoned on November 09, 2007.

The petition satisfies the requirements of 37 CFR 1.137(b) in that petitioner has supplied (1) the reply in the form of a continuing application under 37 CFR 1.53(b); (2) the petition fee of $1,540.00; and (3) a proper statement of unintentional delay.

This application is being revived solely for purposes of continuity. As continuity has been established by this decision, the application is again abandoned in favor of continuing application No. 12/028,441, filed February 08, 2008.

Telephone inquiries concerning this decision should be directed to Michelle R. Eason at (571) 272-4231.

The application is referred to Technology Center A.U. 1635

Michelle R. Eason

Michelle R. Eason
Paralegal Specialist
Office of Petitions

PTO/SB/66 (03-09)
Approved for use through 03/31/2012. OMB 0651-0016
U.S. Patent and Trademark Office: U.S. DEPARTMENT OF COMMERCE
Under the Paperwork Reduction Act of 1995, no persons are required to respond to a collection of information unless it displays valid OMB control number.

PETITION TO ACCEPT UNINTENTIONALLY DELAYED PAYMENT OF MAINTENANCE FEE IN AN EXPIRED PATENT (37 CFR 1.378(c))

Patent Number	Issue Date (YYYY-MM-DD)	Application Number	Filing Date (YYYY-MM-DD)	Docket Number (if applicable)
6,916,821	2005-07-12	10/408,771	2003-04-04	3972.1000-004

CAUTION: Maintenance fee (and surcharge, if any) payment must correctly identify: (1) the patent number and (2) the application number of the actual U.S. application leading to issuance of that patent to ensure the fee(s) is/are associated with the correct patent. 37 CFR 1.366(c) and (d).

SMALL ENTITY

☐ Patentee claims, or has previously claimed, small entity status. See 37 CFR 1.27.

LOSS OF ENTITLEMENT TO SMALL ENTITY STATUS

☐ Patentee is no longer entitled to small entity status. See 37 CFR 1.27(g)

NOT Small Entity			Small Entity		
	Fee	Code		Fee	Code
◉	3 ½ year	(1551)	○	3 ½ year	(2551)
○	7 ½ year	(1552)	○	7 ½ year	(2552)
○	11 ½ year	(1553)	○	11 ½ year	(2553)

SURCHARGE

The surcharge required by 37 CFR 1.20(i)(2) (Fee Code 1558) must be paid as a condition of accepting unintentionally delayed payment of the maintenance fee.

MAINTENANCE FEE (37 CFR 1.20(e)-(g))

The appropriate maintenance fee must be submitted with this petition.

STATEMENT

THE UNDERSIGNED CERTIFIES THAT THE DELAY IN PAYMENT OF THE MAINTENANCE FEE TO THIS PATENT WAS UNINTENTIONAL

PETITIONER(S) REQUEST THAT THE DELAYED PAYMENT OF THE MAINTENANCE FEE BE ACCEPTED AND THE PATENT REINSTATED

THIS PORTION MUST BE COMPLETED BY THE SIGNATORY OR SIGNATORIES

37 CFR 1.378(d) states: "Any petition under this section must be signed by an attorney or agent registered to practice before the Patent and Trademark Office, or by the patentee, the assignee, or other party in interest."

I certify, in accordance with 37 CFR 1.4(d)(4) that I am

◉ An attorney or agent registered to practice before the Patent and Trademark Office

○ A sole patentee

○ A joint patentee; I certify that I am authorized to sign this submission on behalf of all the other patentees.

○ A joint patentee; all of whom are signing this e-petition

○ The assignee of record of the entire interest

Patent Practitioner			
A signature of the applicant or representative is required in accordance with 37 CFR 1.33 and 10.18. Please see 37 CFR 1.4(d) for the form of the signature			
Signature	/Mary K. Murray, Reg. No. 47813/	Date (YYYY-MM-DD)	2009-09-03
Name	Mary K. Murray	Registration Number	47813

This collection of information is required by 37 CFR 1.378(c). The information is required to obtain or retain a benefit by the public which is to file (and by the USPTO to process) an application. Confidentiality is governed by 35 U.S.C. 122 and 37 CFR 1.11 and 1.14. This collection is estimated to take 1 hour to complete, including gathering, preparing, and submitting the completed application form to the USPTO. Time will vary depending upon the individual case. Any comments on the amount of time you require to complete this form and/ or suggestions for reducing this burden, should be sent to the Chief Information Officer, U.S. Patent and Trademark Office, U.S. Department of Commerce, P.O. Box 1450, Alexandria, VA 22313-1450. DO NOT SEND FEES OR COMPLETED FORMS TO THIS ADDRESS. **This form can only be used when in conjunction with EFS-Web. If this form is mailed to the USPTO, it may cause delays in reinstating the patent.**

Privacy Act Statement

The Privacy Act of 1974 (P.L. 93-579) requires that you be given certain information in connection with your submission of the attached form related to a patent application or patent. Accordingly, pursuant to the requirements of the Act, please be advised that: (1) the general authority for the collection of this information is 35 U.S.C. 2(b)(2); (2) furnishing of the information solicited is voluntary; and (3) the principal purpose for which the information is used by the U.S. Patent and Trademark Office is to process and/or examine your submission related to a patent application or patent. If you do not furnish the requested information, the U.S. Patent and Trademark Office may not be able to process and/or examine your submission, which may result in termination of proceedings or abandonment of the application or expiration of the patent.

The information provided by you in this form will be subject to the following routine uses:

1. The information on this form will be treated confidentially to the extent allowed under the Freedom of Information Act (5 U.S.C. 552) and the Privacy Act (5 U.S.C. 552a). Records from this system of records may be disclosed to the Department of Justice to determine whether the Freedom of Information Act requires disclosure of these records.

2. A record from this system of records may be disclosed, as a routine use, in the course of presenting evidence to a court, magistrate, or administrative tribunal, including disclosures to opposing counsel in the course of settlement negotiations.

3. A record in this system of records may be disclosed, as a routine use, to a Member of Congress submitting a request involving an individual, to whom the record pertains, when the individual has requested assistance from the Member with respect to the subject matter of the record.

4. A record in this system of records may be disclosed, as a routine use, to a contractor of the Agency having need for the information in order to perform a contract. Recipients of information shall be required to comply with the requirements of the Privacy Act of 1974, as amended, pursuant to 5 U.S.C. 552a(m).

5. A record related to an International Application filed under the Patent Cooperation Treaty in this system of records may be disclosed, as a routine use, to the International Bureau of the World Intellectual Property Organization, pursuant to the Patent Cooperation Treaty.

6. A record in this system of records may be disclosed, as a routine use, to another federal agency for purposes of National Security review (35 U.S.C. 181) and for review pursuant to the Atomic Energy Act (42 U.S.C. 218(c)).

7. A record from this system of records may be disclosed, as a routine use, to the Administrator, General Services, or his/her designee, during an inspection of records conducted by GSA as part of that agency's responsibility to recommend improvements in records management practices and programs, under authority of 44 U.S.C. 2904 and 2906. Such disclosure shall be made in accordance with the GSA regulations governing inspection of records for this purpose, and any other relevant (i.e., GSA or Commerce) directive. Such disclosure shall not be used to make determinations about individuals.

8. A record from this system of records may be disclosed, as a routine use, to the public after either publication of the application pursuant to 35 U.S.C. 122(b) or issuance of a patent pursuant to 35 U.S.C. 151. Further, a record may be disclosed, subject to the limitations of 37 CFR 1.14, as a routine use, to the public if the record was filed in an application which became abandoned or in which the proceedings were terminated and which application is referenced by either a published application, an application open to public inspections or an issued patent.

9. A record from this system of records may be disclosed, as a routine use, to a Federal, State, or local law enforcement agency, if the USPTO becomes aware of a violation or potential violation of law or regulation.

UNITED STATES PATENT AND TRADEMARK OFFICE

Commissioner for Patents
United States Patent and Trademark Office
P.O. Box 1450
Alexandria, VA 22313-1450
www.uspto.gov

In re Patent No. 6916821
Issue Date: July 12,2005
Application No. 10408771
Filed: April 4,2003
Attorney Docket No. 3499.1003-004

:DECISION GRANTING PETITION
:UNDER 37 CFR 1.378(c)

This is a decision on the electronic petition, filed September 3,2009 ,under 37 CFR 1.378(c) to accept the unintentionally delayed payment of the 3.5 year maintenance fee for the above-identified patent.

The petition is **GRANTED**.

The maintenance fee is accepted, and the above-identified patent reinstated as of September 3,2009 . This decision also constitutes notice that the fee has been accepted. An electronic copy of the petition and this decision has been created as an entry in the Image File Wrapper. Nevertheless, petitioner should print and retain an independent copy.

Telephone inquiries related to this electronic decision should be directed to the Electronic Business Center at 1-866-217-9197.

UNITED STATES PATENT AND TRADEMARK OFFICE

COMMISSIONER FOR PATENTS
UNITED STATES PATENT AND TRADEMARK OFFICE
P.O. BOX 1450
ALEXANDRIA, VA 22313-1450
www.uspto.gov

Paper No. 6

FENWICK & WEST LLP
SILICON VALLEY CENTER
801 CALIFORNIA STREET
MOUNTAIN VIEW CA 94041

COPY MAILED

OCT 1 0 2003

OFFICE OF PETITIONS

In re Application of
Cleron, Fisher & Bruck
Application No. 10/408,789
Filed: April 3, 2003
Attorney Docket No. 18602-07124
For: EXTENSIBLE, REPLACEABLE NETWORK COMPONENT SYSTEM

DECISION ACCORDING STATUS UNDER 37 CFR 1.47(a)

This is in response to the petition under 37 CFR 1.47(a), filed September 9, 2003 (certificate of mailing date September 5, 2003).

The petition is granted.

Petitioners have shown that the non-signing inventor, Stephen Fisher, has refused to join in the filing of the above-identified application after having been presented with the application papers. Specifically, the declaration of facts of Patricia A. Floris, employee of the firm handling the prosecution of this application, establishes that the inventor received the application papers, including the specification, claims and drawings, but refused to sign the declaration in a voicemail message he left for Ms. Floris on August 8, 2003. Petitioners have submitted a declaration in compliance with 37 CFR 1.63 and 1.64.

This application and papers have been reviewed and found in compliance with 37 CFR 1.47(a). This application is hereby accorded Rule 1.47(a) status.

As provided in Rule 1.47(c), this Office will forward notice of this application's filing to the non-signing inventor at the address given in the petition. Notice of the filing of this application will also be published in the Official Gazette.

After this decision is mailed, the above-identified application will be forwarded to the Office of Initial Patent Examination for further processing.

Telephone inquiries should be directed to the undersigned at (703) 308-6712.

E. Shirene Willis

E. Shirene Willis
Senior Petitions Attorney
Office of Petitions

UNITED STATES PATENT AND TRADEMARK OFFICE

COMMISSIONER FOR PATENTS
UNITED STATES PATENT AND TRADEMARK OFFICE
P.O. BOX 1450
ALEXANDRIA, VA 22313-1450
www.uspto.gov

STEPHEN FISHER
8 LYNN COURT
MORRISTOWN NJ 07960-5960

In re Application of
Cleron, Fisher & Bruck
Application No. 10/408,789
Filed: April 3, 2003
Attorney Docket No. 18602-07124
For: EXTENSIBLE, REPLACEABLE
NETWORK COMPONENT SYSTEM

COPY MAILED

OCT 1 0 2003

LETTER

OFFICE OF PETITIONS

Dear Mr. Fisher:

You are named as a joint inventor in the above identified United States patent application, filed under the provisions of 35 U.S.C. 116 (United States Code), and 37 CFR 1.47(a), Rules of Practice in Patent Cases. Should a patent be granted on the application you will be designated therein as a joint inventor.

As a named inventor you are entitled to inspect any paper in the file wrapper of the application, order copies of all or any part thereof (at a prepaid cost per 37 CFR 1.19) or make your position of record in the application. Alternatively, you may arrange to do any of the preceding through a registered patent attorney or agent presenting written authorization from you. If you care to join the application, counsel of record (see below) would presumably assist you. Joining in the application would entail the filing of an appropriate oath or declaration by you pursuant to 37 CFR 1.63.

Requests for information regarding your application should be directed to the File Information Unit at (703)308-2733. Information regarding how to pay for and order a copy of the application, or a specific paper in the application, should be directed to Certification Division at (703)308-9726 or 1(800)972-6382 (outside the Washington D.C. area).

Telephone inquiries regarding this communication should be directed to the undersigned at (703) 308-6712.

E. Shirene Willis

E. Shirene Willis
Senior Petitions Attorney
Office of Petitions

ATTORNEY OF RECORD: FENWICK & WEST LLP
SILICON VALLEY CENTER
801 CALIFORNIA STREET
MOUNTAIN VIEW CA 94041

UNITED STATES PATENT AND TRADEMARK OFFICE

Commissioner for Patents
United States Patent and Trademark Office
P.O. Box 1450
Alexandria, VA 22313-1450
www.uspto.gov

CREATIVE COMPOUNDS, LLC
P.O. BOX 4011
SCOTT CITY MO 63780

COPY MAILED

APR 15 2008

OFFICE OF PETITIONS

In re Application of :
Derek Wayne Cornelius, et al. :
Application No. 10/408,797 : DECISION ON PETITION
Filed: April 8, 2003 :
Attorney Docket No. :

This is a decision on the petition under the unintentional provisions of 37 CFR 1.137(b), filed October 24, 2007, to revive the above-identified application.

The petition is **DISMISSED**.

The application became abandoned for failure to reply in a timely manner to the non-final Office action mailed, June 29, 2005, which set a shortened statutory period for reply of three (3) months. No extensions of time under the provisions of 37 CFR 1.136(a) were obtained. Accordingly, the application became abandoned on September 30, 2005.

A grantable petition under 37 CFR 1.137(b) must be accompanied by: (1) the required reply, unless previously filed; (2) the petition fee as set forth in 37 CFR 1.17(m); (3) a statement that the entire delay in filing the required reply from the due date for the reply until the filing of a grantable petition pursuant to 37 CFR 1.137(b) was unintentional; and (4) any terminal disclaimer (and fee as set forth in 37 CFR 1.20(d)) required by 37 CFR 1.137(d). Where there is a question as to whether either the abandonment or the delay in filing a petition under 37 CFR 1.137 was unintentional, the Director may require additional information. *See* MPEP 711.03(c)(II)(C) and (D). The instant petition lacks item (1) and (3).

With respect to item (1): a petition cannot be granted where there is an outstanding requirement. In the instant case, there

was no response to the non-final Office action mailed June 29, 2007.

With respect to item (3): there are three periods to be considered during the evaluation of a petition under 37 CFR 1.137(b):

(1) the delay in reply that originally resulted in the abandonment;

(2) the delay in filing an initial petition pursuant to 37 CFR 1.137(b) to revive the application; and

(3) the delay in filing a grantable petition pursuant to 37 CFR 1.137(b) to revive the application.

Currently, the delay has not been shown to the satisfaction of the Director to be unintentional for periods (1) and (2).

As to Period (1):

The patent statute at 35 U.S.C. § 41(a) (7) authorizes the Director to revive an "unintentionally abandoned application." The legislative history of Public Law 97-247 reveals that the purpose of 35 U.S.C. § 41(a)(7) is to permit the Office to have more discretion than in 35 U.S.C. §§ 133 or 151 to revive abandoned applications in appropriate circumstances, but places a limit on this discretion, stating that "[u]nder this section a petition accompanied by either a fee of $500 or a fee of $50 **would not be granted where the abandonment** or the failure to pay the fee for issuing the patent **was intentional** as opposed to being unintentional or unavoidable." [emphasis added]. See H.R. Rep. No. 542, 97th Cong., 2d Sess. 6-7 (1982), *reprinted in* 1982 U.S.C.C.A.N. 770-71. The revival of an intentionally abandoned application is antithetical to the meaning and intent of the statute and regulation.

35 U.S.C. § 41(a)(7) authorizes the Director to accept a petition "for the revival of an unintentionally abandoned application for

a patent." As amended December 1, 1997, 37 CFR 1.137(b)(3) provides that a petition under 37 CFR 1.137(b) must be accompanied by a statement that the delay was unintentional, but provides that "[t]he Commissioner may require additional information where there is a question whether the delay was unintentional." Where, as here, there is a question whether the initial delay was unintentional, the petitioner must meet the

burden of establishing that the delay was unintentional within the meaning of 35 U.S.C. § 41(a)(7) and 37 CFR 1.137(b). *See* In re Application of G, 11 USPQ2d 1378, 1380 (Comm'r Pats. 1989); 37 CFR 1.137(b). Here, in view of the inordinate delay (almost 2 ½ years) in resuming prosecution, there is a question whether the entire delay was unintentional. Petitioner should note that the issue is not whether some of the delay was unintentional by any party; rather, the issue is whether the entire delay has been shown to the satisfaction of the Director to be unintentional.

The question under 37 CFR 1.137(b) for period (1) is whether the delay on the part of the party having the right or authority to reply to avoid abandonment (or not reply) was unintentional. Accordingly, any renewed petition must clearly identify the party having the right to reply to avoid abandonment on September 29, 2005. That party, in turn must explain what effort(s) was made to reply to the outstanding Office action and, further, why no reply was filed. If no effort was made to further reply, then that party must explain why the delay in this application does not result from a deliberate course of action (or inaction). Likewise, as Creative Compounds was responsible for the application at the time of abandonment, Creative Compounds should explain why this application became abandoned while it was under their control and what efforts they made to reply and with whom this matter was discussed outside of Creative Compounds' presence. Copies of any correspondence relating to the filing, or not to file a further reply to the outstanding Office action are required from responsible person(s), Creative Compounds and whoever else was involved with this application at the time of abandonment. Statements are required from any and all persons responsible for handling Creative Compounds affairs, and the responsible person(s) having firsthand knowledge of the circumstances surrounding the lack of a reply to the outstanding Office action. As the courts have made clear, it is pointless for the USPTO to revive a long abandoned application without an adequate showing that the delay did not result from a deliberate course of action. *See* Lawman Armor v. Simon, 2005 U.S. Dist. LEXIS 10843, 74 USPQ2d 1633 (DC EMich 2005); Field Hybrids, LLC v. Toyota Motor Corp., 2005 U.S. Dist. LEXIS 1159 (D. Minn Jan. 27, 2005); Lumenyte Int'l Corp. v. Cable Lite Corp., Nos. 96-1011, 96-1077, 1996 U.S. App. LEXIS 16400, 1996 WL 383927 (Fed. Cir. July 9, 1996) (unpublished) (patents held unenforceable due to a finding of inequitable conduct in submitting an inappropriate statement that the abandonment was unintentional).

As to Period (2):

Likewise, where the applicant deliberately chooses not to seek or persist in seeking the revival of an abandoned application, or

where the applicant deliberately chooses to delay seeking the revival of an abandoned application, the resulting delay in seeking revival of the abandoned application cannot be considered as "unintentional" within the meaning of 37 CFR 1.137(b). *See* MPEP 711.03(c).

The language of both 35 U.S.C. § 41(a)(7) and 37 CFR 1.137(b) are clear and unambiguous, and, furthermore, without qualification. That is, the delay in filing the reply during prosecution, as well as in filing the petition seeking revival, must have been, without qualification, "unintentional" for the reply to now be accepted on petition. The Office requires that the entire delay be at least unintentional as a prerequisite to revival of an abandoned application to prevent abuse and injury to the public. *See* H.R. Rep. No. 542, 97th Cong., 2d Sess. 7 (1982), reprinted in 1982 U.S.C.C.A.N. 771 ("[i]n order to prevent abuse and injury to the public the Commissioner . . . could require applicants to act promptly after becoming aware of the abandonment"). The December 1997 change to 37 CFR 1.137 did not create any new right to overcome an intentional delay in seeking revival, or in renewing an attempt at seeking revival, of an abandoned application. *See* Changes to Patent Practice and Procedure; Final Rule Notice, 62 Fed. Reg. 53131, 53160 (October 10, 1997), 1203 Off. Gaz. Pat. Office 63, 87 (October 21, 1997), which clearly stated that any protracted delay (here, over 2 ½ years) could trigger, as here, a request for additional information. As the courts have since made clear, a protracted delay in seeking revival, as here, requires a petitioner's detailed explanation seeking to excuse the delay as opposed to USPTO acceptance of a general allegation of unintentional delay. *See* Lawman Armor v. Simon, 2005 U.S. Dist. LEXIS 10843, 74 USPQ2d 1633, at 1637-8 (DC EMich 2005); Field Hybrids, LLC v. Toyota Motor Corp., 2005 U.S. Dist. LEXIS 1159 (D. Minn Jan. 27, 2005) at *21-*23. Statements are required from any and all persons handling Creative Compounds affairs and the responsible person(s) having firsthand knowledge of the circumstances surrounding the protracted delay, after the abandonment date, in seeking revival.

As noted in MPEP 711.03(c)(II), subsection D, in instances in which such petition was not filed within 1 year of the date of abandonment of the application, applicants should include:

> (A) the date that the applicant first became aware of the abandonment of the application; and
>
> (B) a showing as to how the delay in discovering the abandoned status of the application occurred despite the exercise of due care or diligence on the part of the applicant.

In either instance, applicant's failure to carry the burden of proof to establish that the "entire" delay was "unavoidable" or "unintentional" may lead to the denial of a petition under 37 CFR 1.137(b), regardless of the circumstances that originally resulted in the abandonment of the application. *See also* New York University v. Autodesk, 2007 U.S. DIST LEXIS, U.S.District LEXIS 50832, *10 -*12 (S.D.N.Y. 2007)(protracted delay in seeking revival undercuts assertion of unintentional delay).

There is no indication that the person signing the instant petition was ever given a power of attorney or authorization of agent to prosecute the above-identified application. In accordance with 37 CFR 1.34(a), the signature appearing on the petition shall constitute a representation to the United States Patent and Trademark Office that he/she is authorized to represent the particular party in whose behalf he/she acts. However, if petitioner desires to receive future correspondence regarding this application, the appropriate power of attorney or authorization of agent must be submitted. A courtesy copy of this decision is being mailed to petitioner. Nevertheless, all future correspondence regarding this application file will be directed solely to the address of record until otherwise instructed.

Any request for reconsideration of this decision must be submitted within **TWO (2) MONTHS** from the mail date of this decision. Extensions of time under 37 CFR 1.136(a) are permitted. The reconsideration request should include a cover letter entitled "Renewed Petition under 37 CFR 1.137(b)." This is not a final agency action within the meaning of 5 U.S.C. § 704.

Any renewed petition may be addressed as follows:

By Mail: Mail Stop PETITION
Commissioner for Patents
P. O. Box 1450
Alexandria, VA 22313-1450

By hand: U. S. Patent and Trademark Office
Customer Service Window, Mail Stop Petitions
Randolph Building
401 Dulany Street
Alexandria, VA 22314

The centralized facsimile number is **(571) 273-8300.**

Correspondence regarding this decision may also be filed through the electronic filing system of the USPTO.

To expedite consideration, petitioner may wish to contact the undersigned regarding the filing of the renewed petition under 37 CFR 1.137(b).

Telephone inquiries concerning this decision should be directed to the undersigned at (571) 272-1642.

April M. Wise
Petitions Examiner
Office of Petitions

Cc: MICHAEL KELLER
LOTT & FRIEDLAND
ONE EAST BROWARD BLVD.
SUITE 1609
FORT LAUDERDALE, FL 33301

UNITED STATES PATENT AND TRADEMARK OFFICE

Commissioner for Patents
United States Patent and Trademark Office
P.O. Box 1450
Alexandria, VA 22313-1450
www.uspto.gov

ROBERT A. KENT
HALLIBURTON ENERGY SERVICES
2600 SOUTH 2ND STREET
DUNCAN OK 73533

COPY MAILED

AUG 16 2006

OFFICE OF PETITIONS

ON PETITION

In re Application of :
Philip D. Nguyen et al. :
Application No. 10/408,800 :
Filed: April 7, 2003 :
Attorney Docket No. 2003-IP-009380U1 :

This is a decision on the petition filed June 30, 2006 under 37 CFR 1.137(b),[1] to revive the above-identified application.

The petition under 37 CFR 1.137 (b) is **GRANTED**.

This application became abandoned October 20, 2005 for failure to timely pay the issue fee on or before October 19, 2006. Accordingly, a Notice of Abandonment was mailed May 30, 2006.

The issue fee, publication fee and petition fee have all been applied. All other requirements of 37 CFR 1.137(b) having now been met, this application file is being forwarded to the Publishing Division to be processed into a patent.

Telephone inquiries concerning this matter may be directed to the undersigned Petitions Attorney at (571) 272-3212.

Patricia Faison-Ball
Senior Petitions Attorney
Office of Petitions

---

[1] Effective December 1, 1997, the provisions of 37 CFR 1.137(b) now provide that where the delay in reply was unintentional, a petition may be filed to revive an abandoned application or a lapsed patent pursuant to 37 CFR 1.137(b). A grantable petition filed under the provisions of 37 CFR 1.137(b) must be accompanied by:

(1) the required reply, unless previously filed. In a nonprovisional application abandoned for failure to prosecute, the required reply may be met by the filing of a continuing application. In a nonprovisional application filed on or after June 8, 1995, and abandoned for failure to prosecute, the required reply may also be met by the filing of a request for continued examination in compliance with § 1.114. In an application or patent, abandoned or lapsed for failure to pay the issue fee or any portion thereof, the required reply must be the payment of the issue fee or any outstanding balance thereof.

(2) the petition fee as set forth in 37 CFR 1.17(m);

(3) a statement that the entire delay in filing the required reply from the due date for the reply until the filing of a grantable petition pursuant to 37 CFR 1.137(b) was unintentional. The Commissioner may required additional information where there is a question whether the delay was unintentional; and

(4) any terminal disclaimer (and fee as set forth in 37 CFR 1.20(d)) required pursuant to 37 CFR 1.137(c)).

UNITED STATES PATENT AND TRADEMARK OFFICE

UNITED STATES DEPARTMENT OF COMMERCE
United States Patent and Trademark Office
Address: COMMISSIONER FOR PATENTS
P.O. Box 1450
Alexandria, Virginia 22313-1450
www.uspto.gov

IBM CORPORATION, T.J. WATSON RESEARCH CENTER
P.O. BOX 218
YORKTOWN HEIGHTS, NY 10598

Mail Date: 04/20/2010

Applicant	: Laurent L. Balmelli	: DECISION ON REQUEST FOR
Patent Number	: 7623992	: RECALCULATION of PATENT
Issue Date	: 11/24/2009	: TERM ADJUSTMENT IN VIEW
Appliction No	: 10/408,813	: OF WYETH AND NOTICE OF INTENT TO
Filed	: 03/28/2003	: ISSUE CERTIFICATE OF CORRECTION
		:

The Request for Recalculation is **GRANTED** to the extent indicated.

The patent term adjustment has been determined to be **1172** days. The USPTO will *sua sponte* issue a certificate of correction reflecting the amount of PTA days determined by the recalculation.

Prior to the issuance of the certificate of correction, the USPTO will afford patentee an opportunity to be heard and request reconsideration. Accordingly, patentee has **one month or thirty (30) days**, whichever is longer, to file a request for reconsideration of this patent term adjustment calculation. See 35 U.S.C. 154(b)(3)(B)(ii) and 37 CFR 1.322(a)(4). No extensions of time will be granted under 37 CFR 1.136.

Patentee should use document code PET.OP if electronically filing a request for reconsideration of this patent term adjustment calculation. The patentee must also include the information required by 37 CFR 1.705(b)(2) and the fee required by 37 CFR 1.18(e). If patentee does not file a timely request for reconsideration of this patent term adjustment calculation including the information required by 37 CFR 1.705(b)(2) and the fee required by 37 CFR 1.18(e), the USPTO will issue a certificate of correction reflecting the PTA determination noted above.

Patentee should be aware that in order to preserve the right to review in the United States District Court for the District of Columbia of the USPTO patent term adjustment determination, patentee must ensure that he or she also take the steps required under 35 U.S.C. 154(b)(4)(A) in a timely manner. Nothing in the request for recalculation should be construed as providing an alternative time frame for commencing a civil action under 35 U.S.C. 154(b)(4)(A).

Any questions concerning this decision should be directed to the Office of Patent Legal Administration at 571-272-7702.

UNITED STATES PATENT AND TRADEMARK OFFICE

Commissioner for Patents
United States Patent and Trademark Office
P.O. Box 1450
Alexandria, VA 22313-1450
www.uspto.go

JOHN H. BECKER
15 B Bowens CT
Cartersville GA 30120

COPY MAILED
AUG 2 8 2006
OFFICE OF PETITIONS

In re Application of :
Becker et al. :
Application No. 10/408,815 : DECISION ON PETITION
Filed: April 7, 2003 :
Title of Invention: Tire Inflation System :

This is a decision on the petition under 37 CFR 1.137(b), filed July 11, 2006, to revive the above-identified application.

This above-identified application became abandoned for failure to timely file a reply to a non-final Office Action mailed July 7, 2004. The non-final Office Action set a three (3) month shortened statutory period for reply. A three month extension of time was obtained under the provisions of 37 CFR 1.136(a). Accordingly, this application became abandoned on January 8, 2005. A Notice of Abandonment was mailed on August 12, 2005.

The requirements for a grantable petition under 37 CFR §1.137(b) have been met. This petition is hereby **Granted**.

A power of attorney and change of correspondence address were submitted with the instant petition. The power of attorney will not be entered because it has not been executed by inventor John Charles Becker. Papers giving or revoking a power of attorney in an application generally require signature by all the applicants or owners of the application. See MPEP 402.10

This application is being forwarded to Technology Center 3600 for further processing.

Telephone inquiries concerning this matter should be directed to the undersigned at (571) 272-3215.

Charlema R. Grant

Charlema R. Grant
Petitions Attorney
Office of Petitions

cc: Christopher D. Linder
Thomas, Kayden, Horstemeyer & Risley, LLP
100 Galleria Parkway, N.W.
Suite 1750
Atlanta, Georgia 30339

UNITED STATES PATENT AND TRADEMARK OFFICE

Commissioner for Patents
United States Patent and Trademark Office
P.O. Box 1450
Alexandria, VA 22313-1450
www.uspto.gov

JOHN H. BECKER
322 NORTHPOINT PARKWAY,
SUITE J
ACWORTH , GA 30102

COPY MAILED

MAY 29 2008

OFFICE OF PETITIONS

In re Application of	:	
John Henry BECKER, et al	:	
Application No. 10/408,815	:	DECISION ON PETITION
Filed: April 7, 2003	:	
Attorney Docket No. 050221-1020	:	

This is a decision on the petition under the unintentional provisions of 37 CFR 1.137(b), filed December 10, 2007, to revive the above-identified application.

The petition is **GRANTED**.

The application became abandoned for failure to reply in a timely manner to the non-final Office action mailed, May 18, 2007, which set a shortened statutory period for reply of three (3) months. No extensions of time under the provisions of 37 CFR 1.136(a) were obtained. Accordingly, the application became abandoned on August 19, 2007.

The petition satisfies the requirements of 37 CFR 1.137(b) in that petitioner has supplied (1) the reply in the form of an amendment, (2) the petition fee of $770; and (3) an adequate statement of unintentional delay.

There is no indication that the petition is signed by a registered patent attorney or patent agent of record. However, in accordance with 37 CFR 1.34, the signature of Mr. Nguyen appearing on the correspondence shall constitute a representation to the United States Patent and Trademark Office that he is authorized to represent the particular party in whose behalf he acts. If, Mr. Nguyen desires to receive correspondence regarding this file, the appropriate power of attorney documents must be submitted. A courtesy copy of this decision is being mailed to Mr. Nguyen, the petitioner herein. However, until otherwise instructed, all future correspondence regarding this application file will be directed solely to the above-noted correspondence address of record.

Telephone inquiries concerning this decision should be directed to Diane Goodwyn at (571) 272-6735.

This application is being referred to Technology Center AU 3617 for appropriate action by the Examiner in the normal course of business on the reply received December 10, 2007.

April Wise
Petitions Examiner
Office of Petitions

cc: MINH N. NGUYEN
600 GALLERIA PARKWAY,
SUITE 1500
ATLANTA, GA 30339

UNITED STATES PATENT AND TRADEMARK OFFICE

Commissioner for Patents
United States Patent and Trademark Office
P.O. Box 1450
Alexandria, VA 22313-1450
www.uspto.gov

Scott A. Horstemeyer
THOMAS, KAYDEN, HORSTEMEYER &
RISKEY, L.L.P.
Suite 1500
600 Galleria Parkway
Atlanta, GA 30339

COPY MAILED
SEP 29 2008

In re Application of	:	
John Henry Becker, et al.	:	
Application No. 10/408,815	:	DECISION ON PETITION
Filed: April 7, 2003	:	TO WITHDRAW
Attorney Docket No. 050221-1020	:	FROM RECORD
	:	

This is a decision on the Request to Withdraw as attorney or agent of record under 37 C.F.R. § 1.36(b), filed September 18, 2008.

The request is **APPROVED**.

A grantable request to withdraw as attorney/agent of record must be signed by every attorney/agent seeking to withdraw or contain a clear indication that one attorney is signing on behalf of another/others. A request to withdraw will not be approved unless at least 30 (thirty) days would remain between the date of approval and the later of the expiration date of a time to file a response or the expiration date of the maximum time period which can be extended under 37 C.F.R. § 1.136(a).

The request was signed by Scott Horstemeyer on behalf of all attorneys of record. All attorneys/agents have been withdrawn. Applicant is reminded that there is no attorney of record at this time.

All future correspondence will be directed to the first named inventor John H. Becker at the address indicated below.

There is an outstanding Office action mailed September 8, 2008 that requires a reply from the applicant.

Telephone inquiries concerning this decision should be directed to Terri Williams at 571-272-2991.

Terri Williams
Petitions Examiner
Office of Petitions

cc: **John H. Becker**
15-B Bowens Court
Catersville, GA 30120

UNITED STATES PATENT AND TRADEMARK OFFICE

UNITED STATES DEPARTMENT OF COMMERCE
United States Patent and Trademark Office
Address: COMMISSIONER FOR PATENTS
P.O. Box 1450
Alexandria, Virginia 22313-1450
www.uspto.gov

APPLICATION NUMBER	FILING OR 371(C) DATE	FIRST NAMED APPLICANT	ATTY. DOCKET NO./TITLE
10/408,815	04/07/2003	John Henry Becker	050221-1020

CONFIRMATION NO. 3160

POWER OF ATTORNEY NOTICE

Scott A. Horstemeyer
THOMAS, KAYDEN, HORSTEMEYER & RISLEY, L.L.P.
Suite 1500
600 Galleria Parkway
Atlanta, GA 30339

OC000000032313966

Date Mailed: 09/29/2008

NOTICE REGARDING CHANGE OF POWER OF ATTORNEY

This is in response to the Power of Attorney filed 09/18/2008.

- The withdrawal as attorney in this application has been accepted. Future correspondence will be mailed to the new address of record. 37 CFR 1.33.

/tswilliams/

Office of Data Management, Application Assistance Unit (571) 272-4000, or (571) 272-4200, or 1-888-786-0101

UNITED STATES PATENT AND TRADEMARK OFFICE

Commissioner for Patents
United States Patent and Trademark Office
P.O. Box 1450
Alexandria, VA 22313-1450
www.uspto.gov

WORKMAN, NYDEGGER & SEELEY
ATTORNEY AT LAW
1000 EAGLE GATE TOWER
60 EAST SOUTH TEMPLE
SALT LAKE CITY, UT 84111

COPY MAILED

JUL 0 8 2005

OFFICE OF PETITIONS

In re Application of :
Wilbur, et al. :
Application No. 10/408,832 :
Filed: March 28, 2003 :
Attorney Docket No. 15536.18 :

ON PETITION

This is a decision on the petition under 37 CFR 1.10(c), filed March 18, 2004, requesting that the above-identified application be accorded a filing date of March 28, 2003, rather than the presently accorded filing date of March 31, 2003.

Petitioners allege that the application was deposited in Express Mail service on March 28, 2003. In support, the petition is accompanied by a copy of Express Mail Receipt No. EL906906747US (the same Express Mail number found on the original application papers located in the official file) showing a "date in" of March 28, 2003.

In view of the above, the petition is **GRANTED**.

Accordingly, the application is entitled to a filing date of March 28, 2003.

The application is being returned to the Office of Initial Patent Examination for processing with a filing date of March 28, 2003, and issuance of a corrected filing receipt. Thereafter, the application will be forwarded to Technology Center 2800 for further examination in due course.

Telephone inquiries concerning this matter may be directed to the undersigned at (571) 272-3228.

Edward J. Tannouse
Petitions Attorney
Office of Petitions/Patent
United States Patent and Trademark Office

UNITED STATES PATENT AND TRADEMARK OFFICE

COMMISSIONER FOR PATENTS
UNITED STATES PATENT AND TRADEMARK OFFICE
P.O. BOX 1450
ALEXANDRIA, VA 22313-1450
www.uspto.gov

ALSTON & BIRD, LLP
BANK OF AMERICA PLAZA
101 SOUTH TRYON STREET, SUITE 4000
CHARLOTTE, NC 28280-4000

COPY MAILED

DEC 1 1 2003

OFFICE OF PETITIONS

In re Application of	:	
Xiaoming Shen	:	DECISION GRANTING
Application No. 10/408,834	:	PETITION
Filed: April 7, 2003	:	
Attorney Docket No. 034848/261744	:	

This is a decision on the petition under 37 CFR 1.10(d), filed October 29, 2003, requesting that the above-identified application be accorded a filing date of April 7, 2003, rather than the presently accorded filing date of April 8, 2003.

The petition is **GRANTED**.

Applicants request the earlier filing date on the basis that the application was purportedly deposited in Express Mail service (Express Mail mailing label #EV185284881US) on April 7, 2003, pursuant to the requirements of 37 CFR 1.10. However, the Express Mail mailing label identified in the original application papers indicates a "date-in" of April 9, 2003 (though the application was actually received by the PTO on April 8, 2003). Applicants allege that the date of mailing indicated by the Express Mail mailing label is a U.S. Postal Service (USPS) error and the correct date of mailing is April 7, 2003.

In support, the petition is accompanied by a copy of the Express Mail mailing label indicates a "date-in" of April 9, 2003, but has a USPS mail stamp of April 7, 2003.

The USPS mail stamp indicates Express Mail Package #EV185284881US was actually deposited with the USPS on April 7, 2003.

In view of the evidence present in the file, it is concluded that the correct date of deposit in Express Mail service is April 7, 2003.

Accordingly, the application is entitled to a filing date of April 7, 2003.

The $130.00 petition fee, submitted October 29, 2003, will be refunded to deposit account no. 16-0605.

The application is being forwarded to the Office of Initial Patent Examination for issuance of a corrected filing receipt with a filing date of April 7, 2003.

Telephone inquiries concerning this matter may be directed to the undersigned at (703) 306-9200.

Edward J. Tannouse
Petitions Attorney
Office of Petitions
United States Patent and Trademark Office

UNITED STATES PATENT AND TRADEMARK OFFICE

COMMISSIONER FOR PATENTS
UNITED STATES PATENT AND TRADEMARK OFFICE
P.O. BOX 1450
ALEXANDRIA, VA 22313-1450
WWW.USPTO.GOV

Paper No. 5

William H. Logsdon
WEBB ZIESENHEIM LOGSDON ORKIN & HANSON, P.C.
700 Koppers Building
436 Seventh Avenue
Pittsburgh PA 15219-1818

COPY MAILED

SEP 22 2003

OFFICE OF PETITIONS

In re Application of
Ross & Kendall
Application No. 10/408,846
Filed: April 7, 2003
Attorney Docket No. 227-021516
For: COMPUTER DESK

DECISION ACCORDING STATUS
UNDER 37 CFR 1.47(a)

This is in response to the petition under 37 CFR 1.47(a), filed July 28, 2003 (certificate of mailing date July 24, 2003).

The petition is granted.

Petitioner has shown that the non-signing inventor, Kim Kendall, has constructively refused to join in the filing of the above-identified application after having been presented with the application papers. Specifically, the statement of facts of Attorney William H. Logsdon establishes that the inventor was mailed and received the application papers, including the specification, claims and drawings, but failed to respond to the request that he sign the declaration. Petitioner has submitted a declaration in compliance with 37 CFR 1.63 and 1.64.

This application and papers have been reviewed and found in compliance with 37 CFR 1.47(a). This application is hereby accorded Rule 1.47(a) status.

As provided in Rule 1.47(c), this Office will forward notice of this application's filing to the non-signing inventor at the address given in the petition. Notice of the filing of this application will also be published in the Official Gazette.

After this decision is mailed, the above-identified application will be forwarded to Technology Center 3600 for examination in due course.

Telephone inquiries should be directed to the undersigned at (703) 308-6712.

E. Shirene Willis

E. Shirene Willis
Senior Petitions Attorney
Office of Petitions

UNITED STATES PATENT AND TRADEMARK OFFICE

COMMISSIONER FOR PATENTS
UNITED STATES PATENT AND TRADEMARK OFFICE
P.O. BOX 1450
ALEXANDRIA, VA 22313-1450
WWW.USPTO.GOV

KIM KENDALL
1224 BROOKLYN STREET
CANTON OH 44710

In re Application of
Ross & Kendall
Application No. 10/408,846
Filed: April 7, 2003
Attorney Docket No. 227-021516
For: COMPUTER DESK

LETTER

COPY MAILED
SEP 22 2003
OFFICE OF PETITIONS

Dear Mr. Kendall:

You are named as a joint inventor in the above identified United States patent application, filed under the provisions of 35 U.S.C. 116 (United States Code), and 37 CFR 1.47(a), Rules of Practice in Patent Cases. Should a patent be granted on the application you will be designated therein as a joint inventor.

As a named inventor you are entitled to inspect any paper in the file wrapper of the application, order copies of all or any part thereof (at a prepaid cost per 37 CFR 1.19) or make your position of record in the application. Alternatively, you may arrange to do any of the preceding through a registered patent attorney or agent presenting written authorization from you. If you care to join the application, counsel of record (see below) would presumably assist you. Joining in the application would entail the filing of an appropriate oath or declaration by you pursuant to 37 CFR 1.63.

Requests for information regarding your application should be directed to the File Information Unit at (703)308-2733. Information regarding how to pay for and order a copy of the application, or a specific paper in the application, should be directed to Certification Division at (703)308-9726 or 1(800)972-6382 (outside the Washington D.C. area).

Telephone inquiries regarding this communication should be directed to the undersigned at (703) 308-6712.

E. Shirene Willis

E. Shirene Willis
Senior Petitions Attorney
Office of Petitions

ATTORNEY OF RECORD: William H. Logsdon
WEBB ZIESENHEIM LOGSDON ORKIN & HANSON, P.C.
700 Koppers Building
436 Seventh Avenue
Pittsburgh PA 15219-1818

UNITED STATES PATENT AND TRADEMARK OFFICE

Commissioner for Patents
United States Patent and Trademark Office
P.O. Box 1450
Alexandria, VA 22313-1450
www.uspto.gov

KEITH D. HUTCHINSON
AGOURON PHARMACEUTICALS, INC./A PFIZER COMPANY
PATENT DEPARTMENT
10777 SCIENCE CENTER DRIVE
SAN DIEGO, CA 92121

COPY MAILED

MAR 1 8 2005

OFFICE OF PETITIONS

In re Patent No. 6,855,724	:	
Issue Date: February 15, 2005	:	
Application No. 10/408,856	:	ON PETITION
Filed: April 7, 2003	:	
Attorney Docket No. PCS22053A	:	

This is a decision on the petition filed March 3, 2005, which is being treated as a petition under 37 CFR 3.81(b)[1] to correct the assignee's name on the front page of the above-identified patent by way of a Certificate of Correction.

The petition is **granted.**

Telephone inquiries concerning this matter may be directed to the undersigned at (571) 272-3210. Any questions concerning the issuance of the Certificate of Correction should be directed to the Certificates of Correction Branch at (703) 305-8309.

The matter is being forwarded to the Certificates of Correction Branch for issuance of the requested Certificate of Correction.

Irvin Dingle
Petitions Examiner
Office of Petitions
Office of the Deputy Commissioner
for Patent Examination Policy

[1] See Official Gazette of June 22, 2004

UNITED STATES PATENT AND TRADEMARK OFFICE

Commissioner for Patents
United States Patent and Trademark Office
P.O. Box 1450
Alexandria, VA 22313-1450
www.uspto.gov

APR 29 2005

PATRICIA M. WILLIAMS
12550 TIMBERLINE DRIVE
GARFIELD AR 72732-9307

In re Application of Patricia M. Williams Serial No.: 10/408,859 Filed: April 8, 2003 Attorney Docket No.:	: PETITION TO MAKE SPECIAL

This is in response to the petition filed October 15, 2004, to make the above-identified application special under the provisions of 37 CFR 1.102(d).

Applicant has not satisfied the provisions set forth in M.P.E.P. 708.02, X. Therefor the petition is **DISMISSED**.

The section states as follows:

> Applicants who desire that an application relating to HIV/AIDS or cancer be made special should file a petition and the fee under 37 CFR 1.17(h) requesting the U.S. Patent and Trademark Office to make the application special. The petition for special status should be accompanied by a statement explaining how the invention contributes to the diagnosis, treatment or prevention of HIV/AIDS or cancer.

Applicant has failed to explain how the invention relates to cancer or HIV/AIDS treatment, as required, as it is not apparent how is does so from the claims.

Applicant may file a renewed petition satisfying the requirements noted above without further additional fees. Any renewed petition should be filed within TWO MONTHS of the mailing date of this decision.

Should there be any questions with regard to this letter please contact William R. Dixon, Jr. by letter addressed to the Director, Technology Center 1600, P.O. Box 1450, Alexandria, VA 22313-1450, or by telephone at 571-272-0519 or by facsimile transmission to the Office general facsimile number, 571-273-8300.

William R. Dixon, Jr.
Special Program Examiner
Technology Center 1600

UNITED STATES PATENT AND TRADEMARK OFFICE

Commissioner for Patents
United States Patent and Trademark Office
P.O. Box 1450
Alexandria, VA 22313-1450
www.uspto.gov

JUN - 2 2005

PATRICIA M. WILLIAMS
12550 TIMBERLINE DRIVE
GARFIELD AR 72732-9307

In re Application of Patricia M. Williams Serial No.: 10/408,859 Filed: April 8, 2003 Attorney Docket No.:	: PETITION TO MAKE SPECIAL

This is in response to the renewed petition filed May 6, 2005, to make the above-identified application special under the provisions of 37 CFR 1.102(d).

Applicant has now satisfied the provisions set forth in M.P.E.P. 708.02, X. Therefor the petition is **GRANTED**.

Should there be any questions with regard to this letter please contact William R. Dixon, Jr. by letter addressed to the Director, Technology Center 1600, P.O. Box 1450, Alexandria, VA 22313-1450, or by telephone at 571-272-0519 or by facsimile transmission to the Office general facsimile number, 571-273-8300.

William R. Dixon, Jr.
Special Program Examiner
Technology Center 1600

UNITED STATES PATENT AND TRADEMARK OFFICE

COMMISSIONER FOR PATENTS
UNITED STATES PATENT AND TRADEMARK OFFICE
P.O. BOX 1450
ALEXANDRIA, VA 22313-1450
www.uspto.gov

PATENT, COPYRIGHT & TRADEMARK LAW GROUP
4199 Kinross Lakes Parkway
Suite 275
RICHFIELD OH 44286

COPY MAILED

DEC 22 2008

OFFICE OF PETITIONS

In re Patent No. 6,746,068	:	
Issue Date: June 8, 2004	:	
Application No. 10/408,906	:	ON PETITION
Filed: April 9, 2003	:	
Attorney Docket No. 1184	:	

This is a decision on the petition under 37 CFR 1.378(c), filed September 19, 2008, to accept the unintentionally delayed payment of a maintenance fee for the above-identified patent.

The petition is **GRANTED**.

This patent expired June 8, 2008 for failure to pay the 3.5 year maintenance fee. Since this petition was submitted within twenty-four months after the six-month grace period provided in 37 CFR 1.362(e), the petition was timely filed under the provisions of 37 CFR 1.378(c).

The maintenance fee is hereby accepted and the above-identified patent is reinstated as of the mail date of this decision.

Telephone inquiries concerning this decision should be directed to the undersigned at (571) 272-3205.

Alesia M. Brown
Petitions Attorney
Office of Petitions

UNITED STATES PATENT AND TRADEMARK OFFICE

Commissioner for Patents
United States Patent and Trademark Office
P.O. Box 1450
Alexandria, VA 22313-1450
www.uspto.gov

FERNANDEZ & ASSOCIATES, LLP
PO BOX D
MENLO PARK, CA 94026-6402

COPY MAILED

OCT 28 2005

OFFICE OF PETITIONS

In re Application of	:	
Daniel Abrams et al	:	
Application No. 10/408,924	:	DECISION ON PETITION
Filed: April 6, 2003	:	TO WITHDRAW
Attorney Docket No. LUMI-P002	:	FROM RECORD
	:	

This is a decision on the Request to Withdraw as attorney or agent of record under 37 C.F.R. § 1.36(b), filed March 9, 2005.

The request is **NOT APPROVED**.

A grantable request to withdraw as attorney/agent of record must be signed by every attorney/agent seeking to withdraw or contain a clear indication that one attorney is signing on behalf of another/others. A request to withdraw will not be approved unless at least 30 (thirty) days would remain between the date of approval and the later of the expiration date of a time to file a response or the expiration date of the maximum time period which can be extended under 37 C.F.R. § 1.136(a).

The request cannot be approved because 37 CFR 10.40 states, "[a] practitioner shall not withdraw from employment in a proceeding before the Office without permission from the Office[.]" Additionally, 37 CFR 10.40 states, "i[f] paragraph (b) of this section is not applicable, a practitioner may not request permission to withdraw in matters pending before the Office unless such request or such withdrawal is because: [. . .]" Reasons a practitioner can permissively withdraw follow the later quotation.

Since the request for withdrawal as attorney or agent submitted on March 9, 2005 provides no reasons for withdrawal, the Office cannot at this time determine whether practitioner's request is one of the mandatory or permissive reasons enumerated in 37 CFR 10.40. Any subsequent requests must include reasons for withdrawal. Please note that there is a space provided for on PTO/SB/83 (Request for Withdrawal as Attorney or Agent) to supply practitioner's reasons.

All future communications from the Office will continue to be directed to the above-listed address until otherwise notified by applicant.

Telephone inquiries concerning this decision should be directed to Irvin Dingle at 571-272-3210.

Denise Pothier
Petitions Examiner
Office of Petitions

UNITED STATES PATENT AND TRADEMARK OFFICE

Commissioner for Patents
United States Patent and Trademark Office
P.O. Box 1450
Alexandria, VA 22313-1450
www.uspto.gov

FERNANDEZ & ASSOCIATES LLP
1047 EL CAMINO REAL
SUITE 201
MENLO PARK, CA 94025

COPY MAILED

JUN 12 2006

OFFICE OF PETITIONS

In re Application of	:	
ABRAMS et al.	:	
Application No. 10/408,924	:	DECISION ON PETITION
Filed: April 6, 2003	:	TO WITHDRAW
Attorney Docket No. LUMI-P002	:	FROM RECORD
	:	

This is a decision on the Request to Withdraw as attorney or agent of record under 37 C.F.R. § 1.36(b), filed November 18, 2005.

The request is **NOT APPROVED** as moot.

A review of the file record indicates that the power of attorney to Dennis Fernandez has been revoked by the assignee of the patent application on November 14, 2005. Accordingly, the request to withdraw under 37 C.F.R. § 1.36(b) is moot.

All future communications from the Office will continue to be directed to the below-listed address until otherwise notified by applicant.

Telephone inquires concerning this decision should be directed to the undersigned at 571-272-4787.

Denise Pothier
Petitions Examiner
Office of Petitions

cc: WILSON SONSINI GOODRICH & ROSATI
650 PAGE MILL ROAD
PALO ALTO CA 94304-1050

FERNANDEZ & ASSOCIATES
PO BOX D
MENLO PARK, CA 94026-6402

UNITED STATES PATENT AND TRADEMARK OFFICE

Commissioner for Patents
United States Patent and Trademark Office
P.O. Box 1450
Alexandria, VA 22313-1450
www.uspto.gov

MAILED

MAR 2 6 2010

OFFICE OF PETITIONS

WILSON, SONSINI, GOODRICH & ROSATI
650 PAGE MILL ROAD
PALO ALTO CA 94304-1050

In re Patent No. 7,480,889
Issued: January 20, 2009
Application No. 10/408,924
Filed: April 6, 2003
Dkt. No.: 29511-708.201

: DECISION ON APPLICATION FOR
: PATENT TERM ADJUSTMENT and
: NOTICE OF INTENT TO ISSUE
: CERTIFICATE OF CORRECTION
:

This is a decision on the petition filed on March 20, 2009, which is being treated as a petition under 37 CFR 1.705(d) requesting that the patent term adjustment indicated on the above-identified patent be corrected to indicate that the term of the above-identified patent is extended or adjusted by 163 days.

The petition to correct the patent term adjustment indicated on the above-identified patent is **GRANTED to the extent indicated herein**.

As the period from the filing date of the request for continued examination (RCE) to the issue date of the patent is not included in the "B" delay period, the over three year period begins on April 7, 2006 and ends on January 15, 2007, the day before the RCE was filed, and not January 16, 2007, the day of filing of the RCE as calculated by patentees. See, 35 U.S.C. 154(b)(1)(B)(i). Thus, the over 3 year period is 284 days not 285 days as argued by patentees.

Patentees acknowledge the "A" delay period of 275 days. Patentees acknowledge the reduction of 397 days for applicant delay. However, review of the record reveals that the adjustment is subject to further delay of eight days.

The adjustment is subject to an additional reduction of eight days in accordance with 37 CFR 1.704(c)(10) in connection with the IDS filed December 10, 2008. The reduction commenced December 10, 2008, the date that the IDS was filed, and ended December 17, 2008, the date that the Office mailed a response thereto.

Thus, the correct patent term adjustment is 154 days (275 + 284 – 405), not 163 days.

The Office will *sua sponte* issue a certificate of correction. Pursuant to 37 CFR 1.322, the Office will not issue a certificate of correction without first providing assignee or patentee an opportunity to be heard. Accordingly, patentees are given **one (1) month or thirty (30) days**, whichever is longer, from the mail date of this decision to respond. No extensions of time will be granted under § 1.136. See, 37 CFR 1.323(a)(4).

The Office acknowledges the previous submission of the $200.00 fee set forth in 37 CFR 1.18(e). No additional fees are required.

The application is being forwarded to the Certificates of Corrections Branch for issuance of a certificate of correction. The Office will issue a certificate of correction indicating that the term of the above-identified patent is extended or adjusted by 154 days.

Telephone inquiries specific to this matter should be directed to the undersigned at (571) 272-3205.

/ALESIA M. BROWN/

Alesia M. Brown
Senior Petitions Attorney
Office of Petitions

Enclosure: Copy of DRAFT Certificate of Correction

UNITED STATES PATENT AND TRADEMARK OFFICE

CERTIFICATE OF CORRECTION

PATENT : 7,480,889 B2

DATED : **January 20, 2009** **DRAFT**

INVENTOR(S) : Abrams, et al.

It is certified that error appears in the above-identified patent and that said Letters Patent is hereby corrected as shown below:

On the cover page,

[*] Notice: Subject to any disclaimer, the term of this patent is extended or adjusted under 35 USC 154(b) by 0 days

Delete the phrase "by 0 days" and insert – by 154 days--

SPE RESPONSE FOR CERTIFICATE OF CORRECTION

Paper No.: _____

DATE : May 11, 2010

TO SPE OF : ART UNIT 2825 - SPE Jack Chiang.

SUBJECT : Request for Certificate of Correction for Appl. No.: 10/408,924 Patent No.: 7,480,889 B2

Please respond to this request for a certificate of correction within 7 days.

FOR IFW FILES:

Please review the requested changes/corrections as shown in the **COCIN** document(s) in the IFW application image. No new matter should be introduced, nor should the scope or meaning of the claims be changed.

Please complete the response (see below) and forward the completed response to scanning using document code **COCX**.

FOR PAPER FILES:

Please review the requested changes/corrections as shown in the attached certificate of correction. Please complete this form (see below) and forward it with the file to:

Certificates of Correction Branch (CofC)
Randolph Square Building
2800 South Randolph Street
Arlington, VA 22206

Antonio Johnson

Should the change to correct inventorship be approved?
See COCIN dated 01-27-2009 The applicant filed a petition to correct inventorship under 1.48 before patent was issued but was not acted on. See R48.REQ dated 05-18-2006

_____
Certificates of Correction Branch
(571)272-0483

Thank You For Your Assistance

The request for issuing the above-identified correction(s) is hereby:
Note your decision on the appropriate box.

X **Approved**	**All** changes apply.
❑ **Approved in Part**	Specify below which changes **do not** apply.
❑ **Denied**	State the reasons for denial below.

Comments: (1) Request for correction of inventorship under 37 CFR 1.48(a) filed 5/18/2006 has been granted. (2) Request for Certificate of Correction of the issued patent filed 1/27/2009 has been approved.

SPE RESPONSE FOR CERTIFICATE OF CORRECTION

/Jack Chiang/ SPE, Art Unit 2825

SPE Art Unit

UNITED STATES PATENT AND TRADEMARK OFFICE

Commissioner for Patents
United States Patent and Trademark Office
P.O. Box 1450
Alexandria, VA 22313-1450
www.uspto.gov

WILLSON, SONSINI, GOODRICH & ROSATI
650 PAGE MILL ROAD
PALO ALTO, CA 94304 - 1050

Appl No.: 10/408,924	:	
Applicant: Abrams et al.	:	**DECISION ON PETITION**
Filed: April 06, 2004	:	**UNDER** *37 C.F.R. 1.48(a)*
For: Optimized Photomasks for Photolithograph	:	

This is a decision on the applicant's "Request under 37 CFR 1.48(a) to Correct Inventorship" filed May 18, 2006. The applicant requests to add inventor Stanley Osher as a joint inventor for the above-captioned patent application.

The petition is **GRANTED**.

Any petition for correction of inventorship filed under 37 CFR 1.48(a) must also include:

(1) A request to correct the inventorship that sets forth the desired inventorship change;

(2) A statement from each person being added as an inventor and from each person being deleted as an inventor that the error in inventorship occurred without deceptive intention on his or her part;

(3) An oath or declaration by the actual inventor or inventors as required by § 1.63 or as permitted by §§ 1.42, 1.43 or § 1.47;

(4) The processing fee set forth in § 1.17(i); and

(5) If an assignment has been executed by any of the original named inventors, the written consent of the assignee (see § 3.73(b) of this chapter).

After a careful review of the file and applicant having supplied sufficient cause for correction of inventorship and the required fee under the requirements of 37 CFR 1.48(a), the petition is hereby **granted**.

/Jack Chiang/

Jack Chiang, Supervisory Patent Examiner, Art Unit 2825

UNITED STATES PATENT AND TRADEMARK OFFICE

Commissioner for Patents
United States Patent and Trademark Office
P.O. Box 1450
Alexandria, VA 22313-1450
www.uspto.gov

FERNANDEZ & ASSOCIATES, LLP
PO BOX D
MENLO PARK, CA 94026-6402

COPY MAILED

NOV 16 2005

OFFICE OF PETITIONS

In re Application of	:	
Abrams et al.	:	DECISION ON PETITION
Application No. 10/408,928	:	TO WITHDRAW
Filed: April 6, 2003	:	FROM RECORD
Attorney Docket No. LUMI-P001	:	

This is a decision on the request to withdraw as attorney of record under 37 C.F.R. § 1.36, filed March 9, 2005.

The request is **NOT APPROVED**.

A grantable request to withdraw as attorney of record must be signed by every attorney seeking to withdraw or contain a clear indication that one attorney is signing on behalf of another/others. A request to withdraw will not be approved unless at least 30 (thirty) days would remain between the date of approval and the later of the expiration date of a time to file a response or the expiration date of the maximum time period which can be extended under 37 C.F.R. § 1.136(a).

The request cannot be approved because it lacks the reason(s) for which the patent attorneys associated with Customer Number 22877 are withdrawing.

All future communications from the Office will continue to be directed to the above-listed address until otherwise notified by applicant.

Telephone inquiries concerning this decision should be directed to Paralegal Liana Chase at (571) 272-3206.

David Bucci
Petitions Examiner
Office of Petitions

UNITED STATES PATENT AND TRADEMARK OFFICE

COMMISSIONER FOR PATENTS
UNITED STATES PATENT AND TRADEMARK OFFICE
P.O. BOX 1450
ALEXANDRIA, VA 22313-1450
www.uspto.gov

JUN 18 2004

VP
PAPER NO. ___

In re Application of Hershey Lerner et al. Serial Number: 10/408,947 Filed: April 8, 2003 For: FLUID FILLED UNIT FORMATION MACHINE AND PROCESS	:	PETITION UNDER M.P.E.P.708.02 IV

This is in response to the petition filed April 8, 2003, requesting that the above-identified application be granted Special Status under Section 708.02 IV of the MPEP and 37 CFR 1.102(c) (**no fee required**).

The request for Special Status considered under Section 708.02 IV of the MPEP is granted because criteria under 37 CFR 1.102(c) has been met.

Accordingly the petition is **GRANTED.**

Marian C. Knode

Marian C. Knode, Special Programs Examiner
Technology Center 1700
Chemical and Materials Engineering

WATTS, HOFFMANN, FISHER & HEINKE CO., L.P.A.
Ste. 1750
1100 Superior Ave.
Cleveland OH 44114

UNITED STATES PATENT AND TRADEMARK OFFICE

COMMISSIONER FOR PATENTS
UNITED STATES PATENT AND TRADEMARK OFFICE
P.O. BOX 1450
ALEXANDRIA, VA 22313-1450
www.uspto.gov

FEB -1 2005

In re Application of	:	
Georg Lorenz	:	NOTICE OF WITHDRAWAL
Serial No. 10/408,964	:	FROM ISSUE
Filed: April 8, 2003	:	UNDER 37 CFR 1.313(b)
For: APPARATUS AND METHOD FOR	:	
HANDLING OF TUBULARS	:	

The above-identified application is hereby withdrawn from issue after payment of the issue fee due to unpatentability of one or more claims. See 37 CFR 1.313(b)(3).

The issue fee is refundable upon written request. If, however, the application is again found allowable, the issue fee can be applied toward payment of the issue fee in the amount identified on the new Notice of Allowance and Issue Fee Due upon written request. This request and any balance due must be received on or before the due date noted in the new Notice of Allowance in order to prevent abandonment of the application.

Telephone inquiries should be directed to Peter Vo, SPE, Art Unit 3726 at (571) 272-4690. The above-identified application is being forwarded to the examiner for prompt appropriate action, including notifying applicant of the new status of this application.

E.R. Kazenske, Director
Technology Center 3700

Moser, Patterson & Sheridan, LLP
3040 Post Oak Boulevard, Suite 1500
Houston, TX 77056-6582

UNITED STATES PATENT AND TRADEMARK OFFICE

Commissioner for Patents
United States Patent and Trademark Office
P.O. Box 1450
Alexandria, VA 22313-1450
www.uspto.gov

PHARMACIA & UPJOHN
7000 Portage Road
KZO-300-104
KALAMAZOO, MI 49001

COPY MAILED

MAR 2 8 2007

OFFICE OF PETITIONS

In re Application of

Yan et al.

Application No. 10/408,967

Filed: April 8, 2003

Attorney Docket No. 00925.US1

DECISION ON PETITION

This is a decision on the petition under 37 CFR 1.137(b), filed January 18, 2007, to revive the above-identified application.

The petition is **GRANTED**.

The above-cited application became abandoned for failure to reply in a timely manner to the election/restriction requirement mailed December 27, 2005, which set a shortened period for reply of one (1) month from its mailing date. A response was not received within the allowable period, and the application became abandoned on January 28, 2006. A Notice of Abandonment was mailed on July 6, 2006.

The election filed January 18, 2007, is noted.

The address as cited on the petition differs from the correspondence address of record. Although a courtesy copy of this decision is being mailed to the address as cited on the petition, all future correspondence will be mailed solely to the address of record until appropriate written instructions to contrary are received.

The application is being forwarded to Technology Center 1600, GAU 1649 for further processing.

Telephone inquiries concerning this decision should be directed to the undersigned at (571) 272-3222.

Kenya A. McLaughlin
Petitions Attorney
Office of Petitions

Cc:
E. Victor Donahue, Esq.
Pfizer, Inc.
Patent Department, 5th Floor
150 East 42nd Street
New York, NY 10017-5755

SPE RESPONSE FOR CERTIFICATE OF CORRECTION

Paper No.: _____

DATE : 12-7-10

TO SPE OF : ART UNIT 3654

SUBJECT : Request for Certificate of Correction for Appl. No.: 10/408970 Patent No.: 7040566

Please respond to this request for a certificate of correction within 7 days.

FOR IFW FILES: Check Drawings

Please review the requested changes/corrections as shown in the **COCIN** document(s) in the IFW application image. No new matter should be introduced, nor should the scope or meaning of the claims be changed.

Please complete the response (see below) and forward the completed response to scanning using document code **COCX**.

FOR PAPER FILES:

Please review the requested changes/corrections as shown in the attached certificate of correction. Please complete this form (see below) and forward it with the file to:

Certificates of Correction Branch (CofC)
Randolph Square – 9D10-A
Palm Location 7580

Carrie Young

Certificates of Correction Branch

703-756-1814 _____

Thank You For Your Assistance

The request for issuing the above-identified correction(s) is hereby:

Note your decision on the appropriate box.

- ☑ **Approved** — **All** changes apply.
- ☐ **Approved in Part** — Specify below which changes **do not** apply.
- ☐ **Denied** — State the reasons for denial below.

Comments: _____

JOHN Q. NGUYEN
SUPERVISORY PATENT EXAMINER

SPE

3654
Art Unit

UNITED STATES PATENT AND TRADEMARK OFFICE

COMMISSIONER FOR PATENTS
UNITED STATES PATENT AND TRADEMARK OFFICE
P.O. BOX 1450
ALEXANDRIA, VA 22313-1450
www.uspto.gov

Beusse Brownlee Wolter Mora & Maire, P. A.
390 North Orange Avenue
Suite 2500
Orlando, FL 32801

COPY MAILED

APR 1 8 2005

OFFICE OF PETITIONS

In re Application of :
Jay Lipeles :
Application No. 10/408,981 : ON PETITION
Filed: April 8, 2003 :
Attorney Docket No. 624993-006 :

This is a decision on the petition under 37 CFR 1.137(b), filed December 10, 2004 and supplemented on January 6, 2005, to revive the above-identified application.

The petition is **GRANTED**.

A "Notice of Allowance and Issue Fee Due" was mailed to applicant on March 19, 2004, which set a three-month shortened statutory period for reply. Since the issue fee was not timely paid, the application became abandoned on June 20, 2004.

The Office acknowledges receipt of the issue fee, which was submitted with the instant petition.

In the supplemental petition, it is stated that the original petition was filed via certificate of mailing prior to the fee increase on December 8, 2004. The certificate of mailing was included in the Issue Fee Transmittal (form PTOL-85b), but not on the petition itself. However, there was a notation on the Issue Fee Transmittal indicating the fees submitted included the petition fee.

On the Issue Fee Transmittal, it is noted:

> "...Each additional paper, such as an assignment or formal drawing, must have its own certificate of mailing or transmission."

While petitioner has supplied a certificate of mailing dated December 6, 2004 with the supplemental petition, this certificate of mailing was not included with the original petition. In view thereof, the Office considers the original petition to have been received after the fee increase. Accordingly, the $65 balance of the petition fee will be charged to petitioner's deposit account, as authorized.

Telephone inquiries concerning this decision should be directed to the undersigned at (571) 272-3223.

The application file is being referred to the Publishing Division to be processed into a patent.

Marianne E. Jenkins
Petitions Examiner
Office of Petitions
Office of the Deputy Commissioner
for Patent Examination Policy

UNITED STATES PATENT AND TRADEMARK OFFICE

COMMISSIONER FOR PATENTS
UNITED STATES PATENT AND TRADEMARK OFFICE
P.O. BOX 1450
ALEXANDRIA, VA 22313-1450
www.uspto.gov

Paper No.

WORKMAN NYDEGGER (F/K/A WORKMAN NYDEGGER & SEELEY)
60 EAST SOUTH TEMPLE
1000 EAGLE GATE TOWER
SALT LAKE CITY, UT 84111

COPY MAILED

MAR 1 8 2004

OFFICE OF PETITIONS

In re Application of	:
Stephen C. Gordy	:
Application No. 10/409,006	: DECISION ON PETITION
Filed: April 7, 2003	: UNDER 37 CFR 1.78(a)(6)
Attorney Docket No. 15436.204.1	:

This is a decision on the petition under 37 CFR 1.78(a)(6), filed January 27, 2004, to accept an unintentionally delayed claim under 35 U.S.C. §119(e) for the benefit of prior-filed provisional Application No. 60/459,166, filed March 31, 2003.

The petition is **Granted.**

A petition under 37 CFR 1.78(a)(6) is only applicable to those applications filed on or after November 29, 2000. Further, the petition is appropriate only after expiration of the period specified in 37 CFR 1.78(a)(5)(ii) and must be filed during the pendency of the nonprovisional application. In addition, the petition must be accompanied by:

(1) the surcharge set forth in 37 CFR 1.17(t);

(2) a statement that the entire delay between the date the claim was due under 37 CFR 1.78(a)(5)(ii) and the date the claim was filed was unintentional; and

(3) the reference to the prior-filed provisional application supplied in an application data sheet (ADS)(37 CFR 1.76) or as an amendment in the first sentence of the specification following the title. *See* 35 U.S.C. 119(e) and 37 CFR 1.78(a)(5)(iii). The Commissioner may require additional information where there is a question whether the delay was unintentional.

The instant pending nonprovisional application was filed on April 7, 2003, within twelve months of the filing date of the prior-filed provisional application, Application No. 60/459,166, which was filed on March 31, 2003, for which priority is claimed. A reference to the prior-filed provisional application has been included in an amendment to the first sentence of the specification following the title.

The instant nonprovisional application was filed after November 29, 2000, and the claim for priority herein is submitted after expiration of the period specified in 37 CFR 1.78(a)(5)(ii). Also, the reference to the prior-filed provisional application was submitted during the pendency of the nonprovisional application for which the benefit is sought. *See* 35 U.S.C. §119(e). Accordingly, having found that the instant petition satisfies the conditions of 37 CFR 1.78(a)(6) for acceptance of an unintentionally delayed claim for priority under 35 U.S.C. §119(e), the petition to accept an unintentionally delayed claim of benefit to prior-filed provisional Application No. 60/459,166 is granted.

The granting of the petition to accept the delayed benefit claim to the prior-filed application under 37 CFR 1.78(a)(6) should not be construed as meaning that the instant application is entitled to the benefit of the filing date of the prior-filed application. In order for the instant application to be entitled to the benefit of the prior-filed application, all other requirements under 35 U.S.C. §119(e) and 37 CFR 1.78(a)(4) and (a)(5) must be met. Similarly, the fact that the corrected Filing Receipt accompanying this decision on petition includes the prior-filed application should not be construed as meaning that applicant is entitled to the claim for benefit of priority to the prior-filed application noted thereon. Accordingly, the examiner will, in due course, consider this benefit claim and determine whether the instant application is entitled to the benefit of the earlier filing date.

A corrected Filing Receipt, which includes the priority claim to the prior-filed provisional application, accompanies this decision on petition.

Any inquiries concerning this decision may be directed to the undersigned at (703) 305-8859.

The examiner of Technology Center AU 2127 will consider applicant's entitlement to claim benefit of priority under 35 U.S.C. §119(e) to prior-filed provisional Application No. 60/459,166, filed March 31, 2003.

Karen Creasy

Karen Creasy
Petitions Examiner
Office of Petitions
Office of the Deputy Commissioner
for Patent Examination Policy

ATTACHMENT: Corrected Filing Receipt

UNITED STATES PATENT AND TRADEMARK OFFICE

COMMISSIONER FOR PATENTS
UNITED STATES PATENT AND TRADEMARK OFFICE
P.O. BOX 1450
ALEXANDRIA, VA 22313-1450
www.uspto.gov

JJGJr: 09-04

Paper No: __

WORKMAN NYDEGGER
(F/K/A WORKMAN NYDEGGER & SEELEY)
60 EAST SOUTH TEMPLE
1000 EAGLE GATE TOWER
SALT LAKE CITY UT 84111

COPY MAILED
SEP 30 2004
OFFICE OF PETITIONS

In re Application of	:
Gordy, et al.	:
Application No. 10/409,006	: DECISION ON PETITION
Filed: 7 April, 2003	:
Attorney Docket No. 15436.204.1	:

This is a decision on the petition, filed 5 August, 2004, to revive the instant nonprovisional application under the provisions of 37 C.F.R. §1.137(f).

The petition is **GRANTED**.

Petitioner states that the instant nonprovisional application is the subject of an application filed in a foreign country on 19 March, 2004. Moreover, Petitioner submitted the instant petition (recission request inherent) on 5 August, 2004, upon learning of the error.

Thus, Petitioner alleges unintentional failure to notify the U.S. Patent and Trademark Office of this filing of the subject application in a foreign country within 45 days of that filing.

In view of the above, this application became abandoned pursuant to 35 U.S.C. §122(b)(2)(B)(iii) and 37 C.F.R. §1.213(c) for failure to timely notify the Office of the filing of an application in a foreign country, or under a multilateral international agreement, that requires publication of applications 18 months after filing.

A petition under 37 C.F.R. §1.137(f) must be accompanied by:

(1) the reply--which is met by the notification of such filing in a foreign country or under a multinational treaty;

(2) the petition fee as set forth in 37 C.F.R. §1.17(m); and

(3) a statement that the entire delay in filing the required reply from the due date of the reply until the filing of a grantable petition was unintentional.

The instant petition has been found to be in compliance with 37 C.F.R. §1.137(f). Accordingly, the failure to timely notify the Office of a foreign or international filing within 45 days after the date of filing of such foreign or international application as provided by 35 U.S.C. §122(b)(2)(B)(iii) and 37 C.F.R. §1.213(c) is accepted as having been unintentionally delayed.

The previous Request and Certification under 35 U.S.C. §122(b)(2)(B)(I) has been rescinded. A Notice Regarding Rescission of Nonpublication Request, which sets forth the projected publication date of 6 January, 2005, accompanies this decision.

This application is being released to Technology Center 2100 for further processing in due course.

Inquiries concerning this decision may be directed to the undersigned at (571) 272-3214.

John J. Gillon, Jr.
Senior Attorney
Office of Petitions

ATTACHMENT: Notice Regarding Rescission of Nonpublication Request

UNITED STATES PATENT AND TRADEMARK OFFICE

UNITED STATES DEPARTMENT OF COMMERCE
United States Patent and Trademark Office
Address: COMMISSIONER FOR PATENTS
P.O. Box 1450
Alexandria, Virginia 22313-1450
www.uspto.gov

APPLICATION NUMBER	FILING/RECEIPT DATE	FIRST NAMED APPLICANT	ATTY. DOCKET NO.
10/409,006	04/07/2003	Stephen C. Gordy	15436.204.1

CONFIRMATION NO. 4080

022913
WORKMAN NYDEGGER (F/K/A WORKMAN NYDEGGER & SEELEY)
60 EAST SOUTH TEMPLE
1000 EAGLE GATE TOWER
SALT LAKE CITY, UT 84111

OC000000013946367

Date Mailed: 09/30/2004

Communication Regarding Rescission Of Nonpublication Request and/or Notice of Foreign Filing

Applicant's rescission of the previously-filed nonpublication request and/or notice of foreign filing is acknowledged. The paper has been reflected in the Patent and Trademark Office's (USPTO's) computer records so that the earliest possible projected publication date can be assigned.

The projected publication date is 01/06/2005.

If applicant rescinded the nonpublication request before or on the date of "foreign filing,"[1] then no notice of foreign filing is required.

If applicant foreign filed the application after filing the above application and before filing the rescission, and the rescission did not also include a notice of foreign filing, then a notice of foreign filing (not merely a rescission) is required to be filed within 45 day of the date of foreign filing. See 35 U.S.C. § 122(b)(2)(B)(iii), and Clarification of the United States Patent and Trademark Office's Interpretation of the Provisions of 35 U.S.C. § 122(b)(2)(B)(ii)-(iv), 1272 Off. Gaz. Pat. Office 22 (July 1, 2003).

If a notice of foreign filing is required and is not filed within 45 days of the date of foreign filing, then the application becomes bandoned pursuant to 35 U.S.C. § 122(b)(2)(B)(iii). In this situation, applicant should either file a petition to revive or notify the Office that the application is abandoned. See 37 CFR 1.137(f). Any such petition to revive will be forwarded to the Office of Petitions for a decision. Note that the filing of the petition will not operate to stay any period of reply that may be running against the application.

Questions regarding petitions to revive should be directed to the Office of Petitions at (703) 305-9282. Questions regarding pu lications of patent applications should be directed to the patent application publication hotline at (703) 605-4283 or by e-mail pgpub@uspto.gov.

[1] Note, for purpose of this notice, that "foreign filing" means "filing an application directed to the same invention in another country, or under a multilateral international agreement, that requires publication of applications 18 months after filing".

SPE RESPONSE FOR CERTIFICATE OF CORRECTION

Paper No.: _____

DATE : June 19, 2008

TO SPE OF : ART UNIT 2800

SUBJECT : Request for Certificate of Correction for Appl. No 10/409006 patent no6898632

Please respond to this request for a certificate of correction within 7 days.

Please review the requested changes/corrections as shown in the **COCIN** document(s) in the IFW application image. No new matter should be introduced, nor should the scope or meaning of the claims be changed.

Please complete the response (see below) and forward the completed response to scanning using document code **COCX**

Magdalene Talley

Certificates of Correction Branch

703-308-9390 ext. 116

Thank You For Your Assistance

The request for issuing the above-identified correction(s) is hereby:

Note your decision on the appropriate box.

- ☒ **Approved** — **All** changes apply.
- ☐ **Approved in Part** — Specify below which changes **do not** apply.
- ☐ **Denied** — State the reasons for denial below.

Comments: All changes approved.

/Andrew Caldwell/

Supervisory Patent Examiner — **SPE**

2142 — **Art Unit**

UNITED STATES PATENT AND TRADEMARK OFFICE

Commissioner for Patents
United States Patent and Trademark Office
P.O. Box 1450
Alexandria, VA 22313-1450
www.uspto.gov

MINTZ, LEVIN, COHN, FERRIS, GLOVSKY AND POPEO, P.C
5 PALO ALTO SQUARE - 6TH FLOOR
3000 EL CAMINO REAL
PALO ALTO CA 94306-2155

COPY MAILED

AUG 19 2009

OFFICE OF PETITIONS

In re Application of	:	
Grubbs et al.	:	DECISION ON PETITION
Application No. 10/409,017	:	TO WITHDRAW
Filed: April 7, 2003	:	FROM RECORD
Attorney Docket No. 1950-0019	:	

This is a decision on the Request to Withdraw as attorney or agent of record under 37 C.F.R. § 1.36(b), filed July 2, 2009.

The request is **APPROVED**.

A grantable request to withdraw as attorney/agent of record must be signed by every attorney/agent seeking to withdraw or contain a clear indication that one attorney is signing on behalf of another/others. The Office will require the practitioner(s) to certify that he, she or they have: (1) given reasonable notice to the client, prior to the expiration of the reply period, which the practitioner(s) intends to withdraw from employment; (2) delivered to the client or a duly authorized representative of the client all papers and property (including funds) to which the client is entitled; and (3) notified the client of any replies that may be due and the time frame within which the client must respond, pursuant to 37 CFR 10.40 (c).

The request was signed by Flavio M. Rose on behalf of all attorneys/agents of record who are associated with Customer Number 23980.

All attorneys/agents associated with Customer Number 23980 have been withdrawn. Applicant(s) is/are reminded that there is no attorney of record at this time.

The correspondence address remains unchanged.

Telephone inquires concerning this decision should be directed to the undersigned at (571) 272-3206. All other inquires concerning either the examination or status of the application should be directed to the Technology Center.

Liana Walsh
Petitions Examiner
Office of Petitions

UNITED STATES PATENT AND TRADEMARK OFFICE

UNITED STATES DEPARTMENT OF COMMERCE
United States Patent and Trademark Office
Address: COMMISSIONER FOR PATENTS
P.O. Box 1450
Alexandria, Virginia 22313-1450
www.uspto.gov

MARK L. WARZEL
MATERIA, INC.
60 N. SAN GABRIEL BLVD.
PASADENA, CA 91107-3748

Mail Date: 04/22/2010

Applicant	: Robert H. Grubbs	: DECISION ON REQUEST FOR
Patent Number	: 7598330	: RECALCULATION of PATENT
Issue Date	: 10/06/2009	: TERM ADJUSTMENT IN VIEW
Appliction No	: 10/409,017	: OF WYETH
Filed	: 04/07/2003	:
		:

The Patentee's Request for Recalculation is **DISMISSED.**

This Request is deemed ineligible for consideration for one or more of the following reasons:

(A). The patent for which PTA recalculation is requested is either a design or reissue application or is a reexamination proceeding;

(B). The patent for which PTA recalculation is requested resulted from a utility or plant application filed under 35 USC 111(a) before May 29, 2000 and no CPA filed in the application on/after May 29, 2000;

(C). The patent for which PTA recalculation is requested resulted from an international application in which the international filing date was before May 29, 2000 and no CPA filed in the application on/after May 29, 2000;

(D). The patent for which PTA recalculation is requested issued on/after March 2, 2010;

(E). The Request for Recalculation was filed more than 180 days after the grant date of the patent and the request was not filed within two months of a dismissal of a request for reconsideration of the of the patent term under 37 CFR 1.705(d);

(F). The Request for Recalculation is not solely limited to USPTO pre-Wyeth interpretation of 35 U.S.C. 154(b)(2)(A);

or

(G). A civil action was filed pursuant to 35 U.S.C. 154(b)(4)(A)concerning the same patent at issue in this request.

Patentee may file a reply to this decision dismissing the Request for Recalculation. Patentee must file such reply within one month or thirty days, whichever is longer, of the mail date of the decision dismissing the Request for Recalculation. No fee is required if patentee is asserting in the reply that the dismissal for ineligibility is improper.

Patentee should use document code PET.OP if electronically filing a reply to this dismissal. If the USPTO finds that the request was improperly deemed ineligible, the USPTO will mail applicant a recalculation determination.

Patentee should be aware that in order to preserve the right to review in the United States District Court for the District of Columbia of the USPTO patent term adjustment determination, patentee must ensure that he or she also take the steps required under 35 U.S.C. 154(b)(4)(A). Nothing in the request for recalculation should be construed as providing an alternative time frame for commencing a civil action under 35 U.S.C. 154 (b)(4)(A).

Any questions concerning this decision should be directed to the Office of Patent Legal Administration at 571-272-7702.

UNITED STATES
PATENT AND
TRADEMARK OFFICE

Commissioner for Patents
Washington, DC 20231
www.uspto.gov

6/30/03

Hamilton Brook Smith and Reynolds P C
530 Virginia Road
P O Box 9133
Concord MA 01742-9133

Dear Applicant:

The Box PGPub replacement drawings for application number 10/409,029 received on 6/2/03 by the U. S. Patent and Trademark Office will be included for patent publication.

Telephone inquiries should be directed to Customer Service, Office of Initial Patent Examination, at 703-308-1202.

UNITED STATES
PATENT AND
TRADEMARK OFFICE

Commissioner for Patents
Washington, DC 20231
www.uspto.gov

Signature of Reviewer, Office of Initial Patent Examination

UNITED STATES PATENT AND TRADEMARK OFFICE

COMMISSIONER FOR PATENTS
UNITED STATES PATENT AND TRADEMARK OFFICE
P.O. BOX 1450
ALEXANDRIA, VA 22313-1450
www.uspto.gov

Paper No. 6

HAMILTON BROOK SMITH & REYNOLDS PC
530 VIRGINIA ROAD
PO BOX 9133
CONCORD MA 01742-9133

COPY MAILED

OCT 3 0 2003

OFFICE OF PETITIONS

In re Application of Carlo Amalfitano and James A. Proctor, Jr. Application No. 10/409,031 Filed: April 7, 2003 Attorney Docket No. 2479.1021-005	DECISION ACCORDING STATUS UNDER 37 CFR 1.47(a)

This is in response to the petition under 37 CFR 1.47(a), filed September 29, 2003 (Certificate of Mailing dated September 25, 2003).

The petition under 37 CFR 1.47(a) is **GRANTED**.

The above-identified application was filed on April 27, 2003, without a fully executed oath or declaration and the statutory basic filing fee. Accordingly, on July 7, 2003, a Notice to File Missing Parts of Nonprovisional Application was mailed, requiring these missing items and fees, together with a surcharge for their late filing. This Notice set a two month extendable period for reply.

In reply, applicant filed the instant petition under 37 CFR 1.47(a) on September 29, 2003, together with the statutory basic filing fee and surcharge. The petition was made timely by obtaining a one month extension of time. Accompanying the petition was a declaration executed by joint inventor Carlo Amalfitano, but with the signature block for joint inventor James A. Proctor, Jr. left blank.

A grantable petition under 37 CFR 1.47(a) requires: (1) proof that the non-signing inventor(s) cannot be reached or refuses to sign the oath or declaration after having been presented with the application papers (specification, claims and drawings); (2) an

acceptablee oath or declaration in compliance with 37 CFR 1.63; (3) the petition fee; and (4) a statement of the last known address of the non-signing inventor(s).

On petition, applicant has included a cover letter to the last known address of Proctor, dated May 2, 2003, transmitting the application papers. According to Rule 47 applicant, as of the date of the petition, no executed declaration from Proctor has been received.

On petition, Rule 47 applicant has submitted a declaration in compliance with 37 CFR 1.63 and satisfied the requirements of 37 CFR 1.47(a). Accordingly, the above-identified application is hereby accorded Rule 1.47(a) status.

Pursuant to 37 CFR 1.47(c), this Office will forward notice of this application's filing to the non-signing inventor at the last known address given in the petition. Notice of the filing of this application will also be published in the Official Gazette.

The application file is being forwarded to the Office of Initial Patent Examination for preexamination processing.

Telephone inquiries related to this decision may be directed to the undersigned at (703) 305-0272.

Cliff by

Cliff Congo
Petitions Attorney
Office of Petitions

UNITED STATES PATENT AND TRADEMARK OFFICE

Commissioner for Patents
United States Patent and Trademark Office
P.O. Box 1450
Alexandria, VA 22313-1450
www.uspto.gov

DORITY & MANNING, P.A.
POST OFFICE BOX 1449
GREENSVILLE, SC 29602-1449

COPY MAILED

DEC 2 2 2004

OFFICE OF PETITIONS

In re Application of
Ritter et al.
Application No. 10/409,036
Filed: April 8, 2003
Attorney Docket No. AVX-247

ON PETITION

This is a decision on the petition under 37 CFR 1.182, filed July 12, 2004, to change the order of the names of the inventors.

The petition is **GRANTED**.

The order of the names of the inventors will be changed as follows:

1. Andrew P. Ritter
2. John L. Galvagni
3. Jason MacNeal
4. Robert Heistand II
5. Sriram Dattaguru

A petition fee of $130.00 is required. Accordingly, the petition fee will be charged to petitioner's deposit account as authorized.

This matter is now being referred to the Publishing Division for processing into a patent.

Telephone inquiries should be directed to Paralegal Liana Chase at (571) 272-3282.

Frances Hicks
Petitions Examiner
Office of Petitions
Office of the Deputy Commissioner
for Patent Examination Policy

Enclosure: Corrected Filing Receipt

UNITED STATES PATENT AND TRADEMARK OFFICE

Commissioner for Patents
United States Patent and Trademark Office
P.O. Box 1450
Alexandria, VA 22313-1450
www.uspto.gov

Paper No.

SUGRUE, MION, ZINN, MACPEAK, & SEAS
2100 Pennsylvania Avenue, NW
Washington DC 20037

MAR 11 2005

In re Application of:
GALVAGNI *et al.*
Serial No.: 10/409,036
Filed: April 8, 2003
Attorney Docket No.: **AVX-247**

NOTICE OF WITHDRAWAL
FROM ISSUE
UNDER 37 CFR § 1.313

The purpose of this communication is to inform you that the above-identified application is being withdrawn from issue pursuant to 37 CFR § 1.313.

The above-identified application is hereby withdrawn from issue. The Notice of Allowance and Issue Fee Due and the Notice of Allowability mailed August 17, 2004, are hereby vacated.

The application is being withdrawn to permit reopening of prosecution. The reasons therefor will be communicated to you by the examiner in the next Office action.

Upon receipt of a new Notice of Allowance and Issue Fee Due, applicant may request that any previously submitted issue fee be applied toward payment of the issue fee in the amount identified on the new Notice of Allowance and Issue Fee Due. If the application is abandoned, applicant may request either a refund, or a credit to a Deposit Account.

Telephone inquires should be directed to Dean Reichard at (571) 272-1984.

The above-identified application is being forwarded to the examiner for prompt appropriate action.

Richard Seidel, Director
Technology Center 2800
Semiconductors, Electrical and Optical
Systems and Components

UNITED STATES PATENT AND TRADEMARK OFFICE

Commissioner for Patents
United States Patent and Trademark Office
P.O. Box 1450
Alexandria, VA 22313-1450
www.uspto.gov

WOODARD, EMHARDT, MORIARTY,
MCNETT & HENRY LLP
BANK ONE CENTER/TOWER
111 MONUMENT CIRCLE, SUITE 3700
INDIANAPOLIS, IN 46204-5137

MAILED

JUL 01 2010

OFFICE OF PETITIONS

In re Application of :
Han H. Nee :
Application No. 10/409,037 : LETTER
Filed: April 8, 2003 :
Attorney Docket No.: 7272-18 :

This is in response to the communication filed September 16, 2004, which is being treated as a request for acceptance of a fee deficiency submission under 37 CFR 1.28. The delay in responding is regretted; however, the communication was recently referred to the Office of Petitions for consideration.

The communication is not signed by a registered practitioner currently of record. However, in accordance with 37 CFR 1.34(a), the signature of John J. Emanuele appearing on the communication constitutes a representation to the United States Patent and Trademark Office that he is authorized to represent the particular party on whose behalf he acts.

On September 1, 1998, the Court of Appeals for the Federal Circuit held that 37 CFR 1.28(c) is the sole provision governing the time for correction of the erroneous payment of the issue fee as a small entity. **See DH Technology v. Synergystex International, Inc. 154 F.3d 1333, 47 USPQ2d 1865 (Fed. Cir. Sept. 1, 1998).**

The Office no longer investigates or rejects original or reissue applications under 37 CFR 1.56. **1098 Off. Gaz. Pat. Office 502 (January 3, 1989)**. Therefore, nothing in this Notice is intended to imply that an investigation was done.

Your fee deficiency submission under 37 CFR 1.28 is hereby **ACCEPTED**. Status as a small entity has been removed.

Inquiries related to this communication should be directed to the Office of Petitions Staff at (571) 272-3282.

Sherry D. Brinkley
Petitions Examiner
Office of Petitions

UNITED STATES DEPARTMENT OF COMMERCE
U.S. Patent and Trademark Office
Address: COMMISSIONER FOR PATENTS
P.O. Box 1450
Alexandria, Virginia 22313-1450

APPLICATION NO./ CONTROL NO.	FILING DATE	FIRST NAMED INVENTOR / PATENT IN REEXAMINATION	ATTORNEY DOCKET NO.
10/409,039	4/7/2003	CHARLES R. ROGERS	151P10769US01

EXAMINER
MANUEL, GEORGE C.

ART UNIT	PAPER
3762	0518051

IPLM GROUP, P.A.
POST OFFICE BOX 18455
MINNEAPOLIS, MN 55418

DATE MAILED:

Please find below and/or attached an Office communication concerning this application or proceeding.

Commissioner for Patents

UNITED STATES PATENT AND TRADEMARK OFFICE

Commissioner for Patents
United States Patent and Trademark Office
P.O. Box 1450
Alexandria, VA 22313-1450
www.uspto.gov

MAY 18 2005

In re Application of ROGERS ET AL.
Appl. No.: 10/409,039
Filed: April 07, 2003
For: System and Method for Monitoring Power Source Longevity of an Implantable Medical Device

DECISION ON PETITION UNDER 37 CFR 1.59

This is a decision on the petition under 37 CFR 1.59(b), filed December 29, 2003, to expunge information from the above identified application.

The petition is granted.

Petitioner requests that a document submitted per the provisions of MPEP§ 724.04 and 37 CFR § 1.59 in an envelope marked "Proprietary Material Not Open To Public. To Be Opened Only By The Examiner Or Other Authorized U.S. Patent and Trademark Office Employee", filed December 29, 2003, be expunged from the record. Petitioner states that either (A) that the information contains trade secret material, proprietary material and/or material that is subject to a protective order which has not been made public; or (B) that the information submitted was unintentionally submitted and the failure to obtain its return would cause irreparable harm to the party who submitted the information or to the party in interest on whose behalf the information was submitted, and the information has not otherwise been made public. The petition fee set forth in 37 CFR 1.17(h) has been paid.

The information in question has been determined by the undersigned to not be material to the examination of the instant application.

Applicant is required to retain the expunged material(s) for the life of any patent which issues on the above-identified application.

The expunged material has been removed from the official file.

Richard A. Bertsch, Director
Technology Center 3700

UNITED STATES PATENT AND TRADEMARK OFFICE

Commissioner for Patents
United States Patent and Trademark Office
P.O. Box 1450
Alexandria, VA 22313-1450
www.uspto.gov

Finnegan, Henderson, Farabow, Garrett, & Dunner
1300 I Street, N.W.
Washington, DC 20005

COPY MAILED

DEC 1 0 2007

OFFICE OF PETITIONS

In re Application of
Kikuchi et al.
Application No. 10/409,049
Filed: April 9, 2003

: DECISION GRANTING PETITION

This decision is in response to Applicants' "APPLICATION FOR PATENT TERM ADJUSTMENT UNDER 37 CFR 1.705" filed on July 25, 2007 requesting that the Office adjust the PTA determination at the time of the mailing of the Notice of Allowance from 0 days to 329 days.

Applicants' petition to correct PTA is **GRANTED-in Part.** The Office will adjust the PTA at the time of the mailing of the notice of allowance to reflect THREE HUNDRED AND Twenty-Eight (328) days. The Office will provide a copy of the adjusted PTA determination with this decision.

Applicant argues that the Office calculated the 14-month rule under 37 CFR 1.702(a)(2) because the Office improperly used the date of October 6, 2004, rather than the date of August 17, 2005 as the Office's mailed paper within the meaning of 35 U.S.C. 132.[1] Applicants believe that to be 435 day delay.[2] Applicants believe the overall determination at the time of the mailing of the notice of allowance to be 329 days. Applicants do not proffer any rationale as to why the period is reduced by

Applicant arguments as are persuasive but for the reasons outlined in this decision. The record reflects that the Office did not mail the first office action until August 17, 2005, a 434-day delay under 37 CFR 1.702(a)(1). However, applicant did delay by a period of 92 days in responding to the non-final rejection properly mailed on August 17, 2005.[3] Moreover, applicant delay by a

---

[1]The record reflects that the Office did not properly mail the non-final rejection until August 17, 2006.

[2]The Office has determined the time period under 37 CFR 1.702(a)(1) to be 434 days rather than applicant determined amount of 435 days.

[3]The delay began on November 18, 2005 and ending on February 17, 2006, a ninety-two day delay.

period of fourteen days under 37 CFR 1.704(c)(8). [4] Accordingly, the proper determination of PTA at the time of the mailing of the notice of allowance is 328(434-92-14=328)
After the mailing of this decision, the Office will forward the application to the Office of Patent Publications for a prompt issuance of the patent. Any delays pursuant to 37 CFR 1.702(b) or 1.702(a)(4) will be reflected in the issue notification letter that is mailed to applicant approximately three weeks prior to issuance of the application.

The Office has assessed the $200.00 fee. No additional fees are required in deciding this petition matter.

Any questions concerning this decision should be directed to Kery Fries, Senior Legal Advisor, Office of Patent Legal Administration at 571-272-7757.

Kery A Fries

Kery Fries
Senior Legal Advisor
Office of Patent Legal Administration
Office of Deputy Commissioner
for Patent Examination Policy

cc: Copy of Adjusted Pair Calculation

[4]The delay of fourteen days was for the submission of an IDS on March 3, 2006 which was supplemental to the reply submitted on February 17, 2006. Applicant did not contest this fourteen day period nor submit a waiver pursuant to 37 CFR 1.704(d).

Day : Friday
Date: 12/7/2007

PALM INTRANET

Time: 14:22:56

PTA Calculations for Application: 10/409049

Application Filing Date:	04/09/2003	PTO Delay (PTO):	119
Issue Date of Patent:		Three Years:	0
Pre-Issue Petitions:	0	Applicant Delay (APPL):	421
Post-Issue Petitions:	0	Total PTA (days):	328
PTO Delay Adjustment:	630		

File Contents History

Number	Date	Contents Description	PTO	APPL	START
55	12/07/2007	ADJUSTMENT OF PTA CALCULATION BY PTO		92	
54	12/07/2007	ADJUSTMENT OF PTA CALCULATION BY PTO	434		
53	12/07/2007	ADJUSTMENT OF PTA CALCULATION BY PTO		119	
52	12/07/2007	ADJUSTMENT OF PTA CALCULATION BY PTO	407		
46	04/30/2007	MAIL NOTICE OF ALLOWANCE			
45	04/26/2007	ISSUE REVISION COMPLETED			
44	04/11/2007	ALLOWED CASE RETURNED TO THE EXAMINER FOR CLERICAL PROCESSING			
43	04/11/2007	DOCUMENT VERIFICATION			
42	04/11/2007	NOTICE OF ALLOWANCE DATA VERIFICATION COMPLETED			
41	04/02/2007	NOTICE OF ALLOWABILITY			
40	01/31/2007	DATE FORWARDED TO EXAMINER			
39	01/09/2007	RESPONSE AFTER NON-FINAL ACTION			
38	10/10/2006	MAIL NON-FINAL REJECTION			
37	10/06/2006	FINISHED INITIAL DATA CAPTURE			
36	10/02/2006	NON-FINAL REJECTION			
35	07/26/2006	DATE FORWARDED TO EXAMINER			
34	07/14/2006	AMENDMENT SUBMITTED/ENTERED WITH FILING OF CPA/RCE			
33	07/26/2006	DATE FORWARDED TO EXAMINER			
32	07/14/2006	REQUEST FOR CONTINUED EXAMINATION (RCE)			
31	07/26/2006	DISPOSAL FOR A RCE/CPA/129 (EXPRESS ABANDONMENT IF CPA)			
30	07/14/2006	WORKFLOW - REQUEST FOR RCE - BEGIN			
29	06/09/2006	EXPORT TO INITIAL DATA CAPTURE			

28	06/05/2006	MAIL NOTICE OF ALLOWANCE			
27	06/02/2006	ISSUE REVISION COMPLETED			
26	06/02/2006	NOTICE OF ALLOWANCE DATA VERIFICATION COMPLETED			
25	05/30/2006	NOTICE OF ALLOWABILITY			
24	03/03/2006	INFORMATION DISCLOSURE STATEMENT CONSIDERED			
23	03/03/2006	INFORMATION DISCLOSURE STATEMENT (IDS) FILED		14	20
22	03/03/2006	REFERENCE CAPTURE ON IDS			
21	03/18/2006	DATE FORWARDED TO EXAMINER			
20	02/17/2006	RESPONSE AFTER NON-FINAL ACTION		407	16
19	02/17/2006	REQUEST FOR EXTENSION OF TIME - GRANTED			
18	08/17/2005	MAIL NOTICE OF RESTARTED RESPONSE PERIOD			
17	08/16/2005	LETTER RESTARTING PERIOD FOR RESPONSE (I.E. LETTER RE: REFERENCES)			
16	10/06/2004	MAIL NON-FINAL REJECTION	119		-1
15	10/01/2004	NON-FINAL REJECTION			
14	05/24/2004	IFW TSS PROCESSING BY TECH CENTER COMPLETE			
13	06/17/2003	CASE DOCKETED TO EXAMINER IN GAU			
12	04/09/2003	INFORMATION DISCLOSURE STATEMENT (IDS) FILED			
11	04/09/2003	PRELIMINARY AMENDMENT			
10	06/09/2003	APPLICATION RETURN FROM OIPE			
9	06/10/2003	APPLICATION IS NOW COMPLETE			
8	06/09/2003	PRE-EXAM OFFICE ACTION WITHDRAWN			
7	06/09/2003	APPLICATION RETURN TO OIPE			
6	06/09/2003	APPLICATION DISPATCHED FROM OIPE			
5	06/09/2003	APPLICATION IS NOW COMPLETE			
2	04/30/2003	IFW SCAN & PACR AUTO SECURITY REVIEW			
1	04/09/2003	INITIAL EXAM TEAM NN			

Search Another: Application# [ ] Search

EXPLANATION OF PTA CALCULATION

EXPLANATION OF PTE CALCULATION

To go back use Back button on your browser toolbar.

Back to PALM | ASSIGNMENT | OASIS | Home page

UNITED STATES PATENT AND TRADEMARK OFFICE

Commissioner for Patents
United States Patent and Trademark Office
P.O. Box 1450
Alexandria, VA 22313-1450
www.uspto.gov

Gowling Lafleur Henderson LLP
Suite 4900
Commerce Court West
Toronto ON M5L 1J3 CA CANADA

COPY MAILED

NOV 17 2008

OFFICE OF PETITIONS

In re Application of

Shane Zwezdaryk

Application No. 10/409,064

Filed: April 9, 2003

Attorney Docket No. T8467350US

DECISION ON PETITION

This is a decision on the petition under 37 CFR 1.181(a) to withdraw the holding of abandonment, filed February 6, 2007.

The petition under 37 CFR 1.181(a) to withdraw the holding of abandonment is **granted**.

This application was held abandoned on October 14, 2006, after it was believed that no response was received to the final Office action mailed July 13, 2006. The final Office action allowed a period for reply of three months from its mailing date. Extensions of the time set for reply were available pursuant to 37 CFR 1.136(a). A Notice of Abandonment was mailed on January 23, 2007, indicating that a reply to the final Office action mailed October 13, 2006, was not received[1].

The instant petition maintains that Request for Continued Examination and amendment responsive to the final Office action was transmitted via facsimile on October 5, 2006. A copy of the response containing a certificate of transmission under 37 CFR 1.8 dated October 5, 2006, accompanied the petition.

Section 711.03(c) of the *Manual of Patent Examining Procedure* provides, in pertinent part, that:

> Where a certificate of mailing under 37 CFR 1.8, but not a postcard receipt, is relied upon in a petition to withdraw the holding of abandonment, see 37 CFR 1.8(b) and MPEP § 512. As stated in 37 CFR 1.8(b)(3) the statement that attests to the previous timely mailing or transmission of the correspondence must be on a personal knowledge basis, or to the satisfaction of the Director of the USPTO. If the statement attesting to the previous timely mailing is not made by the person who signed the Certificate of Mailing (i.e., there is no personal knowledge basis), then the statement attesting to the previous timely mailing should include evidence that supports the conclusion that the correspondence was actually mailed (e.g., copies of a mailing log establishing that

[1] As there is no record of applicant's October 5, 2006, response to the final rejection, it is believed that the iteration of the date of the final rejection as October 13, 2006, in the Notice of Abandonment was a typographical error. The date should have been July 13, 2006.

> correspondence was mailed for that application). When the correspondence is shown to have been timely filed based on a certificate of mailing, the correspondence is entered into PALM with the actual date of receipt (i.e., the date that the duplicate copy of the papers was filed with the statement under 37 CFR 1.8).

Mr. Peter Milne signed the certificate of transmission under 37 CFR 1.8 and signed the petition document attesting to fact the response was transmitted on October 5, 2006. The evidence is, therefore, convincing that the response was timely transmitted and lost by the Office.

Based on the aforementioned, it appears that the application was improperly held abandoned as a proper response was received prior to expiration of the statutory period for reply. The holding of abandonment is withdrawn, accordingly. No petition fee is due.

Deposit account 07-1750 will be charged $100.00 for the Request for Continued Examination.

The application file is being forwarded Technology Center 3600, GAU 3636 for further processing, including treatment of the Request for Continued Examination filed October 5, 2006.

Kenya A. McLaughlin
Petitions Attorney
Office of Petitions

UNITED STATES PATENT AND TRADEMARK OFFICE

Commissioner for Patents
United States Patent and Trademark Office
P.O. Box 1450
Alexandria, VA 22313-1450
www.uspto.gov

MAILED

MAY 22 2009

OFFICE OF PETITIONS

BAKER & HOSTETLER LLP
WASHINGTON SQUARE, SUITE 1100
1050 CONNECTICUT AVENUE, N.W.
WASHINGTON, DC 20036

In re Application of	:	
Nicholas Routhier, et al.	:	
Application No.: 10/409,073	:	ON PETITION
Filed: April 9, 2003	:	
Attorney Docket No.: 87367.0600	:	

This is a decision on the petition, filed May 22, 2009, under 37 CFR 1.313(c)(2) to withdraw the above-identified application from issue after payment of the issue fee.

The petition is not signed by an attorney or agent of record. However, in accordance with 37 CFR 1.34(a), the signature of James Anglehart appearing on the correspondence shall constitute a representation to the United States Patent and Trademark Office that he is authorized to represent the particular party on whose behalf he acts.

The petition is **GRANTED**.

The above-identified application is withdrawn from issue for consideration of a submission under 37 CFR 1.114 (request for continued examination). See 37 CFR 1.313(c)(2).

Petitioner is advised that the issue fee paid on March 12, 2009, cannot be refunded. If, however, this application is again allowed, petitioner may request that it be applied towards the issue fee required by the new Notice of Allowance.[1]

Telephone inquiries relating to this decision should be directed to the undersigned at (571) 272-3204.

The application is being referred to Technology Center AU 2621 for further processing of the request for continued examination under 37 CFR 1.114 and for consideration of the concurrently filed Information Disclosure Statement (IDS).

/SDB/

Sherry D. Brinkley
Petitions Examiner
Office of Petitions

[1] *The request to apply the issue fee to the new Notice may be satisfied by completing and returning the new Part B – Fee(s) Transmittal Form (along with any balance due at the time of submission). Petitioner is advised that the Issue Fee Transmittal Form* ***must*** *be completed and timely submitted to avoid abandonment of the application.*

UNITED STATES PATENT AND TRADEMARK OFFICE

UNITED STATES DEPARTMENT OF COMMERCE
United States Patent and Trademark Office
Address: COMMISSIONER FOR PATENTS
P.O. Box 1450
Alexandria, Virginia 22313-1450
www.uspto.gov

YOUNG & THOMPSON
209 Madison Street
Suite 500
Alexandria, VA 22314

Mail Date: 04/20/2010

Applicant	: Mao Masuhiro	: DECISION ON REQUEST FOR
Patent Number	: 7580402	: RECALCULATION of PATENT
Issue Date	: 08/25/2009	: TERM ADJUSTMENT IN VIEW
Appliction No	: 10/409,139	: OF WYETH AND NOTICE OF INTENT TO
Filed	: 04/09/2003	: ISSUE CERTIFICATE OF CORRECTION
		:

The Request for Recalculation is **GRANTED** to the extent indicated.

The patent term adjustment has been determined to be **1645** days. The USPTO will *sua sponte* issue a certificate of correction reflecting the amount of PTA days determined by the recalculation.

Prior to the issuance of the certificate of correction, the USPTO will afford patentee an opportunity to be heard and request reconsideration. Accordingly, patentee has **one month or thirty (30) days**, whichever is longer, to file a request for reconsideration of this patent term adjustment calculation. See 35 U.S.C. 154(b)(3)(B)(ii) and 37 CFR 1.322(a)(4). No extensions of time will be granted under 37 CFR 1.136.

Patentee should use document code PET.OP if electronically filing a request for reconsideration of this patent term adjustment calculation. The patentee must also include the information required by 37 CFR 1.705(b)(2) and the fee required by 37 CFR 1.18(e). If patentee does not file a timely request for reconsideration of this patent term adjustment calculation including the information required by 37 CFR 1.705(b)(2) and the fee required by 37 CFR 1.18(e), the USPTO will issue a certificate of correction reflecting the PTA determination noted above.

Patentee should be aware that in order to preserve the right to review in the United States District Court for the District of Columbia of the USPTO patent term adjustment determination, patentee must ensure that he or she also take the steps required under 35 U.S.C. 154(b)(4)(A) in a timely manner. Nothing in the request for recalculation should be construed as providing an alternative time frame for commencing a civil action under 35 U.S.C. 154(b)(4)(A).

Any questions concerning this decision should be directed to the Office of Patent Legal Administration at 571-272-7702.

UNITED STATES PATENT AND TRADEMARK OFFICE

Commissioner for Patents
United States Patent and Trademark Office
P.O. Box 1450
Alexandria, VA 22313-1450
www.uspto.gov

GREENBLUM & BERNSTEIN, P.L.C.
1950 ROLAND CLARKE PLACE
RESTON VA 20191

COPY MAILED
FEB 22 2010

COPY MAILED
FEB 22 2010

In re Patent No. 7,584,295	:	
Issue Date: September 1, 2009	:	
Application No. 10/409,194	:	DECISION ON PETITION
Filed: April 9, 2003	:	
Attorney Docket No. **P23107**	:	

This is a decision on the petition filed, November 23, 2009, which is being treated as a request under 37 CFR 3.81(b)[1] to correct the assignee's name on the front page the above-identified patent by way of a certificate of correction.

The request is **GRANTED**.

Petitioner states that the correct assignee's name is "**Panasonic Communications Co., Ltd., Fukuoka (JP)**." Petitioner further states that the incorrect assignee's name was included on the Fee(s) Transmittal form PTOL-85(b) at the time of payment of the issue fee. Accordingly, petitioner requests that a certificate of correction be issued to reflect the correct assignee on the front page of the Letters Patent.

37 CFR 3.81(b), effective June 25, 2004, reads:

> *After payment of the issue fee:* Any request for issuance of an application in the name of the assignee submitted after the date of payment of the issue fee, and any request for a patent to be corrected to state the name of the assignee, must state that the assignment was submitted for recordation as set forth in § 3.11 before issuance of the patent, and must include a request for a certificate of correction under § 1.323 of this chapter (accompanied by the fee set forth in § 1.20(a) and the processing fee set forth in § 1.17(i) of this chapter

[1] *See* MPEP 1309, subsection II; and Official Gazette of June 22, 2004.

The request was accompanied by a certificate of correction (and fee) as required by 3.81(b). Further, Office assignment records reflect that "**Panasonic Communications Co., Ltd., Fukuoka (JP)**" is the assignee of record. Accordingly, as the request complies with the provisions of 37 CFR 3.81(b), it would be appropriate for a certificate of correction to be processed.

Inquiries concerning this decision should be directed to Terri Johnson at (571) 272-2991. Any questions concerning the issuance of a certificate of correction should be directed to the Certificates of Correction Branch at (571) 272-4200.

This matter is being referred to the Certificates of Correction Branch for processing of a certificate of correction.

Terri Johnson

Terri Johnson
Petitions Examiner
Office of Petitions

SPE RESPONSE FOR CERTIFICATE OF CORRECTION

Paper No.: 1205

DATE : Dec. 6, 2005

TO SPE OF : ART UNIT 1711 (*James Seidleck*)

SUBJECT : Request for Certificate of Correction on Patent No.: 6,930,148

A response is requested with respect to the accompanying request for a certificate of correction.

Please complete this form and return with file, within **7** days to:
Palm location **7580, Certificates of Correction Branch – South Tower – 9A22**
If response is for an IFW, **return to employee (named below) via PUBSCofC Team in MADRAS.**
With respect to the change(s) requested, correcting Office and/or Applicant's errors, should the patent read as shown in the certificate of correction (COCIN)? No new matter should be introduced, nor should the scope or meaning of the claims be changed.
Please see the claim dependency. Your denial or approval decision is needed below.

sp STACY POWELL

Thank You For Your Assistance

Certificates of Correction Branch
Tel. No. 703-308-9390 x120

The request for issuing the above-identified correction(s) is hereby:
Note your decision on the appropriate box.

- ☒ **Approved** — **All** changes apply.
- ☐ **Approved in Part** — Specify below which changes **do not** apply.
- ☐ **Denied** — State the reasons for denial below.

Comments:

Enter entire request,

1711

SPE **Art Unit**

UNITED STATES PATENT AND TRADEMARK OFFICE

COMMISSIONER FOR PATENTS
UNITED STATES PATENT AND TRADEMARK OFFICE
P.O. BOX 1450
ALEXANDRIA, VA 22313-1450
www.uspto.gov

SEYFARTH SHAW LLP
131 S. DEARBORN ST., SUITE 2400
CHICAGO, IL 60603-5803

COPY MAILED

JAN 23 2008

OFFICE OF PETITIONS

In re Application of
Wen-Kuei Hsieh
Application No. 10/409,226
Filed: April 8, 2003
Attorney Docket No. TJK/363

ON PETITION

This is a decision in response to the petition, filed January 22, 2007, to revive the above-identified application under the provisions of 37 CFR 1.137(b).

The petition is **GRANTED**.

The application became abandoned for a failure to reply in a timely manner to a non-final Office action mailed October 27, 2005. A Notice of Abandonment was mailed on August 8, 2006. In response, on January 22, 2007, the present petition was filed.

The petition satisfies the conditions for revival pursuant to the provisions of 37 CFR 1.137(b) in that petitioner has supplied (1) the reply in the form of an amendment; (2) the petition fee of $1,500; and (3) an adequate statement of unintentional delay.

The application is being referred to Technology Center AU 1765 for consideration of the amendment filed January 22, 2007.

Telephone inquiries concerning this decision should be directed to the undersigned at (571) 272-3204. Inquiries relating to further prosecution should be directed to the Technology Center.

Sherry D. Brinkley
Petitions Examiner
Office of Petitions

UNITED STATES PATENT AND TRADEMARK OFFICE

Commissioner for Patents
United States Patent and Trademark Office
P.O. Box 1450
Alexandria, VA 22313-1450
www.uspto.gov

PIONEER HI-BRED INTERNATIONAL, INC.
7250 N.W. 62ND AVENUE
P.O. BOX 552
JOHNSTON, IA 50131-0552

COPY MAILED

MAR 05 2007

OFFICE OF PETITIONS

In re Application of	:
Hatfield, et al.	: DECISION NOTING JOINDER
Application No. 11/409,227	: OF INVENTOR AND PETITION
Filed: April 21, 2006	: UNDER 37 CFR 1.47(a) MOOT
Atty. Dkt. No.: 2276	:
For: HIGH PECTIN ALFALFA	:

This decision is in response to the renewed petition under 37 CFR 1.47(a) filed August 21, 2006.

The petition is **DISMISSED AS MOOT**.

In view of the joinder of the inventor, further consideration under § 1.47(a) is not necessary. This application does not have any Rule 1.47 status and no such status should appear on the record for this file. This application need not be returned to this Office for any further consideration under 37 CFR 1.47(a).

This application is being referred to the Office of Initial Patent Examination for further processing.

Telephone inquiries related to this decision may be directed to the undersigned at (571) 272-3205.

Alesia M. Brown
Petitions Attorney
Office of Petitions

UNITED STATES PATENT AND TRADEMARK OFFICE

Commissioner for Patents
United States Patent and Trademark Office
P.O. Box 1450
Alexandria, VA 22313-1450
www.uspto.gov

MICHAEL BEST & FRIEDRICH LLC
401 NORTH MICHIGAN AVENUE
SUITE 1900
CHICAGO IL 60611-4212

COPY MAILED

OCT 2 0 2005

OFFICE OF PETITIONS

In re Application of	:	
Torrens-Jover et al.	:	
Application No. 10/409,235	:	ON PETITION
Filed: April 8, 2003	:	
Attorney Docket No. 201474-9003	:	

This is a decision on the petition under 37 C.F.R. § 1.137(b), filed September 27, 2005, to revive the above-identified application.

The petition is **GRANTED.**

This application became abandoned for failure to timely reply to the final Office action mailed February 11, 2005. A three-month extension of time under the provisions of 37 CFR 1.136(a) was obtained. Accordingly, this application became abandoned on August 12, 2005. A Notice of Abandonment was mailed September 9, 2005.

The petition satisfies the conditions for revival pursuant to the provisions of 37 CFR 1.137(b) in that (1) the reply in the form of a Request for Continued Examination (RCE) and a Preliminary Amendment; (2) the petition fee and RCE fee; and (3) the required statement of unintentional delay have been received. Accordingly, the response has been accepted as having been unintentionally delayed.

This matter is being referred to Technology Center 1600 for processing of the Request for Continued Examination under 37 CFR 1.114 filed with the instant petition.

Telephone inquiries regarding this decision should be directed to the undersigned at (571) 272-3282.

Liana Chase
Petitions Examiner
Office of Petitions

UNITED STATES PATENT AND TRADEMARK OFFICE

Commissioner for Patents
United States Patent and Trademark Office
P.O. Box 1450
Alexandria, VA 22313-1450
www.uspto.gov

PRO-TECHTOR INTERNATIONAL SERVICES
20775 NORADA CT.
SARATOGA CA 95070

COPY MAILED

SEP 10 2007

OFFICE OF PETITIONS

In re Application of :
Chiu Nan Wang :
Application No. 10/409,275 : ON PETITION
Filed: 04/07/2003 :
Attorney Docket No. 1901023 :

This is a decision on the petition under the unintentional provisions of 37 CFR 1.137(b), filed March 16, 2007, to revive the above-identified application.

The petition is **GRANTED**.

The application became abandoned for failure to timely file a reply within the meaning of 37 CFR 1.113 to the final Office action of March 7, 2006. The proposed reply required for consideration of a petition to revive must be a Notice of Appeal (and appeal fee required by 37 CFR 41.20(b)(2), an amendment that *prima facie* places the application in condition for allowance, a Request for Continued Examination and submission (37 CFR 1.114), or the filing of a continuing application under 37 CFR 1.53(b). See MPEP 711.03(c)(III)(A)(2). No extensions of time pursuant to the provisions of 37 CFR 1.136(a) were obtained. Accordingly, the application became abandoned on June 8, 2006. A Notice of Abandonment was mailed on October 26, 2006.

The petition satisfies the requirements of 37 CFR 1.137(b) in that petitioner has supplied (1) the reply in the form of a Request for Continued Examination (RCE), the RCE fee and the submission required by 37 CFR 1.114; (2) the petition fee; and (3) an adequate statement of unintentional delay.

37 CFR 1.137(b)(3) requires a statement that "the entire delay in filing the required reply from the due date for the reply until the filing of a grantable petition pursuant to this paragraph was unintentional" be submitted. However, the statement presented will be accepted and construed as the statement required by 37 CFR 1.137(b)(3). Petitioner must notify the Office if this is not a correct interpretation of the statement contained in the present petition.

Telephone inquiries concerning this decision should be directed to the undersigned at (571) 272-3211.

This application is being referred to Technology Center AU 3652 for processing of the RCE and for appropriate action by the Examiner in the normal course of business on the amendment submitted in accordance with 37 CFR 1.114.

C. T. Donnell

Christina Tartera Donnell
Senior Petitions Attorney
Office of Petitions

UNITED STATES PATENT AND TRADEMARK OFFICE

Commissioner for Patents
United States Patent and Trademark Office
P.O. Box 1450
Alexandria, VA 22313-1450
www.uspto.gov

PRO-TECHTOR INTERNATIONAL SERVICES
20775 NORADA CT.
SARATOGA, CA 95070

COPY MAILED

NOV 19 2008

OFFICE OF PETITIONS

In re Application of	:	
Chiu Nan Wang	:	
Application No. 10/409,275	:	ON PETITION
Filed: April 7, 2003	:	
Attorney Docket No. 191023	:	

This is a decision on the petition under 37 CFR 1.137(b), filed September 25, 2008, to revive the above-identified application.

As authorized, the petition fee of $770 has been charged to petitioner's deposit account.

The petition satisfies the requirements of 37 CFR 1.137(b) in that petitioner has supplied (1) the reply in the form of a signed amendment; (2) the petition fee of $770; and (3) a proper statement of unintentional delay. Therefore, the petition is **GRANTED**.

This application file is being referred to Technology Center Art Unit 3652 for appropriate action by the Examiner in the normal course of business on the amendment filed with the instant petition.

Telephone inquiries concerning this decision should be directed to the undersigned at (571) 272-3226.

Andrea Smith
Petitions Examiner
Office of Petitions

UNITED STATES PATENT AND TRADEMARK OFFICE

COMMISSIONER FOR PATENTS
UNITED STATES PATENT AND TRADEMARK OFFICE
P.O. BOX 1450
ALEXANDRIA, VA 22313-1450
www.uspto.gov

Morrison & Foerster, LLP
425 Market Street
San Francisco, CA 94105-2482

COPY MAILED

SEP 30 2009

OFFICE OF PETITIONS

In re Application of	:	
Martin Beale	:	
Application No. 10/409,281	:	DECISION ON PETITION
Filed: April 8, 2003	:	TO WITHDRAW
Attorney Docket No. 562492002200	:	FROM RECORD
	:	

This is a decision on the Request to Withdraw as attorney or agent of record under 37 C.F.R. § 1.36(b), filed August 31, 2009.

The request is **NOT APPROVED.**

A grantable request to withdraw as attorney/agent of record must be signed by every attorney/agent seeking to withdraw or contain a clear indication that one attorney is signing on behalf of another/others. The Office requires the practitioner(s) requesting withdrawal to certify that he, she, or they have: (1) given reasonable notice to the client, prior to the expiration of the response period, that the practitioner(s) intends to withdraw from employment; (2) delivered to the client or a duly authorized representative of the client all papers and property (including funds) to which the client is entitled; and (3) notified the client of any responses that may be due and the time frame within which the client must respond, pursuant 37 CFR 10.40(c).

The request cannot be approved because there is no forwarding address for future correspondence.

All future communications from the Office will continue to be directed to the above-listed address until otherwise notified by applicant.

Telephone inquiries concerning this decision should be directed to the undersigned at 571-272-6735.

/Kimberly A. Inabinet/

Kimberly Inabinet
Petitions Examiner
Office of Petitions

SPE RESPONSE FOR CERTIFICATE OF CORRECTION

DATE : 3/19/08

Paper No.: ____

TO SPE OF : ART UNIT 2611

SUBJECT : Request for Certificate of Correction for Appl. No.: 10/409298 Patent No: 7248653 B2

A response is requested with respect to a request for a certificate of correction.

With respect to the change(s) requested to correct Office and/or Applicant's errors, should the patent read as shown in the certificate of correction attached herewith or the COCIN document(s), in IFW images for the above-identified patented application? No new matter should be introduced, nor should the scope or meaning of the claims be changed.

If the response is for an IFW, within 7 days, please complete and forward the response, to the employee (named below) via scanning into application images, using document code **COCX**.

If the response is for a paper file wrapper, please complete the response and forward the response with the paper file wrapper, to the employee (named below), within 7 days, to:

Certificates of Correction Branch (CofC)
South Tower - 9A22
Palm Location 7580

VIRGINIA TOLBERT
Certificates of Correction Branch
703-308-9390 ext. 113

Thank You For Your Assistance

The request for issuing the above-identified correction(s) is hereby:
Note your decision on the appropriate box.

- ☒ **Approved** — All changes apply.
- ☐ **Approved in Part** — Specify below which changes **do not** apply.
- ☐ **Denied** — State the reasons for denial below.

Comments: The corrections are needed in order to correct typographic errors.

Christopher V
SPE

2611
Art Unit

UNITED STATES PATENT AND TRADEMARK OFFICE

Commissioner for Patents
United States Patent and Trademark Office
P.O. Box 1450
Alexandria, VA 22313-1450
www.uspto.gov

LESAVICH HIGH-TECH LAW GROUP, P.C.
SUITE 325
39 S. LASALLE STREET
CHICAGO IL 60603

COPY MAILED

SEP 17 2007

OFFICE OF PETITIONS

In re Application of

MITCHELL, Robert E.
Application No. 10/409,367
Filed: April 07, 2003
Attorney Docket No. **03,134**

DECISION ON PETITION
TO WITHDRAW
FROM RECORD

This is a decision on the Request to Withdraw as attorney or agent of record under 37 C.F.R. § 1.36(b), filed December 26, 2006.

The request is **APPROVED**.

A grantable request to withdraw as attorney/agent of record must be signed by every attorney/agent seeking to withdraw or contain a clear indication that one attorney is signing on behalf of another/others. A request to withdraw will not be approved unless at least 30 (thirty) days would remain between the date of approval and the later of the expiration date of a time to file a response or the expiration date of the maximum time period which can be extended under 37 C.F.R. § 1.136(a).

The request was signed by Stephen Lesavich on behalf of all attorneys of record who are associated. All attorneys/agents associated have been withdrawn. Applicant is reminded that there is no attorney of record at this time.

The request to change the correspondence of record is not acceptable as the requested correspondence address is not that of: (1) the first named signing inventor; or (2) an intervening assignee of the entire interest under 37 C.F.R 3.71. All future communications from the Office will be directed to the first named signing inventor at the first copied address below until otherwise properly notified by the applicant.

There is an outstanding Office action mailed July 27, 2007 that requires a reply from the applicant.

Telephone inquiries concerning this decision should be directed to Tredelle Jackson at 571-272-2783.

Monica A. Graves
Petitions Examiner
Office of Petitions

cc: **ROBERT MITCHELL**
F.A.C.E. TRADING INC.
5330 50TH STREET
KENOSHA, WI 53144

OCT 12 2004

UNITED STATES PATENT AND TRADEMARK OFFICE

Commissioner for Patents
United States Patent and Trademark Office
P.O. Box 1450
Alexandria, VA 22313-1450
www.uspto.gov

MCI, INC.
TECHNOLOGY LAW DEPARTMENT
1133 19TH STREET NW, 10TH FLOOR
WASHINGTON DC 20036

COPY MAILED

OCT 0 7 2004

OFFICE OF PETITIONS

#18

In re Application of
Carol Devine et al
Application No. 10/409,375
Filed: April 8, 2003
Attorney Docket No. COS97100C1

ON PETITION

This is a decision on the petition, filed October 4, 2004, under 37 CFR 1.313(c)(2) to withdraw the above-identified application from issue after payment of the issue fee.

The petition is **GRANTED**.

The above-identified application is withdrawn from issue for consideration of a submission under 37 CFR 1.114 (request for continued examination). See 37 CFR 1.313(c)(2).

Petitioner is advised that the issue fee paid on April 29, 2004 in the above-identified application cannot be refunded. If, however, the above-identified application is again allowed, petitioner may request that it be applied towards the issue fee required by the new Notice of Allowance.[1]

Telephone inquiries should be directed to the undersigned at (703) 305-8859.

After receipt of the file in the Office of petitions, the file will be forwarded to Technology Center AU 2131 to consider the request for continued examination under 37 CFR 1.114.

Karen Creasy

Karen Creasy
Petitions Examiner
Office of Petitions
Office of the Deputy Commissioner
for Patent Examination Policy

---

[1] The request to apply the issue fee to the new Notice may be satisfied by completing and returning the new Issue Fee Transmittal Form PTOL-85(b), which includes the following language thereon: "Commissioner for Patents is requested to apply the Issue Fee and Publication Fee (if any) or re-apply any previously paid issue fee to the application identified above." Petitioner is advised that, whether a fee is indicated as being due or not, the Issue Fee Transmittal Form **must** be completed and timely submitted to avoid abandonment. Note the language in bold text on the first page of the Notice of Allowance and Fee(s) Due (PTOL-85).

UNITED STATES PATENT AND TRADEMARK OFFICE

UNITED STATES DEPARTMENT OF COMMERCE
United States Patent and Trademark Office
Address: COMMISSIONER FOR PATENTS
P.O. Box 1450
Alexandria, Virginia 22313-1450
www.uspto.gov

APPLICATION NO.	ISSUE DATE	PATENT NO.	ATTORNEY DOCKET NO.	CONFIRMATION NO.
10/409,375	10/19/2004	6807637	COS97100C1	9519

25537 7590 09/30/2004

MCI, INC
TECHNOLOGY LAW DEPARTMENT
1133 19TH STREET NW, 10TH FLOOR
WASHINGTON, DC 20036

ISSUE NOTIFICATION

The projected patent number and issue date are specified above.

Determination of Patent Term Adjustment under 35 U.S.C. 154 (b)
(application filed on or after May 29, 2000)

The Patent Term Adjustment is 0 day(s). Any patent to issue from the above-identified application will include an indication of the adjustment on the front page.

If a Continued Prosecution Application (CPA) was filed in the above-identified application, the filing date that determines Patent Term Adjustment is the filing date of the most recent CPA.

Applicant will be able to obtain more detailed information by accessing the Patent Application Information Retrieval (PAIR) WEB site (http://pair.uspto.gov).

Any questions regarding the Patent Term Extension or Adjustment determination should be directed to the Office of Patent Legal Administration at (703) 305-1383. Questions relating to issue and publication fee payments should be directed to the Customer Service Center of the Office of Patent Publication at (703) 305-8283.

APPLICANT(s) (up to 18 names are included below, see PAIR WEB site http://pair.uspto.gov for additional applicants):

Carol Y. Devine, Colorado Springs, CO;
Gerald A. Shifrin, Monument, CO;
Richard W. Shoulberg, Manitou Springs, CO;

UNITED STATES PATENT AND TRADEMARK OFFICE

Commissioner for Patents
United States Patent and Trademark Office
P.O. Box 1450
Alexandria, VA 22313-1450
www.uspto.gov
DIW 01-05

DARBY & DARBY P.C.
P. O. BOX 5257
NEW YORK NY 10150-5257

COPY MAILED

JAN 07 2005

OFFICE OF PETITIONS

In re Patent No. 6,794,969	:	
Issued: 21 September, 2004	:	
Application No. 10/409,383	:	ON PETITION
Filed: 8 April, 2003	:	
Attorney Docket No. 2598/0M716US0	:	

This is a decision on the petition under 37 CFR 1.183 filed on 29 October, 2004, to waive the rules and accept the correction of the assignee on the front page of the above-identified patent.

The petition is **granted**.

The file is being referred to the Certificates of Correction Branch for issuance of the requested Certificate of Correction.

Telephone inquiries regarding this communication should be directed to the undersigned at 571.272.3231.

Douglas I. Wood
Senior Petitions Attorney
Office of Petitions

UNITED STATES PATENT AND TRADEMARK OFFICE

Commissioner for Patents
United States Patent and Trademark Office
P.O. Box 1450
Alexandria, VA 22313-1450
www.uspto.gov

JUN 14 2005

AKZO NOBEL PHARMA PATENT DEPARTMENT
21960 INTERVET LANE
P. O. BOX 318
MILLSBORO, DE 19966

In re Application of	:
Ronald Montelaro et al	:
Serial No.: 10/409,397	: PETITION DECISION
Filed: September 9, 2000	:
Attorney Docket No.: 2000.608	:

This is in response to the petition under 37 CFR 1.181, filed March 4, 2005, requesting withdrawal of abandonment based on timely filing of a reply.

A review of the file history shows that the examiner mailed a Final Office action to applicants on April 19, 2004, setting a three month shortened statutory period for reply. Upon failure to receive a reply the application was held abandoned by Notice of Abandonment mailed January 26, 2005. Applicants state and provide evidence that a Request for Continued Examination (RCE) and response to the Final Office action were filed on July 28, 2004, with authorization to charge the appropriate fees. For unknown reasons the papers were either not received or the papers were misplaced and not entered. (However, it is noted that the amendment contains the serial number of the parent application, 09/658,547.) Applicants provide copies of the submitted RCE papers and response with completed Certificate of Facsimile Transmission dated July 28, 2004, which will be entered. In view thereof, the Notice of Abandonment is withdrawn and the application restored to pending status with the mailing of this decision.

The petition is **GRANTED**.

The RCE papers will be entered and the Fee will be charged to applicants' Deposit Account No. 02-2334, as directed, and the application will be forwarded to the examiner for further action.

Should there be any questions about this decision please contact William R. Dixon, Jr., by letter addressed to Director, TC 1600, at the address listed above, or by telephone at 571-272-0519 or by facsimile sent to the general Office facsimile number, 571-273-8300.

Jasemine C. Chambers
Director, Technology Center 1600

UNITED STATES PATENT AND TRADEMARK OFFICE

Commissioner for Patents
United States Patent and Trademark Office
P.O. Box 1450
Alexandria, VA 22313-1450
www.uspto.gov

INTERVET INC.
PATENT DEPARTMENT
PO BOX 318
MILLSBORO, DE 19966-0318

COPY MAILED

MAR 19 2007

OFFICE OF PETITIONS

In re Application of

Montelaro, et al.

Application No. 10/409,397

Filed: April 7, 2003

Attorney Docket No. 2000.608 US D3.

DECISION ON PETITION

This is a decision on the petition under 37 CFR 1.137(b), filed October 26, 2006, to revive the above-identified application.

The petition is **GRANTED**.

The above-cited application became abandoned for failure to reply in a timely manner to the non-final Office action mailed December 29, 2005, which set a shortened statutory period for reply of three (3) months. No extensions of time were obtained within the allowable period. Accordingly, the application became abandoned on March 20, 2006. A Notice of Abandonment was mailed on September 26, 2006.

The amendment filed October 26, 2006, is noted and made of record.

It is not apparent whether the person signing the statement of unintentional delay was in a position to have firsthand or direct knowledge of the facts and circumstances of the delay at issue. Nevertheless, such statement is being treated as having been made as the result of a reasonable inquiry into the facts and circumstances of such delay. See 37 CFR 10.18(b) and Changes to Patent Practice and Procedure; Final Rule Notice, 62 Fed. Reg. 53131, 53178 (October 10, 1997), 1203 Off. Gaz. Pat. Office 63, 103 (October 21, 1997). In the event that such an inquiry has not been made, petitioner must make such an inquiry. If such inquiry results in the discovery that it is not correct that the entire delay in filing the required reply from the due date for the reply until the filing of a grantable petition pursuant to 37 CFR 1.137(b) was unintentional, petitioner must notify the Office.

There is no indication that the person signing the instant petition was ever given a power of attorney or authorization of agent to prosecute the above-identified application. If the person signing the instant petition desires to receive future correspondence regarding this application, the appropriate power of attorney or authorization of agent must be submitted. While a courtesy copy of this decision is being

mailed to the person signing the instant petition, all future correspondence will be directed to the address of currently of record until such time as appropriate instructions are received to the contrary.

The application is being forwarded to Technology Center 1600, GAU 1648 for further processing.

Telephone inquiries concerning this decision should be directed to the undersigned at (571) 272-3222.

Kenya A. McLaughlin
Petitions Attorney
Office of Petitions

Cc:
Daniel J. Morath, Ph.D.
PO Box 2550
Salt Lake City, UT 84110

UNITED STATES PATENT AND TRADEMARK OFFICE

COMMISSIONER FOR PATENTS
UNITED STATES PATENT AND TRADEMARK OFFICE
P.O. BOX 1450
ALEXANDRIA, VA 22313-1450
www.uspto.gov

Paper No. 5

Robert E. Rosenthal, Esquire
Duane Morris LLP
One Liberty Place
Philadelphia PA 19103

COPY MAILED

SEP 1 1 2003

OFFICE OF PETITIONS

In re Application of
Chong et al.
Application No. 10/409,415
Filed: April 8, 2003
Attorney Docket No. R0288-00005
For: METHOD AND SYSTEM FOR PROBLEM DETERMINATION IN DISTRIBUTED ENTERPRISE APPLICATIONS

ON PETITION

This is in response to the petition under 37 CFR 1.47(a), filed Monday, August 11, 2003. Petitioner obtained a four-month extension of time to reply. Therefore, the petition is timely filed.

The petition is granted.

Petitioner has shown that the non-signing inventors have refused to join in the filing of the above-identified application after having been presented with the application papers. Specifically, the statement of facts of Joseph Chan establishes that the inventors were mailed the application papers, including the specification, claims and drawings, but failed to respond to the request that they sign the declaration.

The above-identified application and papers have been reviewed and found in compliance with 37 CFR 1.47(a). This application is hereby accorded Rule 1.47(a) status.

As provided in Rule 1.47(c), this Office will forward notice of this application's filing to the non-signing inventor at the address given in the present petition. Notice of the filing of this application will also be published in the Official Gazette.

The application file is being forwarded to the Office of Initial Patent Examination for further processing.

Telephone inquiries regarding this decision should be directed to the undersigned at (703) 306-5589.

Christina Tartera Donnell

Christina Tartera Donnell
Senior Petitions Attorney
Office of Petitions

UNITED STATES PATENT AND TRADEMARK OFFICE

COMMISSIONER FOR PATENTS
UNITED STATES PATENT AND TRADEMARK OFFICE
P.O. BOX 1450
ALEXANDRIA, VA 22313-1450
www.uspto.gov

Raymond Chow
143 Minerva Way
San Ramon, CA 94583

COPY MAILED

SEP 1 1 2003

OFFICE OF PETITIONS

In re Application of :
Chong et al. :
Application No. 10/409,415 :
Filed: April 8, 2003 :
Attorney Docket No. R0288-00005 :
For: METHOD AND SYSTEM FOR PROBLEM :
DETERMINATION IN DISTRIBUTED :
ENTERPRISE APPLICATIONS :

LETTER

Dear Mr. Chow:

You are named as a joint inventor in the above-identified United States patent application filed under the provisions of 35 U.S.C. 116 (United States Code) and 37 CFR 1.47(a), Rules of Practice in Patent Cases. Should a patent be granted on the application you will be designated therein as a joint inventor.

As a named inventor you are entitled to inspect any paper in the file wrapper of the application, order copies of all or any part thereof (at a prepaid cost per 37 CFR 1.19) or make your position of record in the application. Alternatively, you may arrange to do any of the preceding through a registered patent attorney or agent presenting written authorization from you. If you care to join the application, counsel of record (see below) would presumably assist you. Joining in the application would entail the filing of an appropriate oath or declaration by you pursuant to 37 CFR 1.63.

Requests for information regarding your application should be directed to the File Information Unit at (703) 308-2733. Information regarding how to pay for and order a copy of the application, or a specific paper in the application, should be directed to Certification Division at (703) 308-9726 or 1-800-972-6382 (outside the Washington D.C. area).

Christina Tartera Donnell

Christina Tartera Donnell
Senior Petitions Attorney
Office of Petitions

Robert E. Rosenthal, Esquire
Duane Morris LLP
One Liberty Place
Philadelphia PA 19103

UNITED STATES PATENT AND TRADEMARK OFFICE

COMMISSIONER FOR PATENTS
UNITED STATES PATENT AND TRADEMARK OFFICE
P.O. BOX 1450
ALEXANDRIA, VA 22313-1450
www.uspto.gov

Henry Tang
1751 Magnolia Way
Walnut Creek CA 94595

COPY MAILED

SEP 1 1 2003

OFFICE OF PETITIONS

In re Application of :
Chong et al. :
Application No. 10/409,415 : LETTER
Filed: April 8, 2003 :
Attorney Docket No. R0288-00005 :
For: METHOD AND SYSTEM FOR PROBLEM :
DETERMINATION IN DISTRIBUTED :
ENTERPRISE APPLICATIONS :

Dear Mr. Tang:

You are named as a joint inventor in the above-identified United States patent application filed under the provisions of 35 U.S.C. 116 (United States Code) and 37 CFR 1.47(a), Rules of Practice in Patent Cases. Should a patent be granted on the application you will be designated therein as a joint inventor.

As a named inventor you are entitled to inspect any paper in the file wrapper of the application, order copies of all or any part thereof (at a prepaid cost per 37 CFR 1.19) or make your position of record in the application. Alternatively, you may arrange to do any of the preceding through a registered patent attorney or agent presenting written authorization from you. If you care to join the application, counsel of record (see below) would presumably assist you. Joining in the application would entail the filing of an appropriate oath or declaration by you pursuant to 37 CFR 1.63.

Requests for information regarding your application should be directed to the File Information Unit at (703) 308-2733. Information regarding how to pay for and order a copy of the application, or a specific paper in the application, should be directed to Certification Division at (703) 308-9726 or 1-800-972-6382 (outside the Washington D.C. area).

Christina Tartera Donnell

Christina Tartera Donnell
Senior Petitions Attorney
Office of Petitions

Robert E. Rosenthal, Esquire
Duane Morris LLP
One Liberty Place
Philadelphia PA 19103

UNITED STATES PATENT AND TRADEMARK OFFICE

Commissioner for Patents
United States Patent and Trademark Office
P.O. Box 1450
Alexandria, VA 22313-1450
www.uspto.gov

OGILVY RENAULT LLP
1981 MCGILL COLLEGE AVENUE
SUITE 1600
MONTREAL QC H3A2Y-3 CA CANADA

COPY MAILED

JUN 1 2 2008

OFFICE OF PETITIONS

In re Application of	:	
Huard et al.	:	
Application No. 10/409475	:	DECISION ON PETITION
Filing or 371(c) Date: 04/09/2003	:	UNDER 37 CFR 1.78(a)(6)
Attorney Docket No. 12296-15US IC/lil	:	

This is a decision on the "Petition for an Unintentionally Delayed Benefit," filed March 3, 2008, for the benefit of priority to the prior-filed provisional applications set forth in the amendment filed October 26, 2007. The petition is properly treated under 37 CFR 1.78(a)(6).

The petition is **DISMISSED AS MOOT**.

The petition is accompanied by an amendment to the first sentence of the specification following the title to include a reference to the prior-filed provisional applications. While a reference to the prior-filed provisional applications was not included in an Application Data Sheet (ADS) or in the first sentence of the specification following the title as required by the rules, a reference, nevertheless, was made in the executed oath/declaration filed July 16, 2003.

Where a claim for priority under 37 CFR § 1.78(a)(6) is not included in the first sentence of the specification or in an ADS but does appear either in the oath or declaration or a transmittal letter filed with the application and the Office notes the claim for priority, no petition will be required to accept a late claim for priority. This is because the application would have been scheduled for publication on the basis of the information concerning the claim submitted elsewhere in the application within the time period set forth in 37 CFR § 1.78(a)(5)(ii). On the other hand, if the USPTO does not note the claim for priority to the prior-filed applications set forth in the oath or declaration or transmittal letter submitted with the application, a petition will be required to accept a late claim for priority under 37 CFR § 1.78(a)(6).[1] In the present case, the Office noted the claim for priority to the prior-filed provisional applications in the transmittal letter filed with the application, as shown by their inclusion on the filing receipt.

---

[1] *Note* MPEP 201.11 (III)(D) and 66 Federal Register 67087 at 67089 (Dec. 28, 2001), effective December 28, 2001.

In view of the above, the $1410.00 petition fee submitted is unnecessary and will be refunded to petitioner's deposit account in due course.

A corrected Filing Receipt, which includes the priority claim to the prior-filed provisional applications, accompanies this decision on petition.

Any inquiries concerning this decision may be directed to Derek Woods at (571) 272-3232. All other inquiries concerning either the examination procedures or status of the application should be directed to the Technology Center.

This application is being forwarded to Technology Center Art Unit 3714 for consideration by the examiner of the claim under 35 U.S.C. §119(e) for the benefit of priority to the prior-filed provisional applications.

Anthony Knight
Supervisor
Office of Petitions

ATTACHMENT: Corrected Filing Receipt

UNITED STATES PATENT AND TRADEMARK OFFICE

UNITED STATES DEPARTMENT OF COMMERCE
United States Patent and Trademark Office
Address: COMMISSIONER FOR PATENTS
P.O. Box 1450
Alexandria, Virginia 22313-1450
www.uspto.gov

APPLICATION NUMBER	FILING or 371(c) DATE	GRP ART UNIT	FIL FEE REC'D	ATTY.DOCKET.NO	TOT CLAIMS	IND CLAIMS
10/409,475	04/09/2003	3714	590	12296-15US IC/lil	19	2

CONFIRMATION NO. 5522

CORRECTED FILING RECEIPT

OC000000030324231

20988
OGILVY RENAULT LLP
1981 MCGILL COLLEGE AVENUE
SUITE 1600
MONTREAL, QC H3A2Y3
CANADA

Date Mailed: 06/05/2008

Receipt is acknowledged of this non-provisional patent application. The application will be taken up for examination in due course. Applicant will be notified as to the results of the examination. Any correspondence concerning the application must include the following identification information: the U.S. APPLICATION NUMBER, FILING DATE, NAME OF APPLICANT, and TITLE OF INVENTION. Fees transmitted by check or draft are subject to collection. Please verify the accuracy of the data presented on this receipt. **If an error is noted on this Filing Receipt, please submit a written request for a Filing Receipt Correction. Please provide a copy of this Filing Receipt with the changes noted thereon. If you received a "Notice to File Missing Parts" for this application, please submit any corrections to this Filing Receipt with your reply to the Notice. When the USPTO processes the reply to the Notice, the USPTO will generate another Filing Receipt incorporating the requested corrections**

Applicant(s)

Marcel Huard, St-Romuald, CANADA;
Real Berube, St-Jean-Chrysostome, CANADA;
Martin Benoit Gagnon, Levis, CANADA;
Guillermo Loria Santa Maria, San Jose, COSTA RICA;

Power of Attorney:
James Anglehart--38796

Domestic Priority data as claimed by applicant

This application is a CON of PCT/CA01/01468 10/22/2001
which claims benefit of 60/241,740 10/20/2000
and claims benefit of 60/296,486 06/08/2001
and claims benefit of 60/296,453 06/08/2001

Foreign Applications

If Required, Foreign Filing License Granted: 06/05/2003

The country code and number of your priority application, to be used for filing abroad under the Paris Convention, is **US 10/409,475**

Projected Publication Date: Not Applicable

Non-Publication Request: No

Early Publication Request: No
**** SMALL ENTITY ****

Title

Method and system for controlling and managing bets in a gaming environment

Preliminary Class

463

PROTECTING YOUR INVENTION OUTSIDE THE UNITED STATES

Since the rights granted by a U.S. patent extend only throughout the territory of the United States and have no effect in a foreign country, an inventor who wishes patent protection in another country must apply for a patent in a specific country or in regional patent offices. Applicants may wish to consider the filing of an international application under the Patent Cooperation Treaty (PCT). An international (PCT) application generally has the same effect as a regular national patent application in each PCT-member country. The PCT process **simplifies** the filing of patent applications on the same invention in member countries, but **does not result** in a grant of "an international patent" and does not eliminate the need of applicants to file additional documents and fees in countries where patent protection is desired.

Almost every country has its own patent law, and a person desiring a patent in a particular country must make an application for patent in that country in accordance with its particular laws. Since the laws of many countries differ in various respects from the patent law of the United States, applicants are advised to seek guidance from specific foreign countries to ensure that patent rights are not lost prematurely.

Applicants also are advised that in the case of inventions made in the United States, the Director of the USPTO must issue a license before applicants can apply for a patent in a foreign country. The filing of a U.S. patent application serves as a request for a foreign filing license. The application's filing receipt contains further information and guidance as to the status of applicant's license for foreign filing.

Applicants may wish to consult the USPTO booklet, "General Information Concerning Patents" (specifically, the section entitled "Treaties and Foreign Patents") for more information on timeframes and deadlines for filing foreign patent applications. The guide is available either by contacting the USPTO Contact Center at 800-786-9199, or it can be viewed on the USPTO website at http://www.uspto.gov/web/offices/pac/doc/general/index.html.

For information on preventing theft of your intellectual property (patents, trademarks and copyrights), you may wish to consult the U.S. Government website, http://www.stopfakes.gov. Part of a Department of Commerce initiative, this website includes self-help "toolkits" giving innovators guidance on how to protect intellectual property in specific countries such as China, Korea and Mexico. For questions regarding patent enforcement issues, applicants may call the U.S. Government hotline at 1-866-999-HALT (1-866-999-4158).

LICENSE FOR FOREIGN FILING UNDER

Title 35, United States Code, Section 184

Title 37, Code of Federal Regulations, 5.11 & 5.15

GRANTED

The applicant has been granted a license under 35 U.S.C. 184, if the phrase "IF REQUIRED, FOREIGN FILING LICENSE GRANTED" followed by a date appears on this form. Such licenses are issued in all applications where the conditions for issuance of a license have been met, regardless of whether or not a license may be required as

set forth in 37 CFR 5.15. The scope and limitations of this license are set forth in 37 CFR 5.15(a) unless an earlier license has been issued under 37 CFR 5.15(b). The license is subject to revocation upon written notification. The date indicated is the effective date of the license, unless an earlier license of similar scope has been granted under 37 CFR 5.13 or 5.14.

This license is to be retained by the licensee and may be used at any time on or after the effective date thereof unless it is revoked. This license is automatically transferred to any related applications(s) filed under 37 CFR 1.53(d). This license is not retroactive.

The grant of a license does not in any way lessen the responsibility of a licensee for the security of the subject matter as imposed by any Government contract or the provisions of existing laws relating to espionage and the national security or the export of technical data. Licensees should apprise themselves of current regulations especially with respect to certain countries, of other agencies, particularly the Office of Defense Trade Controls, Department of State (with respect to Arms, Munitions and Implements of War (22 CFR 121-128)); the Bureau of Industry and Security, Department of Commerce (15 CFR parts 730-774); the Office of Foreign AssetsControl, Department of Treasury (31 CFR Parts 500+) and the Department of Energy.

NOT GRANTED

No license under 35 U.S.C. 184 has been granted at this time, if the phrase "IF REQUIRED, FOREIGN FILING LICENSE GRANTED" DOES NOT appear on this form. Applicant may still petition for a license under 37 CFR 5.12, if a license is desired before the expiration of 6 months from the filing date of the application. If 6 months has lapsed from the filing date of this application and the licensee has not received any indication of a secrecy order under 35 U.S.C. 181, the licensee may foreign file the application pursuant to 37 CFR 5.15(b).

UNITED STATES PATENT AND TRADEMARK OFFICE

Commissioner for Patents
United States Patent and Trademark Office
P.O. Box 1450
Alexandria, VA 22313-1450
www.uspto.gov
DIW May-06

KENNETH GUY
KG INVENTIONS
1088 MAIN ST.
POTTER VALLEY CA 95469

COPY MAILED
MAY 0 5 2006
OFFICE OF PETITIONS

In re Application of	:	
Kenneth Wayne Guy	:	DECISION ON PETITION
Application No. 10/409,492	:	
Filed: 24 November, 2003	:	
For: SLIDE SECURE	:	

This is a decision on the petition to withdraw the holding of abandonment under 37 CFR 1.181, filed on 3 October, 2005.

The petition is **dismissed**.

Any request for reconsideration of this decision must be submitted within **TWO (2) MONTHS** from the mail date of this decision. Extensions of time under 37 CFR 1.136(a) are permitted. The reconsideration request should include a cover letter entitled "Renewed Petition to withdraw the holding of abandonment," or, as discussed below, "Renewed Petition under 37 CFR 1.137(b)."

The application became abandoned on 26 June, 2005, for failure to timely file a response to the Notice of Non-Compliant Amendment (37 CFR 1.121) mailed on 25 May, 2005, which set a one (1) month shortened period for reply. No extensions of the time for reply in accordance with 37 CFR 1.136(a) were obtained. Notice of Abandonment was mailed on 22 September, 2005.

Petitioner states "[I] apologize for not getting my patent application in respectable order." Petitioner further states that various personal events have delayed his prosecution of the application.

Petitioner has not shown that the delay was due to an error on the part of the Office or non-receipt of the Office action. As such, withdrawal of the holding of abandonment is not appropriate.

As the showing of record does not merit withdrawal of the holding of abandonment, the petition will be dismissed.

ALTERNATIVE VENUE

Petitioner may wish to consider filing a renewed petition under 37 CFR 1.137(b), which now provides that where the delay in reply was unintentional, a petition may be filed to revive an abandoned application or a lapsed patent pursuant to 37 CFR 1.137(b). A grantable petition pursuant to 37 CFR 1.137(b) must be accompanied by:

(1) the required reply, unless previously filed. In a nonprovisional application abandoned for failure to prosecute, the required reply may be met by the filing of a continuing application. In a nonprovisional utility or plant application filed on or after 8 June, 1995, and abandoned for failure to prosecute, the required reply may also be met by the filing of a request for continued examination in compliance with § 1.114. In an application or patent, abandoned or lapsed for failure to pay the issue fee or any portion thereof, the required reply must be the payment of the issue fee or any outstanding balance thereof.

(2) the petition fee as set forth in 37 CFR 1.17(m);

(3) a statement that the entire delay in filing the required reply from the due date for the reply until the filing of a grantable petition pursuant to 37 CFR 1.137(b) was unintentional. The Commissioner may required additional information where there is a question whether the delay was unintentional; and

(4) any terminal disclaimer (and fee as set forth in 37 CFR 1.20(d)) required pursuant to 37 CFR 1.137(c)).

The filing of a petition under the unintentional standard cannot be intentionally delayed and therefore should be filed promptly. A person seeking revival due to unintentional delay cannot make a statement that the delay was unintentional unless the entire delay, including the delay from the date it was discovered that the application was abandoned until the filing of the petition to revive under 37 CFR 1.137(b), was unintentional. A statement that the delay was unintentional is not appropriate if petitioner intentionally delayed the filing of a petition for revival under 37 CFR 1.137(b).

A copy of the form for filing a petition under 37 CFR 1.137(b) to revive an application unintentionally abandoned is enclosed herewith for petitioner's convenience.

Further correspondence with respect to this matter should be addressed as follows:

By mail: Mail Stop Petition
Commissioner for Patents
P.O. Box 1450
Alexandria, VA 22313-1450

By FAX: (571) 273-8300
Attn: Office of Petitions

By hand: Customer Service Window
Mail Stop Petition
Randolph Building
401 Dulany Street
Alexandria, VA 22314

Telephone inquiries concerning this matter may be directed to the undersigned at (571)272-3231.

DWood

Douglas I. Wood
Senior Petitions Attorney
Office of Petitions

Enclosure: Form PTO/SB/64
Privacy Act Statement

PTO/SB/64 (10-05)
Approved for use through 07/31/2006. OMB 0651-0031
U.S. Patent and Trademark Office; U.S. DEPARTMENT OF COMMERCE
Under the Paperwork Reduction Act of 1995, no persons are required to respond to a collection of information unless it displays a valid OMB control number.

PETITION FOR REVIVAL OF AN APPLICATION FOR PATENT ABANDONED UNINTENTIONALLY UNDER 37 CFR 1.137(b)

Docket Number (Optional)

First named inventor:

Application No.: Art Unit:

Filed: Examiner:

Title:

Attention: Office of Petitions
Mail Stop Petition
Commissioner for Patents
P.O. Box 1450
Alexandria, VA 22313-1450
FAX (571) 273-8300

NOTE: If information or assistance is needed in completing this form, please contact Petitions Information at (571) 272-3282.

The above-identified application became abandoned for failure to file a timely and proper reply to a notice or action by the United States Patent and Trademark Office. The date of abandonment is the day after the expiration date of the period set for reply in the office notice or action plus an extensions of time actually obtained.

APPLICANT HEREBY PETITIONS FOR REVIVAL OF THIS APPLICATION

NOTE: A grantable petition requires the following items:
(1) Petition fee;
(2) Reply and/or issue fee;
(3) Terminal disclaimer with disclaimer fee - required for all utility and plant applications filed before June 8, 1995; and for all design applications; and
(4) Statement that the entire delay was unintentional.

1. Petition fee

☐ Small entity-fee $ _____ (37 CFR 1.17(m)). Applicant claims small entity status. See 37 CFR 1.27.

☐ Other than small entity – fee $ _____ (37 CFR 1.17(m))

2. Reply and/or fee

A. The reply and/or fee to the above-noted Office action in the form of _____(identify type of reply):

☐ has been filed previously on _____.
☐ is enclosed herewith.

B. The issue fee and publication fee (if applicable) of $ _____.

☐ has been paid previously on _____.
☐ is enclosed herewith.

This collection of information is required by 37 CFR 1.137(b). The information is required to obtain or retain a benefit by the public which is to file (and by the USPTO to process) an application. Confidentiality is governed by 35 U.S.C. 122 and 37 CFR 1.11 and 1.14. This collection is estimated to take 1.0 hour to complete, including gathering, preparing, and submitting the completed application form to the USPTO. Time will vary depending upon the individual case. Any comments on the amount of time you require to complete this form and/or suggestions for reducing this burden, should be sent to the Chief Information Officer, U.S. Patent and Trademark Office, U.S. Department of Commerce, P.O. Box 1450, Alexandria, VA 22313-1450. DO NOT SEND FEES OR COMPLETED FORMS TO THIS ADDRESS. **SEND TO: Mail Stop Petition, Commissioner for Patents, P.O. Box 1450, Alexandria, VA 22313-1450.**

If you need assistance in completing the form, call 1-800-PTO-9199 and select option 2.

Under the Paperwork Reduction Act of 1995, no persons are required to respond to a collection of information unless it displays a valid OMB control number.

3. Terminal disclaimer with disclaimer fee

☐ Since this utility/plant application was filed on or after June 8, 1995, no terminal disclaimer is required.

☐ A terminal disclaimer (and disclaimer fee (37 CFR 1.20(d)) of $ _____ for a small entity or $ _____ for other than a small entity) disclaiming the required period of time is enclosed herewith (see PTO/SB/63).

4. STATEMENT: The entire delay in filing the required reply from the due date for the required reply until the filing of a grantable petition under 37 CFR 1.137(b) was unintentional. [NOTE: The United States Patent and Trademark Office may require additional information if there is a question as to whether either the abandonment or the delay in filing a petition under 37 CFR 1.137(b) was unintentional (MPEP 711.03(c), subsections (III)(C) and (D)).]

WARNING:

Petitioner/applicant is cautioned to avoid submitting personal information in documents filed in a patent application that may contribute to identity theft. Personal information such as social security numbers, bank account numbers, or credit card numbers (other than a check or credit card authorization form PTO-2038 submitted for payment purposes) is never required by the USPTO to support a petition or an application. If this type of personal information is included in documents submitted to the USPTO, petitioners/applicants should consider redacting such personal information from the documents before submitting them to the USPTO. Petitioner/applicant is advised that the record of a patent application is available to the public after publication of the application (unless a non-publication request in compliance with 37 CFR 1.213(a) is made in the application) or issuance of a patent. Furthermore, the record from an abandoned application may also be available to the public if the application is referenced in a published application or an issued patent (see 37 CFR 1.14). Checks and credit card authorization forms PTO-2038 submitted for payment purposes are not retained in the application file and therefore are not publicly available.

Signature	Date
Typed or printed name	Registration Number, if applicable
Address	Telephone Number
Address	

Enclosures:
- ☐ Fee Payment
- ☐ Reply
- ☐ Terminal Disclaimer Form
- ☐ Additional sheets containing statements establishing unintentional delay
- ☐ Other: _____

CERTIFICATE OF MAILING OR TRANSMISSION [37 CFR 1.8(a)]

I hereby certify that this correspondence is being:

☐ Deposited with the United States Postal Service on the date shown below with sufficient postage as first class mail in an envelope addressed to: Mail Stop Petition, Commissioner for Patents, P. O. Box 1450, Alexandria, VA 22313-1450.

☐ Transmitted by facsimile on the date shown below to the United States Patent and Trademark Office as (571) 273-8300.

Date	Signature
	Typed or printed name of person signing certificate

Privacy Act Statement

The **Privacy Act of 1974 (P.L. 93-579)** requires that you be given certain information in connection with your submission of the attached form related to a patent application or patent. Accordingly, pursuant to the requirements of the Act, please be advised that: (1) the general authority for the collection of this information is 35 U.S.C. 2(b)(2); (2) furnishing of the information solicited is voluntary; and (3) the principal purpose for which the information is used by the U.S. Patent and Trademark Office is to process and/or examine your submission related to a patent application or patent. If you do not furnish the requested information, the U.S. Patent and Trademark Office may not be able to process and/or examine your submission, which may result in termination of proceedings or abandonment of the application or expiration of the patent.

The information provided by you in this form will be subject to the following routine uses:

1. The information on this form will be treated confidentially to the extent allowed under the Freedom of Information Act (5 U.S.C. 552) and the Privacy Act (5 U.S.C 552a). Records from this system of records may be disclosed to the Department of Justice to determine whether disclosure of these records is required by the Freedom of Information Act.
2. A record from this system of records may be disclosed, as a routine use, in the course of presenting evidence to a court, magistrate, or administrative tribunal, including disclosures to opposing counsel in the course of settlement negotiations.
3. A record in this system of records may be disclosed, as a routine use, to a Member of Congress submitting a request involving an individual, to whom the record pertains, when the individual has requested assistance from the Member with respect to the subject matter of the record.
4. A record in this system of records may be disclosed, as a routine use, to a contractor of the Agency having need for the information in order to perform a contract. Recipients of information shall be required to comply with the requirements of the Privacy Act of 1974, as amended, pursuant to 5 U.S.C. 552a(m).
5. A record related to an International Application filed under the Patent Cooperation Treaty in this system of records may be disclosed, as a routine use, to the International Bureau of the World Intellectual Property Organization, pursuant to the Patent Cooperation Treaty.
6. A record in this system of records may be disclosed, as a routine use, to another federal agency for purposes of National Security review (35 U.S.C. 181) and for review pursuant to the Atomic Energy Act (42 U.S.C. 218(c)).
7. A record from this system of records may be disclosed, as a routine use, to the Administrator, General Services, or his/her designee, during an inspection of records conducted by GSA as part of that agency's responsibility to recommend improvements in records management practices and programs, under authority of 44 U.S.C. 2904 and 2906. Such disclosure shall be made in accordance with the GSA regulations governing inspection of records for this purpose, and any other relevant (*i.e.*, GSA or Commerce) directive. Such disclosure shall not be used to make determinations about individuals.
8. A record from this system of records may be disclosed, as a routine use, to the public after either publication of the application pursuant to 35 U.S.C. 122(b) or issuance of a patent pursuant to 35 U.S.C. 151. Further, a record may be disclosed, subject to the limitations of 37 CFR 1.14, as a routine use, to the public if the record was filed in an application which became abandoned or in which the proceedings were terminated and which application is referenced by either a published application, an application open to public inspection or an issued patent.
9. A record from this system of records may be disclosed, as a routine use, to a Federal, State, or local law enforcement agency, if the USPTO becomes aware of a violation or potential violation of law or regulation.

UNITED STATES PATENT AND TRADEMARK OFFICE

Commissioner for Patents
United States Patent and Trademark Office
P.O. Box 1450
Alexandria, VA 22313-1450
www.uspto.gov

STRIKER STRIKER & STENBY
103 EAST NECK ROAD
HUNTINGTON, NY 11743

COPY MAILED

MAR 2 3 2005

OFFICE OF PETITIONS

In re Patent No. 6,753,666	:	
Issue Date: June 22, 2004	:	
Application No. 10/409,522	:	ON PETITION
Filed: April 8, 2003	:	
Attorney Docket No. 2540	:	

This is a decision on the petition filed February 23, 2005, which is being treated as a petition under 37 CFR 3.81(b)[1] to accept the correction of the assignee on the front page of the above-identified patent.

The petition is GRANTED.

Telephone inquiries concerning this matter may be directed to Wan Laymon at (571) 272-3220. Any questions concerning the issuance of the Certificate of Correction should be directed to the Certificates of Correction Branch at (703) 305-8309.

This matter is being referred to the Certificates of Correction Branch for issuance of the requested Certificate of Correction.

Wan Laymon
Petitions Examiner
Office of Petitions
Office of the Deputy Commissioner
for Patent Examination Policy

[1] *See* Official Gazette of June 22, 2004

UNITED STATES PATENT AND TRADEMARK OFFICE

Commissioner for Patents
United States Patent and Trademark Office
P.O. Box 1450
Alexandria, VA 22313-1450
www.uspto.gov

MORRISON & FOERSTER, LLP
555 WEST FIFTH STREET
SUITE 3500
LOS ANGELES, CA 90013-1024

COPY MAILED

JUN 13 2008

OFFICE OF PETITIONS

In re Application of	:	
KNAPP, Tracey E.	:	
Application No. 10/409,527	:	DECISION ON PETITION
Filed: April 08, 2003	:	TO WITHDRAW
Attorney Docket No. **480102001300**	:	FROM RECORD
	:	

This is a decision on the Request to Withdraw as attorney or agent of record under 37 C.F.R. § 1.36(b), filed May 05, 2008.

The request is **NOT APPROVED** because it is moot.

A review of the file record indicates that the power of attorney to Morrison & Foerster, LLP has been revoked by the assignee of the patent application on June 03, 2008. Accordingly, the request to withdraw under 37 C.F.R. § 1.36(b) is moot.

All future communications from the Office will continue to be directed to the below-listed address until otherwise notified by applicant.

Telephone inquires concerning this decision should be directed to Michelle R. Eason at 571-272-4231.

Michelle R. Eason
Paralegal Specialist
Office of Petitions

cc: **RUTAN & TUCKER, LLP.**
611 ANTON BLVD
SUITE 1400
COSTA MESA, CA 92626

UNITED STATES PATENT
AND TRADEMARK OFFICE

Commissioner for Patents
United States Patent and Trademark Office
P.O. Box 1450
Alexandria, VA 22313-1450
www.uspto.g

Date Mailed: July 3, 2008
Patent No. :7,369,144 B2
Ser. No. :10/409530
Inventor(s) :Benoit Marchand, et.al.
Issued :November 13, 2007
Title: METHOD AND DEVICE FOR CORRECTING THE ROTATION OF A VIDEO DISPLAY

Re: Request for Certificate of Correction

Consideration has been given your request for the issuance of a certificate of correction for the above-identified patent under the provisions of Rule(s) 1.322 and/or 1.323.

Assignees' names and addresses (assignment data) printed in a patent, are based *solely* on information supplied in the appropriate space for identifying the assignment data, i.e., item 3 of the Issue Fee Transmittal Form PTOL-85B. Granting of a request under 37 CFR 3.81(b) is required to correct applicant's error providing ***incorrect or erroneous*** assignment data, *before* issuance of a Certificate of Correction, under 37 CFR 1.323 *(see Manual of Patent Examining Procedures (M.P.E.P) Chp.1400, sect. 1481).* This procedure is required *at any time after the issue fee is paid*, including after issuance of the patent.

In view of the foregoing, your request is hereby denied.

A request to correct the Assignee under 37 CFR 3.81(b) should include:

A. **the processing fee set forth in 37 CFR 1.117(h) (currently $130);**
B. a statement that the failure to include the correct assignee name on the PTOL-85B was inadvertent; and
C. a copy of the Notice of Recordation of Assignment Document, reflecting the reel and frame number where the assignment(s) is recorded and/or reflecting proof of *the date* the assignment was submitted for recordation.

In the Request, Applicant(s) may request that the file be forwarded to Certificates of Correction Branch, for issuance of a Certificate of Correction, if the Request is granted.

Any request under 37 CFR 3.81(b) should be directed to the following address or facsimile number:

By mail: Mail Stop PETITIONS
Commissioner for Patents
Post Office Box 1450
Alexandria, VA 22313-1450

By hand: Customer Service Window
Mail Stop Petitions
Randolph Building
401 Dulany Street
Alexandria, VA 22314

By fax: (571) 273-0025
ATTN: Office of Petitions

If a fee (currently $100) was previously submitted for consideration of a Request for Certificate of Correction, under CFR 1.323, to correct assignment data, no additional fee is required.

Magdalene Talley
For Mary F. Diggs, Supervisor
Decisions & Certificates
of Correction Branch
(703) 308-9390 ext. 116

Wolf, Greenfield & Sacks
Federal Reserve Plaza
600 Atlantic Avenue
Boston, MA 02210-2206

MD/mt

UNITED STATES PATENT
AND TRADEMARK OFFICE

Commissioner for Patents
United States Patent and Trademark Office
P.O. Box 1450
Alexandria, VA 22313-1450
www.uspto.g

Date Mailed: July 3, 2008
Patent No. :7,369,144 B2
Ser. No. :10/409530
Inventor(s) :Benoit Marchand, et al.
Issued :November 13, 2007
Title: METHOD AND DEVICE FOR CORRECTING THE ROTATION OF A VIDEO DISPLAY

Re: Request for Certificate of Correction

Consideration has been given your request for the issuance of a certificate of correction for the above-identified patent under the provisions of Rule(s) 1.322 and/or 1.323.

Assignees' names and addresses (assignment data) printed in a patent, are based *solely* on information supplied in the appropriate space for identifying the assignment data, i.e., item 3 of the Issue Fee Transmittal Form PTOL-85B. Granting of a request under 37 CFR 3.81(b) is required to correct applicant's error providing ***incorrect or erroneous*** assignment data, *before* issuance of a Certificate of Correction, under 37 CFR 1.323 *(see Manual of Patent Examining Procedures (M.P.E.P) Chp.1400, sect. 1481).* This procedure is required *at any time after the issue fee is paid*, including after issuance of the patent.

In view of the foregoing, your request is hereby denied.

A request to correct the Assignee under 37 CFR 3.81(b) should include:

A. **the processing fee set forth in 37 CFR 1.117(h) (currently $130);**
B. a statement that the failure to include the correct assignee name on the PTOL-85B was inadvertent; and
C. a copy of the Notice of Recordation of Assignment Document, reflecting the reel and frame number where the assignment(s) is recorded and/or reflecting proof of *the date* the assignment was submitted for recordation.

In the Request, Applicant(s) may request that the file be forwarded to Certificates of Correction Branch, for issuance of a Certificate of Correction, if the Request is granted.

Any request under 37 CFR 3.81(b) should be directed to the following address or facsimile number:

By mail: Mail Stop PETITIONS
Commissioner for Patents
Post Office Box 1450
Alexandria, VA 22313-1450

LEA

By hand: Customer Service Window
Mail Stop Petitions
Randolph Building
401 Dulany Street
Alexandria, VA 22314

By fax: (571) 273-0025
ATTN: Office of Petitions

If a fee (currently $100) was previously submitted for consideration of a Request for Certificate of Correction, under CFR 1.323, to correct assignment data, no additional fee is required.

Magdalene Talley
For Mary F. Diggs, Supervisor
Decisions & Certificates
of Correction Branch
(703) 308-9390 ext. 116

Wolf, Greenfield & Sacks
Federal Reserve Plaza
600 Atlantic Avenue
Boston, MA 02210-2206

MD/mt

31022 809970500
RECEIVED
Wolf, Greenfield & Sacks, P.C.
JUL - 7 2008
Docketed ✓ Already Docketed ____
Not Required ____
Initials 1st ____ 2nd ____
LEA

UNITED STATES PATENT AND TRADEMARK OFFICE

Commissioner for Patents
United States Patent and Trademark Office
P.O. Box 1450
Alexandria, VA 22313-1450
www.uspto.gov

WOLF GREENFIELD & SACKS, P.C.
600 ATLANTIC AVENUE
BOSTON, MA 02210-2206

COPY MAILED

OCT 21 2008

OFFICE OF PETITIONS

In re Patent No. 7,369,144	:	ON PETITION
Issue Date: May 6, 2008	:	
Application No. 10/409,530	:	
Filed: April 8, 2003	:	
Attorney Docket No. S01022.80997	:	

This is a decision on the petition filed July 10, 2008, which is being treated as a request under 37 CFR 3.81(b)[1] to correct the name of the assignee on the front page of the above-identified patent by way of a Certificate of Correction.

The request is **GRANTED**.

Telephone inquiries concerning this decision may be directed to the undersigned at (571) 272-3204. Inquiries regarding the issuance of a certificate of correction should be directed to the Certificate of Correction Branch at (571) 272-4200.

The Certificates of Correction Branch will be notified of this decision granting the petition under 37 CFR 3.81(b) and directing issuance of the requested Certificate of Correction.

Sherry D. Brinkley
Petitions Examiner
Office of Petitions

[1] *See* MPEP 1309, subsection II; and Official Gazette of June 22, 2004.

UNITED STATES PATENT AND TRADEMARK OFFICE

Commissioner for Patents
United States Patent and Trademark Office
P.O. Box 1450
Alexandria, VA 22313-1450
www.uspto.gov

Townsend and Townsend and Crew, LLP
Two Embarcadero Center
Eighth Floor
San Francisco, CA 94111-3834

COPY MAILED

AUG 20 2007

OFFICE OF PETITIONS

In re Application of	:	
Simon Eric Miani Barber	:	
Application No. 10/409,553	:	DECISION ON PETITION
Filed: April 7, 2003	:	TO WITHDRAW
Attorney Docket No. 021380-000100US	:	FROM RECORD

This is a decision on the Request to Withdraw as attorney or agent of record under 37 C.F.R. § 1.36(b), filed April 10, 2007.

The request is **APPROVED**.

A grantable request to withdraw as attorney/agent of record must be signed by every attorney/agent seeking to withdraw or contain a clear indication that one attorney is signing on behalf of another/others. A request to withdraw will not be approved unless at least 30 (thirty) days would remain between the date of approval and the later of the expiration date of a time to file a response or the expiration date of the maximum time period which can be extended under 37 C.F.R. § 1.136(a).

The request was signed by Philip H. Albert on behalf of all attorneys of record. All attorneys/agents have been withdrawn. Applicant is reminded that there is no attorney of record at this time.

The request to change the correspondence of record is not acceptable as the requested correspondence address is not that of: (1) the first named signing inventor; or (2) an intervening assignee of the entire interest under 37 C.F.R 3.71. All future communications from the Office will be directed to the first named signing inventor at the first copied address below until otherwise properly notified by the applicant.

There is no outstanding Office action at this time.

Telephone inquiries concerning this decision should be directed to Terri Williams at 571-272-2991.

T. Williams

Terri Williams
Petitions Examiner
Office of Petitions

cc: **Simon Eric Miani Barber**
517 Mississippi Street
San Francisco, CA 94107

cc: **Daniel Kloke**
Carr & Ferrell
2200 Geng Road
Palo Alto, CA 94303

UNITED STATES PATENT AND TRADEMARK OFFICE

UNITED STATES DEPARTMENT OF COMMERCE
United States Patent and Trademark Office
Address: COMMISSIONER FOR PATENTS
P.O. Box 1450
Alexandria, Virginia 22313-1450
www.uspto.gov

APPLICATION NUMBER	FILING OR 371 (c) DATE	FIRST NAMED APPLICANT	ATTY. DOCKET NO./TITLE
10/409,553	04/07/2003	Simon Eric Miani Barber	021380-000100US

CONFIRMATION NO. 4850

OC000000025457569

20350
TOWNSEND AND TOWNSEND AND CREW, LLP
TWO EMBARCADERO CENTER
EIGHTH FLOOR
SAN FRANCISCO, CA 94111-3834

Date Mailed: 08/20/2007

NOTICE REGARDING CHANGE OF POWER OF ATTORNEY

This is in response to the Power of Attorney filed 04/10/2007.

- The withdrawal as attorney in this application has been accepted. Future correspondence will be mailed to the new address of record. 37 CFR 1.33.

Kerri Williams

Office of Initial Patent Examination (571) 272-4000, or 1-800-PTO-9199

FORMER ATTORNEY/AGENT COPY

UNITED STATES PATENT AND TRADEMARK OFFICE

Commissioner for Patents
United States Patent and Trademark Office
P.O. Box 1450
Alexandria, VA 22313-1450
www.uspto.gov

Paper No. 6

Carlos A. Torres
Browning Bushman
5718 Westheimer, Suite 1800
Houston, TX 77057

COPY MAILED
JUL 2 9 2003
OFFICE OF PETITIONS

In re Application of	:	
Akesson et al.	:	
Application No. 10/409,581	:	DECISION GRANTING PETITION
Filed: April 8, 2003	:	
Attorney Docket No. DBS-109	:	

This is a decision on the petition filed July 18, 2003, requesting that the above-identified application be accorded a filing date of April 8, 2003.

On April 8, 2003, applicants deposited the above-identified application. However, on June 5, 2003, the Office of Initial Patent Examination mailed a "Notice Of Incomplete Reissue Application," requiring a specification of applicants' invention and stating that the filing date would be the date of receipt of the omitted specification.

In response, on July 18, 2003, applicants filed, inter alia, the present petition, a copy of the specification, and authorized payment of the $130.00 petition fee. Additionally, applicants' included a copy of the date stamped postcard receipt acknowledging receipt of "USA Patent copies - 8pgs" on April 8, 2003.

Upon review of the record, the specification, deposited on April 8, 2003, has not been located among the application papers. However, the evidence is convincing that the application papers deposited on April 8, 2003, included a specification, which was subsequently misplaced in the United States Patent and Trademark Office. Therefore, the application was complete on filing and will be granted a filing date of April 8, 2003.

Accordingly, the petition is granted. The Notice of Incomplete was sent in error and is hereby vacated. Accordingly, the $130.00 petition fee is unnecessary and will be credited to Deposit Account No. 02-4345.

The application file is being forwarded to the Office of Initial Patent Examination for further processing with a filing date of April 8, 2003, using the pages of specification submitted on petition, and for the mailing of a corrected filing receipt.

Any inquiries related to this decision should be directed to the undersigned at (703) 306-5589.

Christina Tartera Donnell

Christina Tartera Donnell
Senior Petitions Attorney
Office of Petitions

UNITED STATES PATENT AND TRADEMARK OFFICE

UNITED STATES DEPARTMENT OF COMMERCE
United States Patent and Trademark Office
Address: COMMISSIONER FOR PATENTS
P.O. Box 1450
Alexandria, Virginia 22313-1450
www.uspto.gov

LEON R TURKEVICH
2000 M STREET NW
7TH FLOOR
WASHINGTON, DC 200363307

Mail Date: 06/18/2010

Applicant	: Taiqi Fu	: DECISION ON REQUEST FOR
Patent Number	: 7633929	: RECALCULATION of PATENT
Issue Date	: 12/15/2009	: TERM ADJUSTMENT IN VIEW
Application No	: 10/409,583	: OF WYETH AND NOTICE OF INTENT TO
Filed	: 04/09/2003	: ISSUE CERTIFICATE OF CORRECTION
		:

The Request for Recalculation is **GRANTED** to the extent indicated.

The patent term adjustment has been determined to be **1590** days. The USPTO will *sua sponte* issue a certificate of correction reflecting the amount of PTA days determined by the recalculation.

Prior to the issuance of the certificate of correction, the USPTO will afford patentee an opportunity to be heard and request reconsideration. Accordingly, patentee has **one month or thirty (30) days**, whichever is longer, to file a request for reconsideration of this patent term adjustment calculation. See 35 U.S.C. 154(b)(3)(B)(ii) and 37 CFR 1.322(a)(4). No extensions of time will be granted under 37 CFR 1.136.

Patentee should use document code PET.OP if electronically filing a request for reconsideration of this patent term adjustment calculation. The patentee must also include the information required by 37 CFR 1.705(b)(2) and the fee required by 37 CFR 1.18(e). If patentee does not file a timely request for reconsideration of this patent term adjustment calculation including the information required by 37 CFR 1.705(b)(2) and the fee required by 37 CFR 1.18(e), the USPTO will issue a certificate of correction reflecting the PTA determination noted above.

Patentee should be aware that in order to preserve the right to review in the United States District Court for the District of Columbia of the USPTO patent term adjustment determination, patentee must ensure that he or she also take the steps required under 35 U.S.C. 154(b)(4)(A) in a timely manner. Nothing in the request for recalculation should be construed as providing an alternative time frame for commencing a civil action under 35 U.S.C. 154(b)(4)(A).

Any questions concerning this decision should be directed to the Office of Patent Legal Administration at 571-272-7702.

UNITED STATES PATENT AND TRADEMARK OFFICE

Commissioner for Patents
United States Patent and Trademark Office
P.O. Box 1450
Alexandria, VA 22313-1450
www.uspto.gov

NIXON & VANDERHYE, PC
901 NORTH GLEBE ROAD, 11TH FLOOR
ARLINGTON VA 22203

COPY MAILED

NOV 19 2007

OFFICE OF PETITIONS

In re Application of	:	
NIWA, Rinpei et al.	:	
Application No. 10/409,598	:	DECISION ON PETITION
Filed: April 09, 2003	:	TO WITHDRAW
Attorney Docket No. **BJS-249-302**	:	FROM RECORD

This is a decision on the Request to Withdraw as attorney or agent of record under 37 C.F.R. § 1.36(b), filed September 14, 2007.

The request is **NOT APPROVED.**

A grantable request to withdraw as attorney/agent of record must be signed by every attorney/agent seeking to withdraw or contain a clear indication that one attorney is signing on behalf of another/others. A request to withdraw will not be approved unless at least 30 (thirty) days would remain between the date of approval and the later of the expiration date of a time to file a response or the expiration date of the maximum time period which can be extended under 37 C.F.R. § 1.136(a).

In order to request or take action in a patent matter, the assignee must establish its ownership of the patent to the satisfaction of the Director. In this regard, a Statement under 37 CFR 3.73(b) must have either: (i) documentary evidence of a chain of title from the original owner to the assignee (*e.g.*, copy of an executed assignment), and a statement affirming that the documentary evidence of the chain of title from the original owner to the assignee was or concurrently is being submitted for recordation pursuant to § 3.11; or (ii) a statement specifying where documentary evidence of a chain of title from the original owner to the assignee is recorded in the assignment records of the Office (*e.g.*, reel and frame number).

All future communications from the Office will continue to be directed to the above-listed address until otherwise notified by applicant.

Telephone inquiries concerning this decision should be directed to Tredelle Jackson at 571-272- 2783.

Monica A. Graves
Petitions Examiner
Office of Petitions

cc: **ALFRED ZAHER, BLANK ROME LLP**
ONE LOGAN SQUARE
130 NORTH 18TH STREET
PHILADELPHIA, PA 19103-6998

UNITED STATES PATENT AND TRADEMARK OFFICE

Commissioner for Patents
United States Patent and Trademark Office
P.O. Box 1450
Alexandria, VA 22313-1450
www.uspto.gov

NIXON & VANDERHYE, P.C.
901 NORTH GLEBE ROAD
11TH FLOOR
ARLINGTON, VA 22203

COPY MAILED

MAR 17 2008

OFFICE OF PETITIONS

In re Application of	:	
Yutaka Kanda, et al.	:	
Application No. 10/409/600	:	DECISION ON PETITION
Filed: April 9, 2003	:	TO WITHDRAW
Attorney Docket No. Q104623	:	FROM RECORD
	:	

This is a decision on the Request to Withdraw as attorney or agent of record under 37 C.F.R. § 1.36(b) filed September 14, 2007.

The request is **DISMISSED** as moot.

A review of the file record indicates that the power of attorney to Nixon & Vanderhye, PC has been revoked by the assignee of the patent application on November 29, 2007. Accordingly, the request to withdraw under 37 C.F.R. § 1.36(b) is moot.

All future communications from the Office will continue to be directed to the below-listed address until otherwise notified by applicant.

Telephone inquires concerning this decision should be directed to undersigned at 571-272- 1642.

April M. Wise
Petitions Examiner
Office of Petitions

cc: ALFRED ZAHER
BLANK ROME, LLP
ONE LOGAN SQUARE
130 NORTH 18TH STREET
PHILADELPHIA, PA 19103-6998

UNITED STATES PATENT AND TRADEMARK OFFICE

Commissioner for Patents
United States Patent and Trademark Office
P.O. Box 1450
Alexandria, VA 22313-1450
www.uspto.gov

NIXON & VANDERHYE, PC
901 NORTH GLEBE ROAD, 11TH FLOOR
ARLINGTON, VA 22203

COPY MAILED

NOV 0 2 2007

OFFICE OF PETITIONS

In re Application of	
Kazuyasu Nakamura et al.	
Application No. 10/409,608	DECISION ON PETITION
Filed: April 9, 2003	TO WITHDRAW
Attorney Docket No. BJS-249-304	FROM RECORD

This is a decision on the Request to Withdraw as attorney or agent of record under 37 C.F.R. § 1.36(b), filed September 14, 2007.

The request is **NOT APPROVED**.

A grantable request to withdraw as attorney/agent of record must be signed by every attorney/agent seeking to withdraw or contain a clear indication that one attorney is signing on behalf of another/others. A request to withdraw will not be approved unless at least 30 (thirty) days would remain between the date of approval and the later of the expiration date of a time to file a response or the expiration date of the maximum time period which can be extended under 37 C.F.R. § 1.136(a).

The Office cannot approve the request at this time since the reasons provided do not meet any of the conditions under the mandatory or permissive categories enumerated in 37 CFR 10.40. Section 10.40 of Title 37 of the Code of Federal Regulation states, "[a] practitioner shall not withdraw from employment in a proceeding before the Office without permission from the Office[.]" More specifically, 37 CFR 10.40 states, "[i]f paragraph (b) of this section is not applicable, a practitioner may not request permission to withdraw in matter pending before the Office unless such request or such withdrawal is" for one the permissive reasons listed in 37 CFR 10.40(c). The reason set forth in the request, "[A]ssignee has instructed to transfer responsibility..." does not meet any of the conditions set forth in 37 CFR 10.40.

In view of the file record an assignee has not properly intervened in this application. Compliance with 37 CFR 3.73(b) has not been met. If assignee of the entire interest under 37 CFR 3.71 desires to intervene in this application or appoint counsel to represent him, then the appropriate power of attorney documents must be submitted. A courtesy copy will be mailed to the address noted in the petition.

All future communications from the Office will continue to be directed to the above-listed address until otherwise notified by applicant or assignee.

A notice of appeal was filed on August 22, 2007. Failure to timely respond will result in the abandonment of this application.

Telephone inquiries concerning this decision should be directed to Kimberly Inabinet at 571-272- 4618.

Kimberly Inabinet
Petitions Examiner
Office of Petitions

cc: Mr. Alfred Zaher
Blank Rome LLP
One Logan Square
130 North 18th Street
Philadelphia, PA 19103-6998

UNITED STATES PATENT AND TRADEMARK OFFICE

Commissioner for Patents
United States Patent and Trademark Office
P.O. Box 1450
Alexandria, VA 22313-1450
www.uspto.gov

Nixon & Vanderhye, P.C.
901 North Glebe Road, 11th Floor
Arlington, VA 22203

COPY MAILED

DEC 12 2007

OFFICE OF PETITIONS

In re Application of	:	
Kazuyasu Nakamura et al.	:	
Application No. 10/409,608	:	DECISION ON PETITION
Filed: April 9, 2003	:	TO WITHDRAW
Attorney Docket No. BJS-249-304	:	FROM RECORD
	:	

This is a decision on the Request to Withdraw as attorney or agent of record under 37 C.F.R. § 1.36(b), filed November 14, 2007.

The request is **NOT APPROVED** as moot.

A review of the file record indicates that the power of attorney to B. J. Sadoff and all attorneys/agents of record has been revoked by the assignee of the patent application on November 29, 2007. Accordingly, the request to withdraw under 37 C.F.R. § 1.36(b) is moot.

A notice of appeal was filed on August 22, 2007. Failure to reply timely will result in the abandonment of this application.

All future communications from the Office will continue to be directed to the below-listed address until otherwise notified by applicant.

Telephone inquires concerning this decision should be directed to Kimberly Inabinet at 571-272- 4618.

Kimberly Inabinet
Kimberly Inabinet
Petitions Examiner
Office of Petitions

cc: Sughrue-265550
2100 Pennsylvania Avenue, NW
Washington, DC 20037-3213

UNITED STATES PATENT AND TRADEMARK OFFICE

Commissioner for Patents
United States Patent and Trademark Office
P.O. Box 1450
Alexandria, VA 22313-1450
www.uspto.gov

SUGHRUE-265550
2100 PENNSYLVANIA AVE. NW
WASHINGTON, DC 20037-3213

COPY MAILED

DEC 14 2007

OFFICE OF PETITIONS

In re Application of Nakamura et al. :
Application No. 10/409,611 :
Filing Date: April 9, 2003 :
Attorney Docket No. 249-303 :

Decision on Petition

This is a decision on the petition under 37 CFR 1.181, filed July 13, 2007, to withdraw the holding of abandonment.

The petition is **dismissed as moot.**

A Notice of Appeal was filed December 14, 2006.

A Notice of Abandonment was mailed July 12, 2007. The Notice states an appeal brief was not timely filed.

The instant petition was filed July 13, 2007, along with a RCE and a request for a five-month extension of time.

A review of the file indicates the RCE was timely filed. Since the RCE was timely filed, the application did not legally become abandoned. Therefore, the Notice of Abandonment was mailed in error.

On July 24, 2007, prior to the Office mailing a decision in response to the instant petition, the Office mailed a Notice, signed by a Legal Instruments Examiner, stating, "The holding of abandonment mailed 7/12/07, has been withdrawn." The relief requested in the petition appears unnecessary since the holding of abandonment has already been withdrawn. Therefore, the instant petition is dismissed as moot.

Technology Center Art Unit 1633 will be informed of the instant decision and the examiner will consider the RCE and other papers filed July 13, 2007, in due course.

Telephone inquiries regarding this communication should be directed to Petitions Attorney Steven Brantley at (571) 272-3203.

Charles Steven Brantley
Senior Petitions Attorney
Office of Petitions

UNITED STATES PATENT AND TRADEMARK OFFICE

Commissioner for Patents
United States Patent and Trademark Office
P.O. Box 1450
Alexandria, VA 22313-1450
www.uspto.gov

NIXON & VANDERHYE, PC
901 NORTH GLEBE ROAD
11TH FLOOR
ARLINGTON, VA 22203-1808

COPY MAILED

JUN 0 9 2008

In re Application of	:	
Kauyasu Nakamura, et al.	:	
Application No. 10/409,611	:	DECISION ON PETITION
Filed: April 9, 2003	:	TO WITHDRAW
Attorney Docket No. 249-303	:	FROM RECORD
	:	

This is a decision on the Request to Withdraw as attorney or agent of record under 37 C.F.R. § 1.36(b), filed September 14, 2007.

The request is **DISMISSED** as moot.

A review of the file record indicates that the power of attorney to Nixon & Vanderhye, PC has been revoked by the assignee of the patent application on November 29, 2007. Accordingly, the request to withdraw under 37 C.F.R. § 1.36(b) is moot.

All future communications from the Office will continue to be directed to the below-listed address until otherwise notified by applicant.

Telephone inquires concerning this decision should be directed to undersigned at 571-272- 1642.

April M. Wise
Petitions Examiner
Office of Petitions

cc: MR. ALFRED ZAHER
BLANK ROME, LLP
ONE LOGAN SQUARE
130 NORTH 18TH STREET
PHILADELPHIA, PA 19103-6998

UNITED STATES PATENT AND TRADEMARK OFFICE

Commissioner for Patents
United States Patent and Trademark Office
P.O. Box 1450
Alexandria, VA 22313-1450
www.uspto.gov

MAY 2 2006

CROWELL & MORNING, LLP
INTELLECTUAL PROPERTY GROUP
P. O. BOX 14300
WASHINGTON, DC 20044-4300

In re Application of	:
Matthias Gerlach et al	:
Serial No.: 10/409,614	: PETITION DECISION
Filed: April 9, 2003	:
Attorney Docket No.: 029310.52224	:

This is in response to the petitions under 37 CFR 1.144 and under 37 CFR 1.181, both filed December 22, 2005, requesting (1) withdrawal of an improper restriction requirement and (2) entry of an amendment after Final rejection. The petitions will be addressed individually, however the background for each is essentially the same. The delay in acting on these petitions is regretted.

BACKGROUND

A review of the file history shows that this application was filed under 35 U.S.C. 111 and contained 21 claims, as filed, all directed to compounds, pharmaceutical compositions, methods of making the compounds and method for treating pain using the compounds. The examiner mailed a first Office action to applicants on August 11, 2004, setting forth a three was restriction requirement, as follows:

> Group I, claims 1-3, 5 and 7-21, directed to compounds for Formula I where Y is CR^8 and Z is N with no additional fused rings;
> Group II, claims 1-21, drawn to compounds of Formula I where Y is N and Z is CR^9 with no additional fused rings;
> Group III-- claims 1-21, drawn to compounds of Formula I where Y is N or CR^8 and Z is N or CR^9 with one or more additional fused rings.

The examiner reasoned that the inventions were independent and distinct and that there would be a serious burden to examine them together. The examiner also required election of a single disclosed species within whichever Group was elected.

Applicants replied on September 23, 2004, amending claim 1 and canceling claims 4-6. Applicants elected Group I with traverse, arguing that the Groups should all be examined

together (the amendment eliminated compounds of Group II) since they formed a proper Markush Group. A species was also elected.

The examiner mailed a new Office action to applicants on December 17, 2004, noting the election and the species and the traverse, but maintaining the restriction requirement based on the fact that Group I is directed to pyrazino[1,2a]pyramidine ring system compounds and Group III is directed to three or more fused rings and that the systems were not classified the same or capable of being searched in the same manner. The examiner made the requirement Final. The examiner then rejected claims 3, 9 and 17 under 35 U.S.C. 112, second paragraph, as indefinite and claims 1-3, 7-8 and 10-21 under 35 U.S.C. 112, first paragraph, as lacking enablement.

Applicants replied on April 18, 2005, amending claims 1, 7, 9 and 17. Applicants continued traversing the restriction requirement maintaining that it is applicants' right to have the full scope of the claimed invention examined and that all claimed compounds contained the pyrazino[1,2a]pyrimidine ring system and thus constituted a Markush group satisfying the criteria therefore by having a common structural core and a common utility. Applicants relied on M.P.E.P. 803.02 for support. The rejections of record were also specifically addressed.

The examiner mailed a Final Office action to applicants on June 22, 2005, setting a three month shortened statutory period for reply. The examiner maintained the restriction requirement for reasons of record and stated that the requirement had previously been made Final. The examiner then rejected claim 3 under 35 U.S.C. 112, second paragraph, for a minor indefinite phrase and maintained the rejection of claims 1-8 (1-3, 7-8) and 10-21 under 35 U.S.C. 112, first paragraph, for failing to comply with the written description requirement and for new matter and for lack of enablement. Claim 9 was indicated allowable, but objected to as dependent on a rejected claim.

Applicants filed an amendment on September 20, 2005, amending only claim 3 to delete the objected to phrase and traversed the rejections under 35 U.S.C. 112, first paragraph, as before. Traversal of the restriction requirement was continued.

On October 11, 1005, the examiner mailed an Advisory Action to applicants indicating the amendment would not be entered as it did not place the application in better form for appeal. No specific reason or explanation was given.

A personal interview with applicants' representative was held on December 1, 2005. Applicants filed the two petitions noted above and a Notice of Appeal on December 22, 2005.

<u>DISCUSSION</u> – Petition to enter the amendment filed September 20, 2005.

Applicants' petition states that the amendment should have been entered as it addresses a specific new rejection under 35 U.S.C. 112, second paragraph, and provides an amendment which overcomes it, thus reducing the issues for Appeal. Only claim 3, which was rejected under 35 U.S.C. 112, second paragraph, is amended by eliminating the objected to phrase. The examiner's comments in the Advisory Action do not address this amendment, but refer to rejections under 35 U.S.C. 112, first paragraph, which were addressed in the "Remarks" section of the amendment, but not addressed by any amendment per se. In view of this, the denial of

entry of the amendment filed September 20, 2005, was improper. The amendment is entered for purposes of Appeal.

DECISION

The petition is **GRANTED** with respect to entry of the amendment filed September 20, 2005.

DISCUSSION – Petition under 37 CFR 1.144 for withdrawal of the restriction requirement

Applicants argue that the restriction requirement should be withdrawn as the Markush Group of compounds is proper in that the compounds all have a significant portion of their structure in common and all have a similar utility – that of treating pain. All compounds are based on formula I, as shown:

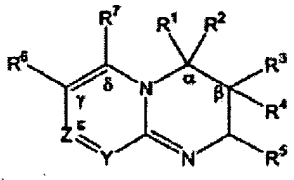

Applicants argue that all compounds contain a 3,4-dihydro-pyrazino[1,2a]pyrimidine structure and that this structure determines the classification of all of the compounds and that all species fall under this general classification. Applicants are correct with respect to compounds of Formula I where there are no additional rings fused to the basic core. However, R^1 or R^2 may combine with R^3 or R^4 to form W which is a 3-10 carbon moiety forming one or two fused rings as part of the basic structure (thus giving a three or four ring fused structure) which may further contain a heteroatom; and R^6 and R^7 may also join to form Q which is a four carbon chain creating a second fused ring system on the base structure.

Applicants argue that the examiner has not followed proper Markush practice as set forth in M.P.E.P. 803.02. However, this practice applies to a proper Markush group, especially where an election of species has been required, as here, following a restriction requirement. Applicants refer to the decision of *In re Weber* for support. Applicants' reliance is misplaced. Applicants' argument is basically that restriction within a claim, according to *In re Weber*, is not permitted. The decision does not stand for this and where there are multiple distinct compounds (as evidenced by differing core structures or number of fused rings) set forth in a claim in a Markush format, it is proper to separate the patentably distinct groups from each other as was done herein. It appears that applicants accepted such a division with respect to Groups I and II as proper, as the claims directed solely to Group II were canceled.

Normally when considering restriction among fused ring structures the number, arrangement and heteroatoms contained therein are taken into consideration. Classification of subject matter is initially determined by the number of rings, which heteroatoms are present and in what relationship to each other. Applicants have recognized that ring systems in which Y is N and Z is CR are different and are classified differently from ring systems in which Y is CR and Z is N and canceled claims to the latter structures. Applicants argue properly that all of the compounds

have a common utility, that of pain treatment, but fail in their arguments that the Formula I structure is common to all compounds. Clearly many, if not all, of the compounds described and claimed have the pyrazino[1,2a]pyrimidine structure, but those with three, four or even five rings fused to the structure are separately classified, especially if they contain an additional heteroatom, and would not normally be within the examiner's field of search when considering only the basic fused two ring structure. Nor would such compounds having three, four or five rings be available as a reference against the base structure, nor would they be likely to be cross-referenced in the classification system to the fused two ring structure area. The compounds containing three or more fused rings are thus distinct from those with only two fused rings and are capable of supporting separate patents. The restriction between Groups I and III is considered proper and is maintained.

DECISION

The petition under 37 CFR 1.144 to withdraw the restriction requirement is **DENIED** for the reasons set forth above.

Applicants remain under obligation to file an appropriate Appeal Brief within the time period set by filing the Notice of Appeal or as extended under 37 CFR 1.136(a).

Should there be any questions about this decision please contact William R. Dixon, Jr., by letter addressed to Director, TC 1600, at the address listed above, or by telephone at 703-308-3824 or by facsimile sent to the general Office facsimile number, 571-273-8300.

George C. Elliott

George C. Elliiott
Director, Technology Center 1600

UNITED STATES PATENT AND TRADEMARK OFFICE

UNITED STATES DEPARTMENT OF COMMERCE
United States Patent and Trademark Office
Address: COMMISSIONER FOR PATENTS
P.O. Box 1450
Alexandria, Virginia 22313-1450
www.uspto.gov

FISH & RICHARDSON P.C.
P.O. Box 1022
MINNEAPOLIS, MN 55440-1022

Mail Date: 04/20/2010

Applicant	: Christopher Ethier	: DECISION ON REQUEST FOR
Patent Number	: 7653876	: RECALCULATION of PATENT
Issue Date	: 01/26/2010	: TERM ADJUSTMENT IN VIEW
Appliction No	: 10/409,622	: OF WYETH AND NOTICE OF INTENT TO
Filed	: 04/07/2003	: ISSUE CERTIFICATE OF CORRECTION
		:

The Request for Recalculation is **GRANTED** to the extent indicated.

The patent term adjustment has been determined to be **386** days. The USPTO will *sua sponte* issue a certificate of correction reflecting the amount of PTA days determined by the recalculation.

Prior to the issuance of the certificate of correction, the USPTO will afford patentee an opportunity to be heard and request reconsideration. Accordingly, patentee has **one month or thirty (30) days**, whichever is longer, to file a request for reconsideration of this patent term adjustment calculation. See 35 U.S.C. 154(b)(3)(B)(ii) and 37 CFR 1.322(a)(4). No extensions of time will be granted under 37 CFR 1.136.

Patentee should use document code PET.OP if electronically filing a request for reconsideration of this patent term adjustment calculation. The patentee must also include the information required by 37 CFR 1.705(b)(2) and the fee required by 37 CFR 1.18(e). If patentee does not file a timely request for reconsideration of this patent term adjustment calculation including the information required by 37 CFR 1.705(b)(2) and the fee required by 37 CFR 1.18(e), the USPTO will issue a certificate of correction reflecting the PTA determination noted above.

Patentee should be aware that in order to preserve the right to review in the United States District Court for the District of Columbia of the USPTO patent term adjustment determination, patentee must ensure that he or she also take the steps required under 35 U.S.C. 154(b)(4)(A) in a timely manner. Nothing in the request for recalculation should be construed as providing an alternative time frame for commencing a civil action under 35 U.S.C. 154(b)(4)(A).

Any questions concerning this decision should be directed to the Office of Patent Legal Administration at 571-272-7702.

UNITED STATES PATENT AND TRADEMARK OFFICE

UNITED STATES DEPARTMENT OF COMMERCE
United States Patent and Trademark Office
Address: COMMISSIONER FOR PATENTS
P.O. Box 1450
Alexandria, Virginia 22313-1450
www.uspto.gov

APPL NO.	FILING OR 371 (c) DATE	ART UNIT	FIL FEE REC'D	ATTY.DOCKET NO	DRAWINGS	TOT CLMS	IND CLMS
10/409,636	04/07/2003	3742	2356	9858-000336	5	46	15

CONFIRMATION NO. 4776

CORRECTED FILING RECEIPT

OC000000013156233

Harness, Dickey & Pierce, P.L.C.
Suite 400
7700 Bonhomme Avenue
Saint Louis, MO 63105

Date Mailed: 07/06/2004

Receipt is acknowledged of this regular Patent Application. It will be considered in its order and you will be notified as to the results of the examination. Be sure to provide the U.S. APPLICATION NUMBER, FILING DATE, NAME OF APPLICANT, and TITLE OF INVENTION when inquiring about this application. Fees transmitted by check or draft are subject to collection. Please verify the accuracy of the data presented on this receipt. **If an error is noted on this Filing Receipt, please write to the Office of Initial Patent Examination's Filing Receipt Corrections, facsimile number 703-746-9195. Please provide a copy of this Filing Receipt with the changes noted thereon. If you received a "Notice to File Missing Parts" for this application, please submit any corrections to this Filing Receipt with your reply to the Notice. When the USPTO processes the reply to the Notice, the USPTO will generate another Filing Receipt incorporating the requested corrections (if appropriate).**

Applicant(s)

Darrin H. MacKenzie, Windsor, VT;
Christopher J. Conway, Wilmot, NH;
Mark Gugliotta, Concord, NH;
Kevin J. Kinerson, Corinth, VT;

Domestic Priority data as claimed by applicant

Foreign Applications

If Required, Foreign Filing License Granted: 06/03/2003

Projected Publication Date: 10/14/2004

Non-Publication Request: No

Early Publication Request: No

Title

Retractable electrode coolant tube

Preliminary Class

219

LICENSE FOR FOREIGN FILING UNDER
Title 35, United States Code, Section 184
Title 37, Code of Federal Regulations, 5.11 & 5.15

GRANTED

The applicant has been granted a license under 35 U.S.C. 184, if the phrase "IF REQUIRED, FOREIGN FILING LICENSE GRANTED" followed by a date appears on this form. Such licenses are issued in all applications where the conditions for issuance of a license have been met, regardless of whether or not a license may be required as set forth in 37 CFR 5.15. The scope and limitations of this license are set forth in 37 CFR 5.15(a) unless an earlier license has been issued under 37 CFR 5.15(b). The license is subject to revocation upon written notification. The date indicated is the effective date of the license, unless an earlier license of similar scope has been granted under 37 CFR 5.13 or 5.14.

This license is to be retained by the licensee and may be used at any time on or after the effective date thereof unless it is revoked. This license is automatically transferred to any related applications(s) filed under 37 CFR 1.53(d). This license is not retroactive.

The grant of a license does not in any way lessen the responsibility of a licensee for the security of the subject matter as imposed by any Government contract or the provisions of existing laws relating to espionage and the national security or the export of technical data. Licensees should apprise themselves of current regulations especially with respect to certain countries, of other agencies, particularly the Office of Defense Trade Controls, Department of State (with respect to Arms, Munitions and Implements of War (22 CFR 121-128)); the Office of Export Administration, Department of Commerce (15 CFR 370.10 (j)); the Office of Foreign Assets Control, Department of Treasury (31 CFR Parts 500+) and the Department of Energy.

NOT GRANTED

No license under 35 U.S.C. 184 has been granted at this time, if the phrase "IF REQUIRED, FOREIGN FILING LICENSE GRANTED" DOES NOT appear on this form. Applicant may still petition for a license under 37 CFR 5.12, if a license is desired before the expiration of 6 months from the filing date of the application. If 6 months has lapsed from the filing date of this application and the licensee has not received any indication of a secrecy order under 35 U.S.C. 181, the licensee may foreign file the application pursuant to 37 CFR 5.15(b).

UNITED STATES PATENT AND TRADEMARK OFFICE

COMMISSIONER FOR PATENTS
UNITED STATES PATENT AND TRADEMARK OFFICE
P.O. BOX 1450
ALEXANDRIA, VA 22313-1450
www.uspto.gov

Paper No. 6

Patent Counsel
Applied Materials, Inc.
Legal Affairs Department
P.O. BOX 450A
Santa Clara CA 95052

COPY MAILED

JAN 0 5 2004

OFFICE OF PETITIONS

In re Application of Sarfaty et al. Application No. 10/409,649 Filed: April 8, 2003 Attorney Docket No. 5605/CMP/ECP/RKK	: : : : : :	DECISION REFUSING STATUS UNDER 37 CFR 1.47(a)

This is in response to the petition under 37 CFR 1.47(a), filed December 5, 2003. Applicants obtained a four-month extension of time to reply. Accordingly, the petition is filed timely.

The petition is **dismissed**.

Applicants are given TWO (2) MONTHS from the mailing date of this decision to reply, correcting the below-noted deficiencies. Any reply should be entitled "Request for Reconsideration of Petition Under 37 CFR 1.47(a)," and should address the deficiencies noted below, except that the reply may include an oath or declaration executed by the non-signing inventor. Failure to respond will result in abandonment of the application. Any extensions of time will be governed by 37 CFR 1.136(a).

The above-identified application was filed on April 8, 2003, without an executed oath or declaration. Accordingly, on June 5, 2003, the Office mailed a "Notice to File Missing Parts of Application," requiring an executed oath or declaration, the basic filing fee, claim fees, and a surcharge.

In response, on December 5, 2003, applicants filed the present petition, a declaration signed by one of the three joint inventors, a request for a four-month extension of time to reply, and paid the necessary fees.

In the Statement of Facts, Brian M. Dugan states that a declaration and power of attorney relating to Practitioner's Docket No. 5605 were forwarded to Mr. Sreenivasan and to Mr. Le via his attorney. Mr. Dugan further states that Mr. Sreenivasan refused to sign the declaration because he did not believe he should be included as an inventor. Mr. Dugan asserts that Mr. Le refused to sign the declaration unless he was named as the sole inventor.

A grantable petition under 37 CFR 1.47(a) requires: (1) proof that the non-signing inventor cannot be reached or refuses to sign the oath or declaration after having been presented with the application papers (specification, claims and drawings); (2) an acceptable oath or declaration in compliance with 35 U.S.C. §§ 115 and 116; (3) the petition fee; and (4) a statement of the last known address of the non-signing inventor. Applicants lack items (1) and (2) as set forth above.

As to item (1), Mr. Dugan states that a declaration and power of attorney were forwarded to the nonsigning inventors. It is unclear from the record whether Messrs. Sreenivasan and Le were presented with the complete application papers. Unless Messrs. Sreenivasan and Le were presented with a complete copy of the application papers, including the specification, claims and drawings, they could not attest that they have "reviewed and understand[] the application papers," and therefore, could not sign the declaration that they were given. Accordingly, applicants failed to show or provide proof that the two inventors have refused to sign the declaration. See MPEP 409.03(d). To show that the inventors have refused to join in the application, applicants must show that complete copies of the application papers, including the specification, claims and drawings, were presented to Messrs. Sreenivasan and Le, personally or through their designated representatives, and that they did not respond to the request that they sign the declaration.

As to item (2), applicants failed to submit an oath or declaration for the patent application in compliance with 37 CFR 1.63 and 1.64. The declaration does not identify the country of citizenship of inventor Le. The Office notes that the oath or declaration must identify the country of citizenship of each inventor. See 37 CFR 1.63(a)(3). Additionally, the declaration does not properly identify the residence or mailing address of Mr. Le. Rather, the declaration lists Mr. Le's residence as "President of Andrew NDT Engineering" and mailing address as "President of Andrew NDT Engineering U.S.A." The Office notes that the declaration must identify "[t]he mailing address, and the residence if an inventor lives at a location which is different from where the inventor customarily receives mail, of each inventor. . . ." 37 CFR 1.63(c)(1).

Accordingly, to correct the deficiencies, applicants must submit a declaration in compliance with 37 CFR 1.63 and 1.67, which identifies the entire inventive entity and the correct mailing address and citizenship of each inventor and is signed by the signing inventors on behalf of the nonsigning inventors, Messrs. Sreenivasan and Le.

The $130.00 petition fee will be charged to Deposit Account No. 04-1696, as authorized.

Further correspondence with respect to this matter should be addressed as follows and **to the attention of Christina Tartera Donnell, Senior Petitions Attorney:**

By mail: Commissioner for Patents
Mail Stop Petitions
PO Box 1450
Alexandria, VA 22313-1450

By FAX: (703) 872-9306
Attn: Office of Petitions

By hand: 2011 South Clark Place
Customer Window
Crystal Plaza Two, Lobby, Room 1B03
Arlington, VA

Telephone inquiries concerning this matter may be directed to the undersigned at (703) 306-5589.

Christina Tartera Donnell

Christina Tartera Donnell
Senior Petitions Attorney
Office of Petitions

UNITED STATES PATENT AND TRADEMARK OFFICE

Commissioner for Patents
United States Patent and Trademark Office
P.O. Box 1450
Alexandria, VA 22313-1450
www.uspto.gov
DIW 04-04

Paper No. 10

PATENT COUNSEL
APPLIED MATERIALS, INC.
LEGAL AFFAIRS DEPARTMENT
P.O. BOX 450A
SANTA CLARA CA 95052

COPY MAILED
MAY 0 4 2004
OFFICE OF PETITIONS

In re Application of	:
Sarfaty, Sreenivasan, and Le	: DECISION ACCORDING STATUS
Application No. 10/409,649	: UNDER 37 CFR 1.47(a)
Filed: 8 April, 2003	:
Atty Docket No. 5605/CMP/ECP/RKK	:

This is in response to the renewed petition filed under 37 CFR 1.47(a) on 5 April, 2004.

The petition is **GRANTED**.

Petitioners have shown that the non-signing inventors has refused to join in the filing of the above-identified application after having been provided a copy of the application papers. Specifically, petitioners provided statements from the non-signing inventors, Ramaswamy Sreenivasan and Cuong Le, stating that they received the application papers but are refusing to sign the declaration naming them as joint inventors along with Moshe Sarfaty.

The above-identified application and papers have been reviewed and found in compliance with 37 CFR 1.47(a). This application is hereby accorded Rule 1.47(a) status.

As provided in Rule 1.47(c), this Office will forward notice of this application's filing to the non-signing inventor at the address given in the Declaration. Notice of the filing of this application will also be published in the Official Gazette.

After this decision is mailed, the application will be forwarded to the Office of Initial Patent Examination for further processing.

Telephone inquiries related to this decision should be directed to the undersigned at 703-308-6918.

D Wood

Douglas I. Wood
Senior Petitions Attorney
Office of Petitions

UNITED STATES PATENT AND TRADEMARK OFFICE

COMMISSIONER FOR PATENTS
UNITED STATES PATENT AND TRADEMARK OFFICE
P.O. BOX 1450
ALEXANDRIA, VA 22313-1450
www.uspto.gov

JUL -9 2004

In re Application of	:	
John McAlpine	:	
Serial No. 10/409,680	:	DECISION ON PETITION
Filed: April 8, 2003	:	TO MAKE SPECIAL
For: BOOT CONSTRUCTION WITH	:	
MULTIPART VAMP	:	

Applicant's petition, filed May 28, 2004, seeks to have this application made special pursuant to the Accelerated Examination Program. The petition is GRANTED.

The petition has been reviewed and is found to be in compliance with the requirements for special status as set forth in Section 708.02(VIII) of the Manual of Patent Examining Procedures (MPEP).

Applicant is advised that the examiner's search will be restricted to the subject matter encompassed by the claims. In the event that the application receives a first action rejection, applicant is encouraged to arrange for an interview with the examiner, and to provide the examiner with a working copy of any proposed amendment one working day prior to the interview. Any amendment filed in response to a first action rejection which would require broadening of the field of search will be treated as an improper response.

PETITION GRANTED.

E. Rollins-Cross

E. Rollins-Cross, Director
Technology Center 3700

Michael J. Colitz, III
Holland & Knight, LLP
100 North Tampa Street, Suite 4100
Tampa, FL 33602-3644

UNITED STATES PATENT AND TRADEMARK OFFICE

Commissioner for Patents
United States Patent and Trademark Office
P.O. Box 1450
Alexandria, VA 22313-1450
www.uspto.gov

DECHERT LLP
P.O. BOX 100004
PALO ALTO, CA 94303-0961

COPY MAILED

JUN 21 2006

OFFICE OF PETITIONS

In re Application of	:	
Chen, et. al.	:	DECISION ON REQUEST
Application No. 10/409,681	:	TO WITHDRAW FROM
Filed: April 8, 2003	:	RECORD
Attorney Docket No. 366325-522	:	

This is a decision on the Request to Withdraw as attorney or agent of record under 37 CFR § 1.36(b), filed on March 10, 2006.

The request is **NOT APPROVED**.

A grantable request to withdraw as attorney/agent of record must be signed by every attorney/agent seeking to withdraw or contain a clear indication that one attorney is signing on behalf of another/others. A request to withdraw will not be approved unless at least 30 (thirty) days would remain between the date of approval and the later of the expiration date of a time to file a response or the expiration date of the maximum time period which can be extended under 37 CFR § 1.136(a).

The request cannot be approved because there remains less than 30 (thirty days) between the date of this decision and the maximum extendable time period for filing a response to the Office action mailed January 12, 2006.

Further, the Office cannot approve the request at this time since the reasons provided do not meet any of the conditions under the mandatory or permissive categories enumerated in 37 CFR 10.40. Section 10.40 of Title 37 of the Code of Federal Regulation states, "[a] practitioner shall not withdraw from employment in a proceeding before the Office without permission from the Office[.]" More specifically, 37 CFR 10.40 states, "[i]f paragraph (b) of this section is not applicable, a practitioner may not request permission to withdraw in matter pending before the Office unless such request or such withdrawal is" for one the permissive reasons listed in 37 CFR 10.40(c). The reasons set forth in the request, "Business Exigencies", do not meet any the conditions set forth in 37 CFR 10.40.

It appears that the assignee has made an attempt to intervene in the above-identified application. However, the General Power of Attorney filed April 6, 2006 is not a proper Power of Attorney and it does not comply with the provisions of 37 CFR 3.73(b). Therefore, in order for the assignee to intervene and make changes to the Power of Attorney, the proper Power of Attorney form and compliance with 37 CFR 3.73(b) must be satisfied. The forms requesting a change in the Power of Attorney and Statement under 37 CFR 3.73(b) may be found on the USPTO.gov website (Form Nos. PTO/SB/82 and PTO/SB/96).

All future communications from the Office will continue to be directed to the above-listed address until otherwise notified by applicant.

Telephone inquiries concerning this decision should be directed to Andrea Smith at (571) 272-3226.

Andrea Smith
Petitions Examiner
Office of Petitions

Conferee:

cc: JAMES L. OSBORNE, PH.D.
LAVIPHARM LABORATORIES, INC.
69 PRINCETON-HIGHTSTOWN ROAD
EAST WINDSOR, NJ 08520

LUCAS & MERCANTI, LLP
475 PARK AVENUE SOUTH
15TH FLOOR
NEW YORK, NY 10016

UNITED STATES PATENT AND TRADEMARK OFFICE

Commissioner for Patents
United States Patent and Trademark Office
P.O. Box 1450
Alexandria, VA 22313-1450
www.uspto.gov

ALSTON & BIRD LLP
BANK OF AMERICA PLAZA
101 SOUTH TRYON STREET, SUITE 4000
CHARLOTTE NC 28280-4000

MAILED

JUL 0 2 2009

OFFICE OF PETITIONS

In re Application of	:	
John CORNELIUS	:	
Application No. 10/409,688	:	DECISION ON PETITION
Filed: April 08, 2003	:	
Attorney Docket No. **18360/263399**	:	

This is a decision on the petition under the unintentional provisions of 37 CFR 1.137(b), filed June 12, 2009, to revive the above-identified application.

The petition is **GRANTED**.

The application became abandoned for failure to submit formal drawings in a timely manner in reply to the Notice of Allowability, mailed January 30, 2009, which set a period for reply of three (3) months. Accordingly, this application became abandoned on May 1, 2009.

The petition satisfies the requirements of 37 CFR 1.137(b) in that petitioner has supplied (1) the reply in the form of corrected formal drawings, (2) the petition fee of $1620, and (3) an adequate statement of unintentional delay. Accordingly, the reply to the Notice of Allowance is accepted as having been unintentionally delayed.

37 CFR 1.137(b)(3) requires a statement that "the entire delay in filing the required reply from the due date for the reply until the filing of a grantable petition pursuant to 37 CFR 1.137(b) was unintentional." Since the statement appearing in the petition varies from the language required by 37 CFR 1.137(b)(3), the statement is being construed as the required statement. Petitioner must notify the Office if this is **not** a correct reading of the statement appearing in the petition.

Telephone inquiries concerning this decision should be directed to Tredelle Jackson at (571) 272-2783.

This application is being referred to the Office of Data Management for processing into a patent.

Ramesh Krishnamurthy

Ramesh Krishnamurthy
Petitions Examiner
Office of Petitions

UNITED STATES PATENT AND TRADEMARK OFFICE

Commissioner for Patents
United States Patent and Trademark Office
P.O. Box 1450
Alexandria, VA 22313-1450
www.uspto.gov

COPY MAILED
AUG 0 8 2006
OFFICE OF PETITIONS

Dechert, LLP
1117 California Avenue
Palo Alto, CA 94304

In re Application of	:	
Li-Lan CHEN et al.	:	
Application No. 10/409,696	:	DECISION ON PETITION
Filed: April 8, 2003	:	TO WITHDRAW
Attorney Docket No. 366325-521	:	FROM RECORD
	:	

This is a decision on the Request to Withdraw as attorney or agent of record under 37 C.F.R. § 1.36(b), filed March 10, 2006.

The request is **NOT APPROVED** as moot.

A review of the file record indicates that the power of attorney to Daniel M. Becker has been revoked by the assignee of the patent application on May 4, 2006. Accordingly, the request to withdraw under 37 C.F.R. § 1.36(b) is moot.

All future communications from the Office will continue to be directed to the below-listed address until otherwise notified by applicant.

Telephone inquires concerning this decision should be directed to Monica A. Graves at 571-272-7253.

David Bucci
Petitions Examiner
Office of Petitions

cc: LUCAS & MERCANTI, LLP
475 Park Avenue South, 15th Floor
New York, NY 10016

UNITED STATES PATENT AND TRADEMARK OFFICE

Commissioner for Patents
United States Patent and Trademark Office
P.O. Box 1450
Alexandria, VA 22313-1450
www.uspto.gov

LUCAS & MERCANTI, LLP
475 PARK AVENUE SOUTH, 15TH FLOOR
NEW YORK, NY 10016

COPY MAILED

JUL 0 2 2009

OFFICE OF PETITIONS

In re Application of

Li-Lan H. CHEN, et al.
Application No. 10/409,696
Filed: April 8, 2003
Attorney Docket No. **224.0521-US**

DECISION ON PETITION TO WITHDRAW FROM RECORD

This is a decision on the Request to Withdraw as attorney or agent of record under 37 C.F.R. § 1.36(b), filed March 5, 2009.

The request is **APPROVED**.

A grantable request to withdraw as attorney/agent of record must be signed by every attorney/agent seeking to withdraw or contain a clear indication that one attorney is signing on behalf of another/others.

The request was signed by Michael N. Mercanti on behalf of all attorneys of record. All attorneys/agents associated have been withdrawn. Applicant is reminded that there is no attorney of record at this time.

All future communications from the Office will be directed to the assignee of the entire interest at the below until otherwise properly notified by the applicant.

The application became abandoned for failure to timely respond to the office Action mailed November 14, 2008.

Telephone inquiries concerning this decision should be directed to the undersigned at 571-272-7253.

/Monica A. Graves/
Petitions Examiner, Office of Petitions

cc: **JAMES L. OBSBORNE, PH.D.**
LAVIPHARM LABORATORIES, INC.
69 PRINCETON-HIGHTSTOWN ROAD
EAST WINDSOR, NJ 08520

UNITED STATES PATENT AND TRADEMARK OFFICE

COMMISSIONER FOR PATENTS
UNITED STATES PATENT AND TRADEMARK OFFICE
P.O. BOX 1450
ALEXANDRIA, VA 22313-1450
www.uspto.gov

OGILVY RENAULT
1981 MCGILL COLLEGE AVENUE
SUITE 1600
MONTREAL QC H3A2Y-3 CA CANADA

COPY MAILED

DEC 1 2 2003

OFFICE OF PETITIONS

Applicant: Beshai
Appl. No.: 10/409,702
Filing Date: April 9, 2003
Title: SELF-CONFIGURING DISTRIBUTED SWITCH
Attorney Docket No.: 9-13528-56US-2
Pub. No.: US 2003/0189938 A1
Pub. Date: October 9, 2003

This is a decision on the request for corrected patent application publication under 37 CFR 1.221(b), filed on November 19, 2003 for above-identified application.

The request is DISMISSED.

Applicant request that the application be republished because the patent application publication contains an error on page 10 of the publication, as the phrase "the complement (D - y) is the 1s complement of y.", is misspelled as the complement (D - y) is the 1s complement of ".

37 CFR 1.221(b) is applicable "only when the Office makes a material mistake which is apparent from Office records." A material mistake must affect the public's ability to appreciate the technical disclosure of the patent application publication, to determine the scope of the patent application publication, or to determine the scope of the provisional rights that an applicant may seek to enforce upon issuance of a patent.[1] The instant request does not identify a material mistake in the publication made by the Office:

The error on page 10 of the publication is an Office mistake, but it is not material mistake as required by 37 CFR 1.221(b). The error is not material because the mistake is an obvious typo and the parent application (09/286,431) has already issued as U.S. Patent # 6,570,872 and the claims, which relate to this feature have already been canceled from the instant application. The error in the publication does not affect the public's ability to appreciate the technical disclosure of the patent application publication, to determine the scope of the patent application publication or to determine the scope of the provisional rights that an applicant may seek to enforce upon issuance of a patent. The error also does not affect the use of the patent application publication as a prior art reference, because the earlier application has issued as a patent.

The applicant is advised that a "request for republication of an application previously published" may be filed under 37 CFR 1.221(a). Such a request for republication "must include a copy of the

[1] Changes to Implement Eighteen-Month Publication of Patent Applications, 65 FR 57023, 57038 (Sept. 20, 2000), 1239 Off. Gaz. Pat. Office Notices 63, 75 (Oct. 10, 2000) (final rule).

application in compliance with the Office's electronic filing system requirements and be accompanied by the publication fee set forth in § 1.18(d) and the processing fee set forth in § 1.17(i)." If the request for republication does not comply with the electronic filing system requirements, the republication will not take place and the publication fee set forth in § 1.18(d) will be refunded. The processing fee will be retained.

Any request for republication under 37 CFR 1.221(a), should be submitted via the EFS system and questions or request for reconsideration of this decision, should be addressed as follows:

By mail to: Mail Stop PGPUB
Commissioner for Patents
P.O. Box 1450
Alexandria, VA 22313-1450

By facsimile: 703-305-8568

The application is being forwarded to Technology Center 2665 to await further examination in due course.

Inquiries relating to this matter may be directed to the undersigned at (703) 308-8122 (voice) or (703) 746-3465 (facsimile).

Mark Polutta
Legal Advisor
Office of Patent Legal Administration
Office of the Deputy Commissioner
for Patent Examination Policy

UNITED STATES PATENT AND TRADEMARK OFFICE

Commissioner for Patents
United States Patent and Trademark Office
P.O. Box 1450
Alexandria, VA 22313-1450
www.uspto.gov

Anderson Gorecki & Manaras LLP
33 NAGOG PARK
ACTON MA 01720

COPY MAILED

JUL 08 2008

OFFICE OF PETITIONS

ON PETITION

In re Patent No. 7,230,952 :
Issue Date: June 12, 2007 :
Application No. 10/409,702 :
Filed: April 9, 2003 :
Attorney Docket No. 123-051 :

This is a decision on the petition filed September 6, 2007, which is being treated as a request under 37 CFR 3.81(b)[1] to correct the name of the assignee on the front page of a patent by way of a Certificate of Correction.

The request is **dismissed**.

The petition filed on September 6, 2007 identifies U.S. Patent No. 7,099,323, but the attorney docket number is associated with the above-identified application/patent. The certificate of correction filed with the petition identifies the above-identified application/patent. It is noted that the same firm is involved with both patents and both patents have the same assignee. The Office requests clarification of petitioner's wishes.

No processing fee will be charged until petitioner clarifies petitioner's wishes.

Further correspondence with respect to this matter should be addressed as follows:

By mail: Mail Stop PETITIONS
Commissioner for Patents
Post Office Box 1450
Alexandria, VA 22313-1450

[1] *See* MPEP 1309, subsection II; and Official Gazette of June 22, 2004.

By hand: Customer Service Window
Mail Stop Petitions
Randolph Building
401 Dulany Street
Alexandria, VA 22314

By fax: (571) 273-8300
ATTN: Office of Petitions

Telephone inquiries may be directed to the undersigned at (571) 272-3230.

Shirene Willis Brantley

Shirene Willis Brantley
Senior Patent Attorney
Office of Petitions

UNITED STATES PATENT AND TRADEMARK OFFICE

Commissioner for Patents
United States Patent and Trademark Office
P.O. Box 1450
Alexandria, VA 22313-1450
www.uspto.gov

Patent No. : 7,230,952 B2
Ser. No. : 10/409,702
Inventor(s) : Beshai
Issued : Jun. 12, 2007
Title : SELF-CONFIGURING DISTRIBUTED SWITCH
Docket No. : 123-051

Re: Request for Certificate of Correction

Consideration has been given your request for the issuance of a certificate of correction for the above-identified patent under the provisions of Rule(s) 1.322 and/or 1.323.

Assignees' names and addresses (assignment data) printed in a patent, are based *solely* on information supplied in the appropriate space for identifying the assignment data, i.e., item 3 of the Issue Fee Transmittal Form PTOL-85B. Granting of a request under 37 CFR 3.81(b) is required to correct applicant's error providing ***incorrect or erroneous*** assignment data, *before* issuance of a Certificate of Correction, under 37 CFR 1.323 *(see Manual of Patent Examining Procedures (M.P.E.P) Chp.1400, sect. 1481).* This procedure is required *at any time after the issue fee is paid*, including after issuance of the patent.

In view of the foregoing, your request, in this mater, is hereby denied.

A request to correct the Assignee under 37 CFR 3.81(b) should include:

A. **the processing fee set forth in 37 CFR 1.117(h) (currently $130);**
B. a statement that the failure to include the correct assignee name on the PTOL-85B was inadvertent; and
C. a copy of the Notice of Recordation of Assignment Document, reflecting the reel and frame number where the assignment(s) is recorded and/or reflecting proof of *the date* the assignment was submitted for recordation.

In the Request, Applicant(s) may request that the file be forwarded to Certificates of Correction Branch, for issuance of a Certificate of Correction, if the Request is granted.

Any request under 37 CFR 3.81(b) should be directed to the following address or facsimile number:

By mail: Mail Stop PETITIONS
Commissioner for Patents
Post Office Box 1450
Alexandria, VA 22313-1450

By hand: Customer Service Window
Mail Stop Petitions
Randolph Building
401 Dulany Street
Alexandria, VA 22314

By fax: (571) 273-0025
ATTN: Office of Petitions

If a fee (currently $100) was previously submitted for consideration of a Request for Certificate of Correction, under CFR 1.323, to correct assignment data, , no additional fee is required.

Ennis Young
For Mary Diggs
Decisions & Certificates
of Correction Branch
(703) **756-1542** or (703) 756-1814

UNITED STATES PATENT AND TRADEMARK OFFICE

Commissioner for Patents
United States Patent and Trademark Office
P.O. Box 1450
Alexandria, VA 22313-1450
www.uspto.gov

Anderson Gorecki & Manaras LLP
33 NAGOG PARK
ACTON MA 01720

COPY MAILED

DEC 0 4 2009

OFFICE OF PETITIONS

In re Patent No. 7,230,952 :
Issue Date: June 12, 2007 :
Application No. 10/409,702 : ON PETITION
Filed: April 9, 2003 :
Attorney Docket No. 123-051 :

This is a decision on the petition filed September 14, 2009, which is being treated as a request under 37 CFR 3.81(b)[1] to correct the name of the assignee on the front page of the above-identified patent by way of a Certificate of Correction.

The request is **GRANTED**.

Deposit account no. 50-2569 will be charged the processing fee set forth in § 1.17(i) of $130.00.

Telephone inquiries concerning this decision may be directed to the undersigned at (571) 272-3230. Inquiries regarding the issuance of a certificate of correction should be directed to the Certificate of Correction Branch at (571) 272-4200.

The Certificates of Correction Branch will be notified of this decision granting the petition under 37 CFR 3.81(b) and directing issuance of the requested Certificate of Correction.

Shirene Willis Brantley
Senior Petitions Attorney
Office of Petitions

[1] *See* MPEP 1309, subsection II; and Official Gazette of June 22, 2004.

UNITED STATES PATENT AND TRADEMARK OFFICE

COMMISSIONER OF PATENTS

April 11, 2005

Karl Stetson
2060 South St.
Coventry, CT. 06238

In re Application of:
Karl Andrew Stetson
Serial No: 10/409/713 On Petition
Filing Date: April 11, 2005
For: Processing Technique for Digital Speckle Photogrammetry

In response to the petitions received on October 28, 2004, to withdraw the holding of abandonment in the above application.

The petition is Granted.

The above-identified application became abandoned for failure to reply with the meaning of 37 C.D.R 1.113 in a timely manner to the Notice to File Corrected Application Papers mailed June 5 2003.
Which set forth a shortened statutory period for reply of two months. Accordingly, the above-identified application became abandoned August 6, 2003. The notice of abandonment was mailed on August 27, 2004.

The applicant is given two months from the date of this notice to respond to the informalities in the attached notice.

Telephone inquiries concerning this application may be directed to Doshie E. Day (703) 308-3640.

Doshie E. Day
Program Management Assistant
Office of Initial Patent Examination

UNITED STATES PATENT AND TRADEMARK OFFICE

COMMISSIONER FOR PATENTS
UNITED STATES PATENT AND TRADEMARK OFFICE
P.O. BOX 1450
ALEXANDRIA, VA 22313-1450
www.uspto.gov

Paper No.

Fliesler Meyer LLP
650 California Street
14th Floor
San Francisco CA 94108

COPY MAILED

JAN 07 2009

OFFICE OF PETITIONS

In re Patent No. 7,350,184	:	DECISION ON
Mitch Upton	:	REQUEST FOR RECONSIDERATION
Issue Date: March 25, 2008	:	OF PATENT TERM ADJUSTMENT
Application No. 10/409,753	:	AND
Filed: April 9, 2003	:	NOTICE OF INTENT TO ISSUE
Atty Docket No. ORACL-01280US1	:	CERTIFICATE OF CORRECTION

This is a decision on the "REQUEST FOR RECONSIDERATION OF PATENT TERM ADJUSTMENT under 37 CFR §1.705(d)" filed May 8, 2008. Patentee requests correction of the Patent Term Adjustment as shown on the Issue Notification (on the patent) from seven hundred four (704) days to eight hundred sixteen (816) days.

The request for reconsideration of the patent term adjustment indicated in the patent is **GRANTED to the extent indicated herein**.

The patent term adjustment indicated in the patent is to be corrected by issuance of a certificate of correction showing a revised Patent Term Adjustment of eight hundred fourteen (814) days.

On March 25, 2008, the above-identified application matured into U.S. Patent No. 7,350,184 with 704 days. The instant request for reconsideration filed May 8, 2008 was timely filed within 2 months of the date the patent issued. See § 1.705(d). The Patent issued with a revised Patent Term Adjustment of 814 days. Patentee disputes the entry of a reduction of 112 days for an information disclosure statement (IDS) associated with the filing of an IDS after the mailing of the notice of allowance.

Patentee's contention is well taken. 37 CFR 1.704(c) provides, in pertinent part, that:

> Circumstances that constitute a failure of the applicant to engage in reasonable efforts to conclude processing or examination of an application also include the following circumstances, which will result in the following reduction of the period of adjustment set forth in § 1.703 to the extent that the periods are not overlapping:
>
> (10) Submission of an amendment under § 1.312 or other paper after a notice of allowance has been given or mailed, in which case the period of adjustment set forth in § 1.703 shall be reduced by the lesser of:
>
> (i) The number of days, if any, beginning on the date the amendment under § 1.312 or other paper was filed and ending on the mailing date of the Office action or notice in response to the amendment under § 1.312 or such other paper; or
>
> (ii) Four months; …

On December 5, 2007, patentee filed an information disclosure statement (IDS). On December 6, 2007, the examiner mailed a NOTICE OF NON-COMPLIANT INFORMATION DISCLOSURE STATEMENT. The period of reduction of 112 days entered does not appreciate that the Office mailed a response on December 6, 2007. Given the date of mailing of the response, a period of reduction of 2 days should have been entered for the period beginning on December 5, 2007 and ending on December 6, 2007. Accordingly, the period of reduction of 112 days is being removed and a period of reduction of 2 days is being entered.

In view thereof, the patent term adjustment indicated on the patent should be EIGHT HUNDRED FOURTEEN (814) days.

The Office acknowledges submission of the $200.00 fee set forth in 37 CFR 1.18(e). No additional fees are required.

The application file is being forwarded to the Certificates of Correction Branch for issuance of a certificate of correction in order to rectify this error. The Office will issue a certificate of correction indicating that the term of the above-

identified patent is extended or adjusted by EIGHT HUNDRED FOURTEEN (814) days.

Telephone inquiries specific to this matter should be directed to the undersigned at (571) 272-3219.

Nancy Johnson
Senior Petitions Attorney
Office of Petitions

Enclosure: Copy of DRAFT Certificate of Correction

UNITED STATES PATENT AND TRADEMARK OFFICE

CERTIFICATE OF CORRECTION

PATENT : 7,350,184 B2

DATED : **March 25, 2008** **DRAFT**

INVENTOR(S) : Upton

It is certified that error appears in the above-identified patent and that said Letters Patent is hereby corrected as shown below:

On the cover page,

[*] Notice: Subject to any disclaimer, the term of this patent is extended or adjusted under 35 USC 154(b) by 704 days

Delete the phrase "by 704 days" and insert – by 814 days--

UNITED STATES PATENT AND TRADEMARK OFFICE

Commissioner for Patents
United States Patent and Trademark Office
P.O. Box 1450
Alexandria, VA 22313-1450
www.uspto.gov

NEXSEN PRUET, LLC
PO DRAWER 2426
COLUMBIA SC 29202-2426

COPY MAILED

NOV 1 0 2008

OFFICE OF PETITIONS

In re Patent No. 6,799,500
Application No. 10/409,755
Filed: April 9, 2003
Issued: October 5, 2004
Attorney Docket No. 23532-76

ON PETITION

This is a decision on the petitions filed December 10, 2007 and October 20, 2008, which are being treated as a request under 37 CFR 3.81(b)[1] to add the name of the assignee on the front page of the above-identified patent by way of a Certificate of Correction.

The request is **GRANTED**.

Petitioner has requested two options for adding the assignee on the front page of the above identified patent. However, 37 CFR 3.81(b) permits the patent to issue in the name and correct address of an assignee if the assignment was submitted after payment of the issue fee but ***prior to issuance of a patent***. Petitioner has submitted a copy of assignment records disclosing that an assignment correcting the assignee's name from "FN Manufacturing, INC." to "FN Manufacturing, LLC)" was recorded on January 18, 2005, which is after the date of issuance of this patent. Therefore, since the assignment was not submitted for recordation until after issuance of this patent, issuance of a certificate of correction to "FN Manufacturing, LLC" would not be proper. *See* MPEP Section 307. Accordingly, the other option requested by petitioner to add the assignee "FN Manufacturing, INC." will be accepted.

This matter is being referred to the Certificates of Correction Branch for issuance of the requested Certificate of Correction.

Telephone inquiries concerning this decision may be directed to Joan Olszewski at (571) 272-7751. Inquiries regarding the issuance of a certificate of correction should be directed to the Certificate of Correction Branch at (571) 272-4200.

/Liana Walsh/
Liana Walsh
Petitions Examiner
Office of Petitions

[1] *See* MPEP 1309, subsection II; and Official Gazette of June 22, 2004.

UNITED STATES PATENT AND TRADEMARK OFFICE

Commissioner for Patents
United States Patent and Trademark Office
P.O. Box 1450
Alexandria, VA 22313-1450
www.uspto.gov

WOMBLE CARLYLE SANDRIDGE & RICE
P.O. BOX 7037
ATLANTA, GA 30357-0037

COPY MAILED

APR 21 2005

OFFICE OF PETITIONS

In re Application of :
Frederick G. Hale et al :
Application No. 10/409,767 : ON PETITION
Filed: April 9, 2003 :
Attorney Docket No. M215 1010.1 :

This is a decision on the petition, filed October 7, 2004, to change the name of the second named inventor.

The petition is granted.

The name of one of the named inventors will be changed from "Laura Blume Botta" to "Laura Kaye Blume."

A copy of the corrected filing receipt is enclosed.

Telephone inquiries concerning this matter may be directed to Wan Laymon at (571) 272-3220.

This matter is being referred to Publishing Division to await a reply to the Notice of Allowance and Fee(s) mailed March 24, 2005.

Wan Laymon
Wan Laymon
Petitions Examiner
Office of Petitions
Office of the Deputy Commissioner
for Patent Examination Policy

Enclosure: Corrected Filing Receipt

UNITED STATES PATENT AND TRADEMARK OFFICE

COMMISSIONER FOR PATENTS
UNITED STATES PATENT AND TRADEMARK OFFICE
P.O. BOX 1450
ALEXANDRIA, VA 22313-1450
www.uspto.gov

Clifford Lynn Gibbs
703 Doris Lane
Gunter, TX 75058

In re Application of :
Gibbs et al. :
Application No. 10/409,784 :
Filed: April 8, 2003 :
Title of Invention: MICROBIAL :
GENERATOR FOR BIOAUGMENTATION OF :
WASTEWATER STREAMS, WASTEWATER :
BODIES, GROUNDWATERS AND OTHER :
AQUEOUS DISCHARGES :

COPY MAILED

SEP 15 2005

OFFICE OF PETITIONS

This is a decision in response to the petition filed under the unintentional provisions of 37 CFR 1.137(f), filed July 11, 2005, to revive the above-identified application. The petition is properly treated under 37 CFR 1.137(b).

This Petition is hereby **granted**.

The above-identified application became abandoned for failure to timely and properly reply to the non-final Office action, mailed December 15, 2004. The Office action set a three (3) month period for reply, and provided for extensions of time under 37 CFR 1.136(a). No reply having been received, the application became abandoned on March 16, 2005. A Notice of Abandonment was mailed on June 20, 2005.

With the instant petition, Petitioner has satisfied the requirements of a grantable petition under 37 CFR 1.137(b). A response to the December 15, 2004 Office action is filed with the instant petition. Accordingly, the petition is granted.

This application is being forwarded to Technology Center Art Unit 1724 for processing of the response, filed July 11, 2005, in due course.

Telephone inquiries concerning this matter should be directed to the undersigned at (571) 272-3232.

Derek L. Woods
Petitions Attorney
Office of Petitions

UNITED STATES PATENT AND TRADEMARK OFFICE

Commissioner for Patents
United States Patent and Trademark Office
P.O. Box 1450
Alexandria, VA 22313-1450
www.uspto.gov

Paper No. 7

OWENS-ILLINOIS, INC.
ONE SEAGATE, 25-LDP
TOLEDO, OH 43666

COPY MAILED

NOV 2 9 2004

OFFICE OF PETITIONS

ON PETITION

In re Application of :
Wing-Kwong Keung, et al. :
Application No. 10/409,793 :
Filed: April 8, 2003 :
Attorney Docket No. 18004 USA :

This is a decision on the petition under 37 CFR 1.137(b), filed September 28, 2004, to revive the above-identified application.

The petition is **GRANTED.**

The above-identified application became abandoned for failure to reply in a timely manner to the non-final Office action mailed January 20, 2004, which set a shortened statutory period for reply of three (3) months. No extensions of time under the provisions of 37 CFR 1.136(a) were obtained. Accordingly, the application became abandoned on April 21, 2004.

It is not apparent whether the person signing the statement of unintentional delay was in a position to have firsthand or direct knowledge of the facts and circumstances of the delay at issue. Nevertheless, such statement is being treated as having been made as the result of a reasonable inquiry into the facts and circumstances of such delay. See 37 CFR 10.18(b) and Changes to Patent Practice and Procedure; Final Rule Notice, 62 Fed. Reg. 53131, 53178 (October 10, 1997), 1203 Off. Gaz. Pat. Office 63, 103 (October 21, 1997). In the event that such an inquiry has not been made, petitioner must make such an inquiry. If such inquiry results in the discovery that it is not correct that the entire delay in filing the required reply from the due date for the reply until the filing of a grantable petition pursuant to 37 CFR 1.137(b) was unintentional, petitioner must notify the Office.

There is no indication that the person signing the instant petition was ever given a power of attorney or authorization of agent to prosecute the above-identified application. If the person signing the instant petition desires to receive future correspondence regarding this application, the appropriate power of attorney or authorization of agent must be submitted. While a courtesy copy of this decision is being mailed to the person signing the instant petition, all future

correspondence will be directed to the address currently of record until such time as appropriate instructions are received to the contrary.

The application file is being forwarded to Technology Center 3700, Art Unit 3748 for further processing.

Telephone inquiries concerning this decision should be directed to the undersigned at (571) 272-3229.

Retta Williams

Retta Williams
Petitions Examiner
Office of Petitions
Office of the Deputy Commissioner
for Patent Examination Policy

cc: Joseph M. Rolnicki
Thompson Coburn LLP
One US Bank Plaza
St. Louis, MO 63101

SPE RESPONSE FOR CERTIFICATE OF CORRECTION

Paper No.: X

DATE : October 02,2007

TO SPE OF : ART UNIT 2826

SUBJECT : Request for Certificate of Correction for Appl. No.: 10/409,804 Patent No.: 7102217 B2

A response is requested with respect to a request for a certificate of correction.

With respect to the change(s) requested to correct Office and/or Applicant's errors, should the patent read as shown in the certificate of correction attached herewith or the COCIN document(s), in IFW images for the above-identified patented application? No new matter should be introduced, nor should the scope or meaning of the claims be changed.

If the response is for an IFW, within 7 days, please complete and forward the response, to the employee (named below) via scanning into application images, using document code **COCX**.

DO NOT SENT TO ATTORNEY

If the response is for a paper file wrapper, please complete the response and forward the response with the paper file wrapper, to the employee (named below), within 7 days, to:

Certificates of Correction Branch (CofC)
South Tower - 9A22
Palm Location 7580

LAMONTE NEWSOME
Certificates of Correction Branch
703-308-9390 ext. 112

Thank You For Your Assistance

The request for issuing the above-identified correction(s) is hereby:
Note your decision on the appropriate box.

- [x] **Approved** — **All** changes apply.
- [ ] **Approved in Part** — Specify below which changes **do not** apply.
- [ ] **Denied** — State the reasons for denial below.

Comments: _____

Sue Purvis — **SPE**

2826 — **Art Unit**

UNITED STATES PATENT AND TRADEMARK OFFICE

Commissioner for Patents
United States Patent and Trademark Office
P.O. Box 1450
Alexandria, VA 22313-1450
www.uspto.gov

COPY MAILED
NOV 13 2006
OFFICE OF PETITIONS

AMGEN INC.
MAIL STOP 28-2-C
ONE AMGEN CENTER DRIVE
THOUSAND OAKS CA 91320-1799

In re Application of	:	
Olaf Kinstler et al	:	
Application No. 10/409,807	:	ON PETITION
Filed: April 7, 2003	:	
Attorney Docket No. A-682A	:	

This is a decision on the petition, filed November 13, 2006, under 37 CFR 1.313(c)(2) to withdraw the above-identified application from issue after payment of the issue fee.

The petition is **GRANTED.**

The above-identified application is withdrawn from issue for consideration of a submission under 37 CFR 1.114 (request for continued examination). See 37 CFR 1.313(c)(2).

Petitioner is advised that the issue fee paid on August 2, 2006, in the above-identified application cannot be refunded. If, however, the above-identified application is again allowed, petitioner may request that it be applied towards the issue fee required by the new Notice of Allowance.[1]

Telephone inquiries should be directed to the undersigned at (571) 272-3208.

The examiner of Technology Center AU 1654 will consider the request for continued examination under 37 CFR 1.114.

Karen Creasy
Petitions Examiner
Office of Petitions

---

[1] The request to apply the issue fee to the new Notice may be satisfied by completing and returning the new Issue Fee Transmittal Form PTOL-85(b), which includes the following language thereon: "Commissioner for Patents is requested to apply the Issue Fee and Publication Fee (if any) or re-apply any previously paid issue fee to the application identified above." Petitioner is advised that, whether a fee is indicated as being due or not, the Issue Fee Transmittal Form **must** be completed and timely submitted to avoid abandonment. Note the language in bold text on the first page of the Notice of Allowance and Fee(s) Due (PTOL-85).

UNITED STATES PATENT AND TRADEMARK OFFICE

Commissioner for Patents
United States Patent and Trademark Office
P.O. Box 1450
Alexandria, VA 22313-1450
www.uspto.gov

AMGEN INC.
MAIL STOP 28-2-C
ONE AMGEN CENTER DRIVE
THOUSAND OAKS CA 91320-1799

COPY MAILED

JUL 16 2007

OFFICE OF PETITIONS

In re Application of Kinstler et al. Application No. 10/409,807 Filed: April 7, 2003 Attorney Docket Number: A-682 Title of Invention: Chemically Modified Novel Erythropoietin Stimulating Protein Compositions and Methods	DECISION ON PETITION

This is a decision on the petition filed June 11, 2007, under 37 CFR 1.137(b) to revive the above-identified application.

This application became abandoned for failure to timely submit the issue and publication fees, as required by the Notice of Allowance and Fee (s) Due which was mailed January 3, 2007. The Notice of Allowance and Fee (s) Due set a three (3) month statutory period for reply. Extensions of time were not available under the provisions of 37 CFR 1.136(a). Accordingly, this application became abandoned on April 4, 2007. A Notice of Abandonment was mailed on May 2, 2007.

The statement of unintentional delay presented in the petition does not comply with the current rule. Pursuant to 37 CFR 1.137(b)(3) a statement that "the entire delay in filing the required reply from the due date for the reply until the filing of a grantable petition pursuant to 37 CFR 1.137(b) was unintentional" is required. However, the statement presented will be accepted and construed as the statement required by 37 CFR 1.137(b)(3). Petitioner must notify the Office if this is **not** a correct interpretation of the statement contained in the instant petition.

The requirements for a grantable petition under 37 CFR 1.137(b) have been met. This petition is hereby **Granted**.

This application is being forwarded to the Office of Patent Publication for processing into a patent.

Telephone inquiries should be directed to the undersigned at (571) 272-3215.

Charlema R. Grant

Charlema R. Grant
Petitions Attorney
Office of Petitions

UNITED STATES PATENT AND TRADEMARK OFFICE

Commissioner for Patents
United States Patent and Trademark Office
P.O. Box 1450
Alexandria, VA 22313-1450
www.uspto.gov
DIW 11-04

FULBRIGHT & JAWORSKI, LLP
1301 MCKINNEY
SUITE 5100
HOUSTON TX 77010-3095

COPY MAILED

NOV 24 2004

OFFICE OF PETITIONS

In re Application of	:	
Derand et al.	:	
Application No. 10/409,820	:	DECISION ON PETITION
Filed: 9 April, 2003	:	
Attorney's Docket No. HO-P02439US1	:	

This is a decision on the petition under 37 CFR 1.182, filed on 13 September, 2004, to change the second named inventor's last name.

The petition is **DISMISSED**.

Petitioners state that the second inventor's last name was changed as a result of marriage, and have provided an affidavit stating such signed by the inventor using only her married name.

The petition must be dismissed because petitioners have not provided sufficient evidence of the name change. An acceptable showing must be either a declaration signed with **both** names with an explanation of how the name change was effected (marriage, divorce, etc.), or a certified copy of a court order for the name change.

This dismissal is without prejudice to reconsideration pending submission of a proper showing as described above.

Further correspondence with respect to this matter should be addressed as follows:

By mail: Mail Stop Petition
Commissioner for Patents
P.O. Box 1450
Alexandria, VA 22313-1450

By FAX: (703) 872-9306
Attn: Office of Petitions

By hand: U.S. Patent and Trademark Office
220 20th Street S.
Customer Window, Mail Stop Petition
Crystal Plaza 2, Lobby, Room 1B03
Arlington, VA 22202

Telephone inquiries concerning this matter may be directed to the undersigned at (571) 272-3231.

D Wood

Douglas I. Wood
Senior Petitions Attorney
Office of Petitions

UNITED STATES PATENT AND TRADEMARK OFFICE

COMMISSIONER FOR PATENTS
UNITED STATES PATENT AND TRADEMARK OFFICE
P.O. BOX 1450
ALEXANDRIA, VA 22313-1450
www.uspto.gov

Paper No.

Scotlund Stivers
c/o H. Keith Dubois
P. O. Box 481
West Branch, WI 48661

COPY MAILED
APR 19 2004
OFFICE OF PETITIONS

In re Application of :
Scotlund Stivers :
Application No. 10/409,830 : ON PETITION
Filed: April 8, 2003 :
Attorney Docket No. N/A :

This is a decision on the petition under 37 CFR 1.137(a), filed February 28, 2004, to revive the above-identified application.

The petition is **DISMISSED.**

Any further petition to revive must be submitted within TWO (2) MONTHS from the mail date of this decision. Extensions of time under 37 CFR 1.136(a) are permitted. The reconsideration request should include a cover letter entitled "Petition under 37 CFR 1.137." This is **not** a final agency action within the meaning of 5 U.S.C.§ 704.

A grantable petition under 37 CFR 1.137(a) must be accompanied by: (1) the required reply, unless previously filed;[1] (2) the petition fee as set forth in 37 CFR 1.17(l); (3) a showing to the satisfaction of the Commissioner that the entire delay in filing the required reply from the due date for the reply until the filing of a grantable petition pursuant to 37 CFR 1.137(a) was unavoidable; and (4) any terminal disclaimer (and fee as set forth in 37 CFR 1.20(d)) required pursuant to 37 CFR 1.137(c). The instant petition lacks item (3).

A Notice to File Corrected Application Papers (hereinafter "Notice") was mailed to applicant on June 2, 2003, setting a two-month period within which to submit a reply. Since no reply was

[1] In a nonprovisional application abandoned for failure to prosecute, the required reply may be met by the filing of a continuing application. In an application or patent, abandoned or lapsed for failure to pay the issue fee or any portion thereof, the required reply must be the payment of the issue fee or any outstanding balance thereof.

received and no extensions of time under the provisions of 37 CFR 1.136 were obtained, the application became abandoned on August 3, 2003.

The showing of record is not sufficient to establish to the satisfaction of the Commissioner that the delay was unavoidable within the meaning of 35 U.S.C. § 151 and 37 CFR 1.137(a).

Petitioner alleges that the Notice was never received due to the unusual mail forwarding practice he has in place. While the Office is sympathetic to petitioner's situation, petitioner does not provide any evidence to support the allegation of non-receipt. MPEP 711.03(c) in pertinent part states:

> "The showing required to establish nonreceipt of an Office communication must include a statement from the practitioner stating that the Office communication was not received by the practitioner and attesting to the fact that a search of the file jacket and docket records indicates that the Office communication was not received. A copy of the docket record where the nonreceived Office communication would have been entered had it been received and docketed must be attached to and referenced in practitioner's statement...
>
> The showing outlined above may not be sufficient if there are circumstances that point to a conclusion that the Office action may have been lost after receipt rather than a conclusion that the Office action was lost in the mail (e.g., if the practitioner has a history of not receiving Office actions.)"

By petitioner's own admission, numerous correspondences mailed to petitioner, have not been received. In view of the above and petitioner's statement, it can be reasonably concluded that the Notice was lost it was received at the address where petitioner received his mail. Accordingly, this does not constitute unavoidable delay.

Petitioner should consider filing a petition stating that the delay was unintentional. Public Law 97-247, § 3, 96 Stat. 317 (1982), which revised patent and trademark fees, amended 35 U.S.C. § 41(a)(7) to provide for the revival of an "unintentionally" abandoned application without a showing that the delay in prosecution or in late payment of the issue fee was "unavoidable." This amendment to 35 U.S.C. § 41(a)(7) has been implemented in 37 CFR 1.137(b). An "unintentional" petition under 37 CFR 1.137(b) must be accompanied by the $665 petition fee.

The filing of a petition under 37 CFR 1.137(b) cannot be intentionally delayed and therefore must be filed promptly. A person seeking revival due to unintentional delay cannot make a statement that the delay was unintentional unless the entire delay, including the date it was discovered that the application was abandoned until the filing of the petition to revive under 37 CFR 1.137(b), was unintentional. A statement that the delay was unintentional is not appropriate if petitioner intentionally delayed the filing of a petition for revival under 37 CFR 1.137(b).

Further correspondence with respect to this matter should be addressed as follows:

By Mail: Mail Stop PETITION
Commissioner for Patents
Post Office Box 1450
Alexandria, VA 22313-1450

Effective December 1, 2003, the Office of Petitions can no longer receive hand-carried correspondence, or facsimile transmissions of correspondence. The centralized location for hand-carried correspondence is the Customer Window located at:

2011 South Clark Place
Crystal Plaza Two Lobby
Room 1B03
Arlington, VA 22202

The centralized facsimile number is **(703) 872-9306.**

Telephone inquiries concerning this decision should be directed to the undersigned at (703) 306-3475.

Marianne E. Morgan
Petitions Examiner
Office of Petitions
Office of the Deputy Commissioner
for Examination Policy

UNITED STATES PATENT AND TRADEMARK OFFICE

COMMISSIONER FOR PATENTS
UNITED STATES PATENT AND TRADEMARK OFFICE
P.O. BOX 1450
ALEXANDRIA, VA 22313-1450
www.uspto.gov

Scotlund Stivers
c/o H. Keith Dubois
P. O. Box 481
West Branch, WI 48661

COPY MAILED

JAN 1 1 2005

OFFICE OF PETITIONS

In re Application of	:	
Scotlund Stivers	:	
Application No. 10/409,830	:	ON PETITION
Filed: April 8, 2003	:	
Attorney Docket No. N/A	:	

This is a decision on the petition under 37 CFR 1.137(b), filed October 13, 2004, to revive the above-identified application.

The petition is **GRANTED**.

Telephone inquiries concerning this decision should be directed to the undersigned at (571) 272-3223.

The application file is being referred to the Office of Initial Patent Examination for further processing.

Marianne E. Jenkins
Petitions Examiner
Office of Petitions
Office of the Deputy Commissioner
for Patent Examination Policy

UNITED STATES PATENT AND TRADEMARK OFFICE

COMMISSIONER FOR PATENTS
UNITED STATES PATENT AND TRADEMARK OFFICE
P.O. BOX 1450
ALEXANDRIA, VA 22313-1450
www.uspto.gov

MAILED

SEP 27 2006

DIRECTOR'S OFFICE
TECHNOLOGY CENTER 2600

SCHWEGMAN, LUNDBERG, WOESSNER & KLUTH, P.A.
P.O. BOX 2938
MINNEAPOLIS MN 55402

In re Application of
SOLL, DAVID R., et al
Serial No.: **10/409,838**
Filed: April 9, 2003
For: **RECONSTRUCTION AND MOTION ANALYSIS OF AN EMBRYO**

DECISION ON PETITION
ACCEPTANCE OF COLOR DRAWINGS

This is a decision on the petition under 37 C.F.R. § 1.84(b)(2), filed, April 9, 2003, requesting acceptance of color drawings.

A grantable petition under 37 C.F.R. §1.84(a)(2) must be accompanied by a fee set forth under 37 C.F.R. § 1.17(h), 3(three) set of the color drawings in question, and the specification must contain, or be amended to contain, the following language as the first paragraph in that portion of the specification relating to the brief description of the drawings:

"The file of this patent contains at least one drawing executed in color. Copies of this patent with color drawing(s) will be provided by the Patent and Trademark Office upon request and payment of the necessary fee."

The petition was filed without the specification containing or an amendment to contain the language mentioned in the paragraph above.

The petition is **DENIED.**

Any request for reconsideration must be filed within **TWO MONTHS** of the date of this decision and include correction of the deficiency outlined above. The application will be held in the Technology Center for two months to await any request for reconsideration of this decision.

Dwayne Bost
Special Program Examiner
Technology Center 2600
Communications

UNITED STATES PATENT AND TRADEMARK OFFICE

COMMISSIONER FOR PATENTS
UNITED STATES PATENT AND TRADEMARK OFFICE
P.O. BOX 1450
ALEXANDRIA, VA 22313-1450
www.uspto.gov

Paper No. 5

DALY, CROWLEY & MOFFORD, LLP
SUITE 101
275 TURNPIKE STREET
CANTON, MA 02021-2310

COPY MAILED
DEC 17 2003
OFFICE OF PETITIONS

In re Application of
Kohnen, Casalegno, Monte, and Slater
Application No.: 10/409,844
Filed: April 9, 2003
Attorney Docket No: RTN-190PUS
For: HIGH RESOLUTION HIGN DYNAMIC RANGE ANALOGTO-DIGITAL CONVERTER SYSTEM AND RELATED TECHNIQUES

: DECISION ACCORDING RULE 47(a) STATUS

This is in response to the petition under 37 CFR 1.47(a), filed November 26, 2003.

The petition is **GRANTED**.

The above-identified application and papers have been reviewed and found in compliance with 37 CFR 1.47(a). This application is hereby accorded Rule 1.47(a) status.

The above-cited application was filed on April 9, 2003, and was accompanied by a declaration executed by only inventors Casalegno, Monte, and Slater . A Notice to File Missing Parts of Nonprovisional Application was mailed on May 30, 2003, requiring a properly executed declaration and $130.00 surcharge. The notice allowed an extendable period for reply of two months from its mailing date. On November 26, 2003, the instant petition was filed along with a request for an extension of time within the fourth month.

Petitioner has shown that inventor Kohnen has refused to join the filing of the above-identified application after having been presented with the application papers. The above-identified application and papers have been reviewed and found in compliance with 37 CFR 1.47(a). This application is hereby accorded Rule 1.47(a) status.

As provided in Rule 1.47(c), this Office will forward notice of this application's filing to the non-signing inventor at the addresses given in the petition. Notice of the filing of this application will also be published in the Official Gazette.

Deposit account 50-0845 will be charged $130.00 for the surcharge.

This application will be forwarded to the Office of Initial Patent Examination for further processing.

Telephone inquiries should be directed to the undersigned at (703) 305-0010.

Kenya A. McLaughlin
Petitions Attorney
Office of Petitions

UNITED STATES PATENT AND TRADEMARK OFFICE

COMMISSIONER FOR PATENTS
UNITED STATES PATENT AND TRADEMARK OFFICE
P.O. BOX 1450
ALEXANDRIA, VA 22313-1450
www.uspto.gov

Kirk Kohnen
1630 Via Linda
Fullerton, CA 92833

COPY MAILED
DEC 17 2003
OFFICE OF PETITIONS

In re Application of
Kohnen, Casalegno, Monte, and Slater :
Application No. 10/409,844 :
Filed: April 9, 2003 : LETTER
Attorney Docket Number: RTN-190PUS :
For: HIGH RESOLUTION HIGH DYNAMIC :
ANALOGTO-DIGITAL CONVERTER SYSTEM :
AND RELATED TECHNIQUES

Dear Mr. Kohnen:

You are named as a joint inventor in the above-identified United States patent application filed under the provisions of 35 U.S.C. 116 (United States Code) and 37 CFR 1.47(a), Rules of Practice in Patent Cases. Should a patent be granted on the application you will be designated therein as a joint inventor.

As a joint inventor, you are entitled to inspect any paper in the file wrapper of the application, order copies of all or any part thereof (at a prepaid cost per 37 CFR 1.19) or make your position of record in the application. Alternatively, you may arrange to do any of the preceding through a registered patent attorney or agent presenting written authorization from you. If you care to join the application, counsel of record (see below) would presumably assist you. Joining in the application would entail the filing of an appropriate oath or declaration by you pursuant to 37 CFR 1.63.

Telephone inquiries regarding this communication should be directed to Petitions Attorney Kenya A. McLaughlin at (703) 305-0010. Requests for information regarding your application should be directed to the File Information Unit at (703) 308-2733. Information regarding how to pay for and order a copy of the application, or a specific paper in the application, should be directed to Certification Division at (703) 308-9726 or 1-800-972-6382 (outside the Washington D.C. area).

Kenya A. McLaughlin

Kenya A. McLaughlin
Petitions Attorney
Office of Petitions

Daly, Crowley & Mofford, LLP
Suite 101
275 Turnpike Street
Canton, MA 02021-2310

UNITED STATES PATENT AND TRADEMARK OFFICE

COMMISSIONER FOR PATENTS
UNITED STATES PATENT AND TRADEMARK OFFICE
P.O. BOX 1450
ALEXANDRIA, VA 22313-1450
www.uspto.gov

DALY, CROWLEY & MOFFORD, LLP
SUITE 101
275 TURNPIKE STREET
CANTON MA 02021-2310

COPY MAILED

FEB 27 2004

OFFICE OF PETITIONS

In re Application of
Kohnen, et al.
Application No. 10/409,844
Filed: April 9, 2003
Attorney Docket No. RTN-190PUS
For: HIGH RESOLUTION, HIGH DYNAMIC RANGE ANALOG-TO-DIGITAL CONVERTER SYSTEM AND RELATED TECHNIQUES

DECISION ON PETITION

This is a decision on the petition under 37 CFR 1.182 filed January 21, 2004 (certificate of mailing date January 16, 2004), to change the order of inventorship.

The petition is GRANTED.

The order of inventors will be:

JAMES WILLIAM CASALEGNO
FRANK PHILLIP MONTE
ERIC KENT SLATER
KIRK K. KOHNEN

A replacement filing receipt is enclosed.

After the mailing of this decision, the application file will be forwarded to Technology Center 2800 for examination in due course.

Telephone inquiries concerning this matter may be directed to the undersigned at (703) 308-6712.

E. Shirene Willis

E. Shirene Willis
Senior Petitions Attorney
Office of Petitions

enclosure: replacement filing receipt

SPE RESPONSE FOR CERTIFICATE OF CORRECTION

Paper No.: _____

DATE : July 10, 2006

TO SPE OF : ART UNIT 2819

SUBJECT : Request for Certificate of Correction for Appl. No.: 10/409844 Patent No.: 6,784,820

Please respond to this request for a certificate of correction within 7 days.

Please review the requested changes/corrections as shown in the **COCIN** document(s) in the IFW application image. No new matter should be introduced, nor should the scope or meaning of the claims be changed.

Please complete the response (see below) and forward the completed response to scanning using document code **COCX**.

Magdalene Talley

Certificates of Correction Branch

703-308-9390 ext. 116

Thank You For Your Assistance

The request for issuing the above-identified correction(s) is hereby:

Note your decision on the appropriate box.

- ☒ **Approved** — **All** changes apply.
- ☐ **Approved in Part** — Specify below which changes **do not** apply.
- ☐ **Denied** — State the reasons for denial below.

Comments: No new matter

[signature] 2819

SPE **Art Unit**

PTOL-306 (REV. 7/03) U.S. DEPARTMENT OF COMMERCE Patent and Trademark Office

SPE: M. Lee

SPE RESPONSE FOR CERTIFICATE OF CORRECTION

Paper No.: _____

DATE : 6/11/07

TO SPE OF : ART UNIT 2876

SUBJECT : Request for Certificate of Correction for Appl. No.: 10/409,848 Patent No.: 7178718

Please respond to this request for a certificate of correction within 7 days.

Please review the requested changes/corrections as shown in the **COCIN** document(s) in the IFW application image. No new matter should be introduced, nor should the scope or meaning of the claims be changed.

Please complete the response (see below) and forward the completed response to scanning using document code **COCX**.

Lamonte M. Newsome
Certificates of Correction Branch
703-308-9390 ext. 112

Thank You For Your Assistance

The request for issuing the above-identified correction(s) is hereby:
Note your decision on the appropriate box.

- ☑ **Approved** — All changes apply.
- ☐ **Approved in Part** — Specify below which changes **do not** apply.
- ☐ **Denied** — State the reasons for denial below.

Comments: The Request for Certificate of Correction filed 6/8/07 for the purpose of correcting informalities/typographical errors. Accordingly, the Request has been considered and approved.

MICHAEL G. LEE 2876
SPE SUPERVISORY PATENT EXAMINER Art Unit
TECHNOLOGY CENTER 2800

PTO/SB/44 (02-01)
Approved for use through 01/31/2004. OMB 0651-0033
U.S. Patent and Trademark Office; U.S. DEPARTMENT OF COMMERCE
Under the Paperwork Reduction Act of 1995, no persons are required to respond to a collection of information unless it displays a valid OMB control number.
(Also Form PTO-1050)

UNITED STATES PATENT AND TRADEMARK OFFICE
CERTIFICATE OF CORRECTION

PATENT NO : 7,178,718 (10/409,848)

DATED : February 20, 2007

INVENTOR(S) : Kia Silverbrook, Paul Lapstun and Simon Robert Walmsley

It is certified that error appears in the above-identified patent and that said Letters Patent is hereby corrected as shown below:

Column 60, line 41 should read:
--ID identifying a class of said product item, (ii) a serial number--

Column 60, line 50 should read:
--relative to the interface surface, sensing at least--

Column 61, line 24 should read:
--between the user and the product item.--

Column 61, line 26 should read:
--interaction is selected from the group comprising:--

Column 61, line 52 should read:
--(i) current owner; and--

Column 62, line 28 should read:
--a portion of the coded data is superimposed with a visual--

Column 64, line 55 should read:
--including n identical sub-layouts rotated l/n revolutions--

Approved! 6/20/07

Kia Silverbrook
Managing Director
Silverbrook Research Pty Ltd

MAILING ADDRESS OF SENDER: Mr Kia Silverbrook
Silverbrook Research Pty Ltd
393 Darling Street
Balmain NSW 2041
Australia

PATENT NO. 7,178,718

No. of additional copies

Burden Hour Statement: This form is estimated to take 1.0 hour to complete. Time will vary depending upon the needs of the individual case. Any comment on the amount of time you are required to complete this form should be sent to the Chief Information Officer, U.S. Patent and Trademark Office, Washington, DC 20231. DO NOT SEND FEES OR COMPLETED FORMS TO THIS ADDRESS. SEND TO: Assistant Commissioner for Patents, Washington, DC 20231.

UNITED STATES PATENT AND TRADEMARK OFFICE

COMMISSIONER FOR PATENTS
UNITED STATES PATENT AND TRADEMARK OFFICE
P.O. BOX 1450
ALEXANDRIA, VA 22313-1450
WWW.USPTO.GOV

Paper No. None

SILVERBROOK RESEARCH PTY LTD
393 DARLING STREET
BALMAIN NSW 2-041 AU AUSTRALIA

COPY MAILED
SEP 11 2006
OFFICE OF PETITIONS

In re Application of	:	
Paul Lapstun	:	
Application No. 10/409,864	:	DECISION ON PETITION UNDER
Filed: April 9, 2003	:	37 C.F.R. §1.137(B)
Attorney Docket Number:	:	
NPT019US	:	
Title: ORIENTATION-INDICATING	:	
CYCLIC POSITION CODES	:	

This is a decision on the petition filed June 7, 2006, under 37 C.F.R. §1.137(b)[1], to revive the above-identified application.

The above-identified application became abandoned for failure to submit the issue and publication fees in a timely manner in reply to the Notice of Allowance and Issue Fee Due, mailed June 14, 2004, which set a shortened statutory period for reply of three months. No extensions of time are permitted for transmitting issue fees or publication fees[2]. On June 25, 2004, a check was received, however this check could not be cashed. Accordingly, the above-identified application became abandoned

1 A grantable petition pursuant to 37 C.F.R 1.137(b) must be accompanied by:
(1) The reply required to the outstanding Office action or notice, unless previously filed;
(2) The petition fee as set forth in § 1.17(m);
(3) A statement that the entire delay in filing the required reply from the due date for the reply until the filing of a grantable petition pursuant to this paragraph was unintentional. The Commissioner may require additional information where there is a question whether the delay was unintentional, and;
(4) Any terminal disclaimer (and fee as set forth in § 1.20(d)) required pursuant to paragraph (d) of this section.

2 See MPEP §710.02(e).

on September 15, 2004. A Notice of Abandonment was mailed on February 22, 2006.

With the present petition, Petitioner has submitted the petition fee, the proper statement of unintentional delay, and the issue and publication fees. A terminal disclaimer is not required.

As such, the petition under 37 C.F.R. §1.137(b) is **GRANTED**.

The Office of Patent Publications will be notified of this decision, for further processing into a patent.

Telephone inquiries regarding *this decision* should be directed to the undersigned at (571) 272-3225[3]. The phone number for the Office of Patent Publication is (571) 272-4200.

Paul Shanoski
Senior Attorney
Office of Petitions
United States Patent and Trademark Office

3 Petitioner will note that all practice before the Office should be in writing, and the action of the Office will be based exclusively on the written record in the Office. See 37 C.F.R. §1.2. As such, Petitioner is reminded that no telephone discussion may be controlling or considered authority for Petitioner's further action(s).

UNITED STATES PATENT AND TRADEMARK OFFICE

COMMISSIONER FOR PATENTS
UNITED STATES PATENT AND TRADEMARK OFFICE
P.O. BOX 1450
ALEXANDRIA, VA 22313-1450
www.uspto.gov

MAR 8 - 2004

#5

THOMPSON COBURN, LLP
ONE US BANK PLAZA
SUITE 3500
ST LOUIS MO 63101

In re Application of	:	
Scheller et al	:	
Serial No.: 10/409,874	:	DECISION ON PEITITON
Filed: April 9, 2003	:	TO MAKE SPECIAL
For: Directional Laser Probe	:	

This is in response to applicants' petition filed December 17, 2003, to make the above-identified application special under the provisions of 37 CFR 1.102(d), based on infringement.

Applicant has satisfied the provisions set forth in M.P.E.P. 708.02, II. Therefore the petition is **GRANTED**.

The application will be forwarded to the examiner for action on the merits commensurate with this decision.

Should there be any questions with regard to this letter please contact John Kittle by letter addressed to the Director, Technology Center 3700/2900, P.O. Box 1450, Alexandria, VA 22313-1450, or by telephone at (703)308-0873 or by facsimile transmission at (703)308-3139.

John E. Kittle
Director
Technology Center 3700/2900

UNITED STATES PATENT AND TRADEMARK OFFICE

UNITED STATES DEPARTMENT OF COMMERCE
United States Patent and Trademark Office
Address: COMMISSIONER FOR PATENTS
P.O. Box 1450
Alexandria, Virginia 22313-1450
www.uspto.gov

GATES & COOPER LLP
HOWARD HUGHES CENTER
6701 CENTER DRIVE WEST, SUITE 1050
LOS ANGELES, CA 90045

Mail Date: 04/21/2010

Applicant	: Erin H. Sibley	: DECISION ON REQUEST FOR
Patent Number	: 7584493	: RECALCULATION of PATENT
Issue Date	: 09/01/2009	: TERM ADJUSTMENT IN VIEW
Appliction No	: 10/409,875	: OF WYETH AND NOTICE OF INTENT TO
Filed	: 04/09/2003	: ISSUE CERTIFICATE OF CORRECTION
		:

The Request for Recalculation is **GRANTED** to the extent indicated.

The patent term adjustment has been determined to be **1379** days. The USPTO will *sua sponte* issue a certificate of correction reflecting the amount of PTA days determined by the recalculation.

Prior to the issuance of the certificate of correction, the USPTO will afford patentee an opportunity to be heard and request reconsideration. Accordingly, patentee has **one month or thirty (30) days**, whichever is longer, to file a request for reconsideration of this patent term adjustment calculation. See 35 U.S.C. 154(b)(3)(B)(ii) and 37 CFR 1.322(a)(4). No extensions of time will be granted under 37 CFR 1.136.

Patentee should use document code PET.OP if electronically filing a request for reconsideration of this patent term adjustment calculation. The patentee must also include the information required by 37 CFR 1.705(b)(2) and the fee required by 37 CFR 1.18(e). If patentee does not file a timely request for reconsideration of this patent term adjustment calculation including the information required by 37 CFR 1.705(b)(2) and the fee required by 37 CFR 1.18(e), the USPTO will issue a certificate of correction reflecting the PTA determination noted above.

Patentee should be aware that in order to preserve the right to review in the United States District Court for the District of Columbia of the USPTO patent term adjustment determination, patentee must ensure that he or she also take the steps required under 35 U.S.C. 154(b)(4)(A) in a timely manner. Nothing in the request for recalculation should be construed as providing an alternative time frame for commencing a civil action under 35 U.S.C. 154(b)(4)(A).

Any questions concerning this decision should be directed to the Office of Patent Legal Administration at 571-272-7702.

UNITED STATES PATENT AND TRADEMARK OFFICE

Commissioner for Patents
United States Patent and Trademark Office
P.O. Box 1450
Alexandria, VA 22313-1450
www.uspto.gov

Paper No. 11

BURNS DOANE SWECKER & MATHIS LLP
POST OFFICE BOX 1404
ALEXANDRIA, VA 22413-1404

COPY MAILED

JUL 2 2 2004

OFFICE OF PETITIONS

In re Application of	:
Roger C. Cottrell et al	:
Application No. 10/409,903	: DECISION ON PETITIONS
Filed: April 9, 2003	: UNDER 37 CFR 1.55(c) AND
Attorney Docket No. 033818-011	: 37 CFR 1.183

This is a decision on the petition under 37 CFR 1.55(c), filed October 1, 2003, for acceptance of an unintentionally delayed claim under 35 U.S.C. § 119(a)-(d) for benefit of the filing date of foreign PCT Application No. PCT/US00/27879, filed October 10, 2000. This is also being treated as a petition under 37 CFR 1.183 requesting waiver of 37 CFR 1.55(c) as that rule operates in conjunction with 37 CFR 1.17(t).

The petition under 37 CFR 1.55(c) is **granted**.

The petition under 37 CFR 1.183 is **dismissed**.

PETITION UNDER 37 CFR 1.55(c)

A petition under 37 CFR 1.55(c) to accept an unintentionally delayed claim for priority requires:

(1) The nonprovisional application claiming the benefit of an earlier filing date must be filed on or after November 29, 2000;
(2) the claim submitted with the petition must identify the prior foreign application for which priority is claimed, as well as any foreign application for the same subject matter and having a filing date before that of the application for which priority is claimed, by the application number, country, and the filing date;
(3) the surcharge as set forth in 37 CFR 1.17(t);
(4) a statement that the entire delay between the date the claim was due under 37 CFR 1.55(a)(1) and the date the claim was filed was unintentional. (The Commissioner may require additional information where there is a question whether the delay was unintentional); and
(5) the above-identified nonprovisional application must be filed within 12 months of the filing date of the foreign application.

The instant pending nonprovisional application was filed after November 29, 2000, and did not include a reference to the above-noted PCT application as a foreign application pursuant to the

provisions of 35 U.S.C. § 119(a)-(d) within the later of four months from the actual filing date of the application or sixteen months from the filing date of the prior foreign application. Therefore, since the claim for priority is submitted after the period specified in 37 CFR 1.55(a)(1)(i), this is an appropriate petition under the provisions of 37 CFR 1.55(c).

The above-identified pending nonprovisional application was filed on April 9, 2003, which is after November 29, 2000 and intermediate continuation PCT Application No. PCT/EP01/11573, filed October 8, 2001, was filed within 12 months of October 10, 2000 (the filing date of the foreign application to which benefit is now being claimed). Concurrently with the instant petition, petitioner submitted an Application Data Sheet which identifies the foreign application for which priority is claimed by application number, country and filing date. The required petition fee of $1,330 was received with the petition. Lastly, petitioner has provided an adequate statement of unintentional delay.

All requirements being met, the petition under 37 CFR 1.55(c) to accept an unintentionally delayed claim for priority under 35 U.S.C. § 119(a)-(d) is **granted**.

A filing receipt which includes the claim for foreign priority to the above-noted, prior-filed PCT application, accompanies this decision on petition.

PETITION UNDER 37 CFR 1.183

Petitioner also requests waiver of the applicable surcharge required by 37 CFR 1.55(c)(2) for acceptance of an unintentionally delayed claim for priority on the grounds that "when the present application was filed, the parent and priority application information was included, but was erroneously expressed" and that the "error in expressing the priority information should not, however, delay publication of the application – which is understood to be the purpose of the time limitation set forth in 37 C.F.R. § 1.55(a). Accordingly, a refund of the enclosed fee is respectfully requested."

37 CFR 1.183 states that:

> In an extraordinary situation, when justice requires, any requirement of the regulations in this part which is not a requirement of the statutes may be suspended or waived by the Commissioner or the Commissioner's designee, sua sponte, or on petition of the interested party, subject to such other requirements as may be imposed. Any petition under this section must be accompanied by the petition fee set forth in § 1.17(h).

In order to grant any petition under 37 CFR 1.183, petitioner must show (1) that this is an extraordinary situation where (2) justice requires waiver of the rule. In re Sivertz, 227 U.S.P.Q. 255, 256 (Comm'r Pat. 1985). Petitioner has not shown that either condition exists in this case.

In the instant case, while, as petitioner states, a claim for priority under 35 U.S.C. § 120 to the above-noted, prior-filed PCT application was present on filing of the instant application, petitioner is now seeking, because of his error in indicating the claim for priority as a domestic claim under 35 U.S.C. § 120, to change the previously made domestic claim for priority to a foreign claim for priority under 35 U.S.C. § 119(a)-(d). Had petitioner desired to maintain 35 U.S.C. § 120 benefits to the prior-filed PCT application, then no fee would have been required. However, now the appropriate relief to change the benefit claim of the PCT application from domestic to foreign now requires a petition and fee therefor since the claim for foreign priority was not made within the time period set forth in 37 CFR 1.55(a)(1)(i).

The circumstances of this case do not demonstrate an extraordinary situation, much less one where justice requires waiver of the rules. The failure to timely submit the claim for foreign priority of the earlier application within the time period set forth in 37 CFR 1.55(a)(1)(i) was a circumstance entirely within petitioner's control and could have been avoided by initially filing the claim for foreign priority within the time period specified by the rule. Equitable powers should not be invoked to excuse the performance of a condition by a party that has not acted with reasonable, due care and diligence. U.S. v. Lockheed Petroleum Services, 709 F.2d 1472, 1475 (Fed. Cir. 1983). Furthermore, since the USPTO did not cause or contribute to petitioner's filing delay in claiming foreign priority benefits to the PCT application, this case is even further removed from consideration as one where "justice requires" equitable relief. See Helfgott & Karras, P.C. v. Dickinson, 209 F.3d 1328, 54 USPQ2d 1425 (Fed. Cir. 2000).

It is well settled that a party's inadvertent failure to comply with the requirements of the rules or procedures before the USPTO is not deemed to be an extraordinary situation that would warrant waiver of the rules or procedures under 37 CFR 1.183. *See* Honigsbaum v. Lehman, 903 F. Supp. 8, 37 USPQ2d 1799 (D.D.C. 1995) (Commissioner did not abuse his discretion in refusing to waive requirements of 37 CFR 1.10(c) in order to grant filing date to patent application, where applicant failed to produce "Express Mail" customer receipt or any other evidence that application was actually deposited with USPS as "Express Mail"), *aff'd without opinion*, 95 F.3d 1166 (Fed. Cir.1996); Nitto Chemical Industry. Co., Ltd. v. Comer, 39 USPQ2d 1778, 1782 (D.D.C. 1994) (Commissioner's refusal to waive requirements of 37 CFR 1.10 in order to grant priority filing date to patent application not arbitrary and capricious, because failure to comply with the requirements of 37 CFR 1.10 is an "avoidable" oversight that could have been prevented by the exercise of ordinary care or diligence, and thus not an extraordinary situation under 37 CFR 1.183); Gustafson v. Strange, 227 USPQ 174 (Comm'r Pats. 1985) (Counsel's unawareness of 37 CFR 1.8 not extraordinary situation warranting waiver of a rule). Rather, as petitioner failed to comply with the provisions of 37 CFR 1.55(a)(1)(i), this is not an "extraordinary situation" where "justice requires" an extraordinary remedy.

In view of the above, the petition under 37 CFR 1.183 must be dismissed. Accordingly, the surcharge fee will not be waived and no refund of such fee will be forthcoming.

Acknowledgment is made of receipt on April 14, 2004 of Priority Document No. PCT/US00/27879.

As authorized, the $130 fee for the petition under 37 CFR 1.183 will be charged to petitioner's Deposit Account No. 02-4800.

This application is being forwarded to the Office of Initial Patent Examination for preexamination processing.

Frances Hicks

Frances Hicks
Petitions Examiner
Office of Petitions
Office of the Deputy Commissioner
for Patent Examination Policy
(703) 305-8680

ATTACHMENT: Corrected Filing Receipt

UNITED STATES PATENT AND TRADEMARK OFFICE

Commissioner for Patents
United States Patent and Trademark Office
P.O. Box 1450
Alexandria, VA 22313-1450
www.uspto.gov

CHARLES E. BAXLEY, ESQ.
90 JOHN STREET
THIRD FLOOR
NEW YORK NY 10038

COPY MAILED

JAN 27 2006

OFFICE OF PETITIONS

In re Application of
Cheng et al.
Application No. 10/409,907
Filed: April 8, 2003
Attorney Docket No. 13702 B

DECISION ON PETITION

This is a decision on the petition under 37 CFR 1.137(b), filed December 5, 2005, to revive the above-identified application.

This application became abandoned for failure to timely submit the issue fee, as required by the Notice of Allowance and Fee (s) Due, and submit corrected drawings, as required by the Notice of Allowability both of which were mailed July 15, 2004. The Notice of Allowance and Issue Fee Due and the Notice of Allowability set a three (3) month period for reply. Extensions of time were not available under the provisions of 37 CFR §1.136(a). Accordingly, this application became abandoned on October 16, 2004. A Notice of Abandonment was mailed on November 22, 2004.

The requirements to revive a petition under 37 CFR §1.137(b) have been met. This petition is hereby **Granted**.

This application is being forwarded to the Office of Patent Publication for processing into a patent.

Telephone inquiries concerning this matter should be directed to the undersigned at (571) 272-3215.

Charlema R. Grant
Petitions Attorney
Office of Petitions

UNITED STATES PATENT AND TRADEMARK OFFICE

Commissioner for Patents
United States Patent and Trademark Office
P.O. Box 1450
Alexandria, VA 22313-1450
www.uspto.gov

Brinks Hofer Gilson & Lione
P.O. Box 10395
Chicago, Illinois 60610

COPY MAILED

FEB 24 2006

OFFICE OF PETITIONS

In re	:	
Schmitt	:	
Application NO. 10/409,909	:	RECONSIDERATION OF
Filed: April 9, 2003	:	PATENT TERM ADJUSTMENT
Atty Docket NO. 11371-8	:	

This decision is in response to applicants' "REQUEST FOR RECONSIDERATION OF PATENT TERM ADJUSTMENT PURSUANT TO 37 CFR 1.705(b)" timely[1] filed on January 17, 2006 requesting that the Office adjust the PTA determination at the time of the notice of allowance from a determination of zero (0) days to a determination of fifty-eight (58) days.

Applicant's letter regarding PTA is **Dismissed.**

Applicant asserts that the Office erred in the PTA determination. Applicant agrees with the Office determination of one hundred and forty-eight (148) of Office delay pursuant to 37 CFR 1.702(a)(1). Applicant asserts that the Office erred in failing to provide applicants additional delay for the period beginning on August 6, 2005 and ending on October 19, 1995. Accordingly, the applicants believe there was 222 days of administrative delay. Applicants do not contest the 164 days of reduction under 37 CFR 1.704 (b) and 1.704(c)(7).

Applicants' arguments are not persuasive. The Office is perplexed as to how applicant believed that they were entitled to 74 days of additional Office delay in this application. The file history reflects that applicants filed a response on April 6, 2005 that was noncompliant. The Office submitted a notice of informal amendment on June 17, 2005. Applicant then responded on July 18,

[1]Issue fee paid on January 17, 2006.

2005. Applicant thus failed to engage in reasonable efforts to conclude prosecution of the application by a period of 103 days pursuant to 37 CFR 1.704(c)(7). After the response of July 18, 2005, the Office mailed the notice of allowance on October 19, 2005, within four months of the July 18, 2005 response. Accordingly the Office delay was limited to one hundred and forty-eight (148) days. Applicant failed to engage in reasonable efforts to conclude prosecution of the application by a period of one hundred and sixty-four (164) days. Accordingly, the overall determination of zero (0) (148-164<0) is accurate.

After the mailing of this decision, the application will be forwarded to the Office of Patent Publications for a prompt issuance of the patent.

Any delays in issuing the application more than 4 months after payment of the issue fee and other requirements being satisfied will be reflected in the issue notification letter mailed approximately three weeks prior to issuance of the application.

The Office has assessed the $200.00 fee for the submission of this letter regarding PTA because this letter was a letter of good faith and candor.

Any questions concerning this application should be directed to Kery Fries at 571-272-7757.

Kery Fries

Kery Fries
Senior Legal Advisor
Office of Patent Legal Administration
Office of Deputy Commissioner
for Patent Examination Policy

UNITED STATES PATENT AND TRADEMARK OFFICE

COMMISSIONER FOR PATENTS
UNITED STATES PATENT AND TRADEMARK OFFICE
P.O. BOX 1450
ALEXANDRIA, VA 22313-1450
www.uspto.gov
DIW Nov-07

ANTONY C. EDWARDS
SUITE 200 - 270 HIGHWAY 33 WEST
KELOWNA BC V1X 1X7
CANADA

COPY MAILED
NOV 16 2007
OFFICE OF PETITIONS

In re Application of	:	
David Deck Rendina	:	
Application Number: 10/409911	:	DECISION ON PETITION
Filing Date: 04/08/2003	:	
Attorney Docket Number: ACE-30920	:	

This is a decision on the petition filed on October 16, 2007, under 37 CFR 1.137(b)[1], to revive the above-identified application.

The petition is **GRANTED**.

The application became abandoned on May 24, 2007, for failure to file a proper reply to the final Office action mailed on February 23, 2007, which set a three (3) month shortened statutory period for reply. On March 28, 2007, petitioners filed an amendment after final rejection. The amendment did not place the case in condition for allowance, however, and an Advisory Action was mailed on April 16, 2007. Notice of Abandonment was mailed on September 6, 2007.

---

[1]Effective December 1, 1997, the provisions of 37 CFR 1.137(b) now provide that where the delay in reply was unintentional, a petition may be filed to revive an abandoned application or a lapsed patent pursuant to 37 CFR 1.137(b). A grantable petition filed under the provisions of 37 CFR 1.137(b) must be accompanied by:

(1) the required reply, unless previously filed. In a nonprovisional application abandoned for failure to prosecute, the required reply may be met by the filing of a continuing application. In an application or patent, abandoned or lapsed for failure to pay the issue fee or any portion thereof, the required reply must be the payment of the issue fee or any outstanding balance thereof.

(2) the petition fee as set forth in 37 CFR 1.17(m);

(3) a statement that the entire delay in filing the required reply from the due date for the reply until the filing of a grantable petition pursuant to 37 CFR 1.137(b) was unintentional. The Commissioner may required additional information where there is a question whether the delay was unintentional; and

(4) any terminal disclaimer (and fee as set forth in 37 CFR 1.20(d)) required pursuant to 37 CFR 1.137(c)).

Petitioners have filed a Request for Continued Examination (RCE) Request with the present petition.

Petitioners have not specified on the RCE Transmittal what paper is intended as the submission required under 37 CFR 1.114. Nevertheless, as the Request for Continued Examination (RCE) Transmittal states that "If a final Office action is outstanding, any amendments filed after the final Office action may be considered as a submission even if this box is not checked," the amendment after final rejection filed on March 28, 2007, will be construed as the submission required under 37 CFR 1.114. Petitioners must inform the Office if this is **not** a correct interpretation.

Receipt of the power of attorney and change of correspondence address filed on October 16, 2007, is acknowledged. It is noted that only the correspondence address has been changed by this paper. The correspondence address has been updated in accordance with the request.

This application is being referred to Technology Center Art Unit 1795 for further processing.

Telephone inquiries concerning this matter may be directed to the undersigned at (571)272-3231.

DWood

Douglas I. Wood
Senior Petitions Attorney
Office of Petitions

UNITED STATES PATENT AND TRADEMARK OFFICE

COMMISSIONER FOR PATENTS
UNITED STATES PATENT AND TRADEMARK OFFICE
P.O. BOX 1450
ALEXANDRIA, VA 22313-1450
www.uspto.gov
DIW Nov-07

ANTONY C. EDWARDS
SUITE 200 - 270 HIGHWAY 33 WEST
KELOWNA BC V1X 1X7
CANADA

COPY MAILED

NOV 19 2007

OFFICE OF PETITIONS

In re Application of	:	
David Deck Rendina	:	
Application Number: 10/409911	:	DECISION ON PETITION
Filing Date: 04/08/2003	:	
Attorney Docket Number: ACE-30920	:	

This is a decision on the petition filed on October 16, 2007, under 37 CFR 1.137(b)[1], to revive the above-identified application.

The petition is **GRANTED**.

The application became abandoned on May 24, 2007, for failure to file a proper reply to the final Office action mailed on February 23, 2007, which set a three (3) month shortened statutory period for reply. On March 28, 2007, petitioners filed an amendment after final rejection. The amendment did not place the case in condition for allowance, however, and an Advisory Action was mailed on April 24, 2007. Notice of Abandonment was mailed on September 6, 2007.

---

[1]Effective December 1, 1997, the provisions of 37 CFR 1.137(b) now provide that where the delay in reply was unintentional, a petition may be filed to revive an abandoned application or a lapsed patent pursuant to 37 CFR 1.137(b). A grantable petition filed under the provisions of 37 CFR 1.137(b) must be accompanied by:

(1) the required reply, unless previously filed. In a nonprovisional application abandoned for failure to prosecute, the required reply may be met by the filing of a continuing application. In an application or patent, abandoned or lapsed for failure to pay the issue fee or any portion thereof, the required reply must be the payment of the issue fee or any outstanding balance thereof.

(2) the petition fee as set forth in 37 CFR 1.17(m);

(3) a statement that the entire delay in filing the required reply from the due date for the reply until the filing of a grantable petition pursuant to 37 CFR 1.137(b) was unintentional. The Commissioner may required additional information where there is a question whether the delay was unintentional; and

(4) any terminal disclaimer (and fee as set forth in 37 CFR 1.20(d)) required pursuant to 37 CFR 1.137(c)).

Petitioners have filed a Request for Continued Examination (RCE) with the present petition.

Petitioners have not specified on the RCE Transmittal what paper is intended as the submission required under 37 CFR 1.114. Nevertheless, as the Request for Continued Examination (RCE) Transmittal states that "If a final Office action is outstanding, any amendments filed after the final Office action may be considered as a submission even if this box is not checked," the amendment after final rejection filed on March 28, 2007, will be construed as the submission required under 37 CFR 1.114. Petitioners must inform the Office if this is **not** a correct interpretation.

Receipt of the power of attorney and change of correspondence address filed on October 16, 2007, is acknowledged. It is noted that only the correspondence address has been changed by this paper. The correspondence address has been updated in accordance with the request.

This application is being referred to Technology Center Art Unit 1795 for further processing.

Telephone inquiries concerning this matter may be directed to the undersigned at (571)272-3231.

D Wood

Douglas I. Wood
Senior Petitions Attorney
Office of Petitions

UNITED STATES PATENT AND TRADEMARK OFFICE

Commissioner for Patents
United States Patent and Trademark Office
P.O. Box 1450
Alexandria, VA 22313-1450
www.uspto.gov

VOLPE AND KOENIG PC
UNITED PLAZA, SUITE 1600
30 SOUTH 17TH STREET
PHILADELPHIA, PA 19103

COPY MAILED

MAR 17 2005

OFFICE OF PETITIONS

In re Application of	:
Wei-Long Chen	:
Application No. 10/409,937	: DECISION GRANTING PETITION
Filed: April 9, 2003	: UNDER 37 CFR 1.313(c)(2)
Attorney Docket No. TET-PT007.2	:

This is a decision on the petition, filed March 16, 2005, under 37 CFR 1.313(c)(2) to withdraw the above-identified application from issue after payment of the issue fee.

The petition is **GRANTED**.

The above-identified application is withdrawn from issue for consideration of a submission under 37 CFR 1.114 (request for continued examination). See 37 CFR 1.313(c)(2).

Petitioner is advised that the issue fee paid on January 18, 2005 in the above-identified application cannot be refunded. If, however, the above-identified application is again allowed, petitioner may request that it be applied towards the issue fee required by the new Notice of Allowance.[1]

Telephone inquiries should be directed to the undersigned at (571) 272-3218.

This matter is being referred to Technology Center AU 2188 for processing of the request for continued examination under 37 CFR 1.114 and for consideration of the concurrently filed Information Disclosure Statement.

Frances Hicks
Petitions Examiner
Office of Petitions
Office of the Deputy Commissioner
for Patent Examination Policy

---

[1] *The request to apply the issue fee to the new Notice may be satisfied by completing and returning the new Issue Fee Transmittal Form PTOL-85(b), which includes the following language thereon: "Commissioner for Patents is requested to apply the Issue Fee and Publication Fee (if any) or re-apply any previously paid issue fee to the application identified above." Petitioner is advised that, whether a fee is indicated as being due or not, the Issue Fee Transmittal Form* **must** *be completed and timely submitted to avoid abandonment. Note the language in bold text on the first page of the Notice of Allowance and Fee(s) Due (PTOL-85).*

UNITED STATES PATENT AND TRADEMARK OFFICE

COMMISSIONER FOR PATENTS
UNITED STATES PATENT AND TRADEMARK OFFICE
P.O. BOX 1450
ALEXANDRIA, VA 22313-1450
www.uspto.gov

RICK VON WOHLD
MARTINE & PENILLA, LLP
710 LAKEWAY DRIVE, STE. 170
SUNNYVALE, CA 94085

Paper No. 4

COPY MAILED

SEP 04 2003

OFFICE OF PETITIONS

In re Application of:
Frank Reinecke
Application No. 10/409,954
Filed: April 8, 2003
Attorney Docket Number:
21029.29001

DECISION GRANTING PETITION

This Decision is in response to the Commissioner to Correct Filing Date of an Application, properly treated under 37 C.F.R. 1.10, filed August 4, 2003, requesting the application be accorded a filing date of April 8, 2003, instead of the presently accorded filing date of April 9, 2003.

The petition is **granted**.

Petitioner alleges the application was deposited in "Express Mail" service with the U.S. Postal Service, on April 8, 2003. In support, Petitioner provides a copy of the Express Mail label, receipt number EV239137464US, with a "Date-In" of April 8, 2003. The Application Transmittal page in the Official file also contains the Express Mail label number, EV239137464US, in the Certificate of Express Mailing.

The Office considers the date the correspondence is shown to have been deposited as "Express Mail" to be the "date-in" on the Express Mail mailing label. *See* MPEP §513. The date indicated on the "date-in" on the Express Mail mailing label verifies that the package was actually mailed. In view of the above, the evidence is convincing that the application was deposited as "Express Mail" with the US Postal Service on April 4, 2001.

In view of the foregoing, this Petition in **Granted**.

This application is being forwarded to the Office of Initial Patent Examination for correction of the filing date to April 8, 2003.

Telephone inquiries concerning this matter should be directed to Petitions Attorney Derek L. Woods at (703) 305-0014.

Derek L. Woods
Petitions Attorney
Office of Petitions

UNITED STATES PATENT AND TRADEMARK OFFICE

Commissioner for Patents
United States Patent and Trademark Office
P.O. Box 1450
Alexandria, VA 22313-1450
www.uspto.gov

CROMPTON, SEAGER & TUFTE, LLC
1221 NICOLLET AVENUE
SUITE 800
MINNEAPOLIS, MN 55403-2420

COPY MAILED

JUN 30 2006

OFFICE OF PETITIONS

In re Application of

Tobita, et al.

Application No. 10/409,957

Filed: April 9, 2003

Attorney Docket No. 1018.1166101

DECISION ON PETITION

This is a decision on the petition to withdraw the holding of abandonment under 37 CFR 1.181(a), filed April 11, 2006.

The petition is **granted**.

This application was held abandoned on March 8, 2006, after no reply was received to the Office action allegedly mailed February 18, 2005. A Notice of Abandonment was mailed on October 7, 2005. The instant petition was filed on April 11, 2006. Petitioner maintains that the notice of February 18, 2005, was never received and provides a copy of the relevant docketing calendar as proof of the same. It is also noted that the undersigned was not able to find the Office communication allegedly mailed February 18, 2005, in the application file.

Section 711.03(c)(II) of the *Manual of Patent Examining Procedure* ("MPEP") provides that in order to establish non-receipt of an Office action so as prove that the imposition of a holding of abandonment is improper, petitioner must: 1) provide a statement to the Office indicating that the Office action was not received by petitioner; 2) include in the statement an attestation to the fact that a review of the file jacket and docket records maintained by petitioner indicates that the Office action was not received; and 3) provide a copy of the docket record where the non-received Office communication would have been entered had it been received and docketed.

Petitioner has met the burden of proof as established by Section 711.03(c)(II) of the MPEP. The holding of abandonment is, therefore, withdrawn.

The application file is being forwarded to Technology Center 1700, GAU 1774 for further processing, including remailing of the Office action and resetting of the time period for reply to the same.

Questions concerning this decision should be directed to the undersigned at (571) 272-3222.

Kenya A. McLaughlin
Petitions Attorney
Office of Petitions

UNITED STATES PATENT AND TRADEMARK OFFICE

COMMISSIONER FOR PATENTS
UNITED STATES PATENT AND TRADEMARK OFFICE
P.O. BOX 1450
ALEXANDRIA, VA 22313-1450
WWW.USPTO.GOV

Paper No.

KRIEG DEVAULT LLP
ONE INDIANA SQUARE
SUITE 2800
INDIANAPOLIS IN 46204-2079

COPY MAILED
DEC 21 2007
OFFICE OF PETITIONS

In re Application of
William D. O'Brien Jr., et al.
Application No. 10/409,970
Filed: April 9, 2003
Attorney Docket No.: 22010-177
Title: INTRABODY COMMUNICATION WITH ULTRASOUND

DECISION ON PETITION
UNDER 37 C.F.R. § 1.181

This is a decision on the petition filed on October 11, 2007, pursuant to 37 C.F.R. § 1.181, requesting that the holding of abandonment in the above-identified application be withdrawn.

BACKGROUND

The above-identified application became abandoned for failure to reply within the meaning of 37 C.F.R § 1.113 in a timely manner to the final Office action mailed January 11, 2007, which set a shortened statutory period for reply of three months. An after-final response was received on April 13, 2007, which contained a certificate of mailing dated April 11, 2007. No extensions of time under the provisions of 37 C.F.R § 1.136(a) were obtained, and no further responses were received. Accordingly, the above-identified application became abandoned on April 12, 2007. A notice of abandonment was mailed on September 21, 2007.

RELEVANT PORTION OF THE M.P.E.P..

37 C.F.R. § 1.134 sets forth, *in toto*:

An Office action will notify the applicant of any non-statutory or shortened statutory time period set for reply to an Office action. Unless the applicant is notified in writing that a reply is required in less than six months, a maximum period of six months is allowed.

37 C.F.R. § 1.135 sets forth, *in toto*:

(a) If an applicant of a patent application fails to reply within the time period provided under § 1.134 and § 1.136, the application will become abandoned unless an Office action indicates otherwise.
(b) Prosecution of an application to save it from abandonment pursuant to paragraph (a) of this section must include such complete and proper reply as the condition of the application may require. The admission of, or refusal to admit, any amendment after final rejection or any amendment not responsive to the last action, or any related proceedings, will not operate to save the application from abandonment.
(c) When reply by the applicant is a bona fide attempt to advance the application to final action, and is substantially a complete reply to the non-final Office action, but consideration of some matter or compliance with some requirement has been inadvertently omitted, applicant may be given a new time period for reply under § 1.134 to supply the omission.

ANALYSIS

With the present petition, Petitioner has asserted that a Notice of Appeal was submitted to the Office on June 14, 2007. A review of the electronic record has confirmed this to be the case, and it is noted that a two-month extension of time was filed along with the notice of appeal. As such, the period for responding to the final rejection was extended until June 11, 2007, and it is noted that the notice of appeal contains a certificate of mailing dated June 11, 2007. As such, the notice of appeal was timely filed.

Moreover, on October 11, 2007, concurrently with this petition, Petitioner submitted a two-month extension of time, an appeal brief, and the associated fee was received in the Office. As such, the period for submitting an appeal brief was extended until October 14, 2007. As such, the appeal brief was timely filed.

CONCLUSION

Considering the facts and circumstances of the delay at issue, as set forth on petition, it is concluded that Petitioner has met his burden of establishing that a response was timely submitted.

Accordingly, the petition under 37 C.F.R. §1.181(a) is **GRANTED**. The holding of abandonment is **WITHDRAWN**.

The Technology Center will be notified of this decision. The Technology Center's support staff will notify the Examiner of this decision, so that the appeal brief, which was concurrently submitted with this petition, can be processed.

Telephone inquiries regarding *this decision* should be directed to the undersigned at (571) 272-3225[1]. All other inquiries concerning examination procedures or status of the application should be directed to the Technology Center.

Paul Shanoski
Senior Attorney
Office of Petitions

---

1 Petitioner will note that all practice before the Office should be in writing, and the action of the Office will be based exclusively on the written record in the Office. See 37 C.F.R. § 1.2. As such, Petitioner is reminded that no telephone discussion may be controlling or considered authority for Petitioner's further action(s).

UNITED STATES PATENT AND TRADEMARK OFFICE

Commissioner for Patents
United States Patent and Trademark Office
P.O. Box 1450
Alexandria, VA 22313-1450
www.uspto.gov

MAILED

OCT 01 2004

Technology Center 2100

Paper No. 8

HOGAN & HARTSON L.L.P.
500 S. GRAND AVENUE
SUITE 1900
LOS ANGELES, CA 90071-2611

In re Application of: IDEI, et al.
Application No. 10/409,989
Filed: April 7, 2003
For: PREFETCH APPLIANCE SERVER

DECISION ON PETITION
TO MAKE SPECIAL
(ACCELERATED
EXAMINATION)
UNDER M.P.E.P. §708.02 (VIII)

This is a response to the petition filed August 27, 2004, under 37 C.F.R. §102(d) and M.P.E.P. §708.02(VIII): Accelerated Examination, to make the above-identified application special.

The Petition is **GRANTED**.

M.P.E.P. §708.02, Section VIII which sets out the prerequisites for a grantable petition for Accelerated Examination under 37 C.F.R. §102(d) states in relevant part:

A new application (one which has not received any examination by the examiner) may be granted special status provided that applicant (and this term includes applicant's attorney or agent) complies with each of the following items:

(a) Submits a petition to make special accompanied by the fee set forth in 37 CFR 1.17(h);

(b) Presents all claims directed to a single invention, or if the Office determines that all the claims presented are not obviously directed to a single invention, will make an election without traverse as a prerequisite to the grant of special status;

(c) Submits a statement(s) that a pre-examination search was made, listing the field of search by class and subclass, publication, Chemical Abstracts, foreign patents, etc. The pre-examination search must be directed to the invention as claimed in the application for which special status is requested. A search made by a foreign patent office satisfies this requirement;

(d) Submits one copy each of the references deemed most closely related to the subject matter encompassed by the claims if said references are not already of record; and

(e) Submits a detailed discussion of the references, which discussion points out, with the particularity required by 37 CFR 1.111 (b) and (c), how the claimed subject matter is patentable over the references.

With respect to item (b) above, the statement in the instant petition that "applicant will elect without traverse claims 7-9, 13 and 19-21 for prosecution" is taken as an admission that Applicant is willing to elect a single invention *without traverse* should an election be required by the Office, regardless of the particulars of the requirement determined by the Examiner in the instant application. Therefore, applicant's submission filed August 27, 2004 meet all of the criteria set forth above.

SUMMARY: Petition to Make Special **GRANTED**.

The application file is being forwarded to the Examiner for accelerated examination in accordance with M.P.E.P. §708.02, Section VIII. If the application is subsequently allowed, it will be given priority for printing. See M.P.E.P. §1309.

Brian L. Johnson
Special Program Examiner
Technology Center 2100
Computer Architecture, Software and Information Security
703-308-0885

BLJ: 9/28/04

UNITED STATES PATENT AND TRADEMARK OFFICE

COMMISSIONER FOR PATENTS
UNITED STATES PATENT AND TRADEMARK OFFICE
P.O. BOX 1450
ALEXANDRIA, VA 22313-1450
www.uspto.gov

Paper No. 3

Renessen LLC
Intellectual Property, Legal Dept.
3000 Lakeside Drive, Suite 300 South
Bannockburn IL 60015

COPY MAILED

NOV 28 2003

OFFICE OF PETITIONS

In re Application of :
OULMASSOV et al. :
Application No. 10/409,993 : DECISION REFUSING STATUS
Filed: April 9, 2003 : UNDER 37 CFR 1.47(a)
Attorney Docket No. REN-00-190-SIR :

This is in response to the petition under 37 CFR 1.47(a), filed August 14, 2003 (certificate of mailing August 11, 2003).

The petition is **dismissed**.

Applicants are given TWO (2) MONTHS from the mailing date of this decision to reply, correcting the below-noted deficiencies. Any reply should be entitled "Request for Reconsideration of Petition Under 37 CFR 1.47(a)," and should address the deficiencies noted below, except that the reply may include an oath or declaration executed by the non-signing inventor. Failure to respond will result in abandonment of the application. Any extensions of time will be governed by 37 CFR 1.136(a).

The above-identified application was filed on April 9, 2003, without an executed oath or declaration. Accordingly, on June 11, 2003, the Office mailed a "Notice to File Missing Parts of Application," requiring an executed oath or declaration and a surcharge for its late filing.

In response, on August 14, 2003 (certificate of mailing August 11, 2003), applicants filed the present petition and a declaration signed by six of the nine joint inventors. In the Declaration of Facts, Thomas Omholt states: "The necessary papers were sent to Drs. William J. Welsh, Xia Wang and Robert K. DeLisle on July 23, 2003 via Federal Express to the address of the remaining known co-inventor. . . ." *Declaration of August 14, 2003, p. 2.* Mr. Omholt further states that on August 4, 2003, the "necessary papers" were sent to Dr. Welsh via Federal Express at his present place of employment. On August 11, 2003, Ms. Palvo verified with Federal Express that the papers were received and signed for on August 5, 2003, but were not returned to applicant.

A grantable petition under 37 CFR 1.47(a) requires: (1) proof that the non-signing inventor cannot be reached or refuses to sign the oath or declaration after having been presented with the application papers (specification, claims and drawings); (2) an acceptable oath or declaration in compliance with 35 U.S.C. §§ 115 and 116; (3) the petition fee; and (4) a statement of the last known address of the non-signing inventor. Applicants lack items (1) and (2) as set forth above.

As to item (1), Mr. Omholt states that the "necessary papers" were mailed to the nonsigning inventors. In it unclear from the record whether Drs. William J. Welsh, Xia Wang and Robert K. DeLisle were presented with the complete application papers. Unless Drs. William J. Welsh, Xia Wang and Robert K. DeLisle were presented with a complete copy of the application papers, including the specification, claims and drawings, they could not attest that they have "reviewed and understand[] the application papers," and therefore, could not sign the declaration that they were given. Accordingly, applicants failed to show or provide proof that the three inventors have refused to sign the declaration. See MPEP 409.03(d). Applicants must show that complete copies of the application papers, including the specification, claims and drawings, were presented to Drs. William J. Welsh, Xia Wang and Robert K. DeLisle, but that they did not respond to the request that they sign the declaration to show that the inventors have refused to join in the application.

As to item (2), applicants failed to submit an oath or declaration for the patent application in compliance with 37 CFR 1.63 and 1.64. The declaration does not identify the residences or mailing addresses of Drs. William J. Welsh, Xia Wang and Robert K. DeLisle. The Office notes that the oath or declaration must identify "[t]he mailing address, and the residence if an inventor lives at a location which is different from where the inventor customarily receives mail, of each inventor. . . ." 37 CFR 1.63(c)(1). Accordingly, to correct the deficiencies, applicants must submit an oath or declaration in compliance with 37 CFR 1.63 and 1.67, which identifies the entire inventive entity and the correct mailing address of each inventor and is signed by the signing inventors on behalf of the nonsigning inventors, Drs. William J. Welsh, Xia Wang and Robert K. DeLisle.

Further correspondence with respect to this matter should be addressed as follows and **to the attention of Christina Tartera Donnell, Senior Petitions Attorney:**

By mail: Commissioner for Patents
Mail Stop Petitions
PO Box 1450
Alexandria, VA 22313-1450

By FAX: (703) 872-9306
Attn: Office of Petitions

By hand: 2011 South Clark Place
Customer Window
Crystal Plaza Two, Lobby, Room 1B03
Arlington, VA

Telephone inquiries concerning this matter may be directed to the undersigned at (703) 306-5589.

Christina Tartera Donnell

Christina Tartera Donnell
Senior Petitions Attorney
Office of Petitions

UNITED STATES PATENT AND TRADEMARK OFFICE

Commissioner for Patents
United States Patent and Trademark Office
P.O. Box 1450
Alexandria, VA 22313-1450
www.uspto.gov

Paper No. 5

Renessen LLC
Intellectual Property, Legal Dept.
3000 Lakeside Drive, Suite 300 South
Bannockburn, IL 60015

COPY MAILED

JUN 0 3 2004

OFFICE OF PETITIONS

In re Application of :
Oulmassov et al. :
Application No. 10/409,993 :
Filed: April 9, 2003 :
Attorney Docket No. REN-00-190-SIR :

ON PETITION

This is in response to the renewed petition under 37 CFR 1.47(a), filed September 25, 2003, and again on May 17, 2004.

In view of the joinder of the inventors, further consideration under 37 CFR 1.47(a) is not necessary. Accordingly, the petition is dismissed as involving a moot issue. This application does not have any Rule 1.47(a) status and no such status should appear on the file wrapper. This application need not be returned to this Office for further consideration under 37 CFR 1.47(a).

This file is being forwarded to Technology Center 1600.

Telephone inquiries should be directed to the undersigned at (703) 306-5589.

Christina Tartera Donnell

Christina Tartera Donnell
Senior Petitions Attorney
Office of Petitions

UNITED STATES PATENT AND TRADEMARK OFFICE

UNITED STATES DEPARTMENT OF COMMERCE
United States Patent and Trademark Office
Address: COMMISSIONER FOR PATENTS
P.O. Box 1450
Alexandria, Virginia 22313-1450
www.uspto.gov

BANNER & WITCOFF , LTD
ATTORNEYS FOR CLIENT NUMBER 007412
1100 13th STREET, N.W.
SUITE 1200
WASHINGTON, DC 20005-4051

Mail Date: 04/29/2010

Applicant	: Edward A. Miner	: DECISION ON REQUEST FOR
Patent Number	: 7668963	: RECALCULATION of PATENT
Issue Date	: 02/23/2010	: TERM ADJUSTMENT IN VIEW
Application No	: 10/410,023	: OF WYETH AND NOTICE OF INTENT TO
Filed	: 04/08/2003	: ISSUE CERTIFICATE OF CORRECTION
		:

The Request for Recalculation is **GRANTED** to the extent indicated.

The patent term adjustment has been determined to be **958** days. The USPTO will *sua sponte* issue a certificate of correction reflecting the amount of PTA days determined by the recalculation.

Prior to the issuance of the certificate of correction, the USPTO will afford patentee an opportunity to be heard and request reconsideration. Accordingly, patentee has **one month or thirty (30) days**, whichever is longer, to file a request for reconsideration of this patent term adjustment calculation. See 35 U.S.C. 154(b)(3)(B)(ii) and 37 CFR 1.322(a)(4). No extensions of time will be granted under 37 CFR 1.136.

Patentee should use document code PET.OP if electronically filing a request for reconsideration of this patent term adjustment calculation. The patentee must also include the information required by 37 CFR 1.705(b)(2) and the fee required by 37 CFR 1.18(e). If patentee does not file a timely request for reconsideration of this patent term adjustment calculation including the information required by 37 CFR 1.705(b)(2) and the fee required by 37 CFR 1.18(e), the USPTO will issue a certificate of correction reflecting the PTA determination noted above.

Patentee should be aware that in order to preserve the right to review in the United States District Court for the District of Columbia of the USPTO patent term adjustment determination, patentee must ensure that he or she also take the steps required under 35 U.S.C. 154(b)(4)(A) in a timely manner. Nothing in the request for recalculation should be construed as providing an alternative time frame for commencing a civil action under 35 U.S.C. 154(b)(4)(A).

Any questions concerning this decision should be directed to the Office of Patent Legal Administration at 571-272-7702.

UNITED STATES PATENT AND TRADEMARK OFFICE

COMMISSIONER FOR PATENTS
UNITED STATES PATENT AND TRADEMARK OFFICE
P.O. BOX 1450
ALEXANDRIA, VA 22313-1450
www.uspto.gov

SHARP LABORATORIES OF AMERICA, INC
5750 NW PACIFIC RIM BLVD
CAMAS, WA 98642

COPY MAILED
JUL 1 1 2006
OFFICE OF PETITIONS

In re Application of
Wei Pan, et al.
Application No. 10/410,029
Filed: April 9, 2003
Attorney Docket No. SLA 0602

ON PETITION

This is a decision on the petition under 37 CFR 1.137(b) to revive the above-identified application, filed February 21, 2006. This is also a decision on the communication filed December 13, 2005, which is being treated as request to withdraw the holding of abandonment under the provisions of 37 CFR 1.181.

The petition to withdraw the holding of abandonment under 37 CFR 1.181 is **DISMISSED**.

The petition to revive under 37 CFR 1.137(b) is **GRANTED**.

A review of the record discloses that the application became abandoned for failure to pay the issue/publication fee on or before October 20, 2005. A Notice of Abandonment was mailed on December 8, 2005. In response, on December 13, 2005, petitioner filed a Request Under 37CFR 1.8(b) to Consider Correspondence with Certificate of Transmission Timely Filed. Petitioner submits the requisite issue/publication fee and request, in effect, that the abandonment be withdrawn.

The record shows that the abandonment was proper, since the U.S. Patent and Trademark Office did not receive a facsimile transmission of the issue fee transmittal on July 29, 2005 as intended or on any date prior to October 20, 2005. In fact, petitioner acknowledges that the fax in question did not "go through". The issue/publication fee was not paid until December 13, 2005, which is clearly after the due date of October 20, 2005. Thus, the present petition to revive is necessary.

The petition satisfies the requirements of 37 CFR 1.137(b) in that petitioner has supplied (1) the reply in the form of the requisite issue/publication fee; (2) the petition fee of $1,500; and (3) the required statement of unintentional delay. Since the $1700 issue/publication fee submitted with the present petition was previously paid on December 13, 2005, the fee is being refunded to counsel's deposit account.

The application is being referred to the Office of Publications to be processed into a patent.

Telephone inquires related to this decision should be directed to the undersigned at (571) 272-3204. Telephone inquiries related to processing at Publishing Division should be directed to (571) 272-4200.

Sherry D. Brinkley
Petitions Examiner
Office of Petitions

OIPE JC88
FEB 17 2005
PATENT & TRADEMARK OFFICE

PTO/SB/83 (09-03)
Approved for use through 11/30/2005. OMB 0651-0035
U.S. Patent and Trademark Office, U.S. DEPARTMENT OF COMMERCE
Under the Paperwork Reduction Act of 1995, no persons are required to respond to a collection of information unless it displays a valid OMB control number.

REQUEST FOR WITHDRAWAL AS ATTORNEY OR AGENT AND CHANGE OF CORRESPONDENCE ADDRESS

Application Number	10/410,030
Filing Date	4/9/03
First Named Inventor	Vidal
Art Unit	1773
Examiner Name	Not known
Attorney Docket Number	VIDAL-0001

To: Commissioner for Patents
P.O. Box 1450
Alexandria, VA 22313-1450

AUG 30 2004
Approved
Jacqueline M. Stone, Director
Technology Center 1700

Please withdraw me as attorney or agent for the above identified patent application, and

- [✓] all the attorneys/agents of record.
- [ ] the attorneys/agents (with registration numbers) listed on the attached paper(s), or
- [ ] the attorneys/agents associated with Customer Number [ ]

NOTE: This box can only be checked when the power of attorney of record in the application is to all the practitioners associated with a customer number.

The reasons for this request are: 37 CFR 10.40(b)(4)

CORRESPONDENCE ADDRESS

1. [ ] The correspondence address is NOT affected by this withdrawal.
2. [✓] Change the correspondence address and direct all future correspondence to:

[ ] Customer Number: [ ]

OR

[✓] Firm *or* Individual Name	Mr. Joseph Vidal				
Address	3151 Washington St.				
Address	2nd Flr.				
City	Jamaica Plains	State	MA	Zip	02130
Country	USA				
Telephone				Fax	

Name	Inna Shtivelband Landsman		
Signature	Inna Lan	Registration No.	44337
Date	~~2/11/2004~~ 2/12/04	Telephone No.	781.274.6691

NOTE: Withdrawal is effective when approved rather than when received. Unless there are at least 30 days between approval of withdrawal and the expiration date of a time period for response or possible extension period, the request to withdraw is normally disapproved.

This collection of information is required by 37 CFR 1.36. The information is required to obtain or retain a benefit by the public which is to file (and by the USPTO to process) an application. Confidentiality is governed by 35 U.S.C. 122 and 37 CFR 1.14. This collection is estimated to take 12 minutes to complete, including gathering, preparing, and submitting the completed application form to the USPTO. Time will vary depending upon the individual case. Any comments on the amount of time you require to complete this form and/or suggestions for reducing this burden, should be sent to the Chief Information Officer, U.S. Patent and Trademark Office, U.S. Department of Commerce, P.O. Box 1450, Alexandria, VA 22313-1450. DO NOT SEND FEES OR COMPLETED FORMS TO THIS ADDRESS. **SEND TO: Commissioner for Patents, P.O. Box 1450, Alexandria, VA 22313-1450.**

If you need assistance in completing the form, call 1-800-PTO-9199 and select option 2.

UNITED STATES PATENT AND TRADEMARK OFFICE

Commissioner for Patents
United States Patent and Trademark Office
P.O. Box 1450
Alexandria, VA 22313-1450
www.uspto.go

GREENBERG TRAURIG, LLP
77 WEST WACKER DRIVE
SUITE 2500
CHICAGO IL 60601-1732

COPY MAILED

FEB 1 1 2005

OFFICE OF PETITIONS

In re Application of	:	
Hayes, Patrick H.	:	
Application No. 10/410,033	:	DECISION GRANTING PETITION
Filed: April 9, 2003	:	UNDER 37 CFR 1.137(b)
Attorney Docket No. 81230.91US1	:	

This is a decision on the petition, filed January 31, 2005, which is being treated as a petition under 37 CFR 1.137(b) to revive the instant non-provisional application for failure to timely notify the U.S. Patent and Trademark (USPTO) of the filing of an application in a foreign country, or under a multinational treaty that requires publication of applications eighteen months after filing. *See* 37 CFR 1.137(f).

The petition is **GRANTED**.

Petitioner states that the instant nonprovisional application is the subject of an application filed in an eighteen-month publication country on April 6, 2004. However, the USPTO was unintentionally not notified of this filing within 45 days subsequent to the filing of the subject application in an eighteen-month publication country.

In view of the above, this application became abandoned pursuant to 35 U.S.C. § 122(b)(2)(B)(iii) and 37 CFR 1.213(c) for failure to timely notify the Office of the filing of an application in a foreign country or under a multilateral international agreement that requires publication of applications 18 months after filing.

A petition to revive an application abandoned pursuant to 35 U.S.C. 122(b)(2)(B)(iii) for failure to notify the USPTO of a foreign filing must be accompanied by:

(1) the required reply which is met by the notification of such filing in a foreign country or under a multinational treaty;
(2) the petition fee as set forth in 37 CFR 1.17(m); and
(3) a statement that the entire delay in filing the required reply from the due date of the reply until the filing of a grantable petition was unintentional.

The instant petition has been found to be in compliance with 37 CFR 1.137(b). Accordingly, the failure to timely notify the USPTO of a foreign or international filing within 45 days after the date of filing of such foreign or international application as provided by 35 U.S.C. § 122(b)(2)(B)(iii) and 37 CFR 1.213(c) is accepted as having been unintentionally delayed.

The previous Request and Certification under 35 U.S.C. § 122(b)(2)(B)(i) has been rescinded. A Notice Regarding Rescission of Nonpublication Request which sets forth the projected publication date of May 19, 2005 accompanies this decision on petition.

This matter is being referred to the Publishing Division for processing into a patent.

Telephone inquiries concerning this decision should be directed to the undersigned at (571) 272-3206.

Liana Chase
Petitions Examiner
Office of Petitions
Office of the Deputy Commissioner
for Patent Examination Policy

ATTACHMENT: Notice Regarding Rescission of Nonpublication Request

UNITED STATES PATENT AND TRADEMARK OFFICE

COMMISSIONER FOR PATENTS
UNITED STATES PATENT AND TRADEMARK OFFICE
P.O. BOX 1450
ALEXANDRIA, VA 22313-1450
WWW.USPTO.GOV

Paper No. 6

Richard W. Goldstein
2071 Clove Road
Staten Island, NY 10304

COPY MAILED

JUL 0 8 2003

OFFICE OF PETITIONS

In re Application of :
Robert Marraudino :
Application No. 10/410,048 : DECISION ON PETITION
Filed: April 9, 2003 :
Attorney Docket No. 13203 :

This is a decision on the "Petition," filed June 26, 2003. This petition is considered in light of the corrected petition[1] filed July 7, 2003. Petitioner requests, in essence, that the Office accord the above-identified nonprovisional application a filing date of April 9, 2003, with figure 5 considered a part of the original application disclosure.

Application papers in the above-identified application were filed on April 9, 2003. However, on June 4, 2003, the Office mailed a "Notice of Omitted Item(s) in a Nonprovisional Application," advising applicant that the application papers had been accorded a filing date; however, figure 5 described in the specification appeared to be omitted from the application.

In response, applicant timely filed the instant petition (and petition fee). Applicant asserts that there were 5 drawing sheets (including figure 5) filed with the 16 page specification on April 9, 2003. In support thereof, applicant submits a copy of their return postcard from the USPTO. Applicant also submits a copy of figure 5.

A postcard receipt which itemizes and properly identifies the items which are being filed serves as *prima facie* evidence of receipt in the Office of all items listed thereon on the date stamped thereon by the Office. See MPEP 503. A review of petitioner's postcard receipt reveals that: 1) it was date stamped as received in the USPTO on April 9, 2003, and the items filed therewith were assigned Application No. 10/410,048; 2) it specifically identifies the items being filed, including "_5 drawing sheets" and 3) it lacks any annotation of nonreceipt of any item denoted on the postcard. Thus, petitioner has shown that the items denoted, including the 5 sheets of drawings, were filed on April 9, 2003.

---

[1] A corrected petition was required as a later filed drawing sheet could entitle an application to the later date of submission as the filing date or the date of original filing with a proper showing. Accordingly, clarification of the request in the original petition to accord the application the date of filing of the petition (and the resupplied drawing) was required.

The sheets of drawings already considered received in the Office on April 9, 2003, were reviewed along with the drawing sheet containing figure 5 supplied on petition. These papers together constitute the item described on the postcard receipt as "5 drawing sheets." It is concluded that petitioner has shown that figure 5 was among the items present in the application on the date of deposit and should be included in the original application disclosure.

Accordingly, the petition is **GRANTED**.

Given the basis for granting the petition, the petition fee is subject to refund. This refund is being processed separately by the Office of Finance.

The application is being returned to the Office of Initial Patent Examination (OIPE) for:

- processing **with a filing date of April 9, 2003** using the application papers received in the Office and presently accorded that date, and figure 5 resupplied on petition filed June 26, 2003; and
- indication in Office records that 5 sheets of drawings were present in the application on filing (including figure 5).

Applicant will receive appropriate notifications regarding the fees owed, if any, and other information in due course from OIPE.

Telephone inquiries related to this decision should be directed to the undersigned at 703-305-0309.

Nancy Johnson
Petitions Attorney
Office of Petitions

UNITED STATES PATENT AND TRADEMARK OFFICE

COMMISSIONER FOR PATENTS
UNITED STATES PATENT AND TRADEMARK OFFICE
P.O. BOX 1450
ALEXANDRIA, VA 22313-1450
www.uspto.gov

Michael W. Goltry
Parsons and Goltry
Suite 260
340 East Palm Lane
Phoenix, AZ 85004

COPY MAILED
AUG 0 6 2004
OFFICE OF PETITIONS

In re Application of :
Lance S. Davidson :
Application No. 10/410,082 : DECISION GRANTING PETITION
Filed: April 9, 2003 : UNDER 37 CFR 1.137(b)
Attorney Docket No. 4368-PA1 :

This is a decision on the petition, filed July 19, 2004, which is being treated as a petition under 37 CFR 1.137(b) to revive the instant nonprovisional application for failure to timely notify the U.S. Patent and Trademark (USPTO) of the filing of an application in a foreign country, or under a multinational treaty that requires publication of applications eighteen months after filing. *See* 37 CFR 1.137(f).

The petition is **GRANTED**.

Petitioner states that the instant nonprovisional application is the subject of an application filed in an eighteen-month publication country on April 8, 2004. However, the USPTO was unintentionally not notified of this filing within 45 days subsequent to the filing of the subject application in an eighteen-month publication country.

In view of the above, this application became abandoned pursuant to 35 U.S.C. § 122(b)(2)(B)(iii) and 37 CFR 1.213(c) for failure to timely notify the Office of the filing of an application in a foreign country or under a multilateral international agreement that requires publication of applications 18 months after filing.

A petition to revive an application abandoned pursuant to 35 U.S.C. 122(b)(2)(B)(iii) for failure to notify the USPTO of a foreign filing must be accompanied by:

(1) the required reply which is met by the notification of such filing in a foreign country or under a multinational treaty;
(2) the petition fee as set forth in 37 CFR 1.17(m); and
(3) a statement that the entire delay in filing the required reply from the due date of the reply until the filing of a grantable petition was unintentional.

The instant petition has been found to be in compliance with 37 CFR 1.137(b). Accordingly, the failure to timely notify the USPTO of a foreign or international filing within 45 days after the date of filing of

such foreign or international application as provided by 35 U.S.C. § 122(b)(2)(B)(iii) and 37 CFR 1.213(c) is accepted as having been unintentionally delayed.

Telephone inquiries concerning this decision should be directed to the undersigned at (703) 306-3475.

This application is being referred to Technology Center Art Unit 3713 for examination in due course.

Marianne E. Jenkins

Marianne E. Jenkins
Petitions Examiner
Office of Petitions
Office of the Deputy Commissioner
for Patent Examination Policy

UNITED STATES PATENT AND TRADEMARK OFFICE

Commissioner for Patents
United States Patent and Trademark Office
P.O. Box 1450
Alexandria, VA 22313-1450
www.uspto.gov

WORKMAN NYDEGGER/MICROSOFT
1000 EAGLE GATE TOWER
60 EAST SOUTH TEMPLE
SALT LAKE CITY UT 84111

COPY MAILED

JUL 18 2008

In re Application of
Nikhil Kothari et al.
Application No. 10/410,096
Filed: April 8, 2003
Attorney Docket No. 13768.359

: DECISION ACCORDING STATUS
: UNDER 37 CFR 1.47(a)

This is in response to the petition under 37 CFR 1.47(a), filed June 2, 2008.

The petition is GRANTED.

The above-identified application and papers have been reviewed and found in compliance with 37 CFR 1.47(a). This application is hereby accorded Rule 1.47(a) status.[1]

The above-cited application was filed on April 8, 2003, without a proper oath or declaration. A Notice to File Missing Parts of Nonprovisional Application was mailed on June 16, 2003, requiring a properly executed oath or declaration and surcharge. The notice allowed an extendable period for reply of two months from its mailing date. A response was filed July 1, 2003 but without a petition and petition fee.

Petitioner has shown that joint inventor Warren has constructively refused to join the prosecution of the application. The above-identified application and papers have been reviewed and found in compliance with 37 CFR 1.47(a). This application is hereby accorded Rule 1.47(a) status.

The fee for the instant petition is $200.00. Deposit account 23-3178 will be charged for the petition fee, accordingly.

Thus, as provided in Rule 1.47c, this Office will forward notice of this application's filing to the non-signing inventor at the address given in the petition. Notice of the filing of this application will also be published in the Official Gazette.

This matter is being referred to Technology Center 2193 for examination in due course.

Telephone inquiries concerning this matter may be directed to the undersigned Petitions Attorney at (571) 272-3212.

Patricia Faison-Ball

Patricia Faison-Ball
Senior Petitions Attorney
Office of Petitions

---

[1] A grantable petition under 37 CFR 1.47(a) requires: (1) proof that the non-signing inventor cannot be reached or refuses to sign the oath or declaration after having been presented with the application papers (specification, claims and drawings); (2) an acceptable oath or declaration in compliance with 35 U.S.C. §§ 115 and 116; (3) the petition fee; and (4) a statement of the last known address of the non-signing inventor.

VIA eFILE

PATENT APPLICATION
Docket No. 13768.359

IN THE UNITED STATES PATENT AND TRADEMARK OFFICE

In re application of		)
	Nikhil Kothari, et al.	)
		) Art Unit
Serial No.	10/410,096	) 2193
Filed:	April 8, 2003	)
Confirmation No.:	7511	)
For:	LOGICAL SEPARATION OF CODE AND CONTENT	)
Examiner:	Mark P. Francis	)
Customer No.:	47973	)

PETITION UNDER RULE § 47(a)
TO PROSECUTE IN ABSENCE OF INVENTOR AND
SUPPLEMENT TO DECLARATION AND RESPONSE TO MISSING PARTS
FILED JULY 1, 2003

VIA eFILE
Commissioner for Patents
P.O. Box 1450
Alexandria, VA 22313-1450

Dear Sir:

Please accept this petition, along with all of the documents that were previously filed in the Response to Missing Parts on July 1, 2003, and which are enclosed herewith, to prosecute the application in absence of the inventor signature on the Declaration, and as previously articulated in the Response to Missing Parts.

X The Commissioner is hereby authorized to charge payment of the following fees associated with this communication or credit any overpayment to Deposit Account No. 23-3178.

X Any filing fees under 37 CFR 1.16 for the presentation of extra claims.

X Any patent application processing fees under 37 CFR 1.17.

Dated this 28th day of May, 2008.

Respectfully submitted,

RICK D. NYDEGGER
Registration No. 28,651
JENS C. JENKINS
Registration No. 44,803
Attorneys for Applicant
Customer No. 47973

RDN:JCJ:ahy
1751637_1

UNITED STATES PATENT AND TRADEMARK OFFICE

COMMISSIONER FOR PATENTS
UNITED STATES PATENT AND TRADEMARK OFFICE
P.O. BOX 1450
ALEXANDRIA, VA 22313-1450
WWW.USPTO.GOV

Paper No. 5

WORKMAN NYDEGGER
F/K/A WORKMAN NYDEGGER & SEELEY
60 EAST SOUTH TEMPLE
1000 EAGLE GATE TOWER
SALT LAKE CITY, UT 84111

COPY MAILED

AUG 2 0 2003

OFFICE OF PETITIONS

In re Application of	:	
Nikhil Kothari et al	:	
Application No. 10/410,097	:	DECISION GRANTING STATUS
Filed: April 8, 2003	:	UNDER 37 CFR 1.47(A)
For: CODE BUILDERS	:	

This is in response to the petition under 37 CFR 1.47(a), filed JUNE 23, 2003.

The petition is granted.

Petitioner has shown that the non-signing inventor has refused to join in the filing of the above-identified application.

The above-identified application and papers have been reviewed and found in compliance with 37 CFR 1.47(a). This application is hereby accorded Rule 1.47(a) status. As provided in Rule 1.47(c), this Office will forward notice of this application's filing to the non-signing inventor at the address given in the petition. Notice of the filing of this application will also be published in the Official Gazette.

After this decision is mailed, deposit account No. 23-3178 will be charged the fee for the petition under 37 CFR 1.47 ($130).

Telephone inquiries regarding this decision should be directed to Petitions Examiner Wan Laymon at (703) 306-5685.

This application is being forwarded to the Office of Initial Patent Examination for preexamination processing.

Frances Hicks
Lead Petitions Examiner
Office of Petitions
Office of the Deputy Commissioner
for Patent Examination Policy

UNITED STATES PATENT AND TRADEMARK OFFICE

COMMISSIONER FOR PATENTS
UNITED STATES PATENT AND TRADEMARK OFFICE
P.O. BOX 1450
ALEXANDRIA, VA 22313-1450
WWW.USPTO.GOV

SUSAN M. WARREN
10809 W. SNOQ VALLEY NE
CARNATION, WA 98014

COPY MAILED
AUG 2 0 2003
OFFICE OF PETITIONS

In re Application of
Kothari; Lin; Guthrie; and Warren
Application No. 10/410,097
Filed: April 8, 2001
For: CODE BUILDERS

Dear Ms. Warren:

You are named as a joint inventor in the above identified United States patent application, filed under the provisions of 35 U.S.C. 116 (United States Code), and 37 CFR 1.47(a), Rules of Practice in Patent Cases. Should a patent be granted on the application you will be designated therein as a joint inventor.

As a named inventor you are entitled to inspect any paper in the file wrapper of the application, order copies of all or any part thereof (at a prepaid cost per 37 CFR 1.19) or make your position of record in the application. Alternatively, you may arrange to do any of the preceding through a registered patent attorney or agent presenting written authorization from you. If you care to join in the application, counsel of record (see below) would presumably assist you. Joining in the application would entail the filing of an appropriate oath or declaration by you pursuant to 37 CFR 1.63.

Telephone inquiries regarding this communication should be directed to Wan Laymon at (703) 306-5685. Requests for information regarding your application should be directed to the File Information Unit at (703) 308-2733. Information regarding how to pay for and order a copy of the application, or a specific paper in the application, should be directed to Certification Division at (703) 308-9726 or 1 (800) 972-6382 (outside the Washington D.C. area).

Frances Hicks
Frances Hicks
Lead Petitions Examiner
Office of Petitions
Office of the Deputy Commissioner
for Patent Examination Policy

cc:
WORKMAN NYDEGGER
F/K/A WORKMAN NYDEGGER & SEELEY
60 EAST SOUTH TEMPLE
1000 EAGLE GATE TOWER
SALT LAKE CITY, UT 84111

UNITED STATES PATENT AND TRADEMARK OFFICE

Commissioner for Patents
United States Patent and Trademark Office
P.O. Box 1450
Alexandria, VA 22313-1450
www.uspto.gov

WORKMAN NYDEGGER/MICROSOFT
1000 EAGLE GATE TOWER
60 EAST SOUTH TEMPLE
SALT LAKE CITY, UT 84111

COPY MAILED

MAR 2 0 2007

OFFICE OF PETITIONS

In re Application of
Kothari, Lin, Guthrie, and Warren
Application No.: 10/410,099
Filed: April 8, 2003
Attorney Docket No: 13768.360
For: INTERGRATING ONLINE COMMUNITY AND PROGRAM DEVELOPMENT ENVIRONMENTS

: DECISION ACCORDING
: RULE 47(a) STATUS

This is in response to the petition under 37 CFR 1.47(a), filed July 1, 2003, and in duplicate on November 9, 2006.

The petition is **GRANTED**.

The above-identified application and papers have been reviewed and found in compliance with 37 CFR 1.47(a). This application is hereby accorded Rule 1.47(a) status.

The above-cited application was filed on April 8, 2003, without a proper oath or declaration. A Notice to File Missing Parts of Nonprovisional Application was mailed on June 5, 2003, requiring a properly executed oath or declaration and surcharge. The notice allowed an extendable period for reply of two months from its mailing date. The instant petition was filed responsively on June 5, 2003.

Petitioner has shown that inventor Warren has constructively refused to join the prosecution of the application. The above-identified application and papers have been reviewed and found in compliance with 37 CFR 1.47(a). This application is hereby accorded Rule 1.47(a) status.

As provided in Rule 1.47(c), this Office will forward notice of this application's filing to the non-signing inventor at the addresses given in the petition. Notice of the filing of this application will also be published in the Official Gazette.

The fee for the instant petition is $130.00. Deposit account 23-3178 will be charged for the petition fee, accordingly.

This application will be directed to Technology Center 2100, GAU 2157 for further processing.

Telephone inquiries regarding this decision should be directed to the undersigned at (571) 272-3222.

Kenya A. McLaughlin
Petitions Attorney
Office of Petitions

UNITED STATES PATENT AND TRADEMARK OFFICE

Commissioner for Patents
United States Patent and Trademark Office
P.O. Box 1450
Alexandria, VA 22313-1450
www.uspto.go

Susan Warren
10809 W. Snoq Valley NE
Carnation, Washington 98014

COPY MAILED
MAR 2 0 2007
OFFICE OF PETITIONS

In re Application of :
Kothari, Lin, Guthrie, and Warren :
Application No.: 10/410,099 : LETTER
Filed: April 8, 2003 :
Attorney Docket No: 13768.360 :
For: INTERGRATING ONLINE COMMUNITY AND PROGRAM DEVELOPMENT ENVIRONMENTS

Dear Inventor Warren:

You are named as a joint inventor in the above-identified United States patent application filed under the provisions of 35 U.S.C. 116 (United States Code) and 37 CFR 1.47(a), Rules of Practice in Patent Cases. Should a patent be granted on the application you will be designated therein as a joint inventor.

As a joint inventor, you are entitled to inspect any paper in the file wrapper of the application, order copies of all or any part thereof (at a prepaid cost per 37 CFR 1.19) or make your position of record in the application. Alternatively, you may arrange to do any of the preceding through a registered patent attorney or agent presenting written authorization from you. If you care to join the application, counsel of record (see below) would presumably assist you. Joining in the application would entail the filing of an appropriate oath or declaration by you pursuant to 37 CFR 1.63.

Telephone inquiries regarding this communication should be directed to Petitions Attorney Kenya A. McLaughlin at (571) 272-3222. Requests for information regarding your application should be directed to the File Information Unit at (703) 308-2733. Information regarding how to pay for and order a copy of the application, or a specific paper in the application, should be directed to Certification Division at (703) 308-9726 or 1-800-972-6382 (outside the Washington D.C. area).

Kenya A. McLaughlin
Petitions Attorney
Office of Petitions

WORKMAN NYDEGGER/MICROSOFT
1000 EAGLE GATE TOWER
60 EAST SOUTH TEMPLE
SALT LAKE CITY, UT 84111

UNITED STATES PATENT AND TRADEMARK OFFICE

COMMISSIONER FOR PATENTS
UNITED STATES PATENT AND TRADEMARK OFFICE
P.O. BOX 1450
ALEXANDRIA, VA 22313-1450
www.uspto.gov

COPY MAILED

AUG 10 2005

OFFICE OF PETITIONS

GREENBERG TRAURIG, LLP
77 WEST WACKER DRIVE
SUITE 2500
CHICAGO, IL 60601-1732

In re Application of Masters, et al. Application No. 10/410,103 Filed: April 9, 2003 Attorney Docket No.: 81230.86US2	DECISION GRANTING PETITION UNDER 37 CFR 1.137(f)

This decision is in response to the petition under 37 CFR 1.137(f), filed June 20, 2005.

The petition is hereby **GRANTED**.

Petitioners state that the instant nonprovisional application is the subject of an application filed January 2, 2004 in a foreign country, or under a multinational treaty, that requires publication of applications eighteen months after filing (PCT/US04/00091). Petitioners' further state that petitioners unintentionally failed to notify the Office of this filing within 45 days of the filing of the subject application in a foreign country.

Hence, the application became abandoned pursuant to 35 USC 122(b)(2)(B)(iii) and 37 CFR 1.213(c) for failure to timely notify the Office of the filing of an application in a foreign country, or under a multilateral international agreement that requires publication of applications 18 months after filing.

A grantable petition under 37 CFR 1.137(f) must be accompanied by: (1) the reply; (2) the petition fee; (3) a statement that the entire delay in filing the required reply from the due date of the reply until the filing of a grantable petition was unintentional; and (4) any terminal disclaimer (and fee as set forth in § 1.20(d)) required pursuant to 37 CFR 1.137(d).

The instant petition has been reviewed and found to be in compliance with the provisions of 37 CFR 1.137(f). Accordingly, the failure to timely notify the Office of a foreign or international filing within 45 days after the date of filing of

such foreign or international application as provided by 35 USC 122(b)(2)(B)(iii) and 37 CFR 1.213(c) is accepted as having been unintentionally delayed.

The previous Request and Certification under 35 USC 122(b)(2)(B)(i) was been rescinded June 20, 2005.

This application is being forwarded to Technology Center 2100 for further processing.

Telephone inquiries related to this decision may be directed to the undersigned at (571) 272-3205.

Alesia M. Brown
Petitions Attorney
Office of Petitions

UNITED STATES PATENT AND TRADEMARK OFFICE

Commissioner for Patents
United States Patent and Trademark Office
P.O. Box 1450
Alexandria, VA 22313-1450
www.uspto.gov

VINCENT L. CARNEY LAW OFFICE
P.O. BOX 80836
LINCOLN NE 68501-0836

JUN 0 4 2007

In re Application of:
KRUMREI, TERRY LEE
Serial No.: 10/410,118
Filed: April 9, 2003
Docket: 920-1-1-1
Title: APPARATUS AND METHOD FOR COMBUSTION

DECISION ON PETITION TO ENTER AMENDMENT AFTER FINAL

This is a decision on the petitions filed on Jun. 9, 2005 and Jan. 3, 2007 to enter the amendment after final under 37 CFR 1.116 and withdraw the objection to the drawings. In the alternative, petitioner requested the withdrawal of the final Office action to allow re-opening prosecution. The petitions are considered pursuant to 37 CFR 1.181 and no fee is required. Two petition fees paid, $800.00 will be refunded to the deposit account of record.

The petitions are **DISMISSED**.

In the petitions, petitioner requests a review of the examiner's objection to the drawings under 37 CFR 1.83(a) because the drawings did not illustrate all claimed features in claims 3 and 15. Petitioner also requests the Office to enter the concurrently filed proposed amendment to the specification under Rule 116(a) because the final Office action was believed to be premature. It is noted the concurrently filed proposed amendment under Rule 1.116 of Jun 9, 2005 is same as the amendment after final filed on May 25, 2005.

The record shows that:

1) In response to a first non-final Office action of March 2, 2004, the applicant on June 1, 2004 filed an amendment to claims 2-12 and added new claims 13-14 with cancellation of claim 1. Only claims 2-14 remained in the case.
2) On July 23, 2004, the examiner issued a second non-final Office action. The examiner rejected claims 3, 4, 7-12 and allowed claims 2, 5, 6, 13-14.
3) In response, the applicant filed an amendment to the claims on Oct. 29, 2004 with substantial additions to claims 3, 7 and 12 and added two new independent claims 15-16. In particular, in the amendment, *inter alia*, claim 3 contains newly added limitation regarding "said first bottom wall having a plurality of first openings extending between

the second bottom wall and an interior of the burnpot, whereby air may pass from the airspace into the burnpot and the first bottom wall may hold the solid byproduct of combustion and at least one second opening between the airspace and said source of combustible air whereby air may pass from the source of combustible air and the airspace; and said second bottom wall being without substantial opening whereby the combustible air is prevented from passing into the firebox". The new independent claim 15 also contains similar limitations.

4) On Dec. 13, 2004, the examiner issued a final Office action rejecting claims 3, 4, 12, 15-16 under the same prior art used in the previous non-final Office action of July 23, 2004. In the final Office action, the examiner also allowed claim 7 and indicated claims 2, 5, 6, 8-11 and 13-14 to be allowable. The examiner further objected to the drawings under 37 CFR 1.83(a) for failure to illustrate the claimed features and rejected newly amended claims 3, 12 and 15 under 35 USC 112, first paragraph for failure to describe the claimed subject matter in the originally filed specification. In particular, the applicant failed to illustrate and described the newly added limitation regarding "said first bottom wall having a plurality of first openings extending between the second bottom wall and an interior of the burnpot, whereby air may pass from the airspace into the burnpot and the first bottom wall may hold the solid byproduct of combustion and at least one second opening between the airspace and said source of combustible air whereby air may pass from the source of combustible air and the airspace; and said second bottom wall being without substantial opening whereby the combustible air is prevented from passing into the firebox".
5) In response to the final Office action of Dec. 13, 2004, the applicant filed the first amendment under Rule 1.116(a) on Jan. 27, 2005 with amendments to the claims 2-4 and 16. In the Rule 1.116(a) amendment, the applicant also made substantial arguments regarding the drawing objection and claim rejections.
6) Subsequently, the examiner issued an Advisory Action on March 3, 2005 advising the applicant that the amendment after final filed on Jan. 27, 2005 will be entered for appeal purposes (see paragraph 7 of advisory action).
7) On June 9, 2005, the current petition was filed to request entry of the amendment after final filed concurrently with this petition. This amendment after final of Jun. 9, 2005 is identical to the amendment after final filed on May 25, 2005.
8) On Dec. 1, 2006, the examiner issued another advisory action advising the applicant that the second amendment after final filed on May 25, 2005 will not be entered because the applicant appears to be attempting to add to the specification the same limitations that were added to the claims of Oct. 29, 2004 and resulted in a new matter rejection to the claims and a drawing objection of claimed but not shown material in the final rejection of Dec. 13, 2004. Therefore, the amendment will not be entered. It is noted that this amendment after final filed on May 25, 2005 is same as the amendment after final filed with the first petition on Jun. 9, 2005 and also same as the amendments after final filed on Dec. 29, 2006 and Jan. 3, 2007 with the latest petition.
9) On Jan. 3, 2007, the applicant filed a second petition requesting the same relief as stated in the first petition filed on Jun. 9, 2005.

Applicable of Rules and MPEP

MPEP 706.07(a) states in relevant part: "Under present practice, second or any subsequent actions on the merits shall be final, *except where the examiner introduces a new ground of rejection that is neither necessitated by applicant's amendment of the claims* nor based on information submitted in an information disclosure statement filed during the period set forth in 37 CFR 1.97(c) with the fee set forth in 37 CFR 1.17(p)." (*Emphasis added*).

Relevant portions of 37 CFR § 1.116 Amendments and affidavits or other evidence after final action and prior to appeal, state: (a) An amendment after final action must comply with §1.114 or this section. (b) After a final rejection or other final action (§ 1.113) in an application or in an ex parte reexamination filed under § 1.510, or an action closing prosecution (§ 1.949) in an inter partes reexamination filed under § 1.913, but before or on the same date of filing an appeal (§41.31 or § 41.61 of this title): (1) An amendment may be made canceling claims or complying with any requirement of form expressly set forth in a previous Office action; (2) An amendment presenting rejected claims in better form for consideration on appeal may be admitted; or (3) An amendment touching the merits of the application or patent under reexamination may be admitted upon a showing of good and sufficient reasons why the amendment is necessary and was not earlier presented.

MPEP 2163.06 Relationship of Written Description Requirement to New Matter
II. REVIEW OF NEW MATTER OBJECTIONS AND/OR REJECTIONS
A rejection of claims is reviewable by the Board of Patent Appeals and Interferences, whereas an objection and requirement to delete new matter is subject to supervisory review by petition under 37 CFR 1.181. If both the claims and specification contain new matter either directly or indirectly, and there has been both a rejection and objection by the examiner, the issue becomes appealable and should not be decided by petition.

Analysis of Records

With regard to the propriety of the final rejection of Dec. 13, 2004, the issue is whether the final rejection was necessitated by the applicant's amendment of Oct. 29, 2004. The amendment of Oct. 29,2004 contains newly added independent claims 15 and 16. The applicant did not amend claim 4 and the examiner maintained his rejection of claim 4 with no changes from the second non-final Office action. However, the applicant added substantial materials in claims 3 and 12. The examiner found the added material and the new independent claim 15 as new matter and not supported by the original specification. The examiner also raised the drawing objection under Rule 1.83(a) in the final rejection of Dec. 13, 2004. In view of the applicant's addition to the claims for the first time, the examiner could not have raised the objection to the drawings and the rejection of claims 3, 12 and 15. Therefore, the objection to drawings and rejection of claims 3, 12, 15 and 16 were necessitated by the applicant's amendment of Oct. 29, 2004. The final Office action was properly made final in accordance with MPEP 706.07(a).

Regarding the amendment after final of May 25, 2005, the amendment contains many additions to the specification and nothing to the claims. This appears to be applicant's attempt to add languages similar to claims 3, 12 and 15 in the specification to overcome the examiner's

objection to the drawings and rejection of claims 3, 12 and 15. In particular, the additions at the bottom of page 3 and the top of page 4 of the specification are similar in context to claims 3 and 15. In the amendment, the applicant emphasized that Figs. 4, 7 and 9 do illustrate and describe the contents of the rejected claims 3, 12 and 15 under 35 USC 112, first paragraph for failing to comply with the written description requirement. The amendment after final does not seek any changes to the claims at issue for the purposes as stated in 37 CFR 1.116 and entry of such amendment after final rejection is not a matter of right. Therefore, the amendment does not satisfy any of the conditions of 37 CFR 1.116, then, the refusal to enter this amendment after final of May 25, 2005 was proper.

Finally, the propriety of the current petitions are also in question because the issues presented in this application remain the same, e.g. objection to the drawings for not illustrating the added claim subject matter and rejection of claims for new matter added. Under the circumstances, the petitioner's relief sought must be obtained through the appeal of the finally rejected claims to the Board of Appeals and Interferences in accordance with MPEP 2163.06.

Accordingly, the petition is dismissed.

Any request for reconsideration of this decision must be submitted within TWO (2) MONTHS from the mail date of this decision, 37 CFR 1.181(f). No extension of time under 37 CFR 1.136(a) is permitted. The reconsideration request should include a cover letter entitled "Renewed Petition under 37 CFR 1.181. Any inquiry regarding this decision should be directed to Henry Yuen, Special Program Examiner, at (571) 272-4856.

Karen M. Young

Karen M. Young, Director
Technology Center 3700

UNITED STATES PATENT AND TRADEMARK OFFICE

Commissioner for Patents
United States Patent and Trademark Office
P.O. Box 1450
Alexandria, VA 22313-1450
www.uspto.gov

VINCENT L. CARNEY LAW OFFICE
P.O. BOX 80836
LINCOLN NE 68501-0836

In re Application of:
KRUMREI, TERRY LEE
Serial No. 10/410,118
Filed: April 9, 2003
Docket: 920-1-1-1
Title: APPARATUS AND METHOD FOR COMBUSTION

9/23/09

DECISION ON PETITION
UNDER 37 CFR § 1.181

This is a decision on the petition filed September 17, 2009 under 37 CFR 1.181 requesting withdrawal of drawing objection under 37 CFR 1.83(a).

The petition is **Granted.**

In finding petitioner's points of argument persuasive and in view of the decision rendered by the Board of Patent Appeals and Interferences on March 24, 2009, the requested relief is granted. In particular, on page 4 of the Board decision, the Board stated that the Specification and drawings as originally filed convey possession of the subject matter of claims 3 and 15. The Board also reversed the examiner's rejections under 35 USC 112. Therefore, the examiner's drawing objection under 37 CFR 1.83(a) mailed on July 20, 2009 is moot and hereby withdrawn. The application is now in condition for allowance as is and no further amendment is necessary.

The application has been forwarded to the examiner in charge for preparation of Office action. Any inquiry regarding this decision should be directed to Henry C. Yuen, Special Programs Examiner, at (571) 272-4856.

PETITION GRANTED.

Karen M. Young, Director
Technology Center 3700

UNITED STATES PATENT AND TRADEMARK OFFICE

Commissioner for Pat nts
United States Patent and Trademark Office
P.O. Box 1450
Alexandria, VA 22313-1450
www.uspto.gov

CONLEY ROSE PC
ATTN: ANN MARIE MEWHERTER
PO BOX 684908
AUSTIN TX 78768

COPY MAILED

JUN 26 2006

OFFICE OF PETITIONS

In re Application of	:	
Steven R. Lange	:	
Application No. 10/410,126	:	DECISION ON PETITION
Filed: April 8, 2003	:	
Attorney Docket No. 5589-06200/P1102	:	

This is a decision on paper titled "RESPONSE TO NOTICE OF ABANDONMENT MAILED DECEMBER 28, 2005", filed January 23, 2006, which is being treated as a petition to withdraw the holding of abandonment under 37 CFR 1.181.

The petition is **GRANTED**.

The above-identified application became abandoned for failure to timely file a proper response to the non-final Office action, mailed June 14, 2005, which set a shortened statutory period for reply of three (3) months. No extensions of time under the provisions of 37 CFR 1.136(a) were obtained. Accordingly, the above-identified application became abandoned on September 15, 2005. A Notice of Abandonment was mailed on December 28, 2005.

Petitioner argues that the June 14, 2005 Office action was mailed to the incorrect address. The application file reveals that a Power of Attorney was filed on October 10, 2005, directing the Office to address all correspondence to the above address. However, the Power of Attorney was not entered and the June 14, 2005 Office action was mailed to the prior address of record.

In view thereof, **the holding of abandonment is withdrawn.**

The application file is being forwarded to Group Art Unit 2877 for re-mailing of the June 14, 2005 Office action, setting a new period for reply.

Telephone inquiries regarding this decision should be directed to the undersigned at (571)272-3207.

Cliff Congo
Petitions Attorney
Office of Petitions

UNITED STATES PATENT AND TRADEMARK OFFICE

Commissioner for Patents
United States Patent and Trademark Office
P.O. Box 1450
Alexandria, VA 22313-1450
www.uspto.gov

October 2004

Patent Administrator
KATTEN MUCHIN ZAVIS ROSENMAN
525 West Monroe Street, Suite 1600
Chicago, IL 60661-3693

OCT 8 2004

In re Application of:
Jules D. Levine et al.
Serial No.: 10/410,182
Filed: April 10, 2003
Attorney Docket No.: 213453.00034

DECISION ON PETITION
TO MAKE SPECIAL

This is a decision on the petition filed on June 19, 2003 under 37 C.F.R. § 1.102(d) requesting that the above identified application be granted special status and examined out of turn on the ground of actual infringement as set forth in MPEP § 708.02 II.

The petition is GRANTED.

MPEP § 708.02 II requires, besides a petition, petition fee and a copy of each of the references deemed most closely related to the subject matter encompassed by the claims, a statement by the applicant, assignee, or an attorney/agent registered to practice before the Office alleging:

(A) That there is an infringing device or product actually on the market or method in use;

(B) That a rigid comparison of the alleged infringing device, product or method with the claims of the application has been made, and that in his or her opinion, some of the claims are unquestionably infringed; and

(C) That he or she has made or caused to be made a careful and thorough search of the prior art or has good knowledge of the pertinent prior art.

The petition filed June 19, 2003 has been considered and found to comply with all the requirements set forth in MPEP § 708.02 II.

Edward Westin

Edward P. Westin, Special Programs Examiner
Technology Center 2800
Semiconductors, Electrical and
Optical Systems, and Components

MAILED

OCT 1 5 2004

OFFICE OF THE DIRECTOR
TC 3600

UNITED STATES PATENT AND TRADEMARK OFFICE

OCT 1 5 2004

Commissioner for Patents
United States Patent and Trademark Office
P.O. Box 1450
Alexandria, VA 22313-145

MILES & STOCKBRIDGE, PC
1751 PINNACLE DRIVE
SUITE 500
MCLEAN, VA 22102-3833

In re application of Katrina L. Dewar Application No. 10/410,184 Filed: April 10, 2003 For: COMPUTER-IMPLEMENTED SYSTEM FOR HUMAN RESOURCES MANAGEMENT	: DECISION ON REQUEST : FOR WITHDRAWAL OF : ATTORNEY :

This is a decision on the request filed on July 1, 2004, under 37 CFR 1.36 and MPEP 402.06, requesting permission to withdraw as the attorney of record in the above-identified application.

The request is **NOT APPROVED as MOOT**.

Under 37 CFR 1.36 an attorney may withdraw only upon application to and approval by the Commissioner. It should be noted that a withdrawal is effective when approved, not when filed. Besides giving due notice to his or her client and delivering to the client all papers and property to which the client is entitled as specified under 37 CFR 10.40, approval of such a request requires that the following conditions be met:

A) Each attorney of record must sign the notice of withdrawal, or the notice must contain a clear indication of one attorney signing on behalf of another, because the Office does not recognize law firms;

B) A proper reason for the withdrawal as enumerated in 37 CFR 10.40(b) or subsection (1)-(6) of 37 CFR 10.40(c) must be provided; and

C) If withdrawal is requested in accordance with 37 CFR 10.40(c) above, there must be at least 30 days between approval of the withdrawal and the later of the expiration date of a time period for reply or the expiration date of the period which can be obtained by a petition and fee for extension of time under 37 CFR 1.136(a).

The request to withdraw as attorney in the above-identified application is not approved as moot because the attorney making the request; James T. Carmichael, does not now have, and apparently never has had, power of attorney in this application. There is no documentation in the file of power of attorney being given to James T. Carmichael, or anyone else for that matter.

Steven N. Meyers
Special Programs Examiner
Patent Technology Center 3600
(703) 308-3868
(703) 605-0586 (facsimile)

SNM/dcg: 10/12/04

SPE RESPONSE FOR CERTIFICATE OF CORRECTION

DATE : 5-2-07

Paper No.: _____

TO SPE OF : **Technology Center** 3653

10/410201

SUBJECT : Request for Certificate of Correction on Patent No.: 7134659 B2

A response is requested with respect to the accompanying request for a certificate of correction.

Please complete this form and return with file, within **7** days to:

Palm location **7580, Certificates of Correction Branch – South Tower – 9A22**

If response is for an IFW, **return to employee (named below) via PUBSCofC Team in MADRAS.**

With respect to the change(s) requested, correcting Office and/or Applicant's errors, should the patent read as shown in the certificate of correction (COCIN)? No new matter should be introduced, nor should the scope or meaning of the claims be changed.

Elisha Evans

Thank You For Your Assistance

Certificates of Correction Branch

Tel. No. 703-308-9390 EXT 110

The request for issuing the above-identified correction(s) is hereby:

Note your decision on the appropriate box.

- ☒ **Approved** — **All** changes apply.
- ☐ **Approved in Part** — Specify below which changes **do not** apply.
- ☐ **Denied** — State the reasons for denial below.

Comments:

_____

_____

_____

_____

_____

SPE _____ **Art Unit** 3653

UNITED STATES PATENT AND TRADEMARK OFFICE

Commissioner for Patents
United States Patent and Trademark Office
P.O. Box 1450
Alexandria, VA 22313-1450
www.uspto.gov

FITZPATRICK CELLA HARPER & SCINTO
30 ROCKEFELLER PLAZA
NEW YORK NY 10112

COPY MAILED

DEC 12 2006

OFFICE OF PETITIONS

In re Patent No. 7,055,815
Kaoru Sato et al.
Issue Date: June 6, 2006
Application No. 10/410,202
Filed: April 10, 2003
Attorney Docket No. 01306.000086

: DECISION ON APPLICATION FOR
: PATENT TERM ADJUSTMENT
: AND
: NOTICE OF INTENT TO ISSUE
: CERTIFICATE OF CORRECTION

This is a decision on the "REQUEST FOR RECONSIDERATION OF PATENT TERM ADJUSTMENT UNDER 37 CFR § 1.702(2)," filed August 7, 2006. Patentees request that the determination of patent term adjustment under 35 U.S.C. 154(b) be corrected from two hundred five (205) days to three hundred (300) days.

The request for reconsideration of the patent term adjustment indicated on the patent is **GRANTED**.

The patent term adjustment indicated on the patent is to be corrected by issuance of a certificate of correction showing a revised Patent Term Adjustment of three hundred **(300)** days.

On June 6, 2006, the above-identified application matured into U.S. Patent No. 7,055,815. The instant request for reconsideration filed August 7, 2006 was timely filed within two months of the date the patent issued. See § 1.705(d). The Patent issued with a revised Patent Term Adjustment of 205 days. Patentee states that the patent term adjustment should not have been reduced by 95 days for the submission of a "Miscellaneous Incoming Paper" after the Notice of Allowance, as the only paper filed after the mailing of the Notice of Allowance was a "Request for Corrected Notice of Allowability".

Patentees' argument is well-taken. As stated in MPEP 2732, the submission of the following papers after a "Notice of Allowance" is not considered a failure to engage in reasonable efforts to conclude processing or examination of an application: (1) Fee(s) Transmittal (PTOL-85B); (2) Power of Attorney; (3) Power to Inspect; (4) Change of Address; (5) Change of Status (small/not small entity status); (6) a response to the examiner's reasons for allowance or a request to correct an error or omission in the

"Notice of Allowance" or "Notice of Allowability;" and (7) letters related to government interests (e.g., those between NASA and the Office). A review of the application record reveals that the reduction of 95 days was based on the filing after allowance of a request for correction of an error in the Notice of Allowability filed October 4, 2005. Thus, it is concluded that the patent term adjustment should not have been reduced by 95 days.

In view thereof, the patent term adjustment indicated on the patent should have been three hundred **(300)** days.

The $200.00 fee set forth in 37 CFR 1.18(e) has been applied. No additional fees are required.

The application file is being forwarded to the Certificates of Correction Branch for issuance of a certificate of correction in order to rectify this error. See 35 U.S.C. § 254 and 37 CFR § 1.322. The Office will issue a certificate of correction indicating that the term of the above-identified patent is extended or adjusted by three hundred **(300)** days.

Telephone inquiries specific to this matter should be directed to Senior Petitions Attorney, Patricia Faison-Ball at (571) 272-3212.

Nancy Johnson
Senior Petitions Attorney
Office of Petitions

Enclosure: Copy of DRAFT Certificate of Correction

DRAFT

UNITED STATES PATENT AND TRADEMARK OFFICE

CERTIFICATE OF CORRECTION

PATENT : 7,055,815 B2

DATED : June 6, 2006

INVENTOR(S) : Kaoru Sato

It is certified that error appears in the above-identified patent and that said Letters Patent is hereby corrected as shown below:

On the cover page,

[*] Notice: Subject to any disclaimer, the term of this patent is extended or adjusted under 35 USC 154(b) by (205) days

Delete the phrase "by 205 days" and insert – by 300 days--

UNITED STATES PATENT AND TRADEMARK OFFICE

Commissioner for Patents
United States Patent and Trademark Office
P.O. Box 1450
Alexandria, VA 22313-1450
www.uspto.gov

HONEYWELL INTERNATIONAL INC.
101 COLUMBIA ROAD
PO BOX 2245
MORRISTOWN NJ 07962-2245

COPY MAILED

NOV 2 4 2004

OFFICE OF PETITIONS

In re Application of	:	
Andrzej Peczalski et al	:	
Application No. 10/410,204	:	ON PETITION
Filed: April 10, 2003	:	
Attorney Docket No. H0005003	:	

This is a decision on the petition, filed November 15, 2004, under 37 CFR 1.313(c)(2) to withdraw the above-identified application from issue after payment of the issue fee. This application issued into Patent No. 6,818,061 on November 16, 2004.

The petition is **DISMISSED as moot.**

Unfortunately, the petition reached the appropriate official for decision after the patent issued on the above-identified application.[1] The inconvenience caused petitioner in this matter is sincerely regretted.

The information disclosure statement (IDS) has been placed in the file of the above-identified application without further consideration. See 37 CFR 1.97(i).

The Request for Continued Examination (RCE) submitted with the petition is not effective and will not be entered since the petition to withdraw from issue is dismissed. Therefore, the filing fee of the RCE will be credited to deposit account no. 50-1390 as authorized.

Petitioner is reminded that petitions to withdraw from issue should either be faxed to the Office of Petitions at (571) 273-0025 or hand carried to Madison Building West, 600 Dulany St., Alexandria Va 22314.

Petitioner's attention is directed to 37 CFR 1.313(d), which states: A petition under this section [37 CFR 1.313(c)] will not be effective to withdraw the application from issue unless it is actually received and granted by the appropriate officials before the date of issue."

---

[1] The instant petition was received in the Office of Petitions, on November 22, 2004.

Telephone inquiries concerning this decision should be directed to the undersigned at (571) 272-3208.

The patented file is being referred to Files Repository.

Karen Creasy

Karen Creasy
Petitions Examiner
Office of Petitions
Office of the Deputy Commissioner
for Patent Examination Policy

UNITED STATES PATENT AND TRADEMARK OFFICE

Commissioner for Patents
United States Patent and Trademark Office
P.O. Box 1450
Alexandria, VA 22313-1450
www.uspto.gov

BOMBARDIER RECREATIONAL PRODUCTS
INTELLECTUAL PROPERTY DEPT.
P.O. BOX 230
NORTON VT 05907-0230

COPY MAILED

OCT 0 6 2005

OFFICE OF PETITIONS

In re Application of	:	
Stephane Sanschagrin et al	:	
Application No. 10/410,236	:	ON PETITION
Filed: April 10, 2003	:	
Attorney Docket No. P 302813/RP-01053-US3	:	

This is a decision on the petition, filed October 5, 2005, under 37 CFR 1.313(c)(2) to withdraw the above-identified application from issue after payment of the issue fee.

The petition is **GRANTED**.

The above-identified application is withdrawn from issue for consideration of a submission under 37 CFR 1.114 (request for continued examination). See 37 CFR 1.313(c)(2).

Petitioner is advised that the issue fee paid on February 18, 2005 in the above-identified application cannot be refunded. If, however, the above-identified application is again allowed, petitioner may request that it be applied towards the issue fee required by the new Notice of Allowance.[1]

Telephone inquiries should be directed to the undersigned at (571) 272-3208.

The examiner of Technology Center AU 3617 will consider the request for continued examination under 37 CFR 1.114.

Karen Creasy

Karen Creasy
Petitions Examiner
Office of Petitions
Office of the Deputy Commissioner
for Patent Examination Policy

---

[1] The request to apply the issue fee to the new Notice may be satisfied by completing and returning the new Issue Fee Transmittal Form PTOL-85(b), which includes the following language thereon: "Commissioner for Patents is requested to apply the Issue Fee and Publication Fee (if any) or re-apply any previously paid issue fee to the application identified above." Petitioner is advised that, whether a fee is indicated as being due or not, the Issue Fee Transmittal Form **must** be completed and timely submitted to avoid abandonment. Note the language in bold text on the first page of the Notice of Allowance and Fee(s) Due (PTOL-85).

Under the Paperwork Reduction Act of 1995, no persons are required to respond to a collection of information unless it displays valid OMB control number.

PETITION TO ACCEPT UNINTENTIONALLY DELAYED PAYMENT OF MAINTENANCE FEE IN AN EXPIRED PATENT (37 CFR 1.378(c))

Patent Number	Issue Date (YYYY-MM-DD)	Application Number	Filing Date (YYYY-MM-DD)	Docket Number (if applicable)
6751531	2004-06-15	10410243	2003-04-10	0110347.00302US3

CAUTION: Maintenance fee (and surcharge, if any) payment must correctly identify: (1) the patent number and (2) the application number of the actual U.S. application leading to issuance of that patent to ensure the fee(s) is/are associated with the correct patent. 37 CFR 1.366(c) and (d).

SMALL ENTITY
☒ Patentee claims, or has previously claimed, small entity status. See 37 CFR 1.27.

LOSS OF ENTITLEMENT TO SMALL ENTITY STATUS
☐ Patentee is no longer entitled to small entity status. See 37 CFR 1.27(g)

NOT Small Entity		Small Entity	
Fee	Code	Fee	Code
○ 3 ½ year	(1551)	◉ 3 ½ year	(2551)
○ 7 ½ year	(1552)	○ 7 ½ year	(2552)
○ 11 ½ year	(1553)	○ 11 ½ year	(2553)

SURCHARGE
The surcharge required by 37 CFR 1.20(i)(2) (Fee Code 1558) must be paid as a condition of accepting unintentionally delayed payment of the maintenance fee.

MAINTENANCE FEE (37 CFR 1.20(e)-(g))
The appropriate maintenance fee must be submitted with this petition.

STATEMENT
THE UNDERSIGNED CERTIFIES THAT THE DELAY IN PAYMENT OF THE MAINTENANCE FEE TO THIS PATENT WAS UNINTENTIONAL

PETITIONER(S) REQUEST THAT THE DELAYED PAYMENT OF THE MAINTENANCE FEE BE ACCEPTED AND THE PATENT REINSTATED

THIS PORTION MUST BE COMPLETED BY THE SIGNATORY OR SIGNATORIES

37 CFR 1.378(d) states: "Any petition under this section must be signed by an attorney or agent registered to practice before the Patent and Trademark Office, or by the patentee, the assignee, or other party in interest."

I certify, in accordance with 37 CFR 1.4(d)(4) that I am

◉ An attorney or agent registered to practice before the Patent and Trademark Office

○ A sole patentee

○ A joint patentee; I certify that I am authorized to sign this submission on behalf of all the other patentees.

○ A joint patentee; all of whom are signing this e-petition

○ The assignee of record of the entire interest

Patent Practitioner			
A signature of the applicant or representative is required in accordance with 37 CFR 1.33 and 10.18. Please see 37 CFR 1.4(d) for the form of the signature			
Signature	/Irah H. Donner/	Date (YYYY-MM-DD)	2008-08-06
Name	Irah H. Donner	Registration Number	35120

This collection of information is required by 37 CFR 1.378(c). The information is required to obtain or retain a benefit by the public which is to file (and by the USPTO to process) an application. Confidentiality is governed by 35 U.S.C. 122 and 37 CFR 1.11 and 1.14. This collection is estimated to take 1 hour to complete, including gathering, preparing, and submitting the completed application form to the USPTO. Time will vary depending upon the individual case. Any comments on the amount of time you require to complete this form and/ or suggestions for reducing this burden, should be sent to the Chief Information Officer, U.S. Patent and Trademark Office, U.S. Department of Commerce, P.O. Box 1450, Alexandria, VA 22313-1450. DO NOT SEND FEES OR COMPLETED FORMS TO THIS ADDRESS. **This form can only be used when in conjunction with EFS-Web. If this form is mailed to the USPTO, it may cause delays in reinstating the patent.**

Privacy Act Statement

The Privacy Act of 1974 (P.L. 93-579) requires that you be given certain information in connection with your submission of the attached form related to a patent application or patent. Accordingly, pursuant to the requirements of the Act, please be advised that: (1) the general authority for the collection of this information is 35 U.S.C. 2(b)(2); (2) furnishing of the information solicited is voluntary; and (3) the principal purpose for which the information is used by the U.S. Patent and Trademark Office is to process and/or examine your submission related to a patent application or patent. If you do not furnish the requested information, the U.S. Patent and Trademark Office may not be able to process and/or examine your submission, which may result in termination of proceedings or abandonment of the application or expiration of the patent.

The information provided by you in this form will be subject to the following routine uses:

1. The information on this form will be treated confidentially to the extent allowed under the Freedom of Information Act (5 U.S.C. 552) and the Privacy Act (5 U.S.C. 552a). Records from this system of records may be disclosed to the Department of Justice to determine whether the Freedom of Information Act requires disclosure of these record s.

2. A record from this system of records may be disclosed, as a routine use, in the course of presenting evidence to a court, magistrate, or administrative tribunal, including disclosures to opposing counsel in the course of settlement negotiations.

3. A record in this system of records may be disclosed, as a routine use, to a Member of Congress submitting a request involving an individual, to whom the record pertains, when the individual has requested assistance from the Member with respect to the subject matter of the record.

4. A record in this system of records may be disclosed, as a routine use, to a contractor of the Agency having need for the information in order to perform a contract. Recipients of information shall be required to comply with the requirements of the Privacy Act of 1974, as amended, pursuant to 5 U.S.C. 552a(m).

5. A record related to an International Application filed under the Patent Cooperation Treaty in this system of records may be disclosed, as a routine use, to the International Bureau of the World Intellectual Property Organization, pursuant to the Patent Cooperation Treaty.

6. A record in this system of records may be disclosed, as a routine use, to another federal agency for purposes of National Security review (35 U.S.C. 181) and for review pursuant to the Atomic Energy Act (42 U.S.C. 218(c)).

7. A record from this system of records may be disclosed, as a routine use, to the Administrator, General Services, or his/her designee, during an inspection of records conducted by GSA as part of that agency's responsibility to recommend improvements in records management practices and programs, under authority of 44 U.S.C. 2904 and 2906. Such disclosure shall be made in accordance with the GSA regulations governing inspection of records for this purpose, and any other relevant (i.e., GSA or Commerce) directive. Such disclosure shall not be used to make determinations about individuals.

8. A record from this system of records may be disclosed, as a routine use, to the public after either publication of the application pursuant to 35 U.S.C. 122(b) or issuance of a patent pursuant to 35 U.S.C. 151. Further, a record may be disclosed, subject to the limitations of 37 CFR 1.14, as a routine use, to the public if the record was filed in an application which became abandoned or in which the proceedings were terminated and which application is referenced by either a published application, an application open to public inspections or an issued patent.

9. A record from this system of records may be disclosed, as a routine use, to a Federal, State, or local law enforcement agency, if the USPTO becomes aware of a violation or potential violation of law or regulation.

UNITED STATES PATENT AND TRADEMARK OFFICE

Commissioner for Patents
United States Patent and Trademark Office
P.O. Box 1450
Alexandria, VA 22313-1450
www.uspto.gov

In re Patent No. 6751531
Issue Date: June 15,2004
Application No. 10410243
Filed: April 10,2003
Attorney Docket No. 110347.302US3

:
:DECISION GRANTING PETITION
:UNDER 37 CFR 1.378(c)
:

This is a decision on the electronic petition, filed August 6,2008 ,under 37 CFR 1.378(c) to accept the unintentionally delayed payment of the 3.5 year maintenance fee for the above-identified patent.

The petition is GRANTED.

The maintenance fee is accepted, and the above-identified patent reinstated as of August 6,2008 . This decision also constitutes notice that the fee has been accepted. An electronic copy of the petition and this decision has been created as an entry in an Image File Wrapper. Nevertheless, petitioner should print and retain an independent copy

Telephone inquires related to this electronic decision should be directed to the Electronic Business Center at 1-866-217-9197.

UNITED STATES PATENT AND TRADEMARK OFFICE

Commissioner for Patents
United States Patent and Trademark Office
P.O. Box 1450
Alexandria, VA 22313-1450
www.uspto.gov

KIRKPATRICK & LOCKHART
PRESTON GATES ELLIS LLP
535 SMITHFIELD STREET
PITTSBURGH, PA 15222

COPY MAILED

AUG 20 2007

OFFICE OF PETITIONS

In re Application of

Banz, et al.

Application No. 10/410,268

Filed: April 10, 2003

Attorney Docket No. 050453DIV

: DECISION ON PETITION

This is a decision on the petition to withdraw the holding of abandonment under 37 CFR 1.181(a), filed on July 25, 2007.

The petition is **granted**.

This application was held abandoned on July 25, 2006, after no reply was received to the Notice of Allowance and Issue Fee Due mailed April 24, 2006. The notice set forth a statutory period for reply of three months from its mailing date. A Notice of Abandonment was mailed on December 6, 2006. The instant petition was filed on July 25, 2007. Petitioner maintains that the notice of April 24, 2006, was never received and provides a copy of the relevant docket records as proof of the same.

Section 711.03(c)(II) of the *Manual of Patent Examining Procedure* ("MPEP") provides that in order to establish non-receipt of an Office action so as prove that the imposition of a holding of abandonment is improper, petitioner must: 1) provide a statement to the Office indicating that the Office action was not received by petitioner; 2) include in the statement an attestation to the fact that a review of the file jacket and docket records maintained by petitioner indicates that the Office action was not received; and 3) provide a copy of the docket record where the non-received Office communication would have been entered had it been received and docketed.

Petitioner has met the burden of proof as established by Section 711.03(c)(II) of the MPEP. The holding of abandonment is, therefore, withdrawn.

The application file will be directed to Technology Center 1600, GAU 1655 for further processing, including remailing of the Notice of Allowance and Issue Fee Due and Notice of Allowability and resetting of the period for reply.

Questions concerning this decision should be directed to the undersigned at (571) 272-3222.

Kenya A. McLaughlin
Petitions Attorney
Office of Petitions

UNITED STATES PATENT AND TRADEMARK OFFICE

Commissioner for Patents
United States Patent and Trademark Office
P.O. Box 1450
Alexandria, VA 22313-1450
www.uspto.gov

KELLEY DRYE & WARREN LLP
400 ALTLANTIC STREET , 13TH FLOOR
STAMFORD CT 06901

MAILED

MAR 0 3 2009

OFFICE OF PETITIONS

In re Application of
SELINFREUND, Richard H. et al.
Application No. 10/410,318
Filed: April 09, 2003
Attorney Docket No. **VTI-113(US)**

DECISION ON PETITION
TO WITHDRAW
FROM RECORD

This is a decision on the Request to Withdraw as attorney or agent of record under 37 C.F.R. § 1.36(b), filed January 20, 2009 and re-submitted on February 04, 2009.

The request is **APPROVED**.

A grantable request to withdraw as attorney/agent of record must be signed by every attorney/agent seeking to withdraw or contain a clear indication that one attorney is signing on behalf of another/others. The Office requires the practitioner(s) requesting withdrawal to certify that he, she, or they have: (1) given reasonable notice to the client, prior to the expiration of the response period, that the practitioner(s) intends to withdraw from employment; (2) delivered to the client or a duly authorized representative of the client all papers and property (including funds) to which the client is entitled; and (3) notified the client of any responses that may be due and the time frame within which the client must respond, pursuant 37 CFR 10.40(c).

The request was signed by Hans-Peter Hoffmann on behalf of all attorneys of record who are associated with customer No. 47670. All attorneys/agents associated with the Customer Number 47670 have been withdrawn. Applicant is reminded that there is no attorney of record at this time.

The request to change the correspondence address of record is not acceptable as the requested correspondence address is not that of: (1) the first named signing inventor; or (2) an intervening assignee of the entire interest under 37 C.F.R 3.71. All future communications from the Office will be directed to the first named signing inventor at the first copied address below until otherwise properly notified by the applicant.

There is an outstanding Office action mailed February 18, 2009 that requires a reply from the applicant.

Telephone inquiries concerning this decision should be directed to Tredelle Jackson at 571-272-2783.

Tredelle D. Jackson
Paralegal Specialist
Office of Petitions

cc: **RICHARD H. SELINFREUND**
1285 MOOSE HILL ROAD
GULLFORD CT 06437

cc: **VERIFICATION TECHNOLOGIES, INC.**
25 MIDDLESEX TURNPIKE, UNIT 14
P.O. BOX 94
ESSEX CT 06426

UNITED STATES PATENT AND TRADEMARK OFFICE

Commissioner for Patents
United States Patent and Trademark Office
P.O. Box 1450
Alexandria, VA 22313-1450
www.uspto.gov

Paper No. 10

NILS V. JOHNSON, JR.
P.O. BOX 625
BURGESS, VA 22432

MAILED

MAY 28 2010

OFFICE OF PETITIONS

In re Patent No. 6,752,713 :
Issue date: June 22, 2004 :
Application No. 10/410,319 :
Filed: April 9, 2003 :
Attorney Docket No. N/A :
For: COOL AIR VENTILATION SYSTEM

REQUEST FOR INFORMATION

This request for information is mailed in response to the petition under 37 CFR 1.378(e), filed October 7, 2009, to accept the delayed payment of a maintenance fee for the above-identified patent.

Please respond within **TWO (2)** MONTHS from the mail date of this request for information. No extension of this two-month time limit can be granted under 37 CFR 1.136(a) or (b). This is **not** a final agency action within the meaning of 5 U.S.C. § 704.

The patent issued June 22, 2004. The first maintenance fee could have been paid from June 22, 2007 through December 22, 2007, or with a surcharge during the period from December 23, 2007 through June 22, 2008. Accordingly, the patent expired at midnight on June 23, 2008, for failure to timely submit the first maintenance fee.

A petition to accept the delayed payment of a maintenance fee under 35 U.S.C. § 41(c) and 37 CFR 1.378(b) must be accompanied by (1) an adequate showing that the delay was unavoidable, since reasonable care was taken to ensure that the maintenance fee would be paid timely and that the petition was filed promptly after the patentee was notified of, or otherwise became aware of, the expiration of the patent, (2) payment of the appropriate maintenance fee, unless previously submitted, and (3) payment of the surcharge set forth in 37 CFR 1.20(i)(1).

This petition lacks item (1) above.

The Director may accept late payment of the maintenance fee if the delay is shown to the satisfaction of the Director to have been "unavoidable". 35 U.S.C. § 41(c)(1).

Petitioner states that the delay in payment of the first maintenance fee was unavoidable due to petitioner's forgetfulness after petitioner suffered two heart attacks on April 18, 2005 and April 4, 2007.

The showing of record is inadequate to establish unavoidable delay within the meaning of 37 CFR 1.378(b)(3).

Petitioner must show that he was aware of the need to pay the maintenance fee, and to that end was tracking it, or had engaged someone to track it before the expiration, but when the fee came due, was "unavoidably" prevented from making the maintenance fee payment due to his medical conditions until the petition was filed.

The Office requires additional information regarding petitioner's tracking/docketing system. Petitioner states that he "was tracking the maintenance fee with a schedule, and did not need to have someone track it for me. ..." (renewed petition, p. 2). The Office requires more information regarding the method by which petitioner was tracking the fees. Maintenance fees are due many years after a patent issues. Maintenance fees are not like monthly bills where a creditor sends a request for payment on a regular basis. Maintenance fees are due on 4 year intervals. How did petitioner keep track of maintenance fee due dates? What system did petitioner have to remind him of the infrequent and far apart in time due dates? **Petitioner should provide the Office with copies of any records or methods which served as a reminder of the due dates of the maintenance fees.** Merely being aware that fees are due is not enough. There must be some sort of ***reminder system*** to alert a patentee that a fee is coming due.

If the reminder/docketing system was not reliable, then the issue of petitioner's forgetfulness is not salient to the analysis. In other words, if the reminder/docketing system would not have alerted a person without memory loss/forgetfulness that a fee was due, then the fact that petitioner had memory loss/forgetfulness has no bearing on the Office's conclusions. The "but for" causation of the failure to pay the maintenance fee would be the lack of a reliable reminder/docketing system, not health issues.

If petitioner did not employ a reliable reminder/docketing system, then petitioner is strongly encouraged to (1) file a petition under 37 CFR 1.378(c), which is a petition under the unintentional delay standard – a much more lenient standard-- and (2) withdraw the current petition under 37 CFR 1.378(e). If the petition under 37 CFR 1.378(e) is treated on the merits and a decision is issued, then petitioner will forfeit the $400.00 fee paid with the petition under 1.378(e). If petitioner withdraws the petition under 37 CFR 1.378(e), then the Office can apply all the fees previously paid in connection with the petition under 37 CFR 1.378(b) and the petition under 37 CFR 1.378(e) toward the fees due in connection with the newly filed petition under 37 CFR 1.378(c).

A blank copy of the form to use when filing a petition under 37 CFR 1.378(c) is enclosed. As stated above, the Office would apply the previously paid fees to the fees due connection with the newly filed petition under 37 CFR 1.378(c). Thus, petitioner would owe a **$540.00** balance [$1,640 unintentional delay surcharge + $490 maintenance fee – ($1,190 - $400) already paid] at the time the petition under 37 CFR 1.378(c) is filed.

Further correspondence with respect to this matter should be addressed as follows:

By mail: Mail Stop PETITION
Commissioner for Patents
Post Office Box 1450
Alexandria, VA 22313-1450

By hand: U.S. Patent and Trademark Office
Customer Service Window, Mail Stop Petition
Randolph Building
401 Dulany Street
Alexandria, VA 22314

By FAX: (571) 273-8300 – ATTN: Office of Petitions

The undersigned has attempted to contact petitioner by telephone at least five times over the course of a month. The line is always busy. If petitioner has any questions on how to proceed, petitioner is strongly encouraged to contact the undersigned at (571) 272-3230.

Shirene Willis Brantley

Shirene Willis Brantley
Senior Petitions Attorney
Office of Petitions

Enclosures: blank form PTO/SB/66 – PETITION TO ACCEPT UNINTENTIONALLY DELAYED PAYMENT OF MAINTENANCE FEE IN AN EXPIRED PATENT 37 CFR 1.378(c)

Privacy Act Statement

UNITED STATES PATENT AND TRADEMARK OFFICE

Commissioner for Patents
United States Patent and Trademark Office
P.O. Box 1450
Alexandria, VA 22313-1450
www.uspto.gov

Paper No. 8

Nils V. Johnson Jr.
10309 Wycliff Rd.
Richmond VA 23236-1933

COPY MAILED

SEP 22 2009

OFFICE OF PETITIONS
ON PETITION

In re Patent No. 6,752,713 :
Issue date: June 22, 2004 :
Application No. 10/410,319 :
Filed: April 9, 2003 :
Attorney Docket No. N/A :
For: COOL AIR VENTILATION SYSTEM

This is a decision on the petition under 37 CFR 1.378(b), filed April 15, 2009 (certificate of mailing date April 9, 2009), to accept an unavoidably delayed payment of a maintenance fee for the above-identified patent.

The petition is **DISMISSED.**

If reconsideration of this decision is desired, a petition for reconsideration under 37 CFR 1.378(e) must be filed within TWO (2) MONTHS from the mail date of this decision. No extension of this 2-month time limit can be granted under 37 CFR 1.136(a) or (b). **Any such petition for reconsideration must be accompanied by the petition fee of $400 as set forth in 37 CFR 1.17(f).** The petition for reconsideration should include an exhaustive attempt to provide the lacking item(s) noted below, since, after a decision on the petition for reconsideration, no further reconsideration or review of the matter will be undertaken by the Director.

The patent issued June 22, 2004. The first maintenance fee could have been paid from June 22, 2007 through December 22, 2007, or with a surcharge during the period from December 23, 2007 through June 22, 2008. Accordingly, the patent expired at midnight on June 23, 2008, for failure to timely submit the first maintenance fee.

A petition to accept the delayed payment of a maintenance fee under 35 U.S.C. § 41(c) and 37 CFR 1.378(b) must be accompanied by (1) an adequate showing that the delay was unavoidable, since reasonable care was taken to ensure that the maintenance fee would be paid timely and that the petition was filed promptly after the patentee was notified of, or otherwise became aware of, the expiration of the patent, (2) payment of the appropriate maintenance fee, unless previously submitted, and (3) payment of the surcharge set forth in 37 CFR 1.20(i)(1).

This petition lacks item (1) above.

The Director may accept late payment of the maintenance fee if the delay is shown to the satisfaction of the Director to have been "unavoidable". 35 U.S.C. § 41(c)(1).

Petitioner states that the delay in payment of the first maintenance fee was unavoidable due to petitioner's forgetfulness after petitioner suffered two heart attacks on April 18, 2005 and April 4, 2007.

The showing of record is inadequate to establish unavoidable delay within the meaning of 37 CFR 1.378(b)(3).

Acceptance of late payment of a maintenance fee is considered under the same standard as that for reviving an abandoned application under 35 U.S.C. § 133 because 35 U.S.C. § 41(c)(1) uses the identical language, i.e. "unavoidable delay". Ray v. Lehman, 55 F.3d 606, 608-09, 34 USPQ2d 1786, 1787 (Fed. Cir. 1995)(quoting In re Patent No. 4,409,763, 7 USPQ2d 1798, 1800 (Comm'r Pat. 1988)). Decisions on reviving abandoned applications have adopted the "reasonably prudent person" standard in determining if the delay in responding to an Office action was unavoidable. Ex parte Pratt, 1887 Dec. Comm'r Pat. 31, 32-33 (Comm'r Pat. 1887)(the term "unavoidable" "is applicable to ordinary human affairs, and requires no more or greater care or diligence than is generally used and observed by prudent and careful men in relation to their most important business"); In re Mattullath, 38 App. D.C. 497, 514-515 (D.C. Cir. 1912); and Ex parte Henrich, 1913 Dec. Comm'r Pat. 139, 141. In addition, decisions on revival are made on a "case-by-case basis, taking all the facts and circumstances into account." Smith v. Mossinghoff, 671 F.2d 533, 538, 213 USPQ 977, 982 (D.C. Cir. 1982). Finally, a petition to revive an application as unavoidably abandoned cannot be granted where a petitioner has failed to meet his or her burden of establishing the cause of the unavoidable delay. Haines v. Quigg, 673 F. Supp. 314, 316-17, 5 USPQ2d 1130, 1131-32 (N.D. Ind. 1987).

In essence, petitioner must show that he was aware of the need to pay the maintenance fee, and to that end was tracking it, or had engaged someone to track it before the expiration, but when the fee came due, was "unavoidably" prevented from making the maintenance fee payment due to his medical conditions until the petition was filed.

In determining whether a delay in paying a maintenance fee was unavoidable, one looks to whether the party responsible for payment of the maintenance fee exercised the due care of a reasonably prudent person. Ray, 55 F3d at 608-609, 34 USPQ2D at 1787. It is incumbent upon the patent owner to implement steps to schedule and pay the fee, or obligate another to do so. See California Medical Products v. Technol. Med. Prod., 921 F.Supp 1219, 1259 (D. Del. 1995). That is, 37 CFR 1.378(b)(3) requires a showing of the steps in place to pay the maintenance fee, and the record currently lacks a showing that any steps were emplaced by petitioner or anyone else. In the absence of a showing that petitioner or anyone else was engaged in tracking the maintenance fee due dates, and that party had in fact been tracking the due dates with a reliable tracking system, such as would be used by prudent and careful men in relation to their most important business, petitioner cannot reasonably show that the delay was unavoidable delay. In re Katrapat, 6 USPQ2d 1863, 1867-1868 (Comm'r Pat. 1988); California, supra.

Petitioner should note that under the circumstances of this case, he will have to provide ***documents from licensed health care providers, demonstrating the nature and extent of petitioner's incapacitation***, in such a manner that petitioner was, until the filing of the petition on April 9, 2009, prevented from taking any earlier action with respect to this patent.

The first maintenance fee could have been paid from June 22, 2007 through December 22, 2007, or with a surcharge during the period from December 23, 2007 through June 22, 2008. Petitioner states that since the second heart attack on April 4, 2007, he has suffered a noticeable form of forgetfulness. Did petitioner's forgetfulness impact his ability to schedule the maintenance fee payment in a reliable docketing system? The maintenance fee due date should have been docketed much earlier than when the June 22, 2007 window for payment opened up. When exactly did the forgetfulness begin? When was petitioner cognizant of the forgetfulness?

Additionally, petitioner must state how he managed to conduct his daily personal and business affairs, including scheduling and settlement of short and long term debts and business obligations, bills, rent or mortgage payments, income taxes etc., while he suffered "forgetfulness." Did petitioner fail to make other payments due during the time in question? Please be specific in response. Petitioner must demonstrate that his health problems were such as to cause the payment of the maintenance fee to have been unavoidably delayed.

The application file does not indicate a change of address has been filed in this case, although the address given on the petition differs from the address of record. A change of address should be filed in this case. A courtesy copy of this decision is being mailed to the address noted on the petition. However, until otherwise instructed, all future correspondence regarding this patent will be mailed solely to the address of record.

If petitioner does not wish to pursue reinstatement of this expired patent, petitioner may request a refund of the $490 maintenance fee and the $1,640 surcharge fee submitted with the petition. The request should be made in writing and addressed to: Mail Stop 16, Director of the U.S. Patent and Trademark Office, P. O. Box 1450, Alexandria, VA 22313-1450. A copy of this decision should accompany petitioner's request.

Further correspondence with respect to this matter should be addressed as follows:

By mail:
Mail Stop PETITION
Commissioner for Patents
Post Office Box 1450
Alexandria, VA 22313-1450

By hand:
U.S. Patent and Trademark Office
Customer Service Window, Mail Stop Petition
Randolph Building
401 Dulany Street
Alexandria, VA 22314

By FAX: (571) 273-8300 – ATTN: Office of Petitions

Telephone inquiries concerning this decision should be directed to the undersigned at (571) 272-3230.

Shirene Willis Brantley

Shirene Willis Brantley
Senior Petitions Attorney
Office of Petitions

CC: NILS V. JOHNSON, JR.
P.O. BOX 625
BURGESS, VA 22432

SPE RESPONSE FOR CERTIFICATE OF CORRECTION

Paper No.: X

DATE : April 09, 2008

TO SPE OF : ART UNIT 2611

SUBJECT : Request for Certificate of Correction for Appl. No.: 10/410323 Patent No.: 7280611 B2

A response is requested with respect to a request for a certificate of correction.

With respect to the change(s) requested to correct Office and/or Applicant's errors, should the patent read as shown in the certificate of correction attached herewith or the COCIN document(s), in IFW images for the above-identified patented application? No new matter should be introduced, nor should the scope or meaning of the claims be changed.

If the response is for an IFW, within 7 days, please complete and forward the response, to the employee (named below) via scanning into application images, using document code **COCX**

DO NOT SENT TO ATTORNEY

If the response is for a paper file wrapper, please complete the response and forward the response with the paper file wrapper, to the employee (named below), within 7 days, to:

Certificates of Correction Branch (CofC)
South Tower - 9A22
Palm Location 7580

You can fax the Director's SPE response to 571-270-9990

LAMONTE NEWSOME
Certificates of Correction Branch
703-308-9390 ext. 112

Thank You For Your Assistance

The request for issuing the above-identified correction(s) is hereby:
Note your decision on the appropriate box.

☑ **Approved**	**All** changes apply.
☐ **Approved in Part**	Specify below which changes **do not** apply.
☐ **Denied**	State the reasons for denial below.

Comments: _____

M. E.
SPE

2611
Art Unit

U.S. DEPARTMENT OF COMMERCE Patent and Trademark Office

UNITED STATES PATENT AND TRADEMARK OFFICE

COMMISSIONER FOR PATENTS
UNITED STATES PATENT AND TRADEMARK OFFICE
P.O. BOX 1450
ALEXANDRIA, VA 22313-1450
www.uspto.gov

Paper No. 5

E I DU PONT DE NEMOURS AND COMPANY
LEGAL PATENT RECORDS CENTER
BARLEY MILL PLAZA 25/1128
4417 LANCASTER PIKE
WILMINGTON DE 19805

COPY MAILED

JAN 2 0 2004

OFFICE OF PETITIONS

In re Application of
Joris van Nunen et al.
Application No. 10/410,334
Filed: April 9, 2003
Attorney Docket No. FO6697 US NA

ON PETITION

This is a decision on the petition filed December 11, 2003, under 37 CFR 1.47(a)

The petition under 37 CFR 1.47(a) is **DISMISSED**.

Any request for reconsideration of this decision must be submitted within TWO (2) MONTHS from the mail date of this decision. Extensions of time (and fee) under 37 CFR 1.136(a) are permitted. The reconsideration request should include a cover letter entitled "Renewed Petition under 37 CFR 1.137(b) and 1.47(a)."

The above-identified application was filed April 9, 2003. Accordingly, on June 9, 2003, a "Notice To File Missing Parts Of Application" was mailed, requiring a signed oath or declaration and surcharge for its late filing.

In response, on December 11, 2003, petitioners submitted the present petition, authorization to charge the petition fee and surcharge, and a declaration naming Joris van Nunen, Alan D. Heaney, Chuck Xu, Deepti Pant and Louay Eldada and signed by joint inventors Eldada, Pant and Xu on behalf of themselves and joint inventors van Nunen and Heaney.

Petitioners assert that several attempts were made to reach inventors van Nunen and Heaney.

A grantable petition under 37 CFR 1.47(a) requires:

(1) proof that the non-signing inventor cannot be reached or located, notwithstanding diligent effort, or refuses to sign the oath or declaration after having been presented with the application papers (specification, claims and drawings);

(2) an acceptable oath or declaration in compliance with 35 U.S.C. §§ 115 and 116;

(3) the petition fee;

(4) a surcharge of $130 or $65 (small entity) if the petition and/or declaration is not filed at the time of filing the application, and

(5) a statement of the last known address of the non-signing inventor.

The petition lacks item (1).

Petitioners have only stated that "several attempts have been made" to reach joint inventors van Nunen and Heaney, petitioners must present a showing that diligent efforts have been made to locate, and provide a copy of the application to, the non-signing inventors.[1] At a minimum, petitioners should provide a copy of the cover letter transmitting the application papers (specification including claims, drawings, if any, and the Declaration) to the non-signing inventors or details given in an affidavit or declaration of facts by a person having first-hand knowledge of the details. If the application is returned as undeliverable, petitioners should submit a copy of the envelope showing that the application was mailed to the inventor(s) last known address but was returned as undeliverable by the post office.

Additionally, if an inventor(s) cannot be reached at his or her last known address, petitioners must provide details, in an affidavit or declaration of facts by a person with first hand knowledge of the details, of the efforts, such as Internet, e-mail, or telephone directory searches, which have been undertaken to locate that inventor, send or give a copy of the application papers to him or her, and request that he or she sign and return the declaration. If repeated attempts to contact an inventor(s) by telephone, mail, and e-mail, are unsuccessful, petitioners will have established that an inventor(s) cannot be found despite diligent efforts.

If an inventor refuses in writing to sign the declaration, petitioners should submit that written refusal with any renewed petition. If an inventor refuses orally, then the person to whom that oral refusal was made must provide details of the refusal in an affidavit or declaration of facts.

The petition fee, late-filing surcharge and extension of time fees have been charged to deposit account, No. 04-1928, as authorized in the petition filed December 11, 2003.

Further correspondence with respect to this matter should be addressed as follows:

By mail: Mail Stop Petition
Commissioner for Patents
P.O. Box 1450
Alexandria, VA 22313-1450

By FAX: (703) 872-9306

Telephone inquiries concerning this matter may be directed to the undersigned Petitions Attorney at (703) 305-4497.

Patricia Faison-Ball

Patricia Faison-Ball
Senior Petitions Attorney
Office of Petitions

---

[1] MPEP 409.03(d).

UNITED STATES PATENT AND TRADEMARK OFFICE

Commissioner for Patents
United States Patent and Trademark Office
P.O. Box 1450
Alexandria, VA 22313-1450
www.uspto.gov

Paper No. 8

E I DU PONT DE NEMOURS AND COMPANY
LEGAL PATENT RECORDS CENTER
BARLEY MILL PLAZA 25/1128
4417 LANCASTER PIKE
WILMINGTON DE 19805

COPY MAILED

APR 2 8 2004

OFFICE OF PETITIONS

In re Application of	:
Joris van Nunen et al.	:
Application No. 10/410,334	: DECISION REFUSING STATUS
Filed: April 9, 2003	: UNDER 37 CFR 1.47(a)
Attorney Docket No. FO6697 US NA	:

This decision is in response to the request for reconsideration filed March 19, 2004.

The request for reconsideration is **DISMISSED**.

Rule 47 applicant is given TWO MONTHS from the mailing date of this decision to respond, correcting the below-noted deficiencies. Any response should be entitled "Request for Reconsideration of Petition Under 37 CFR 1.47(a)" and may include an oath or declaration executed by the inventor. Failure to respond will result in abandonment of the application. Any extensions of time will be governed by 37 CFR 1.136(a).

The above-identified application was filed April 9, 2003. Accordingly, on June 9, 2003, a "Notice To File Missing Parts Of Application" was mailed, requiring a signed oath or declaration and surcharge for its late filing. In response, on December 11, 2003, petitioners submitted a petition under 37 CFR 1.47 (a), and a declaration naming Joris van Nunen, Alan D. Heaney, Chuck Xu, Deepti Pant and Louay Eldada and signed by joint inventors Eldada, Pant and Xu on behalf of themselves and joint inventors van Nunen and Heaney. The petition was dismissed in a decision mailed January 20, 2004. The petition indicated that several attempts had been made to reach inventors van Nunen and Heaney however, no proof to substantiate the claim was provided.

The supplemental information provided with the request for reconsideration consists of an envelope addressed to non-signing inventor van Nunen, returned by the postal service with an indication that no forwarding order is on file. Petitioner also provided eighteen pages from an internet search for non-signing inventor Alan D. Heaney. The search was for Heaney limited to Massachusetts and 74 matching listings were provided, none of which were positive listings for Alan D. Heaney.

Unfortunately, the efforts provided do not equate to diligent efforts as required by the regulations.

A grantable petition under 37 CFR 1.47(a) requires:

(1) proof that the non-signing inventor cannot be reached or located, notwithstanding diligent effort, or refuses to sign the oath or declaration after having been presented with the application papers (specification, claims and drawings);

(2) an acceptable oath or declaration in compliance with 35 U.S.C. §§ 115 and 116;

(3) the petition fee;

(4) a surcharge of $130 or $65 (small entity) if the petition and/or declaration is not filed at the time of filing the application, and

(5) a statement of the last known address of the non-signing inventor.

The petition still lacks item (1).

Since petitioner has a last known address, petitioner should at least attempt to locate the non-signing inventor at that address and provide proof of the efforts to do so. The telephone directory provided (18 pages in total) only indicates that there is no phone listing for Mr. Heaney. The present request for reconsideration nor the original request for status under 37 CFR 1.47(a) failed to show that attempts to locate Mr. Heaney at the Avon Street, Wakefield, Massachusetts address. Similar efforts as those used to locate Mr. Van Nunen could be employed for showing diligence with respect to Mr. Heaney.

Further correspondence with respect to this matter should be addressed as follows:

By mail: Mail Stop Petitions
Commissioner for Patents
P.O. Box 1450
Alexandria, VA 22313-1450

By FAX: (703) 872-9306
Attn: Office of Petitions

Telephone inquiries concerning this matter may be directed to the undersigned Petitions Attorney at (703) 305-4497.

Patricia Faison-Ball

Patricia Faison-Ball
Senior Petitions Attorney
Office of Petitions

UNITED STATES PATENT AND TRADEMARK OFFICE

Commissioner for Patents
United States Patent and Trademark Office
P.O. Box 1450
Alexandria, VA 22313-1450
www.uspto.gov

E I DU PONT DE NEMOURS AND COMPANY
LEGAL PATENT RECORDS CENTER
BARLEY MILL PLAZA 25/1128
4417 LANCASTER PIKE
WILMINGTON DE 19805

COPY MAILED
SEP 20 2006
OFFICE OF PETITIONS

In re Application of :
Joris Van Nunen et al. :
Application No. 10/410,334 : ON PETITION
Filed: April 9, 2003 :
Attorney Docket No. F06697USNA :

This is in response to the request for reconsideration filed October 27, 2005 under 37 CFR 1.47(a) and in response to the petition to revive, filed on even date, under 37 CFR 1.137(b).

The above-identified application was filed April 9, 2003. Accordingly, on June 9, 2003, a "Notice To File Missing Parts Of Application" was mailed, requiring a signed oath or declaration and surcharge for its late filing. In response, a petition under 37 CFR 1.47(a) was filed on December 11, 2003, which was dismissed in a decision mailed January 20, 2004. A request for reconsideration was filed March 19, 2004 and was also dismissed in a decision mailed April 28, 2004. The decision dismissing the request for reconsideration set a two month period for reply. No response having been filed and no extensions of time having been requested, this application became abandoned. Accordingly, a Notice of Abandonment was mailed June 10, 2005.

Comes now petitioner with a declaration signed by the previously non-signing inventors Nunen and Heaney, in compliance with 37 CFR 1.63. In view of the joinder of the inventors, further consideration under 37 CFR 1.47(a) is unnecessary.

The renewed petition filed October 27, 2005, noting joinder, is **DISMISSED** as involving moot issues.

This application does not have any rule 1.47(a) status and no such status should appear on the file wrapper. This application need not be returned to this office for any further consideration under 37 CFR 1.47(a).

In view of the above and as all requirements under 37 CFR 1.137 (b) have been satisfied, the petition to revive is **GRANTED**.

This application will be referred to the Office of Initial Patent Examination for further pre-examination processing.

Telephone inquiries related to this decision should be directed to the undersigned Petitions Attorney at (571) 272-3212.

Patricia Faison-Ball

Patricia Faison-Ball
Senior Petitions Attorney
Office of Petitions

SPE RESPONSE FOR CERTIFICATE OF CORRECTION

Paper No.: 20091104

DATE : 2/26/08

TO SPE OF : ART UNIT 2624

SUBJECT : Request for Certificate of Correction for Appl. No.: 10/410350 Patent No: 7146028 B2

A response is requested with respect to a request for a certificate of correction.

With respect to the change(s) requested to correct Office and/or Applicant's errors, should the patent read as shown in the certificate of correction attached herewith or the COCIN document(s), in IFW images for the above-identified patented application? No new matter should be introduced, nor should the scope or meaning of the claims be changed.

If the response is for an IFW, within 7 days, please complete and forward the response, to the employee (named below) via scanning into application images, using document code **COCX**.

If the response is for a paper file wrapper, please complete the response and forward the response with the paper file wrapper, to the employee (named below), within 7 days, to:

Certificates of Correction Branch (CofC)
South Tower - 9A22
Palm Location 7580

VIRGINIA TOLBERT
Certificates of Correction Branch
703-308-9390 ext. 113

Thank You For Your Assistance

The request for issuing the above-identified correction(s) is hereby:
Note your decision on the appropriate box.

- ☑ **Approved** — All changes apply.
- ☐ **Approved in Part** — Specify below which changes **do not** apply.
- ☐ **Denied** — State the reasons for denial below.

Comments: _____

BHAVESH M. MEHTA
SUPERVISORY PATENT EXAMINER
TECHNOLOGY CENTER 2600

SPE **Art Unit** 2624

UNITED STATES PATENT AND TRADEMARK OFFICE

COMMISSIONER FOR PATENTS
UNITED STATES PATENT AND TRADEMARK OFFICE
P.O. BOX 1450
ALEXANDRIA, VA 22313-1450
www.uspto.gov

COPY MAILED

DEC 15 2009

OFFICE OF PETITIONS

Goodwin Procter LLP
Attn: Patent Administrator
135 Commonwealth Drive
Menlo Park CA 94025-1105

In re Patent No. 7,544,482
Issued: June 9, 2009
Application No. 10/410,374
Filed: April 8, 2003
Dkt. No.: GNE-0290.028

: DECISION ON APPLICATION FOR
: TERM ADJUSTMENT and NOTICE OF
: INTENT TO ISSUE CERTIFICATE OF
: CORRECTION
:

This is a decision on the "REQUEST FOR RECONSIDERATION OF PATENT TERM ADJUSTMENT UNDER 37 C.F.R. § 1.705(b)," filed August 10, 2009. Patentee requests correction of the patent term adjustment from 201 days to 553 days. Patentee requests this correction on the basis that the Office took in excess of three years to issue the above-referenced patent. This matter is being treated under 37 CFR 1.705(d). Patentee further indicates that the reduction of 89 days in connection with the reply filed April 3, 2009 is in error and that the correct reduction is 90 days.

The application for patent term adjustment (PTA) under 37 CFR 1.705(d) is **GRANTED TO THE EXTENT INDICATED HEREIN**.

The above-identified application matured into U.S. Pat. No. 7,544,482 on June 9, 2009. The patent issued with a patent term adjustment of 201 days. The application for patent term adjustment was timely filed in accordance with 37 CFR 1.705(d). Patentee argues that in view of Wyeth v. Dudas, Civil Action No. 07-1492, 580 F. Supp. 2d 138, 88 U.S.P.Q. 2d 1538 (D.D.C. Sept. 30, 2008), the patent is entitled to an adjustment of 553 days (631 days pursuant to 35 USC 154(b)(1)(A) *plus* 506 days pursuant to 35 USC 154(b)(1)(B) *less* 153 days of appellate review *less* 431 days of applicant delay).

Patentee indicates that the correct reduction in connection with the reply filed April 3, 2009 is 90 days rather than 89 days, as reflected in the calculation of adjustment.

The Office thanks patentees for their good faith and candor in bringing this to our attention. A review of the record reveals that patentee is correct. In response to the non-final Office action mailed October 4, 2007, a reply was filed April 3, 2008, three months and 90 days later. Thus, in accordance with 37 CFR 1.704(b), the adjustment of patent term is subject to a 90 day reduction, the reduction having commenced January 5, 2008, the day after the date that is three months after the date that the non-final Office action was mailed, and ended April 3, 2009, the date that reply to the non-final Office action was filed.

Patentee further argues that the patent is entitled to an adjustment of 506 days pursuant to 35 USC 154(b)(1)(B). Patentee indicates that this period of adjustment is subject to a reduction of

153 days due to "Appellate Review starting with the Notice of Appeal filing on March 27, 2007 and ending with the Request for Continued Examination (RCE) filing on August 27, 2007."

As to patentee's contention that the application would be subject to reduction for appellate review, patentee is advised that even assuming arguendo that the application was entitled to adjustment pursuant to 37 CFR 1.702(b), the application was not subject to review by the Board of Patent Appeals and Interferences in accordance with 37 CFR 1.702(b)(4). Thus, reduction of patent term pursuant to 37 CFR 1.703(b)(4) would not be warranted.

As to patentee's argument that the patent is entitled to 506 days of adjustment pursuant to 37 CFR 1.702(b), patentee is advise that under 37 CFR 1.703(f), patentees are entitled to a period of patent term adjustment equal to the period of delays based on the grounds set forth in 37 CFR 1.702 reduced by the period of time equal to the period of time during which patentees failed to engage in reasonable efforts to conclude prosecution pursuant to 37 CFR 1.704. In other words, patentees are entitled to the period of Office delay reduced by the period of applicant delay.

The Office asserts that as of the filing of the request for continued examination (RCE) on August 27, 2007, the application was pending three years and 505 days after its filing date (April 9, 2006 to August 26, 2007). The Office agrees that as of the filing of the RCE, certain action was not taken within the specified time frame, and thus, the entry of a period of adjustment of 631 days is correct. At issue is whether patentees should accrue 505 days of patent term adjustment for the Office taking in excess of three years to issue the patent, as well as 631 days for Office failure to take a certain action within a specified time frame (or examination delay).

The Office contends that the period of 505 days of delay in issuing the patent overlaps with the 631 days of examination delay under 37 CFR 1.702(a)(1). Patentees' calculation of the period of overlap is inconsistent with the Office's interpretation of this provision. 35 U.S.C. 154(b)(2)(A) limits the adjustment of patent term, as follows:

35 U.S.C. 154(b)(2)(A) limits the adjustment of patent term, as follows:

> To the extent that the periods of delay attributable to grounds specified in paragraph (1) overlap, the period of any adjustment granted under this subsection shall not exceed the actual number of days the issuance of the patent was delayed.

As explained in *Explanation of 37 CFR 1.703(f)*[1] *and of the United States Patent and Trademark Office Interpretation of 35 U.S.C. 154(b)(2)(A)*, 69 Fed. Reg. 34283 (June 21, 2004), the Office interprets 35 U.S.C. 154(b)(2)(A) as permitting either patent term adjustment under 35 U.S.C. 154(b)(1)(A)(i)-(iv), or patent term adjustment under 35 U.S.C. 154(b)(1)(B), but not as

---

[1] Likewise, 37 CFR 1.703(f) provides that:

> To the extent that periods of delay attributable to the grounds specified in §1.702 overlap, the period of adjustment granted under this section shall not exceed the actual number of days the issuance of the patent was delayed.

permitting patent term adjustment under both 35 U.S.C. 154(b)(1)(A)(i)-(iv) and 154(b)(1)(B). Accordingly, the Office implements the overlap provision as follows:

> If an application is entitled to an adjustment under 35 U.S.C. 154(b)(1)(B), the entire period during which the application was pending (except for periods excluded under 35 U.S.C. 154(b)(1)(B)(i)-(iii)), and not just the period beginning three years after the actual filing date of the application, is the period of delay under 35 U.S.C. 154(b)(1)(B) in determining whether periods of delay overlap under 35 U.S.C. 154(b)(2)(A). Thus, any days of delay for Office issuance of the patent more than 3 years after the filing date of the application, which overlap with the days of patent term adjustment accorded prior to the issuance of the patent will not result in any additional patent term adjustment. See 35 U.S.C. 154(b)(1)(B), 35 U.S.C. 154(b)(2)(A), and 37 CFR § 1.703(f). See *Changes to Implement Patent Term Adjustment Under Twenty Year Term; Final Rule*, 65 Fed. Reg. 54366 (Sept. 18, 2000). See also *Revision of Patent Term Extension and Patent Term Adjustment Provisions; Final Rule*, 69 Fed. Reg. 21704 (April 22, 2004), 1282 Off. Gaz. Pat. Office 100 (May 18, 2004).

Further, as stated in the *Explanation of 37 CFR 1.703(f) and of the United States Patent and Trademark Office Interpretation of 35 U.S.C. 154(b)(2)(A)*, the Office has consistently taken the position that if an application is entitled to an adjustment under the three-year pendency provision of 35 U.S.C. 154(b)(1)(B), the entire period during which the application was pending before the Office (except for periods excluded under 35 U.S.C. 154(b)(1)(B)(i)-(iii)), and not just the period beginning three years after the actual filing date of the application, is the relevant period under 35 U.S.C. 154(b)(1)(B) in determining whether periods of delay "overlap" under 35 U.S.C. 154(b)(2)(A).

This interpretation is consistent with the statute. Taken together the statute and rule provide that to the extent that periods of delay attributable to grounds specified in 35 U.S.C. 154(b)(1) and in corresponding §1.702 overlap, the period of adjustment granted shall not exceed the actual number of days the issuance of the patent was delayed.

In this instance, the relevant period under 35 U.S.C. 154(b)(1)(B) in determining whether periods of delay "overlap" under 35 U.S.C. 154(b)(2)(A) is the period during which the application was pending before the Office beginning on the application filing date under 35 U.S.C. 111(a), April 8, 2003, and ending on August 26, 2007, the day before the date that the RCE was filed on August 27, 2007.

Pursuant to 35 U.S.C. 154(b)(1)(A) and 37 CFR 1.702(a)(1), 631 days of patent term adjustment were accorded during the pendency of the application for Office delay prior to the filing of the RCE. Pursuant to 35 U.S.C. 154(b)(1)(B) and 37 CFR 1.702(b), 505 days of patent term adjustment accrued at the time of submission of the RCE for Office issuance of the patent more than three years after the application filing date.

The 505 days of patent term adjustment under 37 CFR 1.702(b) overlaps with the 631 days of patent term adjustment under 37 CFR 1.702(a)(1). Entry of both the 505 days and the 631 days is

neither permitted nor warranted given that 631 days is the actual number of days issuance of the patent was delayed at the time of submission of the RCE.

In view thereof, at the time of issuance, having considered the 505 days of Office delay under the three-year pendency provision in conjunction with the 631 days of delay under 37 CFR 1.702(a)(1), subject to 431 days of reduction for applicant delay, the patent should have issued with an overall patent term adjustment of 200 days (adjustment of 631 days reduced 431 days for applicant delay).

Accordingly, this application file will be forwarded to the Certificate of Corrections branch for issuance of a certificate of correction to indicate that the term of this patent is extended or adjusted under 35 U.S.C. 154(b) by 200 days.

Any request for reconsideration of this decision must be submitted within ONE MONTH of the mail date indicated above. The time period for seeking reconsideration is not subject to extension pursuant to 37 CFR 1.136.

The required $200.00 patent term adjustment application fee has been charged Deposit Acct. No. 50-4634, as authorized.

Telephone inquiries specific to this matter should be directed to the undersigned at (571) 272-3205.

Alesia M. Brown
Petitions Attorney
Office of Petitions

CC: Draft Certificate of Correction

UNITED STATES PATENT AND TRADEMARK OFFICE

CERTIFICATE OF CORRECTION

PATENT	:	7,544,482 B2
DATED	:	June 9, 2009
INVENTOR(S)	:	Goodard, et al.

It is certified that error appears in the above-identified patent and that said Letters Patent is hereby corrected as shown below:

On the cover page,

[*] Notice: Subject to any disclaimer, the term of this patent is extended or adjusted under 35 USC 154(b) by 201 days

Delete the phrase "by 201 days" and insert – by 200 days--

UNITED STATES PATENT AND TRADEMARK OFFICE

Commissioner for Patents
United States Patent and Trademark Office
P.O. Box 1450
Alexandria, VA 22313-1450
www.uspto.gov

LAW OFFICE OF JOHN LIGON
505 HIGHLAND AVENUE
P.O. BOX 43485
UPPER MONTCLAIR NJ 07043

COPY MAILED

JUN 16 2005

OFFICE OF PETITIONS

ON PETITION

In re Application of	:	
Richard Van Nee	:	
Application No. 10/410,375	:	
Filed: April 9, 2003	:	
Attorney Docket No. VAN NEE 21	:	

This is a decision on the petition, filed June 13, 2005, under 37 CFR 1.313(c)(2) to withdraw the above-identified application from issue after payment of the issue fee.

The petition is **GRANTED.**

The above-identified application is withdrawn from issue for consideration of a submission under 37 CFR 1.114 (request for continued examination). See 37 CFR 1.313(c)(2).

Petitioner is advised that the issue fee paid on May 13, 2005 in the above-identified application cannot be refunded. If, however, the above-identified application is again allowed, petitioner may request that it be applied towards the issue fee required by the new Notice of Allowance.[1]

Telephone inquiries should be directed to the undersigned at (571) 272-3208.

The examiner of Technology Center AU 2661 will consider the request for continued examination under 37 CFR 1.114.

Karen Creasy

Karen Creasy
Petitions Examiner
Office of Petitions
Office of the Deputy Commissioner
for Patent Examination Policy

---

[1] The request to apply the issue fee to the new Notice may be satisfied by completing and returning the new Issue Fee Transmittal Form PTOL-85(b), which includes the following language thereon: "Commissioner for Patents is requested to apply the Issue Fee and Publication Fee (if any) or re-apply any previously paid issue fee to the application identified above." Petitioner is advised that, whether a fee is indicated as being due or not, the Issue Fee Transmittal Form **must** be completed and timely submitted to avoid abandonment. Note the language in bold text on the first page of the Notice of Allowance and Fee(s) Due (PTOL-85).

UNITED STATES PATENT AND TRADEMARK OFFICE

COMMISSIONER FOR PATENTS
UNITED STATES PATENT AND TRADEMARK OFFICE
P.O. BOX 1450
ALEXANDRIA, VA 22313-1450
www.uspto.gov

Date : June 16, 2005

TO : Director, Office of Patent Publication

FROM : Office of the Deputy Commissioner
for Patent Examination Policy

SUBJECT : Withdrawal from Issue of

Applicant(s) :Richard Van Nee
Application No. :10/410,375
Filed :April 9, 2003

The above-identified application has been assigned Patent No. 6,909,689 and an issue date of June 21, 2005.

It is hereby directed that this application be withdrawn from issue at the request of the applicant.

Do not refund the issue fee.

The following erratum should be published in the Official Gazette if the above-identified application is published in the OG of June 21, 2005:

"All reference to Patent No. 6,909,689 to Richard Van Nee of Netherlands for FREQUENCY DIVISION MULTIPLEXING SYSTEM WITH SELECTABLE RATE appearing in the Official Gazette of June 21, 2005 should be deleted since no patent was granted."

Karen Creasy

Karen Creasy
Petitions Examiner
Office of Petitions
Office of the Deputy Commissioner
for Patent Examination Policy

cc: Paul Harrison, MDW-4B03,(FAX-273-5468)
Deneise Boyd, MDE-3D39 (FAX-273-5124)
Mary Louise McAskill, ST-8C15 (FAX 305-4372)
Niomi Farmer, ST-8C14 (FAX-305-4372)
Mary E. Johnson (Cookie), MDE-7C71 (FAX 273-0038
Duane Davis P/OPC MDE-7D89
Tamara Greene, ST-8C13

UNITED STATES PATENT AND TRADEMARK OFFICE

Commissioner for Patents
United States Patent and Trademark Office
P.O. Box 1450
Alexandria, VA 22313-1450
www.uspto.gov

Paper No. 010504

Elliot Furman
Skymoon Ventures
3045 Park Blvd.
Palo Alto CA 94306

JAN 15 2004

In re Application of	:
James Joseph Blanc	: DECISION ON REQUEST TO
Application No. 10/410,380	: WITHDRAW FROM RECORD
Filed: April 9, 2003	:
Attorney Docket No. 031003-01	:

This is a decision on the request to withdraw as agent of record under 37 C.F.R. § 1.36, filed July 7, 2003.

A grantable request to withdraw as attorney of record should indicate thereon the present mailing addresses of the attorney(s) who is/are withdrawing from the record and of the applicant. The request for withdrawal must be signed by every attorney seeking to withdraw or contain a clear indication that one attorney is signing on behalf of another/others. A request to withdraw will not be approved unless at least 30 (thirty) days would remain between the date of approval and the later of the expiration date of a time to file a response or the expiration date of the maximum time period which can be extended under 37 C.F.R. § 1.136(a).

The request meets all the above listed requirements.

The request is APPROVED.

All future communications from the Office will be directed to the below-listed address until otherwise notified by applicant.

José G. Dees, Special Program Examiner
Technology Center 2800
Semiconductors, Electrical and Optical
Systems and Components

cc: Skymoon Ventures
3045 Park Blvd
Palo Alto, CA 94306

UNITED STATES PATENT AND TRADEMARK OFFICE

Commissioner for Patents
United States Patent and Trademark Office
P.O. Box 1450
Alexandria, VA 22313-1450
www.uspto.gov

Paper No. 101904

SKYMOON RESEARCH & DEVELOPMENT
3045 Park Blvd
Palo Alto CA 94306

DEC 29 2004

In re Application of:	:	
James J. Blanc	:	DECISION ON REQUEST TO WITHDRAW FROM RECORD
Serial No.: 10/410,380	:	
Filed: April 09, 2003	:	
Attorney Docket No.: **PED/07/01/UTL**	:	

This is a decision on the request to withdraw as attorney of record under 37 C.F.R. § 1.36, filed July 07, 2003.

The request is **DISMISSED** as moot.

A review of the application file record reveals a proper revocation and power of attorney to the attorneys of Skymoon Research & Development was filed on January 21, 2004. As such, the power of attorney for the attorneys and agents requesting withdrawal has already been revoked. Accordingly, the present request is moot, and must be dismissed.

All future communications form the Office will continue to be directed to the above-listed address until otherwise notified by applicant.

Inquiries related to this decision should be directed to Edward P. Westin at (571) 272-1638.

Edward Westin

Edward P. Westin, Special Programs Examiner
Technology Center 2800
Semiconductors, Electrical and Optical
Systems and Components

UNITED STATES PATENT AND TRADEMARK OFFICE

COMMISSIONER FOR PATENTS
UNITED STATES PATENT AND TRADEMARK OFFICE
P.O. BOX 1450
ALEXANDRIA, VA 22313-1450
www.uspto.gov

MAIL

JUN 2 0 2005

DIRECTOR OFFICE
TECHNOLOGY CENTER 2100

Mark D. Miller
Kimble, MacMichael & Upton
5260 North Palm Avenue
Suite 221
Fresno, CA 93704

In re Application of: Alexanian, et al. Application No. 10/410,417 Filed: April 8, 2003 For: MAGNETICALLY PROGRAMMABLE REMOTE SWITCH CONTROLLER	**DECISION ON PETITION TO MAKE SPECIAL UNDER M.P.E.P.§708.02(V) & (VI): ENVIRONMENTAL QUALITY & ENERGY**

This is a decision on the petition, filed April 8, 2003, under 37 C.F.R. § 1.102(c) and M.P.E.P. §708.02(V) & (VI): Environmental Quality & Energy, to make the above-identified application special.

The petition is **DISMISSED**.

A grantable petition to make an application special under 37 C.F.R. § 1.102 and in accordance with M.P.E.P. § 708.02, Section V, for an invention which materially enhances the quality of the environment of mankind by contributing to the restoration or maintenance of the basic life-sustaining elements, i.e. air, water and soil, must be accompanied by affidavits or declarations under 37 C.F.R. § 1.102 by the applicant or his/her attorney or agent explaining how the invention contributes to the maintenance or restoration of one of these life sustaining elements. No fee is required for such a petition.

A grantable petition under 37 C.F.R. § 1.102(c), M.P.E.P. § 708.02, Section VI, must be accompanied by the showing that the application is for an invention which materially contributes to (A) the discovery or development of energy resources, or (B) the more efficient utilization and conservation of energy resources. Examples of inventions in category (A) would be developments in fossil fuels (natural gas, coal, and petroleum), hydrogen fuel technologies, nuclear energy, solar energy, etc. Category (B) would include inventions relating to the reduction of energy consumption in combustion systems, industrial equipments, household appliances, etc. A petition under M.P.E.P. § 708.02, Section VI, should be accompanied by verified statements under 37 C.F.R. § 1.102 by the applicant or assignee or statements by an attorney/agent registered to practice before the Patent and Trademark Office explaining how the invention materially contributes to category (A) or (B).

Applicant presents two grounds to make the application special: environmental quality will be enhanced; and energy savings will result. In support of the request, applicant provides a statement and declaration, by one of the applicants in support of the petition to make special, on how the claimed invention would meet these two goals.

The petition, accompanied by a declaration by George Alexanian, one on the inventors, describes that the subject patent application is directed to self-contained battery-operated controls for activating or deactivating switches in remote locations. As stated, the most common use of the invention is anticipated to be operation and control of remotely-located irrigation valves where there is no available AC or DC power. The controls of the subject patent application are deemed to conserve energy and prolong the useful life of the batteries which power them. The executing inventor states that he is the assignee of all rights.

M.P.E.P. §301, §342 and 37 CFR §3.73(b) are set forth in part below:

> An assignment can be made of record in the file of a patent application, patent, or other patent proceeding (e.g., reexamination proceeding). This step is necessary to permit the assignee to "take action " in the application, patent, or other patent proceeding under the conditions set forth in 37 CFR 3.73 and MPEP § 324. Recordation of an assignment in the assignment records of the Office does not, by itself, permit the assignee to take action in the application, patent, or other patent proceeding.
>
> If there is a single assignee of the entire right, title and interest in the patent application, 37 CFR 3.71(b)(1) provides that the single assignee (i.e., individual assignee) may act alone to conduct the prosecution of an application or other patent proceeding (upon complying with 37 CFR 3.73(b)).
>
> The establishment of ownership by the assignee must be submitted prior to, or at the same time as, the paper requesting or taking action is submitted. 37 CFR 3.73(c). **If the submission establishing ownership is not present, the action sought to be taken will not be given effect** [emphasis added]. If the submission establishing ownership is submitted at a later date, that date will be the date of the request for action or the date of the assignee's action taken. Form PTO/SB/96 may be used to establish ownership under 37 CFR 3.73(b).
>
> Note, a newly executed "Certificate under 37 CFR §3.73(b)" ***must be*** filed when a continuation-in-part application is filed by an assignee. Notice of April 30, 1993, 1150 O.G. 62-64.
>
> § 3.73 Establishing right of assignee to take action.
> (b)(1) In order to request or take action in a patent or trademark matter, the assignee must establish its ownership of the patent or trademark property of paragraph (a) of this section to the satisfaction of the Director. The establishment of ownership by the assignee may be combined with the paper that requests or takes the action. Ownership is established by submitting to the Office a signed statement identifying the assignee, accompanied by either:
> (i) Documentary evidence of a chain of title from the original owner to the assignee (e.g., copy of an executed assignment). The documents submitted to establish ownership may be required to be recorded pursuant to § 3.11 in the assignment records of the Office as a condition to permitting the assignee to take action in a matter pending before the Office; or
> (ii) A statement specifying where documentary evidence of a chain of title from the original owner to the assignee is recorded in the assignment records of the Office (e.g., reel and frame number).
> (2) The submission establishing ownership must show that the person signing the submission is a person authorized to act on behalf of the assignee by:
> (i) Including a statement that the person signing the submission is authorized to act on behalf of the assignee; or

> (ii) Being signed by a person having apparent authority to sign on behalf of the assignee, e.g., an officer of the assignee.
> (c) For patent matters only:
> (1) Establishment of ownership by the assignee must be submitted prior to, or at the same time as, the paper requesting or taking action is submitted.
> (2) If the submission under this section is by an assignee of less than the entire right, title and interest, such assignee must indicate the extent (by percentage) of its ownership interest, or the Office may refuse to accept the submission as an establishment of ownership.

The Declaration filed with the petition of April 8, 2003 was not properly executed, as identified above, since a statement under 37 CFR 3.73(b) is not present in the instant application. To be properly executed, the affidavit or declaration may be signed by [all of] the inventor(s), the attorney or agent of record, or assignee(s) of the entire interest.

With respect to 37 C.F.R. § 1.102(c) and M.P.E.P. § 708.02, Section V, in the statement submitted, Petitioner has failed to explain how the invention contributes to the maintenance or restoration of one of the life sustaining elements, i.e. air, water and soil. Petitioner merely concludes "The controls provide for efficient and non-wasteful use of water" and that the controls serve to "conserve natural resources by conserving water", without further explanation.

With respect to 37 C.F.R. § 1.102(c) and M.P.E.P. § 708.02, Section VI, contrary to Applicant's remarks found on page 2 of the Statement/Declaration filed with the petition on April 8, 2003, the "copy of a remittance invoice from the Department of Energy regarding .... to save energy in the area of irrigation valve controllers (contract #EE15698)", has not reached the file for review.

As such, petitioner has failed to establish a sufficient nexus between the disclosed and claimed invention and that environmental quality will be enhanced or that energy savings will result.

In accordance with the petition as directed to M.P.E.P. § 708.02, Section V, the petition is **DISMISSED**.

In accordance with the petition, as directed to M.P.E.P. § 708.02, Section VI, the petition is **DISMISSED**.

Petitioner is given one opportunity to perfect the petition. Any request for reconsideration must be filed within TWO MONTHS of the mail date of this decision. Extensions of time under 37 CFR 1.136(a) are permitted by a declaration or statement providing the information as outlined above.

Until the renewed petition is submitted, the application will be returned to the examiner's docket to await treatment on the merits in the normal order of examination.

Brian L. Johnson 6/14/05
Special Programs Examiner
Technology Center 2100
Computer Architecture, Software, and Information Security
(571) 272-3595

FILE COPY

UNITED STATES PATENT AND TRADEMARK OFFICE

UNITED STATES DEPARTMENT OF COMMERCE
United States Patent and Trademark Office
Address: COMMISSIONER OF PATENTS AND TRADEMARKS
P.O. Box 1450
Alexandria, Virginia 22313-1450
www.uspto.gov

#4

APPLICATION NUMBER	FILING DATE	GRP ART UNIT	FIL FEE REC'D	ATTY.DOCKET.NO	DRAWINGS	TOT CLAIMS	IND CLAIMS
10/410,470	04/09/2003	3672	1920	05516.061003	15	85	3

CONFIRMATION NO. 3832

FILING RECEIPT

OC000000010448203

Richard A. Fagin
ROSENTHAL & OSHA L.L.P.
Suite 4550
700 Louisiana
Houston, TX 77002

Date Mailed: 07/08/2003

Receipt is acknowledged of this regular Patent Application. It will be considered in its order and you will be notified as to the results of the examination. Be sure to provide the U.S. APPLICATION NUMBER, FILING DATE, NAME OF APPLICANT, and TITLE OF INVENTION when inquiring about this application. Fees transmitted by check or draft are subject to collection. Please verify the accuracy of the data presented on this receipt. **If an error is noted on this Filing Receipt, please write to the Office of Initial Patent Examination's Filing Receipt Corrections, facsimile number 703-746-9195. Please provide a copy of this Filing Receipt with the changes noted thereon. If you received a "Notice to File Missing Parts" for this application, please submit any corrections to this Filing Receipt with your reply to the Notice. When the USPTO processes the reply to the Notice, the USPTO will generate another Filing Receipt incorporating the requested corrections (if appropriate).**

RECEIVED
AUG 2 0 2003
GROUP 3600

Applicant(s)

Amardeep Singh, Houston, TX;
Ying Xiang, The Woodlands, TX;
Sujian Huang, The Woodlands, TX;

Domestic Priority data as claimed by applicant

This application is a CON of 09/590,577 06/08/2000

Foreign Applications

If Required, Foreign Filing License Granted: 07/08/2003

Projected Publication Date: 10/16/2003

Non-Publication Request: No

Early Publication Request: No

Title

Cutting structure for roller cone drill bits

Preliminary Class

175

LICENSE FOR FOREIGN FILING UNDER
Title 35, United States Code, Section 184
Title 37, Code of Federal Regulations, 5.11 & 5.15

GRANTED

The applicant has been granted a license under 35 U.S.C. 184, if the phrase "IF REQUIRED, FOREIGN FILING LICENSE GRANTED" followed by a date appears on this form. Such licenses are issued in all applications where the conditions for issuance of a license have been met, regardless of whether or not a license may be required as set forth in 37 CFR 5.15. The scope and limitations of this license are set forth in 37 CFR 5.15(a) unless an earlier license has been issued under 37 CFR 5.15(b). The license is subject to revocation upon written notification. The date indicated is the effective date of the license, unless an earlier license of similar scope has been granted under 37 CFR 5.13 or 5.14.

This license is to be retained by the licensee and may be used at any time on or after the effective date thereof unless it is revoked. This license is automatically transferred to any related applications(s) filed under 37 CFR 1.53(d). This license is not retroactive.

The grant of a license does not in any way lessen the responsibility of a licensee for the security of the subject matter as imposed by any Government contract or the provisions of existing laws relating to espionage and the national security or the export of technical data. Licensees should apprise themselves of current regulations especially with respect to certain countries, of other agencies, particularly the Office of Defense Trade Controls, Department of State (with respect to Arms, Munitions and Implements of War (22 CFR 121-128)); the Office of Export Administration, Department of Commerce (15 CFR 370.10 (j)); the Office of Foreign Assets Control, Department of Treasury (31 CFR Parts 500+) and the Department of Energy.

NOT GRANTED

No license under 35 U.S.C. 184 has been granted at this time, if the phrase "IF REQUIRED, FOREIGN FILING LICENSE GRANTED" DOES NOT appear on this form. Applicant may still petition for a license under 37 CFR 5.12, if a license is desired before the expiration of 6 months from the filing date of the application. If 6 months has lapsed from the filing date of this application and the licensee has not received any indication of a secrecy order under 35 U.S.C. 181, the licensee may foreign file the application pursuant to 37 CFR 5.15(b).

UNITED STATES PATENT AND TRADEMARK OFFICE

COMMISSIONER FOR PATENTS
UNITED STATES PATENT AND TRADEMARK OFFICE
P.O. BOX 1450
ALEXANDRIA, VA 22313-1450
www.uspto.gov

SILVERBROOK RESEARCH PTY. LTD.
393 DARLING STREET
BALMAIN NSW 2-041
AUSTRALIA

COPY MAILED
MAR 30 2006
OFFICE OF PETITIONS

In re Application of	:	
Paul Lapstun	:	
Application No. 10/410,484	:	ON PETITION
Filed: April 9, 2003	:	
Attorney Docket No. NPT023US	:	

This is a decision on the petition under 37 CFR 1.137(b), filed February 27, 2006, to revive the above-identified application.

The application became abandoned for failure to timely respond to the final Office action mailed June 2, 2005. A Notice of Abandonment was mailed on February 3, 2006.

The petition satisfies the requirements of 37 CFR 1.137(b) in that petitioner has supplied (1) the reply in the form of a Request for Continued Examination (RCE) under 37 CFR 1.114, with the $790 filing fee; (2) the petition fee of $1,500; and (3) an adequate statement of unintentional delay. Therefore, the petition is **GRANTED**.

The Office acknowledges receipt of an Amendment/Specification filed February 27, 2006.

This application is being revived for consideration of the RCE.

The application file is being referred to Technology Center Art Unit 2876.

Telephone inquiries concerning this decision should be directed to the undersigned at (571) 272-3226.

Andrea Smith
Petitions Examiner
Office of Petitions

UNITED STATES PATENT AND TRADEMARK OFFICE

Commissioner for Patents
United States Patent and Trademark Office
P.O. Box 1450
Alexandria, VA 22313-1450
www.uspto.gov

CHARLES E. BAXLEY, ESQUIRE
Fifth Floor
59 John Street
New York NY 10038

COPY MAILED

SEP 21 2007

OFFICE OF PETITIONS

In re Application of
Engel et al.
Application No. 10/410,488
Filed: April 9, 2003
Attorney Docket Number: 13632 B

ON PETITION

This is a decision on the petition under 37 CFR 1.137(b), filed October 26, 2006, to revive the above-identified application.

This above-identified application became abandoned for failure to timely file a reply to the non-final Office Action of January 24, 2006. The non-final Office Action set a three (3) month shortened statutory period for reply. No extensions of time were obtained under the provisions of 37 CFR §1.136(a). Accordingly, this application became abandoned on April 25, 2006. A Notice of Abandonment was mailed on August 15, 2006.

This petition is hereby **Granted**.

The office hereby acknowledges the receipt of the amendment and drawings submitted with the instant petition.

The address given on the petition differs from the address of record. If appropriate, a change of address should be filed in accordance with MPEP 601.03. A courtesy copy of this decision is being mailed to the address given on the petition. However, the Office will mail all future correspondence solely to the address of record.

This application is being referred to Art Unit 2182 for further processing.

Telephone inquiries concerning this matter should be directed to the undersigned at (571) 272-3215.

Charlema R. Grant

Charlema R. Grant
Petitions Attorney
Office of Petitions

cc: Charles E. Baxley
90 John Street, Suite 309
New York, NY 10038

UNITED STATES PATENT AND TRADEMARK OFFICE

Commissioner for Patents
United States Patent and Trademark Office
P.O. Box 1450
Alexandria, VA 22313-1450
www.uspto.gov

Paper No. 10

HAROLD R. BROWN III
BURNS DOANE SWECKER & MATHIS
P O BOX 1404
ALEXANDRIA, VA 22313-1404

COPY MAILED

MAY 2 6 2004

OFFICE OF PETITIONS

In re Application of
Roger C. Cottrell et al
Application No. 10/410,490
Filed: April 9, 2003
Attorney Docket No. A33582-PCT-USA-A-070337.0

ON PETITION

This is a decision on the petition under 37 CFR 1.55(c), filed October 1, 2003, requesting acceptance of an unintentionally delayed claim under 35 U.S.C. § 119 (a) - (d) for benefit of priority to PCT Application No. PCT/US00/27877, filed October 10, 2000. This is also being treated as a petition under 37 CFR 1.183 requesting wavier of 37 CFR 1.55(c) "as that rule operates in conjunction with 37 C.F.R.§ 1.17(t)."

The petition under 37 CFR 1.55(c) is **granted**.

The petition under 37 CFR 1.183 is **dismissed**.

PETITION UNDER 37 CFR 1.55(c)

A petition under 37 CFR 1.55(c) to accept an unintentionally delayed claim for priority requires:

(1) The nonprovisional application claiming the benefit of an earlier filing date must be filed on or after November 29, 2000;

(2) the claim submitted with the petition must identify the prior foreign application for which priority is claimed, as well as any foreign application for the same subject matter and having a filing date before that of the application for which priority is claimed, by the application number, country, and the filing date;

(3) the surcharge of $1,330.00, as set forth in 37 CFR 1.17(t);

(4) a statement that the entire delay between the date the claim was due under 37 CFR 1.55(a)(1) and the date the claim was filed was unintentional. (The

Commissioner may require additional information where there is a question whether the delay was unintentional.); and

(5) the above-identified nonprovisional application must be filed within 12 months of the filing date of the foreign application.

All the above requirements have been met. However, while the statement of unintentional delay does not comply with the rule, the statement presented will be construed as meaning that "the entire delay between the date the claim was due under 37 CFR 1.55(a)(1) and the date the claim was filed was unintentional." Petitioner must notify the Office if this is **not** a correct interpretation of the statement contained in the instant petition.

PETITION UNDER 37 CFR 1.183

Petitioner requests under 37 CFR 1.183 waiver of the applicable surcharge required under 37 CFR 1.55(c)(2) for the acceptance of an unintentionally delayed claim for priority under 35 U.S.C. § 119(a) - (d) as set forth in 37 C.F.R. § 1.17(t). In this regard, petitioner states that this is an extraordinary situation where waiver of the applicable fee is justified since "when the present application was filed, the parent and priority application information was included, but was erroneously expressed. The error in expressing the priority information should not, however, delay publication of the application -- which is understood to be the purpose of the time limitation set forth in 37 C.F.R. § 1.55(a)."

37 CFR 1.183 states that:

> In an extraordinary situation, when justice requires, any requirement of the regulations in this part which is not a requirement of the statutes may be suspended or waived by the Commissioner or the Commissioner's designee, sua sponte, or on petition of the interested party, subject to such other requirements as may be imposed. Any petition under this section must be accompanied by the petition fee set forth in § 1.17(h).

In order to grant any petition under 37 CFR 1.183, petitioner must show (1) that this is an extraordinary situation where (2) justice requires waiver of the rule. In re Sivertz, 227 U.S.P.Q. 255, 256 (Comm'r Pat. 1985). Petitioner has not shown that either condition exists in this case.

The circumstances of this case do not demonstrate an extraordinary situation, much less one where justice requires waiver of the rules. The failure to timely submit the claim for priority of the earlier application within the time period set forth in 37 CFR 1.55(a)(1)(i) was a circumstance entirely within petitioner's control, and could have been avoided by the exercise of reasonable care and diligence. Equitable powers should not be invoked to excuse the

performance of a condition by a party that has not acted with reasonable, due care and diligence. U.S. v. Lockheed Petroleum Services, 709 F.2d 1472, 1475 (Fed. Cir. 1983). Furthermore, since the USPTO did not cause or contribute to petitioner's filing delay, this case is even further removed from consideration as one where "justice requires" equitable relief. See Helfgott & Karras, P.C. v. Dickinson, 209 F.3d 1328, 54 USPQ2d 1425 (Fed. Cir. 2000).

MPEP 201.13 states:

> A priority claim can be made on filing: (A) by including a copy of an unexecuted or executed oath or declaration specifying a foreign priority claim (see 37 CFR 1.63(c)(2)); or (B) by submitting an application data sheet specifying a foreign priority claim (see 37 CFR 1.76).

A review of the file indicates that petitioner did not provide either an unexecuted or executed declaration or an application data sheet with the instant application. Therefore, petitioner is failure to comply with the requirements of the rules or procedures before the USPTO is not deemed to be an extraordinary situation that would warrant waiver of the rules or procedures under 37 CFR 1.183. See Honigsbaum v. Lehman, 903 F. Supp. 8, 37 USPQ2d 1799 (D.D.C. 1995).

Petitioner overlooks that his failure to timely claim the benefit of the earlier filed application under 35 U.S.C. § 1.119 (a) - (d) constituted a *waiver* of his right to claim such benefit of priority. See 35 U.S.C. § 1.119 (b)(2) ("the Director may consider the failure of the applicant to file a timely claim for priority as a waiver of any such claim. The Director may establish procedures, including the payment of a surcharge, to accept an unintentionally delayed claim under this section"); 37 U.S.C. § 1.119 (b)(2). Since petitioner desires to be entitled to the potential benefits of the earlier application via § 1.119 (a) - (d), then petitioner must also accept the consequences attendant to that action. See Abbott Laboratories V. Novopharm Ltd., 38 USPQ2d 1309, 1312 (D.C. N.II. 1996), *aff'd* 104 F.3d 1305, 41 USPQ2d 1535 (Fed. Cir. 1997).

A Filing Receipt, which reflects the claim for priority under 35 U.S.C. § 1.119 (a) - (d) to Application No. PCT/US00/27877, accompanies this decision on petition.

Acknowledgment is made of receipt on April 14, 2004 of Priority Document No. PCT/US00/27877.

As authorized, the $130.00 fee for the petition under 37 CFR 1.183 will be charged to petitioner's Deposit Account No. 02-4800.

This application is being forwarded to the Office of Initial Patent Examination for preexamination processing.

Any inquiries directly pertaining to this matter may be directed to Wan Laymon at (703) 306-5685.

Frances Hicks

Frances Hicks
Lead Petitions Examiner
Office of Petitions
Office of the Deputy Commissioner
for Patent Examination Policy

UNITED STATES PATENT AND TRADEMARK OFFICE

Commissioner for Patents
United States Patent and Trademark Office
P.O. Box 1450
Alexandria, VA 22313-1450
www.uspto.gov

Patent No. : 7,144,123
Ser. No. : 10/410,495
Inventor(s) : Lungren et al.
Issued : Dec. 5, 2006
Title : SPACE OPTICS COVER AND EXTENDABLE BAFFLE FOR CONTAMINATION CONTROL

Docket No. : 1050.701

Re: Request for Certificate of Correction

Consideration has been given your request for the issuance of a certificate of correction for the above-identified patent under the provisions of Rule(s) 1.322 and/or 1.323.

Assignees' names and addresses (assignment data) printed in a patent, are based *solely* on information supplied in the appropriate space for identifying the assignment data, i.e., item 3 of the Issue Fee Transmittal Form PTOL-85B. Granting of a request under 37 CFR 3.81(b) is required to correct applicant's error providing ***incorrect or erroneous*** assignment data, *before* issuance of a Certificate of Correction, under 37 CFR 1.323 *(see Manual of Patent Examining Procedures (M.P.E.P) Chp.1400, sect. 1481).* This procedure is required *at any time after the issue fee is paid*, including after issuance of the patent.

In view of the foregoing, your request, in this mater, is hereby denied.

A request to correct the Assignee under 37 CFR 3.81(b) should include:

A. **the processing fee set forth in 37 CFR 1.117(h) (currently $130);**
B. a statement that the failure to include the correct assignee name on the PTOL-85B was inadvertent; and
C. a copy of the Notice of Recordation of Assignment Document, reflecting the reel and frame number where the assignment(s) is recorded and/or reflecting proof of *the date* the assignment was submitted for recordation.

In the Request, Applicant(s) may request that the file be forwarded to Certificates of Correction Branch, for issuance of a Certificate of Correction, if the Request is granted.

Any request under 37 CFR 3.81(b) should be directed to the following address or facsimile number:

By mail: Mail Stop PETITIONS
Commissioner for Patents
Post Office Box 1450
Alexandria, VA 22313-1450

By hand: Customer Service Window
Mail Stop Petitions
Randolph Building
401 Dulany Street
Alexandria, VA 22314

By fax: (571) 273-0025
ATTN: Office of Petitions

If a fee (currently $100) was previously submitted for consideration of a Request for Certificate of Correction, under CFR 1.323, to correct assignment data, , no additional fee is required.

Ennis Young
For Mary Diggs
Decisions & Certificates
of Correction Branch
(703) 308-9390 ext. 117 or (703) 308-8309

UNITED STATES PATENT AND TRADEMARK OFFICE

Commissioner for Patents
United States Patent and Trademark Office
P.O. Box 1450
Alexandria, VA 22313-1450
www.uspto.gov

INTELLECTUAL PROPERTY MANAGEMENT
BOEING MANAGEMENT COMPANY
P.O. BOX 2515
MAIL CODE 110-SD54
SEAL BEACH CA 90740-1515

COPY MAILED

MAR 19 2009

OFFICE OF PETITIONS

In re Patent No. 7,144,123	:	
Issue Date: October 5, 2006	:	
Application No. 10/410,495	:	ON PETITION
Filed: April 9, 2003	:	
Attorney Docket No. 1050.701	:	

This is a decision on the petition filed December 11, 2008, which is being treated as a request under 37 CFR 3.81(b)[1] to amend the name of an assignee on the front page of the above-identified patent by way of a Certificate of Correction.

The request is **GRANTED**.

Telephone inquiries concerning this decision may be directed to Carl Friedman at (571) 272-6842. Inquiries regarding the issuance of a certificate of correction should be directed to the Certificate of Correction Branch at (571) 272-4200.

The Certificates of Correction Branch will be notified of this decision granting the petition under 37 CFR 3.81(b) and directing issuance of the requested Certificate of Correction.

Carl Friedman
Petitions Examiner
Office of Petitions

[1] *See* MPEP 1309, subsection II; and Official Gazette of June 22, 2004.

UNITED STATES PATENT AND TRADEMARK OFFICE

Commissioner for Patents
United States Patent and Trademark Office
P.O. Box 1450
Alexandria, VA 22313-1450
www.uspto.gov

MAILED
FROM DIRECTORS OFFICE

NOV 29 2005

TECHNOLOGY CENTER 3600

Johannes Schneebberger
384 Panoramic HWY.
Mill Valley, California
94941

In re Application of	:	
John D. Davis	:	DECISION ON PETITION
Application No. 10/410,505	:	UNDER 37 CFR §1.181
Filed: April 8, 2003	:	
For: BUCKLING OPPOSING SUPPORT FOR I-JOIST		

This is a decision on applicant's Petition Under 37 CFR 1.181(a) and MPEP 706.07(c) for Withdrawal of Finality of the Office Action which was filed September 29, 2005.

The petition is **DENIED**.

A non-final action was mailed March 1, 2005. This action contained a rejection of claims 1,2, and 19 and indicated that claims 10-18 were drawn to allowable subject matter. Applicant filed an amendment on April 25, 2005. In response to this amendment, the examiner mailed a Final Rejection on July 29, 2005.

Applicant argues that the finality of the July 29, 2005 was not appropriate since the examiner rejected the claims on a newly applied reference. Applicant points out that while the claims were amended the amendment merely combined the indicated allowable subject matter of claims 10-18 with original claim 1 from which they depended and thus there were no new issues to justify the finality of the Office action.

A review of the file shows that the amendment filed prior to the Final Office action does amend claim 1 substantially. In the previous Office action the examiner indicated claims 10-18 were drawn to allowable subject matter. Claims 11-18 depended directly or indirectly on claim 1. This suggests that the only amendment that would not possibly raise new issues would be a total incorporation of claim 10 into claim 1. Applicant did not do this, a large portion of claim 10 was not incorporated into claim 1. Therefore the issues are not as simple as applicant indicates and the examiner was required to consider amended claim 1 with a combination of limitations not previously examined. Thus, the new rejection of claim 1 on a reference not used in the previous Office action met the requirements for a proper Final Rejection.

The comments made by the examiner in an interview with applicant's attorney on August, 16, 2005 do not constitute an Office action and thus reference to possible rejections that she thinks could have been made are not, in fact, rejections of record and require no corrective action by petition.

For the reasons presented above the petition is **DENIED,** to the extent indicated above.

The application remains under final rejection.

John J Love

John J. Love
Patent Technology Center 3600
Telephone No.: (571) 272-5250
CF 11/15/05

UNITED STATES PATENT AND TRADEMARK OFFICE

Commissioner for Patents
United States Patent and Trademark Office
P.O. Box 1450
Alexandria, VA 22313-1450
www.uspto.gov

JOHANNES SCHNEEBERGER
118B MENDOCINO ST.
BRISBANE CA 94005

COPY MAILED

AUG 01 2007

OFFICE OF PETITIONS

In re Application of
John D. Davis
Application No. 10/410,505
Filed: April 8, 2003
Attorney Docket No.: MMC-101

ON PETITION

This is a decision on the petition filed November 27, 2006 to withdraw the holding of abandonment, under 37 CFR 1.181.

The petition under 37 CFR 1.181 is **DISMISSED**.

Any request for reconsideration of this decision must be submitted within **TWO (2) MONTHS** from the mail date of this decision. Extensions of time under 37 CFR 1.136(a) are permitted. The reconsideration request should include a cover letter entitled "Renewed Petition under 37 CFR 1.181," or, as explained in more detail below, "...under 37 CFR 1.137(a)" or (b). This is not a final agency decision.

Petitioner argues that a response to the Notice of Allowability mailed July 11, 2006 was filed October 3, 2006, that a Supplemental Notice of Allowability dated August 4, 2006 was not mailed to petitioner, that in view of typographic errors in the Supplemental Notice of Allowability dated September 15, 2006, it was the responsibility of the USPTO to withdraw the application from issue. In view of the above, petitioner believes that the holding of abandonment mailed November 15, 2006 was mailed in error and should be withdrawn.

A review of the file reveals that a Notice of Allowance and Issue Fee Due as well as a Notice of Allowability was mailed on July 11, 2006. Subsequent to the July 11, 2006 mailing, a Supplemental Notice of Allowability was mailed September 15, 2006. Apparently, petitioners must have been under the belief that in view of perceived errors in the Supplemental Notice of Allowability, that no response to the Notice of Allowance was due until such time as a corrected Supplemental Notice of Allowability was mailed and thus did not pay the issue fee due by October 11, 2006.

Petitioners are advised that if an Office communication is mailed and that in the absence of that communication being withdrawn by the USPTO, then by law a response is required within the time period set out in the Office communication received. The failure to file a

response causes the application to become abandoned, even if that communication was sent in error or petitioners believed there to be an error.

This application properly became abandoned October 12, 2006 for failure to timely pay the Issue Fee prior to the expiration of the period for response and therefore the Notice of Abandonment mailed November 15, 2006 was appropriate.

In view thereof, the holding of abandonment will not be withdrawn.

ALTERNATIVE VENUES

Petitioner may wish to consider filing a renewed petition under 37 CFR 1.137(a)[1] or 37 CFR 1.137(b),[2] which now provides that where the delay in reply was unintentional, a petition may be filed to revive an abandoned application or a lapsed patent pursuant to 37 CFR 1.137(b).

---

[1]A grantable petition under 37 CFR 1.137(a) must be accompanied by:

(1) the required reply, unless previously filed; In a nonprovisional application abandoned for failure to prosecute, the required reply may be met by the filing of a continuing application. In a nonprovisional utility or plant application filed on or after June 8, 1995, and abandoned for failure to prosecute, the required reply may also be met by the filing of a request for continued examination in compliance with § 1.114. In an application or patent, abandoned or lapsed for failure to pay the issue fee or any portion thereof, the required reply must be the payment of the issue fee or any outstanding balance thereof.

(2) the petition fee as set forth in 37 CFR 1.17(l);

(3) a showing to the satisfaction of the Commissioner that the entire delay in filing the required reply from the due date for the reply until the filing of a grantable petition pursuant to 37 CFR 1.137(a) was unavoidable; and

(4) any terminal disclaimer (and fee as set forth in 37 CFR 1.20(d)) required pursuant to 37 CFR 1.137(c)).

[2]Effective December 1, 1997, the provisions of 37 CFR 1.137(b) now provide that where the delay in reply was unintentional, a petition may be filed to revive an abandoned application or a lapsed patent pursuant to 37 CFR 1.137(b). A grantable petition filed under the provisions of 37 CFR 1.137(b) must be accompanied by:

(1) the required reply, unless previously filed. In a nonprovisional application abandoned for failure to prosecute, the required reply may be met by the filing of a continuing application. In a nonprovisional application filed on or after June 8, 1995, and abandoned for failure to prosecute, the required reply may also be met by the filing of a request for continued examination in compliance with § 1.114. In an application or patent, abandoned or lapsed for failure to pay the issue fee or any portion thereof, the required reply must be the payment of the issue fee or any outstanding balance thereof. In an application abandoned for failure to pay the publication fee, the required reply must include payment of the publication fee.

(2) the petition fee as set forth in 37 CFR 1.17(m);

(3) a statement that the entire delay in filing the required reply from the due date for the reply until the filing of a grantable petition pursuant to 37 CFR 1.137(b) was unintentional. The Commissioner may required additional information where there is a question whether the delay was unintentional; and

(4) any terminal disclaimer (and fee as set forth in 37 CFR 1.20(d)) required pursuant to 37 CFR 1.137(c)).

The filing of a petition under the unintentional standard cannot be intentionally delayed and therefore should be filed promptly. A person seeking revival due to unintentional delay cannot make a statement that the delay was unintentional unless the entire delay, including the delay from the date it was discovered that the application was abandoned until the filing of the petition to revive under 37 CFR 1.137(b), was unintentional. A statement that the delay was unintentional is not appropriate if petitioner intentionally delayed the filing of a petition for revival under 37 CFR 1.137(b).

Further correspondence with respect to this matter should be addressed as follows:

By mail: Mail Stop Petition
Commissioner for Patents
P.O. Box 1450
Alexandria, VA 22313-1450

By FAX: (571) 273-8300

Telephone inquiries concerning this matter may be directed to the undersigned Petitions Attorney at (571) 272-3212.

Patricia Faison-Ball

Patricia Faison-Ball
Senior Petitions Attorney
Office of Petitions

UNITED STATES PATENT AND TRADEMARK OFFICE

Commissioner for Patents
United States Patent and Trademark Office
P.O. Box 1450
Alexandria, VA 22313-1450
www.uspto.gov

JOHANNES SCHNEEBERGER
118B MENDOCINO ST.
BRISBANE CA 94005

COPY MAILED

AUG 01 2007

OFFICE OF PETITIONS

In re Application of
John D. Davis
Application No. 10/410,505
Filed: April 8, 2003
Attorney Docket No.: MMC-101

ON PETITION

This is a decision on the petition filed November 27, 2006 to withdraw the holding of abandonment, under 37 CFR 1.181.

The petition under 37 CFR 1.181 is **DISMISSED**.

Any request for reconsideration of this decision must be submitted within **TWO (2) MONTHS** from the mail date of this decision. Extensions of time under 37 CFR 1.136(a) are permitted. The reconsideration request should include a cover letter entitled "Renewed Petition under 37 CFR 1.181," or, as explained in more detail below, "...under 37 CFR 1.137(a)" or (b). This is not a final agency decision.

Petitioner argues that a response to the Notice of Allowability mailed July 11, 2006 was filed October 3, 2006, that a Supplemental Notice of Allowability dated August 4, 2006 was not mailed to petitioner, that in view of typographic errors in the Supplemental Notice of Allowability dated September 15, 2006, it was the responsibility of the USPTO to withdraw the application from issue. In view of the above, petitioner believes that the holding of abandonment mailed November 15, 2006 was mailed in error and should be withdrawn.

A review of the file reveals that a Notice of Allowance and Issue Fee Due as well as a Notice of Allowability was mailed on July 11, 2006. Subsequent to the July 11, 2006 mailing, a Supplemental Notice of Allowability was mailed September 15, 2006. Apparently, petitioners must have been under the belief that in view of perceived errors in the Supplemental Notice of Allowability, that no response to the Notice of Allowance was due until such time as a corrected Supplemental Notice of Allowability was mailed and thus did not pay the issue fee due by October 11, 2006.

Petitioners are advised that if an Office communication is mailed and that in the absence of that communication being withdrawn by the USPTO, then by law a response is required within the time period set out in the Office communication received. The failure to file a

response causes the application to become abandoned, even if that communication was sent in error or petitioners believed there to be an error.

This application properly became abandoned October 12, 2006 for failure to timely pay the Issue Fee prior to the expiration of the period for response and therefore the Notice of Abandonment mailed November 15, 2006 was appropriate.

In view thereof, the holding of abandonment will not be withdrawn.

ALTERNATIVE VENUES

Petitioner may wish to consider filing a renewed petition under 37 CFR 1.137(a)[1] or 37 CFR 1.137(b),[2] which now provides that where the delay in reply was unintentional, a petition may be filed to revive an abandoned application or a lapsed patent pursuant to 37 CFR 1.137(b).

---

[1]A grantable petition under 37 CFR 1.137(a) must be accompanied by:

(1) the required reply, unless previously filed; In a nonprovisional application abandoned for failure to prosecute, the required reply may be met by the filing of a continuing application. In a nonprovisional utility or plant application filed on or after June 8, 1995, and abandoned for failure to prosecute, the required reply may also be met by the filing of a request for continued examination in compliance with § 1.114. In an application or patent, abandoned or lapsed for failure to pay the issue fee or any portion thereof, the required reply must be the payment of the issue fee or any outstanding balance thereof.

(2) the petition fee as set forth in 37 CFR 1.17(l);

(3) a showing to the satisfaction of the Commissioner that the entire delay in filing the required reply from the due date for the reply until the filing of a grantable petition pursuant to 37 CFR 1.137(a) was unavoidable; and

(4) any terminal disclaimer (and fee as set forth in 37 CFR 1.20(d)) required pursuant to 37 CFR 1.137(c)).

[2]Effective December 1, 1997, the provisions of 37 CFR 1.137(b) now provide that where the delay in reply was unintentional, a petition may be filed to revive an abandoned application or a lapsed patent pursuant to 37 CFR 1.137(b). A grantable petition filed under the provisions of 37 CFR 1.137(b) must be accompanied by:

(1) the required reply, unless previously filed. In a nonprovisional application abandoned for failure to prosecute, the required reply may be met by the filing of a continuing application. In a nonprovisional application filed on or after June 8, 1995, and abandoned for failure to prosecute, the required reply may also be met by the filing of a request for continued examination in compliance with § 1.114. In an application or patent, abandoned or lapsed for failure to pay the issue fee or any portion thereof, the required reply must be the payment of the issue fee or any outstanding balance thereof. In an application abandoned for failure to pay the publication fee, the required reply must include payment of the publication fee.

(2) the petition fee as set forth in 37 CFR 1.17(m);

(3) a statement that the entire delay in filing the required reply from the due date for the reply until the filing of a grantable petition pursuant to 37 CFR 1.137(b) was unintentional. The Commissioner may required additional information where there is a question whether the delay was unintentional; and

(4) any terminal disclaimer (and fee as set forth in 37 CFR 1.20(d)) required pursuant to 37 CFR 1.137(c)).

The filing of a petition under the unintentional standard cannot be intentionally delayed and therefore should be filed promptly. A person seeking revival due to unintentional delay cannot make a statement that the delay was unintentional unless the entire delay, including the delay from the date it was discovered that the application was abandoned until the filing of the petition to revive under 37 CFR 1.137(b), was unintentional. A statement that the delay was unintentional is not appropriate if petitioner intentionally delayed the filing of a petition for revival under 37 CFR 1.137(b).

Further correspondence with respect to this matter should be addressed as follows:

By mail: Mail Stop Petition
Commissioner for Patents
P.O. Box 1450
Alexandria, VA 22313-1450

By FAX: (571) 273-8300

Telephone inquiries concerning this matter may be directed to the undersigned Petitions Attorney at (571) 272-3212.

Patricia Faison-Ball

Patricia Faison-Ball
Senior Petitions Attorney
Office of Petitions

UNITED STATES PATENT AND TRADEMARK OFFICE

Commissioner for Patents
United States Patent and Trademark Office
P.O. Box 1450
Alexandria, VA 22313-1450
www.uspto.gov

JOHANNES SCHNEEBERGER
118B MENDOCINO ST.
BRISBANE CA 94005

COPY MAILED

OCT 12 2007

OFFICE OF PETITIONS

In re Application of
John D. Davis
Application No. 10/410,505
Filed: April 8, 2003
Attorney Docket No.: MMC-101

ON PETITION

This is a decision on the petition filed September 30, 2007 under 37 CFR 1.137(b), [1] to revive the above-identified application.

The petition under 37 CFR 1.137 (b) is **GRANTED**.

This application became abandoned October 12, 2006 for failure to timely pay the issue fee on or before October 11, 2006. Accordingly, a Notice of Abandonment was mailed November 15, 2006.

The issue fee, publication fee and petition fee have all been applied.

37 CFR 1.137(b)(3) however, requires a statement that the entire delay in filing the required reply from the due date for the reply until the filing of a grantable petition pursuant to 37 CFR 1.137(b) was unintentional. Since the statement contained in the petition varies from the language required by 37 CFR 1.137(b)(3), the statement

---

[1] Effective December 1, 1997, the provisions of 37 CFR 1.137(b) now provide that where the delay in reply was unintentional, a petition may be filed to revive an abandoned application or a lapsed patent pursuant to 37 CFR 1.137(b). A grantable petition filed under the provisions of 37 CFR 1.137(b) must be accompanied by:

(1) the required reply, unless previously filed. In a nonprovisional application abandoned for failure to prosecute, the required reply may be met by the filing of a continuing application. In a nonprovisional application filed on or after June 8, 1995, and abandoned for failure to prosecute, the required reply may also be met by the filing of a request for continued examination in compliance with § 1.114. In an application or patent, abandoned or lapsed for failure to pay the issue fee or any portion thereof, the required reply must be the payment of the issue fee or any outstanding balance thereof.

(2) the petition fee as set forth in 37 CFR 1.17(m);

(3) a statement that the entire delay in filing the required reply from the due date for the reply until the filing of a grantable petition pursuant to 37 CFR 1.137(b) was unintentional. The Commissioner may required additional information where there is a question whether the delay was unintentional; and

(4) any terminal disclaimer (and fee as set forth in 37 CFR 1.20(d)) required pursuant to 37 CFR 1.137(c)).

contained in the petition is being construed as the statement required by 37 CFR 1.137(b)(3). Petitioner must notify the Office if this is **not** a correct interpretation of the statement contained in the petition.

All other requirements of 37 CFR 1.137(b) having now been met, this application file is being forwarded to the Publishing Division to be processed into a patent.

Telephone inquiries concerning this matter may be directed to the undersigned Petitions Attorney at (571) 272-3212.

Patricia Faison-Ball

Patricia Faison-Ball
Senior Petitions Attorney
Office of Petitions

UNITED STATES PATENT AND TRADEMARK OFFICE

UNITED STATES DEPARTMENT OF COMMERCE
United States Patent and Trademark Office
Address: COMMISSIONER FOR PATENTS
P.O. Box 1450
Alexandria, Virginia 22313-1450
www.uspto.gov

KNOBBE MARTENS OLSON & BEAR LLP
2040 MAIN STREET
FOURTEENTH FLOOR
IRVINE, CA 92614

Mail Date: 04/20/2010

Applicant	: Wolfgang Eberle	: DECISION ON REQUEST FOR
Patent Number	: 7653412	: RECALCULATION of PATENT
Issue Date	: 01/26/2010	: TERM ADJUSTMENT IN VIEW
Appliction No	: 10/410,512	: OF WYETH AND NOTICE OF INTENT TO
Filed	: 04/07/2003	: ISSUE CERTIFICATE OF CORRECTION
		:

The Request for Recalculation is **GRANTED** to the extent indicated.

The patent term adjustment has been determined to be **563** days. The USPTO will *sua sponte* issue a certificate of correction reflecting the amount of PTA days determined by the recalculation.

Prior to the issuance of the certificate of correction, the USPTO will afford patentee an opportunity to be heard and request reconsideration. Accordingly, patentee has **one month or thirty (30) days**, whichever is longer, to file a request for reconsideration of this patent term adjustment calculation. See 35 U.S.C. 154(b)(3)(B)(ii) and 37 CFR 1.322(a)(4). No extensions of time will be granted under 37 CFR 1.136.

Patentee should use document code PET.OP if electronically filing a request for reconsideration of this patent term adjustment calculation. The patentee must also include the information required by 37 CFR 1.705(b)(2) and the fee required by 37 CFR 1.18(e). If patentee does not file a timely request for reconsideration of this patent term adjustment calculation including the information required by 37 CFR 1.705(b)(2) and the fee required by 37 CFR 1.18(e), the USPTO will issue a certificate of correction reflecting the PTA determination noted above.

Patentee should be aware that in order to preserve the right to review in the United States District Court for the District of Columbia of the USPTO patent term adjustment determination, patentee must ensure that he or she also take the steps required under 35 U.S.C. 154(b)(4)(A) in a timely manner. Nothing in the request for recalculation should be construed as providing an alternative time frame for commencing a civil action under 35 U.S.C. 154(b)(4)(A).

Any questions concerning this decision should be directed to the Office of Patent Legal Administration at 571-272-7702.

UNITED STATES PATENT AND TRADEMARK OFFICE

UNITED STATES DEPARTMENT OF COMMERCE
United States Patent and Trademark Office
Address: COMMISSIONER FOR PATENTS
P.O. Box 1450
Alexandria, Virginia 22313-1450
www.uspto.gov

APPLICATION NO.	FILING DATE	FIRST NAMED INVENTOR	ATTORNEY DOCKET NO.	CONFIRMATION NO.
10/410,527	04/09/2003	Ernest V. Groman	1275/193	3769

2101 7590 05/21/2010
Sunstein Kann Murphy & Timbers LLP
125 SUMMER STREET
BOSTON, MA 02110-1618

EXAMINER
SOROUSH, LAYLA

ART UNIT	PAPER NUMBER
1627	

MAIL DATE	DELIVERY MODE
05/21/2010	PAPER

Please find below and/or attached an Office communication concerning this application or proceeding.

The time period for reply, if any, is set in the attached communication.

UNITED STATES PATENT AND TRADEMARK OFFICE

Commissioner for Patents
United States Patent and Trademark Office
P.O. Box 1450
Alexandria, VA 22313-1450
www.uspto.gov

MAY 21 2010

Sunstein Kann Murphy & Timbers LLP
125 SUMMER STREET
BOSTON MA 02110-1618

In re Application of:	:
Groman et al.	:
Serial No.: 10/410,527	: PETITION DECISION
Filed: April 9, 2003	:
Attorney Docket No.: **1275/193**	:

This is in response to the petition under 37 CFR § 1.181, filed April 9, 2010, requesting that the finality of the Office action of October 23, 2009 be withdrawn.

It is noted that applicants filed this petition under 37 CFR § 1.181 on April 9, 2010 requesting relief from the finality of the Office action mailed October 23, 2009. This petition was not filed within two months from the mailing of the final Office action and is thus untimely. Nevertheless, a decision on this petition is rendered herein.

BACKGROUND

More recently, the examiner mailed a non-final Office action on March 17, 2009 setting a three month statutory limit for reply. At the time of this non-final Office action, claims 5-24 were pending, claims 9-13 were withdrawn as being directed toward a non-elected invention and claims 5-8 and 14-24 were examined on their merits. Claims 5-8 were rejected under 35 USC 102 (b) as being anticipated by Maruno et al. Claims 14-19 were rejected under 35 USC 103 (a) as being unpatentable over Maruno et al. Claims 20-24 were rejected under 35 USC 103 (a) as being unpatentable over Maruno et al. as applied to claims 5-8 above, and further in view of Bulte et al. Claims 5-8 and 14-24 were provisionally rejected on the ground of nonstatutory double patenting over claims 35-36 of copending Application No. 10/386394.

On June 17, 2009, applicants submitted a response including arguments.

On July 16, 2009, a telephonic interview was held wherein the rejections of record were discussed.

On August 14, 2009, applicants submitted a supplemental response including arguments and amendments to the claims.

On October 23, 2009, the examiner mailed a final Office action setting a three month statutory limit for reply. At the time of this final Office action, claims 5-13 and 19-24 were pending, claims 9-13 were withdrawn as being directed toward a non-elected invention and claims 5-8 and 19-24 were examined on their merits. Claims 5-8 were again rejected under 35 USC 102 (b) as being anticipated by Maruno et al. Claim 19 was again rejected under 35 USC 103 (a) as being unpatentable over Maruno et al. Claims 20-24 were again rejected under 35 USC 103 (a) as being unpatentable over Maruno et al. as applied to claims 5-8 above, and further in view of Bulte et al. Claims 5-8 and 19-24 were again provisionally rejected on the ground of nonstatutory double patenting over claims 35-36 of copending Application No. 10/386394.

On March 10, 2010, a telephonic interview was held wherein Maruno et al. was discussed.

On March 12, 2010 an amendment after final was filed.

On December 11, 2008, an advisory action was mailed to applicant wherein it was stated that the Double Patenting rejection was withdrawn in view of the filing of the Terminal Disclaimer. The declaration was also indicated as not being entered because it was not timely filed.

In response thereto, applicants filed this petition on April 9, 2010, requesting that the finality of the Office action of October 23, 2009 be withdrawn.

DISCUSSION

The petition and the file history have been carefully considered.

Applicants "petition for removal of finality of the outstanding Office Action mailed October 23, 2009 ("final office action"), on the grounds that there has been inadequate, if any, consideration of uncontradicted declarations, long of record, establishing that the principal reference of record, Maruno EP EPO450092B 1, fails to enable the preparation of autoclavable polysaccharide iron oxide complexes." Applicants also "petition for reopening of prosecution for proper consideration of the declarations and related evidence of record establishing that the Maruno reference of record is not enabling for the proposition for which it is cited." Applicants also argue "The Examiner failed to address the merits of any of the declarations of record, but merely stated: "More specifically, an affidavits *[sic]* cannot overcome the anticipatory rejection over Maruno et al."

Applicants' arguments have been accorded careful consideration. It is pointed out that a Declaration filed under 1.132 cannot overcome an anticipatory 35 USC 102 rejection because a 102 rejection is a statutory bar. A declaration under 1.132 showing unexpected results would be acceptable to overcome an obviousness rejection under 35 USC 103 but not the 102 rejection set forth herein. Furthermore, over the course of prosecution, the declarations have been addressed. See, for example, the actions of July 10, 2008 and Marcy 17, 2009. The declaration of February 19, 2010 was also not considered in the Advisory Action of March 12, 2010 for the following

reason: "The affidavit or other evidence filed after a final action, but before or on the date of filing a Notice of Appeal will not be entered because applicant failed to provide a showing of good and sufficient reasons why the affidavit or other evidence is necessary and was not earlier presented. See 37 CFR 1.116(e)."

Accordingly, it is considered that applicants' arguments are not persuasive. Consequently, the final Office action of October 23, 2009 is not considered improper and the finality of said Office action will not be withdrawn.

DECISION

The petition is **DENIED.**

Any new or renewed petition must be filed within TWO MONTHS of the mail date of this decision.

Should there be any questions about this decision please contact Marianne C. Seidel, by letter addressed to Director, TC 1600, at the address listed above, or by telephone at 571-272-0584 or by facsimile sent to the general Office facsimile number, 703-872-9306.

Remy Yucel
Director, Technology Center 1600

UNITED STATES PATENT AND TRADEMARK OFFICE

COMMISSIONER FOR PATENTS
UNITED STATES PATENT AND TRADEMARK OFFICE
P.O. BOX 1450
ALEXANDRIA, VA 22313-1450
www.uspto.gov

COOK, ALEX, MCFARRON, MANZO,
CUMMINGS & MEHLER, LTD.
SUITE 2850
200 WEST ADAMS
CHICAGO, IL 60606

COPY MAILED

DEC 16 2004

OFFICE OF PETITIONS

In re Application of	:	
Masayuki Uno	:	
Application No. 10/410,540	:	ON PETITION
Filed: April 9, 2003	:	
Attorney Docket No. 1025-0109.01	:	

This is a decision on the petition, filed December 8, 2004, under 37 CFR 1.313(c)(2) to withdraw the above-identified application from issue after payment of the issue fee.

The petition is **GRANTED**.

The above-identified application is withdrawn from issue for consideration of a submission under 37 CFR 1.114 (request for continued examination). See 37 CFR 1.313(c)(2).

Petitioner is advised that the issue fee paid on September 7, 2004, in the above-identified application cannot be refunded. If, however, the above-identified application is again allowed, petitioner may request that it be applied towards the issue fee required by the new Notice of Allowance. [1]

Telephone inquiries relating to this decision should be directed to the undersigned at (571) 272-3204.

The application is being referred to Technology Center AU 2819 for further processing of the request for continued examination under 37 CFR 1.114 filed December 8, 2004.

Sherry D. Brinkley
Petitions Examiner
Office of Petitions
Office of the Deputy Commissioner
for Patent Examination Policy

[1]The request to apply the issue fee to the new Notice may be satisfied by completing and returning the new Issue Fee Transmittal Form PTOL-85(b), which includes the following language thereon: "Commissioner for Patents is requested to apply the Issue Fee and Publication Fee (if any) or re-apply any previously paid issue fee to the application identified above." Petitioner is advised that, whether a fee is indicated as being due or not, the Issue Fee Transmittal Form **must** be completed and timely submitted to avoid abandonment. Note the language in bold text on the first page of the Notice of Allowance and Fee(s) Due (PTOL-85).

10410569

SPE RESPONSE FOR CERTIFICATE OF CORRECTION

Paper No.: —

DATE : 1/6/05

TO SPE OF : ART UNIT 2818

SUBJECT : Request for Certificate of Correction on Patent No.: 6804134 B1

A response is requested with respect to the accompanying request for a certificate of correction.

Please complete this form and return with file, within **7** days to:
Certificates of Correction Branch - PK 3-915
Palm location **7580** - Tel. No. 305-8309

With respect to the change(s) requested, correcting Office and/or Applicant's errors, should the patent read as shown in the certificate of correction? No new matter should be introduced, nor should the scope or meaning of the claims be changed.

Virginia Tolbert

Thank You For Your Assistance

Certificates of Correction Branch

The request for issuing the above-identified correction(s) is hereby:
Note your decision on the appropriate box.

- ☒ **Approved** — All changes apply.
- ☐ **Approved in Part** — Specify below which changes **do not** apply.
- ☐ **Denied** — State the reasons for denial below.

Comments:

SPE

2818
Art Unit

UNITED STATES PATENT AND TRADEMARK OFFICE

COMMISSIONER FOR PATENTS
UNITED STATES PATENT AND TRADEMARK OFFICE
P.O. BOX 1450
ALEXANDRIA, VA 22313-1450
www.uspto.gov

Paper No. 6

HANSRA PATENT SERVICES
4525 GLEN MEADOWS PLACE
BELLINGHAM, WA 98226

COPY MAILED

DEC 18 2003

OFFICE OF PETITIONS

In re Application of
Richard M. Ehrlich et al
Application No. 10/410,576
Filed: April 8, 2003
For: METHOD AND APPARATUS FOR PROVIDING VARIABLE-GAIN, ITERATIVE EMBEDDED RUNOUT CORRECTION IN A DISK DRIVE

DECISION GRANTING STATUS UNDER 37 CFR 1.47(A)

This is in response to the petition under 37 CFR 1.47(a), filed September 15, 2003.

The petition is granted.

Petitioner has shown that the non-signing inventor has refused to join in the filing of the above-identified application.

The above-identified application and papers have been reviewed and found in compliance with 37 CFR 1.47(a). This application is hereby accorded Rule 1.47(a) status. As provided in Rule 1.47(c), this Office will forward notice of this application's filing to the non-signing inventor at the address given in the petition. Notice of the filing of this application will also be published in the Official Gazette.

Telephone inquiries regarding this decision should be directed to Petitions Examiner Wan Laymon at (703) 306-5685.

This application is being forwarded to Technology Center AU 2651 for examination in due course.

Frances Hicks
Lead Petitions Examiner
Office of Petitions
Office of the Deputy Commissioner
for Patent Examination Policy

UNITED STATES PATENT AND TRADEMARK OFFICE

COMMISSIONER FOR PATENTS
UNITED STATES PATENT AND TRADEMARK OFFICE
P.O. BOX 1450
ALEXANDRIA, VA 22313-1450
www.uspto.gov

RICHARD M. EHRLICH
12092 MARILLA DRIVE
SARATOGA, CA 95070

COPY MAILED
DEC 18 2003
OFFICE OF PETITIONS

In re Application of
Ehrlich; Brunnett; and Fremont
Application No. 10/410,576
Filed: April 8, 2003
For: METHODS AND APPARATUS FOR PROVIDING VARIABLE-GAIN, ITERATIVE EMBEDDED RUNOUT CORRECTION IN A DISK DRIVE

Dear Mr. Ehrlich:

You are named as a joint inventor in the above identified United States patent application, filed under the provisions of 35 U.S.C. 116 (United States Code), and 37 CFR 1.47(a), Rules of Practice in Patent Cases. Should a patent be granted on the application you will be designated therein as a joint inventor.

As a named inventor you are entitled to inspect any paper in the file wrapper of the application, order copies of all or any part thereof (at a prepaid cost per 37 CFR 1.19) or make your position of record in the application. Alternatively, you may arrange to do any of the preceding through a registered patent attorney or agent presenting written authorization from you. If you care to join in the application, counsel of record (see below) would presumably assist you. Joining in the application would entail the filing of an appropriate oath or declaration by you pursuant to 37 CFR 1.63.

Telephone inquiries regarding this communication should be directed to Wan Laymon at (703) 306-5685. Requests for information regarding your application should be directed to the File Information Unit at (703) 308-2733. Information regarding how to pay for and order a copy of the application, or a specific paper in the application, should be directed to Certification Division at (703) 308-9726 or 1 (800) 972-6382 (outside the Washington D.C. area).

Frances Hicks
Frances Hicks
Lead Petitions Examiner
Office of Petitions
Office of the Deputy Commissioner
for Patent Examination Policy

cc:
HANSRA PATENT SERVICES
4525 GLEN MEADOWS PLACE
BELLINGHAM, WA 98226

UNITED STATES PATENT AND TRADEMARK OFFICE

Commissioner for Patents
United States Patent and Trademark Office
P.O. Box 1450
Alexandria, VA 22313-1450
www.uspto.gov

COPY MAILED

JUN 23 2006

OFFICE OF PETITIONS

HANSRA PATENT SERVICES
4525 GLEN MEADOWS PLACE
BELLINGHAM WA 98226

In re Application of
EHRLICH et al.
Application No.: 10/410,576
Attorney Docket No.:3123-470

: DECISION on PETITION
:
: UNDER 37 CFR 1.137(b)
:

This is a decision on the petition under 37 CFR 1.137(b), filed March 17, 2006 to revive the above-identified application.

The petition is **GRANTED**.

The above-identified application became abandoned for failure to reply in a timely manner to the non-final Office action mailed December 14, 2004, which set a shortened statutory period for reply of three (3) months. No extensions of time under the provisions of 37 CFR 1.136(a) were obtained. Accordingly, by operation of law, the above-identified application became abandoned at midnight on March 14, 2005.

The petition satisfies the conditions for revival pursuant to the provisions of 37 CFR 1.137(b) in that (1) the reply in the form of an amendment, (2) the petition fee; and (3) the required statement of unintentional delay have been received. Accordingly, the reply to the non-final Office action of December 14, 2004 is accepted as having been unintentionally delayed.

The application is being referred to Technology Center AU 2651.

Telephone inquiries concerning this decision should be directed to the undersigned at (571) 272-3286.

Cynthia M. Kratz
Attorney Advisor

UNITED STATES PATENT AND TRADEMARK OFFICE

COMMISSIONER FOR PATENTS
UNITED STATES PATENT AND TRADEMARK OFFICE
P.O. BOX 1450
ALEXANDRIA, VA 22313-1450
www.uspto.gov

Paper No. 5

WOLF GREENFIELD & SACKS, PC
FEDERAL RESERVE PLAZA
600 ATLANTIC AVENUE
BOSTON MA 02210-2211

COPY MAILED

OCT 09 2003

OFFICE OF PETITIONS

In re Application of
Altshuler
Application No. 10/410,578
Filed: April 9, 2003
Attorney Docket No. A00736.70004.US
For: METHOD AND APPARATUS FOR PROCESSING HARD MATERIAL

ON PETITION

This is a decision on the petition filed August 1, 2003, requesting that the Notice to File Missing Parts of Nonprovisional Application (Notice), mailed June 3, 2003, be withdrawn insofar as it alleges that Figures 3A, 6A, and 7A were omitted upon initial filing. The petition will be treated under 37 CFR 1.53(e).

The application was filed on April 9, 2003. However, on June 3, 2003 , the Office of Initial Patent Examination mailed a Notice stating that the application had been accorded a filing date of April 9, 2003, and stating, *inter alia*, that Figures 3A, 6A, and 7A described in the specification appeared to have been omitted.

In response, the present petition was filed. Petitioner states that Figure 3A, 6A, and 7A were present among the originally filed sheets of drawings. A review of the application file reveals that the specification references Figures 1, 2, 3, 3A, 4, 5, 6, 6A, 7, 7A, and 8. However, only drawing Figures 1-8 are present. The petition does not allege and is not accompanied by any evidence that any sheets of drawings containing the labels "Fig. 3A", "Fig. 6A", or "Fig. 7A" were present in the Office on April 9, 2003. While petitioner filed all the intended drawing figures on April 9, 2003, the drawing figures were not properly labeled.

The Notice mailed June 3, 2003, was correct in advising applicant that Figures 3A, 6A, and 7A appeared to have been omitted. The Notice was properly mailed and will not be withdrawn. The petition fee is required, since the petition was not necessary to correct any PTO error.

The petition under 37 CFR 1.53(e) is dismissed.

The application is being returned the Office of Initial Patent Examination for further processing with the presently accorded filing date of April 9, 2003. After processing, the application will be forwarded to Technology Center 3700 where a draftsman will consider the proposed correction of the drawing figure labels that was filed on August 1, 2003.

Telephone inquiries concerning this decision should be directed to the undersigned at (703) 308-6712.

E. Shirene Willis

E. Shirene Willis
Senior Petitions Attorney
Office of Petitions

SPE RESPONSE FOR CERTIFICATE OF CORRECTION

Paper No.: _____

DATE : 4/28/08

TO SPE OF : ART UNIT 2612

SUBJECT : Request for Certificate of Correction for Appl. No.: 10/410 582 Patent No.: 7113108

Please respond to this request for a certificate of correction within 7 days.

Please review the requested changes/corrections as shown in the **COCIN** document(s) in the IFW application image. No new matter should be introduced, nor should the scope or meaning of the claims be changed.

Please check Drawings / Ref. Cited

Please complete the response (see below) and forward the completed response to scanning using document code **COCX**.

Emma Yang

Certificates of Correction Branch

703-308-9390 ext. 117

Thank You For Your Assistance

The request for issuing the above-identified correction(s) is hereby:

Note your decision on the appropriate box.

- [X] Approved — All changes apply.
- [ ] Approved in Part — Specify below which changes do not apply.
- [ ] Denied — State the reasons for denial below.

Comments: _____

/Benjamin C. Lee/ — SPE

2612 — Art Unit

UNITED STATES PATENT AND TRADEMARK OFFICE

Commissioner for Patents
United States Patent and Trademark Office
P.O. Box 1450
Alexandria, VA 22313-1450
www.uspto.gov

COPY MAILED

MAR 0 1 2007

OFFICE OF PETITIONS

KNOBBE MARTENS OLSON & BEAR LLP
2040 MAIN STREET
FOURTEENTH FLOOR
IRVINE, CA 92614

In re Patent No. 6,967,566	:	
Issued: November 22, 2005	:	
Application No.: 10/410,583	:	ON PETITION
Filed: April 7, 2003	:	
Attorney Docket No: **P-10493-US**	:	

This is a regarding the petition under 37 CFR 1.28(c) filed September 14, 2006.

The petition is **GRANTED.**

By the instant petition, petitioner informs the USPTO that the inventive entity is not eligible for small status. The loss of small entity status is acknowledged and noted in the application file.

Payment of the deficiency in the issue fee is of record as of September 14, 2006.

The application file will be directed to the Files Repository.

Telephone inquiries regarding this decision should be directed to the undersigned at (571) 272-3222.

Kenya A. McLaughlin
Petitions Attorney
Office of Petitions

SPE RESPONSE FOR CERTIFICATE OF CORRECTION

Paper No.:20091103

DATE : November 03, 2009

TO SPE OF : ART UNIT 2627

SUBJECT : Request for Certificate of Correction on Patent No.: 7,471,604

A response is requested with respect to the accompanying request for a certificate of correction.

Please complete this form and return with file, within **7** days to:
Certificates of Correction Branch - ST (South Tower) 9A22
Palm location **7590** - Tel. No. (703) 305-8309

With respect to the change(s) requested, correcting Office and/or Applicant's errors, should the patent read as shown in the certificate of correction? No new matter should be introduced, nor should the scope or meaning of the claims be changed.

Thank You For Your Assistance **Certificates of Correction Branch**

The request for issuing the above-identified correction(s) is hereby:

Note your decision on the appropriated box.

☐ **Approved** All changes apply.

☐ **Approved in Part** Specify below which changes **do not** apply.

☒ **Denied** State the reasons for denial below.

Comments:

Applicant has not provided neither an explanation of what errors are contained in the drawings in US Patent 7,471,604 nor what has been changed in the replacement drawings filed 23 March 2009. A careful review of both sets of drawings do not show any changes being made other than "(REPLACEMENT SHEET)" be added on some of the figures. This is not a proper identifier for patent printing purposes nor is it understood as to it's meaning. Therefore, without detailed outline of the changes made, the Request should be Denied.

/ANDREA L WELLINGTON/
Supervisory Patent Examiner.Art Unit 2627

11-4-09

UNITED STATES DEPARTMENT OF COMMERCE
Patent and Trademark Office
ASSISTANT SECRETARY OF COMMERCE AND
COMMISSIONER OF PATENTS AND TRADEMARKS
Washington, D.C. 20231

Patent No. : 7,471,604
Application No: 10/410,593
Inventor(s) : Hyun-soo Park, et. al.
Issued : December 30, 2008
Title : APPARATUS FOR DETECTING AND CORRECTING WOBBLE ERROR AND PHASE LOCKED LOOP CIRCUIT USING THE SAME

Re: Request for Certificate of Correction

Consideration has been given your request for the issuance of a certificate of correction for the above-identified patent under the provisions of Rules 1.322.

Respecting the alleged errors in the drawings, applicant has not provided neither an explanation of what errors are contained in the drawings in US Patent 7,471,604 nor what has been changed in the replacement drawings filed 23 March 2009. A careful review of both sets of drawings do not show any changes being made other than "(REPLACEMENT SHEET)" be added on some of the figures. This is not a paroper identifier for patent printing purposes nor isit understood as to it's meaning. Therfore, without detailed outline of the changes made, the Request should be Denied.

In view of the foregoing your request is hereby denied.

However, your attention is directed to C.F.R. 1.324, wherein a request is being made to add or delete inventor(s), after issuance of the patent, which a decision is rendered on, by the Supervisory Patent Examiner.

Eva James
For Mary Diggs
Decisions & Certificates
of Correction Branch
(703) 756-1583 or 1580

Michael D. Stein
1400 Eye St., NW, Suite 300
Washington, DC 20005

ej

UNITED STATES PATENT AND TRADEMARK OFFICE

COMMISSIONER FOR PATENTS
UNITED STATES PATENT AND TRADEMARK OFFICE
P.O. BOX 1450
ALEXANDRIA, VA 22313-1450
www.uspto.gov

Paper No. 6

TOWNSEND AND TOWNSEND AND CREW, LLP
TWO EMBARCADERO CENTER
EIGHTH FLOOR
SAN FRANCISCO, CA 94111-3834

COPY MAILED
FEB 26 2004
OFFICE OF PETITIONS

In re Application of	:
Bertolero, et al.	: DECISION GRANTING
Application No. 10/410,618	: STATUS UNDER 37 CFR
Filed: April 8, 2003	: 1.47(a)
Dkt. No.: 021063-001000US	:
For: CARDIAC TREATMENT	:
DEVICES AND METHODS	:

This decision is in response to the petition under 37 CFR 1.47(a), filed February 19, 2004 (Certificate of Mailing date of February 2, 2004).

The petition is **GRANTED**.

Petitioner has shown that inventor Daniel J. Conley has refused to execute the declaration for the above-identified application.

The above-identified application and papers have been reviewed and found in compliance with 37 CFR 1.47(a). This application is hereby accorded Rule 1.47(a) status.

As provided in Rule 1.47(c), this Office will forward notice of this application's filing to the non-signing inventors at the addresses given in the petition. Notice of the filing of this application will also be published in the Official Gazette.

After this decision is mailed, the above-identified application will be returned to the Office of Initial Patent Examination for further processing.

Telephone inquiries regarding this decision should be directed to the undersigned at (703) 305-0310.

Alesia M. Brown
Senior Petitions Attorney
Office of Petitions

UNITED STATES PATENT AND TRADEMARK OFFICE

COMMISSIONER FOR PATENTS
UNITED STATES PATENT AND TRADEMARK OFFICE
P.O. BOX 1450
ALEXANDRIA, VA 22313-1450
www.uspto.gov

DANIEL J. CONLEY
510 KNOLLWOOD COURT
SANTA ROSA, CA 95403

COPY MAILED
FEB 2 6 2004
OFFICE OF PETITIONS

In re Application of	:	
Bertolero, et al.	:	
Application No.: 10/410,618	:	LETTER
Filed: April 8, 2003	:	
Atty. Dkt. No.: 021063-001000US	:	
For: CARDIAC TREATMENT DEVICES	:	
AND METHODS	:	

Dear Sir:

You are named as an inventor in the above-identified United States patent application filed under the provisions of 35 U.S.C. 116 (United States Code) and 37 C.F.R. § 1.47(a), Rules of Practice in Patent Cases. Should a patent be granted on the application you will be designated therein as a joint inventor.

As a named inventor you are entitled to inspect any paper in the file wrapper of the application, order copies of all or any part thereof (at a prepaid cost as per 37 C.F.R. § 1.19) or make your position of record in the application. Alternatively, you may arrange to do any of the preceding through a registered patent attorney or agent presenting written authorization from you. If you care to join the application, counsel of record (see below) would presumably assist you. Joining in the application would entail the filing of an appropriate oath or declaration by you pursuant to 37 C.F.R. § 1.63.

Telephone inquiries regarding this communication should be directed to the undersigned at (703) 305-0310. Requests for information regarding your application should be directed to the File Information Unit at (703) 308-2733. Information regarding how to pay for and order a copy of the application, or a specific paper in the application, should be directed to Certification Division at (703) 308-9726 or 1-800-972-6382 (outside the Washington D.C. area).

Telephone inquiries regarding this matter should be directed to the undersigned at (703) 305-0310.

Alesia M. Brown
Senior Petitions Attorney
Office of Petitions

UNITED STATES PATENT AND TRADEMARK OFFICE

Commissioner for Patents
United States Patent and Trademark Office
P.O. Box 1450
Alexandria, VA 22313-1450
www.uspto.gov

NOVAK DRUCE & QUIGG, LLP
1300 EYE STREET NW
400 EAST TOWER
WASHINGTON, DC 20005

COPY MAILED

JAN 0 4 2006

OFFICE OF PETITIONS

In re Application of

Sabelstrom, et al.

Application No. 10/710,619

Filed: July 26, 2004

Attorney Docket No. 7589.186.PCUS00

DECISION ON PETITION

This is a decision on the petition under 37 CFR 1.137(b), filed December 12, 2005, to revive the above-identified application.

The petition is **GRANTED**.

The above-cited application became abandoned for failure to reply in a timely manner to the non-final Office action mailed March 1, 2005, which set a shortened statutory period for reply of three (3) months. No extension of time pursuant to 37 CFR 1.136(a) was obtained. Accordingly, the application became abandoned on June 2, 2005. A Notice of Abandonment was mailed on October 21, 2005.

The amendment filed December 12, 2005, is noted and made of record.

The application is being forwarded to Technology Center 3600, GAU 3683 for further processing.

Telephone inquiries concerning this decision should be directed to the undersigned at (571) 272-3222.

Kenya A. McLaughlin

Kenya A. McLaughlin
Petitions Attorney
Office of Petitions

UNITED STATES PATENT AND TRADEMARK OFFICE

COMMISSIONER FOR PATENTS
UNITED STATES PATENT AND TRADEMARK OFFICE
P.O. BOX 1450
ALEXANDRIA, VA 22313-1450
www.uspto.gov

Paper No. 3

DAVIDSON DAVIDSON & KAPPEL
485 SEVENTH AVENUE, 14TH FLOOR
NEW YORK, NY 10018

COPY MAILED

DEC 1 2 2003

OFFICE OF PETITIONS

In re Application of	:	
Pierre-Alain Cotte	:	
Application No. 10/410,622	:	NOTICE
Filed: April 9, 2003	:	
Attorney Docket No. 5007.1015	:	

This is a notice regarding your request for acceptance of a fee deficiency submission under 37 CFR 1.28. On September 1, 1998, the Court of Appeals for the Federal Circuit held that 37 CFR 1.28(c) is the sole provision governing the time for correction of the erroneous payment of the issue fee as a small entity. **See DH Technology v. Synergystex International, Inc. 154 F.3d 1333, 47 USPQ2d 1865 (Fed. Cir. Sept. 1, 1998).**

The Office no longer investigates or rejects original or reissue applications under 37 CFR 1.56. **1098 Off. Gaz. Pat. Office 502 (January 3, 1989)**. Therefore, nothing in this Notice is intended to imply that an investigation was done.

Your fee deficiency submission under 37 CFR 1.28 is hereby **ACCEPTED**.

Inquiries related to this communication should be directed to the Office of Petitions Staff at (703) 305-9285.

This file is being forwarded to Technology Center AU 2600.

Wan Laymon
Petitions Examiner
Office of Petitions
Office of the Deputy Commissioner
for Patent Examination Policy

UNITED STATES PATENT AND TRADEMARK OFFICE

Commissioner for Patents
United States Patent and Trademark Office
P.O. Box 1450
Alexandria, VA 22313-1450
www.uspto.gov

LADAS & PARRY
26 WEST 61ST STREET
NEW YORK, NY 10023

COPY MAILED

MAY 0 1 2006

OFFICE OF PETITIONS

In re Application of :
Gunter Gerner :
Application No. 10/410,654 :
Filed: April 9, 2003 :
Attorney Docket No. U014207-2 :

DECISION DISMISSING PETITION

This is a decision on the petition filed June 6, 2005, requesting that a continuing application be accorded a filing date. The petition will be treated under 37 CFR 1.53.

The petition is **dismissed**.

On April 9, 2003, the above-identified application was filed. On March 1, 2004, a non-final Office action was mailed allowing a shortened statutory period for reply of three-months from its mailing date. The record reflects that a continuation application was sent to the USPTO via facsimile on September 1, 2004, with a request for an extension of time within the third month. A Notice of Abandonment was mailed on October 4, 2004, indicating a response to the non-final Office action was not received.

The instant petition was filed on June 6, 2005. Petitioner maintains that the continuation application sent September 1, 2004, should be accorded a filing date of that same date, despite having being transmitted via facsimile because petitioner was unable to deposit the continuing application with the United States Postal Service because of the Republication National Convention that was in New York City on September 1, 2004.

The large majority of correspondence sent to the USPTO may be transmitted via facsimile pursuant to 37 CFR 1.6, and receive the date of transmission as the filing date for the correspondence pursuant to 37 CFR 1.8, but there are some categories of correspondence that may not be transmitted via facsimile as provided in 37 CFR 1.6(d). More specifically, 37 CFR 1.6(d), provides, in pertinent part, that, "[f]acsmile transmissions are not permitted and, if submitted, will not be accorded a date of receipt in the following situations . . . correspondence which cannot receive the benefit of the certificate of mailing or transmission as specified in § 1.8(a)(2)(i)(A) through (d) and (F), and § 1.8(a)(2)(iii)(A)". It is further noted that 37 CFR 1.8(a)(2)(i)(A) specifically provides that the certificate of mailing and transmission procedures do not apply to the filing of a national patent application specification and drawings or other correspondence for purpose of obtaining an application filing date. Accordingly, the continuing application transmitted via facsimile on September 1, 2004, cannot be accorded an application filing date and does not constitute a proper response to the non-final Office action.

It is further noted that petitioner indicates that the continuing application was not deposited with the United States Postal Service because of the Republican National Convention. In some case postal service interruptions and emergencies may be cause for alternate filing procedures to be instituted. However, before such alternate procedures may be considered acceptable, the Director pursuant to 35 U.S.C. § 21 must declare a postal service interruption and emergency. There is no indication that the Director declared such an emergency in New York City on September 1, 2004. Accordingly, the alleged

unavailability of some post offices in New York City on September 1, 2004, would not have any effect on the procedures for obtaining an application filing date for the continuation application as provided in 37 CFR 1.53 and 37 CFR 1.6 and 1.8.

Accordingly, the continuing application transmitted September 1, 2004, will not be accorded a filing date at this juncture.

It is noted that a fee was incorrectly charged to deposit account 12-0425 for a Request for Continued Examination. The amount of $770.00 will be refunded to deposit account 12-0425, in due course

Any inquiries related to this decision should be directed to the undersigned at (571) 272-3222.

Kenya A. McLaughlin

Kenya A. McLaughlin
Petitions Attorney
Office of Petitions

UNITED STATES PATENT AND TRADEMARK OFFICE

Commissioner for Patents
United States Patent and Trademark Office
P.O. Box 1450
Alexandria, VA 22313-1450
www.uspto.gov

Peter J. Yim
Morrison & Foerster LLP
425 Market Street
San Francisco, CA 94105-2482

COPY MAILED

JUL 17 2007

OFFICE OF PETITIONS

In re Application of	:	
Chia-Che Kuan et al.	:	
Application No. 10/410,668	:	DECISION ON PETITION
Filed: April 8, 2003	:	TO WITHDRAW
Attorney Docket No. 529252000600	:	FROM RECORD
	:	

This is a decision on the Request to Withdraw as attorney or agent of record under 37 C.F.R. § 1.36(b), filed November 30, 2006.

The request is **NOT APPROVED** as moot.

A review of the file record indicates that the power of attorney to Morrison & Foerster LLP has been revoked by the assignee of the patent application on March 25, 2007. Accordingly, the request to withdraw under 37 C.F.R. § 1.36(b) is moot.

All future communications from the Office will continue to be directed to the below-listed address until otherwise notified by applicant.

Telephone inquires concerning this decision should be directed to Terri Williams at 571-272-2991.

Terri Williams

Terri Williams
Petitions Examiner
Office of Petitions

cc: **Blakely Sokoloff Taylor & Zafman**
1279 Oakmead Parkway
Sunnyvale, CA 94085-4040

UNITED STATES PATENT AND TRADEMARK OFFICE

Commissioner for Patents
United States Patent and Trademark Office
P.O. Box 1450
Alexandria, VA 22313-1450
www.uspto.gov

PETRU BACIU
31-20 54th STREET APT. 5-K
WOODSIDE NY 11377

COPY MAILED

MAR 2 1 2006

OFFICE OF PETITIONS

In re Application of
Petru BACIU
Application No. 10/410,680
Filed: April 10, 2003
Attorney Docket No. N/A

ON PETITION

This is a decision on petition under 37 CFR 1.137(b), filed on December 16, 2005 to revive the above-identified application.

The petition is **GRANTED**.

The above-identified application became abandoned for failure to reply in a timely manner to the Notice of Non-Responsive Amendment mailed on October 8, 2004. Specifically, petitioner has failed to obtain necessary extensions of time under provisions of 37 CFR 1.136(a) within the time period initially set by said Notice of Non-Responsive Amendment and by the Notice of Additional Fee Due mailed on March 23, 2005. The Notice of Non-Responsive Amendment set a shortened statutory period for reply of one (1) month and the Notice of Additional Fee Due gave petitioner one (1) month period for response or the reminder of the previously set period for response, whichever is longer. On April 1, 2005 petitioner has submitted the $60 one (1) month extension of time fee, although a five (5) month extension of time fee was required at this point. Accordingly, since no necessary extensions of time under provisions of 37 CFR 1.136(a) were obtained, the application became abandoned, by operation of law, on December 9, 2004.

The petition satisfies the conditions for revival pursuant to the provisions of 37 CFR 1.137(b) in that (1) a reply in the form of the argument and amendment under 37 CFR 1.111 filed on January 31, 2005; (2) the petition fee of $750; and (3) the required statement of unintentional delay have been received. Accordingly, the reply to the Notice of Non-Responsive Amendment of October 8, 2004 is accepted as having been unintentionally delayed.

Telephone inquiries concerning this decision should be directed to Anatoly Vortman at (571) 272-6051, or in his absence to the undersigned at (571) 272-7099.

Application No. 10/410,680

The application file is being referred to Technology Center AU 3672 for appropriate action on the amendment of January 31, 2005.

David Bucci
Petitions Examiner
Office of Petitions

UNITED STATES PATENT AND TRADEMARK OFFICE

Commissioner for Patents
United States Patent and Trademark Office
P.O. Box 1450
Alexandria, VA 22313-1450
www.uspto.gov

MACPHERSON KWOK CHEN & HEID LLP
2033 GATEWAY PLACE
SUITE 400
SAN JOSE, CA 95110

COPY MAILED

JAN 0 4 2007

OFFICE OF PETITIONS

In re Application of Kemeny et al.	:	
Application No. 10/410,690	:	DECISION ON PETITION
Filing Date: April 9, 2003	:	UNDER 37 CFR 1.78(a)(3)
Attorney Docket No. M-16268 US	:	

This is a decision on the petition under 37 CFR 1.78(a)(3), filed February 14, 2006, to accept an unintentionally delayed claim under 35 U.S.C. §§ 120 and 365(c) for the benefit of priority to prior-filed international Application No. PCT/HU01/00102, filed October 24, 2001, as set forth in the accompanying amendment.

The petition is **GRANTED**.

A petition for acceptance of a claim for late priority under 37 CFR 1.78(a)(3) is only applicable to those applications filed on or after November 29, 2000. Further, the petition is appropriate only after the expiration of the period specified in 37 CFR 1.78(a)(2)(ii). In addition, the petition under 37 CFR 1.78(a)(3) must be accompanied by:

(1) the reference required by 35 U.S.C. § 120 and 37 CFR 1.78(a)(2)(i) of the prior-filed application, unless previously submitted;
(2) the surcharge set forth in § 1.17(t); and
(3) a statement that the entire delay between the date the claim was due under 37 CFR 1.78(a)(2)(ii) and the date the claim was filed was unintentional. The Director may require additional information where there is a question whether the delay was unintentional.

All of the above requirements having been satisfied, the late claim for priority under 35 U.S.C. § 120 is accepted as being unintentionally delayed.

The granting of the petition to accept the delayed benefit claim to the prior-filed application under 37 CFR 1.78(a)(3) should not be construed as meaning that this application is entitled to the benefit of the prior-filed applications. In order for this application to be entitled to the benefit of the prior-filed application, all other requirements under 35 U.S.C. § 120 and 37 CFR 1.78(a)(1) and (a)(2) must be met. Similarly, the fact that the corrected Filing Receipt accompanying this decision on petition includes the prior-filed application should not be construed as meaning that applicant is entitled to the claim for benefit of priority to the prior-filed application noted thereon. Accordingly, the

examiner will, in due course, consider this benefit claim and determine whether the application is entitled to the benefit of the earlier filing date.

A corrected Filing Receipt, which includes the priority claim to the prior-filed PCT application, accompanies this decision on petition.

This application is being forwarded to the examiner of Technology Center Art Unit 3739 for consideration of applicant's entitlement to claim benefit of priority under 35 U.S.C. §§ 120 and 365(c) to the above-noted, prior-filed PCT application.

Any inquiries concerning this decision may be directed to Senior Petitions Attorney Steven Brantley at (571) 272-3203. All other inquiries concerning either the examination procedures or status of the application should be directed to the Technology Center.

Charles Steven Brantley
Senior Petitions Attorney
Office of Petitions

ATTACHMENT: Corrected Filing Receipt

UNITED STATES PATENT AND TRADEMARK OFFICE

COMMISSIONER FOR PATENTS
UNITED STATES PATENT AND TRADEMARK OFFICE
P.O. BOX 1450
ALEXANDRIA, VA 22313-1450
www.uspto.gov

MAY 14 2004

CUMMINGS & LOCKWOOD
GRANITE SQUARE
700 STATE STREET
P.O. BOX-1960
NEW HAVEN CT 06509-1960

In re Application of	:
Keith Solomon et al	:
Serial No.: 10/410,709	: PETITION TO MAKE SPECIAL
Filed: February 10, 2004	:
Attorney Docket No.: 06244.00002	:

This is in response to applicants' petition filed January 26, 2004, to make the above-identified application special under the provisions of 37 CFR 1.102(d).

Applicant has satisfied the provisions set forth in M.P.E.P. 708.02, VIII. Therefor the petition is **GRANTED**.

The following condition applies to the grant of this petition: If, upon examination, it is determined that a restriction requirement is necessary because of multiple inventions being claimed, applicant will be required to make an election without traverse of a single invention to be prosecuted. Failure to make an election without traverse will void the special status accorded in this decision.

The application will be forwarded the examiner for action on the merits commensurate with this decision.

Should there be any questions with regard to this letter please contact William R. Dixon, Jr. by letter addressed to the Director, Technology Center 1600, P.O. Box 1450, Alexandria, VA 22313-1450, or by telephone at 571-272-0519 or by facsimile transmission at the general Office facsimile number, (703) 872-9306.

William R. Dixon, Jr.
Special Program Examiner
Technology Center 1600

UNITED STATES PATENT AND TRADEMARK OFFICE

Commissioner for Patents
United States Patent and Trademark Office
P.O. Box 1450
Alexandria, VA 22313-1450
www.uspto.gov

Paper No.

Barry E. Sammons
Quarles & Brady, LLP
411 East Wisconsin Avenue
Milwaukee WI 53202

COPY MAILED
DEC 05 2007
OFFICE OF PETITIONS

In re Application of	:	
Andrzej Jesmanowicz	:	
Application No. 10/410,710	:	DECISION ON PETITION
Filed: April 9, 2003	:	UNDER 37 C.F.R.
Attorney Docket Number:	:	§ 1.137(B)
650053.00006	:	
Title: PERFUSION MAGNETIC	:	
RESONANCE IMAGING USING	:	
ENCODED RF TAGGING PULSES	:	

This is a decision on the petition filed August 7, 2007, pursuant to 37 C.F.R. § 1.137(b)[1], to revive the above-identified application.

The above-identified application became abandoned for failure to submit the issue and publication fees in a timely manner in reply to the Notice of Allowance and Issue Fee Due, mailed April 5, 2007, which set a shortened statutory period for reply of three months. No extensions of time are permitted for transmitting

1 A grantable petition pursuant to 37 C.F.R § 1.137(b) must be accompanied by:
(1) The reply required to the outstanding Office action or notice, unless previously filed;
(2) The petition fee as set forth in § 1.17(m);
(3) A statement that the entire delay in filing the required reply from the due date for the reply until the filing of a grantable petition pursuant to this paragraph was unintentional. The Commissioner may require additional information where there is a question whether the delay was unintentional, and;
(4) Any terminal disclaimer (and fee as set forth in § 1.20(d)) required pursuant to paragraph (d) of this section.

issue or publication fees[2]. Accordingly, the above-identified application became abandoned on July 6, 2007. A Notice of Abandonment was mailed on July 31, 2007.

37 C.F.R. § 1.137(b)(3) requires a statement that the entire delay in filing the required reply from the due date for the reply until the filing of a grantable petition pursuant to 37 C.F.R. § 1.137(b) was unintentional. Since the statement contained in the present petition varies from the language required by 37 C.F.R. § 1.137(b)(3), the statement contained in the present petition is being construed as the statement required by 37 C.F.R. § 1.137(b)(3) and Petitioner must notify the Office if this is not a correct interpretation of the statement contained in the present petition.

With the present petition, Petitioner has submitted the issue and publication fees, the petition fee, and a statement that is being construed as the proper statement of unintentional delay. No terminal disclaimer is required.

As such, the petition under 37 C.F.R. § 1.137(b) is **GRANTED**.

The Office of Patent Publication will be notified of this decision so that the present application can be processed into a patent.

Telephone inquiries regarding *this decision* should be directed to the undersigned at (571) 272-3225[3]. All other inquiries concerning the status of the application should be directed to the Office of Patent Publication at 571-272-4200.

Paul Shanoski
Senior Attorney
Office of Petitions
United States Patent and Trademark Office

---

2 See MPEP § 710.02(e).
3 Petitioner will note that all practice before the Office should be in writing, and the action of the Office will be based exclusively on the written record in the Office. See 37 C.F.R. § 1.2. As such, Petitioner is reminded that no telephone discussion may be controlling or considered authority for any further action(s) of Petitioner.

UNITED STATES PATENT AND TRADEMARK OFFICE

UNITED STATES DEPARTMENT OF COMMERCE
United States Patent and Trademark Office
Address: COMMISSIONER FOR PATENTS
P.O. Box 1450
Alexandria, Virginia 22313-1450
www.uspto.gov

APPL NO.	FILING OR 371 (c) DATE	ART UNIT	FIL FEE REC'D	ATTY.DOCKET NO	DRAWINGS	TOT CLMS	IND CLMS
10/410,729	04/09/2003	3744	375	012095	13	20	3

CONFIRMATION NO. 6991

CORRECTED FILING RECEIPT

OC000000011561225

30767
KEISLING & PIEPER PLC
1 EAST CENTER STREET, SUITE 217
FAYETTEVILLE, AR 72701

Date Mailed: 12/23/2003

Receipt is acknowledged of this regular Patent Application. It will be considered in its order and you will be notified as to the results of the examination. Be sure to provide the U.S. APPLICATION NUMBER, FILING DATE, NAME OF APPLICANT, and TITLE OF INVENTION when inquiring about this application. Fees transmitted by check or draft are subject to collection. Please verify the accuracy of the data presented on this receipt. **If an error is noted on this Filing Receipt, please write to the Office of Initial Patent Examination's Filing Receipt Corrections, facsimile number 703-746-9195. Please provide a copy of this Filing Receipt with the changes noted thereon. If you received a "Notice to File Missing Parts" for this application, please submit any corrections to this Filing Receipt with your reply to the Notice. When the USPTO processes the reply to the Notice, the USPTO will generate another Filing Receipt incorporating the requested corrections (if appropriate).**

Applicant(s)

Marcus Ray Sullivan, Fort Smith, AR;
Gary Alan Hogue, Fort Smith, AR;

Domestic Priority data as claimed by applicant

This application is a CIP of 10/189,646 07/02/2002 PAT 6,546,743

Foreign Applications

If Required, Foreign Filing License Granted: 06/03/2003

Projected Publication Date: Request for Non-Publication Acknowledged

Non-Publication Request: Yes

Early Publication Request: No

**** SMALL ENTITY ****

Title

Evaporative cooling apparatus

Preliminary Class

062

LICENSE FOR FOREIGN FILING UNDER
Title 35, United States Code, Section 184
Title 37, Code of Federal Regulations, 5.11 & 5.15

GRANTED

The applicant has been granted a license under 35 U.S.C. 184, if the phrase "IF REQUIRED, FOREIGN FILING LICENSE GRANTED" followed by a date appears on this form. Such licenses are issued in all applications where the conditions for issuance of a license have been met, regardless of whether or not a license may be required as set forth in 37 CFR 5.15. The scope and limitations of this license are set forth in 37 CFR 5.15(a) unless an earlier license has been issued under 37 CFR 5.15(b). The license is subject to revocation upon written notification. The date indicated is the effective date of the license, unless an earlier license of similar scope has been granted under 37 CFR 5.13 or 5.14.

This license is to be retained by the licensee and may be used at any time on or after the effective date thereof unless it is revoked. This license is automatically transferred to any related applications(s) filed under 37 CFR 1.53(d). This license is not retroactive.

The grant of a license does not in any way lessen the responsibility of a licensee for the security of the subject matter as imposed by any Government contract or the provisions of existing laws relating to espionage and the national security or the export of technical data. Licensees should apprise themselves of current regulations especially with respect to certain countries, of other agencies, particularly the Office of Defense Trade Controls, Department of State (with respect to Arms, Munitions and Implements of War (22 CFR 121-128)); the Office of Export Administration, Department of Commerce (15 CFR 370.10 (j)); the Office of Foreign Assets Control, Department of Treasury (31 CFR Parts 500+) and the Department of Energy.

NOT GRANTED

No license under 35 U.S.C. 184 has been granted at this time, if the phrase "IF REQUIRED, FOREIGN FILING LICENSE GRANTED" DOES NOT appear on this form. Applicant may still petition for a license under 37 CFR 5.12, if a license is desired before the expiration of 6 months from the filing date of the application. If 6 months has lapsed from the filing date of this application and the licensee has not received any indication of a secrecy order under 35 U.S.C. 181, the licensee may foreign file the application pursuant to 37 CFR 5.15(b).

UNITED STATES PATENT AND TRADEMARK OFFICE

Commissioner for Patents
United States Patent and Trademark Office
P.O. Box 1450
Alexandria, VA 22313-1450
www.uspto.gov

JOY CHARLES-ERICKSON
957 NASA ROAD ONE
#400
HOUSTON TX 77058

COPY MAILED

AUG 0 3 2007

OFFICE OF PETITIONS

In re Application of	:	
Charles-Erickson et al.	:	
Application No. 10/410,732	:	ON PETITION
Filed: April 10, 2003	:	
Title: PERSONAL, MEDICAL & FINANCIAL RISK MANAGEMENT DEVICE	:	

This is a decision on the petition under 37 C.F.R. § 1.137(b), filed July 9, 2007, to revive the above-identified application.

The petition is **DISMISSED**.

Any request for reconsideration must be submitted within TWO (2) MONTHS from the mail date of this decision. No further petition fee is required for the request. Extensions of time under 37 CFR 1.136(a) are permitted. The reconsideration request should include a cover letter entitled "Renewed Petition under 37 CFR 1.137(b)." This is **not** a final agency action within the meaning of 5 U.S.C. § 704.

This application became abandoned for failure to timely reply to the non-final Office action mailed January 10, 2005. No extensions of time under the provisions of 37 CFR 1.136(a) were obtained. Accordingly, this application became abandoned on April 11, 2005. A Notice of Abandonment was mailed August 1, 2005.

A grantable petition under 37 CFR 1.137(b) must be accompanied by:
(1) the required reply,[1]
(2) the petition fee,
(3) a statement that the entire delay in filing the required reply from the due date for the reply until the filing of a grantable petition pursuant to 37 CFR 1.137(b) was unintentional, and
(4) a terminal disclaimer and fee if the application was filed on or before June 8, 1995 or if the application is a design application.

[1] In a nonprovisional application abandoned for failure to prosecute, the required reply may be met by the filing of a continuing application. In an application or patent, abandoned or lapsed for failure to pay the issue fee or any portion thereof, the required reply must be the payment of the issue fee or any outstanding balance thereof.

Where there is a question as to whether either the abandonment or the delay in filing a petition under 37 CFR 1.137 was unintentional, the Commissioner may require additional information.[2]

The instant petition lacks items (1) and (3).

As to item (1), although petition did submit an amendment, it was not signed. Amendments filed in an application must be signed by:

(1) An attorney or agent of record appointed in compliance with § 1.34(b);
(2) A registered attorney or agent not of record who acts in a representative capacity under the provisions of § 1.34(a);
(3) The assignee of record of the entire interest, if there is an assignee of record of the entire interest;
(4) An assignee of record of an undivided part interest, and any assignee(s) of the remaining interest and any applicant retaining an interest, if there is an assignee of record of an undividing part interest; or
(5) All of the applicants (§§ 1.42. 1.43 and 1.47) for patent, unless there is an assignee of record of the entire interest and such assignee has taken action in the application in accordance with §§ 3.71 and 3.73.

As to item (3), the petition lacked the required statement of unintentional delay.

There is no indication that the person signing the instant petition was ever given a power of attorney or authorization of agent to prosecute the above-identified application. If the person signing the instant petition desires to receive future correspondence regarding this application, the appropriate power of attorney or authorization of agent must be submitted. While a courtesy copy of this decision is being mailed to the person signing the instant petition, all future correspondence will be directed solely to the address currently of record until such time as appropriate instructions are received to the contrary.

Further correspondence with respect to this matter should be addressed as follows:

By mail: Mail Stop PETITIONS
Commissioner for Patents
Post Office Box 1450
Alexandria, VA 22313-1450

By hand: Customer Window located at:

U.S. Patent and Trademark Office
Customer Service Window Randolph Building
401 Dulany Street
Alexandria, VA 22314

By fax: (571) 273-8300
ATTN: Office of Petitions

---

[2] See MPEP 711.03(c)(III)(C) and (D).

Any questions concerning this matter may be directed to the undersigned at (571) 272-3206.

Liana Walsh
Petitions Examiner
Office of Petitions

Cc:

DELPHINE M. JAMES
2656 SOUTH LOOP WEST SUITE 170
HOUSTON, TX 77054

UNITED STATES PATENT AND TRADEMARK OFFICE

Commissioner for Patents
United States Patent and Trademark Office
P.O. Box 1450
Alexandria, VA 22313-1450
www.uspto.gov

DELPHINE M. JAMES
2656 SOUTH LOOP WEST #170
HOUSTON TX 77054

COPY MAILED

SEP 19 2007

OFFICE OF PETITIONS

In re Application of	:	
Charles-Erickson et al.	:	
Application No. 10/410,732	:	ON PETITION
Filed: April 10, 2003	:	
Title: PERSONAL, MEDICAL & FINANCIAL RISK MANAGEMENT DEVICE	:	

This is a decision on the renewed petition under 37 C.F.R. § 1.137(b), filed September 17, 2007, to revive the above-identified application.

The petition is **DISMISSED**.

Any request for reconsideration must be submitted within TWO (2) MONTHS from the mail date of this decision. No further petition fee is required for the request. Extensions of time under 37 CFR 1.136(a) are permitted. The reconsideration request should include a cover letter entitled "Renewed Petition under 37 CFR 1.137(b)." This is **not** a final agency action within the meaning of 5 U.S.C. § 704.

A grantable petition under 37 CFR 1.137(b) must be accompanied by:
(1) the required reply,[1]
(2) the petition fee,
(3) a statement that the entire delay in filing the required reply from the due date for the reply until the filing of a grantable petition pursuant to 37 CFR 1.137(b) was unintentional, and
(4) a terminal disclaimer and fee if the application was filed on or before June 8, 1995 or if the application is a design application.

Where there is a question as to whether either the abandonment or the delay in filing a petition under 37 CFR 1.137 was unintentional, the Commissioner may require additional information.[2]

The instant petition continues to lack item(s) (3) as listed above. As required by 37 CFR 1.137(b), a statement that the entire delay in filing the required reply from the due date for the reply until the filing of a grantable petition. A blank petition, which has the required statement listed thereon, is enclosed for petitioner's convenience.

---

[1] In a nonprovisional application abandoned for failure to prosecute, the required reply may be met by the filing of a continuing application. In an application or patent, abandoned or lapsed for failure to pay the issue fee or any portion thereof, the required reply must be the payment of the issue fee or any outstanding balance thereof.

[2] See MPEP 711.03(c)(III)(C) and (D).

The amendment submitted with the instant petition now complies, as it is signed.

Further correspondence with respect to this matter should be addressed as follows:

By mail: Mail Stop PETITIONS
Commissioner for Patents
Post Office Box 1450
Alexandria, VA 22313-1450

By hand: Customer Window located at:

U.S. Patent and Trademark Office
Customer Service Window Randolph Building
401 Dulany Street
Alexandria, VA 22314

By fax: (571) 273-8300
ATTN: Office of Petitions

Any questions concerning this matter may be directed to the undersigned at (571) 272-3206.

Liana Walsh
Petitions Examiner
Office of Petitions

Enclosure: PTO/SB/64

PTO/SB/64 (04-07)
Approved for use through 09/30/2007. OMB 0651-0031
U.S. Patent and Trademark Office; U.S. DEPARTMENT OF COMMERCE
Under the Paperwork Reduction Act of 1995, no persons are required to respond to a collection of information unless it displays a valid OMB control number.

PETITION FOR REVIVAL OF AN APPLICATION FOR PATENT ABANDONED UNINTENTIONALLY UNDER 37 CFR 1.137(b)

Docket Number (Optional)

First named inventor:

Application No.: Art Unit:

Filed: Examiner:

Title:

Attention: Office of Petitions
Mail Stop Petition
Commissioner for Patents
P.O. Box 1450
Alexandria, VA 22313-1450
FAX (571) 273-8300

NOTE: If information or assistance is needed in completing this form, please contact Petitions Information at (571) 272-3282.

The above-identified application became abandoned for failure to file a timely and proper reply to a notice or action by the United States Patent and Trademark Office. The date of abandonment is the day after the expiration date of the period set for reply in the office notice or action plus an extensions of time actually obtained.

APPLICANT HEREBY PETITIONS FOR REVIVAL OF THIS APPLICATION

NOTE: A grantable petition requires the following items:
(1) Petition fee;
(2) Reply and/or issue fee;
(3) Terminal disclaimer with disclaimer fee - required for all utility and plant applications filed before June 8, 1995; and for all design applications; and
(4) Statement that the entire delay was unintentional.

1. Petition fee

☐ Small entity-fee $ _____ (37 CFR 1.17(m)). Applicant claims small entity status. See 37 CFR 1.27.

☐ Other than small entity – fee $ _____ (37 CFR 1.17(m))

2. Reply and/or fee

A. The reply and/or fee to the above-noted Office action in the form of _____(identify type of reply):

☐ has been filed previously on _____.
☐ is enclosed herewith.

B. The issue fee and publication fee (if applicable) of $ _____.

☐ has been paid previously on _____.
☐ is enclosed herewith.

This collection of information is required by 37 CFR 1.137(b). The information is required to obtain or retain a benefit by the public which is to file (and by the USPTO to process) an application. Confidentiality is governed by 35 U.S.C. 122 and 37 CFR 1.11 and 1.14. This collection is estimated to take 1.0 hour to complete, including gathering, preparing, and submitting the completed application form to the USPTO. Time will vary depending upon the individual case. Any comments on the amount of time you require to complete this form and/or suggestions for reducing this burden, should be sent to the Chief Information Officer, U.S. Patent and Trademark Office, U.S. Department of Commerce, P.O. Box 1450, Alexandria, VA 22313-1450. DO NOT SEND FEES OR COMPLETED FORMS TO THIS ADDRESS. **SEND TO: Mail Stop Petition, Commissioner for Patents, P.O. Box 1450, Alexandria, VA 22313-1450.**

If you need assistance in completing the form, call 1-800-PTO-9199 and select option 2.

Under the Paperwork Reduction Act of 1995, no persons are required to respond to a collection of information unless it displays a valid OMB control number.

3. Terminal disclaimer with disclaimer fee

☐ Since this utility/plant application was filed on or after June 8, 1995, no terminal disclaimer is required.

☐ A terminal disclaimer (and disclaimer fee (37 CFR 1.20(d)) of $ _____ for a small entity or $ _____ for other than a small entity) disclaiming the required period of time is enclosed herewith (see PTO/SB/63).

4. STATEMENT: The entire delay in filing the required reply from the due date for the required reply until the filing of a grantable petition under 37 CFR 1.137(b) was unintentional. [NOTE: The United States Patent and Trademark Office may require additional information if there is a question as to whether either the abandonment or the delay in filing a petition under 37 CFR 1.137(b) was unintentional (MPEP 711.03(c), subsections (III)(C) and (D)).]

WARNING:

Petitioner/applicant is cautioned to avoid submitting personal information in documents filed in a patent application that may contribute to identity theft. Personal information such as social security numbers, bank account numbers, or credit card numbers (other than a check or credit card authorization form PTO-2038 submitted for payment purposes) is never required by the USPTO to support a petition or an application. If this type of personal information is included in documents submitted to the USPTO, petitioners/applicants should consider redacting such personal information from the documents before submitting them to the USPTO. Petitioner/applicant is advised that the record of a patent application is available to the public after publication of the application (unless a non-publication request in compliance with 37 CFR 1.213(a) is made in the application) or issuance of a patent. Furthermore, the record from an abandoned application may also be available to the public if the application is referenced in a published application or an issued patent (see 37 CFR 1.14). Checks and credit card authorization forms PTO-2038 submitted for payment purposes are not retained in the application file and therefore are not publicly available.

Signature	Date
Typed or printed name	Registration Number, if applicable
Address	Telephone Number
Address	

Enclosures: ☐ Fee Payment

☐ Reply

☐ Terminal Disclaimer Form

☐ Additional sheets containing statements establishing unintentional delay

☐ Other: _____

CERTIFICATE OF MAILING OR TRANSMISSION [37 CFR 1.8(a)]

I hereby certify that this correspondence is being:

☐ Deposited with the United States Postal Service on the date shown below with sufficient postage as first class mail in an envelope addressed to: Mail Stop Petition, Commissioner for Patents, P. O. Box 1450, Alexandria, VA 22313-1450.

☐ Transmitted by facsimile on the date shown below to the United States Patent and Trademark Office at (571) 273-8300.

Date	Signature
	Typed or printed name of person signing certificate

Privacy Act Statement

The **Privacy Act of 1974 (P.L. 93-579)** requires that you be given certain information in connection with your submission of the attached form related to a patent application or patent. Accordingly, pursuant to the requirements of the Act, please be advised that: (1) the general authority for the collection of this information is 35 U.S.C. 2(b)(2); (2) furnishing of the information solicited is voluntary; and (3) the principal purpose for which the information is used by the U.S. Patent and Trademark Office is to process and/or examine your submission related to a patent application or patent. If you do not furnish the requested information, the U.S. Patent and Trademark Office may not be able to process and/or examine your submission, which may result in termination of proceedings or abandonment of the application or expiration of the patent.

The information provided by you in this form will be subject to the following routine uses:

1. The information on this form will be treated confidentially to the extent allowed under the Freedom of Information Act (5 U.S.C. 552) and the Privacy Act (5 U.S.C 552a). Records from this system of records may be disclosed to the Department of Justice to determine whether disclosure of these records is required by the Freedom of Information Act.
2. A record from this system of records may be disclosed, as a routine use, in the course of presenting evidence to a court, magistrate, or administrative tribunal, including disclosures to opposing counsel in the course of settlement negotiations.
3. A record in this system of records may be disclosed, as a routine use, to a Member of Congress submitting a request involving an individual, to whom the record pertains, when the individual has requested assistance from the Member with respect to the subject matter of the record.
4. A record in this system of records may be disclosed, as a routine use, to a contractor of the Agency having need for the information in order to perform a contract. Recipients of information shall be required to comply with the requirements of the Privacy Act of 1974, as amended, pursuant to 5 U.S.C. 552a(m).
5. A record related to an International Application filed under the Patent Cooperation Treaty in this system of records may be disclosed, as a routine use, to the International Bureau of the World Intellectual Property Organization, pursuant to the Patent Cooperation Treaty.
6. A record in this system of records may be disclosed, as a routine use, to another federal agency for purposes of National Security review (35 U.S.C. 181) and for review pursuant to the Atomic Energy Act (42 U.S.C. 218(c)).
7. A record from this system of records may be disclosed, as a routine use, to the Administrator, General Services, or his/her designee, during an inspection of records conducted by GSA as part of that agency's responsibility to recommend improvements in records management practices and programs, under authority of 44 U.S.C. 2904 and 2906. Such disclosure shall be made in accordance with the GSA regulations governing inspection of records for this purpose, and any other relevant (*i.e.*, GSA or Commerce) directive. Such disclosure shall not be used to make determinations about individuals.
8. A record from this system of records may be disclosed, as a routine use, to the public after either publication of the application pursuant to 35 U.S.C. 122(b) or issuance of a patent pursuant to 35 U.S.C. 151. Further, a record may be disclosed, subject to the limitations of 37 CFR 1.14, as a routine use, to the public if the record was filed in an application which became abandoned or in which the proceedings were terminated and which application is referenced by either a published application, an application open to public inspection or an issued patent.
9. A record from this system of records may be disclosed, as a routine use, to a Federal, State, or local law enforcement agency, if the USPTO becomes aware of a violation or potential violation of law or regulation.

UNITED STATES PATENT AND TRADEMARK OFFICE

Commissioner for Patents
United States Patent and Trademark Office
P.O. Box 1450
Alexandria, VA 22313-1450
www.uspto.gov

DELPHINE M. JAMES
2656 SOUTH LOOP WEST #170
HOUSTON TX 77054

COPY MAILED

NOV 29 2007

OFFICE OF PETITIONS

In re Application of	:	
Charles-Erickson et al.	:	
Application No. 10/410,732	:	DECISION ON PETITION
Filed: April 10, 2003	:	
Title: PERSONAL, MEDICAL & FINANCIAL RISK MANAGEMENT DEVICE	:	

This is a decision on the renewed petition under the unintentional provisions of 37 CFR 1.137(b), filed October 19, 2007, to revive the above-identified application.

The petition is **GRANTED**.

The unintentional delay statement requirement has now been fulfilled.

Telephone inquiries concerning this decision should be directed to the undersigned at (571) 272-3206.

This matter is being referred to Technology Center AU 2854 for further examination on the merits.

Liana Walsh
Petitions Examiner
Office of Petitions

UNITED STATES PATENT AND TRADEMARK OFFICE

Commissioner for Patents
United States Patent and Trademark Office
P.O. Box 1450
Alexandria, VA 22313-1450
www.uspto.gov

MEREDITH MARTIN ADDY, ESQ.
BRINKS, HOFER, GILSON & LIONE
P.O. BOX 10395
CHICAGO IL 60610

COPY MAILED

APR 1 5 2008

OFFICE OF PETITIONS

In re Application of	:	
Phil Hetherington, et al.	:	
Application No. 10/410,736	:	DECISION GRANTING PETITION
Filed: April 10, 2003	:	UNDER 37 CFR 1.313(c)(2)
Attorney Docket No. 0007866-0013	:	

This is a decision on the petition under 37 CFR 1.313(c)(2), filed April 11, 2008, to withdraw the above-identified application from issue after payment of the issue fee.

The petition is **GRANTED**.

The above-identified application is withdrawn from issue for consideration of a submission under 37 CFR 1.114 (request for continued examination). *See* 37 CFR 1.313(c)(2).

Petitioner is advised that the issue fee paid on March 11, 2008 cannot be refunded. If, however, this application is again allowed, petitioner may request that it be applied towards the issue fee required by the new Notice of Allowance.[1]

Telephone inquiries regarding this decision should be directed to undersigned at (571) 272-1642.

This application is being referred to Technology Center AU 2615 for processing of the request for continued examination under 37 CFR 1.114 and for consideration of the concurrently filed information disclosure statement.

April M. Wise
Petitions Examiner
Office of Petitions

---

[1] *The request to apply the issue fee to the new Notice may be satisfied by completing and returning the new Part B – Fee(s) Transmittal Form (along with any balance due at the time of submission). Petitioner is advised that the Issue Fee Transmittal Form* ***must*** *be completed and timely submitted to avoid abandonment of the application.*

UNITED STATES PATENT AND TRADEMARK OFFICE

COMMISSIONER FOR PATENTS
UNITED STATES PATENT AND TRADEMARK OFFICE
P.O. BOX 1450
ALEXANDRIA, VA 22313-1450
www.uspto.gov

Paper No. 5

DAVID T. YANG
MORRISON & FOERSTER LLP
35TH FLOOR
555 W. 5TH STREET
LOS ANGELES, CA 90013

COPY MAILED

JAN 3 0 2004

OFFICE OF PETITIONS

In re Application of Michael A. Sheha et al Application No. 10/410,740 Filed: April 10, 2003 For: METHOD AND SYSTEM FOR DYNAMIC ESTIMATION AND PREDICTIVE ROUTE GENERATION	DECISION GRANTING STATUS UNDER 37 CFR 1.47(a)

This is a decision on the petition, filed December 3, 2003, which is being treated as a petition under 37 CFR 1.47(a).

The petition is granted.

Petitioner has shown that the non-signing inventor has refused to join in the filing of the above-identified application.

The above-identified application and papers have been reviewed and found in compliance with 37 CFR 1.47(a). This application is hereby accorded Rule 1.47(a) status. As provided in Rule 1.47(c), this Office will forward notice of this application's filing to the non-signing inventor at the address given in the petition. Notice of the filing of this application will also be published in the Official Gazette.

Telephone inquiries regarding this decision should be directed to Irvin Dingle at (703) 306-5684.

This application is being forwarded to Technology Center AU 2681.

Frances Hicks

Frances Hicks
Lead Petitions Examiner
Office of Petitions
Office of the Deputy Commissioner
for Patent Examination Policy

UNITED STATES PATENT AND TRADEMARK OFFICE

COMMISSIONER FOR PATENTS
UNITED STATES PATENT AND TRADEMARK OFFICE
P.O. BOX 1450
ALEXANDRIA, VA 22313-1450
www.uspto.gov

ARUN YARLAGADDA
6 BERRYWOOD LANE
IRVINE, CA 92620

COPY MAILED

JAN 30 2004

OFFICE OF PETITIONS

In re Application of
Michael A. Sheha; Angie Sheha; Stephen Petilli; Arun Yarlagadda
Application No. 10/410,740
Filed: April 10, 2003
For: METHOD AND SYSTEM FOR DYNAMIC ESTIMATION AND PREDICTIVE ROUTE GENERATION

Dear Inventor Yarlagadda:

You are named as a joint inventor in the above identified United States patent application, filed under the provisions of 35 U.S.C. 116 (United States Code), and 37 CFR 1.47(a), Rules of Practice in Patent Cases. Should a patent be granted on the application you will be designated therein as a joint inventor.

As a named inventor you are entitled to inspect any paper in the file wrapper of the application, order copies of all or any part thereof (at a prepaid cost per 37 CFR 1.19) or make your position of record in the application. Alternatively, you may arrange to do any of the preceding through a registered patent attorney or agent presenting written authorization from you. If you care to join in the application, counsel of record (see below) would presumably assist you. Joining in the application would entail the filing of an appropriate oath or declaration by you pursuant to 37 CFR 1.63.

Telephone inquiries regarding this communication should be directed to the Irvin Dingle at (703) 306-5684. Requests for information regarding your application should be directed to the File Information Unit at (703) 308-2733. Information regarding how to pay for and order a copy of the application, or a specific paper in the application, should be directed to Certification Division at (703) 308-9726 or 1 (800) 972-6382 (outside the Washington D.C. area).

Frances Hicks
Frances Hicks
Lead Petitions Examiner
Office of Petitions
Office of the Deputy Commissioner
for Patent Examination Policy

cc:

David Y. Yang
Morrison & Foerster LLP
35th Floor
555 W. 5th Street
Los Angeles, CA 90013

UNITED STATES PATENT AND TRADEMARK OFFICE

COMMISSIONER FOR PATENTS
UNITED STATES PATENT AND TRADEMARK OFFICE
P.O. BOX 1450
ALEXANDRIA, VA 22313-1450
www.uspto.gov

COPY MAILED

JUN 0 9 2006

OFFICE OF PETITIONS

ORIGIN LAW
333 N INDIAN HILL BLVD
SUITE 208
CLAREMONT, CA 91711

In re Patent No. 6,955,084	: DECISION REGARDING PTA
Issued: October 18, 2005	: and NOTICE OF INTENT TO
Application No. 10/410,744	: ISSUE CERTIFICATE OF
Filed: April 10, 2003	: CORRECTION
Atty. Dkt. No.: PD-01-586	:

This decision is in response to the "APPLICATION FOR PATENT TERM ADJUSTMENT UNDER 37 C.F.R. §1.705(d)," filed December 13, 2005.

The request for reconsideration of patent term adjustment is **GRANTED-in Part.** The Office will adjust the PAIR calculation to reflect this decision. In addition, the Office will *sua sponte* issue a certificate of correction to reflect this decision. The correct determination at the time of the issuance of the patent is 324 days.

Applicants are given thirty days to contest this determination. No extensions of time are granted under 37 CFR 1.136. After 30-days the Office will issue the certificate of correction as proposed in this decision.

The above-identified application matured into U.S. Patent No. 6,955,084 on October 18, 2005. The instant request for reconsideration was timely filed December 13, 2005 in accordance with 37 C.F.R. § 1.705(d). The patent issued with a PTA of 266 days. Applicants argue that the adjustment of 266 days is incorrect and that the patent is entitled to an adjustment of 325 days, attributing 479 days to Office delay and 154 days to applicants' failure to engage in reasonable efforts to conclude prosecution.

A review of the application history reveals that applicants arguments are persuasive to the extent herein indicated. In accordance with 37 CFR 1.702(a)(4) and 1.703(a)(6), Office delay of 479 days can be attributed to the Office for failure to issue the patent within four months of the date of receipt of issue fee payment.

The Office delay of 479 days is reduced a total of 155 days in accordance with 37 CFR 1.704(c)(10). The first period of applicant delay began on January 20, 2004 and ended on February 26, 2004 when an IDS submission was filed, a 38-day delay.[1] The second period ran for 56 days until April 22, 2004 when a miscellaneous incoming letter was filed.[2] On June 22, 2004, the Office mailed a response to all three paper (miscellaneous incoming letter + 312 + IDS) and thus 61 days elapsed between the submission of the miscellaneous incoming letter and the mailed response. Overall, the delay amounted to 155 days (56 + 38 + 61= 155). In view thereof, at the time of issuance, the patent was entitled to an adjustment of 324 (479 -155= 324) days.

This application file will be forwarded to the Certificate of Corrections branch for issuance of a certificate of correction to indicate that the term of this patent is extended or adjusted under 35 U.S.C. 154(b) by 324 days.

As noted herein, the required $200.00 application fee has been charged to applicants' deposit account.

Telephone inquiries specific to this matter should be directed to Petitions Attorney Alesia M. Brown at (571) 272-3205.

Kery A. Fries

Kery Fries
Senior Patent Attorney
Office of Patent Legal Administration
Office of Deputy Commissioner
for Patent Examination Policy

CC: Draft Certificate of Correction

[1] Note that the IDS submission and the 312 amendment overlap and applicant cannot be assessed 2 days for every day that overlaps. It noted that applicant assessed a reduction of 37 not 38 days for this period.

[2] Note that the IDS submission and the misc. letter overlap and applicant cannot be assessed 2 days for every day that overlaps.

UNITED STATES PATENT AND TRADEMARK OFFICE

CERTIFICATE OF CORRECTION

PATENT	:	6,955,084 B1
DATED	:	Oct. 18, 2005
INVENTOR(S)	:	Challoner, et al.

It is certified that error appears in the above-identified patent and that said Letters Patent is hereby corrected as shown below:

On the cover page,

[*] Notice: Subject to any disclaimer, the term of this patent is extended or adjusted under 35 USC 154(b) by (266) days

Delete the phrase "by 266 days" and insert – by 324 days--

1731

UNITED STATES PATENT AND TRADEMARK OFFICE

COMMISSIONER FOR PATENTS
UNITED STATES PATENT AND TRADEMARK OFFICE
P.O. BOX 1450
ALEXANDRIA, VA 22313-1450
www.uspto.gov
DIW 02-04

MICHAEL B. MARTIN
PATENT & LICENSING DEPARTMENT
ONDEO NALCO COMPANY
ONDEO NALCO CENTER
NAPERVILLE IL 60563-1198

COPY MAILED

FEB 06 2004

OFFICE OF PETITIONS

In re Application of	:	
Jayne M.A. Walker	:	
Application No. 10/410,753	:	DECISION GRANTING PETITION
Filed: 10 April, 2003	:	
Attorney Docket No. 7732	:	

This is a decision on the petition, filed on 8 December, 2003, under 37 CFR 1.137(f) which is treated as a petition to revive the above-identified nonprovisional application under the unintentional provisions of 37 CFR 1.137(b).

The petition is **GRANTED**.

Petitioner states that the present nonprovisional application is the subject of a foreign or international application filed on 18 September, 2003. However, the U.S. Patent and Trademark Office was unintentionally not notified of this filing within 45 days subsequent to the filing of the subject application in a foreign country.

In view of the above, this application became abandoned pursuant to 35 U.S.C. § 122(b)(2)(B)(iii) and 37 CFR 1.213(c) for failure to timely notify the Office of the filing of an application in a foreign country, or under a multilateral international agreement, that requires publication of applications 18 months after filing.

A petition under 37 CFR 1.137(f) must be accompanied by:

(1) the reply which is met by the notification of such filing in a foreign country or under a multinational treaty;

(2) the petition fee as set forth in 37 CFR 1.17(m); and

(3) a statement that the entire delay in filing the required reply from the due date of the reply until the filing of a grantable petition was unintentional.

The present petition has been found to be in compliance with 37 CFR 1.137(f). Accordingly, the failure to timely notify the Office of a foreign or international filing within 45 days after the date of filing of such foreign or international application as provided by 35 U.S.C. § 122(b)(2)(B)(i) has been rescinded.

A Communication Regarding Rescission of Nonpublication Request and/or Notice of Foreign Filing, which sets forth the projected publication date of 14 October, 2004, was mailed on 9 December, 2003.

The petition fee of $1,330.00 will be charged to counsel's deposit account, No. 14-0105, as authorized in the petition.

The address listed on the petition is different than the correspondence address of record. A courtesy copy of this decision is being mailed to the address noted on the petition. However, until otherwise instructed, all future correspondence regarding this application will be mailed solely to the address of record.

This decision is being forwarded to Technology Center 1700 for examination in due course.

Any inquiries concerning this decision may be directed to the undersigned at 703.308.6918.

D Wood

Douglas I. Wood
Senior Petitions Attorney
Office of Petitions

cc: Michael B. Martin
1601 West Diehl Road
Naperville IL 60563

UNITED STATES PATENT AND TRADEMARK OFFICE

BEFORE THE BOARD OF PATENT APPEALS
AND INTERFERENCES

Ex parte SEKHARIPURAM R. NARAYANAN
and THOMAS I. VALDEZ

Appeal No. 2008-6356
Application No. 10/410,761
Technology Center 1700

Mailed: December 1, 2008

Before DALE M. SHAW, *Chief Appeals Administrator.*

SHAW, *Chief Appeals Administrator.*

DECISION REGARDING WITHDRAWAL OF ATTORNEY

By a paper filed on August 29, 2008, counsel has petitioned to withdraw as attorneys of record in this application.

The petition is GRANTED.

Applicant is advised that the new correspondence address for this application is:

Law Offices of Daniel L. Dawes
5200 Warner Blvd., Suite 106
Huntington Beach, CA 92649

DMS/cam

Joseph C. Andras
David L. Henty
Vic Y. Lin
Richard Myers
Kenneth Sherman
19900 MacArthur Blvd., Suite 1150
Irvine, CA 9212

Law Offices of Daniel L. Dawes
5200 Warner Blvd., Suite 106
Huntington Beach, CA 92649

UNITED STATES PATENT AND TRADEMARK OFFICE

UNITED STATES DEPARTMENT OF COMMERCE
United States Patent and Trademark Office
Address: COMMISSIONER FOR PATENTS
P.O. Box 1450
Alexandria, Virginia 22313-1450
www.uspto.gov

Law Offices of Daniel L. Dawes
Dawes Patent Law Group
5200 Warner Blvd, Ste. 106
Huntington Beach, CA 92649

Mail Date: 04/20/2010

Applicant	: Sekharipuram R. Narayanan	: DECISION ON REQUEST FOR
Patent Number	: 7585577	: RECALCULATION of PATENT
Issue Date	: 09/08/2009	: TERM ADJUSTMENT IN VIEW
Appliction No	: 10/410,761	: OF WYETH AND NOTICE OF INTENT TO
Filed	: 04/09/2003	: ISSUE CERTIFICATE OF CORRECTION
		:

The Request for Recalculation is **GRANTED** to the extent indicated.

The patent term adjustment has been determined to be **1523** days. The USPTO will *sua sponte* issue a certificate of correction reflecting the amount of PTA days determined by the recalculation.

Prior to the issuance of the certificate of correction, the USPTO will afford patentee an opportunity to be heard and request reconsideration. Accordingly, patentee has **one month or thirty (30) days**, whichever is longer, to file a request for reconsideration of this patent term adjustment calculation. See 35 U.S.C. 154(b)(3)(B)(ii) and 37 CFR 1.322(a)(4). No extensions of time will be granted under 37 CFR 1.136.

Patentee should use document code PET.OP if electronically filing a request for reconsideration of this patent term adjustment calculation. The patentee must also include the information required by 37 CFR 1.705(b)(2) and the fee required by 37 CFR 1.18(e). If patentee does not file a timely request for reconsideration of this patent term adjustment calculation including the information required by 37 CFR 1.705(b)(2) and the fee required by 37 CFR 1.18(e), the USPTO will issue a certificate of correction reflecting the PTA determination noted above.

Patentee should be aware that in order to preserve the right to review in the United States District Court for the District of Columbia of the USPTO patent term adjustment determination, patentee must ensure that he or she also take the steps required under 35 U.S.C. 154(b)(4)(A) in a timely manner. Nothing in the request for recalculation should be construed as providing an alternative time frame for commencing a civil action under 35 U.S.C. 154(b)(4)(A).

Any questions concerning this decision should be directed to the Office of Patent Legal Administration at 571-272-7702.

UNITED STATES PATENT AND TRADEMARK OFFICE

COMMISSIONER FOR PATENTS
UNITED STATES PATENT AND TRADEMARK OFFICE
P.O. BOX 1450
ALEXANDRIA, VA 22313-1450
www.uspto.gov

MAY 21 2004

Barbara J. Luther
Quarles & Brady Stretch Lang LLP
Two North Central
Phoenix, AZ 85004-2391

In re Application of	:	
Narayanan et al	:	DECISION ON PETITION
Serial No. : 10/410,762	:	
Filed : April 9, 2003	:	
Attorney Docket No.: 112024.00002 CIB		

This is in response to applicant's "Petition to Make Special Under 37 CFR 1.102" filed April 14, 2004.

The petition and evidence have been reviewed. The requirements under MPEP 708.02, IV have been met. Accordingly, petition is granted. Prosecution will proceed according to the procedure set forth under MPEP 708.02. There is no provision for withdrawal from this special status.

Petition Granted.

Cecilia Tsang

Cecilia Tsang
Special Program Examiner, TC1600

SPE RESPONSE FOR CERTIFICATE OF CORRECTION

Paper No.: _____

DATE : August 18, 2006

TO SPE OF : ART UNIT 1631

SUBJECT : Request for Certificate of Correction for Appl. No.: 10/410762 Patent No.: 7,071,162

Please respond to this request for a certificate of correction within 7 days.

Please review the requested changes/corrections as shown in the **COCIN** document(s) in the IFW application image. No new matter should be introduced, nor should the scope or meaning of the claims be changed.

Please complete the response (see below) and forward the completed response to scanning using document code **COCX**.

Magdalene Talley

Certificates of Correction Branch

703-308-9390 ext. 116

Thank You For Your Assistance

The request for issuing the above-identified correction(s) is hereby:

Note your decision on the appropriate box.

- ☑ **Approved** — All changes apply.
- ☐ **Approved in Part** — Specify below which changes **do not** apply.
- ☐ **Denied** — State the reasons for denial below.

Comments: _____

RAM R. SHUKLA, PH.D.
SUPERVISORY PATENT EXAMINER
SPE

1631
Art Unit

SPE RESPONSE FOR CERTIFICATE OF CORRECTION

Paper No.: _____

DATE : August 18, 2006

TO SPE OF : ART UNIT 1631

SUBJECT : Request for Certificate of Correction for Appl. No.: 10/410762 Patent No.: 7,071,162

Please respond to this request for a certificate of correction within 7 days.

Please review the requested changes/corrections as shown in the **COCIN** document(s) in the IFW application image. No new matter should be introduced, nor should the scope or meaning of the claims be changed.

Please complete the response (see below) and forward the completed response to scanning using document code **COCX**.

Magdalene Talley

Certificates of Correction Branch

703-308-9390 ext. 116

Thank You For Your Assistance

The request for issuing the above-identified correction(s) is hereby:

Note your decision on the appropriate box.

- ☒ **Approved** — All changes apply.
- ☐ **Approved in Part** — Specify below which changes **do not** apply.
- ☐ **Denied** — State the reasons for denial below.

Comments: Change in inventorship approved.

Marjorie A. Moran — SPE

1631 — Art Unit

UNITED STATES PATENT AND TRADEMARK OFFICE

Commissioner for Patents
United States Patent and Trademark Office
P.O. Box 1450
Alexandria, VA 22313-1450
www.uspto.gov

HICKMAN PALERMO TROUNG & BECKER LLP
AND APPLE INC.
2055 GATEWAY PLACE
SUITE 550
SAN JOSE, CA 95110-1089

COPY MAILED

JUL 12 2007

OFFICE OF PETITIONS

In re Application of	:	
Garst, et al.	:	
Application No. 10/410,768	:	DECISION ON PETITION
Filed: April 10, 2003	:	UNDER 37 CFR 1.78(a)(3)
Attorney Docket No. P2120USC4	:	

This is a decision on the petition under 37 CFR 1.78(a)(3), filed January 25, 2007, to accept an unintentionally delayed claim under 35 U.S.C §120 for the benefit of priority to the prior –filed non-provisional applications set forth in the amendment filed concurrently with the instant petition.

A petition for acceptance of a claim for late priority under 37 CFR 1.78(a)(3) is only applicable to those applications filed on, or after, November 29, 2000, and after the expiration of the period specified in 37 CFR 1.78(a)(2)(ii). In addition, the petition under 37 CFR 1.78(a)(3) must be accompanied by:

1. the reference required by 35 U.S.C § 120 and 37 CFR § 1.78(a)(2)(i) of the prior-filed application, unless previously submitted;

2. the surcharge set forth in § 1.17(t), and

3. a statement that the entire delay between the date the claim was due under 37 CFR 1.78(a)(2)(ii) and the date the claim was filed was unintentional. The Director may require additional information where there is a question whether the delay was unintentional.

All of the requirements being met, the petition to accept an unintentionally delayed claim for priority under 35 U.S.C. § 120 is **GRANTED**.

The granting of the petition to accept the delayed benefit claim to the prior-filed application under 37 CFR 1.78(a)(3) should not be construed as meaning that this application is entitled to the benefit of the prior-filed application. In order for the instant application to be entitled to the benefit of the prior-filed application, all other requirements under 35 U.S.C. § 120 and 37 CFR 1.78(a)(1) and (a)(2) must be met. Similarly, the fact that the corrected Filing Receipt accompanying this decision on petition includes the prior-filed application should not be construed as meaning that applicant is entitled to the claim for benefit of priority to the prior-filed application noted thereon.

Accordingly, the examiner will, in due course, consider this benefit claim and determine whether the instant application is entitled to the benefit of the earlier filing date.

A corrected Filing Receipt, which includes the priority claim to the prior-filed applications, accompanies this decision on petition.

Any inquiries concerning this decision may be directed to Kenya A. McLaughlin, Petitions Attorney, at (571) 272-3222. All other inquiries concerning either the examination procedures or status of the application should be directed to the Technology Center.

This matter is being referred to Technology Center 2100, Art Unit 2188 for appropriate action on the Request for Continued Examination and amendment filed January 25, 2007, including consideration by the examiner of applicant's entitlement to claim benefit of priority under 35 U.S.C. §120 to the prior-filed non-provisional applications.

Charles Pearson
Director
Office of Petitions

Enclosure: Corrected Filing Receipt

UNITED STATES PATENT AND TRADEMARK OFFICE

UNITED STATES DEPARTMENT OF COMMERCE
United States Patent and Trademark Office
Address: COMMISSIONER FOR PATENTS
P.O. Box 1450
Alexandria, Virginia 22313-1450
www.uspto.gov

THE PROCTER & GAMBLE COMPANY
Global Legal Department - IP
Sycamore Building - 4th Floor
299 East Sixth Street
CINCINNATI, OH 45202

Mail Date: 04/21/2010

Applicant	: Gary Dean LaVon	: DECISION ON REQUEST FOR
Patent Number	: 7601145	: RECALCULATION of PATENT
Issue Date	: 10/13/2009	: TERM ADJUSTMENT IN VIEW
Appliction No	: 10/410,783	: OF WYETH AND NOTICE OF INTENT TO
Filed	: 04/09/2003	: ISSUE CERTIFICATE OF CORRECTION
		:

The Request for Recalculation is **GRANTED** to the extent indicated.

The patent term adjustment has been determined to be **491** days. The USPTO will *sua sponte* issue a certificate of correction reflecting the amount of PTA days determined by the recalculation.

Prior to the issuance of the certificate of correction, the USPTO will afford patentee an opportunity to be heard and request reconsideration. Accordingly, patentee has **one month or thirty (30) days**, whichever is longer, to file a request for reconsideration of this patent term adjustment calculation. See 35 U.S.C. 154(b)(3)(B)(ii) and 37 CFR 1.322(a)(4). No extensions of time will be granted under 37 CFR 1.136.

Patentee should use document code PET.OP if electronically filing a request for reconsideration of this patent term adjustment calculation. The patentee must also include the information required by 37 CFR 1.705(b)(2) and the fee required by 37 CFR 1.18(e). If patentee does not file a timely request for reconsideration of this patent term adjustment calculation including the information required by 37 CFR 1.705(b)(2) and the fee required by 37 CFR 1.18(e), the USPTO will issue a certificate of correction reflecting the PTA determination noted above.

Patentee should be aware that in order to preserve the right to review in the United States District Court for the District of Columbia of the USPTO patent term adjustment determination, patentee must ensure that he or she also take the steps required under 35 U.S.C. 154(b)(4)(A) in a timely manner. Nothing in the request for recalculation should be construed as providing an alternative time frame for commencing a civil action under 35 U.S.C. 154(b)(4)(A).

Any questions concerning this decision should be directed to the Office of Patent Legal Administration at 571-272-7702.

UNITED STATES PATENT AND TRADEMARK OFFICE

COMMISSIONER FOR PATENT
UNITED STATES PATENT AND TRADEMARK OFFIC
P.O. BOX 1450
ALEXANDRIA, VA 22313-1450
WWW.USPTO.GO

Paper No. 5

MCGLEW & TUTTLE PC
SCARBOROUGH STATION
SCARBOROUGH, NY 10510

COPY MAILED

JUN 2 7 2003

OFFICE OF PETITIONS

In re Application of
Nakamura Kazuo
Application No. 10/410,804
Filed: April 10, 2003
Attorney Docket No. 70920

NOTICE

This is a notice regarding your request for acceptance of a fee deficiency submission under 37 CFR 1.28. On September 1, 1998, the Court of Appeals for the Federal Circuit held that 37 CFR 1.28(c) is the sole provision governing the time for correction of the erroneous payment of the issue fee as a small entity. **See DH Technology v. Synergystex International, Inc. 154 F.3d 1333, 47 USPQ2d 1865 (Fed. Cir. Sept. 1, 1998).**

The Office no longer investigates or rejects original or reissue applications under 37 CFR 1.56. **1098 Off. Gaz. Pat. Office 502 (January 3, 1989)**. Therefore, nothing in this Notice is intended to imply that an investigation was done.

Your fee deficiency submission under 37 CFR 1.28 is hereby **ACCEPTED**.

Inquiries related to this communication should be directed to the Office of Petitions Staff at (703) 305-9285.

This file is being forwarded to Technology Center 1700.

Irvin Dingle
Petitions Examiner
Office of Petitions
Office of the Deputy Commissioner
for Patent Examination Policy

UNITED STATES PATENT AND TRADEMARK OFFICE

Commissioner for Patents
United States Patent and Trademark Office
P.O. Box 1450
Alexandria, VA 22313-1450
www.uspto.gov

Wen-Chang Wu
235 Chung-Ho
Box 8-24
Taipei TW TAIWAN

COPY MAILED

OCT 2 5 2005

OFFICE OF PETITIONS

In re Application of	:	
Wen-Chang Wu	:	
Application No. 10/410,816	:	ON PETITION
Filed: April 11, 2003	:	
Attorney Docket No. AP3021-GVF2BA78	:	

This is a decision on the petition under 37 CFR 1.137(b), filed September 26, 2005, to revive the above-identified application.

The petition is **GRANTED**.

The above-identified application became abandoned for failure to submit the issue fee in a timely manner in reply to the Notice of Allowance mailed July 1, 2004, which set a statutory period for reply of three (3) months. Accordingly, by operation of law, the above-identified application became abandoned on October 2, 2004.

The petition satisfies the conditions for revival pursuant to the provisions of 37 CFR 1.137(b) in that (1) the reply in the form of payment of the Issue Fee; (2) the petition fee of $750; and (3) the required statement of unintentional delay have been received. Accordingly, the Issue Fee payment is accepted as having been unintentionally delayed.

Telephone inquiries concerning this decision should be directed to David A. Bucci at (571) 272-7099 or in his absence, the undersigned at (571) 272-3217.

The application file is being referred to the Office of Patent Publication.

Brian Hearn
Petitions Examiner
Office of Petitions

UNITED STATES PATENT AND TRADEMARK OFFICE

Commissioner for Patents
United States Patent and Trademark Office
P.O. Box 1450
Alexandria, VA 22313-1450
www.uspto.gov

VEDDER PRICE KAUFMAN & KAMMHOLZ
222 N. LASALLE STREET
CHICAGO, IL 60601

COPY MAILED

NOV 0 9 2007

OFFICE OF PETITIONS

In re Patent No. 7,123,687	:	DECISION ON REQUEST
Colbeth, et al.	:	FOR RECONSIDERATION OF
Issue Date: October 17, 2006	:	PATENT TERM ADJUSTMENT
Application No. 10/410,819	:	and
Filed: April 10, 2003	:	NOTICE OF INTENT TO ISSUE
Attorney Docket No. 95-057-US (V0101.06)		CERTIFICATE OF CORRECTION

This is a decision on the "Petition to Correct Patent Term Adjustment" first filed September 15, 2006, and in duplicate on July 13, 2007, requesting that the Office reconsider the determination of Patent Term Adjustment (PTA) that accompanied the Notice of Allowance. Applicants request that the initial determination of patent term adjustment be corrected from thirty-seven (37) days to one hundred seventy-six (176) days.

The request for reconsideration of the patent term adjustment under 37 CFR 1.705(b) is **GRANTED to the extent indicated herein**.

Applicants are given **TWO (2) MONTHS** from the mailing date of this decision to respond. No extensions of time will be granted under § 1.136.

Prior to a decision being rendered, the above-identified application matured into a patent. Accordingly, the patent term adjustment indicated in the patent is to be corrected by issuance of a certificate of correction showing a revised Patent Term Adjustment of one hundred forty-six **(146)** days.

BACKGROUND

On June 16, 2006, the Office mailed a Determination of Patent Term Adjustment under 35 U.S.C. § 154(b) in the above-identified application. Applicants were advised that the patent term adjustment to date was 37 days.

In response, on September 15, 2006, applicants timely[1] filed the instant request for reconsideration of the patent term adjustment (PTA) with the payment of the fee set forth in 37 CFR 1.18(e). Applicants assert that the correct number of days of PTA is 176 days. More specifically, Applicants maintains that:

1) the Information Disclosure Statement (IDS) filed April 12, 2005, should not be considered a supplemental reply and a delay attributable to applicant because it is essentially compliant with the spirit of 37 CFR 1.704(d) although the IDS of April 12, 2005, does not contain the specific language required by 37 CFR 1.704(d).

2) the IDS filed October 10, 2005, should, likewise, not be considered a supplemental reply and a delay attributable to Applicants because the IDS filed October 10, 2005, contained the specific language required by 37 CFR 1.704(d).

3) the supplemental response filed March 27, 2006, should not be considered delay attributable to the Applicant because the supplemental reply was specifically requested by the examiner.

The record supports a conclusion that the patent issuing from this application is not subject to a terminal disclaimer.

RELEVANT STATUTES AND REGULATIONS

37 CFR § 1.704(a) provides that:

The period of adjustment of the term of a patent under § 1.703(a) through (e) shall be reduced by a period equal to the period of time during which the applicant failed to engage in reasonable efforts to conclude prosecution (processing or examination) of the application.

37 CFR § 1.704(c)(8) provides that:

Circumstances that constitute a failure of the applicant to engage in reasonable efforts to conclude processing or examination of an application also include the following circumstances, which will result in the following reduction of the period of adjustment set forth in § 1.703 to extent that the periods are not overlapping:

(8) Submission of a supplemental reply or other paper, other than a supplemental reply or other paper expressly requested by the examiner, after a reply has been filed, in which case the period of adjustment set forth in § 1.703 shall be reduced by the number of days, if any, beginning on the day after the date the initial reply was filed and ending on the date that the supplemental reply or other such paper was filed.

[1] PALM records indicate that the issue fee payment was received on September 18, 2006.

OPINION

Applicants' argument and evidence have been considered in light of the application history. It has been determined that the initial period of adjustment was incorrect. Nonetheless, applicants' argument as summarized in item (1) above is unpersuasive. A review of the IDS as filed April 12, 2005, reveals that it did not contain a proper § 1.704(d) statement. Applicants are reminded of the specific language of 37 CFR §1.704(d)(*emphasis* added):

> A paper containing only an information disclosure statement in compliance with §§ 1.97 and 1.98 will not be considered a failure to engage in reasonable efforts to conclude prosecution (processing or examination) of the application under paragraphs (c)(6), (c)(8), (c)(9), or (c)(10) of this section if it is accompanied by a statement that *each item of information contained in the information disclosure statement was first cited in any communication from a foreign patent office in a counterpart application and that this communication was not received by any individual designated in § 1.56(c) more than thirty days prior to the filing of the information disclosure statement.* This thirty-day period is not extendable.

The rules make clear that the only exception to entry of a reduction for filing an IDS under circumstances that otherwise constitute a failure to engage in reasonable efforts to conclude prosecution is compliance with § 1.704(d). To ensure that a period of reduction would not be entered for filing the IDS, applicants could have filed the IDS within the period set forth in § 1.704(d) and included the § 1.704(d) statement. The 42 days of delay attributable to applicant resulting from the IDS filed April 12, 2005, will stand.

Applicants may provide the required § 1.704(d) statement on request for reconsideration and request removal of the period of reduction.

Applicants argument, as summarized in item (2) above, is persuasive. A review of the IDS filed October 5, 2005, reveals that the IDS did contain a proper § 1.704(d) statement. Accordingly, the IDS filed October 5, 2005, is not considered delay attributable to the Applicants. The period attributable to applicant delay is decreased by 56 days.

Applicants argument, as summarized in item (3) above, is persuasive. A review of the supplemental response filed March 27, 2006, and Interview Summary provided with petition reveals that the examiner requested the supplemental response. Accordingly, the filing of the supplemental response of March 27, 2006, is not considered delay attributable to the Applicants. The period attributable to applicant delay is decreased by 41 days.

Applicant's concern regarding the effect on the PTA calculation of the as yet untreated petition under 37 CFR 1.137(f) filed March 29, 2004 is noted. It is determined, however, that this has no bearing on the calculation of the PTA. A decision on the petition under 37 CFR 1.137(f) is forthcoming under separate cover.

CONCLUSION

In view thereof, the petition is GRANTED.

The days attributable to applicant delay are reduced to 44 days. The total PTA is 146 days.

The Office acknowledges submission of the $200.00 fee set forth in 37 CFR 1.18(e). No additional fees are required.

The application file is being forwarded to the Certificates of Correction Branch for issuance of a certificate of correction in order to rectify this error. The Office will issue a certificate of correction indicating that the term of the above-identified patent is extended or adjusted by one hundred forty-six **(146)** days.

Telephone inquiries regarding this matter should be directed to Kenya A. McLaughlin, Petitions Attorney, at (571) 272-3222.

Nancy Johnson/KAM

Nancy Johnson
Senior Petitions Attorney
Office of Petitions

Enclosure: Copy of DRAFT Certificate of Correction

UNITED STATES PATENT AND TRADEMARK OFFICE

CERTIFICATE OF CORRECTION

PATENT : 7,123,687 B2

DATED : October 17, 2006

INVENTOR(S) : Colbeth et al.

DRAFT

It is certified that error appears in the above-identified patent and that said Letters Patent is hereby corrected as shown below:

On the cover page,

[*] Notice: Subject to any disclaimer, the term of this patent is extended or adjusted under 35 USC 154(b) by (49) days

Delete the phrase "by 49" and insert – by 146 days--

UNITED STATES PATENT AND TRADEMARK OFFICE

Commissioner for Patents
United States Patent and Trademark Office
P.O. Box 1450
Alexandria, VA 22313-1450
www.uspto.gov

NOTARO & MICHALOS P.C.
SUITE 110
100 DUTCH HILL ROAD
ORANGEBURG, NY 10962-2100

MAILED

SEP 30 2009

OFFICE OF PETITIONS

NOTICE

In re Patent No. 7,002,152 :
Issue Date: February 21, 2006 :
Application No. 10/410,828 :
Filed: April 10, 2003 :
Attorney Docket No. JA23-016 US :

This is a notice regarding your request for acceptance of a fee deficiency submission under 37 CFR 1.28. On September 1, 1998, the Court of Appeals for the Federal Circuit held that 37 CFR 1.28(c) is the sole provision governing the time for correction of the erroneous payment of the issue fee as a small entity. **See DH Technology v. Synergystex International, Inc. 154 F.3d 1333, 47 USPQ2d 1865 (Fed. Cir. Sept. 1, 1998).**

The Office no longer investigates or rejects original or reissue applications under 37 CFR 1.56. **1098 Off. Gaz. Pat. Office 502 (January 3, 1989)**. Therefore, nothing in this Notice is intended to imply that an investigation was done.

Your fee deficiency submission under 37 CFR 1.28 is hereby **NOT ACCEPTED**.

The fee deficiency cannot be accepted because no itemization has been submitted, as required by 37 CFR 1.28(C) (ii) which states:

(2) Payment of deficiency owed. The deficiency owed, resulting from the previous erroneous payment of small entity fees, must be paid.

(ii) *Itemization of the deficiency payment.* An itemization of the total deficiency payment is required. The itemization must include the following information:

(A) Each particular type of fee that was erroneously paid as a small entity, (e.g., basic statutory filing fee, two-month extension of time fee) along with the current fee amount for non-small entity;

(B) The small entity fee actually paid, and when. This will permit the Office to differentiate, for example, between two one-month extension of time fees erroneously paid as a small entity but on different dates;

(C) The deficiency owed amount (for each fee erroneously paid); and

(D) The total deficiency payment owed, which is the sum or total of the individual deficiency owed amounts set forth in paragraph (c)(2)(ii)(C) of this section.

Inquiries related to this communication should be directed to Diane Goodwyn at (571) 272-6735.

Thurman K. Page
Petitions Examiner
Office of Petitions

UNITED STATES PATENT AND TRADEMARK OFFICE

UNITED STATES DEPARTMENT OF COMMERCE
United States Patent and Trademark Office
Address: COMMISSIONER FOR PATENTS
P.O. Box 1450
Alexandria, Virginia 22313-1450
www.uspto.gov

APPL NO.	FILING OR 371 (c) DATE	ART UNIT	FIL FEE REC'D	ATTY.DOCKET NO	DRAWINGS	TOT CLMS	IND CLMS
10/410,834	04/09/2003	1753	375	2182C/DIV	2	4	2

CONFIRMATION NO. 3164

CORRECTED FILING RECEIPT

OC000000011594934

25871
SWANSON & BRATSCHUN L.L.C.
1745 SHEA CENTER DRIVE
SUITE 330
HIGHLANDS RANCH, CO 80129

Date Mailed: 12/31/2003

Receipt is acknowledged of this regular Patent Application. It will be considered in its order and you will be notified as to the results of the examination. Be sure to provide the U.S. APPLICATION NUMBER, FILING DATE, NAME OF APPLICANT, and TITLE OF INVENTION when inquiring about this application. Fees transmitted by check or draft are subject to collection. Please verify the accuracy of the data presented on this receipt. **If an error is noted on this Filing Receipt, please write to the Office of Initial Patent Examination's Filing Receipt Corrections, facsimile number 703-746-9195. Please provide a copy of this Filing Receipt with the changes noted thereon. If you received a "Notice to File Missing Parts" for this application, please submit any corrections to this Filing Receipt with your reply to the Notice. When the USPTO processes the reply to the Notice, the USPTO will generate another Filing Receipt incorporating the requested corrections (if appropriate).**

Applicant(s)

Michael J. Natan, Los Altos, CA;
Thomas E. Mallouk, State College, PA;
Benjamin R. Martin, State College, PA;
Brian D. Reiss, State College, PA;
Louis J. Dietz, Mountain View, CA;
James L. Winkler, Sunnyvale, CA;

Assignment For Published Patent Application

NANOPLEX, TECHNOLOGIES;

Domestic Priority data as claimed by applicant

This application is a DIV of 09/677,203 10/02/2000
which is a CIP of 09/598,395 06/20/2000
which claims benefit of 60/157,326 10/01/1999
and claims benefit of 60/189,151 03/14/2000
and claims benefit of 60/190,247 03/17/2000
and claims benefit of 60/194,616 04/05/2000
and said 09/677,203 10/02/2000
claims benefit of 60/212,167 06/16/2000

Foreign Applications

If Required, Foreign Filing License Granted: 08/07/2003

Projected Publication Date: Not Applicable

Non-Publication Request: No

Early Publication Request: No

**** SMALL ENTITY ****

Title

Method and apparatus for manufacturing colloidal rod particles

Preliminary Class

205

LICENSE FOR FOREIGN FILING UNDER
Title 35, United States Code, Section 184
Title 37, Code of Federal Regulations, 5.11 & 5.15

GRANTED

The applicant has been granted a license under 35 U.S.C. 184, if the phrase "IF REQUIRED, FOREIGN FILING LICENSE GRANTED" followed by a date appears on this form. Such licenses are issued in all applications where the conditions for issuance of a license have been met, regardless of whether or not a license may be required as set forth in 37 CFR 5.15. The scope and limitations of this license are set forth in 37 CFR 5.15(a) unless an earlier license has been issued under 37 CFR 5.15(b). The license is subject to revocation upon written notification. The date indicated is the effective date of the license, unless an earlier license of similar scope has been granted under 37 CFR 5.13 or 5.14.

This license is to be retained by the licensee and may be used at any time on or after the effective date thereof unless it is revoked. This license is automatically transferred to any related applications(s) filed under 37 CFR 1.53(d). This license is not retroactive.

The grant of a license does not in any way lessen the responsibility of a licensee for the security of the subject matter as imposed by any Government contract or the provisions of existing laws relating to espionage and the national security or the export of technical data. Licensees should apprise themselves of current regulations especially with respect to certain countries, of other agencies, particularly the Office of Defense Trade Controls, Department of State (with respect to Arms, Munitions and Implements of War (22 CFR 121-128)); the Office of Export Administration, Department of Commerce (15 CFR 370.10 (j)); the Office of Foreign Assets Control, Department of Treasury (31 CFR Parts 500+) and the Department of Energy.

NOT GRANTED

No license under 35 U.S.C. 184 has been granted at this time, if the phrase "IF REQUIRED, FOREIGN FILING LICENSE GRANTED" DOES NOT appear on this form. Applicant may still petition for a license under 37 CFR 5.12, if a license is desired before the expiration of 6 months from the filing date of the application. If 6 months has lapsed from the filing date of this application and the licensee has not received any indication of a secrecy order under 35 U.S.C. 181, the licensee may foreign file the application pursuant to 37 CFR 5.15(b).

UNITED STATES
PATENT AND
TRADEMARK OFFICE

Commissioner for Patents
Washington, DC 20231
www.uspto.gov

9/24/03

Law Office of William B Ritchie
43 Jackson Street
Concord NH 03301

Dear Applicant:

The Box PGPub replacement drawings for application number 10/410,836 received on 8/18/03 by the U. S. Patent and Trademark Office will be included for patent publication.

Telephone inquiries should be directed to Customer Service, Office of Initial Patent Examination, at 703-308-1202.

UNITED STATES
PATENT AND
TRADEMARK OFFICE

Commissioner for Patents
Washington, DC 20231
www.uspto.gov

Signature of Reviewer, Office of Initial Patent Examination

SPE RESPONSE FOR CERTIFICATE OF CORRECTION

Paper No.:20100203

DATE : February 03, 2010

TO SPE OF : ART UNIT 2164

SUBJECT : Request for Certificate of Correction on Patent No.: 6,931,406

A response is requested with respect to the accompanying request for a certificate of correction.

Please complete this form and return with file, within **7** days to:
Certificates of Correction Branch - ST (South Tower) 9A22
Palm location **7590** - Tel. No. (703) 305-8309

With respect to the change(s) requested, correcting Office and/or Applicant's errors, should the patent read as shown in the certificate of correction? No new matter should be introduced, nor should the scope or meaning of the claims be changed.

Thank You For Your Assistance **Certificates of Correction Branch**

The request for issuing the above-identified correction(s) is hereby:

Note your decision on the appropriated box.

☒ **Approved** All changes apply.

☐ **Approved in Part** Specify below which changes **do not** apply.

☐ **Denied** State the reasons for denial below.

Comments:

The request to add inventors is approved. In addition to the current inventor "Michael Stern", please add inventors:

William L. Mince

Daniel E. Kyte

as stated in the Request to Correct Inventorship.

/CHARLES RONES/
Supervisory Patent Examiner.Art Unit 2164

UNITED STATES PATENT AND TRADEMARK OFFICE

Commissioner for Patents
United States Patent and Trademark Office
P.O. Box 1450
Alexandria, VA 22313-1450
www.uspto.gov

MARGER JOHNSON & MCCOLLOM, P.C.
210 SW MORRISON STREET, SUITE 400
PORTLAND OR 97204

COPY MAILED

DEC 19 2007

OFFICE OF PETITIONS

In re Application of	:	
Perry J. Gilmour	:	
Application No. 10/410,864	:	DECISION ON PETITION
Filed: April 9, 2003	:	
Attorney Docket No. 1305-1	:	

This is a decision on the petition under 37 CFR 1.137(b), filed June 22, 2007, to revive the above-identified application.

The petition is **DISMISSED**.

Any request for reconsideration of this decision must be submitted within TWO (2) MONTHS from the mail date of this decision. Extensions of time under 37 CFR 1.136(a) are permitted. The reconsideration request should include a cover letter entitled "Renewed Petition under 37 CFR 1.137(b)." This is **not** a final agency action within the meaning of 5 U.S.C. § 704.

This application became abandoned as a result of petitioner's failure to file an appeal brief (and fee required by 37 CFR 41.20(b)(2)) within the time period provided in 37 CFR 41.37(a)(1). As an appeal brief (and appeal brief fee) was not filed within two (2) months of the Notice of Appeal filed October 18, 2006, and no extensions of time under the provisions of 37 CFR 1.136(a) were obtained, the appeal was dismissed and the proceedings as to the rejected claims were terminated. See 37 CFR 1.197(b). As no claim was allowed, the application became abandoned on December 19, 2006. *See* MPEP 1215.04.

A grantable petition under 37 CFR 1.137(b) must be accompanied by: (1) the required reply, unless previously filed; (2) the petition fee as set forth in 37 CFR 1.17(m); (3) a statement that the entire delay in filing the required reply from the due date for the reply until the filing of a grantable petition pursuant to 37 CFR 1.137(b) was unintentional; and (4) any terminal disclaimer (and fee as set forth in 37 CFR 1.20(d)) required by

37 CFR 1.137(d). Where there is a question as to whether either the abandonment or the delay in filing a petition under 37 CFR 1.137 was unintentional, the Director may require additional information. *See* MPEP 711.03(c)(II)(C) and (D).

The instant petition lacks item (3). In this regard, the statement of unintentional delay cannot be accepted since the statement was not submitted by a party involved with the prosecution of this application at the time of abandonment. The statement of unintentional delay is by counsel who applicant is seeking to now appoint. Counsel does not assert that he has firsthand knowledge of the circumstances surrounding the abandonment of this application, especially after the assignee of record (Aho Construction ("Aho")) had previously intervened to the exclusion of the named inventor and became of record in this application, as permitted by 37 CFR 3.73(b) and MPEP 324. Any renewed petition must have the statement made by a party having firsthand knowledge of the circumstances surrounding the delay that led to the abandonment of this application. See "Notice of Final Rulemaking," 62 F.R. 53132 at 53160 (Oct 10, 1997)(reply to query no. 64).

Accordingly, any renewed petition must also clearly identify the party(s) having the right to reply to avoid abandonment on December 18, 2006. That party(s), in turn, must explain what effort(s) was made to file the appeal brief or take other action to maintain pendency of this application and, further, why no action was taken. If no effort was made to take the appropriate action to maintain pendency of this application, then that party must explain why the delay in this application does not result from a deliberate course of action (or inaction). Likewise, the firm of Marger Johnson & McCollom, P.C. ("MJM") should explain what action it took to prepare the appeal brief or any other reply to maintain pendency of this application. Copies of any correspondence and internal and external memoranda relating to the filing, or to not filing an appeal brief or other reply, are required from the responsible person(s), counsel at MJM and whoever else was involved with this application at the time of abandonment.

The question under 37 CFR 1.137(b) is whether the delay on the part of the party having the right or authority to take action in this application to avoid abandonment was unintentional. When the issue of revival is addressed, the focus must be on the rights of the parties as of the time of abandonment. See Kim v. Quigg, 781 F. Supp. 1280, 1284, 12 USPQ2d 1604, 1607 (E.D. Va

1989). Clearly, Aho was the party having the right to reply or not reply. Aho apparently determined that there was no compelling reason to take action following the filing of the Notice of Appeal on October 18, 2006. An assignment of the entire right, title, and interest, passes both legal and equitable title. See Wende v. Horine, 191 F. 620, 621 (C.C.N.D. Ill. 1911). The named inventor, as the assignor of his entire interest, could not insist that the application be prosecuted by Aho; Aho as the assignee was free to deal with this application as it willed. See Garfield v. Western Electric Co., 298 F.659 (S.D.N.Y. 1924).

As the courts have made clear, it is pointless for the USPTO to revive an abandoned--much less an intentionally abandoned--application without an adequate showing that the delay did not result from a deliberate course of action. See In re Maldague, 10 USPQ2d 1477 (Comm'r Pat. 1988; In re Application of G, 11 USPQ2d 1378 (Comm'r Pat. 1989); Field Hybrids, LLC v. Toyota Motor Corp., 2005 U.S. Dist. LEXIS 1159 (D. Minn Jan. 27, 2005); New York University v. Autodesk, 466 F. Supp.2d 563, 2006 U.S. Dist. LEXIS 93105, (S.D.N.Y. 2006)(same); Lumenyte Int'l Corp. v. Cable Lite Corp., Nos. 96-1011, 96-1077, 1996 U.S. App. LEXIS 16400, 1996 WL 383927 (Fed. Cir. July 9,1996) (unpublished) (patent held unenforceable due to a finding of inequitable conduct in submitting an inappropriate statement that the abandonment was unintentional); Aristocrat Technologies v. International Game Technology, 2007 U.S. Dist. LEXIS 42854 (N.D. CA 2007)(USPTO misapplication of the standards of revival overturned causing patent invalidation).

This application apparently became abandoned due to the assignee's deliberate intent. What the inventor would have done had it known of the failure of assignee to take appropriate action to maintain pendency of this application following the October 18, 2006 filing of the Notice of Appeal, or what the inventor intended is, in any event, immaterial to, and cannot change the nature of, the delay in this case.

Further, the inventor, or any other possible successor in title to the previous assignee is bound by any intentional delay arising from that party. See Winkler v. Ladd, 221 F.Supp 550, 552, 138 USPQ 666, 668 (D.D.C. 1963); Kim v. Quigg, supra. The named inventor has not recorded any subsequent conveyance of title from Aho to him or any other party; as such, it appears that Aho is and remains the assignee of the entire interest. Since Aho has intervened to the exclusion of the inventor, the named inventor is at best a third party to this application, and,

for that reason, the concurrently filed power of attorney cannot be processed.

A courtesy copy of this decision is being mailed to counsel who filed the instant petition.

Further correspondence with respect to this matter should be addressed as follows:

By Mail: Mail Stop PETITION
Commissioner for Patents
P. O. Box 1450
Alexandria, VA 22313-1450

By hand: U. S. Patent and Trademark Office
Customer Service Window, Mail Stop Petitions
Randolph Building
401 Dulany Street
Alexandria, VA 22314

The centralized facsimile number is **(571) 273-8300.**

Correspondence regarding this decision may also be filed through the electronic filing system of the USPTO.

Telephone inquiries concerning this decision should be directed to the undersigned at (571) 272-3218 or to the Office of Petitions Help Desk at (571) 272-3282 after January 3, 2008.

Frances Hicks
Petition Examiner
Office of Petitions

cc:

Rylander & Associates PC
406 West 12th Street
Vancouver, WA 98660

UNITED STATES PATENT AND TRADEMARK OFFICE

Commissioner for Patents
United States Patent and Trademark Office
P.O. Box 1450
Alexandria, VA 22313-1450
www.uspto.gov

RYLANDER & ASSOCIATES PC
406 WEST 12TH STREET
VANCOUVER WA 98660

COPY MAILED

JUN 0 9 2008

In re Application of :
Perry J. Gilmour :
Application No. 10/410,864 : ON PETITION
Filed: April 9, 2003 :
Attorney Docket No. 1305-2 :

This is a decision on the renewed petition under the unintentional provisions of 37 CFR 1.137(b), filed April 24, 2008, to revive the above-identified application.

The petition is **DISMISSED**.

Any request for reconsideration of this decision must be submitted within TWO (2) MONTHS from the mail date of this decision. Extensions of time under 37 CFR 1.136(a) are permitted. The reconsideration request should include a cover letter entitled "Renewed Petition under 37 CFR 1.137(b)." This is **not** a final agency action within the meaning of 5 U.S.C. § 704.

The application became abandoned for failure to file an appeal brief within the time period provided in 37 CFR 41.37 (a)(1). As an appeal brief was not filed within two (2) months of the Notice of Appeal filed October 18, 2006, and no extensions of time under 37 CFR1.136(a) were obtained, the appeal was dismissed and the proceedings as to the rejected claimers were terminated. As no claim was allowed the application became abandoned December 19, 2006.

A grantable petition under 37 CFR 1.137(b) must be accompanied by: (1) the required reply, unless previously filed; (2) the petition fee as set forth in 37 CFR 1.17(m); (3) a statement that the entire delay in filing the required reply from the due date for the reply until the filing of a grantable petition pursuant to 37 CFR 1.137(b) was unintentional; and (4) any terminal disclaimer (and fee as set forth in 37 CFR 1.20(d)) required by 37 CFR 1.137(d). Where there is a question as to whether either the abandonment or the delay in filing a petition under 37 CFR 1.137 was unintentional, the Director may require additional information. See MPEP 711.03(c)(II)(C) and (D). The instant petition lacks item 3.

The Petition Decision mailed December 19, 2007 dismissed the petition filed June 22, 2007 for failure to provide item (3), a statement of unintentional delay.

The showing of record raises questions as to whether the abandonment of this application was unintentional within the meaning of 35 USC 41(a)(7) and CFR 1.137(b).

Where the applicant deliberately permits an application to become abandoned (e.g., due to a conclusion that the claims are unpatentable, that a rejection in an Office action cannot be overcome, or that the invention lacks sufficient commercial value to justify continued prosecution), the abandonment of such application is considered to be a deliberately chosen course of action, and the resulting delay cannot be considered as "unintentional" within the meaning of 37 CFR 1.137(b). See *In re Application of G*, 1 USPQ2d 1378, 1380 (Comm'r Pat. 1989). An intentional course of action is not rendered unintentional when, upon reconsideration, the applicant changes his or her mind as to the course of action that should have been taken. See *In re Maldague*, 10 USPQ2d 1477, 1478 (Comm'r Pat. 1988.

The renewed petition includes declarations from Jerome Marger the attorney of record at the time of abandonment, Jon Suomala who was the authorized agent for Aho Construction Inc. (the assignee) and was the primary contact with the patent attorney, and Melvin Aho who was the President of Aho Construction Inc. These three declarations make it clear that Marger and Suomala were in contact with each other from November, 2006 through early May of 2007. The declarations of Suomala and Aho suggest they did not understand what was required to avoid abandonment after the filing of the Notice of Appeal. However, all three declarations agree that Marger contacted Suomala on May 9, 2007 via email (copy included with the petition) and clearly stated "Note that the Appeal Brief, if any, is due on or before May 18, 2007." It is not clear from the record why Suomala or Aho did not respond to this email. If they were confused or not sure of what was expected why did they not contact Marger for clarification of his email? As the attorney prosecuting the application at that time, why did Marger make no further effort to contact Suomala as the response date of May 18, 2007 arrived? Marger's declaration indicates that Suomala's request to Marger for a detailed billing summary on April 26, 2007 led Marger to believe that, absent a response to his May 9, 2007 email, that assignee had decided to not proceed with the appeal due to financial considerations. Why would Marger make such an assumption without trying to confirm the matter?

The record suggests that Marger deliberately permitted the application to go abandoned. He made an assumption based on the facts at hand and purposely did not file an appeal brief knowing that such action would lead to abandonment of the application. Petitioner has not established that the failure to file an appeal brief was unintentional.

Further correspondence with respect to this matter should be addressed as follows:

By Mail: Mail Stop PETITION
Commissioner for Patents
P. O. Box 1450
Alexandria, VA 22313-1450

By hand: U. S. Patent and Trademark Office

Customer Service Window, Mail Stop Petitions
Randolph Building
401 Dulany Street
Alexandria, VA 22314

The centralized facsimile number is **(571) 273-8300.**

Telephone inquiries concerning this decision should be directed to Carl Friedman at (571) 272-6842.

Carl Friedman
Petitions Examiner
Office of Petitions

UNITED STATES PATENT AND TRADEMARK OFFICE

Commissioner for Patents
United States Patent and Trademark Office
P.O. Box 1450
Alexandria, VA 22313-1450
www.uspto.gov
DIV 10-04

MORRIS MANNING & MARTIN LLP
1600 ATLANTA FINANCIAL CENTER
3343 PEACHTREE ROAD, NE
ATLANTA GA 30326-1044

COPY MAILED

OCT 0 5 2004

OFFICE OF PETITIONS

In re Application of	:
Carlson et al.	:
Application No. 10/410,878	: DECISION NOTING JOINDER OF
Filed: 9 April, 2003	: INVENTOR AND PETITION UNDER
Attorney Docket No. 8145-40936	: 37 CFR 1.47(a) MOOT

Papers filed on 20 October, 2003, subsequent to the filing of a Petition Under 37 CFR 1.47(a), on 11 August, 2003, included a Declaration signed by the previously non-signing inventor, Freeman Rufus, Jr., in compliance with 37 CFR 1.63.

In view of the joinder of the inventor, further consideration under 37 CFR 1.47(a) is moot; this application does not have any rule 1.47(a) status and no such status should appear on the file wrapper. This application need not be returned to this office for any further consideration under 37 CFR 1.47(a).

This application will be forwarded to Office of Initial Patent Examination for further processing.

Since joinder occurred prior to consideration of the petition under 37 CFR 1.47(a), the petition fee of $130.00 is unnecessary and will be refunded to petitioners by Treasury Check.

Telephone inquiries related to this decision should be directed to the undersigned at (571)272-3231.

Douglas I. Wood
Petitions Attorney
Office of Petitions

UNITED STATES PATENT AND TRADEMARK OFFICE

Commissioner for Patents
United States Patent and Trademark Office
P.O. Box 1450
Alexandria, VA 22313-1450
www.uspto.gov

PEARNE & GORDON LLP
1801 EAST 9TH STREET
SUITE 1200
CLEVELAND OH 44114-3108

MAILED

MAY 26 2010

OFFICE OF PETITIONS

In re Patent No. 6,890,602	:	
Issue Date: May 10, 2005	:	
Application No. 10/410,880	:	ON PETITION
Filed: April 10, 2003	:	
Attorney Docket No. BUG-46514	:	

This is a notice regarding your request for acceptance of a fee deficiency submission under 37 CFR 1.28. On September 1, 1998, the Court of Appeals for the Federal Circuit held that 37 CFR 1.28(c) is the sole provision governing the time for correction of the erroneous payment of the issue fee as a small entity. **See DH Technology v. Synergystex International, Inc. 154 F.3d 1333, 47 USPQ2d 1865 (Fed. Cir. Sept. 1, 1998).**

The Office no longer investigates or rejects original or reissue applications under 37 CFR 1.56. **1098 Off. Gaz. Pat. Office 502 (January 3, 1989)**. Therefore, nothing in this Notice is intended to imply that an investigation was done.

Your fee deficiency submission under 37 CFR 1.28 is hereby **ACCEPTED**.

This patent is no longer entitled to small entity status. Accordingly, all future fees paid in this patent must be paid at the large entity rate.

Telephone inquiries concerning this decision should be directed to the undersigned at (571) 272-7751.

Joan Olszewski

Joan Olszewski
Petitions Examiner
Office of Petitions

UNITED STATES PATENT AND TRADEMARK OFFICE

UNITED STATES DEPARTMENT OF COMMERCE
United States Patent and Trademark Office
Address: COMMISSIONER FOR PATENTS
P.O. Box 1450
Alexandria, Virginia 22313-1450
www.uspto.gov

Ware, Fressola
Van Der Sluys & Adolphson LLP
755 Main Street
P.O. Box 224
Monroe, CT 06468

Mail Date: 04/21/2010

Applicant	: Mikko Sahinoja	: DECISION ON REQUEST FOR
Patent Number	: 7590629	: RECALCULATION of PATENT
Issue Date	: 09/15/2009	: TERM ADJUSTMENT IN VIEW
Appliction No	: 10/410,881	: OF WYETH AND NOTICE OF INTENT TO
Filed	: 04/09/2003	: ISSUE CERTIFICATE OF CORRECTION
		:

The Request for Recalculation is **GRANTED** to the extent indicated.

The patent term adjustment has been determined to be **1043** days. The USPTO will *sua sponte* issue a certificate of correction reflecting the amount of PTA days determined by the recalculation.

Prior to the issuance of the certificate of correction, the USPTO will afford patentee an opportunity to be heard and request reconsideration. Accordingly, patentee has **one month or thirty (30) days**, whichever is longer, to file a request for reconsideration of this patent term adjustment calculation. See 35 U.S.C. 154(b)(3)(B)(ii) and 37 CFR 1.322(a)(4). No extensions of time will be granted under 37 CFR 1.136.

Patentee should use document code PET.OP if electronically filing a request for reconsideration of this patent term adjustment calculation. The patentee must also include the information required by 37 CFR 1.705(b)(2) and the fee required by 37 CFR 1.18(e). If patentee does not file a timely request for reconsideration of this patent term adjustment calculation including the information required by 37 CFR 1.705(b)(2) and the fee required by 37 CFR 1.18(e), the USPTO will issue a certificate of correction reflecting the PTA determination noted above.

Patentee should be aware that in order to preserve the right to review in the United States District Court for the District of Columbia of the USPTO patent term adjustment determination, patentee must ensure that he or she also take the steps required under 35 U.S.C. 154(b)(4)(A) in a timely manner. Nothing in the request for recalculation should be construed as providing an alternative time frame for commencing a civil action under 35 U.S.C. 154(b)(4)(A).

Any questions concerning this decision should be directed to the Office of Patent Legal Administration at 571-272-7702.

UNITED STATES PATENT AND TRADEMARK OFFICE

Commissioner for Patents
United States Patent and Trademark Office
P.O. Box 1450
Alexandria, VA 22313-1450
www.uspto.gov

COPY MAILED

NOV 13 2009

OFFICE OF PETITIONS

NOVO NORDISK, INC.
INTELLECTUAL PROPERTY DEPARTMENT
100 COLLEGE ROAD WEST
PRINCETON, NJ 08540

In re Patent No.: 7,179,617	:	
Issued: February 20, 2007	:	
Application No. 10/410,897	:	NOTICE
Filed: April 9, 2003	:	
Attorney Docket No. 040853-01-5058	:	

This is a notice regarding your request for acceptance of a fee deficiency submission under 37 CFR 1.28.

The Office no longer investigates or rejects original or reissue patent under 37 CFR 1.56. **1098 Off. Gaz. Pat. Office 502 (January 3, 1989)**. Therefore, nothing in this Notice is intended to imply that an investigation was done.

Your fee deficiency submission under 37 CFR 1.28 is hereby **ACCEPTED**.

This application/patent is no longer entitled to small entity status. Accordingly, all future fees paid in this patent must be paid at the large entity rate.

Inquiries related to this communication should be directed to the undersigned at (571) 272-3204.

Sherry D. Brinkley
Petitions Examiner
Office of Petitions

UNITED STATES PATENT AND TRADEMARK OFFICE

Commissioner for Patents
United States Patent and Trademark Office
P.O. Box 1450
Alexandria, VA 22313-1450
www.uspto.gov

MAR 23 2007

FISH & RICHARDSON, PC
P.O. BOX 1022
MINNEAPOLIS MN 55440-1022

In re Application of	:
Denis r. Burton et al	:
Serial No.: 10/410,907	: PETITION DECISION
Filed: April 8, 2003	:
Attorney Docket No.: 17083-005001/1229	:

This is in response to the petition under 37 CFR 1.182, filed January 12, 2007, requesting acceptance of replacement drawings.

There is no requirement for a petition when filing replacement drawings. A request to the examiner to accept replacement drawings with reasons given therefore is sufficient.

The petition is **DISMISSED** as moot.

The petition fee paid of $130.00 will be credited to applicant's Deposit Account No. 50-1213, as directed.

Should there be any questions about this decision please contact William R. Dixon, Jr., by letter addressed to Director, TC 1600, at the address listed above, or by telephone at 571-272-0519 or by facsimile sent to the general Office facsimile number 571-273-8300.

William R. Dixon, Jr.
Special Program Examiner
Technology Center 1600

UNITED STATES PATENT AND TRADEMARK OFFICE

OCT 10 2007

Commissioner for Patents
United States Patent and Trademark Office
P.O. Box 1450
Alexandria, VA 22313-1450
www.uspto.gov

Stephanie Seidman
FISH & RICHARDSON, PC
P.O. BOX 1022
MINNEAPOLIS, MN 55440-1022

In re Application of	:
Burton et al	:
Serial No.: 10/410/907	:Decision on Petition
Filed : 8 April 2003	:
Attorney Docket No.: 17083-005001/1229	:

This letter is in response to the Petition under 37 C.F.R. 1.144 filed on 23 July 2007 requesting reconsideration of the restriction requirement. The delay in acting upon this petition is regretted.

BACKGROUND

On 4 November 2005, the examiner mailed a restriction requirement in which the original claims 1-108 were divided into 10 groups. This restriction requirement further required election of a disease and polypeptide to be provisionally elected for examination.

On 24 May 2006, Applicants elected Group IV, (Claims 40-48) with traverse and the species of prior polypeptide and protein aggregation with traverse.

On 7 July 2006 the examiner considered the traversal, made the restriction requirement final and mailed to applicants a non-final Office action, rejecting claims 40-48.

On 24 May 2007 the examiner considered applicants response, and mailed to applicants a final Office action, rejecting claims 40-48.

On 23 July 2007, applicants filed this petition for reconsideration of the restriction requirement.

DISCUSSION

The petition and file history have been carefully considered. Upon review of the file history, the following error is noted in the restriction requirement.

Group II is drawn to hybrid protein comprising monohybrid protein comprising monomeric or multimeric units, classified in class 424, subclass 192.1 for example. This grouping and description is accurate for claims 7-24, 26, 28 and 94. However claims 49-60, drawn to polynucleotides, vectors and host cells, were inadvertently included in Group II. Before turning to the merits of the petition, this error in the restriction requirement will be addressed as follows;

Group II(a), claims 7-24, 26, 28 and 94, drawn to hybrid protein comprising monohybrid protein comprising monomeric or multimeric units, classified in class 424, subclass 192.1 for example.

Group II(b), claims 49-60, drawn to polynucleotides, vectors, host cells, classified in class 536, subclass 23, for example.

Inventions II(a) and II(b) are directed to related organic molecules. The related inventions are distinct if the (1) the inventions as claimed are either not capable of use together or can have a materially different design, mode of operation, function, or effect; (2) the inventions do not overlap in scope, i.e., are mutually exclusive; and (3) the inventions as claimed are not obvious variants. See MPEP § 806.05(j). In the instant case, the inventions as claimed have different designs in terms of their amino acid or nucleic acid backbone, in addition to different modes of operations and effects. Furthermore, the inventions as claimed do not encompass overlapping subject matter and there is nothing of record to show them to be obvious variants.

Restriction for examination purposes as indicated is proper because all these inventions listed in this action are independent or distinct for the reasons given above <u>and</u> there would be a serious search and examination burden if restriction were not required because one or more of the following reasons apply:

(a) the inventions have acquired a separate status in the art in view of their different classification;

(b) the inventions have acquired a separate status in the art due to their recognized divergent subject matter;

(c) the inventions require a different field of search (for example, searching different classes/subclasses or electronic resources, or employing different search queries);

(d) the prior art applicable to one invention would not likely be applicable to another invention;

(e) the inventions are likely to raise different non-prior art issues under 35 U.S.C. 101 and/or 35 U.S.C. 112, first paragraph.

Turning now to the merits of the petition, applicants have requested reconsideration of the restriction between Groups I, II, III and IV. This request will be considered to the extend that it applies to reformulated Group II(a).

A) Consideration of Independent and Distinct Inventions

35 U.S.C. 121 sets forth the appropriate means for restriction which permits, "If two or more independent and distinct inventions are claimed in one application, the Director may require the application to be restricted to one of the inventions."

MPEP 802.01 helps define the terms independent and distinct. The term "independent" (i.e., unrelated) means that there is no disclosed relationship between the two or more inventions claimed, that is, they are unconnected in design, operation, and effect. Related inventions are distinct if the inventions as claimed are not connected in at least one of design, operation, or effect (e.g., can be made by, or used in, a materially different process) and wherein at least one invention is PATENTABLE (novel and nonobvious) OVER THE OTHER (though they may each be unpatentable over the prior art).

The MPEP also provides guidance in 806.01, stating "In passing upon questions of double patenting and restriction, it is the claimed subject matter that is considered and such claimed subject matter must be compared in order to determine the question of distinctness or independence."

Finally, "Where the claims of an application define the same essential characteristics of a single disclosed embodiment of an invention, restriction there between should never be required. This is because the claims are not directed to distinct inventions; rather they are different definitions of the same disclosed subject matter, varying in breadth or scope of definition" (see MPEP 806.06).

Here, the polypeptide claims of Groups I, II(a), III and IV contain overlapping subject matter. Claims in one group overlap in scope with Claims in another group as set forth in the requirement for restriction.

For example, independent Claim 1 of Group I encompasses independent claim 40 of Group IV. In one embodiment, the hybrid polypeptide of Group II(a) encompasses a scaffold from an immunoglobulin molecule which reads upon the hybrid immunglobulin polypeptide of Group IV. Moreover, the polypeptide which specifically binds the infectious form of a prior protein (Group III) reads upon Group IV's hybrid immunoglobulin which binds a prior protein (Claim 43) with at least 10-fold higher affinity to the aggregating form over the benign form (Claim 46). Given the fact that Groups I, II(a), II and IV are not patentably distinct, Groups I, II(a), III and IV have been rejoined for examination.

B) Consideration of the Provisional Election of Species Requirement

The petition requests that Claim 1 be treated as a generic claim. It is noted that in the July 9, 2007 response, applicants have specifically amended Claim 1 to require the particulars of the elected species.

The MPEP further provides that

> "Upon the indication of allowability of the linking claim(s), the restriction requirement as to the linked inventions **shall** be withdrawn and any claim(s) depending from or otherwise requiring all the limitations of the allowable linking claim(s) will be rejoined and fully examined for patentability in accordance with 37 CFR 1.104 **Claims that require all the limitations of an allowable linking claim** will be entered as a matter of right if the amendment is presented prior to final rejection or allowance,

whichever is earlier. Amendments submitted after final rejection are governed by 37 CFR 1.116; amendments submitted after allowance are governed by 37 CFR 1.312.

Applicant(s) are advised that if any claim presented in a continuation or divisional application is anticipated by, or includes all the limitations of, the allowable linking claim, such claim may be subject to provisional statutory and/or nonstatutory double patenting rejections over the claims of the instant application. Where a restriction requirement is withdrawn, the provisions of 35 U.S.C. 121 are no longer applicable. *In re Ziegler*, 443 F.2d 1211, 1215, 170 USPQ 129, 131-32 (CCPA 1971). See also MPEP § 804.01.

MPEP 809 provides direction for linking claims. MPEP 809 specifically states "[l]inking claims and the inventions they link together are usually either all directed to products or all directed to processes (i.e., a product claim linking properly divisible product inventions, or a process claim linking properly divisible process inventions)."

In this instance, the broad scope of claim 40 appears to have been considered and rejected under Lack of Enablement and Written Description in the final office action. Thus, the generic claims that encompass the elected species are not at this time in condition for allowance. The request for rejoinder of non-elected species is premature.

DECISION

The petition is **GRANTED-IN-PART** for the reasons set forth above.

The request to withdraw the restriction requirement between Groups I, II(a), III and IV is **GRANTED**. Groups I, II(a) and III (Claims 1-39, 94 and 109) have been rejoined with elected invention of Group IV (40-48 and 109-114) for examination.

Claims 49-60, drawn to nucleic acids encoding the polypeptides, vectors and cells are now grouped in new group II(b) and will be withdrawn from examination.

The request to withdraw the provisional election of species requirement is **DISMISSED** as being premature, because no claim directed to a generic invention that encompasses plural species is in condition for allowance.

The finality of the Office action mailed 24 May 2007 has been withdrawn.

The application will be forwarded to the examiner for further action consistent with this decision and for the preparation of a new non-final action which addresses rejoined Groups I, II(a), III and IV.

Any request for reconsideration must be filed within two (2) months of the mailing date of this decision.

Should there be any questions about this decision, please contact Special Program Examiner Julie Burke, by letter addressed to Director, Technology Center 1600, at the address listed above, or by telephone at 571-272-1600 or by facsimile sent to the general Office facsimile number, 571-273-8300.

John LeGuyader
Director, Technology Center 1600

UNITED STATES PATENT AND TRADEMARK OFFICE

UNITED STATES DEPARTMENT OF COMMERCE
United States Patent and Trademark Office
Address: COMMISSIONER FOR PATENTS
P.O. Box 1450
Alexandria, Virginia 22313-1450
www.uspto.gov

APPLICATION NO.	FILING DATE	FIRST NAMED INVENTOR	ATTORNEY DOCKET NO.	CONFIRMATION NO.
10/410,907	04/08/2003	Dennis R. Burton	119362-00011 / 1229	8466

77202 7590 03/30/2009
K&L Gates LLP
3580 Carmel Mountain Road
Suite 200
San Diego, CA 92130

EXAMINER
CHERNYSHEV, OLGA N

ART UNIT	PAPER NUMBER
1649	

MAIL DATE	DELIVERY MODE
03/30/2009	PAPER

Please find below and/or attached an Office communication concerning this application or proceeding.

The time period for reply, if any, is set in the attached communication.

UNITED STATES PATENT AND TRADEMARK OFFICE

Commissioner for Patents
United States Patent and Trademark Office
P.O. Box 1450
Alexandria, VA 22313-1450
www.uspto.gov

MAR 3 0 2009

K&L Gates LLP
3580 Carmel Mountain Road
Suite 200
San Diego CA 92130

In re Application of:	:
Dennis Burton et al.	:
Serial No.: 10/410,907	: PETITION DECISION
Filed: April 8, 2003	:
Attorney Docket No.: **119362-00011 / 1229**	:

This is in response to the petition under 37 CFR § 1.181, filed March 2, 2009, requesting that the finality of the Office action of January 7, 2009 be withdrawn.

BACKGROUND

The examiner mailed a non-final Office action on January 4, 2008 setting a three month statutory limit for reply. At the time of this non-final Office action, claims 1-114 were pending, claims 17, 49-93 and 95-108 were withdrawn as being directed toward a non-elected invention and claims 1-16, 18-48, 94 and 109-112 were examined on their merits. Claims 113 and 114 were objected to on the merits. Inter alia, in this Office action, the examiner rejected claims 29-33, 35, 36 and 38 under 35 USC 112, second paragraph, for being indefinite. Specifically, the examiner indicted the following:

> Claims 29-33, 35, 36, 38 recite references to specific amino acid residues within the sequence of a prion polypeptide. Since the art recognizes different sequences of prion polypeptides (derived from different species, for example), the precise structure of the claimed product is vague and indefinite. (see page 6 of this non-final Office action).

On July 7, 2008, applicants submitted a response including arguments and amendments to several claims including claims 35 and 36.

On January 7, 2009, the examiner mailed a final Office action setting a three month statutory limit for reply. At the time of this final Office action, claims 28-39, 49-62, 67-70, 94 and 109-

130 were pending in the application. Claims 49-62 and 67-70 were withdrawn from examination on their merits, with claims 28-39, 94, 109, 110-126 and 127-130 being examined on their merits. Claims 111 and 127 were objected to on the merits. *Inter alia*, the examiner instituted a new rejection over claims 35 and 36 under 35 USC 112, second paragraph:

> Claims 35 and 36 are vague and ambiguous, as being incomplete for omitting essential structural cooperative relationships of elements, such omission amounting to a gap between the necessary structural connections. See MPEP § 2172.01. The omitted structural cooperative relationships are: the claims are directed to a polypeptide comprising an antibody wherein residues of the prion protein are inserted into SEQ ID NO: 4 and the structural relationship between the antibody, or a fragment thereof, and the prion polypeptide, or a binding portion thereof, and SEQ ID NO: 4 are not immediately obvious. It appears that the claims are directed to a hybrid protein wherein certain fragment of a prion protein is inserted into the immunoglobulin frame. If this is what Applicant is intended to claim, then it is suggested that the claims are rewritten to unambiguously define the structure of the claimed product. (see page 5 of the final Office action).

In response thereto, applicants filed this petition on March 2, 2009, requesting that the finality of the Office action of January 7, 2009 be withdrawn.

DISCUSSION

The petition and the file history have been carefully considered.

In the petition filed by applicants on March 2, 2009, applicants request reconsideration of the finality rendered in the Office action mailed by the examiner on January 7, 2009 because it is considered that the final rejection was premature and improper.

Specifically, applicants contend that the rejection of 35 and 36 under 35 USC 112, second paragraph, was a new ground of rejection which was not necessitated by applicants' amendments to the claimed invention. Applicants assert that the examiner could have set forth such a rejection in the non-final Office action of January 4, 2008.

In support of their contentions, applicants provide claims 35 and 36 as they stood at the time the amendment was filed on October 17, 2008 as well as how they stood prior to this amendment as presented in the claims submitted by applicant on April 4, 2007. It is noted that although claim amendments were submitted by applicants on July 7, 2008, these amendments were not entered into the record as the amendment was non-compliant (see non-compliant letter of October 10, 2008). Thus, claims 35 and 36, as they were examined at the time the non-final Office action was mailed on January 4, 2008 stated, respectively:

> 35. The polypeptide of claim 25 that comprises antibody b12 or a fragment therein, wherein residues 121-158 or a binding portion thereof of a prion are inserted in place of residues 119-131 of SEQ ID No. 4.
>
> 36. The polypeptide of claim 25 that comprises antibody b 12 or a fragment therein, wherein residues 87-112 or a binding portion thereof of a prion are inserted in place of residues 119-131 of SEQ ID No. 4. (see claims of April 4, 2007)

Claim 25, from which both of claims 35 and 36 depended, stated:

> 25. An isolated substantially pure polypeptide that specifically binds to the infectious form of a prion protein. (see claims of April 4, 2007)

Subsequently, at the time the amendment of October 17, 2008 was filed, claims 35 and 36 were amended by applicants as follows:

> 35. An isolated substantially pure polypeptide that specifically binds to the infectious form of a prion protein, comprising: ~~The polypeptide of claim 25 that comprises~~ antibody b12 or a fragment thereof ~~therein~~, wherein residues 121-158 of the prion polypeptide whose sequence is set forth in SEQ ID NO: 5 or the corresponding residues from prion polypeptides of other species or a binding portion thereof of ~~a~~ the prion polypeptide are inserted in place of residues 119-131 of SEQ ID ~~No.~~ NO: 4.
>
> 36. An isolated substantially pure polypeptide that specifically binds to the infectious form of a prion protein, comprising: ~~The polypeptide of claim 25 that comprises~~ antibody b12 or a fragment thereof ~~therein~~, wherein residues 87-112 or a binding portion thereof of ~~a~~ the prion polypeptide whose sequence is set forth in SEQ ID NO: 5 or the corresponding residues from prion polypeptides of other species are inserted in place of residues 119-131 of SEQ ID ~~No.~~ NO: 4

Applicants argue:

> Claim 35 as amended recites the same structural relationship among the antibody, or a fragment thereof, and the prion polypeptide, or a binding portion thereof, and SEQ ID NO: 4, as previously pending claim 35. The only difference in recitation of the structure between previously pending claim 35 and amended claim 35 is that amended claim 35 clarifies the source of the prion, i.e. "the prion polypeptide whose sequence is set forth in SEQ ID NO: 5 or the corresponding residues from prion polypeptides of other species." This amendment, however, has no relevance to the relationship among the antibody, or a fragment thereof, and the prion polypeptide, or a binding portion thereof, and SEQ ID NO: 4. The amendment to claim 35 does not in any way change the description, compared to previously pending claim 35, of the structural relationship among the antibody, or a fragment thereof, and the prion polypeptide, or a binding portion thereof, and SEQ ID NO: 4. Previously pending claim 35 could have been rejected on the same basis as presently pending claim 35. (p. 3, Petition)

Applicants set forth a substantially identical argument pertaining to claim 36:

> Similarly, the amendments to claim 36 have no effect on the recitation of the structural relationship among the antibody, or a fragment thereof, and the prion polypeptide, or a binding portion thereof, and SEQ ID NO: 4. (p. 3, Petition)

MPEP § 706.07 provides:

> Under present practice, second or any subsequent actions on the merits shall be final, except where the examiner introduces a new ground of rejection that is neither necessitated by applicant's amendment of the claims nor based on information submitted in an information disclosure statement filed during the period set forth in 37 CFR 1.97(c) with the fee set forth in 37 CFR 1.17(p)."
>
> ...[b]efore final rejection is in order a clear issue should be developed between the examiner and applicant. To bring the prosecution to as speedy conclusion as possible and at the same time to deal justly by both the applicant and the public, the invention as disclosed and claimed should be thoroughly searched in the first

> action and the references fully applied; and in reply to this action the applicant should amend with a view to avoiding all the grounds of rejection and objection. Switching from one subject matter to another in the claims presented by applicant in successive amendments, or from one set of references to another by the examiner in rejecting in successive actions claims of substantially the same subject matter, will alike tend to defeat attaining the goal of reaching a clearly defined issue for an early termination, i.e., either an allowance of the application or a final rejection.

To reiterate from above, at the time the non-final Office action was mailed, the examiner instituted the following rejection under 35 USC 112, second paragraph:

> Claims... 35, 36... recite references to specific amino acid residues within the sequence of a prion polypeptide. Since the art recognizes different sequences of prion polypeptides (derived from different species, for example), the ***precise structure of the claimed product is vague and indefinite.*** (see page 6 of this non-final Office action, emphasis added).

In the final Office action, the examiner determined claims 35 and 36 were vague and indefinite by instituting the following rejection:

> Claims 35 and 36 are vague and ambiguous, as being incomplete for omitting essential structural cooperative relationships of elements, such omission amounting to a gap between the necessary structural connections. See MPEP § 2172.01. The omitted structural cooperative relationships are: the claims are directed to a **polypeptide** comprising an antibody **wherein residues of the prion protein are inserted into SEQ ID NO: 4 and the structural relationship between the antibody, or a fragment thereof, and the prion polypeptide, or a binding portion thereof, and SEQ ID NO: 4 are not immediately obvious.** It appears that the claims are directed to a hybrid protein wherein certain fragment of a prion protein is inserted into the immunoglobulin frame. If this is what Applicant is intended to claim, then it is suggested that the claims are rewritten to unambiguously define the structure of the claimed product. (see page 5 of the final Office action, emphasis added).

MPEP § 1207.03 (III) provides keen insight in to what constitutes a new ground of rejection:

> There is no new ground of rejection when the basic thrust of the rejection remains the same such that an appellant has been given a fair opportunity to react to the rejection. See *In re Kronig*, 539 F.2d 1300, 1302-03, 190 USPQ 425, 426-27 (CCPA 1976). Where the statutory basis for the rejection remains the same, and the evidence relied upon in support of the rejection remains the same, *a change in the discussion of, or rationale in support of, the rejection does not necessarily constitute a new ground of rejection.* **Id.** at 1303, 190 USPQ at 427 (reliance upon fewer references in affirming a rejection under 35 U.S.C. 103 does not constitute a new ground of rejection) (emphasis added).

It is clear from the non-final Office action, that claims 35 and 36 were both rejected under 35 USC 112, second paragraph, by the examiner because the examiner could not determine the exact protein sequence of the final protein product after insertion of the prion into the host peptide sequence. As acquiesced by applicants "claim 35 as amended recites the same structural relationship... among the antibody, or a fragment thereof, and the prion polypeptide, or a binding portion thereof, and SEQ ID NO: 4, as previously pending claim 35...[t]his amendment ...has no relevance to the relationship among the antibody, or a fragment thereof, and the prion polypeptide or a binding portion thereof and SEQ ID NO:4. Previously pending claim 35 could have been rejected on the same basis as presently pending claim 35." Applicant proffers substantially the same argument regarding claim 36.

Thus, it is evident that claim 35 as well as claim 36 *were* rejected under 35 USC 112, second paragraph, in the non-final Office action for essentially the same reasons set forth in the final Office action. It is deemed that the *basic thrust* of the examiner's rejection of claims 35 and 36 remained the same between the non-final Office action instituted January 4, 2008 and the final Office action instituted January 7, 2009. Although the examiner modified the rejection in the final Office action, the modification was merely an elaboration of the same rejection instituted in the non-final Office action. The original basis for the rejection of claims 35 and 36 under 35 US 112, second paragraph, as set forth in the non-final Office action was thus maintained by the examiner in the final Office action; that basis being that in claims 35 and 36, the *final structure of the protein after prion insertion could not be determined and was therefore found to be indefinite.* Hence, no impropriety is found on the part of the examiner for rendering final the Office action mailed January 7, 2009.

Thus, applicants' assertion that the rejection of claims 35 and 36 under 35 USC 112, second paragraph, in the final Office action was a new rejection is not persuasive. Consequently, the final Office action of January 7, 2009 is not considered improper and the finality of said Office action will not be withdrawn.

DECISION

The petition is **DENIED.**

Any new or renewed petition must be filed within TWO MONTHS of the mail date of this decision.

Should there be any questions about this decision please contact Marianne C. Seidel, by letter addressed to Director, TC 1600, at the address listed above, or by telephone at 571-272-0584 or by facsimile sent to the general Office facsimile number, 703-872-9306.

Andrew Wang
Acting Director, Technology Center 1600

UNITED STATES PATENT AND TRADEMARK OFFICE

UNITED STATES DEPARTMENT OF COMMERCE
United States Patent and Trademark Office
Address: COMMISSIONER FOR PATENTS
P.O. Box 1450
Alexandria, Virginia 22313-1450
www.uspto.gov

APPLICATION NO.	FILING DATE	FIRST NAMED INVENTOR	ATTORNEY DOCKET NO.	CONFIRMATION NO.
10/410,907	04/08/2003	Dennis R. Burton	119362-00011 / 1229	8466

77202 7590 06/15/2009
K&L Gates LLP
3580 Carmel Mountain Road
Suite 200
San Diego, CA 92130

EXAMINER
CHERNYSHEV, OLGA N

ART UNIT	PAPER NUMBER
1649	

MAIL DATE	DELIVERY MODE
06/15/2009	PAPER

Please find below and/or attached an Office communication concerning this application or proceeding.

The time period for reply, if any, is set in the attached communication.

UNITED STATES PATENT AND TRADEMARK OFFICE

Commissioner for Patents
United States Patent and Trademark Office
P.O. Box 1450
Alexandria, VA 22313-1450
www.uspto.gov

JUN 1 5 2009

Bell, Boyd & Lloyd LLP
3580 Carmel Mountain Road Suite 200
San Diego, CA 92130

In re Application of:	:
Dennis Burton et al.	:
Serial No.: 10/410,907	: PETITION DECISION
Filed: April 8, 2003	:
Attorney Docket No.:	:
119362-00011/1229	

This is in response to the Petition under 37 CFR § 1.181, filed May 15, 2009, requesting that the Director reconsider the Denial of Applicants' previous Petition filed on March 2, 2009, the Denial being rendered March 30, 2009.

BACKGROUND

The examiner mailed a non-final Office action on January 4, 2008 setting a three month statutory limit for reply. At the time of this non-final Office action, claims 1-114 were pending, claims 17, 49-93 and 95-108 were withdrawn as being directed toward a non-elected invention and claims 1-16, 18-48, 94 and 109-112 were examined on their merits with claims 113 and 114 being objected. *Inter alia*, in this Office action, the examiner rejected claims 29-33, 35, 36 and 38 under 35 USC 112, second paragraph, for being indefinite. Specifically, the examiner indicted the following:

> Claims 29-33, 35, 36, 38 recite references to specific amino acid residues within the sequence of a prion polypeptide. Since the art recognizes different sequences of prion polypeptides (derived from different species, for example), the precise structure of the claimed product is vague and indefinite. (see page 6 of this non-final Office action).

On July 7, 2008, applicants submitted a response including arguments and amendments to several claims including claims 35 and 36.

On January 7, 2009, the examiner mailed a final Office action setting a three month statutory limit for reply. At the time of this final Office action, claims 28-39, 49-62, 67-70, 94 and 109-

130 were pending in the application. Claims 49-62 and 67-70 were withdrawn from examination on their merits, with claims 28-39, 94, 109, 110-126 and 127-130 being examined on their merits. Claims 111 and 127 were objected to on the merits. The examiner instituted a rejection over claims 35 and 36 under 35 USC 112, second paragraph:

> Claims 35 and 36 are vague and ambiguous, as being incomplete for omitting essential structural cooperative relationships of elements, such omission amounting to a gap between the necessary structural connections. See MPEP § 2172.01. The omitted structural cooperative relationships are: the claims are directed to a polypeptide comprising an antibody wherein residues of the prion protein are inserted into SEQ ID NO: 4 and the structural relationship between the antibody, or a fragment thereof, and the prion polypeptide, or a binding portion thereof, and SEQ ID NO: 4 are not immediately obvious. It appears that the claims are directed to a hybrid protein wherein certain fragment of a prion protein is inserted into the immunoglobulin frame. If this is what Applicant is intended to claim, then it is suggested that the claims are rewritten to unambiguously define the structure of the claimed product. (see page 5 of the final Office action).

In response thereto, applicants filed a Petition on March 2, 2009, requesting that the finality of the Office action of February 27, 2008 be withdrawn.

A Petition Decision was mailed on March 30, 2009 denying applicants' request to remove the finality of the Office action of February 27, 2008.

Applicants filed this Petition under 37 CFR § 1.181, filed May 15, 2009, requesting that the Director reconsider the Denial of Applicants' previous Petition filed on March 2, 2009, the Denial being rendered March 30, 2009.

DISCUSSION

The Petition and the file history have been carefully considered.

In the Petition filed by applicants on May 15, 2009, applicants request reconsideration of the Denial of the previous Petition filed on March 2, 2009. It remains applicants' assertion that the final rejection mailed February 27, 2008 was premature and improper and thus again beseech the Director to remove the finality of said Office action.

For reference, claims 25, 35 and 36 are presented as they were pending at the time of the non-final Office action:

> 25. An isolated substantially pure polypeptide that specifically binds to the infectious form of a prion protein. (see claims of April 4, 2007)
>
> 35. The polypeptide of claim 25 that comprises antibody b12 or a fragment therein, wherein residues 121-158 or a binding portion thereof of a prion are inserted in place of residues 119-131 of SEQ ID No. 4.

36. The polypeptide of claim 25 that comprises antibody b 12 or a fragment therein, wherein residues 87-112 or a binding portion thereof of a prion are inserted in place of residues 119-131 of SEQ ID No. 4. (see claims of April 4, 2007)

In the non-final Office action, the examiner instituted the following rejection over claims 35 and 36 under 35 USC 112, second paragraph:

> Claims... 35, 36... recite references to specific amino acid residues within the sequence of a prion polypeptide. Since the art recognizes different sequences of prion polypeptides (derived from different species, for example), the ***precise structure of the claimed product is vague and indefinite.*** (see page 6 of this non-final Office action, emphasis added).

Subsequently, at the time the amendment of October 17, 2008 was filed, claims 35 and 36 were amended by applicants as follows:

> 35. An isolated substantially pure polypeptide that specifically binds to the infectious form of a prion protein, comprising: ~~The polypeptide of claim 25 that comprises~~ antibody b12 or a fragment thereof ~~therein~~, wherein residues 121-158 of the prion polypeptide whose sequence is set forth in SEQ ID NO: 5 or the corresponding residues from prion polypeptides of other species or a binding portion thereof of ~~a~~ the prion polypeptide are inserted in place of residues 119-131 of SEQ ID ~~No.~~ NO: 4.
>
> 36. An isolated substantially pure polypeptide that specifically binds to the infectious form of a prion protein, comprising: ~~The polypeptide of claim 25 that comprises~~ antibody b12 or a fragment thereof ~~therein~~, wherein residues 87-112 or a binding portion thereof of ~~a~~ the prion polypeptide whose sequence is set forth in SEQ ID NO: 5 or the corresponding residues from prion polypeptides of other species are inserted in place of residues 119-131 of SEQ ID ~~No.~~ NO: 4

In the final Office action, the examiner determined claims 35 and 36 were vague and indefinite by instituting the following rejection:

> Claims 35 and 36 are vague and ambiguous, as being incomplete for omitting essential structural cooperative relationships of elements, such omission amounting to a gap between the necessary structural connections. See MPEP § 2172.01. The omitted structural cooperative relationships are: the claims are directed to a **polypeptide** comprising an antibody **wherein residues of the prion protein are inserted into SEQ ID NO: 4 and the structural relationship between the antibody, or a fragment thereof, and the prion polypeptide, or a binding portion thereof, and SEQ ID NO: 4 are not immediately obvious.** It appears that the claims are directed to a hybrid protein wherein certain fragment of a prion protein is inserted into the immunoglobulin frame. If this is what Applicant is intended to claim, then it is suggested that the claims are rewritten to unambiguously define the structure of the claimed product. (see page 5 of the final Office action, emphasis added).

Applicants commence their arguments by traversing the denial of applicants' original request to remove finality of the Office action dated February 27, 2008. Applicants point to the differences rendered in the 35 USC 112, second paragraph, rejections between the non-final and final Office actions:

> [c]laims 35 and 36 were rejected in the final Office Action...for not clearly setting forth the relationship between the prion motif and the antibody scaffold. In contrast, claims 35 and 36 were previously rejected in the non-final Office action of January 4, 2008 for reciting residues of a prion protein but not specifying the reference polypeptide. (p. 2, Petition, emphasis omitted).

Applicants argue that "[t]he Examiner does not, in the rejection set forth in the non-final Office Action of January 4, 2008, state that that [*sic*] claims 35 and 36 do not clearly set forth the relationship between the prion motif and the antibody. There is absolutely no mention of the antibody in this previous rejection." (p. 3, Petition).

While it is clear that the language used by the Examiner in each of the rejections made over claims 35 and 36 in the non-final and final rejections respectively was different; the crux of the rejection remained the same; that being that the Examiner *could not determine a definite structure of polypeptide*. While the examiner did not *verbatim* mention the term 'antibody' in the non-final rejection, the examiner did indicate that the structure of the polypeptide could not be determined. Since the antibody or fragment thereof is part of the polypeptide in claim 35 for example, it is taken from the statements by the examiner in the non-final office action that the complete structure, including the antibody was indefinite.

In the non-final Office action, the examiner could not determine a definite sequence of polypeptide which is clear from her statement: "the ***precise structure of the claimed product is vague and indefinite."*** (emphasis added)

Similarly, in the final Office action, the examiner could not determine a definite sequence of polypeptide (see page 5, item 12, of Office action):

> The omitted structural cooperative relationships are: the claims are directed to a **polypeptide** comprising an antibody **wherein residues of the prion protein are inserted into SEQ ID NO: 4 and the structural relationship between the antibody, or a fragment thereof, and the prion polypeptide, or a binding portion thereof, and SEQ ID NO: 4 are not immediately obvious.** It appears that the claims are directed to a hybrid protein wherein certain fragment of a prion protein is inserted into the immunoglobulin frame. If this is what Applicant is intended to claim, then *it is suggested that the claims are rewritten to* ***unambiguously define the structure of the claimed product.*** (emphasis added)

Hence, while applicants attempted to overcome the original rejection made over claims 35 and 36 under 35 USC 112, second paragraph, by amending these claims on October 17, 2008, the underlying premise for the rejection of claims 35 and 36 under 35 USC 112, second paragraph, made in the final Office action remained *essentially the same*. Variations in wording describing the reasons for rejecting claims 35 and 36 under 35 USC 112, second paragraph, made in the final Office action can be said to have occurred solely in response to applicants' amendments to claims 35 and 36 in the interim between the non-final and final Office actions. In this respect, *arguendo*, the rejection made over claims 35 and 36 in the final Office action may have been a new rejection *per se*; however, said rejection was permissible considering applicants' new amendments to claims 35 and 36 in the interim between the non-final and final Office actions. It is additionally pointed out that although applicants amended claim 35 to include wherein the prion polypeptide sequence is set forth in SEQ ID NO: 5, applicants also included a new

recitation of 'or the corresponding residues from prion polypeptides of other species.' Here, applicants reverted back to the reason the examiner set forth the rejection over claim 35 initially, that the examiner could not determine exactly what structure of polypeptide applicants intended to claim.

Applicants argue that they could not have addressed the rejection made over claims 35 and 36 prior to the final Office action because such a rejection was not made in the non-final Office action (p. 3, Petition). However, the specifics as set forth over the rejection of claims 35 and 36 were ancillary to the original rejection and in direct response to applicants' amendment to the claims. Clearly, applicants' attempt to rectify the rejection of claims 35 and 36 by amending claims 35 and 36 in such a manner as set forth above, did not rectify the rejection because the examiner remained of the opinion that the claimed polypeptide was not definite.

> [N] ote that an examiner cannot be expected to foresee whether or how an applicant will amend a claim to overcome a rejection except in very limited circumstances (e.g., where the examiner suggests how applicant can overcome a rejection under 35 U.S.C. 112, second paragraph)MPEP § 904

It is deemed that the *basic thrust* of the examiner's rejection of claims 35 and 36 remained the same between the non-final Office action instituted January 4, 2008 and the final Office action instituted January 7, 2009. Although the examiner modified the rejection in the final Office action, the modification was merely an elaboration of the same rejection instituted in the non-final Office action. The original basis for the rejection of claims 35 and 36 under 35 US 112, second paragraph, as set forth in the non-final Office action was thus maintained by the examiner in the final Office action; that basis being that in claims 35 and 36, the *final structure of the protein after prion insertion could not be determined and was therefore found to be indefinite.* Considering *arguendo*, that the rejection instituted by the examiner over claims 35 and 36 in the final Office action was a new rejection, the rejection was instituted by applicants' amendments to claims 35 and 36. Hence, no impropriety is found on the part of the examiner for rendering final the Office action mailed January 7, 2009.

Thus, contrary to applicants' reiterated assertions in this request for reconsideration, the final Office action rendered on January 7, 2009 was proper and the finality of said Office action will not be removed.

DECISION

The petition is again **DENIED.**

Any new or renewed petition must be filed within TWO MONTHS of the mail date of this decision.

Should there be any questions about this decision please contact Marianne C. Seidel, by letter addressed to Director, TC 1600, at the address listed above, or by telephone at 571-272-0584 or by facsimile sent to the general Office facsimile number, 703-872-9306.

Remy Yucel
Director, Technology Center 1600

UNITED STATES PATENT AND TRADEMARK OFFICE

Commissioner for Patents
United States Patent and Trademark Office
P.O. Box 1450
Alexandria, VA 22313-1450
www.uspto.gov

MAY 23 2007

KELLEY DRYE & WARREN LLP
3050 K STREET, NW
SUITE 400
WASHINGTON DC 20007

In re Application of: TROUT, HUGH III et al. Serial No.: 10/410,924 Filed: Apr. 11, 2003 Docket: 23660-00640 Title: STABILIZING SURGICAL DELIVERY APPARATUS AND METHOD OF USE	DECISION ON PETITION TO WITHDRAW FINALITY OF THE FINAL OFFICE ACTION

This is a decision on the petition filed on Jan. 17, 2006 to withdraw the finality of the Office action of Sep. 9, 2005.

The petition is **DISMISSED as untimely**.

The examiner issued a non-final Office action on Apr. 11, 2005 rejecting claims 1 and 9-11 (claims 2-8 and 12-20 were withdrawn due to a restriction requirement). In response to the non-final Office action, on Jul. 11, 2005, the petitioner filed an amendment to independent claims 1 and 9, presented new claim 21, and canceled claim 5 (petitioner also amended the non-elected claims). On Sep. 9, 2005, the examiner issued a final Office action rejecting claims 1, 9-11, 18, 19 and 21. In the final Office action, the examiner rejoined claims 18 and 19 as being readable on the elected species and indicated that claims 2-4, 6-8, 12-17 and 20 remained withdrawn. On Nov. 9, 2005, the petitioner filed an after final amendment with amendments to claims 9, 10, 13, 16-19, 21 and presented new claims 22-25. On Nov. 22, 2005, the examiner issued an advisory action informing the applicant that the amendments to the claims would not be entered because they present additional claims without canceling a corresponding number of finally rejected claims. The examiner also stated in the advisory action that the status identifiers of claims 2-4, 6-8, 12-17 and 20 was incorrect and that the amendments to the claims do not overcome the art of record applied in the rejections and that applicant's arguments were not convincing with respect to the unamended claims. On Dec. 9, 2005, the petitioner filed a second amendment after final. On Jan. 6, 2006, the examiner issued a second advisory action refusing entry of the second amendment after final because the amendments to the claims raise new issues that would require further consideration and/or search and that the amendment presents additional claims without canceling a corresponding number of finally rejected claims. On Jan. 9, 2006, the petitioner filed

a request for continued examination requesting entry of the previously submitted amendment. On Jan. 17, 2006, the petitioner filed the current petition to withdraw finality of the Office action issued on Sep. 9, 2005.

The petitioner's request to withdraw the finality of the Office action mailed on Sep. 9, 2005 was based on the fact that claims 9 and 18 were amended only to change the word "articulating" to the word "bending" in both claims. Petitioner argues in the petition filed Jan. 17, 2006 that the terms "articulating" and "bending" cannot necessitate a new ground of rejection because the specification imparts identical meaning to each term as related to overcome the rejection from Reed. It is clear from the record that petitioner's amendments to claims 9 and 18 necessitated the new grounds of rejection applied in the final Office action dated Sep. 9, 2005. In the final Office action dated Sep. 9, 2005, the examiner rejected claims 9 and 18 under 35 USC 102(e) in view of a new prior art reference, US 2001/0041874 to Reydel. Petitioner's argument that the specification imparts identical meaning to the terms "articulating" and "bending" is not convincing. The terms "articulating" and "bending" are not identical and clearly have different scope. Articulating an object is not the same as bending an object.

Applicable Rules or Statutes

37 CFR 1.181(f):
The mere filing of a petition will not stay any period for reply that may be running against the application, nor act as a stay of other proceedings. Any petition under this part not filed within two months of the mailing date of the action or notice from which relief is requested may be dismissed as untimely, except as otherwise provided. This two-month period is not extendable.

Discussion

Review of the record shows that the instant petition was filed more than four months after the mailing date of the final Office action of Sep. 9, 2005. Pursuant to 37 CFR 1.181(f), the petition is not timely filed since the petition was not filed within two months of the action complained of. Petitioner states that the petition is untimely because it is the advisory action that has resulted in the petition, however, the relief petitioner seeks to overturn is the final Office action. As the petition was not timely filed, the relief requested will not be granted. Petitioner is entitled to request reconsideration of this decision provided that the request for reconsideration is filed within two months of the date of this decision.

The application is being forwarded to the Supervisory Patent Examiner of Art Unit 3739 for further processing. Any inquiry regarding this decision should be directed to Marc Jimenez, Training Quality Assurance Specialist at (571) 272-4530.

PETITION DISMISSED

Frederick R. Schmidt, Director
Technology Center 3700

UNITED STATES PATENT AND TRADEMARK OFFICE

Commissioner for Patents
United States Patent and Trademark Office
P.O. Box 1450
Alexandria, VA 22313-1450
www.uspto.gov

KELLEY DRYE & WARREN LLP
3040 K STREET, NW
SUITE 400
WASHINGTON, DC 20007

In re Application of	:	
Hugh TROUT III, et al	:	
Application No. 10/410,924	:	DECISION ON PETITION
Filed: April 11, 2003	:	TO WITHDRAW
Attorney Docket No.		FROM RECORD
	:	

This is a decision on the Request to Withdraw as attorney or agent of record under 37 C.F.R. § 1.36(b), filed January 18, 2008.

The request is **NOT APPROVED**.

A grantable request to withdraw as attorney/agent of record must be signed by every attorney/agent seeking to withdraw or contain a clear indication that one attorney is signing on behalf of another/others. A request to withdraw will not be approved unless at least 30 (thirty) days would remain between the date of approval and the later of the expiration date of a time to file a response or the expiration date of the maximum time period which can be extended under 37 C.F.R. § 1.136(a).

The request cannot be approved because the attorneys of record were not appointed by customer number.

All future communications from the Office will continue to be directed to the above-listed address until otherwise notified by applicant.

There are no outstanding Office actions pending at the present time.

Telephone inquiries concerning this decision should be directed to the undersigned at 571-272-6735.

Diane Goodwyn
Petitions Examiner
Office of Petitions

Cc: HUGH H. TROUT, III, M.D.
8218 WISCONSIN AVENUE,
SUITE 204
BETHESDA, MD 20814

UNITED STATES PATENT AND TRADEMARK OFFICE

Commissioner for Patents
United States Patent and Trademark Office
P.O. Box 1450
Alexandria, VA 22313-1450
www.uspto.gov

KELLEY DRYE & WARREN LLP
3050 K STREET, NW, SUITE 400
WASHINGTON, DC 20007

COPY MAILED
JAN 21 2009

In re Application of	:	
Hugh TROUT III, et al	:	
Application No. 10/410,924	:	DECISION ON PETITION
Filed: April 11, 2003	:	TO WITHDRAW
Attorney Docket No.	:	FROM RECORD
	:	

This is a decision on the Request to Withdraw as attorney or agent of record under 37 C.F.R. § 1.36(b), filed January 8, 2009.

The request is **APPROVED**.

A grantable request to withdraw as attorney/agent of record must be signed by every attorney/agent seeking to withdraw or contain a clear indication that one attorney is signing on behalf of another/others. The Office requires the practitioner(s) requesting withdrawal to certify that he, she, or they have: (1) given reasonable notice to the client, prior to the expiration of the response period, that the practitioner(s) intends to withdraw from employment; (2) delivered to the client or a duly authorized representative of the client all papers and property (including funds) to which the client is entitled; and (3) notified the client of any responses that may be due and the time frame within which the client must respond, pursuant 37 CFR 10.40(c).

The request was signed by John N. Coulby on behalf of all the attorneys of record.

All the attorneys of record have been withdrawn.

Applicant is reminded that there is no attorney of record at this time.

The correspondence address of record has been changed and the new correspondence address is the address indicated below until otherwise properly notified by the applicant.

Telephone inquiries concerning this decision should be directed to the undersigned at 571-272-6735.

Diane Goodwyn
Petitions Examiner
Office of Petitions

cc: HUGH H. TROUT, III, M.D.
8218 WISCONSIN AVENUE
SUITE 204
BETHESDA, MD 20814

UNITED STATES PATENT AND TRADEMARK OFFICE

Commissioner for Patents
United States Patent and Trademark Office
P.O. Box 1450
Alexandria, VA 22313-1450
www.uspto.gov

MORGAN, LEWIS & BOCKIUS LLP (SF)
2 PALO ALTO SQUARE
3000 El Camino Real, Suite 700
PALO ALTO CA 94306

COPY MAILED

SEP 12 2007

OFFICE OF PETITIONS

In re Patent No. 7,214,660
Issued: May 8, 2007
Application No. 10/410,945
Filed: April 9, 2003
Dkt. No.: 40853-01-5083-US

: DECISION ON APPLICATION FOR PTA and NOTICE OF INTENT TO ISSUE CERTIFICATE OF CORRECTION

This decision is in response to the "PETITION FOR PATENT TERM ADJUSTMENT UNDER 37 CFR 1.705," filed July 12, 2007. This matter is being treated as an application for patent term adjustment under 37 CFR 1.705(d).

The request for reconsideration of patent term adjustment (PTA) is **GRANTED**.

The above-identified application matured into U.S. Patent No. 7,214,660 on May 8, 2007. The instant request for reconsideration was timely filed July 12, 2007 (certificate of mailing date of July 9, 2007) in accordance with 37 CFR 1.705(d). The patent issued with a PTA of 296 days. Patentees argue that the correct adjustment is 381 days. Patentees further argue that the post-allowance reduction of 85 days is in error.

A review of the record reveals that a Rule 312 amendment was filed February 5, 2007 and that a response thereto was mailed February 12, 2007. In view thereof, the period of reduction under 37 CFR 1.704(c)(10) is eight days, commencing February 5, 2007 and ending February 12, 2007. The further reduction of 85 days is in error and shall be corrected via certificate of correction.

In view thereof, the patent is entitled to an adjustment of 381 days (adjustment of 394 days less reductions of 13 days), as argued by patentees.

Receipt is hereby acknowledged of the required $200.00 patent term adjustment application fee.

This application file will be forwarded to the Certificate of Corrections branch for issuance of a certificate of correction.

to indicate that the term of this patent is extended or adjusted under 35 U.S.C. 154(b) by 381 days.

Telephone inquiries specific to this matter should be directed to Petitions Attorney Alesia M. Brown at (571) 272-3205.

Kery A. Fries

Kery Fries
Senior Legal Advisor
Office of Patent Legal Administration
Office of Deputy Commissioner
for Patent Examination Policy

CC: Draft Certificate of Correction

Day : Tuesday
Date: 9/11/2007

PALM INTRANET

Time: 11:34:35

PTA Calculations for Application: 10/410945			
Application Filing Date:	04/09/2003	PTO Delay (PTO):	394
Issue Date of Patent:	05/08/2007	Three Years:	0
Pre-Issue Petitions:	0	Applicant Delay (APPL):	98
Post-Issue Petitions:	0	Total PTA (days):	381
PTO Delay Adjustment:	85		

File Contents History

Number	Date	Contents Description	PTO	APPL	START
78	09/11/2007	ADJUSTMENT OF PTA CALCULATION BY PTO	85		
77	09/11/2007	ADJUSTMENT OF PTA CALCULATION BY PTO	85		
76	09/11/2007	ADJUSTMENT OF PTA CALCULATION BY PTO		85	
71.5	04/18/2007	PTA 36 MONTHS	10		
71	05/08/2007	PATENT ISSUE DATE USED IN PTA CALCULATION			
70	04/02/2007	EXPORT TO FINAL DATA CAPTURE			
69	03/30/2007	FINISHED INITIAL DATA CAPTURE			
68	03/30/2007	DISPATCH TO FDC			
67	02/22/2007	PG-PUB ISSUE NOTIFICATION			
66	02/14/2007	APPLICATION IS CONSIDERED READY FOR ISSUE			
65	02/14/2007	WORKFLOW - QUERY REQUEST - FINISH			
64	02/12/2007	CRF IS GOOD TECHNICALLY / ENTERED INTO DATABASE			
63	02/12/2007	MAIL RESPONSE TO 312 AMENDMENT (PTO-271)			
62	02/12/2007	RESPONSE TO AMENDMENT UNDER RULE 312			
61	02/05/2007	AMENDMENT AFTER NOTICE OF ALLOWANCE (RULE 312)		8	63
60	02/05/2007	MISCELLANEOUS INCOMING LETTER		85	
59	02/05/2007	STATEMENT FILED INDICATING A LOSS OF ENTITLEMENT TO SMALL ENTITY STATUS			
58	02/05/2007	ISSUE FEE PAYMENT VERIFIED			
57	02/05/2007	ISSUE FEE PAYMENT RECEIVED			
56	02/05/2007	REVERSE ISSUE FEE			
55	02/05/2007	ISSUE FEE PAYMENT RECEIVED			
54	01/08/2007	PUBS CASE REMAND TO TC			

53	01/22/2007	MAIL MISCELLANEOUS COMMUNICATION TO APPLICANT			
52	01/19/2007	MISCELLANEOUS COMMUNICATION TO APPLICANT - NO ACTION COUNT			
51	01/11/2007	WORKFLOW - QUERY REQUEST - BEGIN			
50	01/05/2007	SEQUENCE FORWARDED TO PUBS ON TAPE			
49	12/29/2006	EXPORT TO INITIAL DATA CAPTURE			
48	12/27/2006	MAIL NOTICE OF ALLOWANCE	116		38
47	12/27/2006	MAIL EXAMINER'S AMENDMENT			
46	11/28/2006	NOTICE OF ALLOWANCE DATA VERIFICATION COMPLETED			
45	11/14/2006	RECEIPT OF ALL ACKNOWLEDGEMENT LETTERS			
44	08/01/2006	EXAMINER'S AMENDMENT COMMUNICATION			
43	06/20/2006	NOTICE OF ALLOWABILITY			
42	03/13/2006	INFORMATION DISCLOSURE STATEMENT CONSIDERED			
41	05/12/2006	PARALEGAL TD ACCEPTED			
40	05/02/2006	TERMINAL DISCLAIMER FILED		0	38
39	05/11/2006	DATE FORWARDED TO EXAMINER			
38	05/02/2006	RESPONSE AFTER NON-FINAL ACTION		5	35
37	03/13/2006	REFERENCE CAPTURE ON IDS			
36	03/13/2006	INFORMATION DISCLOSURE STATEMENT (IDS) FILED			
35	01/27/2006	MAIL NON-FINAL REJECTION			
34	01/23/2006	NON-FINAL REJECTION			
33	02/27/2004	INFORMATION DISCLOSURE STATEMENT CONSIDERED			
32	11/07/2005	DATE FORWARDED TO EXAMINER			
31	10/31/2005	RESPONSE AFTER NON-FINAL ACTION			
30	08/10/2005	MAIL NON-FINAL REJECTION			
29	07/25/2005	NON-FINAL REJECTION			
28	05/12/2005	DATE FORWARDED TO EXAMINER			
27	05/06/2005	RESPONSE TO ELECTION / RESTRICTION FILED			
26	05/06/2005	REQUEST FOR EXTENSION OF TIME - GRANTED			
25	03/04/2005	MAIL RESTRICTION REQUIREMENT	268		-1
24	03/03/2005	REQUIREMENT FOR RESTRICTION / ELECTION			
23	01/27/2005	CASE DOCKETED TO EXAMINER IN GAU			

22	06/22/2004	IFW TSS PROCESSING BY TECH CENTER COMPLETE			
21	08/08/2003	PRELIMINARY AMENDMENT			
20	07/16/2003	PRELIMINARY AMENDMENT			
19	06/21/2004	CASE DOCKETED TO EXAMINER IN GAU			
18	02/27/2004	REFERENCE CAPTURE ON IDS			
17	02/27/2004	INFORMATION DISCLOSURE STATEMENT (IDS) FILED			
16	10/01/2003	RECEIPT OF ACKNOWLEDGMENT LETTER			
15	09/03/2003	APPLICATION DISPATCHED FROM OIPE			
14	09/03/2003	APPLICATION IS NOW COMPLETE			
13	06/30/2003	ADDITIONAL APPLICATION FILING FEES			
12	06/30/2003	SMALL ENTITY STATEMENT (37 CFR 1.27)			
11	06/30/2003	A STATEMENT BY ONE OR MORE INVENTORS SATISFYING THE REQUIREMENT UNDER 35 USC 115, OATH OF THE APPLIC			
10	06/16/2003	NOTICE MAILED--APPLICATION INCOMPLETE--FILING DATE ASSIGNED			
8	05/08/2003	REFERRED BY L&R FOR THIRD-LEVEL SECURITY REVIEW. AGENCY REFERRAL LETTER GENERATED			
7	05/08/2003	REFERRED BY L&R FOR THIRD-LEVEL SECURITY REVIEW. AGENCY REFERRAL LETTER GENERATED			
6	05/08/2003	REFERRED BY L&R FOR THIRD-LEVEL SECURITY REVIEW. AGENCY REFERRAL LETTER GENERATED			
5	05/07/2003	IFW SCAN & PACR AUTO SECURITY REVIEW			
4	04/28/2003	CRF IS GOOD TECHNICALLY / ENTERED INTO DATABASE			
3	04/18/2003	IFW SCAN & PACR AUTO SECURITY REVIEW			
2	04/09/2003	CRF DISK HAS BEEN RECEIVED BY PREEXAM / GROUP / PCT			
1	04/09/2003	INITIAL EXAM TEAM NN			

Search Another: Application# [ ] Search

EXPLANATION OF PTA CALCULATION

EXPLANATION OF PTE CALCULATION

To go back use Back button on your browser toolbar.

Back to PALM | ASSIGNMENT | OASIS | Home page

UNITED STATES PATENT AND TRADEMARK OFFICE

CERTIFICATE OF CORRECTION

PATENT	:	7,214,660 B2
DATED	:	May 8, 2007
INVENTOR(S)	:	DeFees, et al.

It is certified that error appears in the above-identified patent and that said Letters Patent is hereby corrected as shown below:

On the cover page,

[*] Notice: Subject to any disclaimer, the term of this patent is extended or adjusted under 35 USC 154(b) by 296 days

Delete the phrase "by 296 days" and insert – by 381 days--

UNITED STATES PATENT AND TRADEMARK OFFICE

Commissioner for Patents
United States Patent and Trademark Office
P.O. Box 1450
Alexandria, VA 22313-1450
www.uspto.gov

AUG 15 2007

WILSON SONSINI GOODRICH & ROSATI
650 PAGE MILL ROAD
PALO ALTO, CA 94304-1050

In re Application of	:
Jonathan W. Nyce et al	:
Serial No.: 10/410,955	: DECISION ON PETITION
Filed: April 9, 2003	:
Attorney Docket No.: 30755-701.301	:

This letter is in response to the Petition under 37 C.F.R. 1.181, filed June 13, 2007, requesting that the rejections made in the Examiner's Answer be designated as new grounds of rejection.

BACKGROUND

Applicants following issuance of a Final Office action filed RCE papers on February 9, 2006, including an unamended set of claims and new arguments for patentability. The examiner issued a new Final Office action on April 12, 2006, in which claims 26-28, 31 and 56-70 were rejected for obvious double patenting over copending SN 10/475,689. A second obvious double patenting rejection of claims 26-28, 31-32 and 56-70 over copending SN 10/923,261 was also set forth. Claims 26-28, 31 and 56-70 were rejected under 35 U.S.C. 103(a) as unpatentable over Koo et al in view of Genaro and '117 (Okutani et al).

Applicants replied by filing a Notice of Appeal on May 31, 2006, and a Pre-Appeal Request for Review accompanied by a Pre-Appeal Conference Brief. A Pre-Appeal Conference was held and the results mailed to applicants on July 27, 2006, indicating that applicants should proceed to the Board of Patent Appeals and Interferences. Applicants then submitted a timely Appeal Brief on December 22, 2006.

On April 18, 2007, the examiner mailed an Examiner's Answer to applicants, setting forth the rejection of claims 26-28, 31 and 56-70 under 35 U.S.C. 103(a) over Koo et al in view of Genaro and '117 (Okutani et al). No mention is made of the rejections set forth for obvious double patenting - as to whether than are maintained or withdrawn. (If withdrawn, then claim 32 would appear to be allowable which is not reflected in the status of the claims.)

On May 31, 2007, the Appeals Center returned the application to the examiner to address missing elements in the Examiner's Answer.

On June 13, 2007, applicants filed this petition.

DISCUSSION

Applicants' petition requests that the Examiner's Answer be designated as containing new grounds of rejection. Applicants' petition then sets forth the status of the claims, and "The grounds of Rejection to be Reviewed on Appeal", followed by arguments. No new ground of rejection is identified by applicants as having been raised by the examiner in the Answer. Rather, the arguments section then states: **"This Reply Brief responds to arguments raised by the Examiner in the Examiner's Answer."** Thus the petition is not a petition, *per se*, but a Reply Brief and merely addresses supposedly new **arguments** raised by the examiner in the Examiner's Answer, not a **new ground of rejection**. The petition then concludes by asking the Board to reverse the examiner's rejections of record. No other relief is requested.

DECISION

The petition is **DISMISSED** as incomplete and as not being a petition.

In view of the return of the Examiner's Answer to the examiner as incomplete, this application is being returned to the examiner for consideration of the reasons for return by the Appeals Center, completion of the Examiner's Answer and indication of the status of the rejections for obvious double patenting set forth in the Final Office action and which are addressed in applicants' Brief, but not the Examiner's Answer. The examiner should also consider applicants' arguments set forth in the petition.

Applicants have been charged a fee of $400.00 for this petition. However, since there is no charge for this petition, the $400.00 will be credited to applicants' Deposit Account No. 23-2415, as directed.

Should there by any questions regarding this decision, please contact Special Program Examiner, William R. Dixon, Jr. by letter addressed to Director, TC 1600, at the address listed above, or by telephone at 571-272-0519 or by facsimile sent to the general Office facsimile number, 571-273-8300.

Bruce M. Kisliuk
Director, Technology Center 1600

UNITED STATES PATENT AND TRADEMARK OFFICE

COMMISSIONER FOR PATENTS
UNITED STATES PATENT AND TRADEMARK OFFICE
P.O. BOX 1450
ALEXANDRIA, VA 22313-1450
www.uspto.gov

Paper No. 6

Nguyen & Associates
16169 Blossom Hill Road
Los Gatos, CA 95032

COPY MAILED
JUL 2 8 2004
OFFICE OF PETITIONS

In re Application of	:	
Lefan Zhong, et al.	:	
Application No. 10/410,982	:	ON PETITION
Filed: April 10, 2003	:	
Attorney Docket No. MEDIAQ-011	:	

This is a decision on the petition under 37 CFR 1.137(b), filed March 31, 2004, to revive the above-identified application.

The petition is **GRANTED**.

Telephone inquiries concerning this decision should be directed to the undersigned at (703) 306-3475.

The application file is being forwarded to the Office of Initial Patent Examination for further processing.

Marianne E. Jenkins
Petitions Examiner
Office of Petitions
Office of the Deputy Commissioner
for Patent Examination Policy

UNITED STATES PATENT AND TRADEMARK OFFICE

Commissioner for Patents
United States Patent and Trademark Office
P.O. Box 1450
Alexandria, VA 22313-1450
www.uspto.gov

Paper No. 8

LOCKE LIDDELL & SAPP LLP
ATTN: SUE COTT
2200 ROSS AVENUE
SUITE 2200
DALLAS, TX 75201-6776

COPY MAILED
MAY 1 8 2004
OFFICE OF PETITIONS

In re Application of
Ramesh K. Sitaraman
Application No.: 10/410,986
Filed: April 10, 2003
Attorney Docket No: 03142 00011.86

: ON PETITION

This is in response to the petition under 37 CFR 1.137(b) filed January 13, 2004.

The petition under 37 CFR 1.137(b) is **granted**.

A "Notice to File Corrected Application Papers" (the "Notice") was mailed on June 10, 2003, allowing a two-month period for reply. Extension of time were available pursuant to 37 CFR 1.136(a). The Notice required replacement drawings to be filed. A proper response was not received within the allowable period, and the application became abandoned on August 11, 2003.

The replacement drawings filed January 13, 2004, are noted and made of record.

This application is being forwarded to the Office of Initial Patent Examination for further processing.

Telephone inquiries regarding this decision should be directed to the undersigned at (703) 305-0010.

Kenya A. McLaughlin
Petitions Attorney
Office of Petitions

UNITED STATES PATENT AND TRADEMARK OFFICE

COMMISSIONER FOR PATENTS
UNITED STATES PATENT AND TRADEMARK OFFICE
P.O. BOX 1450
ALEXANDRIA, VA 22313-1450
www.uspto.gov

Paper No. 6

COZEN O'CONNOR, P.C.
1900 MARKET STREET
PHILADELPHIA PA 19103-3508

COPY MAILED

DEC 17 2003

OFFICE OF PETITIONS

In re Application of
Brian Smith et al.
Application No. 10/410,991
Filed: April 10, 2003
Attorney Docket No. 26.US4.REG

ON PETITION

This is a decision on the petition under 37 CFR 1.182, filed November 18, 2003, to change the order of the names of the inventors.

The petition is **granted**.

The order of the names of the inventors will be changed as follows:

1. Brian Smith
2. Jeffrey Smith

This application is being forwarded to Technology Center 1624 for further examination in due course.

Telephone inquiries concerning this matter may be directed to the undersigned Petitions Attorney at (703) 305-4497.

Patricia Faison-Ball

Patricia Faison-Ball
Senior Petitions Attorney
Office of Petitions

UNITED STATES PATENT AND TRADEMARK OFFICE

COMMISSIONER FOR PATENTS
UNITED STATES PATENT AND TRADEMARK OFFICE
P.O. BOX 1450
ALEXANDRIA, VA 22313-1450
www.uspto.gov

B

AUG - 9 2004

In re Application of	:	
Brian Smith et al	:	NOTICE OF WITHDRAWAL
Serial No. 10/410,991	:	FROM ISSUE
Filed: April 10, 2003	:	UNDER 37 CFR 1.313(b)
For: 5HT2C RECEPTOR MODULATORS	:	

The purpose of this communication is to inform you that the above-identified application is being withdrawn from issue pursuant to 37 CFR 1.313.

The application is being withdrawn to permit reopening of prosecution. The reasons therefore will be communicated to you by the examiner.

PTO records reveal that the issue fee has not been paid. If the issue fee has been submitted, the applicant may request a refund or may request that the fee be credited to a deposit account. However, applicant may wait until the application is either again found allowable or held abandoned. If the application is allowed, upon receipt of a new Notice of Allowance and Issue Fee Due, applicant may request that the previously submitted issue fee be applied toward payment of the issue fee in the amount identified on the new Notice of Allowance and Issue Fee Due. If the application is abandoned, applicant may request either a refund or a credit to a deposit account.

The application is being forwarded to the examiner for action.

Bruce M. Kisliuk, Director
Technology Center 1600

COZEN O'CONNOR, P.C.
1900 MARKET STREET
PHILADELPHIA PA 19103-3508

cc: Allowed Files, PK3-910
Drafting Branch, PK3-910

RECEIVED
OCT 29 2004
OIPE/JCWS

UNITED STATES PATENT AND TRADEMARK OFFICE

B

COMMISSIONER FOR PATENTS
UNITED STATES PATENT AND TRADEMARK OFFICE
P.O. BOX 1450
ALEXANDRIA, VA 22313-1450
www.uspto.gov

AUG - 9 2004

In re Application of	:	
Brian Smith et al	:	NOTICE OF WITHDRAWAL
Serial No. 10/410,991	:	FROM ISSUE
Filed: April 10, 2003	:	UNDER 37 CFR 1.313(b)
For: 5HT2C RECEPTOR MODULATORS	:	

The purpose of this communication is to inform you that the above-identified application is being withdrawn from issue pursuant to 37 CFR 1.313.

The application is being withdrawn to permit reopening of prosecution. The reasons therefore will be communicated to you by the examiner.

PTO records reveal that the issue fee has not been paid. If the issue fee has been submitted, the applicant may request a refund or may request that the fee be credited to a deposit account. However, applicant may wait until the application is either again found allowable or held abandoned. If the application is allowed, upon receipt of a new Notice of Allowance and Issue Fee Due, applicant may request that the previously submitted issue fee be applied toward payment of the issue fee in the amount identified on the new Notice of Allowance and Issue Fee Due. If the application is abandoned, applicant may request either a refund or a credit to a deposit account.

The application is being forwarded to the examiner for action.

Bruce M. Kisliuk, Director
Technology Center 1600

COZEN O'CONNOR, P.C.
1900 MARKET STREET
PHILADELPHIA PA 19103-3508

cc: Allowed Files, PK3-910
Drafting Branch, PK3-910

RECEIVED
OCT 29 2004
OIPE/JCWS

UNITED STATES PATENT AND TRADEMARK OFFICE

Commissioner for Patents
United States Patent and Trademark Office
P.O. Box 1450
Alexandria, VA 22313-1450
www.uspto.gov

COZEN O'CONNOR, P.C.
1900 MARKET STREET
PHILADELPHIA PA 19103-3508

COPY MAILED

APR 22 2005

OFFICE OF PETITIONS

ON PETITION

In re Application of	:
Brian Smith et al	:
Application No. 10/410,991	:
Filed: April 10, 2003	:
Attorney Docket No. 26.US4.REG	:

This is a decision on the petition, filed April 21, 2005, under 37 CFR 1.313(c)(2) to withdraw the above-identified application from issue after payment of the issue fee.

The petition is **GRANTED**.

The above-identified application is withdrawn from issue for consideration of a submission under 37 CFR 1.114 (request for continued examination). See 37 CFR 1.313(c)(2).

Petitioner is advised that the issue fee paid on March 3, 2005 in the above-identified application cannot be refunded. If, however, the above-identified application is again allowed, petitioner may request that it be applied towards the issue fee required by the new Notice of Allowance.[1]

Telephone inquiries should be directed to the undersigned at (571) 272-3208.

The examiner of Technology Center AU 1624 will consider the request for continued examination under 37 CFR 1.114.

Karen Creasy

Karen Creasy
Petitions Examiner
Office of Petitions
Office of the Deputy Commissioner
for Patent Examination Policy

---

[1] The request to apply the issue fee to the new Notice may be satisfied by completing and returning the new Issue Fee Transmittal Form PTOL-85(b), which includes the following language thereon: "Commissioner for Patents is requested to apply the Issue Fee and Publication Fee (if any) or re-apply any previously paid issue fee to the application identified above." Petitioner is advised that, whether a fee is indicated as being due or not, the Issue Fee Transmittal Form **must** be completed and timely submitted to avoid abandonment. Note the language in bold text on the first page of the Notice of Allowance and Fee(s) Due (PTOL-85).

UNITED STATES PATENT AND TRADEMARK OFFICE

Commissioner for Patents
United States Patent and Trademark Office
P.O. Box 1450
Alexandria, VA 22313-1450
www.uspto.gov

FISH & RICHARDSON P.C.
P.O. BOX 1022
MINNEAPOLIS MN 55440-1022

MAILED
JUL 07 2009
OFFICE OF PETITIONS

In re Patent No. 6,953,787 :
Issue Date: October 11, 2005 :
Application No. 10/410,991 : NOTICE UNDER 37 CFR. 1.28(c)
Filed: April 10, 2003 :
Attorney Docket No. 20750-037001 :
026.US4.REG

This is a notice regarding your request for acceptance of a fee deficiency submission under 37 CFR 1.28. On September 01, 1998, the court of Appeals for the Federal Circuit held that 37 CFR 1.28(c) is the sole provision governing the time for correction of the erroneous payment of the issue fee as a small entity. **See DH Technology v. Synergystex International, Inc. 154 F.3d 1333, 47 USPQ2d 1865 (Fed. Cir. Sept. 1, 1998).**

The Office no longer investigates or rejects original or reissue applications under 37 CFR 1.56. **1098 Off. Gaz. Pat. Office 502 (January 3, 1989).** Therefore, nothing in this Notice is intended to imply that an investigation was done.

Your fee deficiency submission under 37 CFR 1.28 is hereby **ACCEPTED**.

This application is no longer entitled to small entity status. Accordingly, all future fees paid in this application must be paid at the large entity rate.

There is no indication that the person signing the petition was ever given a power of attorney to prosecute the application. If the person signing the petition desires to receive future correspondence regarding this application, the appropriate power of attorney documents must be submitted. While a courtesy copy of this decision is being mailed to the person signing the petition, all future correspondence will be directed to the address currently of record until appropriate instructions are received.

Inquiries related to this communication should be directed to the Michelle R. Eason at (571) 272-4231.

Thurman Page
Petitions Examiner
Office of Petitions

cc: **KENDAL M. SHEETS**
CPA NORTH AMERICA, LLC
225 REINEKERS LANE, SUITE 400
ALEXANDRIA, VA 22314

UNITED STATES PATENT AND TRADEMARK OFFICE

Commissioner for Patents
United States Patent and Trademark Office
P.O. Box 1450
Alexandria, VA 22313-1450
www.uspto.gov

HAYES SOLOWAY P.C.
3450 E. SUNRISE DRIVE, SUITE 140
TUCSON AZ 85718

COPY MAILED

DEC 2 0 2007

OFFICE OF PETITIONS

In re Application of	:	
Duck	:	
Application No. 10/410,993	:	DECISION ON PETITION
Filed: April 10, 2003	:	
Attorney Docket No. HARTING P202-05	:	

This is a decision on the petition under 37 CFR 1.182, filed, September 13, 2007, to correct the spelling of the name of inventor "Dueck" to -- Duck --.

The petition is **GRANTED**.

Office records have been corrected to reflect the correct spelling of the above-named inventor. A corrected Filing Receipt, which sets forth the correct spelling of the above-named inventor, accompanies this decision on petition.

The issue fee in this case was paid on September 13, 2007. Therefore, the printing of the patent may have progressed to the point where the correct spelling of the inventor's name could not be included on the front page of the Letters Patent. In such event, petitioner may request a certificate of correction pursuant to the provisions of 37 CFR 1.323 and pay the required fee of $100.

A corrected Notice of Allowance will not be mailed.

Any questions concerning this matter may be directed to undersigned at (571) 272-3215.

The matter is being referred to the Office of Publications for issuance into a patent.

Charlema Grant
Petitions Office
Office of Petitions

ATTACHMENT: Corrected Filing Receipt

UNITED STATES PATENT AND TRADEMARK OFFICE

UNITED STATES DEPARTMENT OF COMMERCE
United States Patent and Trademark Office
Address: COMMISSIONER FOR PATENTS
P.O. Box 1450
Alexandria, Virginia 22313-1450
www.uspto.gov

APPLICATION NUMBER	FILING or 371(c) DATE	GRP ART UNIT	FIL FEE REC'D	ATTY.DOCKET.NO	TOT CLAIMS	IND CLAIMS
10/410,993	04/10/2003	2833	1050	HARTING P202-05	4	1

CONFIRMATION NO. 7829

CORRECTED FILING RECEIPT

27667
HAYES SOLOWAY P.C.
3450 E. SUNRISE DRIVE, SUITE 140
TUCSON, AZ 85718

OC000000026653855

Date Mailed: 12/20/2007

Receipt is acknowledged of this non-provisional patent application. The application will be taken up for examination in due course. Applicant will be notified as to the results of the examination. Any correspondence concerning the application must include the following identification information: the U.S. APPLICATION NUMBER, FILING DATE, NAME OF APPLICANT, and TITLE OF INVENTION. Fees transmitted by check or draft are subject to collection. Please verify the accuracy of the data presented on this receipt. **If an error is noted on this Filing Receipt, please write to the Office of Initial Patent Examination's Filing Receipt Corrections. Please provide a copy of this Filing Receipt with the changes noted thereon. If you received a "Notice to File Missing Parts" for this application, please submit any corrections to this Filing Receipt with your reply to the Notice. When the USPTO processes the reply to the Notice, the USPTO will generate another Filing Receipt incorporating the requested corrections**

Applicant(s)

Jakob Duck, Espelkamp, GERMANY;
Martin Kleine, Hille, GERMANY;
Andreas Nass, Warmsen, GERMANY;
Dirk Schmieding, Bad Essen, GERMANY;

Assignment For Published Patent Application

HARTING Electric GmbH & Co. KG

Power of Attorney:

Oliver Hayes--15867
Norman Soloway--24315
William Hennessey--32032
Peter Murphy--43822
Kevin Drucker--47537
Jeffrey Placker--47862
Peter Nieves--48173
Ashley Kirk--51261

Domestic Priority data as claimed by applicant

Foreign Applications

GERMANY 202 05 787.9 04/13/2002

If Required, Foreign Filing License Granted: 06/17/2003

The country code and number of your priority application, to be used for filing abroad under the Paris Convention, is **US 10/410,993**

Projected Publication Date: Not Applicable

Non-Publication Request: No

Early Publication Request: No
Title

MODULAR PLUG CONNECTOR

Preliminary Class

439

PROTECTING YOUR INVENTION OUTSIDE THE UNITED STATES

Since the rights granted by a U.S. patent extend only throughout the territory of the United States and have no effect in a foreign country, an inventor who wishes patent protection in another country must apply for a patent in a specific country or in regional patent offices. Applicants may wish to consider the filing of an international application under the Patent Cooperation Treaty (PCT). An international (PCT) application generally has the same effect as a regular national patent application in each PCT-member country. The PCT process **simplifies** the filing of patent applications on the same invention in member countries, but **does not result** in a grant of "an international patent" and does not eliminate the need of applicants to file additional documents and fees in countries where patent protection is desired.

Almost every country has its own patent law, and a person desiring a patent in a particular country must make an application for patent in that country in accordance with its particular laws. Since the laws of many countries differ in various respects from the patent law of the United States, applicants are advised to seek guidance from specific foreign countries to ensure that patent rights are not lost prematurely.

Applicants also are advised that in the case of inventions made in the United States, the Director of the USPTO must issue a license before applicants can apply for a patent in a foreign country. The filing of a U.S. patent application serves as a request for a foreign filing license. The application's filing receipt contains further information and guidance as to the status of applicant's license for foreign filing.

Applicants may wish to consult the USPTO booklet, "General Information Concerning Patents" (specifically, the section entitled "Treaties and Foreign Patents") for more information on timeframes and deadlines for filing foreign patent applications. The guide is available either by contacting the USPTO Contact Center at 800-786-9199, or it can be viewed on the USPTO website at http://www.uspto.gov/web/offices/pac/doc/general/index.html.

For information on preventing theft of your intellectual property (patents, trademarks and copyrights), you may wish to consult the U.S. Government website, http://www.stopfakes.gov. Part of a Department of Commerce initiative, this website includes self-help "toolkits" giving innovators guidance on how to protect intellectual property in specific countries such as China, Korea and Mexico. For questions regarding patent enforcement issues, applicants may call the U.S. Government hotline at 1-866-999-HALT (1-866-999-4158).

LICENSE FOR FOREIGN FILING UNDER

Title 35, United States Code, Section 184

Title 37, Code of Federal Regulations, 5.11 & 5.15

GRANTED

The applicant has been granted a license under 35 U.S.C. 184, if the phrase "IF REQUIRED, FOREIGN FILING LICENSE GRANTED" followed by a date appears on this form. Such licenses are issued in all applications where

the conditions for issuance of a license have been met, regardless of whether or not a license may be required as set forth in 37 CFR 5.15. The scope and limitations of this license are set forth in 37 CFR 5.15(a) unless an earlier license has been issued under 37 CFR 5.15(b). The license is subject to revocation upon written notification. The date indicated is the effective date of the license, unless an earlier license of similar scope has been granted under 37 CFR 5.13 or 5.14.

This license is to be retained by the licensee and may be used at any time on or after the effective date thereof unless it is revoked. This license is automatically transferred to any related applications(s) filed under 37 CFR 1.53(d). This license is not retroactive.

The grant of a license does not in any way lessen the responsibility of a licensee for the security of the subject matter as imposed by any Government contract or the provisions of existing laws relating to espionage and the national security or the export of technical data. Licensees should apprise themselves of current regulations especially with respect to certain countries, of other agencies, particularly the Office of Defense Trade Controls, Department of State (with respect to Arms, Munitions and Implements of War (22 CFR 121-128)); the Bureau of Industry and Security, Department of Commerce (15 CFR parts 730-774); the Office of Foreign AssetsControl, Department of Treasury (31 CFR Parts 500+) and the Department of Energy.

NOT GRANTED

No license under 35 U.S.C. 184 has been granted at this time, if the phrase "IF REQUIRED, FOREIGN FILING LICENSE GRANTED" DOES NOT appear on this form. Applicant may still petition for a license under 37 CFR 5.12, if a license is desired before the expiration of 6 months from the filing date of the application. If 6 months has lapsed from the filing date of this application and the licensee has not received any indication of a secrecy order under 35 U.S.C. 181, the licensee may foreign file the application pursuant to 37 CFR 5.15(b).

UNITED STATES PATENT AND TRADEMARK OFFICE

Commissioner for Patents
United States Patent and Trademark Office
P.O. Box 1450
Alexandria, VA 22313-1450
www.uspto.gov

HAYES SOLOWAY P.C.
3450 E. SUNRISE DRIVE, SUITE 140
TUCSON AZ 85718

COPY MAILED

MAR 3 1 2008

OFFICE OF PETITIONS

In re Patent: 7,322,842	:	
Issued: January 29, 2008	:	
Application No. 10/410,993	:	DECISION ON PETITION
Filed: April 10, 2003	:	
Attorney Docket No. HARTING P202-05	:	

This is a decision on the renewed petition under 37 CFR 1.182, filed, January 8, 2008, to correct the spelling of the name of inventor "Dück"

The petition is **DISMISSED AS MOOT**.

A review of the Patent shows that the Patent was printed with the name "Dück". A corrected filing receipt cannot reflect "Dück".

Any questions concerning this matter may be directed to the undersigned at (571) 272-3215.

The file is being referred to the Files Repository.

Charlema Grant
Petitions Attorney
Office of Petitions

UNITED STATES PATENT AND TRADEMARK OFFICE

Commissioner for Patents
United States Patent and Trademark Office
P.O. Box 1450
Alexandria, VA 22313-1450
www.uspto.gov

COPY MAILED

NOV 1 3 2009

OFFICE OF PETITIONS

NOVO NORDISK, INC.
INTELLECTUAL PROPERTY DEPARTMENT
100 COLLEGE ROAD WEST
PRINCETON, NJ 08540

In re Patent No.: 7,157,277	:	
Issued: January 2, 2007	:	
Application No. 10/410,997	:	NOTICE
Filed: April 9, 2003	:	
Attorney Docket No. 101961-5059-US	:	

This is a notice regarding your request for acceptance of a fee deficiency submission under 37 CFR 1.28.

The Office no longer investigates or rejects original or reissue patent under 37 CFR 1.56. **1098 Off. Gaz. Pat. Office 502 (January 3, 1989)**. Therefore, nothing in this Notice is intended to imply that an investigation was done.

Your fee deficiency submission under 37 CFR 1.28 is hereby **ACCEPTED**.

This application/patent is no longer entitled to small entity status. Accordingly, all future fees paid in this patent must be paid at the large entity rate.

Inquiries related to this communication should be directed to the undersigned at (571) 272-3204.

Sherry D. Brinkley
Petitions Examiner
Office of Petitions

UNITED STATES PATENT AND TRADEMARK OFFICE

COMMISSIONER FOR PATENTS
UNITED STATES PATENT AND TRADEMARK OFFICE
P.O. BOX 1450
ALEXANDRIA, VA 22313-1450
www.uspto.gov

AUG 18 2004

In re Application of
Stephen C. Kohs *et al*
Application No. 10/411,003
Filed: April 9, 2003
Attorney Docket No. 32245.184

DECISION ON PETITION

This is a decision on the petition to make special filed on June 30, 2003. The $130.00 petition fee has been received.

The petition is granted.

The petition to make special is based upon the existence of an actual infringement. A review of the petition shows that all of the requirements established in MPEP § 708.02(II) for a petition on that grounds have been satisfied. Therefore, petitioner is entitled to have this application handled special in accordance with MPEP § 708.02, subsection styled "Handling of Petitions to Make Special".

Accordingly, the examiner will treat this application as special throughout its prosecution. Prior to the next action on the merits, the examiner will conduct a rigorous search for potentially interfering applications. The interference search will be brought up to date prior to each successive action.

The Supervisory Patent Examiner of Patent Examining Art Unit 3748 is being advised of the granting of the instant petition, and will in turn advise the examiner to whom the application is assigned of the special status of this application and the need for action consistent with this Decision.

PETITION GRANTED.

Stephen Marcus, Special Program Examiner,
Technology Center 3700

Briggs and Morgan, P.A.
2200 IDS Center
Minneapolis, MN 55402

UNITED STATES PATENT AND TRADEMARK OFFICE

Commissioner for Patents
United States Patent and Trademark Office
P.O. Box 1450
Alexandria, VA 22313-1450
www.uspto.gov

LEONARD TACHNER, A PROFESSIONAL LAW CORPORATION
17961 SKY PARK CIRCLE, SUITE 38-E
IRVINE CA 92614

COPY MAILED
JUL 14 2006
OFFICE OF PETITIONS

In re Application of :
Wang :
Application No. 10/411,007 : ON PETITION
Filed: April 9, 2003 :
Attorney Docket Number: FP03006

This is a decision on the petition under 37 CFR 1.137(b), filed June 19, 2006, to revive the above-identified application.

This above-identified application became abandoned for failure to timely file a reply to the non-final Office Action of May 12, 2005. The non-final Office Action set a three (3) month shortened statutory period for reply. No extensions of time were obtained under the provisions of 37 CFR §1.136(a). Accordingly, this application became abandoned on August 13, 2005. A Notice of Abandonment was mailed on December 20, 2005.

This Petition is hereby **Granted**.

The office hereby acknowledges the receipt of the amendment submitted with the instant petition.

This application is being forwarded to Technology Center 1700 for further processing.

Telephone inquiries concerning this matter should be directed to the undersigned at (571) 272-3215.

Charlema R. Grant
Petitions Attorney
Office of Petitions

UNITED STATES PATENT AND TRADEMARK OFFICE

Commissioner for Patents
United States Patent and Trademark Office
P.O. Box 1450
Alexandria, VA 22313-1450
www.uspto.gov

JUN 2 2005

FULBRIGHT & JAWORSKI, LLP
666 Fifth Avenue
New York, NY 10103-3198

In re application of Herbert Gandel et al. Application No. 10/411,020 Filed: April 09, 2003 For: METHOD FOR THE STANDARDIZATION AND SYNDICATION OF BUSINESS TRANSACTIONS	: : : :	**DECISION ON PETITION TO MAKE SPECIAL (APPLICANT'S AGE)**

This is a decision on the petition submitted on May 11, 2005 under 37 CFR 1.102 (c) to make the above-identified application special under the accelerated examination procedure set forth in MPEP 708.02, Section IV: Applicant's Age.

The petition is **GRANTED**.

An application may be accorded special status upon the filing of a petition providing evidence showing that the applicant is at least 65 years old. Such a showing may be provided by evidence such as a birth certificate or a statement from the applicant.

The evidence submitted with the petition is a passport indicating Mr. Gandel is at least 65 years of age.

The examiner is directed (1) to make an interference search for possible interfering applications, (2) to promptly examine this application out of turn, and (3) if any interfering application is discovered, to examine such application simultaneously and state in the first official letter of such application that it is being taken out of turn because of a possible interference.

Petitioner is advised that this application will continue to be special, throughout its entire prosecution and pendency, including interference or appeal, if any, only if petitioner makes a prompt ***bona fide*** effort, in response to each Office action, to place the application in condition for allowance, even if it is necessary to conduct an interview with the examiner to accomplish this purpose.

SUMMARY: Petition to Make Special **GRANTED**.

Kenneth J. Dorner
Special Programs Examiner
Technology Center 3600
(571) 272-6587

KJD/slb: 05/25/05

UNITED STATES PATENT AND TRADEMARK OFFICE

Commissioner for Patents
United States Patent and Trademark Office
P.O. Box 1450
Alexandria, VA 22313-1450
www.uspto.gov

CHAPIN & HUANG L.L.C.
WESTBOROUGH OFFICE PARK
1700 WEST PARK DRIVE, SUITE 120
WESTBOROUGH, MA 01581

COPY MAILED

MAR 17 2005

OFFICE OF PETITIONS

In re Application of

Creekmore, et al.

Application No. 10/411,022

Filed: April 10, 2003

Attorney Docket No. CIS02-56(6864)

: DECISION ON

: PETITION

This is a decision on the petition under 37 CFR 1.137(b), filed February 7, 2005, to revive the above-identified application.

The petition is **granted**.

This application became abandoned on November 13, 2004, for failure to file timely new corrected drawings as required by the Notice of Allowability mailed August 12, 2004. The aforementioned notice set forth a three (3) month statutory period for reply. No reply was received within the allowable period. A Notice of Abandonment was mailed on January 3, 2005.

The new corrected drawings, filed February 7, 2005, are noted.

The application is being forward to the Office of Patent Publication for processing into a patent.

Telephone inquiries concerning this matter may be directed to the undersigned at (571) 272-3222.

Kenya A. McLaughlin
Petitions Attorney
Office of Petitions

UNITED STATES PATENT AND TRADEMARK OFFICE

Commissioner for Patents
United States Patent and Trademark Office
P.O. Box 1450
Alexandria, VA 22313-1450
www.uspto.gov

MORGAN, LEWIS & BOCKIUS LLP (SF)
2 PALO ALTO SQUARE
3000 EL CAMINO REAL, SUITE 700
PALO ALTO CA 94306

COPY MAILED

DEC 0 4 2006

OFFICE OF PETITIONS

ON PETITION

In re Application of	:	
Shawn Defrees et al	:	
Application No. 10/411,044	:	
Filed: April 9, 2003	:	
Attorney Docket No. 040853-01-5064	:	

This is a decision on the petition, filed April 21, 2006, under 37 CFR 1.181(a) to Withdraw Holding of Abandonment or in the alternative a petition to Revive under 37 CFR 1.137(b) as unintentional delay.

The petition under 37 CFR 1.181(a) is **GRANTED**.

The petition under 37 CFR 1.137(b) is dismissed in view of the granting of the petition under 37 CFR 1.181(a).

The application was held abandoned for failure to timely reply to the Notice mailed September 28, 2005.

The petition states that a third preliminary amendment was received by the USPTO on June 28, 2004. An Office action in the form of a Restriction Requirement was mailed on September 28, 2005. **However, the Restriction Requirement was directed to cancelled claims 1-111, rather than presented claims 112-186 in the amendment filed June 28, 2004.** To support this assertion, the petitioner has submitted a copy of the amendment filed June 28, 2004, along with confirmation of successful transmission on November 10, 2005.

In view of the above, the holding of abandonment is hereby withdrawn and the application restored to pending status.

Telephone inquiries concerning this decision should be directed to the undersigned at (571) 272-3208.

This application is being forwarded to Technology Center AU 1654.

Karen Creasy

Karen Creasy
Petitions Examiner
Office of Petitions

UNITED STATES
PATENT AND
TRADEMARK OFFICE

Commissioner for Patents
Washington, DC 20231
www.uspto.gov

9/16/03

Hamilton Brook Smith and Reynolds P C
530 Virginia Road
P O Box 9133
Concord MA 01742-9133

Dear Applicant:

The Box PGPub replacement drawings for application number 10/411,076 received on 8/4/03 by the U. S. Patent and Trademark Office will be included for patent publication.

Telephone inquiries should be directed to Customer Service, Office of Initial Patent Examination, at 703-308-1202.

UNITED STATES
PATENT AND
TRADEMARK OFFICE

Commissioner for Patents
Washington, DC 20231
www.uspto.gov

Signature of Reviewer, Office of Initial Patent Examination

UNITED STATES PATENT AND TRADEMARK OFFICE

Commissioner for Patents
United States Patent and Trademark Office
P.O. Box 1450
Alexandria, VA 22313-1450
www.uspto.gov
DIW Jun-05

DELTAGEN, INC.
1031 BING STREET
SAN CARLOS CA 94070

COPY MAILED

JUN 15 2005

OFFICE OF PETITIONS

In re Application of	:	
Thadd C. Reeder	:	DECISION REFUSING STATUS
Application No. 10/411,079	:	UNDER 37 CFR 1.47(b)
Filed: 10 April, 2003	:	
Atty Docket No. U 014530-5	:	

This is in response to the petition filed on 4 August, 2003, under 37 CFR 1.47(b). This is also a decision on the petition to withdraw the holding of abandonment filed on 18 April, 2005.

The petition to withdraw the holding of abandonment is **GRANTED**.

The petition under 37 CFR 1.47(b) is **DISMISSED**.

Rule 47 applicant is given TWO MONTHS from the mailing date of this decision to reply, correcting the below-noted deficiencies. Any reply should be entitled "Request for Reconsideration of Petition Under 37 CFR 1.47(b)," and should only address the deficiencies noted below, except that the reply may include an oath or declaration executed by the non-signing inventor. **FAILURE TO RESPOND WILL RESULT IN ABANDONMENT OF THE APPLICATION.** Extensions of time may be obtained in accordance with 37 CFR 1.136(a).

The above-identified application was filed on 10 April, 2003, without an executed oath or declaration. Accordingly, on 12 June, 2003, Initial Patent Examination Division mailed a Notice to File Missing Parts of Nonprovisional Application requiring the statutory basic filing fee, an oath or declaration, and a surcharge for their late filing. A two (2) month period for reply was set.

In response, on 4 August, 2004 (certificate of mailing 1 August, 2004), petitioner filed the present petition and petition fee. The surcharge and basic filing fee were also filed. On 27 September, 2004, a Notice of Abandonment was mailed.

The petition to withdraw the holding of abandonment was filed on 18 April, 2005. Petitioner asserts that a timely response to the Notice mailed on 12 June, 2003, was filed on 4 August, 2003.

As the papers filed on 4 August, 2004, appear to be a *bona fide* reply to the Notice mailed on 12 June, 2003, the holding of abandonment is withdrawn, and the Notice of Abandonment mailed on 27 September, 2004, is vacated.

With regards to the petition under 37 CFR 1.47(b), petitioner asserts that the non-signing inventor refused to sign papers in the prior filed international application, of which the present application is a continuation, and that a petition under 37 CFR 1.425 was granted.

A grantable petition under 37 CFR 1.47(b) requires:

(1) proof that the non-signing inventor cannot be reached or refuses to sign the oath or declaration after having been presented with the application papers (specification, claims and drawings);

(2) an acceptable oath or declaration in compliance with 35 U.S.C. §§ 115 and 116;

(3) the petition fee;

(4) a statement of the last known address of the non-signing inventor;

(5) proof of proprietary interest, and

(6) proof of irreparable damage.

The petition lacks items (1), (2), (4), (5), and (6).

In regards to item (1), petitioner has not shown that joint inventor Garwood was sent or presented with a copy of the application as filed (specification, including claims, drawings, if any, and the declaration).[1]

37 CFR 1.63(d)(3) states, in pertinent part:

> Where the executed oath or declaration of which a copy is submitted for a continuation or divisional application was originally filed in a prior application accorded status under § 1.47, the copy of the executed oath or declaration for such prior application must be accompanied by:
>
> (i) A copy of the decision granting a petition to accord § 1.47 status to the prior application, unless all inventors or legal representatives have filed an

[1] MPEP 409.03(d).

> oath or declaration to join in an application accorded status under § 1.47 of which the continuation or divisional application claims a benefit under 35 U.S.C. 120, 121, or 365(c)…

In this regard, it is noted that although a petition under 37 CFR 1.425 was granted in the prior international application, Rule 47 status was not granted in the prior application. Additionally, no declaration under 37 CFR 1.63 from the prior application has been supplied. As such, the mere fact that a petition under 37 CFR 1.425 was granted in the prior application does not permit the Office to granted Rule 47(b) status in the present application. Rather, petitioners must show that the requirements of 37 CFR 1.47(b) have been met.

As such, in order for Rule 47(b) status to be granted in this application, petitioner must show that the non-signing inventor was presented with the application papers (specification, including the claims, drawings, if any, and the declaration) for the present application.

Petitioner may show proof that a copy of the application was sent or given to the non-signing inventors for review by providing a copy of the cover letter transmitting the application papers (specification, including claims, drawings, if any, and the declaration) to the non-signing inventors or details given in an affidavit or declaration of facts by a person having first-hand knowledge of the details.

If the application is returned as undeliverable, petitioner should present a copy of the envelope showing that the application sent to the last known address of the non-signing inventors was returned as undeliverable by the post office.

Likewise, before a *bona fide* refusal to sign the declaration can be alleged, petitioner must show that a copy of the application was sent or given to the non-signing inventor. If the inventor refuses in writing, petitioners must submit a copy of that written refusal with any renewed petition. If the refusal was made orally to a person, then that person must provide details of the refusal in an affidavit or declaration of fact.

In regards to item (2), an oath or declaration in compliance with 37 CFR 1.63 must be supplied. The declaration must include the name, citizenship, residence, and mailing address of the non-signing inventor. If the inventor refuses to sign the declaration, the declaration must be signed by an officer of the

corporation (president, vice president, secretary, or treasurer) on behalf of and as agent for the non-signing inventor. The officer must identify his or her title in the declaration. If the declaration is not signed by an officer of the corporation, then proof of the authority of the person signing on behalf of the corporation must be submitted (See MPEP 409.03(b)).

With regards to item (4), petitioner has not presented a statement of the last known address of the non-signing inventor. The last known address is that address at which the inventor customarily receives mail.[2] Ordinarily, the last known address will be the last known residence of the non-signing inventor.[3] If a different last known address is determined for one or more of the joint inventors, that address should be provided with any renewed petition.

In regard to item (5), petitioner has not shown sufficient proprietary interest in the subject matter to justify filing of the application under 37 CFR 1.47(b).[4] Petitioner may provide proof by showing a copy of the employment agreement between the non-signing inventor and the Rule 1.47(b) applicant (company); a copy of an assignment agreement showing that the invention disclosed in the application is assigned to the Rule 1.47(b) applicant, or a legal memorandum signed by an attorney familiar with the law of the jurisdiction stating that a court of competent jurisdiction would by the weight of authority in that jurisdiction award the title of the invention to the Rule 1.47(b) applicant.

In regards to item (6), petitioner must establish irreparable damages in accordance with MPEP 409.03(g). A statement by applicant that the filing is necessary to prevent irreparable damage or to preserve the rights of the parties is sufficient.

Further correspondence with respect to this matter should be addressed as follows:

By mail: Mail Stop Petition
Commissioner for Patents
P.O. Box 1450
Alexandria, VA 22313-1450

---

[2] See MPEP 605.03.

[3] MPEP 409.03(e).

[4] MPEP 409.03(f).

By FAX: (703) 872-9306
Attn: Office of Petitions

By hand: Customer Service Window
Mail Stop Petition
Randolph Building
401 Dulany Street
Alexandria, VA 22134

Telephone inquiries related to this decision should be directed to the undersigned at (571)272-3231.

D Wood

Douglas I. Wood
Senior Petitions Attorney
Office of Petitions

UNITED STATES PATENT AND TRADEMARK OFFICE

Commissioner for Patents
United States Patent and Trademark Office
P.O. Box 1450
Alexandria, VA 22313-1450
www.uspto.gov
DIW Aug-05

THE GILLETTE COMPAMY
PRUDENTIAL TOWER BUILDING
BOSTON MA 02199

COPY MAILED

AUG 1 5 2005

OFFICE OF PETITIONS

In re Application of	:	CORRECTED
Matthew S. Garwood	:	DECISION ON PETITION
Application No. 10/411,079	:	AND
Filed: 10 April, 2003	:	DECISION REFUSING STATUS
Atty Docket No. U014530-5	:	

This is a corrected decision in response to the petition filed on 4 August, 2003, under 37 CFR 1.47(b). This is also a decision on the petition to withdraw the holding of abandonment filed on 18 April, 2005.

The petition to withdraw the holding of abandonment is **GRANTED**.

The petition under 37 CFR 1.47(b) is **DISMISSED**.

Rule 47 applicant is given TWO MONTHS from the mailing date of this decision to reply, correcting the below-noted deficiencies. Any reply should be entitled "Request for Reconsideration of Petition Under 37 CFR 1.47(b)," and should only address the deficiencies noted below, except that the reply may include an oath or declaration executed by the non-signing inventor. **FAILURE TO RESPOND WILL RESULT IN ABANDONMENT OF THE APPLICATION.** Extensions of time may be obtained in accordance with 37 CFR 1.136(a).

The above-identified application was filed on 10 April, 2003, without an executed oath or declaration. Accordingly, on 12 June, 2003, Initial Patent Examination Division mailed a Notice to File Missing Parts of Nonprovisional Application requiring the statutory basic filing fee, an oath or declaration, and a surcharge for their late filing. A two (2) month period for reply was set.

In response, on 4 August, 2004 (certificate of mailing 1 August, 2004), petitioner filed the present petition and petition fee. The surcharge and basic filing fee were also filed. On 27 September, 2004, a Notice of Abandonment was mailed.

The petition to withdraw the holding of abandonment was filed on 18 April, 2005. Petitioner asserts that a timely response to the Notice mailed on 12 June, 2003, was filed on 4 August, 2003.

As the papers filed on 4 August, 2003, appear to be a *bona fide* reply to the Notice mailed on 12 June, 2003, the holding of abandonment is withdrawn, and the Notice of Abandonment mailed on 27 September, 2004, is vacated.

With regards to the petition under 37 CFR 1.47(b), petitioner asserts that the non-signing inventor refused to sign papers in the prior filed international application, of which the present application is a continuation, and that a petition under 37 CFR 1.425 was granted.

A grantable petition under 37 CFR 1.47(b) requires:

(1) proof that the non-signing inventor cannot be reached or refuses to sign the oath or declaration after having been presented with the application papers (specification, claims and drawings);

(2) an acceptable oath or declaration in compliance with 35 U.S.C. §§ 115 and 116;

(3) the petition fee;

(4) a statement of the last known address of the non-signing inventor;

(5) proof of proprietary interest, and

(6) proof of irreparable damage.

The petition lacks items (1), (2), (4), (5), and (6).

In regards to item (1), petitioner has not shown that joint inventor Garwood was sent or presented with a copy of the application as filed (specification, including claims, drawings, if any, and the declaration).[1]

37 CFR 1.63(d)(3) states, in pertinent part:

> Where the executed oath or declaration of which a copy is submitted for a continuation or divisional application was originally filed in a prior application accorded status under § 1.47, the copy of the executed oath or declaration for such prior application must be accompanied by:
>
> (i) A copy of the decision granting a petition to accord § 1.47 status to the prior application, unless all inventors or legal representatives have filed an

[1] MPEP 409.03(d).

> oath or declaration to join in an application accorded status under § 1.47 of which the continuation or divisional application claims a benefit under 35 U.S.C. 120, 121, or 365(c)…

In this regard, it is noted that although a petition under 37 CFR 1.425 was granted in the prior international application, Rule 47 status was not granted in the prior application. Additionally, no declaration under 37 CFR 1.63 from the prior application has been supplied. As such, the mere fact that a petition under 37 CFR 1.425 was granted in the prior application does not permit the Office to granted Rule 47(b) status in the present application. Rather, petitioner must show that the requirements of 37 CFR 1.47(b) have been met.

As such, in order for Rule 47(b) status to be granted in this application, petitioner must show that the non-signing inventor was presented with the application papers (specification, including the claims, drawings, if any, and the declaration) for the present application.

Petitioner may show proof that a copy of the application was sent or given to the non-signing inventors for review by providing a copy of the cover letter transmitting the application papers (specification, including claims, drawings, if any, and the declaration) to the non-signing inventors or details given in an affidavit or declaration of facts by a person having first-hand knowledge of the details.

If the application is returned as undeliverable, petitioner should present a copy of the envelope showing that the application sent to the last known address of the non-signing inventors was returned as undeliverable by the post office.

Likewise, before a *bona fide* refusal to sign the declaration can be alleged, petitioner must show that a copy of the application was sent or given to the non-signing inventor. If the inventor refuses in writing, petitioner must submit a copy of that written refusal with any renewed petition. If the refusal was made orally to a person, then that person must provide details of the refusal in an affidavit or declaration of fact.

In regards to item (2), an oath or declaration in compliance with 37 CFR 1.63 must be supplied. The declaration must include the name, citizenship, residence, and mailing address of the non-signing inventor. If the inventor refuses to sign the declaration, the declaration must be signed by an officer of the

corporation (president, vice president, secretary, or treasurer) on behalf of and as agent for the non-signing inventor. The officer must identify his or her title in the declaration. If the declaration is not signed by an officer of the corporation, then proof of the authority of the person signing on behalf of the corporation must be submitted (See MPEP 409.03(b)).

With regards to item (4), petitioner has not presented a statement of the last known address of the non-signing inventor. The last known address is that address at which the inventor customarily receives mail.[2] Ordinarily, the last known address will be the last known residence of the non-signing inventor.[3] If a different last known address is determined for one or more of the joint inventors, that address should be provided with any renewed petition.

In regard to item (5), petitioner has not shown sufficient proprietary interest in the subject matter to justify filing of the application under 37 CFR 1.47(b).[4] Petitioner may provide proof by showing a copy of the employment agreement between the non-signing inventor and the Rule 1.47(b) applicant (company); a copy of an assignment agreement showing that the invention disclosed in the application is assigned to the Rule 1.47(b) applicant, or a legal memorandum signed by an attorney familiar with the law of the jurisdiction stating that a court of competent jurisdiction would by the weight of authority in that jurisdiction award the title of the invention to the Rule 1.47(b) applicant.

In regards to item (6), petitioner must establish irreparable damages in accordance with MPEP 409.03(g). A statement by applicant that the filing is necessary to prevent irreparable damage or to preserve the rights of the parties is sufficient.

It is noted that the address on the petition is different than the correspondence address listed in Office records. As such, a courtesy copy of this decision will be mailed to the address listed in the petition. All future correspondence, however, will be mailed solely to the address of record.

Further correspondence with respect to this matter should be addressed as follows:

---

[2] See MPEP 605.03.

[3] MPEP 409.03(e).

[4] MPEP 409.03(f).

By mail: Mail Stop Petition
Commissioner for Patents
P.O. Box 1450
Alexandria, VA 22313-1450

By FAX: (571) 273-8300
Attn: Office of Petitions

By hand: Customer Service Window
Mail Stop Petition
Randolph Building
401 Dulany Street
Alexandria, VA 22134

Telephone inquiries related to this decision should be directed to the undersigned at (571)272-3231.

Douglas I. Wood
Senior Petitions Attorney
Office of Petitions

cc: Peter D. Galloway
Ladas and Perry
26 West 61st Street
New York NY 10023

UNITED STATES PATENT AND TRADEMARK OFFICE

Commissioner for Patents
United States Patent and Trademark Office
P.O. Box 1450
Alexandria, VA 22313-1450
www.uspto.gov
DIW Dec-05

THE GILLETTE COMPAMY
PRUDENTIAL TOWER BUILDING
BOSTON MA 02199

COPY MAILED

DEC 0 8 2005

OFFICE OF PETITIONS

In re Application of	:
Matthew S. Garwood	: DECISION REFUSING STATUS
Application No. 10/411,079	: UNDER 37 CFR 1.47(b)
Filed: 10 April, 2003	:
Atty Docket No. U014530-5	:

This is a decision in response to the paper filed on 18 November, 2005, which is treated as a renewed petition under 37 CFR 1.47(b).

The petition under 37 CFR 1.47(b) is again **DISMISSED**.

Rule 47 applicant is given TWO MONTHS from the mailing date of this decision to reply, correcting the below-noted deficiencies. Any reply should be entitled "Request for Reconsideration of Petition Under 37 CFR 1.47(b)," and should only address the deficiencies noted below, except that the reply may include an oath or declaration executed by the non-signing inventor. **FAILURE TO RESPOND WILL RESULT IN ABANDONMENT OF THE APPLICATION.** Extensions of time may be obtained in accordance with 37 CFR 1.136(a).

In the present renewed petition, petitioner asserts that the non-signing inventor refused to sign the declaration in the above-identified application. In support, petitioner has provided a copy of the cover letter transmitting the application papers to the last known address of the non-signing inventor.

A grantable petition under 37 CFR 1.47(b) requires:

(1) proof that the non-signing inventor cannot be reached or refuses to sign the oath or declaration after having been presented with the application papers (specification, claims and drawings);

(2) an acceptable oath or declaration in compliance with 35 U.S.C. §§ 115 and 116;

(3) the petition fee;

(4) a statement of the last known address of the non-signing inventor;

(5) proof of proprietary interest, and
(6) proof of irreparable damage.

The petition lacks items (2), (5), and (6).

In regards to item (2), an oath or declaration in compliance with 37 CFR 1.63 must be supplied. The declaration must include the name, citizenship, residence, and mailing address of the non-signing inventor. If the inventor refuses to sign the declaration, the declaration must be signed by an officer of the corporation (president, vice president, secretary, or treasurer) on behalf of and as agent for the non-signing inventor. The officer must identify his or her title in the declaration. If the declaration is not signed by an officer of the corporation, then proof of the authority of the person signing on behalf of the corporation must be submitted (See MPEP 409.03(b)).

NO copy of an executed oath or declaration is located among the papers received with the present petition. A grantable petition under 37 CFR 1.47(b) **must** include an oath or declaration in compliance with 37 CFR 1.63.

In regard to item (5), petitioner has not shown sufficient proprietary interest in the subject matter to justify filing of the application under 37 CFR 1.47(b).[1] Petitioner may provide proof by showing a copy of the employment agreement between the non-signing inventor and the Rule 1.47(b) applicant (company); a copy of an assignment agreement showing that the invention disclosed in the application is assigned to the Rule 1.47(b) applicant, or a legal memorandum signed by an attorney familiar with the law of the jurisdiction stating that a court of competent jurisdiction would by the weight of authority in that jurisdiction award the title of the invention to the Rule 1.47(b) applicant.

> Petitioner states "[t]he proof of proprietary interest has already been accepted in the Decision of 5 June 2002 because the PCT application proceeded on the basis of the proprietary applicant's interest so shown. The Patent Office cannot now reverse a prior Decision.
>
> The CORRECTED DECISION also requires a Declaration signed on the basis of proprietary interest. However, the holder of such proprietary interest has not yet been established by the Patent Office acceptance of

[1] MPEP 409.03(f).

> proof thereof. Therefore, a person with the proprietary interest cannot be identified pending such acceptance of proof from the Patent Office.

Petitioner's argument has been considered, but is not persuasive. At the outset, as stated in the decision mailed on 15 August, 2005, the mere fact that a petition under 37 CFR 1.425 was granted in the prior application does not permit the Office to grant Rule 47(b) status in the present application. Rather, petitioner must show that the requirements of 37 CFR 1.47(b) have been met. Additionally, the Office may issue a corrected decision vacating a previous decision if it is found that the extant decision was mailed in error or is not supported by the showing of record.

Furthermore, it is unclear why petitioner cannot provide the requisite showing of proprietary interest. Presumably, the company on whose behalf the prior PCT application was filed is the entity with proprietary interest. If an employment agreement or assignment cannot be provided, petitioner may provide the requisite proof of proprietary interest in the form of a legal memorandum as described above. Likewise, petitioner must obtain the signature of an officer of the corporation with proprietary interest on the declaration on behalf of the non-signing inventor as stated above.

In regards to item (6), petitioner must establish irreparable damages in accordance with MPEP 409.03(g). A statement by applicant that the filing is necessary to prevent irreparable damage or to preserve the rights of the parties is sufficient.

It is noted that the address on the petition is different than the correspondence address listed in Office records. As such, a courtesy copy of this decision will be mailed to the address listed in the petition. All future correspondence, however, will be mailed solely to the address of record.

Further correspondence with respect to this matter should be addressed as follows:

By mail: Mail Stop Petition
Commissioner for Patents
P.O. Box 1450
Alexandria, VA 22313-1450

By FAX: (571) 273-8300
Attn: Office of Petitions

By hand: Customer Service Window
Mail Stop Petition
Randolph Building
401 Dulany Street
Alexandria, VA 22134

Telephone inquiries related to this decision should be directed to the undersigned at (571)272-3231.

D Wood

Douglas I. Wood
Senior Petitions Attorney
Office of Petitions

cc: Peter D. Galloway
Ladas and Perry
26 West 61st Street
New York NY 10023

UNITED STATES PATENT AND TRADEMARK OFFICE

Commissioner for Patents
United States Patent and Trademark Office
P.O. Box 1450
Alexandria, VA 22313-1450
www.uspto.gov
DIW Mar-06

THE GILLETTE COMPAMY
PRUDENTIAL TOWER BUILDING
BOSTON MA 02199

COPY MAILED

MAR 0 7 2006

OFFICE OF PETITIONS

In re Application of	:
Matthew S. Garwood	: DECISION REFUSING STATUS
Application No. 10/411,079	: UNDER 37 CFR 1.47(b)
Filed: 10 April, 2003	:
Atty Docket No. U014530-5	:

This is a decision in response to the twice renewed petition under 37 CFR 1.47(b) filed on 13 February, 2006 (certificate of mailing date 8 February, 2006).

The petition under 37 CFR 1.47(b) is again **DISMISSED**.

Rule 47 applicant is given TWO MONTHS from the mailing date of this decision to reply, correcting the below-noted deficiencies. Any reply should be entitled "Request for Reconsideration of Petition Under 37 CFR 1.47(b)," and should only address the deficiencies noted below, except that the reply may include an oath or declaration executed by the non-signing inventor. **FAILURE TO RESPOND WILL RESULT IN ABANDONMENT OF THE APPLICATION.** Extensions of time may be obtained in accordance with 37 CFR 1.136(a).

A grantable petition under 37 CFR 1.47(b) requires:

(1) proof that the non-signing inventor cannot be reached or refuses to sign the oath or declaration after having been presented with the application papers (specification, claims and drawings);

(2) an acceptable oath or declaration in compliance with 35 U.S.C. §§ 115 and 116;

(3) the petition fee;

(4) a statement of the last known address of the non-signing inventor;

(5) proof of proprietary interest, and

(6) proof of irreparable damage.

The petition lacks items (2) and (5).

In regards to item (2), an oath or declaration in compliance with 37 CFR 1.63 must be supplied. The declaration must include the name, citizenship, residence, and mailing address of the non-signing inventor. If the inventor refuses to sign the declaration, the declaration must be signed by an officer of the corporation (president, vice president, secretary, or treasurer) on behalf of and as agent for the non-signing inventor. The officer must identify his or her title in the declaration. If the declaration is not signed by an officer of the corporation, then proof of the authority of the person signing on behalf of the corporation must be submitted (See MPEP 409.03(b)).

The petition states "[d]eferral of the oath or declaration is requested until the proprietary interest is determined to also determine thereby the proprietary party for whom the oath or declaration will be singed (*sic*)." **Petitioner is reminded that the petition cannot be granted unless an oath or declaration in compliance with 37 CFR 1.63 is filed.**

In regard to item (5), petitioner has not shown sufficient proprietary interest in the subject matter to justify filing of the application under 37 CFR 1.47(b).[1] Petitioner may provide proof by showing a copy of the employment agreement between the non-signing inventor and the Rule 1.47(b) applicant (company); a copy of an assignment agreement showing that the invention disclosed in the application is assigned to the Rule 1.47(b) applicant, or a legal memorandum signed by an attorney familiar with the law of the jurisdiction stating that a court of competent jurisdiction would by the weight of authority in that jurisdiction award the title of the invention to the Rule 1.47(b) applicant.

While petitioner has provided a copy of an agreement between FM Designs Limited and The Gillette Company, there is no showing of any agreement between the non-signing inventor and the Rule 1.47(b) applicant. Petitioners must provide proof of proprietary interest as specified above.

It is noted that the address on the petition is different than the correspondence address listed in Office records. As such, a courtesy copy of this decision will be mailed to the address listed in the petition. All future correspondence, however, will be mailed solely to the address of record.

---

[1] MPEP 409.03(f).

Further correspondence with respect to this matter should be addressed as follows:

By mail: Mail Stop Petition
Commissioner for Patents
P.O. Box 1450
Alexandria, VA 22313-1450

By FAX: (571) 273-8300
Attn: Office of Petitions

By hand: Customer Service Window
Mail Stop Petition
Randolph Building
401 Dulany Street
Alexandria, VA 22134

Telephone inquiries related to this decision should be directed to the undersigned at (571)272-3231.

D Wood

Douglas I. Wood
Senior Petitions Attorney
Office of Petitions

cc: William R. Evans
c/o Ladas and Perry LLP
26 West 61st Street
New York NY 10023

UNITED STATES PATENT AND TRADEMARK OFFICE

Commissioner for Patents
United States Patent and Trademark Office
P.O. Box 1450
Alexandria, VA 22313-1450
www.uspto.gov
DIW Jun-06

THE GILLETTE COMPAMY
PRUDENTIAL TOWER BUILDING
BOSTON MA 02199

COPY MAILED

JUN 09 2006

OFFICE OF PETITIONS

In re Application of	:
Matthew S. Garwood	: DECISION ACCORDING STATUS
Application No. 10/411,079	: UNDER 37 CFR 1.47(b)
Filed: 10 April, 2003	:
Atty Docket No. U014530-5	:

This is a decision in response to the thrice renewed petition under 37 CFR 1.47(b) filed on 11 April, 2006 (certificate of mailing date 6 April, 2006).

The petition is **GRANTED**.

Petitioner have shown that the inventor has refused to join in the filing of the above-identified application after having been sent a copy of the application papers. Specifically, petitioners shown that a copy of the application was sent to the non-signing inventor's last known address. The inventor, however, has failed to sign and return the declaration. Additionally, petitioners have shown, via the "ACKNOWLEDGEMENT AND UNDERTAKING" signed by non-signing joint inventor Garwood, that petitioner The Gilette Company, has a proprietary interest in the above-identified application. Lastly, petitioner has submitted a declaration in compliance with 37 CFR 1.63, signed by Donal B. Tobin, Vice President, Intellectual Property, The Gillette Company, and has demonstrated that such action is necessary to preserve the rights of the parties.

This application and papers have been reviewed and found in compliance with 37 CFR 1.47(b). This application is hereby accorded Rule 1.47(b) status.

As provided in Rule 1.47(c), this Office will forward notice of this application's filing to the non-signing inventor at the residence address listed on the declaration. Notice of the filing of this application will also be published in the *Official Gazette*.

The application file is being referred to the Office of Initial Patent Examination for further processing.

Telephone inquiries related to this decision should be directed to the undersigned at (571) 272-3231.

D Wood

Douglas I. Wood
Senior Petitions Attorney
Office of Petitions

UNITED STATES PATENT AND TRADEMARK OFFICE

Commissioner for Patents
United States Patent and Trademark Office
P.O. Box 1450
Alexandria, VA 22313-1450
www.uspto.gov
DIW Jun-06

Matthew S. Garwood
Maes y celln
Tonteg Pontpridd
Mid-Glamorgan
South Wales UK CF38 1NF
UNITED KINGDOM

COPY MAILED

JUN 09 2006

OFFICE OF PETITIONS

In re Application of
Matthew S. Garwood
Application No. 10/411,079
Filed: 10 April, 2003
For: APPLICATOR, E.G. FOR SHAVING PREPARATION AND THE LIKE

Dear Mr. Garwood:

You are named as the sole inventor in the above identified United States patent application, filed under the provisions of 35 U.S.C. 116 (United States Code), and 37 CFR 1.47(b), Rules of Practice in Patent Cases. Should a patent be granted on the application you will be designated therein as the sole inventor.

As the named inventor you are entitled to inspect any paper in the file wrapper of the application, order copies of all or any part thereof (at a prepaid cost per 37 CFR 1.19) or make your position of record in the application. Alternatively, you may arrange to do any of the preceding through a registered patent attorney or agent presenting written authorization from you. If you care to join the application, counsel of record (see below) would presumably assist you. Joining in the application would entail the filing of an appropriate oath or declaration by you pursuant to 37 CFR 1.63.

Telephone inquiries regarding this communication should be directed to the undersigned at 571/272-3231. Requests for information regarding your application should be directed to the File Information Unit at 571-272-3150. Information regarding how to pay for and order a copy of the application, or a specific paper in the application, should be directed to Certification Division at 571-272-3150 or 1-800-972-6382 (outside the Washington D.C. area).

D Wood

Douglas I. Wood
Senior Petitions Attorney
Office of Petitions

THE GILLETTE COMPANY
PRUDENTIAL TOWER BUILDING
BOSTON MA 02199

UNITED STATES PATENT AND TRADEMARK OFFICE

COMMISSIONER FOR PATENTS
UNITED STATES PATENT AND TRADEMARK OFFICE
P.O. BOX 1450
ALEXANDRIA, VA 22313-1450
www.uspto.gov

BIRCH STEWART KOLASCH & BIRCH
PO BOX 747
FALLS CHURCH VA 22040-0747

COPY MAILED

NOV 24 2004

OFFICE OF PETITIONS

Applicant: Lee et al.
Appl. No.: 10/411,094
Filing Date: April 11, 2003
Title: NAVIGATION SYSTEM AND NAVIGATION METHOD
Attorney Docket No.: 4599-0101P
Pub. No.: US 2003/0193529 A1
Pub. Date: October 16, 2003

This is a decision on the request for corrected patent application publication under 37 CFR 1.221(b), filed on December 8, 2003 for the above-identified application.

The request is granted.

The corrected patent application publication will be published in due course, unless the patent issues before the application republishes.

Inquires concerning this communication should be directed to Mark Polutta at (571) 272-7709.

Mark O. Polutta
Office of Patent Legal Administration
Office of the Deputy Commissioner
for Patent Examination Policy

UNITED STATES PATENT AND TRADEMARK OFFICE

COMMISSIONER FOR PATENTS
UNITED STATES PATENT AND TRADEMARK OFFICE
P.O. BOX 1450
ALEXANDRIA, VA 22313-1450
www.uspto.gov

Paper No. 7

PENNIE AND EDMONDS
1155 AVENUE OF THE AMERICAS
NEW YORK, NY 10036-2711

COPY MAILED

OCT 06 2003

OFFICE OF PETITIONS

In re Application of	:
Zhaowei Liu and Qingbo Li	: DECISION GRANTING
Application No. 10/411,103	: PETITION UNDER
Filed: April 11, 2003	: 37 CFR 1.47
Attorney Docket No. 9046-047-999	:
For: System and Method for Determining Presence of Methylated Cytosines in Polynucleotides	:

This is in response to the petition under 37 CFR 1.47(a) filed July 28, 2003.

The petition is **granted**.

Petitioner has shown that the non-signing inventor has refused to join in the filing of the above-identified application after having been presented with the application papers.

The above-identified application and papers have been reviewed and found in compliance with 37 CFR 1.47(a). This application is hereby accorded Rule 1.47(a) status.

As provided in Rule 1.47(c), this Office will forward notice of this application's filing to the non-signing inventor at the address given in the petition. Notice of the filing of this application will also be published in the Official Gazette.

Where an applicant appoints all of the practitioners associated with a Customer Number as well as a list of individually named practitioners, such action will be treated as only an appointment of all of the practitioners associated with a Customer Number due to the potential for confusion and data entry errors in entering registration numbers from plural sources. Therefore, the power of attorney has been entered to the extent that the practitioners associated with Customer Number 20583 have been entered as attorneys or agents of record.

The power of attorney will not be entered to the extent the paper seeks to exclude the inventors under 37 CFR 3.71. An assignment from Li has not been provided.

If the instant petition were a petition under 37 CFR 1.47(b), then the evidence would be sufficient to demonstrate that Spectrumedix, LLC, has sufficient proprietary interest to prosecute the application on behalf of the non-signing inventor. However, proof of proprietary interest is not equivalent to proof that one is an assignee of the inventor.

Petitioner alleges that Li signed an employment agreement which obligates Li to assign the invention to petitioner. However, an obligation to assign is not the equivalent of an actual assignment. Although equity may consider petitioner to be the owner of the patent, legal title has not necessarily vested.

The Federal Circuit[1] has stated,

> the fact remains that the . . . consulting agreement was an agreement to assign, not an assignment. Its provision that all rights to inventions developed during the consulting period "will be assigned" . . . does not rise to the level of a present assignment of an existing invention, effective to transfer all legal and equitable rights therein. . . . Although an agreement to assign in the future inventions not yet developed may vest the promisee with equitable rights in those inventions once made, such an agreement does not by itself vest legal title to patents on the inventions in the promisee.

One court[2] has stated,

> The doctrine proceeded upon the plain ground, affirmed by the common law, that a man can pass by a grant or assignment only that which he now possesses, and which is in existence, at the time, either actually or potentially. His grant or assignment is, therefore, by its natural interpretation, limited to the rights and things which are then in existence, and which he has power to grant, unless he uses other language, which imports an intention to grant what he does not now possess, and what is not now in existence. In the latter case, the language does not even then operate strictly as an assignment or grant, but only as a covenant or contract, which a court of equity will carry into full effect, when the right or thing comes in esse. Thus, it is laid down in Comyn's Digest ("Assignment," cc. 1-3; Id. "Grant" D), and better authority could not be, for, as was well observed by Lord Kenyon, he was the greatest lawyer of his day in all Westminster hall, that an assignment or grant cannot, at law, be of a chose in action, bare right, or possibility. And in a case in Lord Hobart's Reports, it was said, that although a man may, by grant or assignment, assign all the wool then growing on the backs of the sheep owned by him; yet he cannot grant or assign the wool that shall grow upon the backs of the sheep which he shall hereafter buy. Grantham v. Hawley, Hob. 132. And this doctrine was fully recognized by Lord Eldon in the case of Curtis v. Auber, 1 Jac. & [**6] W. 526, 532.

Petitioner has not shown to the satisfaction of the USPTO that it may intervene to the exclusion of Li within the meaning of 37 CFR 3.73(b) and MPEP 324, since only the owner of the entire interest in an application has the sole right to control prosecution of that application.

Since petitioner has not supplied a copy of an assignment from the non-signing inventor or other evidence to establish legal title, relief under 37 CFR 3.71 will not be granted.

It should be noted that the employment contract contains irregularities. The page contains the handwritten words, "This is to replace the original one that was misplaced in Joe Alderstein's home office." The inventors signature is dated September 18, 1995, but the witnesses signature is dated September 4, 2001.

After this decision is mailed, the file will be forwarded to the Office of Initial Patent Examination for further processing.

---

[1] Arachnid, Inc. v. Merit Industries, Inc., 939 F.2d 1574, 1580, 19 U.S.P.Q.2D (BNA) 1513.

[2] Woodworth v. Sherman, 30 F. Cas. 586, 587-588 (C.C.D. Ma. 1844) (No. 18,019).

Telephone inquiries should be directed to Petitions Attorney Steven Brantley at (703) 306-5683.

Charles Steven Brantley
Petitions Attorney
Office of Petitions

UNITED STATES PATENT AND TRADEMARK OFFICE

COMMISSIONER FOR PATENTS
UNITED STATES PATENT AND TRADEMARK OFFICE
P.O. BOX 1450
ALEXANDRIA, VA 22313-1450
www.uspto.gov

Paper No. 8

Qingbo Li
2234 Autumnwood Drive
State College, PA 16803

COPY MAILED

OCT 06 2003

OFFICE OF PETITIONS

In re Application of :
Zhaowei Liu and Qingbo Li :
Application No. 10/411,103 :
Filed: April 11, 2003 : Letter
Attorney Docket No. 9046-047-999 :
For: System and Method for Determining :
Presence of Methylated Cytosines in :
Polynucleotides :

Dear Mr. Li:

You are named as a joint inventor in the above identified United States patent application, filed under the provisions of 35 U.S.C. 116 (United States Code), and 37 CFR 1.47(a), Rules of Practice in Patent Cases. Should a patent be granted on the application you will be designated therein as a joint inventor.

As a named inventor you are entitled to inspect any paper in the file wrapper of the application, order copies of all or any part thereof (at a prepaid cost per 37 CFR 1.19) or make your position of record in the application. Alternatively, you may arrange to do any of the preceding through a registered patent attorney or agent presenting written authorization from you. If you care to join the application, counsel of record (see below) would presumably assist you. Joining in the application would entail the filing of an appropriate oath or declaration by you pursuant to 37 CFR 1.63.

Requests for information regarding your application should be directed to the File Information Unit at (703)308-2733. Information regarding how to pay for and order a copy of the application, or a specific paper in the application, should be directed to Certification Division at (703)308-9726 or 1(800)972-6382 (outside the Washington D.C. area).

Telephone inquiries regarding this communication should be directed to Petitions Attorney Steven Brantley at (703) 306-5683.

Charles Steven Brantley
Petitions Attorney
Office of Petitions

cc: PENNIE AND EDMONDS
1155 AVENUE OF THE AMERICAS
NEW YORK, NY 10036-2711

SPE RESPONSE FOR CERTIFICATE OF CORRECTION

DATE : 2/27/08

Paper No.: —

TO SPE OF : ART UNIT 2852

SUBJECT : Request for Certificate of Correction for Appl. No.: 10/411104 Patent No: 7242876 B2

A response is requested with respect to a request for a certificate of correction.

With respect to the change(s) requested to correct Office and/or Applicant's errors, should the patent read as shown in the certificate of correction attached herewith or the COCIN document(s), in IFW images for the above-identified patented application? No new matter should be introduced, nor should the scope or meaning of the claims be changed.

If the response is for an IFW, within 7 days, please complete and forward the response, to the employee (named below) via scanning into application images, using document code **COCX**.

If the response is for a paper file wrapper, please complete the response and forward the response with the paper file wrapper, to the employee (named below), within 7 days, to:

Certificates of Correction Branch (CofC)
South Tower - 9A22
Palm Location 7580

VIRGINIA TOLBERT
Certificates of Correction Branch
703-308-9390 ext. 113

Thank You For Your Assistance

The request for issuing the above-identified correction(s) is hereby:
Note your decision on the appropriate box.

- ☐ **Approved** — All changes apply.
- ☒ **Approved in Part** — Specify below which changes **do not** apply.
- ☐ **Denied** — State the reasons for denial below.

Comments: Do not apply the changes to Column 11 per Applicant's representative.

SPE

2852
Art Unit

PTOL-306 (REV. 7/03)

U.S. DEPARTMENT OF COMMERCE Patent and Trademark Office

UNITED STATES PATENT AND TRADEMARK OFFICE

Commissioner for Patents
United States Patent and Trademark Office
P.O. Box 1450
Alexandria, VA 22313-1450
www.uspto.gov

BIRCH STEWART KOLASCH & BIRCH
PO BOX 747
FALLS CHURCH VA 22040-0747

COPY MAILED

DEC 05 2008

OFFICE OF PETITIONS

In re Application of	:	
Uwagaki, et al.	:	
Application No. 10/411,129	:	DECISION ON PETITIONS
Filed: April 11, 2003	:	
Attorney Docket No. 1247-0512P	:	

This is a decision on the petition to expunge under 37 CFR 1.59(b), filed November 14, 2008.

The petition to expunge is **DISMISSED**.

Any request for reconsideration of this decision must be submitted within **TWO (2) MONTHS** of the mailing date of this decision.

As set forth in MPEP 724.05, a petition to expunge information unintentionally submitted in an application (other than information forming part of the original disclosure) may be filed under 37 CFR 1.59(b), provided that:

(A) the Office can effect such return prior to the issuance of any patent on the application in issue;

(B) it is stated that the information submitted was unintentionally submitted and the failure to obtain its return would cause irreparable harm to the party who submitted the information or to the party in interest on whose behalf the information was submitted;

(C) the information has not otherwise been made public;

(D) there is a commitment on the part of the petitioner to retain such information for the period of any patent with regard to which such information is submitted;

(E) it is established to the satisfaction of the Director that the information to be returned is not material information under 37 CFR 1.56; and

(F) the petition fee as set forth in 37 CFR 1.17(g) is included.

The instant petition has not satisfied item (B) above. Petitioner has not stated that the failure to obtain its return would cause irreparable harm to the party who submitted the information.

Further correspondence with respect to this matter should be addressed as follows:

By mail: Mail Stop Petitions
Commissioner for Patents
P.O. Box 1450
Alexandria VA 22313-1450

By FAX: (571)273-8300
Attn: Office of Petitions

Telephone inquiries related to this decision should be directed to the undersigned at (571) 272-3219.

Cliff Congo
Petitions Attorney
Office of Petitions

10/411139

UNITED STATES PATENT AND TRADEMARK OFFICE

CERTIFICATE OF CORRECTION

PATENT NO. : 6,717,713 B2
DATED : April 6, 2004
INVENTOR(S) : Hiroshi Onaka et al.

It is certified that error appears in the above-identified patent and that said Letters Patent is hereby corrected as shown below:

Title page,
Item [56], **References Cited**, OTHER PUBLICATIONS,
"U.S. patent application Ser. No. 08/803,378" reference, after "filed" insert -- February 20, 1997 --.
"U.S. patent application Ser. No. 08/655,027" reference, after "May 28," insert -- 1996 --.
"U.s. patent application Ser. No. 09/921,692" reference, change "U.s." to -- U.S. --.
Item [57], **ABSTRACT**,
Line 20, change "he" to -- the --.

Signed and Sealed this

Twenty-second Day of February, 2005

Jon W. Dudas

JON W. DUDAS
Director of the United States Patent and Trademark Office

UNITED STATES PATENT AND TRADEMARK OFFICE

COMMISSIONER FOR PATENTS
UNITED STATES PATENT AND TRADEMARK OFFICE
P.O. BOX 1450
ALEXANDRIA, VA 22313-1450
www.uspto.gov

Paper No. 5

HUNTON & WILLIAMS
INTELLECTUAL PROPERTY DEPARTMENT
1900 K STREET, N.W.
SUITE 1200
WASHINGTON, DC 20006-1109

COPY MAILED

OCT 09 2003

OFFICE OF PETITIONS

In re Application of
Elstrom et al.
Application No. 10/411,156
Filed: April 11, 2003
Title: PREPARATION FOR TRANSMISSION AND RECEPTION OF ELECTRICAL SIGNALS

DECISION ON PETITION

This is a decision on the "PETITION UNDER 37 C.F.R. § 1.182 TO CHANGE ORDER OF NAMES IN JOINT APPLICATION," filed August 7, 2003.

The petition is **GRANTED.**

The order of the names of the inventors will be changed as follows:

1. Tuan A. Elstrom
2. Scott Kellogg
3. Joseph Kost
4. Samir S. Mitragotri
5. Nicholas F. Warner
6. Steve Di Matteo

Receipt of the petition fee is acknowledged.

This application is being forwarded to the Office of Initial Patent Examination for change of order of inventors in Office records and for completion of pre-examination processing.

Telephone inquiries related to this decision should be directed to the undersigned at (703) 305-0309.

Nancy Johnson
Senior Petitions Attorney
Office of Petitions

UNITED STATES PATENT AND TRADEMARK OFFICE

Commissioner for Patents
United States Patent and Trademark Office
P.O. Box 1450
Alexandria, VA 22313-1450
www.uspto.gov

TRANSMETA
C/O MURABITO, HAO & BARNES LLP
TWO NORTH MARKET STREET
THIRD FLOOR
SAN JOSE, CA 95113

COPY MAILED

AUG 0 8 2007

OFFICE OF PETITIONS

In re Application of Alexander C. Klaiber et al Application No. 10/411,168 Filed: April 9, 2003 Attorney Docket No. TRAN-P065	DECISION GRANTING PETITION UNDER 37 CFR 1.313(c)(2)

This is a decision on the petition, filed August 6, 2007, under 37 CFR 1.313(c)(2) to withdraw the above-identified application from issue after payment of the issue fee.

The petition is **GRANTED**.

The above-identified application is withdrawn from issue for consideration of a submission under 37 CFR 1.114 (request for continued examination). See 37 CFR 1.313(c)(2).

Petitioner is advised that the issue fee paid on July 16, 2007 in the above-identified application cannot be refunded. If, however, the above-identified application is again allowed, petitioner may request that it be applied towards the issue fee required by the new Notice of Allowance.[1]

Telephone inquiries should be directed to the undersigned at (571) 272-3218.

This matter is being referred to Technology Center AU 2187 for processing of the request for continued examination under 37 CFR 1.114 and for consideration of the Information Disclosure Statement.

Frances Hicks
Petitions Examiner
Office of Petitions

C:\Documents and Settings\fhicks\My Documents\470\aug10\411168.wpd

---

[1] *The request to apply the issue fee to the new Notice may be satisfied by completing and returning the new Part B – Fee(s) Transmittal Form (along with any balance due at the time of submission). Petitioner is advised that the Issue Fee Transmittal Form **must** be completed and timely submitted to avoid abandonment.*

UNITED STATES PATENT AND TRADEMARK OFFICE

UNITED STATES DEPARTMENT OF COMMERCE
United States Patent and Trademark Office
Address: COMMISSIONER FOR PATENTS
P.O. Box 1450
Alexandria, Virginia 22313-1450
www.uspto.gov

IV (TRANSMETA)
C/O MURABITO, HAO & BARNES LLP
TWO NORTH MARKET STREET
THIRD FLOOR
SAN JOSE, CA 95113

Mail Date: 04/21/2010

Applicant	: Alexander C. Klaiber	: DECISION ON REQUEST FOR
Patent Number	: 7636815	: RECALCULATION of PATENT
Issue Date	: 12/22/2009	: TERM ADJUSTMENT IN VIEW
Appliction No	: 10/411,168	: OF WYETH AND NOTICE OF INTENT TO
Filed	: 04/09/2003	: ISSUE CERTIFICATE OF CORRECTION
		:

The Request for Recalculation is **GRANTED** to the extent indicated.

The patent term adjustment has been determined to be **858** days. The USPTO will *sua sponte* issue a certificate of correction reflecting the amount of PTA days determined by the recalculation.

Prior to the issuance of the certificate of correction, the USPTO will afford patentee an opportunity to be heard and request reconsideration. Accordingly, patentee has **one month or thirty (30) days**, whichever is longer, to file a request for reconsideration of this patent term adjustment calculation. See 35 U.S.C. 154(b)(3)(B)(ii) and 37 CFR 1.322(a)(4). No extensions of time will be granted under 37 CFR 1.136.

Patentee should use document code PET.OP if electronically filing a request for reconsideration of this patent term adjustment calculation. The patentee must also include the information required by 37 CFR 1.705(b)(2) and the fee required by 37 CFR 1.18(e). If patentee does not file a timely request for reconsideration of this patent term adjustment calculation including the information required by 37 CFR 1.705(b)(2) and the fee required by 37 CFR 1.18(e), the USPTO will issue a certificate of correction reflecting the PTA determination noted above.

Patentee should be aware that in order to preserve the right to review in the United States District Court for the District of Columbia of the USPTO patent term adjustment determination, patentee must ensure that he or she also take the steps required under 35 U.S.C. 154(b)(4)(A) in a timely manner. Nothing in the request for recalculation should be construed as providing an alternative time frame for commencing a civil action under 35 U.S.C. 154(b)(4)(A).

Any questions concerning this decision should be directed to the Office of Patent Legal Administration at 571-272-7702.

SPE: N. Nguyen

SPE RESPONSE FOR CERTIFICATE OF CORRECTION

Paper No.: _____

DATE : 6/23/07

TO SPE OF : ART UNIT 1753

SUBJECT : Request for Certificate of Correction for Appl. No.: 10/411,178 Patent No.: 7144556

Please respond to this request for a certificate of correction within 7 days.

Please review the requested changes/corrections as shown in the **COCIN** document(s) in the IFW application image. No new matter should be introduced, nor should the scope or meaning of the claims be changed.

Please complete the response (see below) and forward the completed response to scanning using document code **COCX**.

Lamonte M. Newsome
Certificates of Correction Branch
703-308-9390 ext. 112

Thank You For Your Assistance

The request for issuing the above-identified correction(s) is hereby:
Note your decision on the appropriate box.

- ☐ **Approved** — All changes apply.
- ☐ **Approved in Part** — Specify below which changes **do not** apply.
- ☒ **Denied** — State the reasons for denial below.

Comments: THE INDICATION OF ERROR TO LINE 19 OF COLUMN 12 IS INCORRECT. DO NOT ENTER THE REQUEST. APPLICANT WILL RESUBMIT A SECOND REQUEST. 7/30/07

Nam Nguyen
SPE

1753
Art Unit

UNITED STATES PATENT AND TRADEMARK OFFICE

Commissioner for Patents
United States Patent and Trademark Office
P.O. Box 1450
Alexandria, VA 22313-1450
www.uspto.gov

N. Kenneth Burraston
Kirton & McConkie
P. O. Box 45120
Salt Lake City, UT 84145-0120

COPY MAILED

OCT 2 8 2005

OFFICE OF PETITIONS

In re Application of	:	
Tae Ma Kim, et al.	:	
Application No. 10/411,179	:	ON PETITION
Filed: April 10, 2003	:	
Attorney Docket No. P195-US	:	

This is a decision on the petition under 37 CFR 1.137(b), filed August 31, 2005, to revive the above-identified application.

The petition is **GRANTED**.

The application became abandoned for failure to timely file a reply to a non-final Office action.

The petition satisfies the requirements of 37 CFR 1.137(b) in that petitioner has supplied (1) the reply in the form of an amendment; (2) the petition fee of $1500; and (3) an adequate statement of unintentional delay.

Telephone inquiries concerning this decision should be directed to the undersigned at (571) 272-3223.

The application file is being referred to Technology Center 2800.

Marianne E. Jenkins
Petitions Examiner
Office of Petitions

UNITED STATES PATENT AND TRADEMARK OFFICE

Commissioner for Patents
United States Patent and Trademark Office
P.O. Box 1450
Alexandria, VA 22313-1450
www.uspto.gov

ALVIN COX
10612 HAMBLETONIAN PL
SANTA ANA, CA 92705

COPY MAILED

DEC 28 2005

OFFICE OF PETITIONS

In re Application of	:	
Alvin Emison Cox	:	
Application No. 10/411,188	:	ON PETITION
Filed: April 11, 2003	:	
Attorney Docket No. N/A	:	

This is a decision on the petition under 37 CFR 1.137(b), filed November 2, 2005, to revive the above-identified application.

The petition is **DISMISSED**.

Any request for reconsideration of this decision must be submitted within **TWO (2) MONTHS** from the mail date of this decision. Extensions of time under 37 CFR 1.136(a) are permitted. The reconsideration request should include a cover letter entitled "Renewed Petition under 37 CFR 1.137(b)." This is **not** a final agency action within the meaning of 5 U.S.C. § 704.

A grantable petition under 37 CFR 1.137(b) must be accompanied by: (1) the required reply, unless previously filed; (2) the petition fee as set forth in 37 CFR 1.17(m); (3) a statement that the entire delay in filing the required reply from the due date for the reply until the filing of a grantable petition pursuant to 37 CFR 1.137(b) was unintentional; and (4) any terminal disclaimer (and fee as set forth in 37 CFR 1.20(d)) required by 37 CFR 1.137(d). Where there is a question as to whether either the abandonment or the delay in filing a petition under 37 CFR 1.137 was unintentional, the Commissioner may require additional information. See MPEP 711.03(c)(III)(C) and (D). The instant petition lacks item(s) (1).

The above-identified application became abandoned for failure submit the issue fee, publication fee and formal drawings in a timely manner in reply to the Notice of Allowance and Fee(s) Due/Notice of Allowability mailed March 29, 2005, which set a statutory period for reply of three (3) months. Accordingly, the above-identified application became abandoned after midnight June 29, 2005.

The Office hereby acknowledges receipt of $750 for the petition fee, $700 for the issue fee, $300 for the publication fee, and $15 for five (5) advance soft copies. However, there is no indication that corrected formal drawings as required by the Notice of Allowability of March 29, 2005 have been submitted. Accordingly, this application cannot be revived until corrected formal drawings have been submitted (See attached copy of the Notice of Allowability).

It is not apparent whether the person signing the instant petition was ever given a power of attorney or authorization of agent to prosecute the above-identified application. However, in accordance with 37 CFR 1.34(a), the signature of William S. Britt appearing on the petition shall constitute a representation to the United States Patent and Trademark Office that he/she is authorized to represent the particular party in whose behalf he/she acts. If petitioner desires to receive future correspondence regarding this application, the appropriate power of attorney or authorization of agent must be submitted. A courtesy copy of this decision is being mailed to petitioner. Nevertheless, all future correspondence will be directed solely to the address of record until otherwise instructed.

Further correspondence with respect to this matter should be addressed as follows:

By Mail: Mail Stop PETITION
Commissioner for Patents
P. O. Box 1450
Alexandria, VA 22313-1450

By hand: U. S. Patent and Trademark Office
Customer Service Window, Mail Stop Petitions
Randolph Building
401 Dulany Street
Alexandria, VA 22314

The centralized facsimile number is **(571) 273-8300.**

Telephone inquiries concerning this decision should be directed to the undersigned at (571) 272-3226.

Andrea Smith
Petitions Examiner
Office of Petitions

Enclosure: Courtesy Copy of the Notice of Allowability mailed March 29, 2005

cc: William S. Britt
P.O. Box 2550
Salt Lake City, UT 84110

UNITED STATES PATENT AND TRADEMARK OFFICE

COMMISSIONER FOR PATENTS
UNITED STATES PATENT AND TRADEMARK OFFICE
P.O. BOX 1450
ALEXANDRIA, VA 22313-1450
www.uspto.gov

William S. Britt
P.O. Box 2550
Salt Lake City, UT 84110

COPY MAILED

MAR 1 0 2006

OFFICE OF PETITIONS

ON PETITION

In re Application of :
Alvin Emison Cox :
Application No. 10/411,188 :
Filed: April 11, 2003 :
Attorney Docket No. N/A :

This is a decision on the renewed petition under 37 CFR 1.137(b), filed January 3, 2006, to revive the above-identified application.

It is not apparent whether the statement of unintentional delay was signed by a person who would have been in a position of knowing that the entire delay in filing the required reply from the due date for the reply until the filing of a grantable petition pursuant to 37 CFR 1.137(b) was unintentional. Nevertheless, in accordance with 37 CFR 10.18, the statement is accepted as constituting a certification of unintentional delay. However, in the event that petitioner has no knowledge that the delay was unintentional, petitioner must make such an inquiry to ascertain that, in fact, the delay was unintentional. If petitioner discovers that the delay was intentional, petitioner must so notify the Office.

There is no indication that the person signing the instant petition was ever given a power of attorney or authorization of agent to prosecute the above-identified application. However, in accordance with 37 CFR 1.34(a), the signature, of J. Jeffrey Gunn, appearing on the petition shall constitute a representation to the United States Patent and Trademark Office that he/she is authorized to represent the particular party in whose behalf he/she acts.

The Office hereby acknowledges receipt of three (3) sheets of formal drawings, containing Figures 1A-3C filed January 3, 2006.

Since the petition now satisfies the requirements of 37 CFR 1.137(b), the petition is **GRANTED**.

In the decision mailed December 28, 2005, the undersigned provided petitioner with a courtesy of the decision and informed him that future correspondence would be directed solely to the address of record. Consequently, correspondence sent to the address of record has been returned to the Office on different occasions. Petitioner should note that if applicant desires to receive future correspondence, including the Letters Patent, a change of correspondence address should be submitted. If petitioner desires to receive future correspondence regarding this application, the appropriate power of attorney or authorization of agent must be submitted.

The application file is being referred to the Office of Publications for review of the drawings filed with the instant petition.

Telephone inquiries concerning this decision should be directed to the undersigned at (571) 272-3226.

Andrea Smith
Petitions Examiner
Office of Petitions

UNITED STATES PATENT AND TRADEMARK OFFICE

Commissioner for Patents
United States Patent and Trademark Office
P.O. Box 1450
Alexandria, VA 22313-1450
www.uspto.gov

COPY MAILED

FEB 01 2005

OFFICE OF PETITIONS

STERNE, KESSLER, GOLDSTEIN & FOX PLLC
1100 NEW YORK AVENUE, N.W.
WASHINGTON DC 20005

In re Application of	:	
Andrew C. Evans	:	
Application No. 10/411,194	:	ON PETITION
Filed: April 11, 2003	:	
Attorney Docket No. 1875.2380004	:	

This is a decision on the petition, filed January 31, 2005, under 37 CFR 1.313(c)(2) to withdraw the above-identified application from issue after payment of the issue fee.

The petition is **GRANTED**.

The above-identified application is withdrawn from issue for consideration of a submission under 37 CFR 1.114 (request for continued examination). See 37 CFR 1.313(c)(2).

Petitioner is advised that the issue fee paid on January 18, 2005 in the above-identified application cannot be refunded. If, however, the above-identified application is again allowed, petitioner may request that it be applied towards the issue fee required by the new Notice of Allowance.[1]

Telephone inquiries should be directed to the undersigned at (571) 272-3208.

The examiner of Technology Center AU 2133 will consider the request for continued examination under 37 CFR 1.114.

Karen Creasy
Petitions Examiner
Office of Petitions
Office of the Deputy Commissioner
for Patent Examination Policy

---

[1] The request to apply the issue fee to the new Notice may be satisfied by completing and returning the new Issue Fee Transmittal Form PTOL-85(b), which includes the following language thereon: "Commissioner for Patents is requested to apply the Issue Fee and Publication Fee (if any) or re-apply any previously paid issue fee to the application identified above." Petitioner is advised that, whether a fee is indicated as being due or not, the Issue Fee Transmittal Form **must** be completed and timely submitted to avoid abandonment. Note the language in bold text on the first page of the Notice of Allowance and Fee(s) Due (PTOL-85).

UNITED STATES PATENT AND TRADEMARK OFFICE

Commissioner for Patents
United States Patent and Trademark Office
P.O. Box 1450
Alexandria, VA 22313-1450
www.uspto.gov

VIERRA MAGEN MARCUS HARMON & DENIRO
685 MARKET ST
SUITE 540
SAN FRANCISCO CA 94105-4206

COPY MAILED

AUG 2 2 2005

OFFICE OF PETITIONS

In re Application of	:	
Alcock, et al.	:	
Application No. 10/411,228	:	DECISION ON PETITION
Filed: April 11, 2003	:	
Attorney Docket No. 09100.035	:	

This is a decision on the "PETITION TO ACCORD FILING DATE UNDER 37 C.F.R. §1.53(b)", filed August 1, 2005, requesting that the above-identified application be accorded a filing date of April 11, 2003, and not the presently accorded date of August 6, 2004.

The petition is **GRANTED**.

The application was filed on April 11, 2003. However, on June 6, 2003, the Office mailed a "Notice to File Missing Parts of Nonprovisional Application", stating that the application had been accorded a filing date of April 11, 2003; however, the oath or declaration was missing. In addition, the Notice instructed applicants to submit replacement drawings.

Applicants filed the declaration, together with a surcharge for its late filing and replacement drawings, on August 6, 2003. In response, the Office accorded the application a filing date of August 6, 2003.

It is obvious that the Office erred in according the application a filing date of August 6, 2003. The application met the requirements for a filing date on April 11, 2003.

Given the basis for granting this petition, no fee was required, and none has been charged.

The file is being returned to OIPE for processing with a filing date of April 11, 2003, **not** August 6, 2003, using the application papers filed on April 11, 2003, and the four (4) sheets of replacement drawings filed on August 6, 2003.

Telephone inquiries specific to this matter should be directed to the undersigned at 571-272-3207.

Cliff Congo
Petitions Attorney
Office of Petitions

UNITED STATES PATENT AND TRADEMARK OFFICE

COMMISSIONER FOR PATENTS
UNITED STATES PATENT AND TRADEMARK OFFICE
P.O. BOX 1450
ALEXANDRIA, VA 22313-1450
WWW.USPTO.GOV

Paper No. None

D&C Technology Co., Ltd.
P.O. Box No. 6-57
Junghe
Taipei 235 TW TAIWAN

COPY MAILED

MAY 24 2006

OFFICE OF PETITIONS

In re Application of :
Anderson Lin :
Application No. 10/411,260 :
Filed: April 11, 2003 : DECISION ON PETITION
Title: PCMCIA CARD CONVERTER : UNDER 37 C.F.R. §1.181(A)
CONNECTOR :

This is a decision on the petition under 37 C.F.R. §1.181(a) to withdraw the holding of abandonment, filed on September 23, 2005. Supplements to this petition were submitted on this same date and on April 3, 2006.

The Office regrets the period of delay in issuing this decision.

BACKGROUND

The above-identified application became abandoned for failure to reply in a timely manner to the non-final Office action, mailed March 23, 2005, which set a shortened statutory period for reply of three (3) months. No response was received, and no extensions of time under the provisions of 37 C.F.R. §1.136(a) were requested. Accordingly, the above-identified application became abandoned on June 24, 2005. A notice of abandonment was mailed on September 30, 2005.

With the present petition, Petitioner has alleged that the non-final Office action of March 23, 2005 was not received. A discussion follows.

RELEVANT PORTION OF THE C.F.R. and MPEP

37 C.F.R. § 1.181 (f) sets forth, *in toto*:

> The mere filing of a petition will not stay any period for reply that may be running against the application, nor act as a stay of other proceedings. Any petition under this part not filed within two months of the mailing date of the action or notice from which relief is requested may be dismissed as untimely, except as otherwise provided. This two-month period is not extendable.

MPEP 711.03(c) sets forth, in part:

PETITION TO WITHDRAW HOLDING OF ABANDONMENT BASED ON FAILURE TO RECEIVE OFFICE ACTION

> In Delgar v. Schulyer, 172 USPQ 513 (D.D.C. 1971), the court decided that the Office should mail a new Notice of Allowance in view of the evidence presented in support of the contention that the applicant's representative did not receive the original Notice of Allowance. Under the reasoning of Delgar, an allegation that an Office action was never received may be considered in a petition to withdraw the holding of abandonment. If adequately supported, the Office may grant the petition to withdraw the holding of abandonment and remail the Office action. That is, the reasoning of Delgar is applicable regardless of whether an application is held abandoned for failure to timely pay the issue fee (35 U.S.C. 151) or for failure to prosecute (35 U.S.C. 133).
>
> To minimize costs and burdens to practitioners and the Office, the Office has modified the showing required to establish nonreceipt of an Office action. The showing required to establish nonreceipt of an Office communication must include a statement from the practitioner stating that the Office communication was not received by the practitioner and attesting to the fact that a search of the file jacket and docket records indicates that the Office communication was not received. A copy of the docket record where the nonreceived Office communication would have been entered had it been received and docketed must be attached to and referenced in practitioner's statement. For example, if a three month period for reply was set in the nonreceived Office action, a copy of the docket report showing all replies docketed for a date three months from the mail date of the nonreceived Office action must be submitted as documentary proof of nonreceipt of the Office action. See Notice entitled "Withdrawing the Holding of Abandonment When Office Actions Are Not Received," 1156 O.G. 53 (November 16, 1993).
>
> The showing outlined above may not be sufficient if there are circumstances that point to a conclusion that the Office action may have been lost after receipt rather than a conclusion that the Office action was lost in the mail (e.g., if the practitioner has a history of not receiving Office actions).
>
> Evidence of nonreceipt of an Office communication or action (e.g., Notice of Abandonment or an advisory action) other than that action to which reply was required to avoid abandonment would not warrant withdrawal of the holding of abandonment. Abandonment takes place by operation of law for failure to reply to an Office action or timely pay the issue fee, not by operation of the mailing of a Notice of Abandonment. See Lorenz v. Finkl, 333 F.2d 885, 889-90, 142 USPQ 26, 29-30 (CCPA 1964); Krahn v. Commissioner, 15 USPQ2d 1823, 1824 (E.D. Va 1990); In re Application of Fischer, 6 USPQ2d 1573, 1574 (Comm'r Pat. 1988).

Two additional procedures are available for reviving an application that has become abandoned due to a failure to reply to an Office Action: (1) a petition under 37 CFR 1.137(a) based upon unavoidable delay; and (2) a petition under 37 CFR 1.137(b) based on unintentional delay.

ANALYSIS

The present petition cannot be granted for the following two reasons.

First, the present petition is not timely. 37 C.F.R. §1.181(f) indicates that any petition submitted under this portion of the C.F.R. that is not filed within two months of the mailing date of the action or notice from which relief is requested may be dismissed as untimely. The present petition was submitted over two months after the mailing of the notice of abandonment.

Secondly, the showing in the present petition is not sufficient to establish that the Office communication was not received. The petition contains a statement from the practitioner stating that the Office communication was not received. Petitioner has further submitted an attestation to the fact that a search of the file jacket and docket records indicates that the Office communication was not received.

Petitioner has also included a copy of the docket record, however it cannot be accepted as it is not a docket record where the non-received Office communication would have been entered had it been received and docketed.

Petitioner has submitted three copies of his docket record, each title bears the header "Monthly Log Book for Mail Delivery received from U.S.P.T.O. to P.O. Box 6-57" and contains the items which were received at this Post Office box in March and April of 2004. However, the Office action which Petitioner has asserted he did not receive was mailed on March 23, 2005. It is clear that an item which was mailed in 2005 would not appear in a log book which contains mailings which were received one year prior.

As such, Petitioner has failed to meet the requirements set forth in Delgar v. Schuyler, and as such, he has failed to establish that this advisory action was not received.

CONCLUSION

For the reasons discussed above, the petition under 37 C.F.R. §1.181 must be **DISMISSED**.

Any renewed petition under 37 C.F.R. §1.181 must be submitted within **TWO (2) MONTHS** from the mail date of this decision.

Extensions of time under 37 C.F.R. §1.136(a) are permitted. The request for reconsideration should include a cover letter entitled "Renewed Petition under 37 C.F.R. §1.181," and should only address the deficiencies noted in this decision.

Petitioner may also wish to consider filing a petition under 37 C.F.R. §§1.137(a) and/or (b).

The renewed petition should indicate in a prominent manner that the attorney handling this matter is Paul Shanoski, and may be submitted by mail[1], hand-delivery[2], or facsimile[3].

Furthermore, it is noted that Petitioner has a similar petition pending before the Office, where it is alleged that an Office action associated with application number 10/685,596 was not received. On renewed petition, Petitioner must state how many similar petitions he currently has pending before the Office, how frequently he encounters this problem in his practice, and whether he has a history of not receiving Office actions.

Paul Shanoski
Senior Attorney
Office of Petitions
United States Patent and Trademark Office

Encl. Copy of the non-final Office action, mailed March 23, 2005

---

1 Mail Stop Petition, Commissioner for Patents, United States Patent and Trademark Office, P.O. Box 1450, Alexandria, VA, 22313-1450.
2 Customer Window, Randolph Building, 401 Dulaney Street, Alexandria, VA, 22314.
3 (571) 273-8300- please note this is a central facsimile number.

UNITED STATES PATENT AND TRADEMARK OFFICE

COMMISSIONER FOR PATENTS
UNITED STATES PATENT AND TRADEMARK OFFICE
P.O. BOX 1450
ALEXANDRIA, VA 22313-1450
WWW.USPTO.GOV

Paper No. None

D&C Technology Co., Ltd.
P.O. Box No. 6-57
Junghe
Taipei 235 TAIWAN

COPY MAILED

AUG 15 2006

OFFICE OF PETITIONS

In re Application of	:	
Anderson Lin	:	
Application No. 10/411,260	:	DECISION ON RENEWED PETITION
Filed: April 11, 2003	:	UNDER 37 C.F.R. §1.181(A)
Title: PCMCIA CARD CONVERTER	:	
CONNECTOR	:	

This is a decision on the renewed petition filed on June 27, 2006 under 37 C.F.R. §1.181(a), to withdraw the holding of abandonment,

BACKGROUND

The above-identified application became abandoned for failure to reply in a timely manner to the non-final Office action, mailed March 23, 2005, which set a shortened statutory period for reply of three (3) months. No response was received, and no extensions of time under the provisions of 37 C.F.R. §1.136(a) were requested. Accordingly, the above-identified application became abandoned on June 24, 2005. A notice of abandonment was mailed on September 30, 2005.

The original petition was filed on September 23, 2005, and was dismissed via the mailing of a decision on May 24, 2006. With the present petition, Petitioner has alleged that the non-final Office action of March 23, 2005 was not received. A discussion follows.

ANALYSIS

The decision on the original petition set forth that the original petition was not timely filed, and with this renewed petition, it does not appear that Petitioner has addressed this point.

Furthermore, the Delgar showing, described in the decision on original petition, may not be sufficient if there are circumstances that point to a conclusion that the Office action may have been lost after receipt rather than a conclusion that the Office action was lost in the mail (e.g., if the practitioner has a history of not receiving Office actions).

With this renewed petition, Petitioner has submitted a statement from his "local agent," which establishes that he presently has twelve other petitions pending before the Office, where an Office communication was not received.

It is clear that Petitioner has a history of not receiving Office actions, and as such, the establishment of the failure to receive the Office communication is insufficient to justify the holding of abandonment. Consequently, the present petition cannot be granted.

CONCLUSION

For the reasons discussed above, the petition under 37 C.F.R. §1.181 must be **DISMISSED**.

Petitioner will not be able to establish that the holding of abandonment should be withdrawn, and as such, Petitioner may wish to consider filing a petition under either 37 C.F.R. §1.137(a) and/or (b).

Any subsequent petition should indicate in a prominent manner that the attorney handling this matter is Paul Shanoski, and may be submitted by mail[1], hand-delivery[2], or facsimile[3].

Telephone inquiries regarding *this decision* should be directed to the undersigned at (571) 272-3225[4]. All other inquiries

---

1 Mail Stop Petition, Commissioner for Patents, United States Patent and Trademark Office, P.O. Box 1450, Alexandria, VA, 22313-1450.
2 Customer Window, Randolph Building, 401 Dulaney Street, Alexandria, VA, 22314.
3 (571) 273-8300- please note this is a central facsimile number.
4 Petitioner will note that all practice before the Office should be in writing, and the action of the Office will be based exclusively on the written record in the Office. See 37 C.F.R. §1.2. As such, Petitioner is

concerning examination procedures or status of the application should be directed to the Technology Center.

Paul Shanoski
Senior Attorney
Office of Petitions
United States Patent and Trademark Office

---

reminded that no telephone discussion may be controlling or considered authority for Petitioner's further action(s).

UNITED STATES PATENT AND TRADEMARK OFFICE

Commissioner for Patents
United States Patent and Trademark Office
P.O. Box 1450
Alexandria, VA 22313-1450
www.uspto.gov

DICKSTEIN SHAPIRO MORIN & OSHINSKY LLP
2101 L STREET, NW
WASHINGTON, DC 20037

COPY MAILED

MAR 22 2006

OFFICE OF PETITIONS

In re Application of :
Koubun Sakagami et al. :
Application No. 10/411,280 :
Filed: April 11, 2003 :
Title of Invention: R2184.0224/P224 :

ON PETITION

This is a decision on the petition filed March 2, 2006 under 37 CFR 1.137(b),[1] to revive the above-identified application.

The petition under 37 CFR 1.137 (b) is **GRANTED**.

This application became abandoned March 1, 2006 for failure to timely pay the issue fee on or before February 28, 2006. The instant petition and this decision precede the mailing of the Notice of Abandonment.

The issue fee, petition fee and publication fee have been applied. All other requirements of 37 CFR 1.137(b) having now been met, this application file is being forwarded to the Publishing Division to be processed into a patent.

Telephone inquiries concerning this matter may be directed to the undersigned Petitions Attorney at (571) 272-3212.

Patricia Faison-Ball

Patricia Faison-Ball
Senior Petitions Attorney
Office of Petitions

---

[1] Effective December 1, 1997, the provisions of 37 CFR 1.137(b) now provide that where the delay in reply was unintentional, a petition may be filed to revive an abandoned application or a lapsed patent pursuant to 37 CFR 1.137(b). A grantable petition filed under the provisions of 37 CFR 1.137(b) must be accompanied by:

(1) the required reply, unless previously filed. In a nonprovisional application abandoned for failure to prosecute, the required reply may be met by the filing of a continuing application. In a nonprovisional application filed on or after June 8, 1995, and abandoned for failure to prosecute, the required reply may also be met by the filing of a request for continued examination in compliance with § 1.114. In an application or patent, abandoned or lapsed for failure to pay the issue fee or any portion thereof, the required reply must be the payment of the issue fee or any outstanding balance thereof.

(2) the petition fee as set forth in 37 CFR 1.17(m);

(3) a statement that the entire delay in filing the required reply from the due date for the reply until the filing of a grantable petition pursuant to 37 CFR 1.137(b) was unintentional. The Commissioner may required additional information where there is a question whether the delay was unintentional; and

(4) any terminal disclaimer (and fee as set forth in 37 CFR 1.20(d)) required pursuant to 37 CFR 1.137(c)).

UNITED STATES PATENT AND TRADEMARK OFFICE

Commissioner for Patents
United States Patent and Trademark Office
P.O. Box 1450
Alexandria, VA 22313-1450
www.uspto.gov
DIW May-06

ANTONELLI, TERRY, STOUT & KRAUS, LLP
1300 NORTH SEVENTEENTH STREET
SUITE 1800
ARLINGTON VA 22209-3873

COPY MAILED

MAY 19 2006

OFFICE OF PETITIONS

In re Application of	:	
Kohno et al.	:	
Application No. 10/411,283	:	ON PETITION
Filed: 11 April, 2003	:	
Atty. Docket No. 501.36578CC3	:	

This is a decision on the petition to withdraw holding of abandonment, filed on 21 March, 2005.

The Office apologizes for the delay in responding to the present petition and regrets any inconvenience to petitioners.

This application became abandoned on 23 December, 2004, for failure to timely submit the issue and publication fees in response to the Notice of Allowance and Fee(s) Due mailed on 22 September, 2004, which set a three (3) month statutory period for reply. Notice of Abandonment was mailed on 11 February, 2005.

Petitioners assert that during a telephone interview after the mailing of the Notice of Allowance, the examiner agreed that the Notice of Allowance had been issued without considering all claims, and that the examiner would issue a new Notice of Allowance. A review of the record reveals that on 1 October, 2004, petitioners filed an Interview Summary statement to that effect.

Petitioners' argument has been considered, but is not persuasive. At the outset, 35 U.S.C. 151 states:

> If it appears that applicant is entitled to a patent under the law, a written notice of allowance of the application shall be given or mailed to the applicant. The notice shall specify a sum, constituting the issue fee or a portion thereof, which shall be paid within

> three months thereafter. Upon payment of this sum the patent shall issue, but **if payment is not timely made, the application shall be regarded as abandoned**.
>
> (emphasis added)

As such, applicant was statutory required to submit the issue fee three (3) months after the mailing of the Notice of Allowance to avoid abandonment of the application. As applicant concededly failed to pay the issue fee within the required time frame, the application was properly held abandoned.

With regard to petitioners' contention that the examiner agreed to send a new Notice of Allowance but failed so to do, this is an unfortunate situation, but the Office is nonetheless precluded from granting the requested relief. The responsibility was that of applicants to timely submit the issue fee, and applicants failed to do.[1]

As such, the showing of record is that the abandonment resulted from the failure to petitioners to respond to the Notice of Allowability, rather than an error on the part of the USPTO.

As such the application is properly held abandoned.

The petition is **DISMISSED.**

However, in light of the circumstances of this case, petitioners may wish to consider filing a petition to revive under 37 C.F.R. 1.137(a). The issue and publication fees must also be paid with any petition to revive the application.

Any request for reconsideration must be filed within **TWO (2) MONTHS** of the date of this decision.

---

[1] See In re Sivertz, 227 USPQ 255, 256 (Comm'r Pat. 1985); see also In re Colombo, Inc., 33 USPQ2d 1530, 1532 (Comm'r Pat. 1994)(while the Office attempts to notify applicants of deficiencies in their responses in a manner permitting a timely correction, the Office has no obligation to notify parties of deficiencies in their responses in a manner permitting a timely correction).

Further correspondence with respect to this matter should be addressed as follows:

By mail: Mail Stop Petition
Commissioner for Patents
P.O. Box 1450
Alexandria, VA 22313-1450

By FAX: (571) 273-8300
Attn: Office of Petitions

By hand: Customer Service Window
Mail Stop Petition
Randolph Building
401 Dulany Street
Alexandria, VA 22314

Telephone inquiries related to this decision should be directed to the undersigned at 571-272-3231.

D Wood

Douglas I. Wood
Senior Petitions Attorney
Office of Petitions

Encl: PTO/SB/61

PTO/SB/61 (10-05)
Approved for use through 07/31/2006. OMB 0651-0031
U.S. Patent and Trademark Office; U.S. DEPARTMENT OF COMMERCE
Under the Paperwork Reduction Act of 1995, no persons are required to respond to a collection of information unless it displays a valid OMB control number.

PETITION FOR REVIVAL OF AN APPLICATION FOR PATENT ABANDONED UNAVOIDABLY UNDER 37 CFR 1.137(a)	Docket Number (Optional)

First Named Inventor: Art Unit:

Application Number: Examiner:

Filed:

Title:

Attention: Office of Petitions
Mail Stop Petition
Commissioner for Patents
P.O. Box 1450
Alexandria, VA 22313-1450

NOTE: If information or assistance is needed in completing this form, please contact Petitions Information at (571) 272-3282.

The above-identified application became abandoned for failure to file a timely and proper reply to a notice or action by the United Sates Patent and Trademark Office. The date of abandonment is the day after the expiration date of the period set for reply in the Office notice or action plus any extensions of time actually obtained.

APPLICANT HEREBY PETITIONS FOR REVIVAL OF THIS APPLICATION.

NOTE: A grantable petition requires the following items:

(1) Petition fee.
(2) Reply and/or issue fee.
(3) Terminal disclaimer with disclaimer fee-required for all utility and plant applications filed before June 8, 1995, and for all design applications; and
(4) Adequate showing of the cause of unavoidable delay.

1. Petition fee

☐ Small entity – fee $_____ (37 CFR 1.17(l)). Applicant claims small entity status. See 37 CFR 1.27.

☐ Other than small entity – fee $_____ (37 CFR 1.17(l)).

2. Reply and/or fee

A The reply and/or fee to the above-noted Office action in the form of _____ (identify the type of reply):

☐ has been filed previously on _____ .

☐ is enclosed herewith.

B The issue fee of $ _____

☐ has been filed previously on _____ .

☐ is enclosed herewith.

This collection of information is required by 37 CFR 1.137(a). The information is required to obtain or retain a benefit by the public which is to file (and by the USPTO to process) an application. Confidentiality is governed by 35 U.S.C. 122 and 37 CFR 1.11 and 1.14. This collection is estimated to take 8 hours to complete, including gathering, preparing, and submitting the completed application form to the USPTO. Time will vary depending upon the individual case. Any comments on the amount of time you require to complete this form and/or suggestions for reducing this burden, should be sent to the Chief Information Officer, U.S. Patent and Trademark Office, U.S. Department of Commerce, P.O. Box 1450, Alexandria, VA 22313-1450. DO NOT SEND FEES OR COMPLETED FORMS TO THIS ADDRESS. **SEND TO: Mail Stop Petition, Commissioner for Patents, P.O. Box 1450, Alexandria, VA 22313-1450.**
If you need assistance in completing the form, call 1-800-PTO-9199 and select option 2.

Under the Paperwork Reduction Act of 1995, no persons are required to respond to a collection of information unless it displays a valid OMB control number.

PETITION FOR REVIVAL OF AN APPLICATION FOR PATENT ABANDONED UNAVOIDABLY UNDER 37 CFR 1.137(a)

3. Terminal disclaimer with disclaimer fee

☐ Since this utility/plant application was filed on or after June 8, 1995, no terminal disclaimer is required.

☐ A terminal disclaimer (and disclaimer fee (37 CFR 1.20(d)) of $ _____ for a small entity or $ _____ for other than a small entity) disclaiming the required period of time is enclosed herewith (see PTO/SB/63).

4. An adequate showing of the cause of the delay, and that the entire delay in filing the required reply from the due date for the reply until the filing of a grantable petition under 37 CFR 1.137(a) was unavoidable, is enclosed.

WARNING:

Petitioner/applicant is cautioned to avoid submitting personal information in documents filed in a patent application that may contribute to identity theft. Personal information such as social security numbers, bank account numbers, or credit card numbers (other than a check or credit card authorization form PTO-2038 submitted for payment purposes) is never required by the USPTO to support a petition or an application. If this type of personal information is included in documents submitted to the USPTO, petitioners/applicants should consider redacting such personal information from the documents before submitting them to the USPTO. Petitioner/applicant is advised that the record of a patent application is available to the public after publication of the application (unless a non-publication request in compliance with 37 CFR 1.213(a) is made in the application) or issuance of a patent. Furthermore, the record from an abandoned application may also be available to the public if the application is referenced in a published application or an issued patent (see 37 CFR 1.14). Checks and credit card authorization forms PTO-2038 submitted for payment purposes are not retained in the application file and therefore are not publicly available.

Signature	Date
Typed or printed name	Registration Number, if applicable
Address	Telephone Number
Address	

Enclosure
☐ Fee Payment
☐ Reply
☐ Terminal Disclaimer Form
☐ Additional sheets containing statements establishing unavoidable delay
☐ _____

CERTIFICATE OF MAILING OR TRANSMISSION (37 CFR 1.8(a))

I hereby certify that this correspondence is being:

☐ deposited with the United States Postal Service on the date shown below with sufficient postage as first class mail in an envelope addressed to **Mail Stop Petition**, Commissioner for Patents, P.O. Box 1450, Alexandria, VA 22313-1450.

☐ transmitted by facsimile on the date shown below to the United States Patent and Trademark Office at (571) 273-8300.

Date	Signature
	Typed or printed name of person signing certificate

Under the Paperwork Reduction Act of 1995, no persons are required to respond to a collection of information unless it displays a valid OMB control number.

PETITION FOR REVIVAL OF AN APPLICATION FOR PATENT ABANDONED UNAVOIDABLY UNDER 37 CFR 1.137(a)

NOTE: The following showing of the cause of unavoidable delay must be signed by all applicants or by any other party who is presenting statements concerning the cause of delay.

Signature	Date
Typed or printed name	Registration Number, if applicable

(In the space provided below, please explain in detail the reasons for the delay in filing a proper reply.)

(Please attach additional sheets if additional space is needed.)

Privacy Act Statement

The **Privacy Act of 1974 (P.L. 93-579)** requires that you be given certain information in connection with your submission of the attached form related to a patent application or patent. Accordingly, pursuant to the requirements of the Act, please be advised that: (1) the general authority for the collection of this information is 35 U.S.C. 2(b)(2); (2) furnishing of the information solicited is voluntary; and (3) the principal purpose for which the information is used by the U.S. Patent and Trademark Office is to process and/or examine your submission related to a patent application or patent. If you do not furnish the requested information, the U.S. Patent and Trademark Office may not be able to process and/or examine your submission, which may result in termination of proceedings or abandonment of the application or expiration of the patent.

The information provided by you in this form will be subject to the following routine uses:

1. The information on this form will be treated confidentially to the extent allowed under the Freedom of Information Act (5 U.S.C. 552) and the Privacy Act (5 U.S.C 552a). Records from this system of records may be disclosed to the Department of Justice to determine whether disclosure of these records is required by the Freedom of Information Act.
2. A record from this system of records may be disclosed, as a routine use, in the course of presenting evidence to a court, magistrate, or administrative tribunal, including disclosures to opposing counsel in the course of settlement negotiations.
3. A record in this system of records may be disclosed, as a routine use, to a Member of Congress submitting a request involving an individual, to whom the record pertains, when the individual has requested assistance from the Member with respect to the subject matter of the record.
4. A record in this system of records may be disclosed, as a routine use, to a contractor of the Agency having need for the information in order to perform a contract. Recipients of information shall be required to comply with the requirements of the Privacy Act of 1974, as amended, pursuant to 5 U.S.C. 552a(m).
5. A record related to an International Application filed under the Patent Cooperation Treaty in this system of records may be disclosed, as a routine use, to the International Bureau of the World Intellectual Property Organization, pursuant to the Patent Cooperation Treaty.
6. A record in this system of records may be disclosed, as a routine use, to another federal agency for purposes of National Security review (35 U.S.C. 181) and for review pursuant to the Atomic Energy Act (42 U.S.C. 218(c)).
7. A record from this system of records may be disclosed, as a routine use, to the Administrator, General Services, or his/her designee, during an inspection of records conducted by GSA as part of that agency's responsibility to recommend improvements in records management practices and programs, under authority of 44 U.S.C. 2904 and 2906. Such disclosure shall be made in accordance with the GSA regulations governing inspection of records for this purpose, and any other relevant (*i.e.*, GSA or Commerce) directive. Such disclosure shall not be used to make determinations about individuals.
8. A record from this system of records may be disclosed, as a routine use, to the public after either publication of the application pursuant to 35 U.S.C. 122(b) or issuance of a patent pursuant to 35 U.S.C. 151. Further, a record may be disclosed, subject to the limitations of 37 CFR 1.14, as a routine use, to the public if the record was filed in an application which became abandoned or in which the proceedings were terminated and which application is referenced by either a published application, an application open to public inspection or an issued patent.
9. A record from this system of records may be disclosed, as a routine use, to a Federal, State, or local law enforcement agency, if the USPTO becomes aware of a violation or potential violation of law or regulation.

UNITED STATES PATENT AND TRADEMARK OFFICE

COMMISSIONER FOR PATENTS
UNITED STATES PATENT AND TRADEMARK OFFICE
P.O. BOX 1450
ALEXANDRIA, VA 22313-1450
www.uspto.gov
DIW Oct-06

ANTONELLI, TERRY, STOUT & KRAUS, LLP
1300 NORTH SEVENTEENTH STREET
SUITE 1800
ARLINGTON VA 22209-9889

COPY MAILED
OCT 1 1 2006
OFFICE OF PETITIONS

In re Application of	:	
Kohno et al.	:	
Application No. 10/411,283	:	ON PETITION
Filed: 11 April, 2003	:	
Atty Docket No. 501.36578CC3	:	

This is a decision on the petition under 37 CFR 1.137(a), filed on 19 July, 2006, to revive the above-identified application.

The petition is **GRANTED**.

The application became abandoned on 23 December, 2004, for failure to timely submit the issue and publication fees in response to the Notice of Allowance and Fee(s) Due mailed on 22 September, 2004, which set a three (3) month statutory period for reply. Notice of Abandonment was mailed on 11 February, 2005. The petition to withdraw the holding of abandonment filed on 19 May, 2005, was dismissed on 19 May, 2006.

The application is restored to pending status.

The application is being referred to the Technology Center for review of the amendment under 37 CFR 1.312.

Telephone inquiries concerning this matter may be directed to the undersigned at (571) 272-3231.

D Wood

Douglas I. Wood
Senior Petitions Attorney
Office of Petitions

UNITED STATES PATENT AND TRADEMARK OFFICE

COMMISSIONER FOR PATENTS
UNITED STATES PATENT AND TRADEMARK OFFICE
P.O. BOX 1450
ALEXANDRIA, VA 22313-1450
www.uspto.gov

VP
PAPER NO. 6

APR 22 2004

In re Application of
Satoshi Matsunuma et al.
Serial Number: 10/411,299
Filed: April 11, 2003
For: MAGNETIC RECORDING MEDIUM, METHOD FOR PRODUCING THE SAME, AND MAGNETIC STORAGE APPARATUS

PETITION UNDER MPEP 708.02 VIII

This is in response to the Petition to Make Special filed April 11, 2003, requesting that the above-identified application be granted Special Status under section 708.02 VIII of the MPEP and 37 CFR 1.102(d). The fee set forth in 37 CFR 1.17(h) has been paid.

The criteria set forth in section 708.02 VIII of the MPEP and 37 CRF 1.102(d) have been met.

Accordingly the petition is **GRANTED.**

Marian C Knode

Marian C. Knode, Special Programs Examiner
Technology Center 1700
Chemical and Materials Engineering

OLIFF & BERRIDGE, PLC
P.O. BOX 19928
ALEXANDRIA VA 22320

SPE RESPONSE FOR CERTIFICATE OF CORRECTION

Paper No.: _____

DATE : August 30, 2006

TO SPE OF : ART UNIT 3723

SUBJECT : Request for Certificate of Correction for Appl. No.: 10/411300 Patent No.: 6,991,518 B1

Please respond to this request for a certificate of correction within 7 days.

Please review the requested changes/corrections as shown in the **COCIN** document(s) in the IFW application image. No new matter should be introduced, nor should the scope or meaning of the claims be changed.

Please complete the response (see below) and forward the completed response to scanning using document code **COCX**.

Elisha Evans
Certificates of Correction Branch

703-308-9390 ext. 110

Thank You For Your Assistance

The request for issuing the above-identified correction(s) is hereby:
Note your decision on the appropriate box.

- ☑ **Approved** — **All** changes apply.
- ☐ **Approved in Part** — Specify below which changes **do not** apply.
- ☐ **Denied** — State the reasons for denial below.

Comments: Correction For Col. 3, 5, 7 & 8 Fix "Typo" Errors and Appendix "A", Part of original Specification was omitted in the Patten

JS 9/5/06

SPE

3736
Art Unit

UNITED STATES PATENT AND TRADEMARK OFFICE

Commissioner for Patents
United States Patent and Trademark Office
P.O. Box 1450
Alexandria, VA 22313-1450
www.uspto.gov

SHAWN CHEN
PO BOX 82-144
TAIPEI
TAIWAN

COPY MAILED

NOV 09 2005

OFFICE OF PETITIONS

In re Application of	:	
Shawn Chen	:	
Application No. 10/411,304	:	ON PETITION
Filed: April 11, 2003	:	
Title: Seat Pad Adjusting Device of an Exerciser	:	

This is a decision on the "PETITION TO WITHDRAW THE HOLDING OF ABANDONMENT BASED ON FAILURE TO RECEIVE OF OFFICE ACTION", filed March 24, 2005, which is being treated as a petition under 37 CFR 1.181.

The petition under 37 CFR 1.181 is **DISMISSED**.

Any request for reconsideration of this decision must be submitted within **TWO (2) MONTHS** from the mail date of this decision. The reconsideration request should include a cover letter entitled "Renewed Petition under 37 CFR 1.181". Extensions of time under 37 CFR 1.136(a) are permitted. No fee is required for a renewed petition.

The above-identified application became abandoned for failure to timely file a reply in response to the non-final Office action mailed June 29, 2004. This Office action set a period for reply of three (3) months. No extensions of time under 37 CFR 1.136(a) were obtained. No reply having been received, the above identified application became abandoned on September 30, 2004. A Notice of Abandonment was mailed on February 3, 2005.

To establish nonreceipt of an Office action, a petitioner must: 1) include a statement that the Office action was not received; 2) attest to the fact that a search of the file jacket and docket records indicates that the Office action was not received; and 3) include a copy of the docket record where the nonreceived Office action would have been entered had it been received and docketed.[1] A proper docket report consists of a "docket record

[1] See MPEP 711.03(c)(II).

where the nonreceived Office action would have been entered had it been received and docketed."[2] "For example, if a three month period for reply was set in the nonreceived Office action, a copy of the docket record showing **all** replies docketed for a date three months from the mail date of the nonreceived Office action must be submitted..."[3]

Here, the docket record submitted on petition is only a summary of the prosecution history for the instant application.

However, as petitioner is a pro-se applicant, the Office understands that petitioner may not keep a formal docket record system for his correspondence. In that case, if petitioner seeks to establish that he did not receive the non-final Office action, petitioner must explain his system for keeping track of patent matters; where he keeps the correspondence; where he writes down due dates; how he knows replies are due, etc. In essence, petitioner must explain how he reminds himself of response due dates and show that the due date for the June 29, 2004 Office action was not entered into that system.

While the showing of record is not sufficient to establish to the satisfaction of the Commissioner that the delay was unavoidable, petitioner is not precluded from obtaining relief by filing a petition pursuant to 37 CFR 1.137(b) on the basis of unintentional delay. A grantable petition pursuant to 37 CFR 1.137(b) must be accompanied by (1) The reply required to the outstanding Office action or notice, unless previously filed; (2) The petition fee as set forth in 37 CFR 1.17(m), currently $750 for a small entity; and (3) A statement that the entire delay in filing the required reply from the due date for the reply until the filing of a grantable petition pursuant to this paragraph was unintentional.

Further correspondence with respect to this matter should be addressed as follows:

By mail: Mail Stop Petitions
Commissioner for Patents
P.O. Box 1450
Alexandria VA 22313-1450

By FAX: (571) 273-8300
Attn: Office of Petitions

Telephone inquiries related to this decision should be directed to the undersigned at (571)272-3207.

Cliff Congo
Petitions Attorney
Office of Petitions

---

[2] MPEP 711.03(c)(II) (emphasis added).

[3] Id.

UNITED STATES PATENT AND TRADEMARK OFFICE

COMMISSIONER FOR PATENTS
UNITED STATES PATENT AND TRADEMARK OFFICE
P.O. BOX 1450
ALEXANDRIA, VA 22313-1450
www.uspto.gov

Thomas L. Irving
FINNEGAN, HENDERSON, FARABOW,
GARRETT & DUNNER, L.L.P.
1300 I Street, N.W.
Washington DC 20005-3315

PROCESSED BY
PG PUB DIVISION

SEP 27 2004

Applicant: Quin et al.
Appl. No.: 10/411,328
Filing Date: April 11, 2003
Title: KIT FOR DYEING KERATIN FIBERS
Attorney Docket No.: 05725.05725.1189-00000
Pub. No.: US 2003/0233713 A1
Pub. Date: December 25, 2003

This is in response to the request for correction of patent application publication under 37 CFR 1.221(b), which was received on February 25, 2004.

The request is DISMISSED.

The instant request is that the patent application publication be republished because publication contains errors in the chemical formula in paragraph 46, line 1 wherein "R_{21}" is misprinted as "$R_{2,}$" and on page 8 formula V43 wherein -CH_3 is omitted from the formula .

37 CFR 1.221(b) is applicable "only when the Office makes a material mistake which is apparent from Office records . . .. This period is not extendable." A material mistake must affect the public's ability to appreciate the technical disclosure of the patent application publication, to determine the scope of the patent application publication, or to determine the scope of the provisional rights that an applicant may seek to enforce upon issuance of a patent.[1]

The typographical error in paragraph 46, line 1 wherein "R_{21} and R'_{21}" is misprinted as "$R_{2,}$ and R'_{21}" is an Office error, but it is a minor typographical error which is understandable from reading the paragraph and specification in which the term is used, as terms are not read in a vacuum because there is not a "$R_{2,}$" in the formula and the sentence is also referring to "$R'_{21,}$". The mistake does not affect the public's ability to appreciate the technical disclosure of the patent application publication, or determine the scope of the patent application publication or determine the scope of the provisional rights that an applicant may seek to enforce upon issuance of a patent.

With respect to the error in formula V43, the missing "-CH_3" is not a material error, as required

[1] Changes to Implement Eighteen-Month Publication of Patent Applications, 65 FR 57023, 57038 (Sept. 20, 2000), 1239 Off. Gaz. Pat. Office Notices 63, 75 (Oct. 10, 2000) (final rule).

by 37 CFR 1.221(b). The mistake is not a material mistake as required by 37 CFR 1.221(b) because the error is not readily apparent from the Office records. The text of the chemical formula as originally filed by Applicant are of a very poor quality and are difficult to read, as the text is small, fuzzy and jammed into a line in the table, thus it is not apparent from the Office records.

Applicant should file applications having larger text, which is cleaner and with sufficient clarity and contrast to permit reproduction to avoid errors in the patent application publication process. See 37 CFR 1.52.

The applicant is advised that a "request for republication of an application previously published" may be filed under 37 CFR 1.221(a). Such a request for republication "must include a copy of the application in compliance with the Office's electronic filing system requirements and be accompanied by the publication fee set forth in § 1.18(d) and the processing fee set forth in § 1.17(i)." If the request for republication does not comply with the electronic filing system requirements, the republication will not take place and the publication fee set forth in § 1.18(d) will be refunded. The processing fee will be retained.

Any request for republication under 37 CFR 1.221(a), should be submitted via the EFS system and questions should be addressed as follows:

By mail to: Mail Stop PGPUB
Commissioner for Patents
P.O. Box 1450
Alexandria, VA 22313-1450

By facsimile: 703-872-9306

Inquires concerning this communication should be directed to Mark Polutta at (703) 308-8122 (voice) or (703) 746-3465 (facsimile).

Mark O. Polutta
Office of Patent Legal Administration
Office of the Deputy Commissioner
for Patent Examination Policy

UNITED STATES PATENT AND TRADEMARK OFFICE

Commissioner for Patents
United States Patent and Trademark Office
P.O. Box 1450
Alexandria, VA 22313-1450
www.uspto.gov

DIGIMARC CORPORATION
9405 SW GEMINI DRIVE
BEAVERTON OR 97008

COPY MAILED

MAY 04 2006

OFFICE OF PETITIONS

ON PETITION

In re Application of
Nelson Schneck et al.
Application No. 10/411,354
Filed: April 10, 2003
Attorney Docket No.: TRAN-P085

This is a decision on the petition filed December 5, 2005 under 37 CFR 1.137(b),[1] to revive the above-identified application.

The petition is **GRANTED**.

This application became abandoned for failure to timely reply to the non-Final Office Action mailed March 23, 2005. A shortened statutory period of three months was set for replying to the non-Final Office Action. No extensions of time having been requested, this application became abandoned June 24, 2005. The instant petition and this decision precede the mailing of the Notice of Abandonment.

This matter is being referred to Technology Center 2876 for appropriate action on the amendment filed December 5, 2005.

Telephone inquiries concerning this matter should be directed to the undersigned Petitions Attorney at (571) 272-3212.

Patricia Faison-Ball
Senior Petitions Attorney
Office of Petitions

[1]Effective December 1, 1997, the provisions of 37 CFR 1.137(b) now provide that where the delay in reply was unintentional, a petition may be filed to revive an abandoned application or a lapsed patent pursuant to 37 CFR 1.137(b). A grantable petition filed under the provisions of 37 CFR 1.137(b) must be accompanied by:

(1) the required reply, unless previously filed. In a nonprovisional application abandoned for failure to prosecute, the required reply may be met by the filing of a continuing application. In a nonprovisional application filed on or after June 8, 1995, and abandoned for failure to prosecute, the required reply may also be met by the filing of a request for continued examination in compliance with § 1.114. In an application or patent, abandoned or lapsed for failure to pay the issue fee or any portion thereof, the required reply must be the payment of the issue fee or any outstanding balance thereof. In an application abandoned for failure to pay the publication fee, the required reply must include payment of the publication fee.

(2) the petition fee as set forth in 37 CFR 1.17(m);

(3) a statement that the entire delay in filing the required reply from the due date for the reply until the filing of a grantable petition pursuant to 37 CFR 1.137(b) was unintentional. The Commissioner may required additional information where there is a question whether the delay was unintentional; and

(4) any terminal disclaimer (and fee as set forth in 37 CFR 1.20(d)) required pursuant to 37 CFR 1.137(c)).

2nd Request

SPE RESPONSE FOR CERTIFICATE OF CORRECTION

DATE : 1/25/10 **Paper No.:** —

TO SPE OF : ART UNIT 2434

SUBJECT : Request for Certificate of Correction for Appl. No.: 10/411362 Patent No.: 7571469B2

Please respond to this request for a certificate of correction within 7 days.

FOR IFW FILES:

Please review the requested changes/corrections as shown in the **COCIN** document(s) in the IFW application image. No new matter should be introduced, nor should the scope or meaning of the claims be changed.

Please complete the response (see below) and forward the completed response to scanning using document code **COCX**.

FOR PAPER FILES:

Please review the requested changes/corrections as shown in the attached certificate of correction. Please complete this form (see below) and forward it with the file to:

Certificates of Correction Branch (CofC)
Randolph Square – 9D10-A
Palm Location 7580

Virginia Tolbert
Certificates of Correction Branch
571-272-0460

Thank You For Your Assistance

The request for issuing the above-identified correction(s) is hereby:
Note your decision on the appropriate box.

- [X] **Approved** — **All** changes apply.
- [ ] **Approved in Part** — Specify below which changes **do not** apply.
- [ ] **Denied** — State the reasons for denial below.

Comments: _____

/KAMBIZ ZAND/ AU 2434

UNITED STATES PATENT AND TRADEMARK OFFICE

UNITED STATES DEPARTMENT OF COMMERCE
United States Patent and Trademark Office
Address: COMMISSIONER FOR PATENTS
P.O. Box 1450
Alexandria, Virginia 22313-1450
www.uspto.gov

ALSTON & BIRD LLP
BANK OF AMERICA PLAZA
101 SOUTH TRYON STREET, SUITE 4000
CHARLOTTE, NC 28280-4000

Mail Date: 04/26/2010

Applicant	: Max Hamberg	: DECISION ON REQUEST FOR
Patent Number	: 7571469	: RECALCULATION of PATENT
Issue Date	: 08/04/2009	: TERM ADJUSTMENT IN VIEW
Application No	: 10/411,362	: OF WYETH AND NOTICE OF INTENT TO
Filed	: 04/11/2003	: ISSUE CERTIFICATE OF CORRECTION
		:

The Request for Recalculation is **GRANTED** to the extent indicated.

The patent term adjustment has been determined to be **1049** days. The USPTO will *sua sponte* issue a certificate of correction reflecting the amount of PTA days determined by the recalculation.

Prior to the issuance of the certificate of correction, the USPTO will afford patentee an opportunity to be heard and request reconsideration. Accordingly, patentee has **one month or thirty (30) days**, whichever is longer, to file a request for reconsideration of this patent term adjustment calculation. See 35 U.S.C. 154(b)(3)(B)(ii) and 37 CFR 1.322(a)(4). No extensions of time will be granted under 37 CFR 1.136.

Patentee should use document code PET.OP if electronically filing a request for reconsideration of this patent term adjustment calculation. The patentee must also include the information required by 37 CFR 1.705(b)(2) and the fee required by 37 CFR 1.18(e). If patentee does not file a timely request for reconsideration of this patent term adjustment calculation including the information required by 37 CFR 1.705(b)(2) and the fee required by 37 CFR 1.18(e), the USPTO will issue a certificate of correction reflecting the PTA determination noted above.

Patentee should be aware that in order to preserve the right to review in the United States District Court for the District of Columbia of the USPTO patent term adjustment determination, patentee must ensure that he or she also take the steps required under 35 U.S.C. 154(b)(4)(A) in a timely manner. Nothing in the request for recalculation should be construed as providing an alternative time frame for commencing a civil action under 35 U.S.C. 154(b)(4)(A).

Any questions concerning this decision should be directed to the Office of Patent Legal Administration at 571-272-7702.

UNITED STATES PATENT AND TRADEMARK OFFICE

COMMISSIONER FOR PATENTS
UNITED STATES PATENT AND TRADEMARK OFFICE
P.O. BOX 1450
ALEXANDRIA, VA 22313-1450
www.uspto.gov

MAR 24 2004

STEPHEN B. MAEBIUS
FOLEY AND LARDNER
SUITE 500
3000 K STREET NW
WASHINGTON DC 20007

In re Application of	:
Serengulam V. Govindam	:
Serial No.: 10/411,370	: WITHDRAWAL OF ATTORNEY
Filed: April 11, 2003	:
Attorney Docket No.: 018733-1221	:

This is in response to applicants' attorneys' request, filed February 26, 2004, to withdraw from representation in the above identified application.

37 CFR 10.40 Withdrawal from employment.
(b) Mandatory withdrawal . A practitioner representing a client before the Office shall withdraw from employment if:
(1) The practitioner knows or it is obvious that the client is bringing a legal action, commencing a proceeding before the Office, conducting a defense, or asserting a position in litigation or any proceeding pending before the Office, or is otherwise having steps taken for the client, merely for the purpose of harassing or maliciously injuring any person;
(2) The practitioner knows or it is obvious that the practitioner's continued employment will result in violation of a Disciplinary Rule;
(3) The practitioner's mental or physical condition renders it unreasonably difficult for the practitioner to carry out the employment effectively; or
(4) The practitioner is discharged by the client.
(c) Permissive withdrawal. If paragraph (b) of this section is not applicable, a practitioner may not request permission to withdraw in matters pending before the Office unless such request or such withdrawal is because:
(1) The petitioner's client:
(i) Insists upon presenting a claim or defense that is not warranted under existing law and cannot be supported by good faith argument for an extension, modification, or reversal of existing law;
(ii) Personally seeks to pursue an illegal course of conduct;
(iii) Insists that the practitioner pursue a course of conduct that is illegal or that is prohibited under a Disciplinary Rule;
(iv) By other conduct renders it unreasonably difficult for the practitioner to carry out the employment effectively;
(v) Insists, in a matter not pending before a tribunal, that the practitioner engage in conduct that is contrary to the judgment and advice of the practitioner but not prohibited under the Disciplinary Rule; or
(vi) Has failed to pay one or more bills rendered by the practitioner for an unreasonable period of time or has failed to honor an agreement to pay a retainer in advance of the performance of legal services.
(2) The practitioner's continued employment is likely to result in a violation of a Disciplinary Rule;
(3) The practitioner's inability to work with co-counsel indicates that the best interests of the client likely will be served by withdrawal;
(4) The practitioner's mental or physical condition renders it difficult for the practitioner to carry out the employment effectively;
(5) The practitioner's client knowingly and freely assents to termination of the employment; or

(6) The practitioner believes in good faith, in a proceeding pending before the Office, that the Office will find the existence of other good cause for withdrawal.

Applicants' attorney has provided no reason for withdrawal, as required.

The request to withdraw is **DISMISSED**.

Should there be any questions with regard to this letter please contact William R. Dixon, Jr. by letter addressed to the Director, Technology Center 1600, PO BOX 1450, ALEXANDRIA, VA 22313-1450, or by telephone at 571-272-0519 or by facsimile transmission at Office facsimile number.

William R. Dixon, Jr.
Special Program Examiner
Technology Center 1600

UNITED STATES PATENT AND TRADEMARK OFFICE

Commissioner for Patents
United States Patent and Trademark Office
P.O. Box 1450
Alexandria, VA 22313-1450
www.uspto.gov

SEP 17 2004

James T. Robinson
Exclusivity-Law, Inc.
222 East Main Street
Norman OK 73069-1303

In re Application of	:	
Charles M. Bisbee	:	
Serial No. 10/411,404	:	DECISION ON PETITION
Filed: April 10, 2003	:	
Title: Urine Collection Bag Support	:	

This is in response to applicants' petition filed April 10, 2003, to make the above-identified application special under the provisions of 37 CFR 1.102(c), based on the age of the applicant.

Applicant has satisfied the provisions set forth in M.P.E.P. 708.02, IV. Therefore the petition is **GRANTED**.

The application will be forwarded to the examiner for action on the merits commensurate with this decision.

Should there be any questions with regard to this letter please contact John Kittle by letter addressed to the Director, Technology Center 3700/2900, P.O. Box 1450 Alexandria, VA 22313-1450, or by telephone at (703) 308-0873 or by facsimile transmission at (703) 308-3139.

John E. Kittle

John E. Kittle
Director
Technology Center 3700/2900

UNITED STATES PATENT AND TRADEMARK OFFICE

COMMISSIONER FOR PATENTS
UNITED STATES PATENT AND TRADEMARK OFFICE
P.O. BOX 1450
ALEXANDRIA, VA 22313-1450
www.uspto.gov

MAIL

APR 18 2008

DIRECTOR'S OFFICE
TECHNOLOGY CENTER 2600

Mark J. Pandiscio
Pandiscio & Pandiscio, P.C.
470 Totten Pond Road
Waltham MA 02451-1914

In re Application of
HURLEY, PETER, et al
Serial No.: **10/411,430**
Filed: **April 10, 2003**
For: **SYSTEM AND METHOD FOR VISUALIZING DATA**

DECISION ON PETITION
ACCEPTANCE OF COLOR DRAWINGS

This is a decision on the petition under 37 C.F.R. § 1.84(a)(2), filed January 14, 2008, 2008, requesting acceptance of color drawings.

The petition requests that the color drawings identified in figures 2 - 9, accepted in lieu of black and white drawings.

A grantable petition under 37 C.F.R. §1.84(a)(2) must be accompanied by a fee set forth under 37 C.F.R. § 1.17(h), 3(three) set of the color drawings in question, and the specification must contain, or be amended to contain, the following language as the first paragraph in that portion of the specification relating to the brief description of the drawings:

"The file of this patent contains at least one drawing executed in color. Copies of this patent with color drawing(s) will be provided by the Patent and Trademark Office upon request and payment of the necessary fee."

The petition is GRANTED.

Kenneth Wieder
Special Program Examiner
Technology Center 2600
Communications

UNITED STATES PATENT AND TRADEMARK OFFICE

UNITED STATES DEPARTMENT OF COMMERCE
United States Patent and Trademark Office
Address: COMMISSIONER FOR PATENTS
P.O. Box 1450
Alexandria, Virginia 22313-1450
www.uspto.gov

LENOVO (US) IP Law
1009 Think Place
Building One, 4th Floor 4B6
Morrisville, NC 27560

Mail Date: 04/21/2010

Applicant	: Ryan Charles Catherman	: DECISION ON REQUEST FOR
Patent Number	: 7590870	: RECALCULATION of PATENT
Issue Date	: 09/15/2009	: TERM ADJUSTMENT IN VIEW
Appliction No	: 10/411,454	: OF WYETH AND NOTICE OF INTENT TO
Filed	: 04/10/2003	: ISSUE CERTIFICATE OF CORRECTION
		:

The Request for Recalculation is **GRANTED** to the extent indicated.

The patent term adjustment has been determined to be **1923** days. The USPTO will *sua sponte* issue a certificate of correction reflecting the amount of PTA days determined by the recalculation.

Prior to the issuance of the certificate of correction, the USPTO will afford patentee an opportunity to be heard and request reconsideration. Accordingly, patentee has **one month or thirty (30) days**, whichever is longer, to file a request for reconsideration of this patent term adjustment calculation. See 35 U.S.C. 154(b)(3)(B)(ii) and 37 CFR 1.322(a)(4). No extensions of time will be granted under 37 CFR 1.136.

Patentee should use document code PET.OP if electronically filing a request for reconsideration of this patent term adjustment calculation. The patentee must also include the information required by 37 CFR 1.705(b)(2) and the fee required by 37 CFR 1.18(e). If patentee does not file a timely request for reconsideration of this patent term adjustment calculation including the information required by 37 CFR 1.705(b)(2) and the fee required by 37 CFR 1.18(e), the USPTO will issue a certificate of correction reflecting the PTA determination noted above.

Patentee should be aware that in order to preserve the right to review in the United States District Court for the District of Columbia of the USPTO patent term adjustment determination, patentee must ensure that he or she also take the steps required under 35 U.S.C. 154(b)(4)(A) in a timely manner. Nothing in the request for recalculation should be construed as providing an alternative time frame for commencing a civil action under 35 U.S.C. 154(b)(4)(A).

Any questions concerning this decision should be directed to the Office of Patent Legal Administration at 571-272-7702.

SPE RESPONSE FOR CERTIFICATE OF CORRECTION

Paper No.: _____

DATE : 1-22-07

TO SPE OF : ART UNIT 2121

SUBJECT : Request for Certificate of Correction for Appl. No.: 10/411485 Patent No.: 7133855

Please respond to this request for a certificate of correction within 7 days.

Please review the requested changes/corrections as shown in the **COCIN** document(s) in the IFW application image. No new matter should be introduced, nor should the scope or meaning of the claims be changed.

Please check Cols.

Please complete the response (see below) and forward the completed response to scanning using document code **COCX**.

E. Yong

Certificates of Correction Branch

703-308-9390 ext. 117

Thank You For Your Assistance

The request for issuing the above-identified correction(s) is hereby:

Note your decision on the appropriate box.

☒ Approved	All changes apply.
☐ Approved in Part	Specify below which changes do not apply.
☐ Denied	State the reasons for denial below.

Comments: _____

SPE

2121

Art Unit

UNITED STATES PATENT AND TRADEMARK OFFICE

Commissioner for Patents
United States Patent and Trademark Office
P.O. Box 1450
Alexandria, VA 22313-1450
www.uspto.gov
DIW May-06

MINTZ, LEVIN, COHN, FERRIS, GLOVSKY
AND POPEO, P.C.
ONE FINANCIAL CENTER
BOSTON MA 02111

COPY MAILED
MAY 2 2 2006
OFFICE OF PETITIONS

In re Application of	:	
Fournier et al.	:	
Application No. 10/411,493	:	DECISION ON PETITION
Filed: 10 April, 2003	:	
Atty Docket No. 18133-180	:	

This is a decision on the petition filed on 7 March, 006, under 37 CFR 1.137(b),[1] to revive the above-identified application.

The petition is **GRANTED**.

The application became abandoned on 29 October, 2005, for failure to timely a reply to the non-final Office action mailed on 28 July, 2005, which set a three (3) month shortened statutory period for reply. No extensions of time in accordance with 37 CFR 1.136(a) were obtained. Notice of Abandonment was mailed on 1 March, 2006.

An amendment has been filed as the required reply.

---

[1] Effective December 1, 1997, the provisions of 37 CFR 1.137(b) now provide that where the delay in reply was unintentional, a petition may be filed to revive an abandoned application or a lapsed patent pursuant to 37 CFR 1.137(b). A grantable petition filed under the provisions of 37 CFR 1.137(b) must be accompanied by:

(1) the required reply, unless previously filed. In a nonprovisional application abandoned for failure to prosecute, the required reply may be met by the filing of a continuing application. In a nonprovisional utility or plant application filed on or after June 8, 1995, and abandoned for failure to prosecute, the required reply may also be met by the filing of a request for continuing examination in compliance with § 1.114. In an application or patent, abandoned or lapsed for failure to pay the issue fee or any portion thereof, the required reply must be the payment of the issue fee or any outstanding balance thereof. In an application, abandoned for failure to pay the publication fee, the required reply must include payment of the publication fee.

(2) the petition fee as set forth in 37 CFR 1.17(m);

(3) a statement that the entire delay in filing the required reply from the due date for the reply until the filing of a grantable petition pursuant to 37 CFR 1.137(b) was unintentional. The Commissioner may required additional information where there is a question whether the delay was unintentional; and

(4) any terminal disclaimer (and fee as set forth in 37 CFR 1.20(d)) required pursuant to 37 CFR 1.137(c)).

This application is being referred to Technology Center 2836 for further processing.

Telephone inquiries concerning this matter may be directed to the undersigned at (571) 272-3231.

Douglas I. Wood
Senior Petitions Attorney
Office of Petitions

UNITED STATES PATENT AND TRADEMARK OFFICE

COMMISSIONER FOR PATENTS
UNITED STATES PATENT AND TRADEMARK OFFICE
WASHINGTON, DC 20231
www.uspto.gov

Pandiscio & Pandiscio
470 Totten Pond Road
Waltham, MA 02451-1914

MAIL

MAY 22 2007

DIRECTOR'S OFFICE
TECHNOLOGY CENTER 2600

In re Application of
Hurley, Peter *et al.*
Serial No.: 10/411,499
Filed: April 10, 2003
For: **SYSTEM AND METHOD FOR VISUALIZING DATA**

DECISION ON PETITION
ACCEPTANCE OF COLOR DRAWINGS

This is a decision on the petition under 37 C.F.R. § 1.84(a)(2) filed February 26, 2007 requesting acceptance of color drawings.

The petition requests that the color drawings identified in Figure 1 - 8 be accepted in lieu of black and white drawings.

A grantable petition under 37 C.F.R. §1.84(a)(2) must be accompanied by a fee set forth under 37 C.F.R. § 1.17(h), 3 (three) sets of the color drawings in question, and the specification must contain, or be amended to contain, the following language as the first paragraph in that portion of the specification relating to the brief description of the drawings:

"The file of this patent contains at least one drawing executed in color. Copies of this patent with color drawing(s) will be provided by the Patent and Trademark Office upon request and payment of the necessary fee."

The petition is **GRANTED**.

Krista Zele
Special Program Examiner
Technology Center 2600
Communications

SPE RESPONSE FOR CERTIFICATE OF CORRECTION

Paper No.: _____

DATE : 12-07-09

TO SPE OF : ART UNIT 2188

SUBJECT : Request for Certificate of Correction for Appl. No.: 10/411500 Patent No.: 6760823

Please respond to this request for a certificate of correction within 7 days.

FOR IFW FILES:

Please review the requested changes/corrections as shown in the **COCIN** document(s) in the IFW application image. No new matter should be introduced, nor should the scope or meaning of the claims be changed.

Please complete the response (see below) and forward the completed response to scanning using document code **COCX**.

FOR PAPER FILES:

Please review the requested changes/corrections as shown in the attached certificate of correction. Please complete this form (see below) and forward it with the file to:

Certificates of Correction Branch (CofC)
Randolph Square – 9D10-A
Palm Location 7580

Angela Green 703-756-1541
Certificates of Correction Branch
703-756-1814

Thank You For Your Assistance

The request for issuing the above-identified correction(s) is hereby:
Note your decision on the appropriate box.

- [X] **Approved** — **All** changes apply.
- [ ] **Approved in Part** — Specify below which changes **do not** apply.
- [ ] **Denied** — State the reasons for denial below.

Comments: No new matter added. Does not change Scope of Claims.

SANJIV SHAH
SUPERVISORY PATENT EXAMINER
TECHNOLOGY CENTER 2100

2185
Art Unit

Atty. Dckt. No. EMC-004AUS
Confirmation No. 4013

PTO/SB/44 (09-07)
Approved for use through 08/31/2010. OMB 0651-0033
U.S. Patent and Trademark Office; U.S. DEPARTMENT OF COMMERCE
Under the Paperwork Reduction Act of 1995, no persons are required to respond to a collection of information unless it displays a valid OMB control number.
(Also Form PTO-1050)

UNITED STATES PATENT AND TRADEMARK OFFICE
CERTIFICATE OF CORRECTION

PATENT NO. : 6,760,823 B1

APPLICATION NO.: 10/411,500

ISSUE DATE : July 6, 2004

INVENTOR(S) : Neil F. Schutzman

It is certified that an error appears or errors appear in the above-identified patent and that said Letters Patent is hereby corrected as shown below:

Column 2, lines 42-43 delete "entitled Logical Restore from a Physical Backup in Computer Storage System." and replace with --entitled "Logical Restore from a Physical Backup in a Computer Storage System."--

Column 2, lines 44-45 delete EMC Data Manager: Symmetrix Connect User Guide, and replace with -- "EMC Data Manager: Symmetrix Connect User Guide,"--.

Column 3, line 27 delete "it may be".

Column 4, line 20 delete "to be back-up" and replace with --to be backed-up--.

Column 4, line 46 delete "which facilitate" and replace with --which facilitates--.

Column 5, line 19 delete "which illustrating: and replace with --which illustrates--.

Column 5, line 21 delete "which illustrating" and replace with --which illustrates--.

Column 5, line 28 delete "which illustrating: and replace with --which illustrates--.

Column 5, line 43 delete "stored striped" and replace with --stored as a striped--.

Column 6, line 22 delete "system and techniques" and replace with --system and technique--.

Column 6, line 37 delete "physical device there" and replace with --physical device, there--.

MAILING ADDRESS OF SENDER (Please do not use customer number below):
Daly, Crowley, Mofford & Durkee, LLP
354A Turnpike Street, Suite 301A
Canton, MA 02021-2714

This collection of information is required by 37 CFR 1.322, 1.323, and 1.324. The information is required to obtain or retain a benefit by the public which is to file (and by the USPTO to process) an application. Confidentiality is governed by 35 U.S.C. 122 and 37 CFR 1.14. This collection is estimated to take 1.0 hour to complete, including gathering, preparing, and submitting the completed application form to the USPTO. Time will vary depending upon the individual case. Any comments on the amount of time you require to complete this form and/or suggestions for reducing this burden, should be sent to the Chief Information Officer, U.S. Patent and Trademark Office, U.S. Department of Commerce, P.O. Box 1450, Alexandria, VA 22313-1450. DO NOT SEND FEES OR COMPLETED FORMS TO THIS ADDRESS. **SEND TO: Attention Certificate of Corrections Branch, Commissioner for Patents, P.O. Box 1450, Alexandria, VA 22313-1450.**

If you need assistance in completing the form, call 1-800-PTO-9199 and select option 2.

Atty. Dckt. No. EMC-004AUS
Confirmation No. 4013

PTO/SB/44 (09-07)
Approved for use through 08/31/2010. OMB 0651-0033
U.S. Patent and Trademark Office; U.S. DEPARTMENT OF COMMERCE
Under the Paperwork Reduction Act of 1995, no persons are required to respond to a collection of information unless it displays a valid OMB control number.
(Also Form PTO-1050)

UNITED STATES PATENT AND TRADEMARK OFFICE
CERTIFICATE OF CORRECTION

PATENT NO. : 6,760,823

APPLICATION NO.: 10/411,500

ISSUE DATE : July 6, 2004

INVENTOR(S) : Neil F. Schutzman

It is certified that an error appears or errors appear in the above-identified patent and that said Letters Patent is hereby corrected as shown below:

Column 6, line 48 delete "blocks is performed." And replace with --block is performed.--.

Column 7, line 22 delete "described in below" and replace with --described below--.

Column 7, line 29 delete "then divide" and replace with --then divided--.

Column 7, line 41 delete "in lvm segments. Each lvm" and replace with --in LVM segments. Each LVM--.

Column 7, lines 42 delete "the lvm" and replace with --the LVM--.

Column 9, line 12 delete "Referring now to 2," and replace with --Referring now to Fig. 2,--.

Column 9, line 60 delete "Continued increase in demand" and replace with --Demand--.

Column 9, line 61 delete "continuously increases." and replace with --continuously increased.--.

Column 10, line 22 delete "form EMC Corporation," and replace with --from EMC Corporation,--.

Column 10, line 25 delete "FIG. 3 a" and replace with --FIG. 3, a--.

Column 10, line 50, delete "system view the" and replace with --system views the--.

Column 11, line 12 delete "is provided is from" and replace with --is provided from--.

MAILING ADDRESS OF SENDER (Please do not use customer number below):
Daly, Crowley, Mofford & Durkee, LLP
354A Turnpike Street, Suite 301A
Canton, MA 02021-2714

This collection of information is required by 37 CFR 1.322, 1.323, and 1.324. The information is required to obtain or retain a benefit by the public which is to file (and by the USPTO to process) an application. Confidentiality is governed by 35 U.S.C. 122 and 37 CFR 1.14. This collection is estimated to take 1.0 hour to complete, including gathering, preparing, and submitting the completed application form to the USPTO. Time will vary depending upon the individual case. Any comments on the amount of time you require to complete this form and/or suggestions for reducing this burden, should be sent to the Chief Information Officer, U.S. Patent and Trademark Office, U.S. Department of Commerce, P.O. Box 1450, Alexandria, VA 22313-1450. DO NOT SEND FEES OR COMPLETED FORMS TO THIS ADDRESS. **SEND TO: Attention Certificate of Corrections Branch, Commissioner for Patents, P.O. Box 1450, Alexandria, VA 22313-1450.**

If you need assistance in completing the form, call 1-800-PTO-9199 and select option 2.

Atty. Dckt. No. EMC-004AUS
Confirmation No. 4013

PTO/SB/44 (09-07)
Approved for use through 08/31/2010. OMB 0651-0033
U.S. Patent and Trademark Office; U.S. DEPARTMENT OF COMMERCE
Under the Paperwork Reduction Act of 1995, no persons are required to respond to a collection of information unless it displays a valid OMB control number.
(Also Form PTO-1050)

UNITED STATES PATENT AND TRADEMARK OFFICE
CERTIFICATE OF CORRECTION

PATENT NO. : 6,760,823

APPLICATION NO.: 10/411,500

ISSUE DATE : July 6, 2004

INVENTOR(S) : Neil F. Schutzman

It is certified that an error appears or errors appear in the above-identified patent and that said Letters Patent is hereby corrected as shown below:

Column 11, line 38 delete "Fig. 8 a" and replace with --FIG. 8, a--.

Column 12, line 15 delete "128K to compute" and replace with --128K. To compute--.

Column 12, line 40 delete "particular apparatus. It" and replace with --particular apparatus. It should be noted that many routine program elements, such as initialization of loops and variables and the use of temporary variables are not shown. It will be appreciated by those of ordinary skill in the art that unless otherwise indicated herein, the particular sequence of steps described is illustrative only and can be varied without departing from the spirit of the invention. Thus, unless otherwise stated the steps described below are unordered meaning that, when possible, the steps can be performed in any convenient or desirable order.

Turning now to Fig. 10, one embodiment of a method of performing a backup using the system illustrated in Fig. 1 and over the direct connection 22 is shown. The method begins at a step 136, where a discovery process is performed. In the discovery process, software identifies the physical storage segments (e.g., hyper-volumes, or portions of hyper-volumes) that are required to be backed up. The software that performs the discovery phase may be located on the client 12, the storage system 20 or on an independent controller (not shown). Alternatively, custom or semi-custom hardware may be used to perform some or all of these functions.

MAILING ADDRESS OF SENDER (Please do not use customer number below):
Daly, Crowley, Mofford & Durkee, LLP
354A Turnpike Street, Suite 301A
Canton, MA 02021-2714

This collection of information is required by 37 CFR 1.322, 1.323, and 1.324. The information is required to obtain or retain a benefit by the public which is to file (and by the USPTO to process) an application. Confidentiality is governed by 35 U.S.C. 122 and 37 CFR 1.14. This collection is estimated to take 1.0 hour to complete, including gathering, preparing, and submitting the completed application form to the USPTO. Time will vary depending upon the individual case. Any comments on the amount of time you require to complete this form and/or suggestions for reducing this burden, should be sent to the Chief Information Officer, U.S. Patent and Trademark Office, U.S. Department of Commerce, P.O. Box 1450, Alexandria, VA 22313-1450. DO NOT SEND FEES OR COMPLETED FORMS TO THIS ADDRESS. SEND TO: **Attention Certificate of Corrections Branch, Commissioner for Patents, P.O. Box 1450, Alexandria, VA 22313-1450.**

If you need assistance in completing the form, call 1-800-PTO-9199 and select option 2.

PTO/SB/44 (09-07)
Approved for use through 08/31/2010. OMB 0651-0033
U.S. Patent and Trademark Office; U.S. DEPARTMENT OF COMMERCE
Under the Paperwork Reduction Act of 1995, no persons are required to respond to a collection of information unless it displays a valid OMB control number.
(Also Form PTO-1050)

UNITED STATES PATENT AND TRADEMARK OFFICE
CERTIFICATE OF CORRECTION

PATENT NO. : 6,760,823

APPLICATION NO.: 10/411,500

ISSUE DATE : July 6, 2004

INVENTOR(S) : Neil F. Schutzman

It is certified that an error appears or errors appear in the above-identified patent and that said Letters Patent is hereby corrected as shown below:

At a step 138, a backup preparation phase process is performed. This backup preparation phase places the storage system 16 into a state permitting backup to be performed.

At a step 140, a backup execution phase process is performed. In this step, the actual backup of the physical storage identified at step 136 is performed. The hyper-volumes are copied from storage system 16 (Fig. 1) over the direct connection 22 (Fig. 1) to the backup storage system 20 (Fig. 1). For example, hyper-volumes may be transferred from a Symmetrix storage system 16, over a SCSI cable 22, to an EDM unit 20. The EDM unit 20 may then control storing the backed up hyper-volumes onto a tape media.

At a step 142, a backup cleanup phase is performed. The cleanup phase restores the storage system 16 to its full operational condition.

At a step 144, the backup process is completed and any remaining network or backup monitoring is performed (such as reporting results and logging information in a log file).

MAILING ADDRESS OF SENDER (Please do not use customer number below):
Daly, Crowley, Mofford & Durkee, LLP
354A Turnpike Street, Suite 301A
Canton, MA 02021-2714

This collection of information is required by 37 CFR 1.322, 1.323, and 1.324. The information is required to obtain or retain a benefit by the public which is to file (and by the USPTO to process) an application. Confidentiality is governed by 35 U.S.C. 122 and 37 CFR 1.14. This collection is estimated to take 1.0 hour to complete, including gathering, preparing, and submitting the completed application form to the USPTO. Time will vary depending upon the individual case. Any comments on the amount of time you require to complete this form and/or suggestions for reducing this burden, should be sent to the Chief Information Officer, U.S. Patent and Trademark Office, U.S. Department of Commerce, P.O. Box 1450, Alexandria, VA 22313-1450. DO NOT SEND FEES OR COMPLETED FORMS TO THIS ADDRESS. SEND TO: **Attention Certificate of Corrections Branch, Commissioner for Patents, P.O. Box 1450, Alexandria, VA 22313-1450.**

If you need assistance in completing the form, call 1-800-PTO-9199 and select option 2.

Atty. Dckt. No. EMC-004AUS
Confirmation No. 4013

PTO/SB/44 (09-07)
Approved for use through 08/31/2010. OMB 0651-0033
U.S. Patent and Trademark Office; U.S. DEPARTMENT OF COMMERCE
Under the Paperwork Reduction Act of 1995, no persons are required to respond to a collection of information unless it displays a valid OMB control number.
(Also Form PTO-1050)

UNITED STATES PATENT AND TRADEMARK OFFICE
CERTIFICATE OF CORRECTION

PATENT NO. : 6,760,823

APPLICATION NO.: 10/411,500

ISSUE DATE : July 6, 2004

INVENTOR(S) : Neil F. Schutzman

It is certified that an error appears or errors appear in the above-identified patent and that said Letters Patent is hereby corrected as shown below:

Column 16, line 59 delete "extent blocks one" and replace with --extent blocks: one--.

Column 17, line 44-45 delete "we could probably be" and replace with --that could probably be--.

Column 17, line 55 delete "Steps 252" and replace with --Step 252--.

Column 18, line 38 delete "13 it would" and replace with --13, it would--.

Column 18, line 44 delete "the hypervolume its" and replace with --the hypervolume, its--.

MAILING ADDRESS OF SENDER (Please do not use customer number below):
Daly, Crowley, Mofford & Durkee, LLP
354A Turnpike Street, Suite 301A
Canton, MA 02021-2714

This collection of information is required by 37 CFR 1.322, 1.323, and 1.324. The information is required to obtain or retain a benefit by the public which is to file (and by the USPTO to process) an application. Confidentiality is governed by 35 U.S.C. 122 and 37 CFR 1.14. This collection is estimated to take 1.0 hour to complete, including gathering, preparing, and submitting the completed application form to the USPTO. Time will vary depending upon the individual case. Any comments on the amount of time you require to complete this form and/or suggestions for reducing this burden, should be sent to the Chief Information Officer, U.S. Patent and Trademark Office, U.S. Department of Commerce, P.O. Box 1450, Alexandria, VA 22313-1450. DO NOT SEND FEES OR COMPLETED FORMS TO THIS ADDRESS. SEND TO: **Attention Certificate of Corrections Branch, Commissioner for Patents, P.O. Box 1450, Alexandria, VA 22313-1450.**

If you need assistance in completing the form, call 1-800-PTO-9199 and select option 2.

SPE RESPONSE FOR CERTIFICATE OF CORRECTION

Paper No.: _____

DATE : 10/2/06

TO SPE OF : ART UNIT 3618

SUBJECT : Request for Certificate of Correction for Appl. No.: 10411509 Patent No.: 6935651

Please respond to this request for a certificate of correction within 7 days.

Please review the requested changes/corrections as shown in the **COCIN** document(s) in the IFW application image. No new matter should be introduced, nor should the scope or meaning of the claims be changed.

Please complete the response (see below) and forward the completed response to scanning using document code **COCX**.

HENRY RANDALL
Certificates of Correction Branch
703-308-9390 ext.

Thank You For Your Assistance

The request for issuing the above-identified correction(s) is hereby:
Note your decision on the appropriate box.

- ☒ **Approved** — All changes apply.
- ☐ **Approved in Part** — Specify below which changes do not apply.
- ☐ **Denied** — State the reasons for denial below.

Comments: _____

SPE

3618
Art Unit

UNITED STATES PATENT AND TRADEMARK OFFICE

UNITED STATES DEPARTMENT OF COMMERCE
United States Patent and Trademark Office
Address: COMMISSIONER FOR PATENTS
P.O. Box 1450
Alexandria, Virginia 22313-1450
www.uspto.gov

FISH & RICHARDSON P.C.
P.O. BOX 1022
MINNEAPOLIS, MN 55440-1022

Mail Date: 04/20/2010

Applicant	: Scott R. Negley III	: DECISION ON REQUEST FOR
Patent Number	: 7624042	: RECALCULATION of PATENT
Issue Date	: 11/24/2009	: TERM ADJUSTMENT IN VIEW
Appliction No	: 10/411,524	: OF WYETH AND NOTICE OF INTENT TO
Filed	: 04/10/2003	: ISSUE CERTIFICATE OF CORRECTION
		:

The Request for Recalculation is **GRANTED** to the extent indicated.

The patent term adjustment has been determined to be **942** days. The USPTO will *sua sponte* issue a certificate of correction reflecting the amount of PTA days determined by the recalculation.

Prior to the issuance of the certificate of correction, the USPTO will afford patentee an opportunity to be heard and request reconsideration. Accordingly, patentee has **one month or thirty (30) days**, whichever is longer, to file a request for reconsideration of this patent term adjustment calculation. See 35 U.S.C. 154(b)(3)(B)(ii) and 37 CFR 1.322(a)(4). No extensions of time will be granted under 37 CFR 1.136.

Patentee should use document code PET.OP if electronically filing a request for reconsideration of this patent term adjustment calculation. The patentee must also include the information required by 37 CFR 1.705(b)(2) and the fee required by 37 CFR 1.18(e). If patentee does not file a timely request for reconsideration of this patent term adjustment calculation including the information required by 37 CFR 1.705(b)(2) and the fee required by 37 CFR 1.18(e), the USPTO will issue a certificate of correction reflecting the PTA determination noted above.

Patentee should be aware that in order to preserve the right to review in the United States District Court for the District of Columbia of the USPTO patent term adjustment determination, patentee must ensure that he or she also take the steps required under 35 U.S.C. 154(b)(4)(A) in a timely manner. Nothing in the request for recalculation should be construed as providing an alternative time frame for commencing a civil action under 35 U.S.C. 154(b)(4)(A).

Any questions concerning this decision should be directed to the Office of Patent Legal Administration at 571-272-7702.

SPE RESPONSE FOR CERTIFICATE OF CORRECTION

Paper No.: _____

DATE : 4/1/09

TO SPE OF : ART UNIT 3616

SUBJECT : Request for Certificate of Correction for Appl. No.: 10411526 Patent No.: 6830116 B2

Please respond to this request for a certificate of correction within 7 days.

FOR IFW FILES:

Please review the requested changes/corrections as shown in the **COCIN** document(s) in the IFW application image. No new matter should be introduced, nor should the scope or meaning of the claims be changed.

Please complete the response (see below) and forward the completed response to scanning using document code **COCX**.

FOR PAPER FILES:

Please review the requested changes/corrections as shown in the attached certificate of correction. Please complete this form (see below) and forward it with the file to:

Certificates of Correction Branch (CofC)
South Tower - 9A22
Palm Location 7580

You can fax the Directors/SPE response to 571-270-9990

LAMONTE NEWSOME
Certificates of Correction Branch
703-308-9390 ext. 112

Thank You For Your Assistance

The request for issuing the above-identified correction(s) is hereby:
Note your decision on the appropriate box.

x	**Approved**	**All** changes apply.
❑	**Approved in Part**	Specify below which changes **do not** apply.
❑	**Denied**	State the reasons for denial below.

Comments: APPROVED

SPE RESPONSE FOR CERTIFICATE OF CORRECTION

/Paul N. Dickson/ AU 3616

SPE **Art Unit**

UNITED STATES PATENT AND TRADEMARK OFFICE

Commissioner for Patents
United States Patent and Trademark Office
P.O. Box 1450
Alexandria, VA 22313-1450
www.uspto.gov

031605

TEXAS INSTRUMENTS INCORPORATED
P O BOX 655474, M/S 3999
DALLAS TX 75265

APR 1 5 2005

In re Application of:
Lamson et al.
Serial No.: 10/411,531
Filed: April 10, 2003
Attorney Docket No.: **TI-29385A**

DECISION ON PETITION TO WITHDRAW HOLDING OF ABANDONMENT

This is a decision on the petition under 37 C.F.R. § 1.137(b) filed on June 2, 2004. The petition has been treated as a petition under 37 C.F.R. § 1.181, to withdraw the holding of abandonment of the above-identified application. No fee is required.

The petition is **GRANTED**.

The application was held abandoned for failure to timely file a response to the Office action mailed on October 3, 2003. A Notice of Abandonment was mailed on May 18, 2004.

Petitioner asserts that a response was timely filed by facsimile transmission on January 26, 2004. To support this assertion, petitioner has submitted 1) a copy of the response including an amendment, petition for extension of time, and terminal disclaimer, 2) a copy of a certificate under 37 C.F.R. § 1.8(a) showing a date of transmission on January 26, 2004, and 3) a copy of the auto-reply facsimile transmission from the USPTO confirming successful transmission of the response.

A review of the application file reveals that petitioner provided the incorrect Serial No. "10/441,531" on both the petition and the response filed January 26, 2004. However, a minor error in the identification of the application can be corrected by the Office provided the correct identification can be quickly discovered. M.P.E.P. § 502. In this instance, the attorney docket number and title should have resulted in the response being correctly matched with the application. Petitioner should make special note to provide the correct serial number on future correspondence.

For the above stated reason, the petition is granted. The Notice of Abandonment is hereby vacated and the holding of abandonment withdrawn. The application is restored to pending status.

The application file is being forwarded to the examiner of record for consideration of the response and prompt appropriate action.

Inquiries regarding this decision should be directed to Clayton E. LaBalle, Special Programs Examiner, at (571) 272-1594.

James L. Dwyer, Director
Technology Center 2800
Semiconductors, Electrical and Optical
Systems and Components

SPE RESPONSE FOR CERTIFICATE OF CORRECTION

Paper No.: _____

DATE : **10/25/2007**

TO SPE OF : ART UNIT **2600 (2615)**

SUBJECT : Request for Certificate of Correction on Patent No.: **7,221,766**

Attn: Ping Lee

A response is requested with respect to the accompanying request for a certificate of correction.

Please complete this form and forward within **7** days to: **Scanning customer Support**

Send copy also via PTO mail to:
Certificates of Correction Branch – 2900 South Tower 9A39A
Palm location **7580** - Tel. No. 308-8309

With respect to the change(s) requested, correcting Office and/or Applicant's errors, should the patent read as shown in the certificate of correction? No new matter should be introduced, nor should the scope or meaning of the claims be changed.

Ok to enter changes as req. in COCIN? In eDan/Madras.

Ernest C. White, LIE - 308-9390x122
Certificates of Correction Branch

Thank You For Your Assistance

The request for issuing the above-identified correction(s) is hereby:
Note your decision on the appropriate box.

- ☒ **Approved** — **All** changes apply.
- ☐ **Approved in Part** — Specify below which changes **do not** apply.
- ☐ **Denied** — State the reasons for denial below.

Comments:

PTO/SB/44 (04-05)
Approved for use through 04/30/2007. OMB 0651-0033
U.S. Patent and Trademark Office; U.S. DEPARTMENT OF COMMERCE
Under the Paperwork Reduction Act of 1995, no persons are required to respond to a collection of information unless it displays a valid OMB control number.
(Also Form PTO-1050)

UNITED STATES PATENT AND TRADEMARK OFFICE
CERTIFICATE OF CORRECTION

PATENT NO.	:	7,221,766
APPLICATION NO.	:	10/411,556
ISSUE DATE	:	May 22, 2007
INVENTOR(S)	:	Steven E. Boor

It is certified that an error appears or errors appear in the above-identified patent and that said Letters Patent is hereby corrected as shown below:

In the Claims:

At Column 5, line 11, "comprise" should be -- comprises --.

At Column 5, lines 18-21, please delete -- 2. The input buffer circuit of claim **1**, further comprising:

A parasitic capacitance buffer circuit being operably connected to parasitic diodes associated with isolating the P-wells of one or more transistors in the current limiter. -- as this claim was canceled in the Examiner's Amendment.

MAILING ADDRESS OF SENDER (Please do not use customer number below):
Anthony G. Sitko
MARSHALL, GERSTEIN & BORUN LLP
233 S. Wacker Drive, Suite 6300
Sears Tower
Chicago, Illinois 60606-6357

SEP 18 2007

PTO/SB/66 (03-09)
Approved for use through 03/31/2012. OMB 0651-0016
U.S. Patent and Trademark Office: U.S. DEPARTMENT OF COMMERCE
Under the Paperwork Reduction Act of 1995, no persons are required to respond to a collection of information unless it displays valid OMB control number.

PETITION TO ACCEPT UNINTENTIONALLY DELAYED PAYMENT OF MAINTENANCE FEE IN AN EXPIRED PATENT (37 CFR 1.378(c))

Patent Number	Issue Date (YYYY-MM-DD)	Application Number	Filing Date (YYYY-MM-DD)	Docket Number (if applicable)
6983836	2006-01-10	10411561	2003-04-10	180009.00003

CAUTION: Maintenance fee (and surcharge, if any) payment must correctly identify: (1) the patent number and (2) the application number of the actual U.S. application leading to issuance of that patent to ensure the fee(s) is/are associated with the correct patent. 37 CFR 1.366(c) and (d).

SMALL ENTITY
☐ Patentee claims, or has previously claimed, small entity status. See 37 CFR 1.27.

LOSS OF ENTITLEMENT TO SMALL ENTITY STATUS
☐ Patentee is no longer entitled to small entity status. See 37 CFR 1.27(g)

NOT Small Entity		Small Entity	
Fee	Code	Fee	Code
◉ 3 ½ year	(1551)	○ 3 ½ year	(2551)
○ 7 ½ year	(1552)	○ 7 ½ year	(2552)
○ 11 ½ year	(1553)	○ 11 ½ year	(2553)

SURCHARGE
The surcharge required by 37 CFR 1.20(i)(2) (Fee Code 1558) must be paid as a condition of accepting unintentionally delayed payment of the maintenance fee.

MAINTENANCE FEE (37 CFR 1.20(e)-(g))
The appropriate maintenance fee must be submitted with this petition.

STATEMENT
THE UNDERSIGNED CERTIFIES THAT THE DELAY IN PAYMENT OF THE MAINTENANCE FEE TO THIS PATENT WAS UNINTENTIONAL

PETITIONER(S) REQUEST THAT THE DELAYED PAYMENT OF THE MAINTENANCE FEE BE ACCEPTED AND THE PATENT REINSTATED

THIS PORTION MUST BE COMPLETED BY THE SIGNATORY OR SIGNATORIES

37 CFR 1.378(d) states: "Any petition under this section must be signed by an attorney or agent registered to practice before the Patent and Trademark Office, or by the patentee, the assignee, or other party in interest."

I certify, in accordance with 37 CFR 1.4(d)(4) that I am

◉ An attorney or agent registered to practice before the Patent and Trademark Office

○ A sole patentee

○ A joint patentee; I certify that I am authorized to sign this submission on behalf of all the other patentees.

○ A joint patentee; all of whom are signing this e-petition

○ The assignee of record of the entire interest

Patent Practitioner			
A signature of the applicant or representative is required in accordance with 37 CFR 1.33 and 10.18. Please see 37 CFR 1.4(d) for the form of the signature			
Signature	/Michael J. McGovern/	Date (YYYY-MM-DD)	2010-03-29
Name	Michael J. McGovern	Registration Number	28326

This collection of information is required by 37 CFR 1.378(c). The information is required to obtain or retain a benefit by the public which is to file (and by the USPTO to process) an application. Confidentiality is governed by 35 U.S.C. 122 and 37 CFR 1.11 and 1.14. This collection is estimated to take 1 hour to complete, including gathering, preparing, and submitting the completed application form to the USPTO. Time will vary depending upon the individual case. Any comments on the amount of time you require to complete this form and/ or suggestions for reducing this burden, should be sent to the Chief Information Officer, U.S. Patent and Trademark Office, U.S. Department of Commerce, P.O. Box 1450, Alexandria, VA 22313-1450. DO NOT SEND FEES OR COMPLETED FORMS TO THIS ADDRESS. **This form can only be used when in conjunction with EFS-Web. If this form is mailed to the USPTO, it may cause delays in reinstating the patent.**

Privacy Act Statement

The Privacy Act of 1974 (P.L. 93-579) requires that you be given certain information in connection with your submission of the attached form related to a patent application or patent. Accordingly, pursuant to the requirements of the Act, please be advised that: (1) the general authority for the collection of this information is 35 U.S.C. 2(b)(2); (2) furnishing of the information solicited is voluntary; and (3) the principal purpose for which the information is used by the U.S. Patent and Trademark Office is to process and/or examine your submission related to a patent application or patent. If you do not furnish the requested information, the U.S. Patent and Trademark Office may not be able to process and/or examine your submission, which may result in termination of proceedings or abandonment of the application or expiration of the patent.

The information provided by you in this form will be subject to the following routine uses:

1. The information on this form will be treated confidentially to the extent allowed under the Freedom of Information Act (5 U.S.C. 552) and the Privacy Act (5 U.S.C. 552a). Records from this system of records may be disclosed to the Department of Justice to determine whether the Freedom of Information Act requires disclosure of these records.

2. A record from this system of records may be disclosed, as a routine use, in the course of presenting evidence to a court, magistrate, or administrative tribunal, including disclosures to opposing counsel in the course of settlement negotiations.

3. A record in this system of records may be disclosed, as a routine use, to a Member of Congress submitting a request involving an individual, to whom the record pertains, when the individual has requested assistance from the Member with respect to the subject matter of the record.

4. A record in this system of records may be disclosed, as a routine use, to a contractor of the Agency having need for the information in order to perform a contract. Recipients of information shall be required to comply with the requirements of the Privacy Act of 1974, as amended, pursuant to 5 U.S.C. 552a(m).

5. A record related to an International Application filed under the Patent Cooperation Treaty in this system of records may be disclosed, as a routine use, to the International Bureau of the World Intellectual Property Organization, pursuant to the Patent Cooperation Treaty.

6. A record in this system of records may be disclosed, as a routine use, to another federal agency for purposes of National Security review (35 U.S.C. 181) and for review pursuant to the Atomic Energy Act (42 U.S.C. 218(c)).

7. A record from this system of records may be disclosed, as a routine use, to the Administrator, General Services, or his/her designee, during an inspection of records conducted by GSA as part of that agency's responsibility to recommend improvements in records management practices and programs, under authority of 44 U.S.C. 2904 and 2906. Such disclosure shall be made in accordance with the GSA regulations governing inspection of records for this purpose, and any other relevant (i.e., GSA or Commerce) directive. Such disclosure shall not be used to make determinations about individuals.

8. A record from this system of records may be disclosed, as a routine use, to the public after either publication of the application pursuant to 35 U.S.C. 122(b) or issuance of a patent pursuant to 35 U.S.C. 151. Further, a record may be disclosed, subject to the limitations of 37 CFR 1.14, as a routine use, to the public if the record was filed in an application which became abandoned or in which the proceedings were terminated and which application is referenced by either a published application, an application open to public inspections or an issued patent.

9. A record from this system of records may be disclosed, as a routine use, to a Federal, State, or local law enforcement agency, if the USPTO becomes aware of a violation or potential violation of law or regulation.

UNITED STATES PATENT AND TRADEMARK OFFICE

Commissioner for Patents
United States Patent and Trademark Office
P.O. Box 1450
Alexandria, VA 22313-1450
www.uspto.gov

In re Patent No. 6983836
Issue Date: January 10,2006
Application No. 10411561
Filed: April 10,2003
Attorney Docket No. 180009.00003

:
:DECISION GRANTING PETITION
:UNDER 37 CFR 1.378(c)
:

This is a decision on the electronic petition, filed March 29,2010 ,under 37 CFR 1.378(c) to accept the unintentionally delayed payment of the 3.5 year maintenance fee for the above-identified patent.

The petition is **GRANTED**.

The maintenance fee is accepted, and the above-identified patent reinstated as of March 29,2010 .
This decision also constitutes notice that the fee has been accepted. An electronic copy of the petition and this decision has been created as an entry in the Image File Wrapper. Nevertheless, petitioner should print and retain an independent copy.

Telephone inquiries related to this electronic decision should be directed to the Electronic Business Center at 1-866-217-9197.

UNITED STATES PATENT AND TRADEMARK OFFICE

Commissioner for Patents
United States Patent and Trademark Office
P.O. Box 1450
Alexandria, VA 22313-1450
www.uspto.gov

CHARLES W. CALKINS, ESQ.
KILPATRICK STOCKTON LLP
1001 WEST FOUTH ST.
WINSTON-SALEM NC 27101

COPY MAILED

AUG 0 3 2007

OFFICE OF PETITIONS

In re Patent No. 7146384 :
Issue Date: 12/05/2006 :
Application No. 10/411568 : NOTICE
Filed: 04/10/2003 :
Attorney Docket No. 41305/283186 (TTP :
2002-04 :

This is a notice regarding your request for acceptance of a fee deficiency submission under 37 CFR 1.28, filed on 23 March, 2007.

The Office no longer investigates or rejects original or reissue patent under 37 CFR 1.56. **1098 Off. Gaz. Pat. Office 502 (January 3, 1989)**. Therefore, nothing in this Notice is intended to imply that an investigation was done.

Your fee deficiency submission under 37 CFR 1.28 is hereby **ACCEPTED**.

This patent is no longer entitled to small entity status. Accordingly, all future fees paid in this patent must be paid at the large entity rate.

Inquiries related to this communication should be directed to the undersigned at (571) 272-3231.

D Wood

Douglas I. Wood
Senior Petitions Attorney
Office of Petitions

UNITED STATES PATENT AND TRADEMARK OFFICE

Commissioner for Patents
United States Patent and Trademark Office
P.O. Box 1450
Alexandria, VA 22313-1450
www.uspto.gov

Fenwick & West LLP
Silicon Valley Center
801 California Street
Mountain View, CA 94041

MAILED

NOV 0 5 2004

Technology Center 2100

In re Application of:
Carey S. NACHENBERG, et al.
Application No. 10/411,572
Filed: April 9, 2003
For: DISTINGUISHING LEGITIMATE MODIFICATIONS FROM MALICIOUS MODIFICATIONS DURING EXECUTABLE COMPUTER FILE MODIIFICATION ANALYSIS

DECISION ON REQUEST TO WITHDRAW AS ATTORNEY OR AGENT

This is a decision on the Request to Withdraw from Representation filed September 28, 2004.

A grantable request to withdraw as attorney of record should indicate thereon the present mailing addresses of the attorney(s) who is/are withdrawing from the record and of the applicant. The request for withdrawal must be signed by every attorney seeking to withdraw or contain a clear indication that one attorney is signing on behalf of another/others. A request to withdraw will not be approved unless at least 30 (thirty) days would remain between the date of approval and the later of the expiration date of a time to file a response or the expiration date of the maximum time period which can be extended under 37 C.F.R. § 1.136(a). The effective date of withdrawal being the date of decision and not the date of request. See M.P.E.P. § 402.06. 37 C.F.R. § 1.36 further requires that the applicant or patent owner be notified of the withdrawal of the attorney or agent.

The request is **GRANTED**.

All future communications from the Office will be directed to the below-listed address until otherwise notified by applicant. This correspondence address is provided by the withdrawn attorney(s). Applicant is reminded of the obligation to promptly notify the Patent and Trademark Office (Office) of any change in correspondence address to ensure receipt of all communications from the Office.

For

Vincent N. Trans
Special Program Examiner
Technology Center 2100
Computer Architecture, Software, and
Information Security
571-272-3613

cc: Sonnenscheil Nath & Rosenthal LLP
685 Market Street
6th Floor
San Francisco, CA 94105

UNITED STATES PATENT AND TRADEMARK OFFICE

COMMISSIONER FOR PATENTS
UNITED STATES PATENT AND TRADEMARK OFFICE
P.O. BOX 1450
ALEXANDRIA, VA 22313-1450
www.uspto.gov

Paper No. 7

MAIL

JUN 2 3 2004

DIRECTOR OFFICE
TECHNOLOGY CENTER 2100

Brian M. Hoffman
FENWICK & WEST L.L.P.
Silicon Valley Center
801 California Street
Mountain View, CA 94041

In re Application of:
Shaun P. Cooley
Application No. 10/411,581
Filed: April 9, 2003
For: SUPRESSING SPAM USING A MACHINE LEARNING BASED SPAM FILTER

DECISION ON REQUEST TO WITHDRAW AS ATTORNEY OR AGENT

This is a decision on the Request To Withdraw from Representation filed June 03, 2004.

A grantable request to withdraw as attorney of record should indicate thereon the present mailing addresses of the attorney(s) who is/are withdrawing from the record and of the applicant. The request for withdrawal must be signed by every attorney seeking to withdraw or contain a clear indication that one attorney is signing on behalf of another/others. A request to withdraw will not be approved unless at least 30 (thirty) days would remain between the date of approval and the later of the expiration date of a time to file a response or the expiration date of the maximum time period which can be extended under 37 C.F.R. § 1. 136(a). The effective date of withdrawal being the date of decision and not the date of request. See M.P.E.P. § 402.06. 37 C.F.R. § 1.36 further requires that the applicant or patent owner be notified of the withdrawal of the attorney or agent.

The request filed June 03, 2004 meets all the requirements. Accordingly the request is **GRANTED**.

All future communications from the Office will be directed to the below-listed address until otherwise notified by applicant. This correspondence address is provided by the withdrawn attorney(s). Applicant is reminded of the obligation to promptly notify the Patent and Trademark Office (Office) of any change in correspondence address to ensure receipt of all communications from the Office.

for James R. Matthews

Vincent N. Trans
Special Program Examiner
Technology Center 2100
Computer Architecture, Software, and
Information Security
703-305-9750

cc: Edward J. Radlo
SONNENSCHEIN NATH & ROSENTHAL LLP
685 Market Street, 6th Floor
San Francisco, CA 94105

UNITED STATES PATENT AND TRADEMARK OFFICE

Commissioner for Patents
United States Patent and Trademark Office
P.O. Box 1450
Alexandria, VA 22313-1450
www.uspto.gov

QUARLES & BRADY, LLP
411 E. WISCONSIN AVENUE
SUITE 2040
MILWAUKEE, WI 53202-4497

COPY MAILED
OCT 0 2 2006
OFFICE OF PETITIONS

In re Application of	:	
Donald T. Settergren, et. al.	:	
Application No. 10/411,584	:	ON PETITION
Filed: April 10, 2003	:	
Attorney Docket No. 390086.95312	:	

This is a decision on the petition under 37 CFR 1.137(b), filed on August 4, 2006, to revive the above-identified application.

The application became abandoned for failure to respond to the Notice of Allowance and Fee(s) Due mailed April 13, 2006.

The petition satisfies the requirements of 37 CFR 1.137(b) in that petitioner has supplied (1) the reply in the form of $1,400 for payment of the issue fee and $300 for payment of the publication fee; (2) the petition fee of $1,500; and (3) an adequate statement of unintentional delay. Therefore, the petition is **GRANTED**.

This application file is being referred to the Office of Publications for processing into a patent.

Telephone inquiries concerning this decision should be directed to the undersigned at (571) 272-3226.

Andrea Smith
Petitions Examiner
Office of Petitions

UNITED STATES PATENT AND TRADEMARK OFFICE

COMMISSIONER FOR PATENTS
UNITED STATES PATENT AND TRADEMARK OFFICE
P.O. BOX 1450
ALEXANDRIA, VA 22313-1450
www.uspto.gov

James M. Ritchey
O'Banion and Ritchey, LLP
Wells Fargo Center
400 Capitol Mall, Suite 1550
Sacramento, CA 95814

COPY MAILED
FEB 09 2006
OFFICE OF PETITIONS

In re Application of :
Brett Flickner, et. al. :
Application No. 10/411,588 : ON PETITION
Filed: April 10, 2003 :
Attorney Docket No. IBS1030.73A :

This is a decision on the petition under 37 CFR 1.137(b), filed January 3, 2006, to revive the above-identified application.

The application became abandoned for failure to timely respond to the Notice of Allowance and Fee(s) Due mailed on September 12, 2005.

The petition satisfies the requirements of 37 CFR 1.137(b) in that petitioner has supplied (1) the reply in the form of $1,400 for payment of the issue fee and $300 for payment of the publication fee; (2) the petition fee of $1,500; and (3) an adequate statement of unintentional delay. Therefore, the petition is **GRANTED**.

The Office acknowledges receipt of $30 for ten (10) advance soft copies.

This application file is being referred to the Office of Publications to be processed into a patent.

Telephone inquiries concerning this decision should be directed to the undersigned at (571) 272-3226.

Andrea Smith
Petitions Examiner
Office of Petitions

UNITED STATES PATENT AND TRADEMARK OFFICE

COMMISSIONER FOR PATENTS
UNITED STATES PATENT AND TRADEMARK OFFICE
P.O. BOX 1450
ALEXANDRIA, VA 22313-1450
www.uspto.gov

MAIL

OCT 06 2004

DIRECTOR OFFICE
TECHNOLOGY CENTER 2600

BAKER & DANIELS
300 NORTH MERIDIAN STREET
SUITE 2700
INDIANAPOLIS IN 46204-1782

In Re Application of
George K. STOOKEY, et al.
Application Serial No. 10/411,625
Filed: April 10, 2003
For: **OPTICAL DETECTION OF DENTAL CARIES**

DECISION ON PETITION TO ACCEPT COLOR PHOTOGRAPHS

This is a decision on the petition under 37 C.F.R. § 1.84(a)(2), filed April 10. 2003, requesting acceptance of color photographs.

The petition requests that the color photographs, noted as figures 12 and 13 be accepted in lieu of black and white drawings.

A grantable petition under 37 C.F.R. § 1.84(a)(2) must be accompanied by a fee set forth under 37 C.F.R. § 1.17(h), three (3) sets of the color photos in question, a black and white photocopy of said photos, and the specification must contain, or be amended to contain, the following language as the first paragraph in that portion of the specification relating to the brief description of the drawings:

" The patent or application file contains at least one drawing executed in color. Copies of this patent or patent application publication with color drawing(s) will be provided by the Office upon request and payment of the necessary fee."

Petitioner has met the requirements set forth above. Accordingly, the petition is **Granted**.

Kenneth A. Wieder
Special Program Examiner
Technology Center 2600
Communications

UNITED STATES PATENT AND TRADEMARK OFFICE

Commissioner for Patents
United States Patent and Trademark Office
P.O. Box 1450
Alexandria, VA 22313-1450
www.uspto.gov

SIERRA PATENT GROUP, LTD.
1657 HWY 395, SUITE 202
MINDEN NV 89423

COPY MAILED

DEC 2 1 2005

OFFICE OF PETITIONS

In re Application of
Richard B. Merrill et al.
Application No. 10/411,628
Filed: April 11, 2003
Attorney Docket No. FOV-053CIE

: DECISION ON PETITION
: UNDER 37 CFR 1.78(a)(6)

This is a decision on the petition under 37 CFR 1.78(a)(6) filed May 31, 2005, to accept an unintentionally delayed claim under 35 U.S.C. §119(e) for the benefit of the prior-filed provisional application set forth in the concurrently filed amendment.

The petition is **GRANTED**.

A petition under 37 CFR 1.78(a)(6) is only applicable to those applications filed on or after November 29, 2000. Further, the petition is appropriate only after expiration of the period specified in 37 CFR 1.78(a)(5)(ii) and must be filed during the pendency of the nonprovisional application. In addition, the petition must be accompanied by:

(1) the reference required by 35 U.S.C. § 119(e) and 37 CFR 1.78(a)(5)(i) to the prior-filed application, unless previously submitted;
(2) the surcharge set forth in § 1.17(t); and
(3) a statement that the entire delay between the date the claim was due under 37 CFR 1.78(a)(5)(ii) and the date the claim was filed was unintentional. The Commissioner may require additional information where there is a question whether the delay was unintentional.

The instant nonprovisional application was filed after November 29, 2000, and the claim herein for the benefit of priority to the prior-filed provisional application is submitted after expiration of the period specified in 37 CFR 1.78(a)(5)(ii). Therefore, this is a proper petition under 37 CFR 1.78(a)(6).

The instant nonprovisional application was pending at the time of filing of the reference to the prior-filed provisional application as required by 37 CFR 1.78(a)(5)(iii). Additionally, the instant nonprovisional application is a continuation-in-part of application no. 09/884,863 which claims the benefit of Application No. 60/235,249 and was filed June 18, 2001, within twelve months of the filing date of the prior-filed provisional application, which was filed on September 25, 2000.

The petition complies with the requirements for a grantable petition under 37 CFR 1.78(a)(6) in that (1) a reference to the above-noted, prior-filed provisional application has been included in an application data sheet, as provided by 37 CFR 1.78(a)(5)(iii); (2) the surcharge fee required by 37 CFR 1.17(t) has been submitted; and (3) the petition contains a proper statement of unintentional delay. Accordingly, having found that the instant petition for acceptance of an unintentionally delayed claim for the benefit of priority under 35 U.S.C. § 119(e) to the above-noted, prior-filed provisional application satisfies the conditions of 37 CFR 1.78(a)(6), the petition is granted.

The granting of the petition to accept the delayed benefit claim to the prior-filed application under 37 CFR 1.78(a)(6) should not be construed as meaning that the instant application is entitled to the benefit of the filing date of the prior-filed application. In order for the instant application to be entitled to the benefit of the prior-filed application, all other requirements under 35 U.S.C. §119(e) and 37 CFR 1.78(a)(4) and (a)(5) must be met. Similarly, the fact that the corrected Filing Receipt accompanying this decision on petition includes the prior-filed application should not be construed as meaning that applicant is entitled to the claim for benefit of priority to the prior-filed application noted thereon. Accordingly, the examiner will, in due course, consider this benefit claim and determine whether the instant application is entitled to the benefit of the earlier filing date.

A corrected Filing Receipt, which includes the priority claim to the prior-filed provisional application, accompanies this decision on petition.

Any inquiries concerning this decision may be directed to Senior Petitions Attorney Patricia Faison-Ball at (571) 272-3212. All other inquiries concerning either the examination procedures or status of the application should be directed to the Technology Center.

The application is being forwarded to Technology Center AU 2823 for appropriate action on the amendment submitted May 31, 2005, including consideration by the examiner of the claim under 35 U.S.C. §119(e) for the benefit of priority to prior-filed provisional Application No. 60/235,249.

Frances Hicks

Frances Hicks
Petitions Examiner
Office of Petitions

ATTACHMENT: Corrected Filing Receipt

UNITED STATES PATENT AND TRADEMARK OFFICE

Commissioner for Patents
United States Patent and Trademark Office
P.O. Box 1450
Alexandria, VA 22313-1450
www.uspto.gov

COPY MAILED

MAY 21 2009

OFFICE OF PETITIONS

Siemens Corporation
Intellectual Property Department
170 Wood Avenue South
Iselin NJ 08830

In re Application of	:	
WRIGHT et al.	:	
Application No. 10/411,638	:	DECISION ON PETITION
Filed: 04/11/2003	:	
Attorney Docket No. 2003P05450US	:	

This is a decision on the petition under 37 CFR 1.181, filed December 10, 2008, to withdraw the holding of abandonment.

On May 1, 2008, the Office mailed a final Office action, which set a three-month shortened statutory period to reply. In the apparent absence of a timely reply, the application became abandoned on August 2, 2008. A Notice of Abandonment was mailed on November 26, 2008. On December 10, 2008, petitioner filed the present petition to withdraw the holding of abandonment in the above-identified application.

Petitioners assert that they submitted a timely reply to the final Office action in the form of an amendment via facsimile transmission on June 30, 2008. Petitioners submitted a copy of the facsimile cover sheet, bearing a certificate of mailing dated June 30, 2008, a copy of the Office's Auto-Reply Facsimile Transmission of June 30, 2008, and a copy of the previously transmitted amendment in response to the final Office action. The certificate of facsimile of June 30, 2008, would have rendered the reply timely filed if received in the USPTO; however, the original reply was not located in the file.

DISCUSSION

Initially, the Office must determine whether the application is, in fact, abandoned. Namely, the Office must review the present petition to evaluate if petitioners' assertions merely involve the cause of the abandonment. Therefore, where there is no dispute as to whether an application is abandoned because no disagreement exists regarding the sufficiency of the reply or controlling dates, the filing of a petition under 37 CFR 1.181(a) to withdraw the holding of abandonment would be inappropriate. See

MPEP 711.03(c)(I). Instead, a petition under 37 CFR 1.137 (accompanied by the appropriate petition fee) is necessary to revive the abandoned application. See MPEP 711.03(c)(I).

Upon reviewing petitioners' response to the final Office action, the Examiner issued an Advisory Action Before the Filing of an Appeal Brief, which is enclosed. As stated in the Advisory Action, petitioners' reply filed on June 30, 2008, and resubmitted on December 10, 2008, failed to place this application in condition for allowance. A response to a final Office action may be entered if it places the application in condition for allowance. However, the admission or refusal to admit an amendment after a final rejection will not operate to relieve the application from its condition. Further, the entry of an amendment after a final rejection is not a matter of right.

In the present case, it is regrettable that the Office did not mail an Advisory Action until the date of this decision; however, it is clear from 37 CFR 1.116 that abandonment of an application is risked when an amendment is filed after a final Office action. Abandonment takes place by operation of law for failure to timely submit a proper reply to an Office action, not by the mailing of an Office communication, such an Advisory Action.[1] The mere filing of an amendment in response to a final Office action does not save the application from abandonment. Rather, the filing of a Notice of Appeal, a Request for Continued Examination accompanied by a proper submission, or a continuing application in response to a final rejection guarantees the pendency of the application.

CONCLUSION

The application is currently abandoned due to petitioners' failure to submit a proper response to the final Office action. Under the circumstances of this case, the application did not become abandoned due to a delay in reviewing the amendment or the mailing of the Advisory Action or any other error on the part of the U.S. Patent and Trademark Office. Accordingly, the petition to withdraw the holding of abandonment is **dismissed**. The application will remain abandoned until petitioners file a petition to revive the application (accompanied by the appropriate petition fee).

The Office encourages petitioner to file a petition under 37 CFR 1.137(b) on the basis of unintentional delay. A grantable petition under 37 CFR 1.137(b) must be accompanied by:

(1) The required reply to the outstanding Office action;

(2) The petition fee as set forth in 1.17(m);

(3) A statement that the entire delay in filing the required reply from the due date for the reply until the filing of a grantable petition was unintentional.

Further correspondence with respect to this matter should be addressed as follows:

[1] MPEP 711.03(c). See Lorenz v. Finkl, 333 F.2d 885, 889-90, 142 USPQ 26, 299-30 (CCPA 1964); Krahn v. Comm'r, 15 USPQ2d 1823, 1824 (E.D. Va. 1990); In re Application of Fischer, 6 USPQ2d 1573, 1574 (Comm'r Pat. 1984).

By mail: Mail Stop Petition
Commissioner for Patents
P.O. Box 1450
Alexandria, VA 22313-1450

By FAX: (571) 273-8300
Attn: Office of Petitions

By hand: Customer Service Window
Randolph Building
401 Dulany Street
Alexandria, VA 22314

Correspondence may also be submitted via the Electronic Filing System of the USPTO.

Telephone inquiries related to this decision should be directed to the undersigned at (571) 272-3211.

Christina Tartera Donnell

Christina Tartera Donnell
Senior Petitions Attorney
Office of Petitions

Advisory Action Before the Filing of an Appeal Brief	Application No. 10/411,638	Applicant(s) WRIGHT ET AL.	
	Examiner EVENS J. AUGUSTIN	Art Unit 3621	

--The MAILING DATE of this communication appears on the cover sheet with the correspondence address --

THE REPLY FILED 10 December 2008 FAILS TO PLACE THIS APPLICATION IN CONDITION FOR ALLOWANCE.

1. ☒ The reply was filed after a final rejection, but prior to or on the same day as filing a Notice of Appeal. To avoid abandonment of this application, applicant must timely file one of the following replies: (1) an amendment, affidavit, or other evidence, which places the application in condition for allowance; (2) a Notice of Appeal (with appeal fee) in compliance with 37 CFR 41.31; or (3) a Request for Continued Examination (RCE) in compliance with 37 CFR 1.114. The reply must be filed within one of the following time periods:
   a) ☒ The period for reply expires 3 months from the mailing date of the final rejection.
   b) ☐ The period for reply expires on: (1) the mailing date of this Advisory Action, or (2) the date set forth in the final rejection, whichever is later. In no event, however, will the statutory period for reply expire later than SIX MONTHS from the mailing date of the final rejection.

   Examiner Note: If box 1 is checked, check either box (a) or (b). ONLY CHECK BOX (b) WHEN THE FIRST REPLY WAS FILED WITHIN TWO MONTHS OF THE FINAL REJECTION. See MPEP 706.07(f).

Extensions of time may be obtained under 37 CFR 1.136(a). The date on which the petition under 37 CFR 1.136(a) and the appropriate extension fee have been filed is the date for purposes of determining the period of extension and the corresponding amount of the fee. The appropriate extension fee under 37 CFR 1.17(a) is calculated from: (1) the expiration date of the shortened statutory period for reply originally set in the final Office action; or (2) as set forth in (b) above, if checked. Any reply received by the Office later than three months after the mailing date of the final rejection, even if timely filed, may reduce any earned patent term adjustment. See 37 CFR 1.704(b).

NOTICE OF APPEAL

2. ☐ The Notice of Appeal was filed on _____. A brief in compliance with 37 CFR 41.37 must be filed within two months of the date of filing the Notice of Appeal (37 CFR 41.37(a)), or any extension thereof (37 CFR 41.37(e)), to avoid dismissal of the appeal. Since a Notice of Appeal has been filed, any reply must be filed within the time period set forth in 37 CFR 41.37(a).

AMENDMENTS

3. ☐ The proposed amendment(s) filed after a final rejection, but prior to the date of filing a brief, will not be entered because
   (a) ☐ They raise new issues that would require further consideration and/or search (see NOTE below);
   (b) ☐ They raise the issue of new matter (see NOTE below);
   (c) ☐ They are not deemed to place the application in better form for appeal by materially reducing or simplifying the issues for appeal; and/or
   (d) ☐ They present additional claims without canceling a corresponding number of finally rejected claims.

   NOTE: _____. (See 37 CFR 1.116 and 41.33(a)).
4. ☐ The amendments are not in compliance with 37 CFR 1.121. See attached Notice of Non-Compliant Amendment (PTOL-324).
5. ☐ Applicant's reply has overcome the following rejection(s): _____.
6. ☐ Newly proposed or amended claim(s) _____ would be allowable if submitted in a separate, timely filed amendment canceling the non-allowable claim(s).
7. ☐ For purposes of appeal, the proposed amendment(s): a) ☐ will not be entered, or b) ☐ will be entered and an explanation of how the new or amended claims would be rejected is provided below or appended.
   The status of the claim(s) is (or will be) as follows:
   Claim(s) allowed: _____.
   Claim(s) objected to: _____.
   Claim(s) rejected: _____.
   Claim(s) withdrawn from consideration: _____.

AFFIDAVIT OR OTHER EVIDENCE

8. ☐ The affidavit or other evidence filed after a final action, but before or on the date of filing a Notice of Appeal will not be entered because applicant failed to provide a showing of good and sufficient reasons why the affidavit or other evidence is necessary and was not earlier presented. See 37 CFR 1.116(e).
9. ☐ The affidavit or other evidence filed after the date of filing a Notice of Appeal, but prior to the date of filing a brief, will not be entered because the affidavit or other evidence failed to overcome all rejections under appeal and/or appellant fails to provide a showing a good and sufficient reasons why it is necessary and was not earlier presented. See 37 CFR 41.33(d)(1).
10. ☐ The affidavit or other evidence is entered. An explanation of the status of the claims after entry is below or attached.

REQUEST FOR RECONSIDERATION/OTHER

11. ☒ The request for reconsideration has been considered but does NOT place the application in condition for allowance because: See Continuation Sheet.
12. ☐ Note the attached Information *Disclosure Statement*(s). (PTO/SB/08) Paper No(s). _____
13. ☐ Other: _____.

/EVENS J. AUGUSTIN/
Primary Examiner, Art Unit 3621

Continuation of 11. does NOT place the application in condition for allowance because: Claims 31-51 is rejected under 35 U.S.C. 103(a) as being unpatentable over Hudetz et al. (U.S 5978773) ("Hudetz"), and Murakami et al. (U.S 6370563) ("Murakami"), and in further view of. Durst, Jr. et al. (US 6542933) ("Durst").

Advisory Action Before the Filing of an Appeal Brief	Application No. 10/411,638	Applicant(s) WRIGHT ET AL.	
	Examiner EVENS J. AUGUSTIN	Art Unit 3621	

--The MAILING DATE of this communication appears on the cover sheet with the correspondence address --

THE REPLY FILED 10 December 2008 FAILS TO PLACE THIS APPLICATION IN CONDITION FOR ALLOWANCE.

1. ☒ The reply was filed after a final rejection, but prior to or on the same day as filing a Notice of Appeal. To avoid abandonment of this application, applicant must timely file one of the following replies: (1) an amendment, affidavit, or other evidence, which places the application in condition for allowance; (2) a Notice of Appeal (with appeal fee) in compliance with 37 CFR 41.31; or (3) a Request for Continued Examination (RCE) in compliance with 37 CFR 1.114. The reply must be filed within one of the following time periods:
   a) ☒ The period for reply expires 3 months from the mailing date of the final rejection.
   b) ☐ The period for reply expires on: (1) the mailing date of this Advisory Action, or (2) the date set forth in the final rejection, whichever is later. In no event, however, will the statutory period for reply expire later than SIX MONTHS from the mailing date of the final rejection.

   Examiner Note: If box 1 is checked, check either box (a) or (b). ONLY CHECK BOX (b) WHEN THE FIRST REPLY WAS FILED WITHIN TWO MONTHS OF THE FINAL REJECTION. See MPEP 706.07(f).

Extensions of time may be obtained under 37 CFR 1.136(a). The date on which the petition under 37 CFR 1.136(a) and the appropriate extension fee have been filed is the date for purposes of determining the period of extension and the corresponding amount of the fee. The appropriate extension fee under 37 CFR 1.17(a) is calculated from: (1) the expiration date of the shortened statutory period for reply originally set in the final Office action; or (2) as set forth in (b) above, if checked. Any reply received by the Office later than three months after the mailing date of the final rejection, even if timely filed, may reduce any earned patent term adjustment. See 37 CFR 1.704(b).

NOTICE OF APPEAL

2. ☐ The Notice of Appeal was filed on _____. A brief in compliance with 37 CFR 41.37 must be filed within two months of the date of filing the Notice of Appeal (37 CFR 41.37(a)), or any extension thereof (37 CFR 41.37(e)), to avoid dismissal of the appeal. Since a Notice of Appeal has been filed, any reply must be filed within the time period set forth in 37 CFR 41.37(a).

AMENDMENTS

3. ☐ The proposed amendment(s) filed after a final rejection, but prior to the date of filing a brief, will not be entered because
   (a) ☐ They raise new issues that would require further consideration and/or search (see NOTE below);
   (b) ☐ They raise the issue of new matter (see NOTE below);
   (c) ☐ They are not deemed to place the application in better form for appeal by materially reducing or simplifying the issues for appeal; and/or
   (d) ☐ They present additional claims without canceling a corresponding number of finally rejected claims.

   NOTE: _____. (See 37 CFR 1.116 and 41.33(a)).
4. ☐ The amendments are not in compliance with 37 CFR 1.121. See attached Notice of Non-Compliant Amendment (PTOL-324).
5. ☐ Applicant's reply has overcome the following rejection(s): _____.
6. ☐ Newly proposed or amended claim(s) _____ would be allowable if submitted in a separate, timely filed amendment canceling the non-allowable claim(s).
7. ☐ For purposes of appeal, the proposed amendment(s): a) ☐ will not be entered, or b) ☐ will be entered and an explanation of how the new or amended claims would be rejected is provided below or appended.
   The status of the claim(s) is (or will be) as follows:
   Claim(s) allowed: _____.
   Claim(s) objected to: _____.
   Claim(s) rejected: _____.
   Claim(s) withdrawn from consideration: _____.

AFFIDAVIT OR OTHER EVIDENCE

8. ☐ The affidavit or other evidence filed after a final action, but before or on the date of filing a Notice of Appeal will not be entered because applicant failed to provide a showing of good and sufficient reasons why the affidavit or other evidence is necessary and was not earlier presented. See 37 CFR 1.116(e).
9. ☐ The affidavit or other evidence filed after the date of filing a Notice of Appeal, but prior to the date of filing a brief, will not be entered because the affidavit or other evidence failed to overcome all rejections under appeal and/or appellant fails to provide a showing a good and sufficient reasons why it is necessary and was not earlier presented. See 37 CFR 41.33(d)(1).
10. ☐ The affidavit or other evidence is entered. An explanation of the status of the claims after entry is below or attached.

REQUEST FOR RECONSIDERATION/OTHER

11. ☒ The request for reconsideration has been considered but does NOT place the application in condition for allowance because: See Continuation Sheet.
12. ☐ Note the attached Information *Disclosure Statement*(s). (PTO/SB/08) Paper No(s). _____
13. ☐ Other: _____.

/EVENS J. AUGUSTIN/
Primary Examiner, Art Unit 3621

Continuation of 11. does NOT place the application in condition for allowance because: Claims 31-51 is rejected under 35 U.S.C. 103(a) as being unpatentable over Hudetz et al. (U.S 5978773) ("Hudetz"), and Murakami et al. (U.S 6370563) ("Murakami"), and in further view of. Durst, Jr. et al. (US 6542933) ("Durst").

UNITED STATES PATENT AND TRADEMARK OFFICE

UNITED STATES DEPARTMENT OF COMMERCE
United States Patent and Trademark Office
Address: COMMISSIONER FOR PATENTS
P.O. Box 1450
Alexandria, Virginia 22313-1450
www.uspto.gov

APPLICATION NO.	FILING DATE	FIRST NAMED INVENTOR	ATTORNEY DOCKET NO.	CONFIRMATION NO.
10/411,642	04/11/2003	James Wright	2003P05451US	4488

7590 09/10/2008
Siemens Corporation
Intellectual Property Department
170 Wood Avenue South
Iselin, NJ 08830

EXAMINER
DASS, HARISH T

ART UNIT	PAPER NUMBER
3692	

MAIL DATE	DELIVERY MODE
09/10/2008	PAPER

Please find below and/or attached an Office communication concerning this application or proceeding.

The time period for reply, if any, is set in the attached communication.

UNITED STATES PATENT AND TRADEMARK OFFICE

Commissioner for Patents
United States Patent and Trademark Office
P.O. Box 1450
Alexandria, VA 22313-1450
www.uspto.gov

MAILED
FROM DIRECTORS OFFICE

SEP 09 2008

TECHNOLOGY CENTER 3600

Michael N. Haynes
Siemens Corporation
Intellectual Property Department
170 Wood Avenue South
Iselin NJ 08830

In re Application of: James Wright et al.	:	**DECISION ON PETITION**
Application No. 10/411,642	:	**UNDER 37 CFR 1.181**
Filed: April 11, 2003	:	
Attorney Docket No.: 2003P05451US (1009-094)	:	
For: Method, System and Apparatus for	:	
Providing Product Information	:	
Over the Internet	:	

This is in response to Applicants' petition under 37 CFR 1.181 filed February 27, 2008 requesting withdrawal of the finality of the Office action mailed January 25, 2008 as being premature.

The Petition is **DISMISSED as moot.**

Applicants allege that the final rejection mailed January 25, 2008 is premature because the Office action fails to properly reject any of the claims 2-20 and answer to all of Applicants' previously presented arguments.

Applicants have argued that the Office action dated January 25, 2008, should not have been made final, as claims 1-20 were grouped together and rejected as a group. Applicants cite MPEP 707.07(b) and assert that this type of rejections is not appropriate "unless the rejection is equally applicable to all the claims in the group."

A review of the records indicate that since the filing of the petition, applicants have filed a Request for Continuation of Examination (RCE). The filing of the RCE effectively removes the finality of the previous Office action.

Questions concerning this decision should be referred to SPE Kambiz Abdi at (571) 272-6702.

Wynn Coggins, Director
Patent Technology Center 3600
(571) 272-5350

R

SPE RESPONSE FOR CERTIFICATE OF CORRECTION

Paper No.: ____

DATE : 5/12/09

TO SPE OF : ART UNIT 3734

SUBJECT : Request for Certificate of Correction for Appl. No.: 10/411645 Patent No.: 7473271 B2

Please respond to this request for a certificate of correction within 7 days.

FOR IFW FILES:

Please review the requested changes/corrections as shown in the **COCIN** document(s) in the IFW application image. No new matter should be introduced, nor should the scope or meaning of the claims be changed.

Please complete the response (see below) and forward the completed response to scanning using document code **COCX**.

FOR PAPER FILES:

Please review the requested changes/corrections as shown in the attached certificate of correction. Please complete this form (see below) and forward it with the file to:

Certificates of Correction Branch (C of C)
Randolph Square 9D62-B
Palm Location 7580

Virginia Tolbert
Certificates of Correction Branch
703-756-1591

Thank You For Your Assistance

The request for issuing the above-identified correction(s) is hereby:
Note your decision on the appropriate box.

- [x] **Approved** — **All** changes apply.
- [ ] **Approved in Part** — Specify below which changes **do not** apply.
- [ ] **Denied** — State the reasons for denial below.

Comments: _____

TODD E. MANAHAN
SUPERVISORY PATENT EXAMINER
SPE

3734
Art Unit

PTOL-306 (REV. 7/03)

U.S. DEPARTMENT OF COMMERCE Patent and Trademark Office

SPE RESPONSE FOR CERTIFICATE OF CORRECTION

DATE : 3/11/10 **Paper No.:** ——

TO SPE OF : ART UNIT 3693

SUBJECT : Request for Certificate of Correction for Appl. No.: 10/411650 Patent No.: 7509286 B1

Please respond to this request for a certificate of correction within 7 days.

FOR IFW FILES:

Please review the requested changes/corrections as shown in the **COCIN** document(s) in the IFW application image. No new matter should be introduced, nor should the scope or meaning of the claims be changed.

Please complete the response (see below) and forward the completed response to scanning using document code **COCX**.

FOR PAPER FILES:

Please review the requested changes/corrections as shown in the attached certificate of correction. Please complete this form (see below) and forward it with the file to:

Certificates of Correction Branch (CofC)
Randolph Square – 9D10-A
Palm Location 7580

Virginia Tolbert
Certificates of Correction Branch
571-272-0460

Thank You For Your Assistance

The request for issuing the above-identified correction(s) is hereby:
Note your decision on the appropriate box.

- ☒ **Approved** — All changes apply.
- ☐ **Approved in Part** — Specify below which changes **do not** apply.
- ☐ **Denied** — State the reasons for denial below.

Comments:

The errors resulted from (i) typographical errors in the original specification (ii) errors in printing of the issued patent by the PTO.

This C of C corrects the errors without introducing any new matter and therefore approved.

/James Kramer/ 4/8/2010

UNITED STATES PATENT AND TRADEMARK OFFICE

Commissioner for Patents
United States Patent and Trademark Office
P.O. Box 1450
Alexandria, VA 22313-1450
www.uspto.gov

MAIL

DEC - 9 2004

DIRECTOR OFFICE
TECHNOLOGY CENTER 2100

TOWNSEND AND TOWNSEND AND CREW LLP
TWO EMBARCADERO CENTER
EIGHT FLOOR
SAN FRANCISCO, CALIFORNIA 94111-3834

In re Application of: Kuroda, et al.
Application No. 10/411,653
Filed: April 10, 2003
For: IN-CONTEXT LAUNCH MANAGEMENT METHOD, SYSTEM, AND COMPUTER-READABLE MEDIUM

DECISION ON PETITION FOR ACCELERATED EXAMINATION UNDER M.P.E.P.§708.02(VIII)

This is a decision on the petition filed September 21, 2004 under 37 C.F.R. 102(d) and M.P.E.P. § 708.02(VIII): Accelerated Examination, to make the above-identified application special.

The Petition is **GRANTED**.

M.P.E.P. § 708.02, Section VIII which sets out the prerequisites for a grantable petition for Accelerated Examination under 37 C.F.R. § 102(d) states in relevant part:

A new application (one which has not received any examination by the examiner) may be granted special status provided that applicant (and this term includes applicant's attorney or agent) complies with each of the following items:

(a) Submits a petition to make special accompanied by the fee set forth in **37 CFR 1.17(h)**;

(b) Presents all claims directed to a single invention, or if the Office determines that all the claims presented are not obviously directed to a single invention, will make an election without traverse as a prerequisite to the grant of special status;

(c) Submits a statement(s) that a pre-examination search was made, listing the field of search by class and subclass, publication, Chemical Abstracts, foreign patents, etc. The pre-examination search must be directed to the invention as claimed in the application for which special status is requested. A search made by a foreign patent office satisfies this requirement;

(d) Submits one copy each of the references deemed most closely related to the subject matter encompassed by the claims if said references are not already of record; and

(e) Submits a detailed discussion of the references, which discussion points out, with the particularity required by 37 CFR 1.111 (b) and (c), how the claimed subject matter is patentable over the references.

Petition to Make Special **GRANTED** since all of the requirements for special status under MPEP § 708.02(VIII) have been met.

The application file is being forwarded to the Examiner for accelerated examination in accordance with the procedures set forth in M.P.E.P. §708.02, Section VIII. If the application is subsequently allowed, it will be given priority for printing. See M.P.E.P. §1309.

12/3/04

Brian L. Johnson
Special Program Examiner
Technology Center 2100
Computer Architecture, Software and Information Security
571-272-3595

MBS

SPE RESPONSE FOR CERTIFICATE OF CORRECTION

Paper No.: _____

DATE : 07/20/09

TO SPE OF : ART UNIT 1651

SUBJECT : Request for Certificate of Correction for Appl. No.: 10411655 Patent No.: 7498171 B2

Please respond to this request for a certificate of correction within 7 days.

FOR IFW FILES:

Please review the requested changes/corrections as shown in the **COCIN** document(s) in the IFW application image. No new matter should be introduced, nor should the scope or meaning of the claims be changed.

Please complete the response (see below) and forward the completed response to scanning using document code **COCX**.

FOR PAPER FILES:

Please review the requested changes/corrections as shown in the attached certificate of correction. Please complete this form (see below) and forward it with the file to:

Certificates of Correction Branch (C of C)
Randolph Square 9D40-D
Palm Location 7580

You can fax the Directors/SPE response to 571-270-9990

Lamonte Newsome
Certificates of Correction Branch
703-756-1574

Thank You For Your Assistance

The request for issuing the above-identified correction(s) is hereby:
Note your decision on the appropriate box.

■ **Approved**	**All** changes apply.
❑ **Approved in Part**	Specify below which changes **do not** apply.
❑ **Denied**	State the reasons for denial below.

Comments: _____

Michael D. Wityshyn 1651

UNITED STATES PATENT AND TRADEMARK OFFICE

Commissioner for Patents
United States Patent and Trademark Office
P.O. Box 1450
Alexandria, VA 22313-1450
www.uspto.gov

FEB 11 2008

FERRELLS, PLLC
4400 FAIR LAKES COUNT, SUITE 201
FAIRFAX, VIRGINIA 22033-3899

In re Patent No.7,145,026 C. Fleisher
Issue Date: December 5, 2006
Appl No.: 10/411,664
Filed: April 11, 2003
For: Correction of Inventorship

DECISION GRANTING PETITION
37 CFR 1.324

This is a decision on the petition filed July, 10, 2007 , to correct inventorship under 37 CFR 1.324.

The petition is **GRANTED**.

The patented file is being forwarded to Certificate of Corrections Branch for issuance of a certificate naming only the actual inventor or inventors.

Jean F Vollano

Jean F. Vollano
Quality Assurance Specialist
Technology Center 1600

UNITED STATES PATENT AND TRADEMARK OFFICE

FEB 1 1 2008

Commissioner for Patents
United States Patent and Trademark Office
P.O. Box 1450
Alexandria, VA 22313-1450
www.uspto.gov

DATE: February 11, 2008
TO: Certificates of Correction Branch
FROM: Jean F. Vollano
Technology Center 1600

SUBJECT: REQUEST FOR CERTIFICATE OF CORRECTION

Please issue a Certificate of Correction in U. S. Letters Patent No. 7,145,026 as specified on the attached Certificate.

Jean F. Vollano

Jean F. Vollano
Technology Center 1600

FEB 1 1 2008

UNITED STATES PATENT AND TRADEMARK OFFICE

CERTIFICATE

Patent No. 7,145,026
Patented: December 5, 2006

On petition requesting issuance of a certificate for correction of inventorship pursuant to 35 U.S.C. 256, it has been found that the above identified patent, through error and without deceptive intent, improperly sets forth the inventorship. Accordingly, it is hereby certified that the correct inventorship of this patent is:

Christian Fleisher

Alfred M. Center

Andras Nady

Christian Wood

Eric Johnson

Jean F Vollano

Jean F. Vollano
Technology Center 1600

UNITED STATES PATENT AND TRADEMARK OFFICE

COMMISSIONER FOR PATENTS
UNITED STATES PATENT AND TRADEMARK OFFICE
P.O. BOX 1450
ALEXANDRIA, VA 22313-1450
www.uspto.gov

Paper No.

Dara L. Onofrio, Esq,
c/o ONOFRIO LAW
1133 Broadway
Suite 1600
New York, NY 10010

COPY MAILED

OCT 2 9 2003

OFFICE OF PETITIONS

In re Application of :
Jeanlynn Mets :
Application No. 10/411,677 :
Filed: April 11, 2003 : ON PETITION
Attorney Docket No. :
IP 6331-US :

This is a decision on the petition under 37 CFR § 1.10(d), filed July 28, 2003, requesting that the above-identified application be accorded a filing date of April 10, 2003, rather than the presently accorded filing date of April 11, 2003.

Petitioner alleges that the application was deposited in Express Mail service on April 11, 2003.

Background

Petitioner requests the filing date correction on the basis that the application was allegedly deposited in Express Mail service on April 10, 2003. The Petition is accompanied by a copy of Express Mailing Receipt No. EV242722279US, which indicates the "Date In" as the presently accorded filing date of April 11, 2003; a copy of the Application Transmittal Page with Express Mail No. EV242722279US and a Certificate of Mailing dated April 10, 2003; a copy of the Track and Confirm service of the United States Postal Service ("USPS") indicating that Express Mail No. EV242722279US was accepted for delivery on the presently accorded filing date of April 11, 2003; a copy of an Express Mail Log that includes a "Date", "Express Mail #", "Client" and "Matter" entries. The Express Mail Log for Express Mail No. EV242722279US corresponds to the date of April 10, 2003. A second entry on the Express Mail Log for Express Mail No. EV242722282US also contains a corresponding date entry of April 10, 2003. Petitioner has included with the instant petition, a copy of the Track and Confirm service of the USPS for the second Express Mail No. EV242722282US, which indicates that the second Express Mail No. EV242722282US, was accepted for delivery on

April 10, 2003. Petitioner also provides the Declaration of Dara L. Onofrio wherein it is asserted that the declarant deposited the application prior to the 5:00 pm pick-up for that day, along with the second Express Mail Log entry.

Applicable Law

Paragraph (d) of 37 CFR 1.10 states that:

> Any person filing correspondence under this section that was received by the Office and delivered by the "Express Mail Post Office to Addressee" service of the USPS, who can show that the "date-in" on the "Express Mail" mailing label or other official notation entered by the USPS was incorrectly entered or omitted by the USPS, may petition the Commissioner to accord the correspondence a filing date as of the date the correspondence is shown to have been deposited with the USPS, provided that:
>
> (1) The petition is filed promptly after the person becomes aware that the Office has accorded, or will accord, a filing date based upon an incorrect entry by the USPS;
>
> (2) The number of the "Express Mail" mailing label was placed on the paper(s) or fee(s) that constitute the correspondence prior to the original mailing by "Express Mail;" and
>
> (3) The petition includes a showing which establishes, to the satisfaction of the Commissioner, that the requested filing date was the date the correspondence was deposited in the "Express Mail Post Office to Addressee" service prior to the last scheduled pickup for that day. Any showing pursuant to this paragraph must be corroborated by evidence from the USPS or that came into being after deposit within one business day of the deposit of the correspondence in the "Express Mail Post Office to Addressee" service of the USPS.

Analysis

The instant Petition lacks the showing required in item (3). The showing under 37 CFR 1.110(d) must be corroborated by (1) evidence from the USPS, or (2) evidence that came into being

after deposit and within one (1) business day of the deposit of the correspondence as Express Mail. Evidence from the USPS may be the Express Mail Corporate Account Mailing Statement. Evidence that came into being within one (1) day after the deposit of the correspondence as Express Mail may be in the form of a log book which contains information such as the Express Mail number; the application number, attorney docket number or other such file identification number; the place, date and time of deposit; the time of the last scheduled pick-up for that date and place of deposit; the depositor's initials or signature; and the date and time of entry in the log. Any statement submitted in support of such a showing must be verified if made by a person other than an employee of the USPS or a practitioner as defined in 37 CFR 10.1(r).

Petitioner has not submitted a showing with corroborating evidence under 37 CFR 1.10(d), that the correspondence was deposited as Express Mail prior to the last scheduled pickup on the requested date. As noted above, evidence must either be from the USPS, or have come into being after deposit and within one (1) business day of the deposit of the correspondence as Express Mail.

The Express Mail mailing log entry does not identify the place and time of deposit of the package in Express Mail service or the last scheduled pick-up for that date, nor does it identify the depositor's initials or signature, or the date and time of entry in the log. Accordingly, it is unclear whether the entry in the log came into being after deposit and within one business day of the deposit of the correspondence in the "Express Mail Post Office to Addressee" service of the USPS.

Any request for reconsideration of this decision should be filed within TWO (2) MONTHS of the mailing date of the decision to be considered timely. See 37 CFR 1.181(f). This time period may not be extended under 37 CFR 1.136.

Further correspondence with respect to this matter should be addressed as follows:

By mail: Commissioner for Patents
PO Box 1450
Alexandria, VA 22313-1450

By facsimile: (703) 308-6916
Attn: Office of Petitions

By hand: Office of Petitions
2201 South Clark Place
Crystal Plaza 4, Suite 3C23
Arlington, VA 22202

Telephone inquiries concerning this matter should be directed to the undersigned at (703) 305-0014.

Derek L. Woods
Petitions Attorney
Office of Petitions

UNITED STATES PATENT AND TRADEMARK OFFICE

COMMISSIONER FOR PATENTS
UNITED STATES PATENT AND TRADEMARK OFFICE
P.O. BOX 1450
ALEXANDRIA, VA 22313-1450
www.uspto.gov

~~1744~~
1774

Paper No.

Dara L. Onofrio, Esq,
c/o ONOFRIO LAW
1133 Broadway
Suite 1600
New York, NY 10010

COPY MAILED
FEB 05 2004
OFFICE OF PETITIONS

In re Application of :
Jeanlynn Mets :
Application No. 10/411,677 :
Filed: April 11, 2003 : ON PETITION
Attorney Docket No. :
IP 6331-US :

This is a decision on the Request for Reconsideration of Petition under 37 CFR § 1.10(d), filed December 29, 2003, requesting that the above-identified application be accorded a filing date of April 10, 2003, rather than the presently accorded filing date of April 11, 2003.

Petitioner alleges that the application was deposited in Express Mail service on April 11, 2003.

Background

Petitioner under 37 CFR § 1.10(d), filed December 29, 2003, was dismissed by this Office in a Decision mailed on October 29, 2003, for failing to meet the requirements of a grantable petition under 37 CFR § 1.10(d). Specifically, the Decision dismissing the petition stated that:

> Petitioner has not submitted a showing with corroborating evidence under 37 CFR 1.10(d), that the correspondence was deposited as Express Mail prior to the last scheduled pickup on the requested date. As noted above, evidence must either be from the USPS, or have come into being after deposit and within one (1) business day of the deposit of the correspondence as Express Mail.
>
> The Express Mail mailing log entry does not identify the place and time of deposit of the package in Express Mail service or the last scheduled pick-up for that date, nor does it identify the depositor's

> initials or signature, or the date and time of entry in the log. Accordingly, it is unclear whether the entry in the log came into being after deposit and within one business day of the deposit of the correspondence in the "Express Mail Post Office to Addressee" service of the USPS.

Applicant files the instant Request for Reconsideration of Petition and avers that the log entry, coupled with the verified statement of the attorney who filed the application evidence the error on the part of the USPS and demonstrate that the application was deposited on April 10, 2003.

A review of the original petition, filed July 25, 2003, and the instant Request for Reconsideration re-affirm that Applicant has failed to establish that the correspondence was deposited as Express Mail prior to the last scheduled pickup on the requested date.

Applicable Law

Paragraph (d) of 37 CFR 1.10 states that:

> Any person filing correspondence under this section that was received by the Office and delivered by the "Express Mail Post Office to Addressee" service of the USPS, who can show that the "date-in" on the "Express Mail" mailing label or other official notation entered by the USPS was incorrectly entered or omitted by the USPS, may petition the Commissioner to accord the correspondence a filing date as of the date the correspondence is shown to have been deposited with the USPS, provided that:
>
> (1) The petition is filed promptly after the person becomes aware that the Office has accorded, or will accord, a filing date based upon an incorrect entry by the USPS;
>
> (2) The number of the "Express Mail" mailing label was placed on the paper(s) or fee(s) that constitute the correspondence prior to the original mailing by "Express Mail;" and
>
> (3) The petition includes a showing which establishes, to the satisfaction of the Commissioner, that the requested filing date was the

date the correspondence was deposited in the "Express Mail Post Office to Addressee" service prior to the last scheduled pickup for that day. Any showing pursuant to this paragraph must be corroborated by evidence from the USPS or that came into being after deposit within one business day of the deposit of the correspondence in the "Express Mail Post Office to Addressee" service of the USPS.

Analysis

The instant Petition lacks the showing required in item (3). The showing under 37 CFR 1.110(d) must be corroborated by (1) evidence from the USPS, or (2) evidence that came into being after deposit and within one (1) business day of the deposit of the correspondence as Express Mail.

In the Declaration of Dara L. Onofrio, filed with the July 28, 2003 petition, Ms. Onofrio declares that "[s]hortly after recording this entry into the Log, I personally dropped the Express Mail Package containing the '677 application in the Express Mail Box on the corner of 25th and Broadway in New York City ("25th Street Mailbox")." *July 25, 2003 Declaration of Dana L. Onofrio* at para. 5.

The instant Request for Reconsideration of Petition reiterates paragraph 5 of the July 25, 2003 Onofrio Declaration in paragraph 5 of the Request for Reconsideration of Petition. There it is stated that "[f]urther in paragraph 5 of the Onofrio Declaration indicates that the entry for the '677 deposit was made in the firm's express mail log and then the package was deposited by Ms. Onofrio." The petition further argues that "[t]herefore it is clear from Ms. Onofrio's verified Declaration that the express mail log existed prior to the day of deposit… after the day of deposit…, and after the day of deposit." *Request for Reconsideration* at para 5.

What is clear from Ms. Onofrio's verified Declaration is that the evidence relied upon to demonstrate the deposit of the express mailing came into being before deposit of the correspondence as Express Mail. The showing required must be provided from evidence that came into being *after deposit* and within one (1) business day of the deposit of the correspondence as Express Mail. (Emphasis supplied).

That the express mail log existed prior to the day of deposit is inapposite. Evidence of deposit is not the express mail log itself, it is the entry on the express mail log. The entry on the express mail log must have come into being after deposit. It is clear that the entry purporting to evince the deposit of the express mailing came into being before deposit of the correspondence as Express Mail.

In conclusion, the above-identified application is not entitled to a filing date of April 10, 2003 pursuant to 37 CFR 1.10(d), due to the discrepancy between the "Date-In" on the Express Mail label and the date on the Express Mail Log, and in view of the other submitted evidence.

For the above stated reasons, the request that the above-identified application be accorded a filing date of April 10, 2003is dismissed and the filing date remains April 11, 2003.

Any request for reconsideration of this decision should be filed within TWO (2) MONTHS of the mailing date of the decision to be considered timely. See 37 CFR 1.181(f). This time period may not be extended under 37 CFR 1.136.

After a decision on the petition for reconsideration, no further reconsideration or review of the matter will be undertaken by the Commissioner. Therefore, it is extremely important that petitioner supply **any** and **all** relevant information and documentation with his request for reconsideration. The Commissioner's decision will be based solely on the administrative record in existence.

Further correspondence with respect to this matter should be addressed as follows:

By mail: Commissioner for Patents
PO Box 1450
Alexandria, VA 22313-1450

By FAX: (703) 872-9306
Attn: Office of Petitions

By hand: 2201 South Clark Place
Customer Window
Crystal Plaza Two, Lobby Room 1B03
Arlington, VA 22202

Telephone inquiries concerning this matter should be directed to the undersigned at (703) 305-0014.

Derek L. Woods
Petitions Attorney
Office of Petitions

UNITED STATES PATENT AND TRADEMARK OFFICE

COMMISSIONER FOR PATENTS
UNITED STATES PATENT AND TRADEMARK OFFICE
P.O. BOX 1450
ALEXANDRIA, VA 22313-1450
www.uspto.gov

Paper No.

Dara L. Onofrio, Esq,
c/o ONOFRIO LAW
1133 Broadway
Suite 1600
New York, NY 10010

COPY MAILED
APR 26 2004
OFFICE OF PETITIONS

In re Application of :
Jeanlynn Mets :
Application No. 10/411,677 :
Filed: April 11, 2003 : ON PETITION
Attorney Docket No. IP 6331-US :

This is a decision on the Final Request for Reconsideration of Petition under 37 CFR § 1.10(d), filed April 5, 2004, requesting that the above-identified application be accorded a filing date of April 10, 2003, rather than the presently accorded filing date of April 11, 2003.

Petitioner alleges that the application was deposited in Express Mail service on April 11, 2003. Petitioner has filed the appropriate documentary and corroborating evidence demonstrating that April 10, 2003 was the date the correspondence was deposited Express Mail Post Office to Addressee.

In view of the above, the petition is **granted**. No fee is necessary.

This application file will be forwarded to the Office of Initial Patent Examination for correction of the filing date to April 10, 2003.

Telephone inquiries concerning this matter should be directed to the undersigned at (703) 305-0014.

Derek L. Woods
Petitions Attorney
Office of Petitions

SPE RESPONSE FOR CERTIFICATE OF CORRECTION

Paper No.: _____

DATE : 4/29/05

TO SPE OF : ART UNIT 2826

SUBJECT : Request for Certificate of Correction on Patent No.: 6867481 B2

A response is requested with respect to the accompanying request for a certificate of correction.

Please complete this form and return with file, within 7 days to:
Certificates of Correction Branch - PK 3-915
Palm location **7580** - Tel. No. 305-8309

With respect to the change(s) requested, correcting Office and/or Applicant's errors, should the patent read as shown in the certificate of correction? No new matter should be introduced, nor should the scope or meaning of the claims be changed.

DE
Certificates of Correction Branch

Thank You For Your Assistance

The request for issuing the above-identified correction(s) is hereby:
Note your decision on the appropriate box.

- ☑ Approved — All changes apply.
- ☑ Approved in Part — Specify below which changes do not apply.
- ☐ Denied — State the reasons for denial below.

Comments:

OK to Ent

NATHAN J. FLYNN
SUPERVISORY PATENT EXAMINER
TECHNOLOGY CENTER 2800

Art Unit

PTOL-306 (REV. 7/03)

U.S. DEPARTMENT OF COMMERCE Patent and Trademark Office

PTO/SB/ 44 (08-00)
Approved for use through 09/30/2000. OMB 0651-0033
U.S. Patent and Trademark Office; U.S. DEPARTMENT OF COMMERCE
Under the Paperwork Reduction Act of 1995, no persons are required to respond to a collection of information unless it displayers a valid OMB control number

(Also Form PTO-1050)

NATHAN J. FLYNN
SUPERVISORY PATENT EXAMINER
TECHNOLOGY CENTER 2800

UNITED STATES PATENT AND TRADEMARK OFFICE
CERTIFICATE OF CORRECTION

PATENT NO. : **6,867,481 B2**

DATED : **March 15, 2005**

INVENTOR(S) : **Joshi et al.**

OK

It is certified that error appears in the above-identified patent and that said Letters Patent is hereby corrected as shown below:

In claim 1, column 9, line 28, kindly delete "surfaces", and insert --surface--

In claim 1, column 10, line 2, kindly delete "structure" and insert --structure,--

After claim 7, column 10, beginning at line 44, insert claims 8-11--

8. The semiconductor die package of claim 1 wherein the molding material covers the first surface of the semiconductor die but does not cover the second surface of the semiconductor die.

9. The semiconductor die package of claim 3 wherein the molding material covers the first surface of the semiconductor die but does not cover the second surface of the semiconductor die.

10. The semiconductor die package of claim 1 wherein the leadframe structure includes a dummy lead structure including dummy leads, wherein the dummy lead structure is separated from the die attach region.

11. The semiconductor die package of claim 3 wherein the leadframe structure includes a dummy lead structure including dummy leads, wherein the dummy lead structure is separated from the die attach region.--

MAILING ADDRESS OF SENDER:
Patrick R. Jewik, Reg. No. 40,456
Townsend and Townsend and Crew, LLP
Two Embarcadero Center, 8th Floor
San Francisco, CA 94111-3834
60457684 v1

PATENT NO. 6,867,481 B2

Burden Hour Statement: This form is estimated to take 1.0 hour to complete. Time will vary depending upon the needs of the individual case. Any comments on the amount of time you are required to complete this form should be sent to the Chief Information Officer, U.S. Patent and Trademark Office, Washington, DC 20231. DO NOT SEND FEES OR COMPLETED FORMS TO THIS ADDRESS. SEND TO: Assistant Commissioner for Patents, Washington, DC 20231.

UNITED STATES PATENT AND TRADEMARK OFFICE

COMMISSIONER FOR PATENTS
UNITED STATES PATENT AND TRADEMARK OFFICE
P.O. BOX 1450
ALEXANDRIA, VA 22313-1450
www.uspto.gov

Paper No. 6

COPY MAILED

DEC 2 4 2003

OFFICE OF PETITIONS

BECTON, DICKINSON AND COMPANY
1 BECTON DRIVE
FRANKLIN LAKES, NJ 07417-1880

In re Application of:	:	
Demetrio Sanchez-Martinez	:	DECISION REFUSING
Application No. 10/411,693	:	STATUS
Filed: April 11, 2003	:	UNDER 37 CFR 1.47(a)
Title of Invention:	:	
USE OF THE MULTIPIN PLATFORM AS	:	
ANCHOR DEVOCE	:	

This is in response to a petition under 37 CFR 1.47, filed October 2, 2003, to allow a person to whom an inventor has assigned or agreed in writing to assign the invention, or who otherwise shows sufficient proprietary interest in the matter justifying such action, to make application on behalf of and as agent for all inventors. The petition is properly treated under 37 CFR 1.47(b).

The petition is **dismissed**.

Rule 47 applicant is given TWO (2) MONTHS from the mailing date of this decision to reply, correcting the below-noted deficiencies. Any reply should be entitled "Request for Reconsideration of Petition Under 37 CFR 1.47(a)"; should only address the deficiencies noted below, except that the reply may include an oath or declaration executed by the non-signing inventor, AND BE ADDRESSED TO petitions Attorney Derek L. Woods. Failure to respond will result in abandonment of the application. Any extensions of time will be governed by 37 CFR 1.136(a).

The above-identified application was filed on April 11, 2003, without, an oath or declaration. The Office mailed a Notice to File Missing Parts of Nonprovisional Application (hereinafter "Notice"), on June 16, 2003, requiring *inter alia*, a properly signed oath or declaration.

In response to the Notice, Applicant files the instant petition wherein Applicant avers that, after diligent effort, the nonsigning inventor, Demetrio Sanchez-Martinez, cannot be found. No documentary evidence supporting this assertion has been

filed. Also, a review of the application file reveals that no oath or declaration has been filed.

Applicable Law

A grantable petition under 37 CFR 1.47(b) requires: (1) proof that the non-signing inventor cannot be reached or refuses to sign the oath or declaration after having been presented with the application papers (specification, claims and drawings); (2) an acceptable oath or declaration in compliance with 35 U.S.C. §§ 115 and 116; (3) the petition fee; (4) a statement of the last known address of the non-signing inventor(s); (5) proof of proprietary interest; and (6) proof of irreparable harm. Applicant lacks items (1), (2) and (5) as set forth above.

Petitioner is advised that 37 CFR 1.47 provides for two separate and distinct circumstances: one where the inventor refuses to join the application after having been presented with the application for signature, and the other where an inventor cannot be found or reached after diligent effort.

Analysis

As to item (1), if an inventor is unavailable (cannot be reached), while it is not required that the application be mailed, Applicant must establish the exercise of diligent effort in trying to find or reach the nonsigning inventor. A statement of facts should be submitted that fully describes the exact facts that are relied upon to establish that a diligent effort was made to locate the inventor. The statement of facts must be from a person with first hand knowledge of the events relied upon to establish that the inventor cannot be found or reached after diligent effort. At the very least, an Internet search, or a search of telephone directories should be undertaken of the regions where it is suspected the non-signing inventor may reside. *Copies of the results of such searches must be presented and referred to in any renewed petition.* (Emphasis supplied). It is important that the forthcoming communication contain statements of fact as opposed to conclusions. *See*, MPEP § 409.03(d).

As to item (2), the Office notes that pursuant to Section 409.03(b)(A) of the Manuel for Patent Examining Procedure:

> Where a corporation is the 37 CFR 1.47(b) applicant, an officer (President, Vice-President, Secretary, Treasurer or Chief Executive Officer) thereof should normally sign the necessary oath or declaration. A corporation may authorize any person, including an attorney or agent registered to practice before the Patent and Trademark Office, to sign the application oath or declaration on its behalf. Where an oath or declaration is signed by a registered attorney or agent on behalf of a corporation, either proof of the attorney's or agent's authority in the form of a statement signed by an appropriate corporate officer must be submitted, or the attorney or agent may simply state that he or she is authorized to sign on behalf of the corporation. Where the oath or declaration is being signed on behalf of an assignee, see MPEP Section 324. An inventor may not authorize another individual to act as his or her agent to sign the application oath or declaration on his or her behalf. *Staeger v. Commissioner*, 189 USPQ 272 (D.D.C. 1976), *In re Striker*, 182 USPQ 507 (Comm'r Pat. 1973). Where an application is executed by one other than the inventor, the declaration required by 37 CFR 1.63 must state the full name, residence, post office address, and citizenship of the nonsigning *inventor*. (Emphasis supplied). Also, the title or position of the person signing must be stated if signing on behalf of a corporation under 37 CFR 1.47(b).

Applicant has not presented an oath or declaration for the patent application in compliance with 37 CFR 1.63 and 37 CFR 1.64. A properly executed oath or declaration is required.

As to item (5), applicant failed to show or provide proof that Becton, Dickinson and Company has sufficient proprietary interest in the subject matter to justify the filing of the application (see MPEP 409.03(f)). Acceptable proof would include a copy of the employment agreement between the non-signing inventor and the Rule 47(b) applicant (company), a copy of an assignment agreement showing that the invention disclosed in the application is assigned to the Rule 47(b) applicant, or a legal memorandum signed by an attorney familiar with the law of the jurisdiction stating that a court of competent jurisdiction

would, by the weight of authority in that jurisdiction, award the title of the invention to the Rule 47(b) applicant.

Further correspondence with respect to this matter should be addressed as follows:

By mail: Commissioner for Patents
PO Box 1450
Alexandria, VA 22313-1450

By FAX: (703) 872-9306
Attn: Office of Petitions

By hand: 2201 South Clark Place
Customer Window
Crystal Plaza Two, Lobby Room 1B03
Arlington, VA 22202

Telephone inquiries concerning this decision should be directed to the undersigned at (703) 305-0014.

Derek L. Woods
Petitions Attorney
Office of Petitions

UNITED STATES PATENT AND TRADEMARK OFFICE

COMMISSIONER FOR PATENTS
UNITED STATES PATENT AND TRADEMARK OFFICE
P.O. BOX 1450
ALEXANDRIA, VA 22313-1450
www.uspto.gov

Paper No. 7

COPY MAILED

JAN 30 2004

OFFICE OF PETITIONS

BECTON, DICKINSON AND COMPANY
1 BECTON DRIVE
FRANKLIN LAKES, NJ 07417-1880

In re Application of:	:	CORRECTED
Demetrio Sanchez-Martinez	:	DECISION REFUSING
Application No. 10/411,693	:	STATUS
Filed: April 11, 2003	:	UNDER 37 CFR 1.47(a)
Title of Invention:	:	
USE OF THE MULTIPIN PLATFORM AS	:	
ANCHOR DEVOCE	:	

This is in response to a petition under 37 CFR 1.47, filed October 2, 2003, to allow a person to whom an inventor has assigned or agreed in writing to assign the invention, or who otherwise shows sufficient proprietary interest in the matter justifying such action, to make application on behalf of and as agent for all inventors. The petition is properly treated under 37 CFR 1.47(b).

The petition is **dismissed**.

Rule 47 applicant is given TWO (2) MONTHS from the mailing date of this decision to reply, correcting the below-noted deficiencies. Any reply should be entitled "Request for Reconsideration of Petition Under 37 CFR 1.47(a)"; should only address the deficiencies noted below, except that the reply may include an oath or declaration executed by the non-signing inventor, AND BE ADDRESSED TO petitions Attorney Derek L. Woods. Failure to respond will result in abandonment of the application. Any extensions of time will be governed by 37 CFR 1.136(a).

The above-identified application was filed on April 11, 2003, without, an oath or declaration. The Office mailed a Notice to File Missing Parts of Nonprovisional Application (hereinafter "Notice"), on June 16, 2003, requiring *inter alia*, a properly signed oath or declaration.

In response to the Notice, Applicant files the instant petition wherein Applicant avers that, after diligent effort, the nonsigning inventor, Demetrio Sanchez-Martinez, cannot be found. In support of this assertion Applicant provides that the

original letters and disclosures sent to [the nonsigning inventor] was returned by the USPS as Undeliverable As Addressed Unable To Forward. Applicant then requested that Human Resources search their files for another address for the nonsigning inventor, and forwarded the application documents to a second address for the nonsigning inventor. *Petition* at p.2.

Applicable Law

A grantable petition under 37 CFR 1.47(b) requires: (1) proof that the non-signing inventor cannot be reached or refuses to sign the oath or declaration after having been presented with the application papers (specification, claims and drawings); (2) an acceptable oath or declaration in compliance with 35 U.S.C. §§ 115 and 116; (3) the petition fee; (4) a statement of the last known address of the non-signing inventor(s); (5) proof of proprietary interest; and (6) proof of irreparable harm. Applicant lacks item (1) as set forth above.

Petitioner is advised that 37 CFR 1.47 provides for two separate and distinct circumstances: one where the inventor refuses to join the application after having been presented with the application for signature, and the other where an inventor cannot be found or reached after diligent effort.

Analysis

As to item (1), if an inventor is unavailable (cannot be reached), while it is not required that the application be mailed, Applicant must establish the exercise of diligent effort in trying to find or reach the nonsigning inventor. A statement of facts should be submitted that fully describes the exact facts that are relied upon to establish that a diligent effort was made to locate the inventor. The statement of facts must be from a person with first hand knowledge of the events relied upon to establish that the inventor cannot be found or reached after diligent effort. At the very least, an Internet search, or a search of telephone directories should be undertaken of the regions where it is suspected the non-signing inventor may reside. *Copies of the results of such searches must be presented and referred to in any renewed petition.* (Emphasis supplied). It is important that the forthcoming communication contain statements of fact as opposed to conclusions. *See*, MPEP § 409.03(d).

Further correspondence with respect to this matter should be addressed as follows:

By mail: Commissioner for Patents
PO Box 1450
Alexandria, VA 22313-1450

By FAX: (703) 872-9306
Attn: Office of Petitions

By hand: 2201 South Clark Place
Customer Window
Crystal Plaza Two, Lobby Room 1B03
Arlington, VA 22202

Telephone inquiries concerning this decision should be directed to the undersigned at (703) 305-0014.

Derek L. Woods
Petitions Attorney
Office of Petitions

UNITED STATES PATENT AND TRADEMARK OFFICE

COMMISSIONER FOR PATENTS
UNITED STATES PATENT AND TRADEMARK OFFICE
P.O. BOX 1450
ALEXANDRIA, VA 22313-1450
www.uspto.go

Paper No. 9

COPY MAILED

MAR 17 2004

OFFICE OF PETITIONS

BECTON, DICKINSON AND COMPANY
1 BECTON DRIVE
FRANKLIN LAKES, NJ 07417-1880

In re Application of:	:	
Demetrio Sanchez-Martinez	:	DECISION GRANTING
Application No. 10/411,693	:	STATUS
Filed: April 11, 2003	:	UNDER 37 CFR 1.47(b)
Title of Invention:	:	
USE OF THE MULTIPIN PLATFORM AS	:	
ANCHOR DEVOCE	:	

This is in response to a Request for Reconsideration of Petition under 37 CFR 1.47(a), filed March 1, 2004, which is properly treated under 37 CFR 1.47(b), to allow a person to whom an inventor has assigned or agreed in writing to assign the invention, or who otherwise shows sufficient proprietary interest in the matter justifying such action, to make application on behalf of and as agent for all inventors.

The petition is **granted**.

The above-identified application and papers have been reviewed and found in compliance with 37 CFR 1.47(b). This application is hereby accorded Rule 1.47(b) status.

Petitioner has shown that the non-signing inventor, Demetrio Sanchez-Martinez, refuses to join in the application.

As provided in Rule 1.47(b), this Office will forward notice of this application's filing to the non-signing inventor at the address given in the Petition. Notice of the filing of this application will also be published in the Official Gazette.

The application file is being returned to the Office of Initial Patent Examination for continued processing.

Telephone inquiries related to this decision may be directed to the undersigned at (703) 305-0014.

Derek L. Woods
Petitions Attorney
Office of Petitions

UNITED STATES PATENT AND TRADEMARK OFFICE

COMMISSIONER FOR PATENTS
UNITED STATES PATENT AND TRADEMARK OFFICE
P.O. BOX 1450
ALEXANDRIA, VA 22313-1450
www.uspto.go

Mr. Demetrio Sanchez-Martinez
7524 Charmant Drive #522
San Diego, CA 92122

In re Application of:
Demetrio Sanchez-Martinez
Application No. 10/411,693
Filed: April 11, 2003
Title of Invention:
USE OF THE MULTIPIN PLATFORM AS ANCHOR DEVOCE

LETTER

COPY MAILED
MAR 17 2004
OFFICE OF PETITIONS

Dear Mr. Sanchez-Martinez:

You are named as the inventor in the above-identified United States patent application filed under the provisions of 35 U.S.C. 116 (United States Code) and 37 CFR 1.47(b), Rules of Practice in Patent Cases. Should a patent be granted on the application you will be designated therein as a joint inventor.

As the named inventor you are entitled to inspect any paper in the file wrapper of the application, order copies of all or any part thereof (at a prepaid cost per 37 CFR 1.19) or make your position of record in the application. Alternatively, you may arrange to do any of the preceding through a registered patent attorney or agent presenting written authorization from you. If you care to join the application, counsel of record (see below) would presumably assist you. Joining in the application would entail the filing of an appropriate oath or declaration by you pursuant to 37 CFR 1.63.

Telephone inquiries regarding this communication should be directed to the undersigned at (703) 305-0014. Requests for information regarding your application should be directed to the File Information Unit at (703) 308-2733. Information regarding how to pay for and order a copy of the application, or a specific paper in the application, should be directed to Certification Division at (703) 308-9726 or 1-800-972-6382 (outside the Washington D.C. area).

Derek L. Woods
Petitions Attorney
Office of Petitions

cc: BECTON, DICKINSON AND COMPANY
1 BECTON DRIVE
FRANKLIN LAKES, NJ 07417-1880

UNITED STATES PATENT AND TRADEMARK OFFICE

Commissioner for Patents
United States Patent and Trademark Office
P.O. Box 1450
Alexandria, VA 22313-1450
www.uspto.gov

Weaver Austin Villeneuve & Sampson, LLP
P.O. BOX 70250
OAKLAND, CA 94612-0250

COPY MAILED

MAR 1 1 2009

OFFICE OF PETITIONS

In re Application of	:	
Ravikanth V. Samprathi, et. al.	:	
Application No. 10/411,698	:	DECISION ON PETITION
Filed: April 11, 2003	:	
Attorney Docket No. CISCP335/6418	:	

This is a decision on the petition, filed July 17, 2008, which is being treated as a petition under 37 CFR 1.8(a), requesting that the amendment be accorded a filing date of July 7, 2008, rather than the presently accorded date of July 8, 2008. The delay in responding is regretted.

A non-final Office action was mailed on April 4, 2008, which set a three month shortened statutory period for reply. Accordingly, a reply was due on or before July 7, 2008[1].

In response, the Office received an amendment filed by the Electronic Filing System (EFS-Web Transmission) on July 8, 2008. On July 17, 2008, the present petition was filed requesting that the Office correct the filing date of the amendment to July 7, 2008.

Since Office records show that the amendment received on July 8, 2008, contains a Certificate of EFS-Web Transmission dated for July 7, 2008, the amendment is accepted as being timely filed. Therefore, the petition is **GRANTED**.

This application is being referred to the Office of Data Management for further processing into a patent.

Andrea Smith
Petitions Examiner
Office of Petitions

[1] It is noted that July 4, 2008 was a holiday; therefore, petitioner had the next succeeding business day of July 7, 2008 to file a proper response to the Office action.

UNITED STATES PATENT AND TRADEMARK OFFICE

COMMISSIONER FOR PATENTS
UNITED STATES PATENT AND TRADEMARK OFFICE
P.O. BOX 1450
ALEXANDRIA, VA 22313-1450
www.uspto.gov

Paper No. 4

BURNS DOANE SWECKER & MATHIS LLP
PO BOX 1404
ALEXANDRIA VIRGINIA 22313-1404

COPY MAILED

JUL 1 8 2003

OFFICE OF PETITIONS

In re Application of Borchers Application No. 10/411,704 Filed: April 12, 2003 Attorney Docket No. 032566-042	DECISION ON PETITION

This is a decision on the petition filed June 30, 2003, which requests under the alternate provisions of 37 CFR 1.10(c) and § 1.10(d) the above-identified application be accorded a filing date of April 11, 2003, instead of the currently accorded filing date of April 12, 2003.

The petition is dismissed.

Applicant is given a TWO MONTH period from the date of this decision to renew the petition. See 37 CFR 1.181(f). No extensions of time under 37 CFR 1.136(a) or (b) are permitted.

Petitioner asserts that the above-identified correspondence was deposited with the USPS by way of the Express Mail Post Office to Addressee Service set forth in 37 CFR 1.10 on Friday, April 11, 2003, under Express Mail Label No. EL279346721US prior to the last scheduled pick up of 6:30 p.m. at the post office at 65 T.W. Alexander Dr., Durham North Carolina, by counsel's courier service Triangle Express. Petitioner acknowledges that the customer copy of the Express Mail Post Office to Addressee Service mailing label for this correspondence cannot be produced, but points to: (1) the fact that there is no Express Mail service at that post Office on Saturday, and (2) a copy of a printout of the USPS "Track & Confirm" database for the aforementioned mailing label no. shows that correspondence to have been "enroute" as of 3:09 a.m. on April 12, 2003. The evidence supplied by petitioner includes a copy of counsel's Express Mail log for the aforementioned mailing label showing that the instant correspondence was placed in the outgoing Mail bin on April 11, 2003 at 12:00 p.m. for pickup by the courier service and subsequent delivery to the USPS at 4:00 p.m..

With respect to the petition considered under 37 CFR 1.10(c):

Absent a true copy of the Express Mail Post Office to Addressee Service mailing label or other official USPS notation showing the date of deposit with the USPS of this correspondence to be April 11, 2003, petitioner cannot show that there is a discrepancy between the USPS "date-in" and the filing date the USPTO accorded the above-identified application. See 37 CFR 1.10(c)(3).

With respect to the petition considered under 37 CFR 1.10(d):

37 CFR 1.10(d) sets forth procedures for filing a petition to obtain a filing date as of the actual date of deposit of correspondence with the USPS, where an applicant asserts that the "date-in" has been incorrectly entered by the USPS. Any petition under this section of the rule must, *inter alia*, must be corroborated by (1) evidence from the USPS, or (2) evidence that came into being after deposit with the USPS and within one business day of deposit of the correspondence, showing the correspondence was deposited with the USPS prior to the last scheduled pickup for that day. See 37 CFR 1.10(d)(3).

Taking item (2) first, the copy of the express Mail log of record is ineffective as corroborative evidence within the meaning of 37 CFR 1.10(d)(3), as the showing of record is that the log entries were created *prior* to the Triangle Express pickup of the correspondence at counsel's office and not *subsequent to the deposit of the correspondence at issue with the USPS.*

As to item (1) the copy of the USPS "Track & Confirm" printout does not facially admit or establish error on the part of the USPS in, presumably, placing a "date-in" of April 12, 2003, on the correspondence in question. Petitioner is reminded that persons who, as here, deal indirectly with employees of the USPS assume the risk of receiving a "date-in" that is not the desired date; or even not receiving a copy of the Express Mail label. See 37 CFR 1.10(b). Here, petitioner dealt *indirectly* with the USPS in (1) employing a courier service, and (2) not obtaining directly, and concurrently, from the USPS an Express Mail label with the "date-in" thereon, whereby the accuracy of any USPS notation could be immediately checked on the alleged date of deposit.

Here, there is no adequate showing that the correspondence designated by Express Mail label No. EL279346721US was entrusted to either a USPS employee or drop box prior to the last scheduled pickup for the day within the meaning of 37 CFR 1.10(b),(d) on April 11, 2003. The copy of the USPS "Track & Confirm" printout only attests to the fact that the correspondence was in the possession of the USPS on Saturday, April 12, 2003; it does not attest to the fact that the correspondence was in the possession of the USPS within the meaning of 37 CFR 1.10(b),(d) on Friday, April 11, 2003. As such, there is no showing that the USPS acted in other than its usual and customary manner with respect to the correspondence in question under 37 CFR 1.10.

Petitioner is also reminded that the importance for those who rely upon the Express Mail procedure to be aware of USPS schedules dates back to the final rulemaking published on January 20, 1983, at 48 Fed. Reg. 2696-2714 and on February 1, 1983, at 1027 Off. Gaz. Pat. & TM Office 9. The following comment appeared therein:

> Comment: One person questioned what treatment will be accorded a paper placed in an 'Express Mail' box receptacle after the box has been cleared for the last time on a given day.
>
> Reply: The paper will be considered to be deposited as of the date of receipt indicated on the 'Express Mail' mailing label by the Postal Service clerk.

Registered practitioners and the general public were advised at the time § 1.10 was originally promulgated of the Director's interpretation of the language adopted in the final

rulemaking. The Commissioner clearly stated that any correspondence placed in an Express Mail drop box after the box had been cleared for the last time on a given day would be considered to be deposited as of the date of receipt indicated on the Express Mail mailing label by the Postal Service clerk. This interpretation was published in both the *Federal Register* and in the *Official Gazette* in 1983. In addition, the notice of final rulemaking, as well as the supplemental information, was republished on numerous occasions in the *Official Gazette* (e.g., see 1086 TM Off. Gaz. 108 (January 5, 1988); 1098 TM Off. Gaz. 110 (January 3, 1989); 1110 Off. Gaz. Pat. & TM 104 (January 2, 1990); and 1122 TM Off. Gaz. 102 (January 1, 1991)).

Further correspondence with respect to this matter should be addressed as follows:

By mail: Mail Stop PETITION
Commissioner for Patents
Post Office Box 1450
Alexandria, VA 22313-1450

By FAX: (703) 308-6916
Attn: Office of Petitions

By hand: Crystal Plaza Four, Suite 3C23
2201 South Clark Place
Arlington, VA 22202

Telephone inquiries concerning this decision may be directed to the undersigned at (703) 305-1820.

Brian Hearn

Brian Hearn
Petitions Examiner
Office of Petitions
Office of the Deputy Commissioner
for Patent Examination Policy

UNITED STATES PATENT AND TRADEMARK OFFICE

Commissioner for Patents
United States Patent and Trademark Office
P.O. Box 1450
Alexandria, VA 22313-1450
www.uspto.gov

John F. Letchford
Archer & Greiner, P.C.
One Cenennial Square
Haddonfield, NJ 08033

COPY MAILED

MAR 21 2007

OFFICE OF PETITIONS

In re Application of

George E. Alliss
Application No. 10/411,708
Filed: April 14, 2003
Attorney Docket No. 11246-0012

DECISION ON PETITION
TO WITHDRAW
FROM RECORD

This is a decision on the Request to Withdraw as attorney or agent of record under 37 C.F.R. § 1.36(b), filed August 25, 2006.

The request is **APPROVED**.

A grantable request to withdraw as attorney/agent of record must be signed by every attorney/agent seeking to withdraw or contain a clear indication that one attorney is signing on behalf of another/others. A request to withdraw will not be approved unless at least 30 (thirty) days would remain between the date of approval and the later of the expiration date of a time to file a response or the expiration date of the maximum time period which can be extended under 37 C.F.R. § 1.136(a).

The request was signed by John F. Letchford on behalf of all attorneys of record.

All attorneys/agents associated have been withdrawn.

Applicant is reminded that there is no attorney of record at this time.

The request to change the correspondence of record is not acceptable as the requested correspondence address is not that of: (1) the first named signing inventor; or (2) an intervening assignee of the entire interest under 37 C.F.R 3.71. All future communications from the Office will be directed to the first named signing inventor at the first copied address below until otherwise properly notified by the applicant.

The application became abandoned for failure to timely respond to the Office action mailed May 15, 20006.

Telephone inquiries concerning this decision should be directed to Terri Williams at 571-272-2991.

T. Williams

Terri Williams
Petitions Examiner
Office of Petitions

cc: **George E. Alliss**
82 Sandpit Road
Lumberton, NC 28358

cc: **Alex Phinn**
275 Lower Morrisville Road
Fallsington, PA 19054

UNITED STATES PATENT AND TRADEMARK OFFICE

UNITED STATES DEPARTMENT OF COMMERCE
United States Patent and Trademark Office
Address: COMMISSIONER FOR PATENTS
P.O. Box 1450
Alexandria, Virginia 22313-1450
www.uspto.gov

APPLICATION NUMBER	FILING OR 371 (c) DATE	FIRST NAMED APPLICANT	ATTY. DOCKET NO./TITLE
10/411,708	04/14/2003	George E. Alliss	11246-0012

CONFIRMATION NO. 9900

OC000000023004227

OC000000023004227

41716
JOHN F. LETCHFORD
ARCHER & GREINER, P.C.
ONE CENENNIAL SQUARE
HADDONFIELD, NJ 08033

Date Mailed: 03/21/2007

NOTICE REGARDING CHANGE OF POWER OF ATTORNEY

This is in response to the Power of Attorney filed 08/25/2006.

- The withdrawal as attorney in this application has been accepted. Future correspondence will be mailed to the new address of record. 37 CFR 1.33.

Terri S. Williams

Office of Initial Patent Examination (571) 272-4000, or 1-800-PTO-9199

FORMER ATTORNEY/AGENT COPY

UNITED STATES PATENT AND TRADEMARK OFFICE

Commissioner for Patents
United States Patent and Trademark Office
P.O. Box 1450
Alexandria, VA 22313-1450
www.uspto.gov

KEVIN T. LUSARDI
355 GREEN ROAD
SPARTA, NJ 07871

COPY MAILED

NOV 22 2005

OFFICE OF PETITIONS

In re Application of
Kevin T. Lusardi
Application No. 10/411,718
Filed: April 12, 2003
For: WRAP-IT

DECISION GRANTING PETITION
UNDER 37 CFR 1.313(c)(2)

This is a decision on the petition, filed November 21, 2005, under 37 CFR 1.313(c)(2) to withdraw the above-identified application from issue after payment of the issue fee.

The petition is **GRANTED**.

The above-identified application is withdrawn from issue for consideration of a submission under 37 CFR 1.114 (request for continued examination). See 37 CFR 1.313(c)(2).

Petitioner is advised that the issue fee paid on September 22, 2005 in the above-identified application cannot be refunded. If, however, the above-identified application is again allowed, petitioner may request that it be applied towards the issue fee required by the new Notice of Allowance.[1]

Telephone inquiries should be directed to the undersigned at (571) 272-3218.

This matter is being referred to Technology Center AU 3677 for processing of the request for continued examination under 37 CFR 1.114 and for consideration of a concurrently filed amendment.

Frances Hicks
Petitions Examiner
Office of Petitions

---

[1] *The request to apply the issue fee to the new Notice may be satisfied by completing and returning the new Issue Fee Transmittal Form PTOL-85(b) (along with any balance due at the time of payment), which includes the following language thereon: "Commissioner for Patents is requested to apply the Issue Fee and Publication Fee (if any) or re-apply any previously paid issue fee to the application identified above." Petitioner is advised that, whether a fee is indicated as being due or not, the Issue Fee Transmittal Form* ***must*** *be completed and timely submitted to avoid abandonment. Note the language in bold text on the first page of the Notice of Allowance and Fee(s) Due (PTOL-85).*

UNITED STATES PATENT AND TRADEMARK OFFICE

UNITED STATES DEPARTMENT OF COMMERCE
United States Patent and Trademark Office
Address: COMMISSIONER FOR PATENTS
P.O. Box 1450
Alexandria, Virginia 22313-1450
www.uspto.gov

VOLPE AND KOENIG, P.C.
DEPT. ICC
UNITED PLAZA, SUITE 1600
30 SOUTH 17TH STREET
PHILADELPHIA, PA 19103

Mail Date: 04/21/2010

Applicant	: John David Kaewell JR.	: DECISION ON REQUEST FOR
Patent Number	: 7630690	: RECALCULATION of PATENT
Issue Date	: 12/08/2009	: TERM ADJUSTMENT IN VIEW
Appliction No	: 10/411,739	: OF WYETH AND NOTICE OF INTENT TO
Filed	: 04/11/2003	: ISSUE CERTIFICATE OF CORRECTION
		:

The Request for Recalculation is **GRANTED** to the extent indicated.

The patent term adjustment has been determined to be **1287** days. The USPTO will *sua sponte* issue a certificate of correction reflecting the amount of PTA days determined by the recalculation.

Prior to the issuance of the certificate of correction, the USPTO will afford patentee an opportunity to be heard and request reconsideration. Accordingly, patentee has **one month or thirty (30) days**, whichever is longer, to file a request for reconsideration of this patent term adjustment calculation. See 35 U.S.C. 154(b)(3)(B)(ii) and 37 CFR 1.322(a)(4). No extensions of time will be granted under 37 CFR 1.136.

Patentee should use document code PET.OP if electronically filing a request for reconsideration of this patent term adjustment calculation. The patentee must also include the information required by 37 CFR 1.705(b)(2) and the fee required by 37 CFR 1.18(e). If patentee does not file a timely request for reconsideration of this patent term adjustment calculation including the information required by 37 CFR 1.705(b)(2) and the fee required by 37 CFR 1.18(e), the USPTO will issue a certificate of correction reflecting the PTA determination noted above.

Patentee should be aware that in order to preserve the right to review in the United States District Court for the District of Columbia of the USPTO patent term adjustment determination, patentee must ensure that he or she also take the steps required under 35 U.S.C. 154(b)(4)(A) in a timely manner. Nothing in the request for recalculation should be construed as providing an alternative time frame for commencing a civil action under 35 U.S.C. 154(b)(4)(A).

Any questions concerning this decision should be directed to the Office of Patent Legal Administration at 571-272-7702.

UNITED STATES PATENT AND TRADEMARK OFFICE

Commissioner for Patents
United States Patent and Trademark Office
P.O. Box 1450
Alexandria, VA 22313-1450
www.uspto.gov

Paper No. 7

ROBERT A. KENT
HALIBURTON ENERGY SERVICES
2600 SOUTH 2ND STREET
DUNCAN, OK 73536

COPY MAILED
JUN 2 9 2004
OFFICE OF PETITIONS

In re Application of :
Phillipi et al. :
Application No. 10/411,764 :
Filed: April 11, 2003 : ON PETITION
Attorney Docket Number: :
2003-IP-009826U1

This is a decision in response to the Petition under 37 CFR 1.137(b), filed April 20, 2004 (Certificate of Express Mailing dated April 19, 2004), to revive the above-identified application.

This Petition is hereby **granted**.

The above-identified application became abandoned for failure to reply in a timely manner to the Notice to File Missing Parts of Provisional Application (hereinafter "Notice"), mailed June 6, 2003. The Notice required an executed oath/declaration and a late filing fee or oath or declaration surcharge in order to avoid abandonment. The Notice set a two (2) month period for reply from the mail date of the Notice, and also provided for extensions of time under 37 CFR 1.136(a). No reply having been received, the application became abandoned on August 7, 2003.

With the instant Renewed Petition, Petitioner has filed an executed oath/declaration and a late filing fee or oath or declaration surcharge in response to the Notice and satisfied the requirements of a grantable petition under 37 CFR 1.137(b).

The application is being returned to the Office of Initial Patent Examination for continued processing.

Telephone inquiries concerning this matter should be directed to the undersigned at (703) 305-0014.

Derek L. Woods
Petitions Attorney
Office of Petitions

UNITED STATES PATENT AND TRADEMARK OFFICE

Commissioner for Patents
United States Patent and Trademark Office
P.O. Box 1450
Alexandria, VA 22313-1450
www.uspto.gov

APR 27 2005

John S Page
25092 Farthing Street #61
Lake Forest CA 92630-4034

In re Application of: Page	:	**DECISION ON**
Application No.: 10/411,783	:	**PETITION UNDER**
Filed: April 11, 2003	:	**37 CFR 1.181**
For: Drag Lift Sailboat	:	

This is a decision on the petition for supervisory review filed November 05, 2004 under 37 CFR 1.181. Applicant is requesting the relief of extending the response time to the November 05, 2004 filing date of the petition with acceptance of the amendment attached thereto, and withdrawal of the holding of abandonment of November 02, 2004.

The petition is **Granted** to the extent indicated below.

On June 25, 2004 applicant filed an amendment that was not in compliance with 37 CFR 1.121. A notice explaining the deficiencies was mailed to applicant August 23, 2004, and applicant was given a one month time period to correct the noted defects. This time period was extendable under 37 CFR 1.136(a). On September 10, 2004 applicant filed a corrective amendment that was still not in compliance with 37 CFR 1.121. A notice to this effect was mailed October 26, 2004 and no additional time for response was given. On November 02, 2004 the application was abandoned for failure to file a compliant response.

With regard to applicant's first requested relief, this relief is not granted. Applicant was given an explanation of the defects in the amendment filed June 25, 2004, and given a time period of one month to correct those defects. Because the additional amendment of September 10, 2004 contained the same defects as amendment of June 25, 2004, the decision not to give applicant an additional time period in the non-compliant notice of October 26, 2004 was proper and in accordance with USPTO procedure. Accordingly, no additional time will be given in this case.

With regard to applicant's second requested relief, the application was abandoned prematurely. Because the original non compliant notice of August 23, 2004 set an extendable time period, the abandonment notice

of November 02, 2004, was premature and mailed in error. Applicant could have purchased extensions of time in response to the second notice at the time the application was prematurely abandoned. On November 05, 2004 applicant filed the instant petition, and included a compliant amendment. If applicant had filed a 2-month extension of time at the time of filing of the compliant amendment or prior to November 23, 2004, the amendment would have been entered and forwarded to the examiner for consideration. Because the application was prematurely abandoned by the Office shortly after mailing of the October 26, 2004 notice while applicant still had a response period pending, Applicant was effectively prevented from filing the extension of time because of the incorrect notification of the abandoned status of the application. Applicant was contacted by Supervisory Patent Examiner (SPE) S. Joseph Morano on February 15, 2005, and informed that if the 2-month extension of time was filed, the petition to withdraw the holding of abandonment would be granted. On February 15, 2005, applicant supplied the necessary extension of time, and accordingly the holding of abandonment is hereby withdrawn.

This application has been forwarded to the Supervisory Legal Instruments Examiner for restoration of the application to pending status and entry of applicant's compliant amendment of November 05, 2004. Upon entry of the amendment the application will be forwarded to the examiner for consideration.

Any questions regarding this decision should be directed towards SPE S. Joseph Morano at (571) 272-6684. Any questions regarding the status of the amendment or other examination matters should be directed to the examiner of record, Jesus D. Sotelo, at (571) 272-6686.

Summary: Petition **Granted**

Robert J. Oberleitner
Director, Technology Center 3600

Sjm: 4/19/2005

UNITED STATES PATENT AND TRADEMARK OFFICE

Commissioner for Patents
United States Patent and Trademark Office
P.O. Box 1450
Alexandria, VA 22313-1450
www.uspto.gov

APR 27 2005

John S Page
25092 Farthing Street #61
Lake Forest CA 92630-4034

In re Application of: Page	:	**DECISION ON**
Application No.: 10/411,783	:	**PETITION UNDER**
Filed: April 11, 2003	:	**37 CFR 1.181**
For: Drag Lift Sailboat	:	

This is a decision on the petition for supervisory review filed November 05, 2004 under 37 CFR 1.181. Applicant is requesting the relief of extending the response time to the November 05, 2004 filing date of the petition with acceptance of the amendment attached thereto, and withdrawal of the holding of abandonment of November 02, 2004.

The petition is **Granted** to the extent indicated below.

On June 25, 2004 applicant filed an amendment that was not in compliance with 37 CFR 1.121. A notice explaining the deficiencies was mailed to applicant August 23, 2004, and applicant was given a one month time period to correct the noted defects. This time period was extendable under 37 CFR 1.136(a). On September 10, 2004 applicant filed a corrective amendment that was still not in compliance with 37 CFR 1.121. A notice to this effect was mailed October 26, 2004 and no additional time for response was given. On November 02, 2004 the application was abandoned for failure to file a compliant response.

With regard to applicant's first requested relief, this relief is not granted. Applicant was given an explanation of the defects in the amendment filed June 25, 2004, and given a time period of one month to correct those defects. Because the additional amendment of September 10, 2004 contained the same defects as amendment of June 25, 2004, the decision not to give applicant an additional time period in the non-compliant notice of October 26, 2004 was proper and in accordance with USPTO procedure. Accordingly, no additional time will be given in this case.

With regard to applicant's second requested relief, the application was abandoned prematurely. Because the original non compliant notice of August 23, 2004 set an extendable time period, the abandonment notice

of November 02, 2004, was premature and mailed in error. Applicant could have purchased extensions of time in response to the second notice at the time the application was prematurely abandoned. On November 05, 2004 applicant filed the instant petition, and included a compliant amendment. If applicant had filed a 2-month extension of time at the time of filing of the compliant amendment or prior to November 23, 2004, the amendment would have been entered and forwarded to the examiner for consideration. Because the application was prematurely abandoned by the Office shortly after mailing of the October 26, 2004 notice while applicant still had a response period pending, Applicant was effectively prevented from filing the extension of time because of the incorrect notification of the abandoned status of the application. Applicant was contacted by Supervisory Patent Examiner (SPE) S. Joseph Morano on February 15, 2005, and informed that if the 2-month extension of time was filed, the petition to withdraw the holding of abandonment would be granted. On February 15, 2005, applicant supplied the necessary extension of time, and accordingly the holding of abandonment is hereby withdrawn.

This application has been forwarded to the Supervisory Legal Instruments Examiner for restoration of the application to pending status and entry of applicant's compliant amendment of November 05, 2004. Upon entry of the amendment the application will be forwarded to the examiner for consideration.

Any questions regarding this decision should be directed towards SPE S. Joseph Morano at (571) 272-6684. Any questions regarding the status of the amendment or other examination matters should be directed to the examiner of record, Jesus D. Sotelo, at (571) 272-6686.

Summary: Petition **Granted**

Robert J. Oberleitner
Director, Technology Center 3600

Sjm: 4/19/2005
SM

PET DEC

PTO/SB/83 (04-05)
Approved for use through 11/30/2005. OMB 0651-0035
U.S. Patent and Trademark Office, U.S. DEPARTMENT OF COMMERCE
Under the Paperwork Reduction Act of 1995, no persons are required to respond to a collection of information unless it displays a valid OMB control number.

REQUEST FOR WITHDRAWAL AS ATTORNEY OR AGENT AND CHANGE OF CORRESPONDENCE ADDRESS

Application Number	10/411,783
Filing Date	04-11-2003
First Named Inventor	L. D. Brandon
Art Unit	1744
Examiner Name	Gary K. Graham
Attorney Docket Number	2720-001

To: Commissioner for Patents
P.O. Box 1450
Alexandria, VA 22313-1450

Approved 7/27/05
JMStone
Jacqueline M. Stone, Director
Technology Center 1700

Please withdraw me as attorney or agent for the above identified patent application, and

- ☐ all the attorneys/agents of record.
- ☐ the attorneys/agents (with registration numbers) listed on the attached paper(s), or
- ☑ the attorneys/agents associated with Customer Number 23547

NOTE: This box can only be checked when the power of attorney of record in the application is to all the practitioners associated with a customer number.

The reasons for this request are: Applicant, L.D. Brandon, has terminated the undersigned's representation by filing a Notice of Appeal pro se on May 31, 2005. Accordingly, more than thirty (30) days remain before the expiration date of a period for response, i.e., the filing of an appeal brief. A copy of this correspondence is being mailed to the Applicant on even date herewith. All future correspondence received by the undersigned relating this application will be forwarded promptly to the Applicant.

CORRESPONDENCE ADDRESS

1. ☐ The correspondence address is NOT affected by this withdrawal.
2. ☑ Change the correspondence address and direct all future correspondence to:

☐ The address associated with Customer Number:

OR

☑ Firm or Individual Name	L.D. Brandon				
Address	1313 David Drive				
City	Choctaw	State	OK	Zip	73020
Country	United States				
Telephone	405-454-2124	Email			
Signature	Mary M Lee				
Name	Mary M. Lee	Registration No.	31,976		
Date	06/16/2005	Telephone No.	405-285-4490		

NOTE: Withdrawal is effective when approved rather than when received. Unless there are at least 30 days between approval of withdrawal and the expiration date of a time period for response or possible extension period, the request to withdraw is normally dissapproved.

This collection of information is required by 37 CFR 1.36. The information is required to obtain or retain a benefit by the public which is to file (and by the USPTO to process) an application. Confidentiality is governed by 35 U.S.C. 122 and 37 CFR 1.11 and 1.14. This collection is estimated to take 12 minutes to complete, including gathering, preparing, and submitting the completed application form to the USPTO. Time will vary depending upon the individual case. Any comments on the amount of time you require to complete this form and/or suggestions for reducing this burden, should be sent to the Chief Information Officer, U.S. Patent and Trademark Office, U.S. Department of Commerce, P.O. Box 1450, Alexandria, VA 22313-1450. DO NOT SEND FEES OR COMPLETED FORMS TO THIS ADDRESS. SEND TO: Commissioner for Patents, P.O. Box 1450, Alexandria, VA 22313-1450.

If you need assistance in completing the form, call 1-800-PTO-9199 and select option 2.

UNITED STATES PATENT AND TRADEMARK OFFICE

COMMISSIONER FOR PATENTS
UNITED STATES PATENT AND TRADEMARK OFFICE
P.O. BOX 1450
ALEXANDRIA, VA 22313-1450
www.uspto.gov

Paper No. 4

MAIL

JAN 13 2004

DIRECTOR OFFICE
TECHNOLOGY CENTER 2600

GREENBERG TRAURIG, P.C.
77 WEST WACKER DRIVE
CHICAGO IL 60601-1732

In re Application of
Escobosa et al.
Application No. 10/411,792
Filed: April 11, 2003
For: CUSTOMIZABLE AND UPGRADABLE DEVICES AND METHODS RELATED THERETO

DECISION ON PETITION TO MAKE SPECIAL

This is a decision on the petition filed April 11, 2003 under Manual of Patent Examination Procedure §708.02, VIII requesting accelerated examination.

The petition under Manual of Patent Examination Procedure §708.02, VIII, must:
(1) be filed prior to receiving any examination by the examiner,
(2) be accompanied by the required fee- $130,
(3) the claims should be directed to a single invention (if it is determined that the claims pertain to more than one invention, then applicant will have to make an election without traverse or forfeit accelerated examination status),
(4) state that a pre-examination search was made, and fully discuss the search method employed, such as classes and subclasses searched, publications, Chemical abstracts, patents, etc. A search made by a foreign patent office satisfies this requirement,
(5) be accompanied by a copy of each of the references most closely related to the subject matter encompassed by the claims if said references are not already of record,
(6) fully discuss the references, pointing out with the particularity required by 37 C.F.R. §1.111 (b) and (c), how the claimed subject matter is patentable over the references.

The petitioner meets all the above-listed requirements. Accordingly, the petition is GRANTED.

The application will retain its special status throughout its entire prosecution, including any appeal to the Board of Patent Appeals and Interferences, subject only to diligent prosecution by the applicant. The application file is being forwarded to the examiner for appropriate action in due course.

Krista Zele
Special Program Examiner
Technology Center 2600
Communications

UNITED STATES PATENT AND TRADEMARK OFFICE

COMMISSIONER FOR PATENTS
UNITED STATES PATENT AND TRADEMARK OFFICE
P.O. BOX 1450
ALEXANDRIA, VA 22313-1450
www.uspto.gov

Paper No. 8

GABOR L. SZEKERES
8141 E. KAISER BLVD. SUITE 112
ANAHEIM, CA 92808

COPY MAILED

MAR 3 0 2004

OFFICE OF PETITIONS

In re Application of
Duran et al.
Application No. 10/411,797
Filed: April 11, 2003
Attorney Docket No. 362-10-PA

ON PETITION

This decision concerns the March 22, 2004 petition under 37 CFR 1.137(b).

The petition is **GRANTED.**

The application became abandoned on August 6, 2003 for failure to timely submit a properly signed oath or declaration as required by the June 5, 2003 "Notice to File Missing Parts of Nonprovisional Application."

A grantable petition under 37 CFR 1.137(b), in the instant case, must be accompanied by: (1) a properly signed oath or declaration and the $65 surcharge (small entity) for late filing of such an oath or declaration; (2) the $665 petition fee (small entity); and (3) a statement that the entire delay in filing a proper oath or declaration from the due date until the filing of a grantable §1.137(b) petition was unintentional.

The instant petition meets the above requirements and is thus granted. The application is now complete.

The file is being forwarded to Technology Center 3700 for examination in due course.

Telephone inquiries should be directed to the undersigned at (703) 308-0763.

RC Tang
Petitions Attorney
Office of Petitions

UNITED STATES PATENT AND TRADEMARK OFFICE

Commissioner for Patents
United States Patent and Trademark Office
P.O. Box 1450
Alexandria, VA 22313-1450
www.uspto.gov

Mailed: 5/16/05

dss
Paper Number _____

In re application of
Chou-Feng Lee.
Serial No.10/411,799
Filed: April 11, 2003
For: METHOD OF REMOVING A VIA FENCE

DECISION ON PETITION

This is a response to the PETITION TO THE COMMISSIONER UNDER 37 C.F.R. § 1.181(a) filed March 03, 2005. The petition requests that the abandonment, as set forth in the Notice of Abandonment of February 23, 2005 for failure to pay the Issue Fee, be withdrawn since the applicant did timely pay the Issue Fee.

DECISION

The instant request has been accepted as a petition to withdraw the holding of abandonment under the provisions of 37 CFR 1.181 (no fee) - no abandonment-in-fact. A review of the USPTO application file reveals that applicant's response was properly filed on January 25, 2005 . The papers filed January 25, 2005 authorizing payment of required fees from the deposit account 04-1679. An account statement from the PTO for deposit account 04-1679(attached to the instant petition) for January of 2005 and specifically January 25, 2005 indicate sufficient funds were available for required Issue fees. In view of this authorization, applicants should have been charged the required fees.

Therefore, in view of the fact that applicants deposit account should have been charged the required fees for issue, any holding of abandonment is hereby vacated, and the application has been returned to pending status. The application shall be forwarded for charging of any required fees and processing to the Publication Division.

The Petition is **GRANTED**.

Jacqueline Stone, Director
Technology Center 1700
Chemical and Materials Engineering

Steven E. Koffs
DUANE MORRIS LLP
One Liberty Place
Philadelphia, PA 19103-7396

UNITED STATES PATENT AND TRADEMARK OFFICE

Commissioner for Patents
United States Patent and Trademark Office
P.O. Box 1450
Alexandria, VA 22313-1450
www.uspto.gov

MOTOROLA INC
600 NORTH US HIGHWAY 45
ROOM AS437
LIBERTYVILLE, IL 60048-5343

In re Application of	:
Rye and Ramsden	:
Application No.: 10/411,809	:
Filed: May 14, 2002	: ON PETITION
Attorney Docket No. 1279-273C1	:

This is responsive to the petition under 37 CFR 1.137(b) filed July 14, 2005.

The petition is **dismissed as moot**.

A review of the application revealed that a "Notice of Allowance and Issue Fee Due" and "Notice of Allowability" were mailed on May 12, 2005, allowing a non-extendable period for reply of three months from its mailing date. The notices required payment of the issue fee and corrected drawings to be filed, respectively. The issue fee was paid on June 3, 2005, and corrected drawings were filed on July 14, 2005—all within the three-month statutory period set for reply. The application does not appear to be in an abandoned status. There is no relief that can be provided by the instant petition under 37 CFR 1.137(b). The petition is dismissed as moot, accordingly.

Deposit account 50-2117 will be refunded $1500.00 for the petition fee.

The Power of Attorney filed July 14, 2005, is noted and made of record.

The address as cited on the petition differs from the address of record. Although a courtesy copy of this decision is being mailed to the address as cited on the decision, all future correspondence will be mailed solely to the address of record unless appropriate written instructions to the contrary are received.

The application file is being directed to the Office of Patent Publications for further processing.

Telephone inquiries concerning this matter may be directed to the undersigned at (571) 272-3222.

Kenya A. McLaughlin
Petitions Attorney
Office of Petitions

Enclosure: "Notice of Acceptance of Power of Attorney"

cc:
Philip H. Burrus, IV
Motorola Inc.—Law Department
1700 Belle Meade Court
Lawrenceville, GA 30043

UNITED STATES PATENT AND TRADEMARK OFFICE

Commissioner for Patents
United States Patent and Trademark Office
P.O. Box 1450
Alexandria, VA 22313-1450
www.uspto.gov

INTEL CORPORATION
C/O INTELLEVATE, LLC
P.O. BOX 52050
MINNEAPOLIS, MN 55402

COPY MAILED

JAN 23 2008

OFFICE OF PETITIONS

In re Application of :
PERING, Trevor A. :
Application No. 10/411,818 : DECISION ON PETITION
Filed: April 9, 2003 :
Attorney Docket No. **P15528** :

This is a decision on the petition under 37 CFR 1.137(b), filed March 30, 2007, to revive the above-identified application.

The petition is **GRANTED.**

The application became abandoned for failure to reply in a timely manner to the non-final Office action mailed, August 23, 2006, which set a shortened statutory period for reply of three (3) months. No extensions of time under the provisions of 37 CFR 1.136(a) were obtained. Accordingly, the application became abandoned on November 24, 2006.

The petition satisfies the requirements of 37 CFR 1.137(b) in that petitioner has supplied (1) the reply in the form of an amendment; (2) the petition fee of $1500; and (3) an adequate statement of unintentional delay.

The file does not indicate a change of address has been submitted, although the address given on the petition differs from the address of record. If appropriate, a change of address should be filed in accordance with MPEP 601.03. A courtesy copy of this decision is being mailed to the address given on the petition; however, the office will mail all future correspondence solely to the address of record.

Telephone inquiries concerning this decision should be directed to Monica A. Graves at (571) 272-7253.

The application file is being referred to Technology Center Art Unit 2195 for consideration of the amendment filed March 30, 2007

Sherry D. Brinkley
Petitions Examiner
Office of Petitions

cc: **INTEL CORPORATION**
1701 INTERVAIL DRIVE, MS: AN1-PTL1
AUSTIN, TX 78746

UNITED STATES PATENT AND TRADEMARK OFFICE

Commissioner for Patents
United States Patent and Trademark Office
P.O. Box 1450
Alexandria, VA 22313-1450
www.uspto.gov

LEYDIG VOIT & MAYER, LTD
TWO PRUDENTIAL PLAZA, SUITE 4900
180 NORTH STETSON AVENUE
CHICAGO IL 60601-6731

MAILED

MAY 2 4 2007

Director's Office
Group 3700

In re Application of:
Hagenbuch, Leroy G.
Serial No. 10/411827
Filed: April 11, 2003
Docket: 221140
Title: BAFFLED TANK FOR A VEHICLE

DECISION ON PETITION
UNDER 37 CFR § 1.144

This is a decision on the petition filed on May 02, 2006 under 37 CFR § 1.144. Petitioner request withdrawal, or at least modification, of the six-way restriction requirement.

The petition is dismissed.

Background

The examiner made a first election requirement mailed December 28, 2004 based on species. After receiving applicant's response filed May 02, 2005, the examiner revised the requirement to a restriction between five different inventions defined in five groupings mailed July 28, 2005. After receiving the response filed October 27, 2005, the examiner contacted the applicant to further elect via a telephone interview between method and article claims of the elected grouping thereby increasing the requirement to six groupings. The examiner made the requirement for the first grouping of five final in a non-final Office action mailed January 25, 2006, and then included the requirement for the last grouping as final in a second non-final Office action mailed July 28, 2006 after a traverse of the groupings in response to each non-final Office action. The petition was filed before the restriction requirement for the last grouping was made final but the petition includes this grouping as well.

Discussion and Decision

Normally, a petition is considered pre-mature if the examiner has not made the requirement final after reconsideration of the requirement based on a proper traverse. See 37 CFR §§ 1.143-1.144 and M.P.E.P. 821. Nevertheless, the examiner erred by not presenting all six groupings for the applicant's consideration to elect from at the same time. When the sixth grouping was formed, the standing restriction requirement of five groupings should have been considered withdrawn

for replacement by a new requirement of six groupings that later could be made final, including all parts of the requirement traversed. See M.P.E.P. 821.01. This could have been accomplished by presenting the five groupings as before but then by further adding that if the first grouping is elected, an additional restriction requirement is set forth as follows and to then provide the appropriate language showing distinctness (and using perhaps A and B to delineate these sub-groupings and to distinguish them from the main groupings I-IV). Instead, the examiner restricted applicant's choices between method or article claims forming sub-groupings of main grouping I, and applicant selected sub-grouping II (now referred to as the sixth grouping) to the article, a tank with baffles. Applicant apparently did not traverse this format, per se, but traverses the restriction requirement as a whole to all the six groupings. Although the filing of the petition was done before the requirement for all six groupings could be made final at the same time, the petition is being treated as if filed after the Office action mailed July 28, 2006 when the requirement to the last grouping was made final. All the groupings are considered incorporated into the finality of the requirement made in the Office action of July 28, 2006.

Notwithstanding that the restriction requirement as it presently stands with all the groupings should have been made simultaneously, or redone so as to be together, upon review of the record, it is seen that the requirement to restrict is proper and the defined listed inventions are distinct. For the reasons set forth.

Petitioner asserts that there is overlap of searches between the groupings even if they are technically distinct, and in view of this, there would be no serious burden to the examiner, and accordingly, the restriction requirement should be withdrawn, or at least, modified to be less groupings. The searches may or may not involve overlap but they certainly would not be coincident throughout. For example, while the commonality to all the claims is a tank, a search for a tank with baffles having openings does not involve the same identical search throughout as a tank having a flow tube and associated valves; or a tank with a pump including a motor, hydraulic bypass valve, and return line; or a tank with an agitation system including an agitation tube with outlets and a pump to cause agitation; or a tank with lifting eyes with associated reinforcing plate and for the purpose of installing a tank on a tanker truck chassis. These distinct inventions each involve subject matter that diverges into different areas, i.e., different classes and subclasses that must be searched for accomplishing a proper and comprehensive search. Moreover, a word search for each invention involves different word queries. MPEP 808.02 states that serious burden can be shown by:

> (A) Separate classification thereof : This shows that each invention has attained recognition in the art as a separate subject for inventive effort, and also a separate field of search. Patents need not be cited to show separate classification.
> (B) A separate status in the art when they are classifiable together : Even though they are classified together, each invention can be shown to have formed a separate subject for inventive effort when the examiner can show a recognition of separate inventive effort by inventors. Separate status in the art may be shown by citing patents which are evidence of such separate status, and also of a separate field of search.
> (C) A different field of search : Where it is necessary to search for one of the inventions in a manner that is not likely to result in finding art pertinent to the other invention(s) (e.g., searching different classes /subclasses or electronic resources, or employing different search queries, a different field of search is shown, even though the two are classified together. The indicated different field of search must in fact be

> pertinent to the type of subject matter covered by the claims. Patents need not be cited to show different fields of search.

Criteria (A) and (C) appear to be met by the examiner's requirement. Moreover, overlap of searches to distinct inventions is not indicative of a lack of serious burden for the examiner. That fact that the searches are not coincident throughout needs to be taken into account as implied by the noted criteria.

Petitioner references burden on the applicant and on the public by the issuance of six patents. This is not a standard for determining the correctness of a restriction requirement.

PETITION DISMISSED.

Any inquiry regarding this decision should be directed to Allan N. Shoap, Special Programs Examiner, at (571) 272-4514.

Karen M. Young

Karen M. Young, Director
Technology Center 3700

UNITED STATES PATENT AND TRADEMARK OFFICE

UNITED STATES DEPARTMENT OF COMMERCE
United States Patent and Trademark Office
Address: COMMISSIONER FOR PATENTS
P.O. Box 1450
Alexandria, Virginia 22313-1450
www.uspto.gov

LAW OFFICE OF IDO TUCHMAN (SJO)
ECM #72212
PO Box 4668
New York, NY 10163-4668

Mail Date: 04/20/2010

Applicant	: Wendell D. Jones	: DECISION ON REQUEST FOR
Patent Number	: 7646705	: RECALCULATION of PATENT
Issue Date	: 01/12/2010	: TERM ADJUSTMENT IN VIEW
Appliction No	: 10/411,828	: OF WYETH AND NOTICE OF INTENT TO
Filed	: 04/11/2003	: ISSUE CERTIFICATE OF CORRECTION
		:

The Request for Recalculation is **GRANTED** to the extent indicated.

The patent term adjustment has been determined to be **2038** days. The USPTO will *sua sponte* issue a certificate of correction reflecting the amount of PTA days determined by the recalculation.

Prior to the issuance of the certificate of correction, the USPTO will afford patentee an opportunity to be heard and request reconsideration. Accordingly, patentee has **one month or thirty (30) days**, whichever is longer, to file a request for reconsideration of this patent term adjustment calculation. See 35 U.S.C. 154(b)(3)(B)(ii) and 37 CFR 1.322(a)(4). No extensions of time will be granted under 37 CFR 1.136.

Patentee should use document code PET.OP if electronically filing a request for reconsideration of this patent term adjustment calculation. The patentee must also include the information required by 37 CFR 1.705(b)(2) and the fee required by 37 CFR 1.18(e). If patentee does not file a timely request for reconsideration of this patent term adjustment calculation including the information required by 37 CFR 1.705(b)(2) and the fee required by 37 CFR 1.18(e), the USPTO will issue a certificate of correction reflecting the PTA determination noted above.

Patentee should be aware that in order to preserve the right to review in the United States District Court for the District of Columbia of the USPTO patent term adjustment determination, patentee must ensure that he or she also take the steps required under 35 U.S.C. 154(b)(4)(A) in a timely manner. Nothing in the request for recalculation should be construed as providing an alternative time frame for commencing a civil action under 35 U.S.C. 154(b)(4)(A).

Any questions concerning this decision should be directed to the Office of Patent Legal Administration at 571-272-7702.

UNITED STATES PATENT AND TRADEMARK OFFICE

Commissioner for Patents
United States Patent and Trademark Office
P.O. Box 1450
Alexandria, VA 22313-1450
www.uspto.gov

COPY MAILED

MAR 1 0 2006

OFFICE OF PETITIONS

DORSEY & WHITNEY, LLP
INTELLECTUAL PROPERTY DEPARTMENT
370 SEVENTEENTH STREET, SUITE 4700
DENVER, CO 80202-5647

In re Application of :
John R. Klug et al :
Application No. 10/411,829 : ON PETITION
Filed: April 10, 2003 :
Attorney Docket No. 5822.04

This is a decision on the petition filed, March 3, 2006 under 37 CFR 1.313(c)(2) to withdraw the above-identified application from issue after payment of the issue fee.

The petition is **GRANTED**.

The above-identified application is withdrawn from issue for consideration of a submission under 37 CFR 1.114 (request for continued examination). See 37 CFR 1.313(c)(2).

Petitioner is advised that the issue fee paid on July 27, 2005 in the above-identified application cannot be refunded. If, however, the above-identified application is again allowed, petitioner may request that it be applied towards the issue fee required by the new Notice of Allowance.[1]

Telephone inquiries should be directed to Irvin Dingle at (571) 272-3210.

This matter is being referred to Technology Center AU 3621 for processing of the request for continued examination under 37 CFR 1.114 and for consideration of the concurrently filed Information Disclosure Statement.

Irvin Dingle
Petitions Examiner
Office of Petitions

---

[1] The request to apply the issue fee to the new Notice may be satisfied by completing and returning the new Issue Fee Transmittal Form PTOL-85(b), which includes the following language thereon: Commissioner for Patents is requested to apply the Issue Fee and Publication Fee (if any) or re-apply any previously paid issue fee to the application identified above. Petitioner is advised that, whether a fee is indicated as being due or not, the Issue Fee Transmittal Form **must** be completed and timely submitted to avoid abandonment. Note the language in bold text on the first page of the Notice of Allowance and Fee(s) Due (PTOL-85).

UNITED STATES PATENT AND TRADEMARK OFFICE

Commissioner for Patents
United States Patent and Trademark Office
P.O. Box 1450
Alexandria, VA 22313-1450
www.uspto.gov

MORGAN & FINNEGAN
3 WORLD FINANCIAL CENTER
NEW YORK NY 10281-2101

COPY MAILED

SEP 24 2004

OFFICE OF PETITIONS

ON PETITION

In re Application of :
Toshihiko Tsuji :
Application No. 10/411,834 :
Filed: April 11, 2003 :
Attorney Docket No. 1232-5019 :

This is a decision on the petition, filed September 23, 2004, under 37 CFR 1.313(c)(2) to withdraw the above-identified application from issue after payment of the issue fee.

The petition is **GRANTED.**

The above-identified application is withdrawn from issue for consideration of a submission under 37 CFR 1.114 (request for continued examination). See 37 CFR 1.313(c)(2).

Petitioner is advised that the issue fee paid on September 2, 2004 in the above-identified application cannot be refunded. If, however, the above-identified application is again allowed, petitioner may request that it be applied towards the issue fee required by the new Notice of Allowance.[1]

Telephone inquiries should be directed to the undersigned at (703) 305-8859.

The examiner of Technology Center AU 2851 will consider the request for continued examination under 37 CFR 1.114.

Karen Creasy

Karen Creasy
Petitions Examiner
Office of Petitions
Office of the Deputy Commissioner
for Patent Examination Policy

---

[1] The request to apply the issue fee to the new Notice may be satisfied by completing and returning the new Issue Fee Transmittal Form PTOL-85(b), which includes the following language thereon: "Commissioner for Patents is requested to apply the Issue Fee and Publication Fee (if any) or re-apply any previously paid issue fee to the application identified above." Petitioner is advised that, whether a fee is indicated as being due or not, the Issue Fee Transmittal Form **must** be completed and timely submitted to avoid abandonment. Note the language in bold text on the first page of the Notice of Allowance and Fee(s) Due (PTOL-85).

UNITED STATES PATENT AND TRADEMARK OFFICE

Commissioner for Patents
United States Patent and Trademark Office
P.O. Box 1450
Alexandria, VA 22313-1450
www.uspto.gov

MCANDREWS HELD & MALLOY, LTD
500 WEST MADISON STREET
SUITE 3400
CHICAGO IL 60661

COPY MAILED

FEB 0 7 2007

OFFICE OF PETITIONS

In re Application of	:	
O'Neill et al.	:	
Application No. 10/411,835	:	DECISION GRANTING PETITION
Filed: April 11, 2003	:	UNDER 37 CFR 1.137(b)
Attorney Docket No. 13888US02	:	

This is a decision on the petition, filed June 13, 2006, which is being treated as a petition under 37 CFR 1.137(b) to revive the instant non-provisional application for failure to timely notify the U.S. Patent and Trademark (USPTO) of the filing of an application in a foreign country, or under a multinational treaty that requires publication of applications eighteen months after filing. *See* 37 CFR 1.137(f).

The petition is **GRANTED**.

Petitioner states that the instant nonprovisional application is the subject of an application filed in an eighteen-month publication country on April 12, 2004. However, the USPTO was unintentionally not notified of this filing within 45 days subsequent to the filing of the subject application in an eighteen-month publication country.

In view of the above, this application became abandoned pursuant to 35 U.S.C. § 122(b)(2)(B)(iii) and 37 CFR 1.213(c) for failure to timely notify the Office of the filing of an application in a foreign country or under a multilateral international agreement that requires publication of applications 18 months after filing.

A petition to revive an application abandoned pursuant to 35 U.S.C. 122(b)(2)(B)(iii) for failure to notify the USPTO of a foreign filing must be accompanied by:

(1) the required reply which is met by the notification of such filing in a foreign country or under a multinational treaty;
(2) the petition fee as set forth in 37 CFR 1.17(m); and
(3) a statement that the entire delay in filing the required reply from the due date of the reply until the filing of a grantable petition was unintentional.

The instant petition has been found to be in compliance with 37 CFR 1.137(b). Accordingly, the failure to timely notify the USPTO of a foreign or international filing within 45 days after the date of filing of such foreign or international application as provided by 35 U.S.C. § 122(b)(2)(B)(iii) and 37 CFR 1.213(c) is accepted as having been unintentionally delayed.

The previous Request and Certification under 35 U.S.C. § 122(b)(2)(B)(i) has been rescinded. A Notice Regarding Rescission of Nonpublication Request which sets forth the projected publication date of May 17, 2007, accompanies this decision on petition.

Telephone inquiries concerning this decision should be directed to the undersigned at (571) 272-3206.

Liana Walsh
Petitions Examiner
Office of Petitions

ATTACHMENT: Notice Regarding Rescission of Nonpublication Request

UNITED STATES PATENT AND TRADEMARK OFFICE

UNITED STATES DEPARTMENT OF COMMERCE
United States Patent and Trademark Office
Address: COMMISSIONER FOR PATENTS
P.O. Box 1450
Alexandria, Virginia 22313-1450
www.uspto.gov

APPLICATION NUMBER	FILING/RECEIPT DATE	FIRST NAMED APPLICANT	ATTY. DOCKET NO.
10/411,835	04/11/2003	Patrick O'Neill	13888US02

CONFIRMATION NO. 3722

23446
MCANDREWS HELD & MALLOY, LTD
500 WEST MADISON STREET
SUITE 3400
CHICAGO, IL 60661

Date Mailed: 02/07/2007

Communication Regarding Rescission Of Nonpublication Request and/or Notice of Foreign Filing

Applicant's rescission of the previously-filed nonpublication request and/or notice of foreign filing is acknowledged. The paper has been reflected in the Patent and Trademark Office's (USPTO's) computer records so that the earliest possible projected publication date can be assigned.

The projected publication date is 05/17/2007.

If applicant rescinded the nonpublication request before or on the date of "foreign filing,"[1] then no notice of foreign filing is required.

If applicant foreign filed the application after filing the above application and before filing the rescission, and the rescission did not also include a notice of foreign filing, then a notice of foreign filing (not merely a rescission) is required to be filed within 45 days of the date of foreign filing. See 35 U.S.C. § 122(b)(2)(B)(iii), and Clarification of the United States Patent and Trademark Office's Interpretation of the Provisions of 35 U.S.C. § 122(b)(2)(B)(ii)-(iv), 1272 Off. Gaz. Pat. Office 22 (July 1, 2003).

If a notice of foreign filing is required and is not filed within 45 days of the date of foreign filing, then the application becomes abandoned pursuant to 35 U.S.C. § 122(b)(2)(B)(iii). In this situation, applicant should either file a petition to revive or notify the Office that the application is abandoned. See 37 CFR 1.137(f). Any such petition to revive will be forwarded to the Office of Petitions for a decision. Note that the filing of the petition will not operate to stay any period of reply that may be running against the application.

Questions regarding petitions to revive should be directed to the Office of Petitions at (571) 272-3282. Questions regarding publications of patent applications should be directed to the patent application publication hotline at (703) 605-4283 or by e-mail pgpub@uspto.gov.

[1] Note, for purpose of this notice, that "foreign filing" means "filing an application directed to the same invention in another country, or under a multilateral international agreement, that requires publication of applications 18 months after filing".

UNITED STATES PATENT AND TRADEMARK OFFICE

Commissioner for Patents
United States Patent and Trademark Office
P.O. Box 1450
Alexandria, VA 22313-1450
www.uspto.gov

PATENTMETRIX
14252 CULVER DR. BOX 914
IRVINE CA 92604

COPY MAILED
JUN 0 6 2008

In re Application of	:	
Scharf et al.	:	
Application No. 10/411870	:	ON PETITION
Filing Date: 04/10/2003	:	
Attorney Docket Number:	:	
DMD102.Ord	:	

This is a decision on the petition under the unintentional provisions of 37 CFR 1.137(b), filed December 2, 2007, to revive the above-identified application. The delay in treating this petition is regretted.

The petition is **GRANTED**.

The application became abandoned for failure to timely file a reply within the meaning of 37 CFR 1.113 to the final Office action of October 31, 2006. The proposed reply required for consideration of a petition to revive must be a Notice of Appeal (and appeal fee required by 37 CFR 41.20(b)(2), an amendment that *prima facie* places the application in condition for allowance, a Request for Continued Examination and submission (37 CFR 1.114), or the filing of a continuing application under 37 CFR 1.53(b). See MPEP 711.03(c)(III)(A)(2). No extensions of time pursuant to the provisions of 37 CFR 1.136(a) were obtained. Accordingly, the date of abandonment of this application is February 1, 2007.

The petition satisfies the requirements of 37 CFR 1.137(b) in that petitioner has supplied (1) the reply in the form of a Request for Continued Examination (RCE) and fee (and the submission required by 37 CFR 1.114; (2) the petition fee; and (3) a proper statement of unintentional delay.

Telephone inquiries concerning this decision should be directed to the undersigned at (571) 272-3232.

This application is being referred to Technology Center AU 3768 for processing of the RCE and for appropriate action by the Examiner in the normal course of business on the amendment submitted in accordance with 37 CFR 1.114.

Derek L. Woods
Attorney
Office of Petitions

UNITED STATES PATENT AND TRADEMARK OFFICE

UNITED STATES DEPARTMENT OF COMMERCE
United States Patent and Trademark Office
Address: COMMISSIONER FOR PATENTS
P.O. Box 1450
Alexandria, Virginia 22313-1450
www.uspto.gov

THE WEBB LAW FIRM, P.C.
700 KOPPERS BUILDING
436 SEVENTH AVENUE
PITTSBURGH, PA 15219

Mail Date: 04/23/2010

Applicant	: Tuomas Sandholm	: DECISION ON REQUEST FOR
Patent Number	: 7640189	: RECALCULATION of PATENT
Issue Date	: 12/29/2009	: TERM ADJUSTMENT IN VIEW
Appliction No	: 10/411,879	: OF WYETH AND NOTICE OF INTENT TO
Filed	: 04/10/2003	: ISSUE CERTIFICATE OF CORRECTION
		:

The Request for Recalculation is **GRANTED** to the extent indicated.

The patent term adjustment has been determined to be **2028** days. The USPTO will *sua sponte* issue a certificate of correction reflecting the amount of PTA days determined by the recalculation.

Prior to the issuance of the certificate of correction, the USPTO will afford patentee an opportunity to be heard and request reconsideration. Accordingly, patentee has **one month or thirty (30) days**, whichever is longer, to file a request for reconsideration of this patent term adjustment calculation. See 35 U.S.C. 154(b)(3)(B)(ii) and 37 CFR 1.322(a)(4). No extensions of time will be granted under 37 CFR 1.136.

Patentee should use document code PET.OP if electronically filing a request for reconsideration of this patent term adjustment calculation. The patentee must also include the information required by 37 CFR 1.705(b)(2) and the fee required by 37 CFR 1.18(e). If patentee does not file a timely request for reconsideration of this patent term adjustment calculation including the information required by 37 CFR 1.705(b)(2) and the fee required by 37 CFR 1.18(e), the USPTO will issue a certificate of correction reflecting the PTA determination noted above.

Patentee should be aware that in order to preserve the right to review in the United States District Court for the District of Columbia of the USPTO patent term adjustment determination, patentee must ensure that he or she also take the steps required under 35 U.S.C. 154(b)(4)(A) in a timely manner. Nothing in the request for recalculation should be construed as providing an alternative time frame for commencing a civil action under 35 U.S.C. 154(b)(4)(A).

Any questions concerning this decision should be directed to the Office of Patent Legal Administration at 571-272-7702.

UNITED STATES PATENT AND TRADEMARK OFFICE

OFFICE

COPY MAILED

SEP 2 0 2005

Director's Office
Office of Patent Publication

WARNER-LAMBERT COMPANY
2800 PLYMOUTH RD
ANN ARBOR, MI 48105

In re Application of	:	
BOSCH, ROBERT LEE, et al.	:	**DECISION ON PETITION**
Application No. 10/411,886	:	
Filed: April 11, 2003	:	
Attorney Docket No. PD5617-D2-01-FJT	:	

This is a decision on the Petition To Withdraw Holding of Abandonment Under 37 CFR 1.181(a), received in the United States Patent and Trademark Office (USPTO) on August 5, 2005.

The petition is **GRANTED**.

The application was held abandoned for failure to timely pay the issue fee as required in the NOTICE OF ALLOWANCE AND FEE(S) DUE mailed January 31, 2005, which set a three (3) month statutory period for reply.

The petitioner has demonstrated that Part B - FEE(S) TRANSMITTAL, was successfully and timely filed via facsimile transmission to the USPTO on May 2, 2005, and is in compliance with 37 CFR 1.8(b).

Petitioner also states that the "Applicants inadvertently failed to check the boxes for payment of the issue fee and publication fee and provide the proper Deposit Account Number."

The rules as amended provided a safely mechanism where it is clear that an applicant intended to pay the issue fee. In this regard, 37 CFR 1.311(b)(1) and (b)(2) provides that, where an applicant intends to pay the issue fee by submission of either an incorrect fee or a completed Office-provided issue fee transmittal form (where no issue fee has been submitted), a general authorization to pay fees or a specific authorization to pay the issue, submitted prior to the mailing of a notice of allowance, will be allowed to act as payment of the correct fee.

See para. (b) revised 65 FR 54604 September 8, 2000, effective Nov. 7, 2000; revised 65 FR 57024, Sept. 20, 2000, effective Nov. 29, 2000; revised 69 FR 56481, Sept.21, 2004, effective Sept. 21, 2004

Note: the revision effective Sept. 21, 2004 added the term "such" before "fees" to clarify that the previously file authorization must be an authorization to charge the appropriated fee due to an identified deposit account.

A review of the application file reveals that a previously filed authorized to charge any additional fee to Deposit Account No. 23-0455 was provided in the Response To Notice Of Missing Parts Under 37 CFR 1.53(b), received July 11, 2003. Therefore, in view of the previously filed authorization and since it was clearly applicant's intention to pay the issue fee, the holding of abandonment is hereby withdrawn.

The USPTO financial database indicates that the fees in the amount of $1,700 (issue fee $1,400 and publication fee $300) were charged to Deposit Account 23-0455 on August 8, 2005. The afore-mentioned fees will be properly associated with the Fee(s) Transmittal demonstrated at received on May 2, 3005.

The application will be forwarded to the Publishing Division to be processed into a patent.

Telephone inquires relating to this matter may be directed to the undersigned in the Office of Patent Publication at 703-308-9250.

Thomas E Hawkins

Thomas Hawkins
Paralegal Specialist
Office of the Director
Office of Patent Publication

SPE RESPONSE FOR CERTIFICATE OF CORRECTION

Paper No.: _____

DATE : 4-25-05

TO SPE OF : ART UNIT 3766

SUBJECT : Request for Certificate of Correction for Appl. No.: 10/411891 Patent No.: 7191015

Please respond to this request for a certificate of correction within 7 days.

Please review the requested changes/corrections as shown in the COCIN document(s) in the IFW application image. No new matter should be introduced, nor should the scope or meaning of the claims be changed.

Please check claims

Please complete the response (see below) and forward the completed response to scanning using document code COCX.

Certificates of Correction Branch

703-308-9390 ext. 117

Thank You For Your Assistance

The request for issuing the above-identified correction(s) is hereby:

Note your decision on the appropriate box.

- ☐ **Approved** — All changes apply.
- ☒ **Approved in Part** — Specify below which changes **do not** apply.
- ☐ **Denied** — State the reasons for denial below.

Comments: MODIFICATION TO COL. 15, LINE 44 IS DENIED. CLAIM 27 CANNOT DEPEND FROM CLAIM 30, SINCE IT WOULD NOT "REFER BACK" TO A PREVIOUS CLAIM, AS REQUIRED BY 37 CFR 1.75(c). ALSO, CLAIM 30 CURRENTLY DEPENDS FROM CLAIM 27. MODIFYING CLAIM 27 TO DEPEND FROM CLAIM 30 WOULD BE IMPROPER. THIS WOULD BE A "RACE" CONDITION.

Carl H. Layne — SPE

3766 — Art Unit

UNITED STATES PATENT AND TRADEMARK OFFICE

COMMISSIONER FOR PATENTS
UNITED STATES PATENT AND TRADEMARK OFFICE
P.O. BOX 1450
ALEXANDRIA, VA 22313-1450
www.uspto.gov

JUN - 4 2004

SOLAZYME INC
800 EL CAMINO SUITE 180
MOUNTAIN VIEW CA 94040

In re Application of	:
Harrison Dillon	:
Serial No.: 10/411,910	: PETITION TO MAKE SPECIAL
Filed: April 12, 2003	:
Attorney Docket No.: H2041203-P	:

This is in response to applicants' petition filed May 1, 2003, to make the above-identified application special under the provisions of 37 CFR 1.102(c), based environmental quality and/or conservation of energy. The delay in acting on this petition is regretted, however it was not released from the initial patent examining area until recently.

Applicant petitions on the basis that the invention will enhance the quality of the environment. M.P.E.P. 708.02, Part V, gives guidance in this matter, as follows:

> The Patent and Trademark Office will accord "special" status to all patent applications for inventions which materially enhance the quality of the environment of mankind **by contributing to the restoration or maintenance of the basic life - sustaining natural elements - air, water, and soil.**
>
> All applicants desiring to participate in this program should petition that their applications be accorded "special" status. Such petitions should be accompanied by verified statements under 37 CFR 1.102 by the applicant or assignee or statements by an attorney/agent registered to practice before the PTO ** explaining how the inventions contribute to the restoration or maintenance of one of these life - sustaining elements. No fee is required for such a petition, 37 CFR 1.102(c).

Applicant's claims are directed to a method of evolving hydrogenase genes for the production of hydrogen fuel. However, the guidance highlighted above indicates that the application must contribute to the restoration or maintenance of air, soil or water. It is not seen how production of hydrogen by photosynthesis contributes to the restoration or maintenance of air, soil or water. Further production of hydrogen is not claimed, per se.

With respect to Eneergy, M.P.E.P. 708.02, Part VI gives guidance in this matter, as follows:

> The U.S. Patent and Trademark Office will, on petition, accord "special" status to all patent applications for inventions which materially contribute to (A) the discovery or development of energy resources, or (B) the more efficient utilization and conservation of energy resources. Examples of inventions in category (A) would be developments in fossil fuels (natural gas, coal, and petroleum), hydrogen fuel technologies, nuclear energy, solar energy, etc. Category (B) would include inventions relating to the reduction of energy consumption in combustion systems, industrial equipment, household appliances, etc.
> All applicants desiring to participate in this program should petition that their applications be accorded "special" status. Such petitions should be accompanied by statements under 37 CFR 1.102 by the applicant,

assignee, or an attorney/agent registered to practice before the Office explaining how the invention materially contributes to category (A) or (B) set forth above. No fee is required for such a petition, 37 CFR 1.102(c).

Applicant's claims, as noted, are not directed to reduction of energy consumption (Category B, above) and do not appear to be directed to Category A, the development of energy **resources** (interpreted as natural resources capable of producing a fuel (e.g. crude oil, coal, etc.)). Rather, some of the claims are directed to making a living organism which may be capable of producing amounts of hydrogen above that normally produced and which may be recoverable in quantities sufficient for commercial use. However such technology is not claimed, only the creation of the organism, per se.

Applicant's petition is **DISMISSED**. Any reconsideration of this decision must be made within TWO MONTHS of the mail date thereof.

The application will be acted on in accordance with Office policy.

Should there be any questions with regard to this letter please contact William R. Dixon, Jr. by letter addressed to the Director, Technology Center 1600, PO BOX 1450, ALEXANDRIA, VA 22313-1450, or by telephone at 571-272-0519 or by facsimile transmission to the general Office facsimile number.

William R. Dixon, Jr.
Special Program Examiner
Technology Center 1600

UNITED STATES PATENT AND TRADEMARK OFFICE

COMMISSIONER FOR PATENTS
UNITED STATES PATENT AND TRADEMARK OFFICE
P.O. BOX 1450
ALEXANDRIA, VA 22313-1450
www.uspto.gov

JUL 12 2004

SOLAZYME INC
800 EL CAMINO SUITE 180
MOUNTAIN VIEW CA 94040

In re Application of	:
Harrison Dillon	:
Serial No.: 10/411,910	: PETITION TO MAKE SPECIAL
Filed: April 12, 2003	:
Attorney Docket No.: H2041203-P	:

This is in response to applicant's renewed petition filed June 21, 2004, to make the above-identified application special under the provisions of 37 CFR 1.102(c), based environmental quality and/or conservation of energy.

Applicant petitions on the basis that the invention will enhance the quality of the environment and provides new arguments in respect thereto.

Applicant also petitions on the basis of conservation of energy resources and provides additional arguments with respect thereto.

Applicant's petition is **GRANTED** in view of the new arguments presented.

Should there be any questions with regard to this letter please contact William R. Dixon, Jr. by letter addressed to the Director, Technology Center 1600, PO BOX 1450, ALEXANDRIA, VA 22313-1450, or by telephone at 571-272-0519 or by facsimile transmission to the general Office facsimile number, 703-872-9306.

William R. Dixon, Jr.
Special Program Examiner
Technology Center 1600

UNITED STATES PATENT AND TRADEMARK OFFICE

COMMISSIONER FOR PATENTS
UNITED STATES PATENT AND TRADEMARK OFFICE
P.O. BOX 1450
ALEXANDRIA, VA 22313-1450
www.uspto.gov

Paper No. 6

HALE AND DORR, LLP
60 STATE STREET
BOSTON MA 02109

COPY MAILED

JAN 23 2004

OFFICE OF PETITIONS

In re Application of	:
Kowalczyk, Lei, Schure, and Dunkle	: DECISION ACCORDING STATUS
Application No. 10/411,929	: UNDER 37 CFR 1.47(a)
Filed: 11 April, 2003	:
Atty Docket No. 111021.137US2	:

This is in response to the petition filed under 37 CFR 1.47(a) on 23 December, 2003.

The petition is **GRANTED**.

Petitioners have shown that the non-signing inventor could not be located. Specifically, petitioners have shown that a copy of the application papers were sent to the last known address of the non-signing inventor, but were returned as undeliverable. Furthermore, petitioners have shown that despite diligent efforts, the non-signing inventor could not be located.

The above-identified application and papers have been reviewed and found in compliance with 37 CFR 1.47(a). This application is hereby accorded Rule 1.47(a) status.

As provided in Rule 1.47(c), this Office will forward notice of this application's filing to the non-signing inventor at the address given in the Declaration. Notice of the filing of this application will also be published in the Official Gazette.

After this decision is mailed, the application will be forwarded the Office of Initial Patent Examination for further processing.

Telephone inquiries related to this decision should be directed to the undersigned at 703-308-6918.

D Wood

Douglas I. Wood
Senior Petitions Attorney
Office of Petitions

UNITED STATES PATENT AND TRADEMARK OFFICE

Commissioner for Patents
United States Patent and Trademark Office
P.O. Box 1450
Alexandria, VA 22313-1450
www.uspto.gov

DONALD HILLIARD
P.O. BOX 2169
EL GRANADA, CA 94018-2169

COPY MAILED

NOV 27 2007

OFFICE OF PETITIONS

In re Application of	:	
Hilliard, Donald Bennett	:	
Application No. 10/411,938	:	DECISION ON PETITION
Filed: April 10, 2003	:	
Title: SOLID OXIDE ELECTROLYTIC DEVICE	:	

This is a decision on the petition under 37 C.F.R. § 1.137(b), filed October 29, 2007, to revive the above-identified application.

The petition is **DISMISSED**.

Any request for reconsideration must be submitted within TWO (2) MONTHS from the mail date of this decision. No further petition fee is required for the request. Extensions of time under 37 CFR 1.136(a) are permitted. The reconsideration request should include a cover letter entitled "Renewed Petition under 37 CFR 1.137(b)." This is **not** a final agency action within the meaning of 5 U.S.C. § 704.

A grantable petition under 37 CFR 1.137(b) must be accompanied by:
(1) the required reply,[1]
(2) the petition fee,
(3) a statement that the entire delay in filing the required reply from the due date for the reply until the filing of a grantable petition pursuant to 37 CFR 1.137(b) was unintentional, and
(4) a terminal disclaimer and fee if the application was filed on or before June 8, 1995 or if the application is a design application.

Where there is a question as to whether either the abandonment or the delay in filing a petition under 37 CFR 1.137 was unintentional, the Commissioner may require additional information.[2]

The instant petition lacks item(s) (2). Although petitioner states a $750.00 check was submitted for payment of the petition fee, only $720.00 was collected by the Office of Finance. Further,

---

[1] In a nonprovisional application abandoned for failure to prosecute, the required reply may be met by the filing of a continuing application. In an application or patent, abandoned or lapsed for failure to pay the issue fee or any portion thereof, the required reply must be the payment of the issue fee or any outstanding balance thereof.

[2] See MPEP 711.03(c)(III)(C) and (D).

the petition fee was increased to $770.00 effective September 30, 2007. Accordingly, an additional $50.00 is required for revival.

Further correspondence with respect to this matter should be addressed as follows:

By mail: Mail Stop PETITIONS
Commissioner for Patents
Post Office Box 1450
Alexandria, VA 22313-1450

By hand: Customer Window located at:

U.S. Patent and Trademark Office
Customer Service Window Randolph Building
401 Dulany Street
Alexandria, VA 22314

By fax: (571) 273-8300
ATTN: Office of Petitions

Any questions concerning this matter may be directed to the undersigned at (571) 272-3206.

Liana Walsh
Petitions Examiner
Office of Petitions

UNITED STATES PATENT AND TRADEMARK OFFICE

Commissioner for Patents
United States Patent and Trademark Office
P.O. Box 1450
Alexandria, VA 22313-1450
www.uspto.gov

DONALD HILLIARD
P.O. BOX 2169
EL GRANADA CA 94018-2169

COPY MAILED

MAY 01 2009

OFFICE OF PETITIONS

In re Application of	:	
Hilliard, Donald Bennett	:	
Application No. 10/411,938	:	ON PETITION
Filed: April 10, 2003	:	
Title: Solid Oxide Electrolytic Device	:	

This is a decision on the renewed petition under 37 C.F.R. § 1.137(b), filed January 23, 2008, to revive the above-identified application.

The petition is **GRANTED**.

The petition now satisfies the requirements of 37 CFR 1.137(b).

The above-identified application is being revived solely for purposes of continuity. As continuity has been established by this decision reviving the above-identified application, the above-identified application is again abandoned in favor of continuing application No. 11/980,242, filed October 29, 2007.

Telephone inquiries concerning this decision should be directed to the undersigned at (571) 272-3206.

Liana Walsh
Petitions Examiner
Office of Petitions

UNITED STATES PATENT AND TRADEMARK OFFICE

UNITED STATES DEPARTMENT OF COMMERCE
United States Patent and Trademark Office
Address: COMMISSIONER FOR PATENTS
P.O. Box 1450
Alexandria, Virginia 22313-1450
www.uspto.gov

BLAKELY SOKOLOFF TAYLOR & ZAFMAN LLP
1279 OAKMEAD PARKWAY
SUNNYVALE, CA 94085-4040

Mail Date: 04/21/2010

Applicant	: Muhammad Raghib Hussain	: DECISION ON REQUEST FOR
Patent Number	: 7657933	: RECALCULATION of PATENT
Issue Date	: 02/02/2010	: TERM ADJUSTMENT IN VIEW
Appliction No	: 10/411,943	: OF WYETH AND NOTICE OF INTENT TO
Filed	: 04/12/2003	: ISSUE CERTIFICATE OF CORRECTION
		:

The Request for Recalculation is **GRANTED** to the extent indicated.

The patent term adjustment has been determined to be **658** days. The USPTO will *sua sponte* issue a certificate of correction reflecting the amount of PTA days determined by the recalculation.

Prior to the issuance of the certificate of correction, the USPTO will afford patentee an opportunity to be heard and request reconsideration. Accordingly, patentee has **one month or thirty (30) days**, whichever is longer, to file a request for reconsideration of this patent term adjustment calculation. See 35 U.S.C. 154(b)(3)(B)(ii) and 37 CFR 1.322(a)(4). No extensions of time will be granted under 37 CFR 1.136.

Patentee should use document code PET.OP if electronically filing a request for reconsideration of this patent term adjustment calculation. The patentee must also include the information required by 37 CFR 1.705(b)(2) and the fee required by 37 CFR 1.18(e). If patentee does not file a timely request for reconsideration of this patent term adjustment calculation including the information required by 37 CFR 1.705(b)(2) and the fee required by 37 CFR 1.18(e), the USPTO will issue a certificate of correction reflecting the PTA determination noted above.

Patentee should be aware that in order to preserve the right to review in the United States District Court for the District of Columbia of the USPTO patent term adjustment determination, patentee must ensure that he or she also take the steps required under 35 U.S.C. 154(b)(4)(A) in a timely manner. Nothing in the request for recalculation should be construed as providing an alternative time frame for commencing a civil action under 35 U.S.C. 154(b)(4)(A).

Any questions concerning this decision should be directed to the Office of Patent Legal Administration at 571-272-7702.

UNITED STATES PATENT AND TRADEMARK OFFICE

Commissioner for Patents
United States Patent and Trademark Office
P.O. Box 1450
Alexandria, VA 22313-1450
www.uspto.gov

BLAKELY, SOKOLOFF, TAYLOR & ZAFMAN
SEVENTH FLOOR
12400 WILSHIRE BOULEVARD
LOS ANGELES CA 90025-1030

COPY MAILED

APR 20 2005

OFFICE OF PETITIONS

In re Application of	:
Muhammad Raghib Hussain et al	:DECISION GRANTING PETITION
Application No. 10/411,944	:UNDER 37 CFR 1.137(b)
Filed: April 12, 2003	:
Attorney Docket No. 5655P018	:

This is a decision on the petition, filed November 18, 2004, which is being treated as a petition under 37 CFR 1.137(b) to revive the instant nonprovisional application for failure to timely notify the U.S. Patent and Trademark (USPTO) of the filing of an application in a foreign country, or under a multinational treaty that requires publication of applications eighteen months after filing. *See* 37 CFR 1.137(f).

The petition is **GRANTED**.

Petitioner states that the instant nonprovisional application is the subject of an application filed in a foreign country on April 7, 2004. However, the USPTO was unintentionally not notified of this filing within 45 days subsequent to the filing of the subject application in a foreign country.

Petitioner contends that "the USPTO has misinterpreted the requirements of 35 U.S.C. § 122, causing the needless filing of the subject Petition, and respectfully requests a refund under 37 CFR § 1.26 for the fees under 37 CFR § 1.17(m) mistakenly required to be paid."

The petition fails to state with any specificity as to how the USPTO misinterpreted the rules.

However, petitioner's attention is directed to 35 U.S.C. 122(b)(2)(B) which states, in pertinent part:

> (i) If an applicant makes a request upon filing, certifying that the invention disclosed in the application has not and will not be the subject of an application filed in another country, or under a multilateral international agreement, that requires publication of applications 18 months after filing, the application shall not be published as provided in paragraph (1).
>
> (ii) **An applicant may rescind a request made under clause (i) at any time**.
>
> (iii) An applicant who has made a request under clause (i) but who subsequently files, in a foreign country or under a multilateral international agreement specified in clause (i), an application directed to the invention disclosed in the application filed in the Patent and Trademark Office, shall notify the Director of such filing not later than 45 days after the date of the filing of such foreign or international application. **A failure of the applicant to provide such notice within the prescribed period shall result in the application being regarded as abandoned**, unless it is shown to the satisfaction of the Director that the delay in submitting the notice was unintentional.
>
> (iv) If an applicant rescinds a request made under clause (i) **or** notifies the Director that an application was filed in a foreign country or under a multilateral international agreement specified in clause (i), the application shall be published in accordance with the provisions of paragraph (1) on or as soon as is practical after the date that is specified in clause (i).

The Congressional record explains that, if applicant has requested nonpublication because the application will not be filed "in a foreign country with a publication requirement, subparagraph (B)(iii) imposes a duty on the applicant to notify the Director of this fact. An unexcused failure to notify the Director will result in abandonment of the application." See 145'Cong. Rec. S14,718 (November 17, 1999).

A review of the file record discloses that this application was filed with a proper nonpublication request. As noted above, on April 7, 2004, applicant filed a counterpart international application relating to the subject matter of the above-identified application. Notification of the filing of the counterpart international application as required by 35 U.S.C. 122(b)(2)(B)(iii) and 37 CFR 1.213(c) was provided at the time of filing of the instant petition.

The American Inventors Protection Act of 1999 required publication of certain patent applications filed on or after November 29, 2000, and allowed applicants to request nonpublication if the invention disclosed in the application had not been and would not be the subject of an application filed in another country, or pursuant to an international agreement that required publication of patent applications eighteen months after filing. The Act permitted applicants to rescind the nonpublication request at any time, but also required applicants to notify the USPTO if they had made a nonpublication request (with the certification that the invention disclosed in the application had not been and would not be "foreign filed," and then did foreign file). If an applicant requested nonpublication, and then did not provide notice of foreign filing no later than 45 days of the foreign filing, the statute provides that the application would be regarded as abandoned. An applicant who rescinded a nonpublication request after filing the U.S. application but before foreign filing the application is not understood to be required to also file a notice of foreign filing, since the rescinding of the nonpublication request prior to foreign filing would nullify the nonpublication request (if received in the USPTO prior to the date of foreign filing).

In view of the above and as the notification to the USPTO of the foreign filing on April 7, 2004 of the counterpart international application did not occur within 45 days of such filing, this application is regarded as abandoned as of midnight on May 22, 2004 pursuant to 35 U.S.C. § 122(b)(2)(B)(iii) and 37 CFR 1.213(c). Therefore, the appropriate relief from the abandoned status of this application is the filing of a petition under 37 CFR 1.137(b).

A petition to revive an application abandoned pursuant to 35 U.S.C. § 122(b)(2)(B)(iii) for failure to notify the USPTO of a foreign filing must be accompanied by:

> (1) the reply which is met by the notification of such filing in a foreign country or under a multinational treaty;

(2) the petition fee as set forth in 37 CFR 1.17(m); and

(3) a statement that the entire delay in filing the required reply from the due date of the reply until the filing of a grantable petition was unintentional.

The instant petition has been found to be in compliance with 37 CFR 1.137(b). Accordingly, the failure to timely notify the Office of a foreign or international filing within 45 days after the date of filing of such foreign or international application as provided by 35 U.S.C. § 122(b)(2)(B)(iii) and 37 CFR 1.213(c) is accepted as having been unintentionally delayed.

The rules and statutory provisions governing the operations of the U.S. Patent and Trademark Office require payment of a fee on filing each petition. 35 U.S.C. § 41(c)(7). Therefore, the $1,370 petition fee submitted is not refundable.

The previous Request and Certification under 35 U.S.C. § 122(b)(2)(B)(i) has been rescinded. A Notice Regarding Rescission of Nonpublication Request was mailed on December 6, 2004.

Any inquiries concerning this decision may be directed to the undersigned at (571) 272-3208.

This application is being forwarded to Technology Center Art Unit 2132 for examination in due course.

Karen Creasy

Karen Creasy
Petitions Examiner
Office of Petitions
Office of the Deputy Commissioner
for Patent Examination Policy

UNITED STATES DEPARTMENT OF COMMERCE
Patent and Trademark Office
ASSISTANT SECRETARY AND COMMISSIONER OF PATENTS AND TRADEMARKS
Washington, D.C. 20231

Blakely Sokoloff Taylor & Zafman
1279 Oakmead Parkway
Sunnyvale, CA 94085-4050

MAILED

AUG 2 1 2008

Technology Center 2100

In re Application of
Mahammad Hussain
Application No. 10/411,944
Filed: April 12, 2003
For: Apparatus and Method for Allocating Resources within a Security Processing Architecture using Multiple Queuing Mechanisms

DECISION *SUA SPONTE* WITHDRAWING HOLDING OF ABANDONMENT

This is a decision, *sua sponte*, withdrawing the holding of abandonment of the above-identified application.

An Office action was mailed on September 20, 2007 setting a three-month shortened statutory period for response. In the apparent absence of a response, the application was held abandoned and a Notice of Abandonment was mailed on April 2, 2008.

Although no petition or request to withdraw the holding of abandonment in this application has been filed, the Notice of Abandonment is hereby vacated, the holding of abandonment withdrawn and the application restored to pending status in view of the fact that a response, and, an Information Disclosure Statement, was filed on December 26, 2007 and has recently been found mislabeled in the middle of a NPL document in the application file. The response was submitted with a Certificate of Mailing bearing a deposit date of December 20, 2007.

The application file is being forwarded to the group support staff for entry of the response. From there, the application file will be forwarded to the examiner for further examination.

Please contact Tod Swann with any questions regarding this decision at (571) 272-3612.

on behalf of
Andrew Hirshfeld, Director
Technology Center 2100

UNITED STATES PATENT AND TRADEMARK OFFICE

UNITED STATES DEPARTMENT OF COMMERCE
United States Patent and Trademark Office
Address: COMMISSIONER FOR PATENTS
P.O. Box 1450
Alexandria, Virginia 22313-1450
www.uspto.gov

BLAKELY SOKOLOFF TAYLOR & ZAFMAN LLP
1279 OAKMEAD PARKWAY
SUNNYVALE, CA 94085-4040

Mail Date: 04/21/2010

Applicant	: Muhammad Raghib Hussain	: DECISION ON REQUEST FOR
Patent Number	: 7661130	: RECALCULATION of PATENT
Issue Date	: 02/09/2010	: TERM ADJUSTMENT IN VIEW
Appliction No	: 10/411,944	: OF WYETH AND NOTICE OF INTENT TO
Filed	: 04/12/2003	: ISSUE CERTIFICATE OF CORRECTION
		:

The Request for Recalculation is **GRANTED** to the extent indicated.

The patent term adjustment has been determined to be **1901** days. The USPTO will *sua sponte* issue a certificate of correction reflecting the amount of PTA days determined by the recalculation.

Prior to the issuance of the certificate of correction, the USPTO will afford patentee an opportunity to be heard and request reconsideration. Accordingly, patentee has **one month or thirty (30) days**, whichever is longer, to file a request for reconsideration of this patent term adjustment calculation. See 35 U.S.C. 154(b)(3)(B)(ii) and 37 CFR 1.322(a)(4). No extensions of time will be granted under 37 CFR 1.136.

Patentee should use document code PET.OP if electronically filing a request for reconsideration of this patent term adjustment calculation. The patentee must also include the information required by 37 CFR 1.705(b)(2) and the fee required by 37 CFR 1.18(e). If patentee does not file a timely request for reconsideration of this patent term adjustment calculation including the information required by 37 CFR 1.705(b)(2) and the fee required by 37 CFR 1.18(e), the USPTO will issue a certificate of correction reflecting the PTA determination noted above.

Patentee should be aware that in order to preserve the right to review in the United States District Court for the District of Columbia of the USPTO patent term adjustment determination, patentee must ensure that he or she also take the steps required under 35 U.S.C. 154(b)(4)(A) in a timely manner. Nothing in the request for recalculation should be construed as providing an alternative time frame for commencing a civil action under 35 U.S.C. 154(b)(4)(A).

Any questions concerning this decision should be directed to the Office of Patent Legal Administration at 571-272-7702.

UNITED STATES PATENT AND TRADEMARK OFFICE

Commissioner for Patents
United States Patent and Trademark Office
P.O. Box 1450
Alexandria, VA 22313-1450
www.uspto.gov

WAGNER, MURABITO & HAO LLP
TWO NORTH MARKET STREET, THIRD FLOOR
SAN JOSE CA 95113

COPY MAILED

MAY 0 4 2006

OFFICE OF PETITIONS

In re Application of :
William N. Schnaitter :
Application No. 10/411,955 : ON PETITION
Filed: April 10, 2003 :
Attorney Docket No.: TRAN-P085 :

This is a decision on the petition filed March 28, 2006 under 37 CFR 1.137(b),[1] to revive the above-identified application.

The petition is **GRANTED**.

This application became abandoned for failure to timely reply to the non-Final Office Action mailed September 13, 2005. A shortened statutory period of three months was set for replying to the non-Final Office Action. No extensions of time having been requested, this application became abandoned December 14, 2005. The instant petition and this decision precede the mailing of the Notice of Abandonment.

This matter is being referred to Technology Center 2859 for appropriate action on the amendment filed March 28, 2006.

Telephone inquiries concerning this matter should be directed to the undersigned Petitions Attorney at (571) 272-3212.

Patricia Faison-Ball
Senior Petitions Attorney
Office of Petitions

---

[1]Effective December 1, 1997, the provisions of 37 CFR 1.137(b) now provide that where the delay in reply was unintentional, a petition may be filed to revive an abandoned application or a lapsed patent pursuant to 37 CFR 1.137(b). A grantable petition filed under the provisions of 37 CFR 1.137(b) must be accompanied by:

(1) the required reply, unless previously filed. In a nonprovisional application abandoned for failure to prosecute, the required reply may be met by the filing of a continuing application. In a nonprovisional application filed on or after June 8, 1995, and abandoned for failure to prosecute, the required reply may also be met by the filing of a request for continued examination in compliance with § 1.114. In an application or patent, abandoned or lapsed for failure to pay the issue fee or any portion thereof, the required reply must be the payment of the issue fee or any outstanding balance thereof. In an application abandoned for failure to pay the publication fee, the required reply must include payment of the publication fee.

(2) the petition fee as set forth in 37 CFR 1.17(m);

(3) a statement that the entire delay in filing the required reply from the due date for the reply until the filing of a grantable petition pursuant to 37 CFR 1.137(b) was unintentional. The Commissioner may required additional information where there is a question whether the delay was unintentional; and

(4) any terminal disclaimer (and fee as set forth in 37 CFR 1.20(d)) required pursuant to 37 CFR 1.137(c)).

UNITED STATES PATENT AND TRADEMARK OFFICE

COMMISSIONER FOR PATENTS
UNITED STATES PATENT AND TRADEMARK OFFICE
P.O. BOX 1450
ALEXANDRIA, VA 22313-1450
WWW.USPTO.GOV

Paper No. None

HUNTLEY & ASSOCIATES
1105 NORTH MARKET STREET
P.O. BOX 948
WILMINGTON DE 19899-0948

COPY MAILED
AUG 1 8 2006
OFFICE OF PETITIONS

In re Application of :
Carl P. Kernander et al. :
Application No. 10/411,961 :
Filed: April 11, 2003 :
Attorney Docket Number: Madico-2 :
Title: BRIGHT WHITE PROTECTIVE LAMINATES :

DECISION ON PETITION UNDER 37 C.F.R. §1.137(A)

This is a decision on the petition filed June 13, 2006, under 37 C.F.R. §1.137(a)[1], to revive the above-identified application.

BACKGROUND

The above-identified application became abandoned for failure to reply within the meaning of 37 C.F.R. §1.113 in a timely manner to the final Office action mailed August 12, 2005, which set a shortened statutory period for reply of three months. No extensions of time under the provisions of 37 C.F.R. §1.136(a) were obtained, and no further responses were received. Accordingly, the above-identified application became abandoned

1 A grantable petition pursuant to 37 C.F.R. §1.137(a) must be accompanied by:

(1) The reply required to the outstanding Office action or notice, unless previously filed;
(2) The petition fee as set forth in 37 C.F.R. §1.17(l);
(3) A showing to the Commissioner that the entire delay in filing the required reply from the due date for the reply until the filing of a grantable petition was unavoidable;
(4) Any terminal disclaimer (and fee as set forth in 37 C.F.R. §1.20(d)) required pursuant to paragraph (d) of this section.

on November 13, 2005. A notice of abandonment was mailed on March 6, 2006.

A discussion follows.

The Commissioner is responsible for determining the standard for unavoidable delay and for applying that standard.

"In the specialized field of patent law, . . . the Commissioner of Patent and Trademarks is primarily responsible for the application and enforcement of the various narrow and technical statutory and regulatory provisions. The Commissioner's interpretation of those provisions is entitled to considerable deference."[2]

"[T]he Commissioner's discretion cannot remain wholly uncontrolled, if the facts **clearly** demonstrate that the applicant's delay in prosecuting the application was unavoidable, and that the Commissioner's adverse determination lacked **any** basis in reason or common sense."[3]

"The court's review of a Commissioner's decision is 'limited, however, to a determination of whether the agency finding was arbitrary, capricious, an abuse of discretion, or otherwise not in accordance with the law.'"[4]

"The scope of review under the arbitrary and capricious standard is narrow and a court is not to substitute its judgment for that of the agency."[5]

---

2 Rydeen v. Quigg, 748 F.Supp. 900, 904, 16 U.S.P.Q.2d (BNA) 1876 (D.D.C. 1990), aff'd without opinion (Rule 36), 937 F.2d 623 (Fed. Cir.1991) (citing Morganroth v. Quigg, 885 F.2d 843, 848, 12 U.S.P.Q.2d (BNA) 1125 (Fed. Cir. 1989); Ethicon, Inc. v. Quigg 849 F.2d 1422, 7 U.S.P.Q.2d (BNA 1152 (Fed. Cir. 1988) ("an agency's interpretation of a statute it administers is entitled to deference"); see also Chevron U.S.A. Inc. v. Natural Resources Defence Council, Inc., 467 U.S. 837, 844, 81 L. Ed. 694, 104 S. Ct. 2778 (1984) ("if the statute is silent or ambiguous with respect to the specific issue, the question for the court is whether the agency's answer is based on a permissible construction of the statute.")

3 Commissariat A L'Energie Atomique et al. v. Watson, 274 F.2d 594, 597, 124 U.S.P.Q. (BNA) 126 (D.C. Cir. 1960) (emphasis added).

4 Haines v. Quigg, 673 F. Supp. 314, 316, 5 U.S.P.Q.2d (BNA) 1130 (N.D. Ind. 1987) (citing Camp v. Pitts, 411 U.S. 138, 93 S. Ct.1241, 1244 (1973) (citing 5 U.S.C. 706 (2)(A)); Beerly v. Dept. of Treasury, 768 F.2d 942, 945 (7th Cir. 1985); Smith v. Mossinghoff, 217 U.S. App. D.C. 27, 671 F.2d 533, 538 (D.C. Cir.1982)).

5 Ray v. Lehman, 55 F.3d 606, 608, 34 U.S.P.Q2d (BNA) 1786 (Fed. Cir. 1995) (citing Motor Vehicles Mfrs. Ass'n v. State Farm Mut. Auto. Ins. Co., 463 U.S. 29, 43, 77 L.Ed.2d 443, 103 S. Ct. 2856 (1983)).

THE STANDARD

The burden of showing the cause of the delay is on the person seeking to revive the application[6].

"[T]he question of whether an applicant's delay in prosecuting an application was unavoidable must be decided on a case-by-case basis, taking all of the facts and circumstances into account."[7]

The Office must rely on the actions or inactions of duly authorized and voluntarily chosen representatives of the applicant, and the applicant is bound by the consequences of those actions or inactions[8]. Specifically, petitioner's delay caused by the mistakes or negligence of his voluntarily chosen representative does not constitute unavoidable delay within the meaning of 35 USC 133[9].

The actions of the attorney are imputed to the client, for when a petitioner voluntarily chooses an attorney to represent him, the petitioner cannot later distance himself from this attorney, so as to avoid the repercussions of the actions or inactions of this selected representative, for clients are bound by the acts of their lawyers/agents, and constructively possess "notice of all facts, notice of which can be charged upon the attorney[10]."

Courts hesitate to punish a client for its lawyer's gross negligence, especially when the lawyer affirmatively misled the client," but "if the client freely chooses counsel, it should be bound to counsel's actions[11]."

In addition, decisions on revival are made on a "case-by-case basis, taking all the facts and circumstances into account[12]."

RELEVANT LAW

35 U.S.C. 133: Time for prosecuting application.

Upon failure of the applicant to prosecute the application within six months after any action therein, of which notice has been given or mailed to the applicant, or within such shorter time, not less than

---

6 Id.

7 See In re Sivertz, 227 USPQ 255, 256 (Comm'r Pat. 1985).

8 Link v. Wabash, 370 U.S. 626, 633-634 (1962).
9 Haines, 673 F.Supp. at 316-17, 5 U.S.P.Q.2d at 1131-32; Smith v. Diamond, 209 USPQ 1091 (D.D.C. 1981); Potter v. Dann, 201 USPQ 574 (D.D.C. 1978); Ex parte Murray, 1891 Dec. Comm'r Pat. 103, 131 (Comm'r Pat. 1891).
10 Link at 633-634.
11 Inryco, Inc. v. Metropolitan Engineering Co., Inc., 708 F.2d 1225, 1233 (7th Cir. 1983). See also, Wei v. State of Hawaii, 763 F.2d 370, 372 (9th Cir. 1985); LeBlanc v. I.N.S., 715 F.2d 685, 694 (1st Cir. 1983).
12 Smith v. Mossinghoff, 671 F.2d at 538; 213 USPQ at 982.

thirty days, as fixed by the Director in such action, the application shall be regarded as abandoned by the parties thereto, unless it be shown to the satisfaction of the Director that such delay was unavoidable.

(Amended Nov. 29, 1999, Public Law 106-113, sec. 1000(a)(9), 113 Stat. 1501A-582 (S. 1948 sec. 4732(a)(10)(A)).)

ANALYSIS

With the present petition, Petitioner has submitted the petition fee[13] and a continuing application (which has been assigned a serial number of 11/451,574). No terminal disclaimer is required.

Petitioner has failed to establish that the entire delay in filing the required reply from the due date for the reply until the filing of a grantable petition was unavoidable.

The final Office action was mailed on August 12, 2005, and set a shortened statutory period for reply of three months. As such, Petitioner had until November 12, 2005 to submit a reply, without the need to petition for an extension of time. Petitioner has indicated that on November 13, 2005, he was hospitalized as the result of being in an automobile accident[14].

First, Petitioner has asserted that he was in an automobile accident, and that he was incapacitated during his four-day hospital stay as well as during a period after which, due to an ongoing recovery from the same. In order for the period of delay to have been unavoidable, Petitioner must have been incapacitated for the entire seven-month period of delay from November 13, 2005 until June 13, 2006, to the point that submitting a continuation application was simply not possible. Petitioner will need to submit medical documentation to substantiate this allegation.

Secondly, *assuming arguendo* that Petitioner was unavoidably prevented from preparing and submitting a response due to a seven-month period of incapacitation, it is not clear why this temporary incapacitation prevented the submission of the response until June of the following year. Petitioner has set forth that "a continuation-in-part was being discussed with the

---

13 Petitioner has submitted $100, when the amount due is $250. The deficiency has been charged to his Deposit Account, as authorized in the petition.

14 Petitioner has not indicated when this automobile accident occurred. The Office will presume that the automobile accident occurred on this same day.

inventors at the time of the accident." What prevented another party from presenting this submission on behalf of these clients?

It does not appear that Petitioner is a solo practitioner. Petitioner has indicated that "key personnel, including the firm's paralegal and both associates" left the firm earlier in 2005. However it is noted that there is another attorney who is presently of record and associated with the present application: Mr. Gomez. What prevented this individual from handling Petitioner's matters during this period of incapacitation? Was there anyone else at the firm who could have done the same?. Did anyone take care of Petitioner's professional affairs while he was incapacitated, or was his entire docket placed on hold until his return?

Moreover, Petitioner has asserted that "having to consult with inventors at a remote location" further added to the delay. The declaration shows that these three inventors reside in New Hampshire, Delaware, and Massachusetts; three locations which do not seem particularly remote from Petitioner's office in Delaware. Petitioner will need to clarify this statement, and will need to explain why in this age of telephones, facsimile machines, and electronic methods of communication, the fact that the inventors reside in different states contributed to the delay.

CONCLUSION

Petitioner has not established that the entire period of delay was unavoidable. As such, the present petition must be **DISMISSED**.

Any reply must be submitted within **TWO (2) MONTHS** from the mail date of this decision. Extensions of time under 37 C.F.R. §1.136(a) are permitted. The reply should include a cover letter entitled "Renewed Petition Under 37 C.F.R. 1.137(a)". This is not a final agency action within the meaning of 5 U.S.C 704.

The renewed petition should indicate in a prominent manner that the attorney handling this matter is Paul Shanoski, may be submitted by mail[15], hand-delivery[16], or facsimile[17], and should address the issues which have been discussed above.

---

15 Mail Stop Petition, Commissioner for Patents, United States Patent and Trademark Office, P.O. Box 1450, Alexandria, VA, 22313-1450.

Alternatively, Petitioner may wish to consider the submission of a petition under 37 C.F.R. §1.137(b).

Telephone inquiries regarding *this decision* should be directed to the undersigned at (571) 272-3225[18]. All other inquiries concerning examination procedures or status of the application should be directed to the Technology Center.

Paul Shanoski
Senior Attorney
Office of Petitions
United States Patent and Trademark Office

---

16 Customer Window, Randolph Building, 401 Dulaney Street, Alexandria, VA, 22314.
17 (571) 273-8300- please note this is a central facsimile number.
18 Petitioner will note that all practice before the Office should be in writing, and the action of the Office will be based exclusively on the written record in the Office. See 37 C.F.R. §1.2. As such, Petitioner is reminded that no telephone discussion may be controlling or considered authority for Petitioner's further action(s).

UNITED STATES PATENT AND TRADEMARK OFFICE

COMMISSIONER FOR PATENTS
UNITED STATES PATENT AND TRADEMARK OFFICE
P.O. BOX 1450
ALEXANDRIA, VA 22313-1450
WWW.USPTO.GOV

Paper No. None

HUNTLEY & ASSOCIATES
1105 NORTH MARKET STREET
P.O. BOX 948
WILMINGTON DE 19899-0948

COPY MAILED
NOV 17 2006
OFFICE OF PETITIONS

In re Application of Carl P. Kernander et al. Application No. 10/411,961 Filed: April 11, 2003 Attorney Docket Number: Madico-2 Title: BRIGHT WHITE PROTECTIVE LAMINATES	DECISION ON PETITION UNDER 37 C.F.R. §1.137(B)

This is a decision on the petition filed on October 19, 2006, pursuant to 37 C.F.R. §1.137(b)[1], to revive the above-identified application.

Both the petition fee and a one-month extension of time have been charged to Petitioner's deposit account, as authorized in the petition.

The above-identified application became abandoned for failure to reply within the meaning of 37 C.F.R. §1.113 in a timely manner to the final Office action mailed August 12, 2005, which set a shortened statutory period for reply of three months. No extensions of time under the provisions of 37 C.F.R. §1.136(a)

---

1 A grantable petition pursuant to 37 C.F.R. 1.137(b) must be accompanied by:
(1) The reply required to the outstanding Office action or notice, unless previously filed;
(2) The petition fee as set forth in § 1.17(m);
(3) A statement that the entire delay in filing the required reply from the due date for the reply until the filing of a grantable petition pursuant to this paragraph was unintentional. The Commissioner may require additional information where there is a question whether the delay was unintentional, and;
(4) Any terminal disclaimer (and fee as set forth in § 1.20(d)) required pursuant to paragraph (d) of this section.

Copied from 10411964 on 12/07/2006

were obtained, and no further responses were received. Accordingly, the above-identified application became abandoned on November 13, 2005. A notice of abandonment was mailed on March 6, 2006.

A petition pursuant to 37 C.F.R. §1.137(a) was filed on June 13, 2006, along with a continuing application (which has been assigned a serial number of 11/451,574). This petition was dismissed via the mailing of a decision on August 18, 2006.

37 C.F.R. §1.137(b)(3) requires a statement that the entire delay in filing the required reply from the due date for the reply until the filing of a grantable petition pursuant to 37 C.F.R. §1.137(b) was unintentional. Since the statement contained in the instant petition varies from the language required by 37 C.F.R. §1.137(b)(3), the statement contained in the instant petition is being construed as the statement required by 37 C.F.R. §1.137(b)(3) and petitioner must notify the Office if this is not a correct interpretation of the statement contained in the instant petition.

With the present petition, Petitioner has submitted the petition fee as well as a statement which is being construed as the proper statement of unintentional delay. A terminal disclaimer is not required.

As such, the petition is **GRANTED**.

Since this application is being revived for purposes of continuity only and since continuity has been established by this decision reviving the application, the application is again abandoned in favor of continuing Application No. 11/451,574.

It is noted that Petitioner has requested that the previously paid fee associated with the filing of the petition pursuant to 37 C.F.R. §1.137(a) be credited to his Deposit Account. The Office will not refund this fee, as the petition was not necessitated by any error on the part of the Office. Furthermore, the rules and statutory provisions governing the operations of the US Patent and Trademark Office require payment of a fee on filing each petition[2].

2 35 USC §41(a)(7).

Copied from 10411964 on 12/07/2006

Telephone inquiries regarding *this decision* should be directed to the undersigned at (571) 272-3225[3]. All other inquiries concerning examination procedures or status of the application should be directed to the Technology Center.

Paul Shanoski
Senior Attorney
Office of Petitions
United States Patent and Trademark Office

3 Petitioner will note that all practice before the Office should be in writing, and the action of the Office will be based exclusively on the written record in the Office. See 37 C.F.R. §1.2. As such, Petitioner is reminded that no telephone discussion may be controlling or considered authority for Petitioner's further action(s).

Copied from 10411964 on 12/07/2006

UNITED STATES PATENT AND TRADEMARK OFFICE

Commissioner for Patents
United States Patent and Trademark Office
P.O. Box 1450
Alexandria, VA 22313-1450
www.uspto.gov

AGILENT TECHNOLOGIES, INC.
5301 STEVENS CREEK BOULEVARD
SANTA CLARA, CA 95051-720

COPY MAILED

MAR 03 2008

In re Application of	:	
REZAKHANY, Saed	:	
Application No. 10/411,965	:	DECISION ON PETITION
Filed: April 10, 2003	:	TO WITHDRAW
Attorney Docket No.	:	FROM RECORD
	:	

This is a decision on the Request to Withdraw as attorney or agent under 37 C.F.R. § 1.36(b) or 37 C.F.R. § 10.40 filed August 21, 2007 and re-submitted November 7, 2007.

The request is **NOT APPROVED**.

A review of the file record indicates that John F. Brady of Agilent Technologies, Inc does not have power of attorney in this patent application nor is there any statement or evidence of record of employment in or otherwise being engaged in the proceedings in this patent application. Accordingly, the request to withdraw under 37 C.F.R. § 1.36(b) is not applicable.

All future communications from the Office will continue to be directed to the below-listed address until otherwise properly notified by the applicant.

Telephone inquires concerning this decision should be directed to the undersigned at 571-272-7253.

Monica A. Graves
Petitions Examiner
Office of Petitions

cc: **FOOTHILL LAW GROUP**
777 N. FIRST STREET, SUITE 325
SAN JOSE CA 95112

UNITED STATES PATENT AND TRADEMARK OFFICE

Commissioner for Patents
United States Patent and Trademark Office
P.O. Box 1450
Alexandria, VA 22313-1450
www.uspto.gov

J. MICHAEL MARTINEZ de ANDINO, ESQ.
HUNTON & WILLIAMS
RIVERFRONT PLAZA, EAST TOWER
951 EAST BYRD STREET
RICHMOND, VA 23219-4074

COPY MAILED
SEP 0 8 2004
OFFICE OF PETITIONS

In re Application of	:
Phillip Craig Graves et al	:
Application No. 10/411,971	: DECISION GRANTING PETITION
Filed: April 11, 2003	: UNDER 37 CFR 1.313(c)(2)
Attorney Docket No. 62274.000024	:

This is a decision on the petition, filed September 2, 2004, under 37 CFR 1.313(c)(2) to withdraw the above-identified application from issue after payment of the issue fee.

The petition is **GRANTED**.

The above-identified application is withdrawn from issue for consideration of a submission under 37 CFR 1.114 (request for continued examination). See 37 CFR 1.313(c)(2).

Petitioner is advised that the issue fee paid on February 25, 2004 in the above-identified application cannot be refunded. If, however, the above-identified application is again allowed, petitioner may request that it be applied towards the issue fee required by the new Notice of Allowance.[1]

Telephone inquiries should be directed to the undersigned at (703) 305-8680.

This matter is being referred to Technology Center AU 2876 for processing of the request for continued examination under 37 CFR 1.114 and for consideration of the concurrently filed Information Disclosure Statement.

Frances Hicks
Frances Hicks
Petitions Examiner
Office of Petitions
Office of the Deputy Commissioner
for Patent Examination Policy

---

[1] *The request to apply the issue fee to the new Notice may be satisfied by completing and returning the new Issue Fee Transmittal Form PTOL-85(b), which includes the following language thereon: "Commissioner for Patents is requested to apply the Issue Fee and Publication Fee (if any) or re-apply any previously paid issue fee to the application identified above." Petitioner is advised that, whether a fee is indicated as being due or not, the Issue Fee Transmittal Form* ***must*** *be completed and timely submitted to avoid abandonment. Note the language in bold text on the first page of the Notice of Allowance and Fee(s) Due (PTOL-85).*

UNITED STATES PATENT AND TRADEMARK OFFICE

Commissioner for Patents
United States Patent and Trademark Office
P.O. Box 1450
Alexandria, VA 22313-1450
www.uspto.gov

102004

J. Michael Martinez de Andino, Esq.
HUNTON & WILLIAMS
Riverfront Plaza, East Tower
951 East Byrd Street
Richmond, VA 23219-4074

RECEIVED
OCT 28 2004
TECHNOLOGY CENTER 2800

In re Application of:
Phillip Craig Graves et al.
Serial No.: 10/411,971
Filed: April 11, 2003
For: SYSTEM AND METHOD FOR MANAGING STORED-VALUED CARD DATA

DECISION ON PETITION TO MAKE SPECIAL

This is a decision on the petition under 37 C.F.R. § 1.102, filed October 1, 2003, to make the above-identified application special.

The petition requests that the above-identified application be made special under the accelerated examination procedure set forth in the Manual for Patent Examining Procedure (M.P.E.P.), section 708.02, item II: Infringement.

A grantable petition under 37 C.F.R. § 1.102(d), M.P.E.P. § 708.02, item II, must be accompanied by the required fee pursuant to 37 C.F.R. § 1.17(h) and allege facts under oath or declaration to show, or indicate why it is not possible to show, that:

1. there is an infringing device or product actually on the market or method in use,

2. that a rigid comparison on the alleged infringing device, product or method with the claims of the application was made,

3. that the claims are unquestionably infringed, and

4. that a careful search of the prior art was made or that applicant has good knowledge of the pertinent prior art.

The petition satisfies the above-listed requirements for special status.

The petition is GRANTED.

The application is being forwarded to the examiner for expedited prosecution.

If the examiner can make this application special without prejudice to any possible interfering applications, and she should make a rigid search for such, she is authorized to do so for the next action. Should the application be rejected, the application will not be considered special for the subsequent action unless the applicant promptly makes a bona fide effort to place the application in condition for allowance, even if it is necessary to have an interview with the examiner to accomplish this purpose.

If the examiner finds any interfering application for the same subject matter, she should consider such application simultaneously with this application and should state in the official letter of such application that she is taking it out of its turn because of possible interference.

Should an appeal be taken in this application or should this application becomes involved in an interference, consideration of the appeal and the interference will be expedited by all Patent and Trademark Office officials concerned, contingent likewise upon diligent prosecution by the applicant.

After allowance, this application will be given priority for printing. See M.P.E.P. § 1309.

The petition is granted to the extent indicated.

Henry Phan

Hien H. Phan, Special Program Examiner
Technology Center 2800
Semiconductors, Electrical and Optical
Systems and Components

UNITED STATES PATENT AND TRADEMARK OFFICE

COMMISSIONER FOR PATENTS
UNITED STATES PATENT AND TRADEMARK OFFICE
P.O. BOX 1450
ALEXANDRIA, VA 22313-1450
www.uspto.gov

BAKER BOTTS L.L.P.
30 ROCKEFELLER PLAZA
44th Floor
NEW YORK NY 10112-4498

MAILED

MAR 31 2009

OFFICE OF PETITIONS

In re Patent No. 7,452,535	: DECISION ON REQUEST
Davis et al.	: FOR
Issue Date: November 18, 2008	: RECONSIDERATION OF
Application No. 10/411,973	: PATENT TERM ADJUSTMENT
Filed: April 11, 2003	:
Attorney Docket No. 077375.0151	:

This is a decision on the "REQUEST FOR RECONSIDERATION OF PATENT TERM ADJUSTMENT UNDER 37 CFR §1.705(d)" filed January 15, 2009. Patentees request that the patent term adjustment indicated in the patent be corrected from one hundred ninety-one (191) to six hundred forty-eight (648) days.

The request for reconsideration of the patent term adjustment indicated on the patent is **DISMISSED**.

On November 18, 2008, the above-identified application matured into U.S. Patent No. 7,452,535. The instant request for reconsideration was timely filed within 2 months of the date the patent issued. See § 1.705(d). The Patent issued with a revised Patent Term Adjustment of 191 days. Patentees request correction of the patent term adjustment to increase the patent term adjustment to 648 days in that pursuant to 35 U.S.C. § 154(b) the Office failed to issue a patent within three years of the actual filing date of the above-referenced application in accordance with 37 CFR 1.702(b).

Patentees acknowledge that the ability to accumulate additional patent term adjustment against the three-year pendency ended with the filing of an RCE on July 13, 2007. The filing of the RCE does not otherwise affect PTA. However, patentees contend that they are entitled to a period of patent term adjustment

equal to the period of delays based on the grounds set forth in 37 CFR §1.702 reduced by the period of time equal to the period of time during which patentees failed to engage in reasonable efforts to conclude prosecution pursuant to 37 CFR §1.704.

In other words, the period of Office delay reduced by the period of applicant delay. The period of reduction of 318 days for applicant delay is not in dispute. Patentees maintain that the total period of Office delay is the sum of the period of Three Years Delay (457 days) and the period of Examination Delay (509 days) to the extent that these periods of delay are not overlapping. Patentees maintain that these periods do not overlap. As such, patentees assert entitlement to a patent term adjustment of 648 days (457 + 509 - 318).

Patentees' interpretation of the period of overlap has been considered and found to be incorrect.

The Office does not agree and contends that the entire period of 458 (not 457 days) overlaps with the days of patent term adjustment accorded prior to the issuance of the patent. Patentees' interpretation of the period of overlap has been considered and found to be incorrect. Patentees' calculation of the period of overlap is inconsistent with the Office's interpretation of this provision. 35 U.S.C. 154(b)(2)(A) limits the adjustment of patent term, as follows:

> to the extent that the periods of delay attributable to grounds specified in paragraph (1) overlap, the period of any adjustment granted under this subsection shall not exceed the actual number of days the issuance of the patent was delayed.

Likewise, 37 CFR 1.703(f) provides that:

> To the extent that periods of delay attributable to the grounds specified in §1.702 overlap, the period of adjustment granted under this section shall not exceed the actual number of days the issuance of the patent was delayed.

As explained in *Explanation of 37 CFR 1.703(f) and of the United States Patent and Trademark Office Interpretation of 35 U.S.C. 154(b)(2)(A)*, 69 Fed. Reg. 34283 (June 21, 2004), the Office interprets 35 U.S.C. 154(b)(2)(A) as permitting either patent

term adjustment under 35 U.S.C. 154(b)(1)(A)(i)-(iv), or patent term adjustment under 35 U.S.C. 154(b)(1)(B), but not as permitting patent term adjustment under both 35 U.S.C. 154(b)(1)(A)(i)-(iv) and 154(b)(1)(B). Accordingly, the Office implements the overlap provision as follows:

> If an application is entitled to an adjustment under 35 U.S.C. 154(b)(1)(B), the entire period during which the application was pending (except for periods excluded under 35 U.S.C. 154(b)(1)(B)(i)-(iii)), and not just the period beginning three years after the actual filing date of the application, is the period of delay under 35 U.S.C. 154(b)(1)(B) in determining whether periods of delay overlap under 35 U.S.C. 154(b)(2)(A). Thus, any days of delay for Office issuance of the patent more than 3 years after the filing date of the application, which overlap with the days of patent term adjustment accorded prior to the issuance of the patent will not result in any additional patent term adjustment. See 35 U.S.C. 154(b)(1)(B), 35 U.S.C. 154(b)(2)(A), and 37 CFR § 1.703(f). See *Changes to Implement Patent Term Adjustment Under Twenty Year Term; Final Rule*, 65 Fed. Reg. 54366 (Sept. 18, 2000). See also *Revision of Patent Term Extension and Patent Term Adjustment Provisions; Final Rule*, 69 Fed. Reg. 21704 (April 22, 2004), 1282 Off. Gaz. Pat. Office 100 (May 18, 2004). See also *Explanation of 37 CFR 1.703(f) and of the United States Patent and Trademark Office Interpretation of 35 U.S.C. 154(b)(2)(A)*, 69 Fed. Reg. 34283 (June 21, 2004).

The current wording of § 1.703(f) was revised in response to the misinterpretation of this provision by a number of applicants. The rule was slightly revised to more closely track the corresponding language of 35 U.S.C. 154(b)(2)(A). The relevant portion differs only to the extent that the statute refers back to provisions of the statute whereas the rule refers back to sections of the rule. This was not a substantive change to the rule nor did it reflect a change of the Office's interpretation of 35 U.S.C. 154(b)(2)(A). As stated in the *Explanation of 37 CFR 1.703(f) and of the United States Patent and Trademark Office Interpretation of 35 U.S.C. 154(b)(2)(A)*, the Office has consistently taken the position that if an application is entitled to an adjustment under the three-year pendency provision of 35 U.S.C. 154(b)(1)(B), the entire period during which the application was pending before the Office (except for

periods excluded under 35 U.S.C. 154(b)(1)(B)(i)-(iii)), and not just the period beginning three years after the actual filing date of the application, is the relevant period under 35 U.S.C. 154(b)(1)(B) in determining whether periods of delay "overlap" under 35 U.S.C. 154(b)(2)(A).

This interpretation is consistent with the statute. Taken together the statute and rule provide that to the extent that periods of delay attributable to grounds specified in 35 U.S.C. 154(b)(1) and in corresponding §1.702 overlap, the period of adjustment granted shall not exceed the actual number of days the issuance of the patent was delayed. The grounds specified in these sections cover the A) guarantee of prompt Patent and Trademark Office responses, B) guarantee of no more than 3 year application pendency, and C) guarantee or adjustments for delays due to interference, secrecy orders and appeals. A section by section analysis of 35 U.S.C. 154(b)(2)(A) specifically provides that:

> Section 4402 imposes limitations on restoration of term. In general, pursuant to [35 U.S.C.] 154(b)(2)(A)-(C), total adjustments granted for restorations under [35 U.S.C. 154](b)(1) are reduced as follows: (1) To the extent that there are multiple grounds for extending the term of a patent that may exist simultaneously (e.g., delay due to a secrecy order under [35 U.S.C.] 181 and administrative delay under [35 U.S.C.] 154(b)(1)(A)), the term should not be extended for each ground of delay but only for the actual number of days that the issuance of a patent was delayed; See 145 Cong. Rec. S14,718[1]

As such, the period for over 3 year pendency does not overlap only to the extent that the actual dates in the period beginning three years after the date on which the application was filed overlap with the actual dates in the periods for failure of the Office to take action within specified time frames. In other words, consideration of the overlap does not begin three years after the filing date of the application. Treating the relevant period as starting on April 11, 2006, the date that is 3 years after the actual filing date of the application is incorrect.

---

[1] The AIPA is title IV of the Intellectual Property and Communications Omnibus Reform Act of 1999 (S. 1948), which was incorporated and enacted as law as part of Pub. L. 106-113. The Conference Report for H.R. 3194, 106th Cong. 1st Sess. (1999), which resulted in Pub. L. 106-113, does not contain any discussion (other than the incorporated language) of S. 1948. A section-by-section analysis of S. 1948, however, was printed in the Congressional Record at the request of Senator Lott, See 145 Cong. Rec. S14,708-26 (1999)(daily ed. Nov. 17, 1999).

In this instance, the relevant period under 35 U.S.C. 154(b)(1)(B) in determining whether periods of delay "overlap" under 35 U.S.C. 154(b)(2)(A) is the entire period during which the application was pending before the Office until the filing of the RCE, April 11, 2003 to July 13, 2007. During that time, the issuance of the patent was delayed by 509 days, not 509 + 458 days. The Office took 14 months and 509 days to issue a first Office action. Otherwise, the Office took all actions set forth in 37 C.F.R. § 1.702(a) within the prescribed timeframes. Nonetheless, given the initial 509 days of Office delay and the 318 days of applicant delay and the time allowed within the timeframes for processing and examination, at the time of filing of the RCE, the application was pending three years and 458 days after its filing date. The Office did not delay 509 days and then an additional 458 days. Accordingly, 509 days of patent term adjustment (not 509 and 458 days) was properly entered since the period of delay of 458 days attributable to the delay in the issuance of the patent overlaps with the adjustment of 509 days attributable to grounds specified in § 1.702(a)(1). Entry of both periods is not warranted. 509 days is determined to be the actual number of days that the issuance of the patent was delayed, considering the 458 days over three years. Accordingly, at issuance, the Office properly entered 0 additional days of patent term adjustment specifically for the Office taking in excess of 3 years to issue the patent.

In view thereof, the instant patent is not entitled to further adjustment.

Receipt of the $200.00 fee set forth in 37 CFR 1.18(e) is acknowledged. No additional fees are required.

Telephone inquiries specific to this matter should be directed to Charlema Grant, Petitions Attorney, at (571) 272-3215.

Nancy Johnson
Senior Petitions Attorney
Office of Petitions

UNITED STATES PATENT AND TRADEMARK OFFICE

COMMISSIONER FOR PATENTS
UNITED STATES PATENT AND TRADEMARK OFFICE
P.O. BOX 1450
ALEXANDRIA, VA 22313-1450
www.uspto.gov

Baker Botts LLP
30 Rockefeller Plaza
44th Floor
New York, New York 10112-4498

MAILED

APR 12 2010

OFFICE OF PETITIONS

In re Patent No. 7,452,535	:
Davis et al.	: DECISION UPON REMAND AND
Issue Date: November 18, 2008	: RECONSIDERATION OF
Application No. 10/411,973	: PATENT TERM ADJUSTMENT
Filed: April 11, 2003	: AND NOTICE OF INTENT
Attorney Docket No. 077375.0151	: TO ISSUE CERTIFICATE OF
Title: Methods of Treatment	: CORRECTION
using CTLA-4 Antibodies	:

This is a decision following remand from the District Court for the District of Columbia regarding the patent term adjustment indicated on the above-identified patent. The Court remanded this matter to the U.S. Patent and Trademark Office for recalculation of the patent term adjustment in accordance with the decision in Wyeth & Elan Pharma Int'l Ltd. v. Kappos, 591 F.3d 1364 (Fed. Cir. 2010).

The patent term adjustment indicated on the above-identified patent has been recalculated as directed by the Court. The term of the above-identified patent is extended or adjusted by six hundred and forty-eight (648) days.

The application is being forwarded to the Certificates Branch for issuance of a certificate of correction indicating that the term of the above-identified patent is extended or adjusted by six hundred and forty-eight (648) days.

Telephone inquiries specific to this matter should be directed to Senior Legal Advisor, Kery A. Fries at (571) 272-7757.

/Kery A. Fries/

Kery A. Fries
Senior Legal Advisor Attorney
Office of Patent Legal Administration
Office of Associate Commissioner
For Patent Examination Policy

Enclosure: Copy of DRAFT Certificate of Correction

UNITED STATES PATENT AND TRADEMARK OFFICE

CERTIFICATE OF CORRECTION

PATENT : 7,452,535 B2

DATED : June 18, 2008 **DRAFT**

INVENTOR(S) : Davis et al.

It is certified that error appears in the above-identified patent and that said Letters Patent is hereby corrected as shown below:

On the cover page,

[*] Notice: Subject to any disclaimer, the term of this patent is extended or adjusted under 35 USC 154(b) by 191 days

Delete the phrase "by 191 days" and insert – by 648 days--

PALM INTRANET

Day : Friday
Date: 4/9/2010
Time: 13:49:27

PTA Calculations for Application: 10/411973			
Application Filing Date:	04/11/2003	PTO Delay (PTO):	509
Issue Date of Patent:	11/18/2008	Three Years:	0
Pre-Issue Petitions:	0	Applicant Delay (APPL):	318
Post-Issue Petitions:	0	Total PTA (days):	648
PTO Delay Adjustment:	457		

File Contents History

Number	Date	Contents Description	PTO	APPL	START
98	04/09/2010	ADJUSTMENT OF PTA CALCULATION BY PTO	457		
88.5	10/29/2008	PTA 36 MONTHS			
88	11/18/2008	PATENT ISSUE DATE USED IN PTA CALCULATION			
87	10/17/2008	EXPORT TO FINAL DATA CAPTURE			
86	10/16/2008	DISPATCH TO FDC			
85	10/15/2008	APPLICATION IS CONSIDERED READY FOR ISSUE			
84	10/13/2008	ISSUE FEE PAYMENT VERIFIED			
83	10/13/2008	ISSUE FEE PAYMENT RECEIVED			
82	09/02/2008	MISCELLANEOUS INCOMING LETTER		78	
81	09/02/2008	WORKFLOW - DRAWINGS FINISHED		0	
80	08/12/2008	FINISHED INITIAL DATA CAPTURE			
79	07/24/2008	SEQUENCE FORWARDED TO PUBS ON TAPE			
74	07/14/2008	MAIL NOTICE OF ALLOWANCE			
73	07/07/2008	ISSUE REVISION COMPLETED			
72	07/07/2008	NOTICE OF ALLOWANCE DATA VERIFICATION COMPLETED			
71	07/07/2008	CASE DOCKETED TO EXAMINER IN GAU			
70	07/07/2008	ALLOWED CASE RETURNED TO THE EXAMINER FOR CLERICAL PROCESSING			
69	07/07/2008	DOCUMENT VERIFICATION			
68	07/07/2008	EXAMINER'S AMENDMENT COMMUNICATION			
67	07/07/2008	NOTICE OF ALLOWABILITY			
66	07/01/2008	EXAMINER INTERVIEW SUMMARY RECORD (PTOL - 413)			
62	03/28/2008	AFFIDAVIT(S) (RULE 131 OR 132) OR EXHIBIT(S) RECEIVED			

61	04/28/2008	DATE FORWARDED TO EXAMINER			
60	03/28/2008	RESPONSE AFTER NON-FINAL ACTION		91	56
59	03/28/2008	REQUEST FOR EXTENSION OF TIME - GRANTED			
58	10/02/2007	ELECTRONIC REVIEW			
57	09/29/2007	EMAIL NOTIFICATION			
56	09/28/2007	MAIL NON-FINAL REJECTION			
55	09/24/2007	NON-FINAL REJECTION			
54	07/13/2007	INFORMATION DISCLOSURE STATEMENT CONSIDERED			
53	07/13/2007	INFORMATION DISCLOSURE STATEMENT (IDS) FILED			
52	07/13/2007	REFERENCE CAPTURE ON IDS			
51	07/13/2007	INFORMATION DISCLOSURE STATEMENT (IDS) FILED		0	47
50	07/17/2007	DATE FORWARDED TO EXAMINER			
49	07/13/2007	AMENDMENT SUBMITTED/ENTERED WITH FILING OF CPA/RCE			
48	07/17/2007	DATE FORWARDED TO EXAMINER			
47	07/13/2007	REQUEST FOR CONTINUED EXAMINATION (RCE)			
46	07/17/2007	DISPOSAL FOR A RCE / CPA / R129			
45	07/13/2007	REQUEST FOR EXTENSION OF TIME - GRANTED			
44	07/13/2007	WORKFLOW - REQUEST FOR RCE - BEGIN			
43	04/16/2007	NOTICE OF APPEAL FILED		59	41
42	04/16/2007	REQUEST FOR EXTENSION OF TIME - GRANTED			
41	11/16/2006	MAIL FINAL REJECTION (PTOL - 326)			
40	11/13/2006	FINAL REJECTION			
39	08/21/2006	INFORMATION DISCLOSURE STATEMENT CONSIDERED			
38.7	08/21/2006	INFORMATION DISCLOSURE STATEMENT (IDS) FILED		0	36
38	08/21/2006	INFORMATION DISCLOSURE STATEMENT (IDS) FILED			
37	09/01/2006	DATE FORWARDED TO EXAMINER			
36	08/21/2006	RESPONSE AFTER NON-FINAL ACTION		90	30
35	08/21/2006	REQUEST FOR EXTENSION OF TIME - GRANTED			

34	08/30/2006	CRF IS GOOD TECHNICALLY / ENTERED INTO DATABASE			
33	08/11/2006	CORRESPONDENCE ADDRESS CHANGE			
32	08/11/2006	CHANGE IN POWER OF ATTORNEY (MAY INCLUDE ASSOCIATE POA)			
31	07/10/2006	CORRESPONDENCE ADDRESS CHANGE			
30	02/23/2006	MAIL NON-FINAL REJECTION			
29	02/16/2006	NON-FINAL REJECTION			
28	05/27/2005	INFORMATION DISCLOSURE STATEMENT CONSIDERED			
27	07/01/2004	INFORMATION DISCLOSURE STATEMENT CONSIDERED			
26	09/05/2003	INFORMATION DISCLOSURE STATEMENT CONSIDERED			
25	08/27/2003	INFORMATION DISCLOSURE STATEMENT CONSIDERED			
24	12/20/2005	DATE FORWARDED TO EXAMINER			
23	11/28/2005	RESPONSE TO ELECTION / RESTRICTION FILED			
22	11/02/2005	MAIL RESTRICTION REQUIREMENT	509		-1
21	10/27/2005	REQUIREMENT FOR RESTRICTION / ELECTION			
20.7	05/27/2005	INFORMATION DISCLOSURE STATEMENT (IDS) FILED			
20	05/27/2005	INFORMATION DISCLOSURE STATEMENT (IDS) FILED			
19	07/01/2004	REFERENCE CAPTURE ON IDS			
18.7	07/01/2004	INFORMATION DISCLOSURE STATEMENT (IDS) FILED			
18	07/01/2004	INFORMATION DISCLOSURE STATEMENT (IDS) FILED			
17	06/28/2004	CASE DOCKETED TO EXAMINER IN GAU			
16	04/06/2004	CASE DOCKETED TO EXAMINER IN GAU			
15	03/03/2004	IFW TSS PROCESSING BY TECH CENTER COMPLETE			
14	03/03/2004	IFW TSS PROCESSING BY TECH CENTER COMPLETE			
13.7	09/05/2003	INFORMATION DISCLOSURE STATEMENT (IDS) FILED			
13	09/05/2003	INFORMATION DISCLOSURE STATEMENT (IDS) FILED			
12.7	08/27/2003	INFORMATION DISCLOSURE STATEMENT (IDS) FILED			

12	08/27/2003	INFORMATION DISCLOSURE STATEMENT (IDS) FILED			
11	03/03/2004	CASE DOCKETED TO EXAMINER IN GAU			
10	10/01/2003	APPLICATION DISPATCHED FROM OIPE			
9	10/01/2003	APPLICATION IS NOW COMPLETE			
8	08/27/2003	ADDITIONAL APPLICATION FILING FEES			
7	04/11/2003	A STATEMENT BY ONE OR MORE INVENTORS SATISFYING THE REQUIREMENT UNDER 35 USC 115, OATH OF THE APPLIC			
5	06/03/2003	NOTICE MAILED--APPLICATION INCOMPLETE--FILING DATE ASSIGNED			
3	05/11/2003	IFW SCAN & PACR AUTO SECURITY REVIEW			
2	04/28/2003	IFW SCAN & PACR AUTO SECURITY REVIEW			
1	04/11/2003	INITIAL EXAM TEAM NN			

Search Another: Application# Search

EXPLANATION OF PTA CALCULATION

EXPLANATION OF PTE CALCULATION

To go back, right click here and select Back. To go forward, right click here and select Forward. To refresh, right click here and select Refresh.

Back to OASIS | Home page

UNITED STATES PATENT AND TRADEMARK OFFICE

Commissioner for Patents
United States Patent and Trademark Office
P.O. Box 1450
Alexandria, VA 22313-1450
www.uspto.gov

DAVID L. FEHRMAN
MORRISON & FOERSTER LLP
35TH FLOOR
555 W. 5TH STREET
LOS ANGELES CA 90013

COPY MAILED

APR 12 2006

OFFICE OF PETITIONS

In re Application of	:	
Tsuyoshi Futamase et al	:	
Application No. 10/411,985	:	ON PETITION
Filed: April 11, 2003	:	
Attorney Docket No. 393032016811	:	

This is a decision on the petition, filed March 6, 2006, under 37 CFR 1.313(c)(2) to withdraw the above-identified application from issue after payment of the issue fee.

The petition is **GRANTED**.

The above-identified application is withdrawn from issue for consideration of a submission under 37 CFR 1.114 (request for continued examination). See 37 CFR 1.313(c)(2).

Petitioner is advised that the issue fee paid on October 31, 2005, in the above-identified application cannot be refunded. If, however, the above-identified application is again allowed, petitioner may request that it be applied towards the issue fee required by the new Notice of Allowance.[1]

Telephone inquiries should be directed to the undersigned at (571) 272-3208.

The examiner of Technology Center AU 2837 will consider the request for continued examination under 37 CFR 1.114.

Karen Creasy
Petitions Examiner
Office of Petitions
Office of the Deputy Commissioner
for Patent Examination Policy

---

[1] The request to apply the issue fee to the new Notice may be satisfied by completing and returning the new Issue Fee Transmittal Form PTOL-85(b), which includes the following language thereon: "Commissioner for Patents is requested to apply the Issue Fee and Publication Fee (if any) or re-apply any previously paid issue fee to the application identified above." Petitioner is advised that, whether a fee is indicated as being due or not, the Issue Fee Transmittal Form **must** be completed and timely submitted to avoid abandonment. Note the language in bold text on the first page of the Notice of Allowance and Fee(s) Due (PTOL-85).

UNITED STATES PATENT AND TRADEMARK OFFICE

Commissioner for Patents
United States Patent and Trademark Office
P.O. Box 1450
Alexandria, VA 22313-1450
www.uspto.gov

LEIGHTON K. CHONG
PATENT ATTORNEY
133 KAAI STREET
HONOLULU HI 96821

MAILED

JUL 06 2010

OFFICE OF PETITIONS

In re Application of
Kostic, et al.
Application No. 10/411,987
Filed/Deposited: 11 April, 2003
Attorney Docket No. CLK-CIP

DECISION

This is a decision on the petition filed on 12 February, 2010, to revive an application under 37 C.F.R. §1.137(b) as having been abandoned due to unintentional delay.

The petition under 37 C.F.R. §1.137(b) is **DISMISSED**.

Any request for reconsideration of this decision must be submitted within TWO (2) MONTHS from the mail date of this decision. Extensions of time under 37 CFR §1.136(a) are permitted. The reconsideration request should include a cover letter entitled "Renewed Petition under 37 CFR §1.137(b)."

This is **not** a final agency action within the meaning of 5 U.S.C. §704.

As to the Allegations
of Unintentional Delay

The requirements of a grantable petition pursuant to 37 CFR §1.137(b) are the petition and fee therefor, a reply, a proper statement and/or showing of unintentional delay under the regulation, and, where applicable, a terminal disclaimer and fee.

It appears that Petitioner has not satisfied the fee, the reply or the statement/showing requirements.

Petitioners' attentions always are directed to the guidance in the Commentary at MPEP §711.03(c) as to the requirements for a petition pursuant to 37 C.F..R §1.137(b).

BACKGROUND

The record reflects as follows:

It is unclear the basis for the instant petition—the application does not appear to be abandoned. However, the Office will not seek to interpret Petitioner's intent and because Petitioner failed provide any of the underlying requirements to the petition (fee, reply, statement), the Office will not address the matter substantively at this time.

Petitioner—as one registered to practice before the Office—well knows that:

- the Office will not treat petition filed pursuant to 37 C.F.R. §1.137(b) without fee; and
- such a petition also requires the elements set forth above and discussed at MPEP §711.03(c).

Petitioners' attentions always are directed to the guidance in the Commentary at MPEP §711.03(c) as to the requirements for a petition pursuant to 37 C.F.R. §1.137(b).

*The deficiencies **must** be addressed and satisfied on any renewed petition.*

The availability of applications and application papers online to applicants/practitioners who diligently associate their Customer Number with the respective application(s) now provides an applicant/practitioner on-demand information as to events/transactions in an application. Thus, now if one wishes to know the progress in and/or status of an application or the accuracy of the data therein, one need only look at the file online.

Out of an abundance of caution, Petitioners always are reminded that those registered to practice *and* all others who make representations before the Office must inquire into the underlying facts of representations made to the Office and support averments with the appropriate documentation–since all owe to the Office the continuing duty to disclose.[1]

[1] See supplement of 17 June, 1999. The Patent and Trademark Office is relying on petitioner's duty of candor and good faith and accepting a statement made by Petitioner. See Changes to Patent Practice and Procedure, 62 Fed. Reg. at 53160 and 53178, 1203 Off. Gaz. Pat. Office at 88 and 103 (responses to comments 64 and 109)(applicant obligated under 37 C.F.R. §10.18 to inquire into the underlying facts and circumstances when providing statements to the Patent and Trademark Office). See specifically, the regulations at 37 C.F.R. §10.18.

STATUTES, REGULATIONS

Congress has authorized the Commissioner to "revive an application if the delay is shown to the satisfaction of the Commissioner to have been "unavoidable." 35 U.S.C. §133 (1994).

The regulations at 37 C.F.R. §1.137(a) and (b) set forth the requirements for a Petitioner to revive a previously unavoidably or unintentionally, respectively, abandoned application.[2],[3]

As to the Allegations of Unintentional Delay

The requirements of a grantable petition pursuant Application No. 11/454,261 the petition and fee therefor, a reply, a proper statement and/or showing of unintentional delay under the regulation, and, where applicable, a terminal disclaimer and fee.

It appears that Petitioner has not satisfied the requirements under the rule.

CONCLUSION

The instant petition under 37 C.F.R. §1.137(b) is **dismissed**.

Further correspondence with respect to this matter should be addressed as follows:

By Mail: Mail Stop PETITION
Commissioner for Patents
P. O. Box 1450
Alexandria, VA 22313-1450

---

[2] See: Changes to Patent Practice and Procedure; Final Rule Notice, 62 Fed. Reg. at 53158-59 (October 10, 1997), 1203 Off. Gaz. Pat. Office at 86-87 (October 21, 1997).

[3] The language of 35 U.S.C. §133 and 37 C.F.R. §1.137(a) is clear, unambiguous, and without qualification: the delay in tendering the reply to the outstanding Office action, as well as filing the first petition seeking revival, must have been unavoidable for the reply now to be accepted on petition. (Therefore, by example, an unavoidable delay in the payment of the Filing Fee might occur if a reply is shipped by the US Postal Service, but due to catastrophic accident, the delivery is not made.) Delays in responding properly raise the question whether delays are unavoidable. Where there is a question whether the delay was unavoidable, Petitioners must meet the burden of establishing that the delay was unavoidable within the meaning of 35 U.S.C. §133 and 37 C.F.R. §1.137(a) And the Petitioner must be diligent in attending to the matter. Failure to do so does not constitute the care required under Pratt, and so cannot satisfy the test for diligence and due care. (By contrast, unintentional delays are those that do not satisfy the very strict statutory and regulatory requirements of unavoidable delay, and also, by definition, are not intentional.))

By hand: U. S. Patent and Trademark Office
Customer Service Window, Mail Stop Petitions
Randolph Building
401 Dulany Street
Alexandria, VA 22314

The centralized facsimile number is **(571) 273-8300.**

Telephone inquiries regarding this decision may be directed to the undersigned at (571) 272-3214—it is noted, however, that all practice before the Office is in writing (see: 37 C.F.R. §1.2[4]) and the proper authority for action on any matter in this regard are the statutes (35 U.S.C.), regulations (37 C.F.R.) and the commentary on policy (MPEP). Therefore, no telephone discussion may be controlling or considered authority for Petitioner's action(s).

/John J. Gillon, Jr./
John J. Gillon, Jr.
Senior Attorney
Office of Petitions

[4] The regulations at 37 C.F.R. §1.2 provide:
§1.2 Business to be transacted in writing.
All business with the Patent and Trademark Office should be transacted in writing. The personal attendance of applicants or their attorneys or agents at the Patent and Trademark Office is unnecessary. The action of the Patent and Trademark Office will be based exclusively on the written record in the Office. No attention will be paid to any alleged oral promise, stipulation, or understanding in relation to which there is disagreement or doubt.

Under the Paperwork Reduction Act of 1995, no persons are required to respond to a collection of information unless it displays valid OMB control number.

PETITION TO ACCEPT UNINTENTIONALLY DELAYED PAYMENT OF MAINTENANCE FEE IN AN EXPIRED PATENT (37 CFR 1.378(c))

Patent Number	Issue Date (YYYY-MM-DD)	Application Number	Filing Date (YYYY-MM-DD)	Docket Number (if applicable)
6732676	2004-05-11	10411995	2003-04-11	5049-0001

CAUTION: Maintenance fee (and surcharge, if any) payment must correctly identify: (1) the patent number and (2) the application number of the actual U.S. application leading to issuance of that patent to ensure the fee(s) is/are associated with the correct patent. 37 CFR 1.366(c) and (d).

SMALL ENTITY
☒ Patentee claims, or has previously claimed, small entity status. See 37 CFR 1.27.

LOSS OF ENTITLEMENT TO SMALL ENTITY STATUS
☐ Patentee is no longer entitled to small entity status. See 37 CFR 1.27(g)

NOT Small Entity		Small Entity	
Fee	Code	Fee	Code
○ 3 ½ year	(1551)	◉ 3 ½ year	(2551)
○ 7 ½ year	(1552)	○ 7 ½ year	(2552)
○ 11 ½ year	(1553)	○ 11 ½ year	(2553)

SURCHARGE
The surcharge required by 37 CFR 1.20(i)(2) (Fee Code 1558) must be paid as a condition of accepting unintentionally delayed payment of the maintenance fee.

MAINTENANCE FEE (37 CFR 1.20(e)-(g))
The appropriate maintenance fee must be submitted with this petition.

STATEMENT
THE UNDERSIGNED CERTIFIES THAT THE DELAY IN PAYMENT OF THE MAINTENANCE FEE TO THIS PATENT WAS UNINTENTIONAL

PETITIONER(S) REQUEST THAT THE DELAYED PAYMENT OF THE MAINTENANCE FEE BE ACCEPTED AND THE PATENT REINSTATED

THIS PORTION MUST BE COMPLETED BY THE SIGNATORY OR SIGNATORIES

37 CFR 1.378(d) states: "Any petition under this section must be signed by an attorney or agent registered to practice before the Patent and Trademark Office, or by the patentee, the assignee, or other party in interest."

I certify, in accordance with 37 CFR 1.4(d)(4) that I am

◉ An attorney or agent registered to practice before the Patent and Trademark Office

○ A sole patentee

○ A joint patentee; I certify that I am authorized to sign this submission on behalf of all the other patentees.

○ A joint patentee; all of whom are signing this e-petition

○ The assignee of record of the entire interest

Patent Practitioner			
A signature of the applicant or representative is required in accordance with 37 CFR 1.33 and 10.18. Please see 37 CFR 1.4(d) for the form of the signature			
Signature	/michaeldiaz/	Date (YYYY-MM-DD)	2009-02-08
Name	Michael Diaz	Registration Number	40588

This collection of information is required by 37 CFR 1.378(c). The information is required to obtain or retain a benefit by the public which is to file (and by the USPTO to process) an application. Confidentiality is governed by 35 U.S.C. 122 and 37 CFR 1.11 and 1.14. This collection is estimated to take 1 hour to complete, including gathering, preparing, and submitting the completed application form to the USPTO. Time will vary depending upon the individual case. Any comments on the amount of time you require to complete this form and/ or suggestions for reducing this burden, should be sent to the Chief Information Officer, U.S. Patent and Trademark Office, U.S. Department of Commerce, P.O. Box 1450, Alexandria, VA 22313-1450. DO NOT SEND FEES OR COMPLETED FORMS TO THIS ADDRESS. **This form can only be used when in conjunction with EFS-Web. If this form is mailed to the USPTO, it may cause delays in reinstating the patent.**

Privacy Act Statement

The Privacy Act of 1974 (P.L. 93-579) requires that you be given certain information in connection with your submission of the attached form related to a patent application or patent. Accordingly, pursuant to the requirements of the Act, please be advised that: (1) the general authority for the collection of this information is 35 U.S.C. 2(b)(2); (2) furnishing of the information solicited is voluntary; and (3) the principal purpose for which the information is used by the U.S. Patent and Trademark Office is to process and/or examine your submission related to a patent application or patent. If you do not furnish the requested information, the U.S. Patent and Trademark Office may not be able to process and/or examine your submission, which may result in termination of proceedings or abandonment of the application or expiration of the patent.

The information provided by you in this form will be subject to the following routine uses:

1. The information on this form will be treated confidentially to the extent allowed under the Freedom of Information Act (5 U.S.C. 552) and the Privacy Act (5 U.S.C. 552a). Records from this system of records may be disclosed to the Department of Justice to determine whether the Freedom of Information Act requires disclosure of these record s.

2. A record from this system of records may be disclosed, as a routine use, in the course of presenting evidence to a court, magistrate, or administrative tribunal, including disclosures to opposing counsel in the course of settlement negotiations.

3. A record in this system of records may be disclosed, as a routine use, to a Member of Congress submitting a request involving an individual, to whom the record pertains, when the individual has requested assistance from the Member with respect to the subject matter of the record.

4. A record in this system of records may be disclosed, as a routine use, to a contractor of the Agency having need for the information in order to perform a contract. Recipients of information shall be required to comply with the requirements of the Privacy Act of 1974, as amended, pursuant to 5 U.S.C. 552a(m).

5. A record related to an International Application filed under the Patent Cooperation Treaty in this system of records may be disclosed, as a routine use, to the International Bureau of the World Intellectual Property Organization, pursuant to the Patent Cooperation Treaty.

6. A record in this system of records may be disclosed, as a routine use, to another federal agency for purposes of National Security review (35 U.S.C. 181) and for review pursuant to the Atomic Energy Act (42 U.S.C. 218(c)).

7. A record from this system of records may be disclosed, as a routine use, to the Administrator, General Services, or his/her designee, during an inspection of records conducted by GSA as part of that agency's responsibility to recommend improvements in records management practices and programs, under authority of 44 U.S.C. 2904 and 2906. Such disclosure shall be made in accordance with the GSA regulations governing inspection of records for this purpose, and any other relevant (i.e., GSA or Commerce) directive. Such disclosure shall not be used to make determinations about individuals.

8. A record from this system of records may be disclosed, as a routine use, to the public after either publication of the application pursuant to 35 U.S.C. 122(b) or issuance of a patent pursuant to 35 U.S.C. 151. Further, a record may be disclosed, subject to the limitations of 37 CFR 1.14, as a routine use, to the public if the record was filed in an application which became abandoned or in which the proceedings were terminated and which application is referenced by either a published application, an application open to public inspections or an issued patent.

9. A record from this system of records may be disclosed, as a routine use, to a Federal, State, or local law enforcement agency, if the USPTO becomes aware of a violation or potential violation of law or regulation.

UNITED STATES PATENT AND TRADEMARK OFFICE

Commissioner for Patents
United States Patent and Trademark Office
P.O. Box 1450
Alexandria, VA 22313-1450
www.uspto.gov

In re Patent No. 6732676
Issue Date: May 11,2004
Application No. 10411995
Filed: April 11,2003
Attorney Docket No. 5049-0001

:

:DECISION GRANTING PETITION
:UNDER 37 CFR 1.378(c)

:

This is a decision on the electronic petition, filed February 8,2009 ,under 37 CFR 1.378(c) to accept the unintentionally delayed payment of the 3.5 year maintenance fee for the above-identified patent.

The petition is **GRANTED**.

The maintenance fee is accepted, and the above-identified patent reinstated as of February 8,2009 . This decision also constitutes notice that the fee has been accepted. An electronic copy of the petition and this decision has been created as an entry in the Image File Wrapper. Nevertheless, petitioner should print and retain an independent copy.

Telephone inquiries related to this electronic decision should be directed to the Electronic Business Center at 1-866-217-9197.

UNITED STATES PATENT AND TRADEMARK OFFICE

Commissioner for Patents
United States Patent and Trademark Office
P.O. Box 1450
Alexandria, VA 22313-1450
www.uspto.gov

COPY MAILED

FEB 12 2007

OFFICE OF PETITIONS

AVAGO TECHNOLOGIES, LTD.
P.O. BOX 1920
DENVER CO 80201-1920

In re Application of	:	
Richard K. Karlquist	:	
Application No. 10/411,996	:	ON PETITION
Filed: April 11, 2003	:	
Attorney Docket No. 10020557-1	:	

This is a decision on the petition, filed February 9, 2007, under 37 CFR 1.313(c)(2) to withdraw the above-identified application from issue after payment of the issue fee.

The petition is **GRANTED**.

The above-identified application is withdrawn from issue for consideration of a submission under 37 CFR 1.114 (request for continued examination). See 37 CFR 1.313(c)(2).

Petitioner is advised that the issue fee paid on December 15, 2006 in the above-identified application cannot be refunded. If, however, the above-identified application is again allowed, petitioner may request that it be applied towards the issue fee required by the new Notice of Allowance.[1]

The instant petition under 37 CFR 1.313(c)(2), the RCE and the IDS, filed on February 9, 2007, are not signed by an attorney of record. However, in accordance with 37 CFR 1.34(a), the signature of Robert W. Nelson appearing on the correspondence shall constitute a representation to the United States Patent and Trademark Office that he is authorized to represent the particular party in whose behalf he act. However, if Mr. Nelson desires to receive correspondence regarding this file, the appropriate power of attorney documentation must be submitted. A courtesy copy of this decision is being mailed to Mr. Nelson, the petitioner herein. Until otherwise instructed, all future correspondence regarding this application file will be directed solely to the above-noted correspondence

---

[1] The request to apply the issue fee to the new Notice may be satisfied by completing and returning the new Issue Fee Transmittal Form PTOL-85(b), which includes the following language thereon: "Commissioner for Patents is requested to apply the Issue Fee and Publication Fee (if any) or re-apply any previously paid issue fee to the application identified above." Petitioner is advised that, whether a fee is indicated as being due or not, the issue Fee Transmittal Form **must** be completed and timely submitted to avoid abandonment. Note the language in bold text on the first page of the Notice of Allowance and Fee(s) Due (PTOL-85).

address of record.

Telephone inquiries should be directed to the undersigned at (571) 272-3208.

The examiner of Technology Center AU 2611 will consider the request for continued examination under 37 CFR 1.114.

Karen Creasy

Karen Creasy
Petitions Examiner
Office of Petitions

cc:
KLAAS, LAW O'MEARA & MALKIN, P.C.
1999 BROADWAY, SUITE 2225
DENVER, CO 80202

UNITED STATES PATENT AND TRADEMARK OFFICE

Commissioner for Patents
United States Patent and Trademark Office
P.O. Box 1450
Alexandria, VA 22313-1450
www.uspto.gov

STEFAN KIRCHANSKI
LINER YANKELEVITZ SUNSHINE & REGENSTREIF LLP
1100 GLENDON AVENUE, 14TH FLOOR
LOS ANGELES, CA 90024

Paper No. 12

COPY MAILED

MAR 14 2006

OFFICE OF PETITIONS

In re Application of :
SHANBROM :
Application No. 10/412,003 :
Filed: April 11, 2003 :
Attorney Docket No. 355864.06100 :

DECISION
ON PETITION

This is a decision on the petition filed December 30, 2005, which is being treated as a request under 37 CFR 1.181 (no fee) for withdrawal of the holding of abandonment of the above-identified application.

The petition under 37 CFR 1.181 is **GRANTED**. The holding of abandonment is vacated, and this application restored to pending status.

The application purportedly became abandoned for failure to reply in a timely manner to the Notice to File Missing Parts of Nonprovisional Application mailed June 12, 2003, which set a period for reply of two (2) months. A Notice of Abandonment was mailed December 27, 2005, indicating that no reply to the June 12, 2003 Notice to File Missing Parts had been received.

A review of Office records includes the transmittal for a Response to Notice to File Missing Parts of Application with a certificate of mailing of August 12, 2003, itemizing the inclusion of the copy of the Notice of Missing Parts of Application Filing Date Granted, an executed declaration, the surcharge for the late filing of the declaration, an executed assignment with recordation fee and a return postcard. The file also includes the copy of Notice of Missing Parts of Application Filing Date Granted with evidence of the $65 surcharge for the late filing of the declaration being charged to petitioner's deposit account. Further review of Office records indicates that the executed declaration was timely filed and improperly recorded with the assignment. The declaration has been made of record. Accordingly, the evidence submitted with the petition coupled with current Office records is convincing that the correspondence was timely entrusted to the USPS, and subsequently misplaced after receipt at the USPTO. The holding of abandonment is withdrawn, and this application is recognized as never having been abandoned in the first instance.

Telephone inquiries concerning this decision should be directed to Denise Pothier at (571) 272-4787.

The application matter is being forwarded to Office of Initial Patent Examination.

Frances Hicks
Petitions Examiner
Office of Petitions

UNITED STATES PATENT AND TRADEMARK OFFICE

Commissioner for Patents
United States Patent and Trademark Office
P.O. Box 1450
Alexandria, VA 22313-1450
www.uspto.gov

STEFAN KIRCHANSKI
LINER YANKELEVITZ SUNSHINE & REGENSTREIF LLP
1100 GLENDON AVENUE, 14TH FLOOR
LOS ANGELES, CA 90024

Paper No. 13

COPY MAILED

MAR 14 2006

OFFICE OF PETITIONS

In re Application of	:	
SHANBROM	:	
Application No. 10/412,003	:	DECISION ON PETITION
Filed: April 11, 2003	:	TO MAKE SPECIAL UNDER
Attorney Docket No. 355864.06100	:	37 CFR 1.102(c)(1)
	:	

This is a decision on the petition under 37 CFR 1.102(c)(1), filed December 30, 2005, to make the above-identified application special based on applicant's age as set forth in M.P.E.P. § 708.02, Section IV.

The petition is **GRANTED**.

A grantable petition to make an application special under 37 CFR 1.102(c)(1) and MPEP § 708.02, Section IV: Applicant's Age must be accompanied by evidence showing that at least one of the applicants is 65 years of age, or more, such as a birth certificate or a statement by applicant. No fee is required

The instant petition includes a statement by the applicant certifying to his date of birth (November 29, 1924). Accordingly, the above-identified application has been accorded "special" status.

Telephone inquiries concerning this decision should be directed to undersigned at 571-272-4787.

All other inquiries concerning either the examination or status of the application should be directed to the Technology Center.

The application is being forwarded to the Office of Initial Patent Examination for action on the merits commensurate with this decision.

Denise Pothier
Petitions Examiner
Office of Petitions

UNITED STATES PATENT AND TRADEMARK OFFICE

Commissioner for Patents
United States Patent and Trademark Office
P.O. Box 1450
Alexandria, VA 22313-1450
www.uspto.gov

COX SMITH MATTHEWS INCORPORATED
112 EAST PECAN STREET, SUITE 1800
SAN ANTONIO TX 78205-1521

COPY MAILED
DEC 17 2004
OFFICE OF PETITIONS

In re Application of	:	
Rao et al.	:	
Application No. 10/412,007	:	ON PETITION
Filed: April 11, 2003	:	
Attorney Docket No. 15727.236	:	

This is a decision on the petition under 37 CFR 1.78(a)(3), filed on October 6, 2004, to accept an unintentionally delayed claim under 35 USC 120 for the benefit of prior- filled nonprovisional Application 10/167,208 now patent 6,593,321 filed June 11, 2002.

The petition is **Dismissed As Moot** .

A petition under 37 CFR 1.78(a)(3) is only applicable to those applications filed on after November 29, 2000.

Along with the instant petition under 37 CFR 1.78(a)(3), petitioner has submitted an amendment to the first sentence of the specification following the title to include a reference that includes the relationship to the prior- filed application.

The instant pending nonprovisional application was filed on April 11, 2003 and was pending at the time of the filing of the instant petition. While a reference pursuant to 37 CFR 1.78(a)(2)(i) requires that any nonprovisional application must contain or be amended to contain a reference to each such prior-filed application, identifying it by application number (consisting of the series code and serial number) and indicating the relationship of the application to the prior-filed application was not included in the ADS or in the first sentence of the specification following the title, reference nevertheless was made in the transmittal letter filed with the above-identified application.

The current procedure where a claim for priority under 37 CFR 1.78(a)(3) is not

included in the first sentence of the specification or in the ADS but does appear either in the oath or declaration or a transmittal letter filed with the application and the Office notes the claim of priority, no petition will be required to accept a late claim for priority. This is because the application would have been scheduled for publication on the basis of the information submitted elsewhere in the application within the time period set forth in 37 CFR § 1.78 (a)(2)(ii). However, on the other hand, if the USPTO does not note the claim for priority to the prior filed application set forth in the oath or declaration or transmittal letter submitted with the application, a petition will be required to accept a late claim of priority under 37 CFR 1.78 (a)(3).

In view of the above, the $1370 petition fee submitted is unnecessary and will be refunded to petitioner's deposit account in due course.

Telephone inquiries concerning this matter may be directed to Petition Attorney Charlema R. Grant at (571) 272-3215.

Frances Hicks

Frances Hicks
Petition Examiner
Office of Petitions

UNITED STATES PATENT AND TRADEMARK OFFICE

UNITED STATES DEPARTMENT OF COMMERCE
United States Patent and Trademark Office
Address: COMMISSIONER FOR PATENTS
P.O. Box 1450
Alexandria, Virginia 22313-1450
www.uspto.gov

APPLICATION NO.	FILING DATE	FIRST NAMED INVENTOR	ATTORNEY DOCKET NO.	CONFIRMATION NO.
10/412,008	04/11/2003	David Watzke	09815180-0007	8080

26263 7590 03/19/2008
SONNENSCHEIN NATH & ROSENTHAL LLP
P.O. BOX 061080
WACKER DRIVE STATION, SEARS TOWER
CHICAGO, IL 60606-1080

EXAMINER
CASTELLANO, STEPHEN J

ART UNIT	PAPER NUMBER
3781	

MAIL DATE	DELIVERY MODE
03/19/2008	PAPER

Please find below and/or attached an Office communication concerning this application or proceeding.

The time period for reply, if any, is set in the attached communication.

UNITED STATES PATENT AND TRADEMARK OFFICE

BEFORE THE BOARD OF PATENT APPEALS
AND INTERFERENCES

Ex parte DAVID WATZKE and MAUREEN WATZKE

Appeal No. 2008-2209
Application No. 10,412,008

March 19, 2008

ORDER GRANTING PETITION

On April 11, 2003, appellants filed a Petition to Make Special their application under 37 C.F.R. § 1,102(c)(1), based on the poor health of Maureen Watzke.

Accordingly, it is

Appeal No. 2008-2209

Application No. 10,412,008

ORDERED that the Petition to Make Special filed on April 11, 2003, is GRANTED.

BOARD OF PATENT APPEALS
AND INTERFERENCES

By: /s/

Dale M. Shaw
Chief Appeal Administrator
(571) 272-9797

cc: Sonnenschein, Nath & Rosenthal, LLP
P.O. Box 061080
Wacker Drive Station, Sears Tower
Chicago, IL 60606-1080

UNITED STATES PATENT AND TRADEMARK OFFICE

COMMISSIONER FOR PATENTS
UNITED STATES PATENT AND TRADEMARK OFFICE
P.O. BOX 1450
ALEXANDRIA, VA 22313-1450
www.uspto.gov

Sonnenschein Nath & Rosenthal LLP
P.O. Box 061080
Wacker Drive Station
Sears Tower
Chicago, IL 60606-1080

In re Application of: Watzke et al.	)	
Application No. 10/412,008	)	
Attorney Docket No. 09815180-0007	)	DECISION ON PETITION TO
Filed: April 11, 2003	)	MAKE SPECIAL
For: DUAL CHAMBER SALAD	)	
CONTAINER	)	

This is a decision on the petition under 37 C.F.R. § 1.102(c)(1) and M.P.E.P. § 708.02, Section III: Applicant's Health, filed April 11, 2003, to make the above-identified application special.

A grantable petition to make special under 37 C.F.R. § 1.102(c)(1) and in accordance with M.P.E.P. § 708.02, Section III must be accompanied by any evidence "showing that the state of health of the applicant is such that he or she might not be available to assist in the prosecution of the application if it were to run its normal course…" . No fee is required for this petition.

The petition is accompanied by a declaration executed by one of the applicants, Maureen Watzke, regarding a serious health issue that might prevent her from assisting in the prosecution of an application if it were to run its normal course.

Accordingly, the petition is **GRANTED**. The application will be handled in accordance with the Office's guidelines for expedited prosecution. The Office regrets the delay in responding to this petition.

Applicants are also advised to review the correspondence address for this application to confirm the proper address is on file with the USPTO.

Josie Ballato
Special Programs Examiner
Technology Center 3700
Mechanical Engineering, Manufacturing, Products and Designs
(571) 272-3567

UNITED STATES PATENT AND TRADEMARK OFFICE

Commissioner for Patents
United States Patent and Trademark Office
P.O. Box 1450
Alexandria, VA 22313-1450
www.uspto.gov
DNW 01-05

APPLIED MEDICAL RESOURCES CORPORATION
22872 AVENIDA EMPRESA
RANCHO SANTA MARGARITA CA 92688

COPY MAILED

JAN 07 2005

OFFICE OF PETITIONS

In re Application of	:	
Hart et al.	:	
Application No. 10/412,016	:	ON PETITION
Filed: 11 April, 2003	:	
Att'y Docket No. ADIV-1650-AV	:	

This is a decision on the petition under 1.137(b),[1] filed on 14 September, 2004, to revive the above-identified application.

The petition is **DISMISSED**.

Any request for reconsideration of this decision must be submitted within TWO (2) MONTHS from the mail date of this decision. Extensions of time under 37 CFR 1.136(a) are permitted. The reconsideration request should include a cover letter entitled "Renewed Petition under 37 CFR 1.137(b)." This is not a final agency decision.

This application became abandoned on 11 September, 2003, for

---

[1]Effective December 1, 1997, the provisions of 37 CFR 1.137(b) now provide that where the delay in reply was unintentional, a petition may be filed to revive an abandoned application or a lapsed patent pursuant to 37 CFR 1.137(b). A grantable petition filed under the provisions of 37 CFR 1.137(b) must be accompanied by:

(1) the required reply, unless previously filed. In a nonprovisional application abandoned for failure to prosecute, the required reply may be met by the filing of a continuing application. In a nonprovisional application filed on or after June 8, 1995, and abandoned for failure to prosecute, the required reply may also be met by the filing of a request for continued examination in compliance with § 1.114. In an application or patent, abandoned or lapsed for failure to pay the issue fee or any portion thereof, the required reply must be the payment of the issue fee or any outstanding balance thereof. In an application abandoned for failure to pay the publication fee, the required reply must include payment of the publication fee.

(2) the petition fee as set forth in 37 CFR 1.17(m);

(3) a statement that the entire delay in filing the required reply from the due date for the reply until the filing of a grantable petition pursuant to 37 CFR 1.137(b) was unintentional. The Commissioner may required additional information where there is a question whether the delay was unintentional; and

(4) any terminal disclaimer (and fee as set forth in 37 CFR 1.20(d)) required pursuant to 37 CFR 1.137(c)).

failure to timely reply to the Notice to File Corrected Application Papers mailed on 10 July, 2003, which set a two (2) month shortened period for reply. No extensions of time under 37 CFR 1.136(a) were obtained. Notice of Abandonment was mailed 27 August, 2004.

Petitioner has submitted an amendment, including a new copy of Page 22 of the specification, as the reply.

The petition is dismissed because although petitioner has provided an amendment adding the page number to Page 21, a new copy of Page 21 containing the page number is required for processing. Therefore, the petition is dismissed without prejudice to reconsideration pending submission of a copy of Page 21 of the specification containing the page number as required by 37 CFR 1.52.

The petition fee of $1,330.00 has been charged to counsel's deposit account, No. 01-2215 as authorized on the fee transmittal sheet filed with the present petition.

Further correspondence with respect to this matter should be addressed as follows:

By mail: Mail Stop Petition
Commissioner for Patents
P.O. Box 1450
Alexandria, VA 22313-1450

By FAX: (703)872-9306
Attn: Office of Petitions

By hand: U.S. Patent and Trademark Office
220 20th Street S.
Customer Window, Mail Stop Petition
Crystal Plaza Two, Lobby, Room 1B03
Arlington, VA 22202

Telephone inquiries concerning this matter may be directed to the undersigned at (571)272-3231.

Douglas I. Wood
Senior Petitions Attorney
Office of Petitions

01/07/2005 HLE555 00000004 012215 10412016

01 FC:1453 1330.00 DA

THIS PAGE BLANK (USPTO)

UNITED STATES PATENT AND TRADEMARK OFFICE

Commissioner for Patents
United States Patent and Trademark Office
P.O. Box 1450
Alexandria, VA 22313-1450
www.uspto.gov
DIW 03-05

APPLIED MEDICAL RESOURCES CORPORATION
22872 AVENIDA EMPRESA
RANCHO SANTA MARGARITA CA 92688

COPY MAILED

MAR 17 2005

OFFICE OF PETITIONS

In re Application of	:	
Hart et al.	:	
Application No. 10/412,016	:	ON PETITION
Filed: 11 April, 2003	:	
Att'y Docket No. ADIV-1650-AV	:	

This is a decision on the renewed petition under 1.137(b),[1] filed on 23 February, 2005, to revive the above-identified application.

The petition is **GRANTED**.

This application became abandoned on 11 September, 2003, for failure to timely reply to the Notice to File Corrected Application Papers mailed on 10 July, 2003, which set a two (2) month shortened period for reply. No extensions of time under 37 CFR 1.136(a) were obtained. Notice of Abandonment was mailed 27 August, 2004. The petition under 37 CFR 1.137(b) filed on 14 September, 2004, was dismissed on 7 January, 2005.

---

[1]Effective December 1, 1997, the provisions of 37 CFR 1.137(b) now provide that where the delay in reply was unintentional, a petition may be filed to revive an abandoned application or a lapsed patent pursuant to 37 CFR 1.137(b). A grantable petition filed under the provisions of 37 CFR 1.137(b) must be accompanied by:

(1) the required reply, unless previously filed. In a nonprovisional application abandoned for failure to prosecute, the required reply may be met by the filing of a continuing application. In a nonprovisional application filed on or after June 8, 1995, and abandoned for failure to prosecute, the required reply may also be met by the filing of a request for continued examination in compliance with § 1.114. In an application or patent, abandoned or lapsed for failure to pay the issue fee or any portion thereof, the required reply must be the payment of the issue fee or any outstanding balance thereof. In an application abandoned for failure to pay the publication fee, the required reply must include payment of the publication fee.

(2) the petition fee as set forth in 37 CFR 1.17(m);

(3) a statement that the entire delay in filing the required reply from the due date for the reply until the filing of a grantable petition pursuant to 37 CFR 1.137(b) was unintentional. The Commissioner may required additional information where there is a question whether the delay was unintentional; and

(4) any terminal disclaimer (and fee as set forth in 37 CFR 1.20(d)) required pursuant to 37 CFR 1.137(c)).

Petitioner has now supplied a new copy of Page 21 of the specification, including the page number.

The application is being referred to the Office of Initial Patent Examination for further processing.

Telephone inquiries concerning this matter may be directed to the undersigned at (571)272-3231.

Douglas I. Wood
Senior Petitions Attorney
Office of Petitions

UNITED STATES PATENT AND TRADEMARK OFFICE

Commissioner for Patents
United States Patent and Trademark Office
P.O. Box 1450
Alexandria, VA 22313-1450
www.uspto.gov

BLAKELY SOKOLOFF TAYLOR & ZAFMAN
12400 WILSHIRE BOULEVARD
SEVENTH FLOOR
LOS ANGELES, CA 90025-1030

COPY MAILED

DEC 19 2006

OFFICE OF PETITIONS

In re Application of	:	
LEE, et al.	:	
Application No. 10/412,017	:	DECISION ON PETITION
Filed: April 11, 2003	:	TO WITHDRAW
Attorney Docket No. 3801P095	:	FROM RECORD
	:	

This is a decision on the Request to Withdraw as attorney or agent of record under 37 C.F.R. § 1.36(b), filed December 14, 2004.

The request is **NOT APPROVED** as moot.

A review of the file record indicates that the power of attorney to BLAKELY SOKOLOFF TAYLOR & ZAFMAN has been revoked by the assignee of the patent application on August 07, 2006. Accordingly, the request to withdraw under 37 C.F.R. § 1.36(b) is moot.

All future communications from the Office will continue to be directed to the address indicated below until otherwise notified by applicant.

Telephone inquires concerning this decision should be directed to Patricia Volpe at 571-272- 6825.

Patricia Volpe
Petitions Examiner
Office of Petitions

cc: SCHWEGMAN, LUNDBERG, WOESSNER & KLUTH/EBAY
P.O. BOX 2938
MINNEAPOLIS MN 55402

UNITED STATES PATENT AND TRADEMARK OFFICE

COMMISSIONER FOR PATENTS
UNITED STATES PATENT AND TRADEMARK OFFICE
P.O. BOX 1450
ALEXANDRIA, VA 22313-1450
WWW.USPTO.GOV

Paper No. 8

Peter J. Yim
Morrison & Foerster LLP
425 Market Street
San Francisco CA 94105-2482

COPY MAILED

FEB 1 9 2004

OFFICE OF PETITIONS

In re Application of
David Leroy Rand and Lloyd Alan Poston
Application No. 10/412,043
Filed: April 10, 2003
Attorney Docket No.: 249212024300
Title: RECOVERY OF DATA ON A PRIMARY DATA VOLUME

DECISION ON RENEWED PETITION UNDER 37 C.F.R. §1.47(A)

This is a decision on the renewed petition under 37 C.F.R. §1.47(a)[1], filed February 6, 2004.

The above-identified application was filed on April 10, 2003, identifying David Leroy Rand and Lloyd Alan Poston as joint inventors. On June 4, 2003, applicant was mailed a "Notice to File Missing Parts of Nonprovisional Application - Filing Date Granted" (Notice), requiring an executed oath or declaration in compliance with 37 C.F.R. §1.63 and a surcharge for its late filing. This Notice set a two-month period for reply.

Applicant filed the original petition (and fee), the surcharge associated with the late filing of an oath or declaration, and a four-month extension of time on December 4, 2003. On January 6, 2004, a Request for More Information was mailed, as the Petitioner asserted that the non-signing inventor both could not be found and refused to execute the declaration.

[1]A grantable petition under 37 C.F.R. §1.47(a) requires:

(1) the petition fee of $130;
(2) a surcharge of either $65 or $130 if the petition is not filed at the time of filing the application, as set forth in 37 CFR § 1.16(e);
(3) a statement of the last known address of the non-signing inventors;
(4) either
  a) proof that a copy of the entire application (specification, claims, drawings, and the oath or declaration) was sent or given to the non-signing inventor for review and proof that the non-signing inventor refuses to join in the application or
  b) proof that the non-signing inventor cannot be found or reached after diligent effort;
(5) a declaration which complies with 37 CFR §1.63.

With the renewed petition, Petitioner has asserted that non-signing inventor Poston has refused to join in the application.

Petitioner has met requirements (1) – (3) and (4) above. Regarding the third requirement, Petitioner has set forth that the current residential address is reflected on an attached Lexis printout. A review of the printout shows quite a few addresses in the "address summary" section, the most recent of which being 950 High School Way, Apt 3310, Mountain View, CA, 94041-1912.

Regarding the fourth requirement above, Petitioner has established that prior to filing, the non-signing inventor reviewed and approved the application[2]. On September 2, 2003 and November 4, 2003, letters were sent to the non-signing inventor along with the declaration and the assignment documents. On October 2, 2003, a letter was sent to the non-signing inventor. At no time was a complete copy of the application sent to the non-signing inventor[3]. Rule 47 applicants who assert that the non-signing inventor refuses to join must present a complete copy of the application to the last-known address of the non-signing inventor. It is not enough for the inventor to have seen the application at some time in the past.

Furthermore, none of these deliveries were sent to the last known address of the non-signing inventor. Although Petitioner never explicitly sets forth the last known address, it seems as though the Petitioner references "950 High School Way, Apt 3310, Mountain View, CA, 94041-1912" to be the last known address. The letter of September 2, 2003 was sent to "950 High School Way, Mountain View, CA, 94041," which is a different address in that it does not include the apartment number. The Federal Express tracking results show that for some reason, the package was delivered to a third address: "851 Church," and signed for by a D. Roberts. The letter of October 2, 2003 was delivered to the same address as the letter sent one month prior, and this time the package was delivered to "800 High School Way Apt," and signed for by an A. Roberts. Clearly, neither of these two mailings were delivered directly to the non-signing inventor. While it is possible that these Roberts individuals delivered the packages to the intended party, is it equally possible that they did not. The letter of November 4, 2003 was sent to "800 High School Way, #306, Mountain View, CA, 94041." No tracking results were supplied for this third mailing.

As none of the three mailings were either sent or delivered to the last known address, it is clear that not only was a complete copy of the application not sent, but the packages were not even sent to the correct address.

It follows that one cannot refuse to sign something which one has not been presented with. A refusal by an inventor to sign an oath or declaration when the inventor has not been presented with the application papers does not itself suggest that the inventor is refusing to join the application unless it is clear that the inventor understands exactly what he or she is being asked to sign and refuses to accept the application papers. It is reasonable to require that the inventor

2 Statement of facts of Declarant Yim, page 1.
3 The statement of facts of Declarant Bowers explicitly lists the contents of each of these three mailings.

be presented with the application papers before a petition under 37 CFR §1.47 is granted since such a procedure ensures that the inventor is apprised of the application to which the oath or declaration is directed[4].

For these reasons, the renewed petition under 37 C.F.R. §1.47(b) is **DISMISSED**.

Rule 47 applicant is given **TWO MONTHS** from the mailing date of this decision to reply, correcting the below-noted deficiencies. Any reply should be entitled "Second Renewed Petition Under 37 C.F.R. §1.47(a)," and should only address the deficiencies noted above, except that the reply may include an oath or declaration executed by the non-signing inventor[5]. **Failure to respond will result in abandonment of the application**. Any extensions of time will be governed by 37 C.F.R. §1.136(a).

The application file will be retained in the Office of Petitions for two (2) months.

The reply to this letter may be submitted by mail[6], hand-delivery[7], or facsimile[8].

The application file will be retained in the Office of Petitions for two (2) months.

Telephone inquiries regarding *this decision* should be directed to the undersigned at (703) 305-0011.

Paul Shanoski
Attorney
Office of Petitions
United States Patent and Trademark Office

4 In re Gray, 115 USPQ 80 (Comm'r Pat. 1956).
5 If the missing signature cannot be obtained, it is recommended that a complete copy of the application be sent to the last known address of the non-signing inventor.
6 Mail Stop Petition, Commissioner for Patents, United States Patent and Trademark Office, P.O. Box 1450, Alexandria, VA, 22313-1450.
7 Customer Window, Mail Stop Petition, Crystal Plaza Two, Lobby, Room 1B03, Arlington, Virginia 22202.
8 (703) 872-9306, attention Office of Petitions, Attorney Paul Shanoski.

UNITED STATES PATENT AND TRADEMARK OFFICE

COMMISSIONER FOR PATENTS
UNITED STATES PATENT AND TRADEMARK OFFICE
P.O. BOX 1450
ALEXANDRIA, VA 22313-1450
WWW.USPTO.GOV

Paper No. 10

Peter J. Yim
Morrison & Foerster LLP
425 Market Street
San Francisco CA 94105-2482

COPY MAILED

APR 2 8 2004

OFFICE OF PETITIONS

In re Application of David Leroy Rand and Lloyd Alan Poston Application No. 10/412,043 Filed: April 10, 2003 Attorney Docket No.: 249212024300 Title: RECOVERY OF DATA ON A PRIMARY DATA VOLUME	: : : : : : :	DECISION ON SECOND RENEWED PETITION UNDER 37 C.F.R. §1.47(A)

This is a decision on the renewed petition under 37 C.F.R. §1.47(a)[1], filed April 19, 2004.

The above-identified application was filed on April 10, 2003, identifying David Leroy Rand and Lloyd Alan Poston as joint inventors. On June 4, 2003, applicant was mailed a "Notice to File Missing Parts of Nonprovisional Application - Filing Date Granted" (Notice), requiring an executed oath or declaration in compliance with 37 C.F.R. §1.63 and a surcharge for its late filing. This Notice set a two-month period for reply.

Applicant filed the original petition (and fee), the surcharge associated with the late filing of an oath or declaration, and a four-month extension of time on December 4, 2003. On January 6, 2004, a Request for More Information was mailed, as the Petitioner asserted that the non-signing inventor both could not be found and refused to execute the declaration.

[1]A grantable petition under 37 C.F.R. §1.47(a) requires:

(1) the petition fee of $130;
(2) a surcharge of either $65 or $130 if the petition is not filed at the time of filing the application, as set forth in 37 CFR § 1.16(e);
(3) a statement of the last known address of the non-signing inventors;
(4) either
  a) proof that a copy of the entire application (specification, claims, drawings, and the oath or declaration) was sent or given to the non-signing inventor for review and proof that the non-signing inventor refuses to join in the application or
  b) proof that the non-signing inventor cannot be found or reached after diligent effort;
(5) a declaration which complies with 37 CFR §1.63.

With the renewed petition, submitted on February 6, 2004, Petitioner asserted that non-signing inventor Poston has refused to join in the application.

The renewed petition was dismissed via the mailing of a decision on February 19, 2004, for failure to meet the third and fifth requirements above. The decision set forth:

Petitioner has met requirements (1) – (3) and (4) above. Regarding the third requirement, Petitioner has set forth that the current residential address is reflected on an attached Lexis printout. A review of the printout shows quite a few addresses in the "address summary" section, the most recent of which being 950 High School Way, Apt 3310, Mountain View, CA, 94041-1912.

Regarding the fourth requirement above, Petitioner has established that prior to filing, the non-signing inventor reviewed and approved the application[2]. On September 2, 2003 and November 4, 2003, letters were sent to the non-signing inventor along with the declaration and the assignment documents. On October 2, 2003, a letter was sent to the non-signing inventor. At no time was a complete copy of the application sent to the non-signing inventor[3]. Rule 47 applicants who assert that the non-signing inventor refuses to join must present a complete copy of the application to the last-known address of the non-signing inventor. It is not enough for the inventor to have seen the application at some time in the past.

Furthermore, none of these deliveries were sent to the last known address of the non-signing inventor. Although Petitioner never explicitly sets forth the last known address, it seems as though the Petitioner references "950 High School Way, Apt 3310, Mountain View, CA, 94041-1912" to be the last known address. The letter of September 2, 2003 was sent to "950 High School Way, Mountain View, CA, 94041," which is a different address in that it does not include the apartment number. The Federal Express tracking results show that for some reason, the package was delivered to a third address: "851 Church," and signed for by a D. Roberts. The letter of October 2, 2003 was delivered to the same address as the letter sent one month prior, and this time the package was delivered to "800 High School Way Apt," and signed for by an A. Roberts. Clearly, neither of these two mailings were delivered directly to the non-signing inventor. While it is possible that these Roberts individuals delivered the packages to the intended party, is it equally possible that they did not. The letter of November 4, 2003 was sent to "800 High School Way, #306, Mountain View, CA, 94041." No tracking results were supplied for this third mailing.

As none of the three mailings were either sent or delivered to the last known address, it is clear that not only was a complete copy of the application not sent, but the packages were not even sent to the correct address.

It follows that one cannot refuse to sign something which one has not been presented with. A refusal by an inventor to sign an oath or declaration when the inventor has not been presented with the application papers does not itself suggest that the inventor is refusing to join the application unless it is clear that the inventor understands exactly what he or she is being asked to sign and refuses to accept the application papers. It is reasonable to require that the inventor be presented with the application papers before a petition under 37 CFR §1.47 is granted since such a procedure ensures that the inventor is apprised of the application to which the oath or declaration is directed[4].

With the second renewed petition, Petitioner has chosen not to address any of the deficiencies which were raised in the previous decision, and has merely reiterated that which has already been determined to be insufficient.

Regarding the third requirement above, no mention is made as to the last known address of the non-signing inventor.

---

2 Statement of facts of Declarant Yim, page 1.
3 The statement of facts of Declarant Bowers explicitly lists the contents of each of these three mailings.
4 In re Gray, 115 USPQ 80 (Comm'r Pat. 1956).

Regarding the fifth requirement above, Petitioner merely repeats the fact that a letter was sent from a third party to the non signing inventor at an apparently arbitrarily chosen address which does not even appear as a possible location on the long list of addresses provided by the Lexis search.

Petitioner concludes his second renewed petition with "Applicants believe that the deficiencies set forth in the Decision have been addressed, and respectfully request that the petition under 37 C.F.R. §1.47 be granted." Unfortunately, the Petitioner is wholly incorrect. He has chosen not to address either of the deficiencies mentioned in the previous decision, and as such, the second renewed petition under 37 C.F.R. §1.47(b) must be again **DISMISSED**.

Rule 47 applicant is given **TWO MONTHS** from the mailing date of this decision to reply, correcting the below-noted deficiencies. Any reply should be entitled "Third Renewed Petition Under 37 C.F.R. §1.47(a)," and should only address the deficiencies noted above, except that the reply may include an oath or declaration executed by the non-signing inventor, coupled with an explanation as to the last known address of the non-signing inventor. **Failure to respond will result in abandonment of the application**. Any extensions of time will be governed by 37 C.F.R. §1.136(a).

On second renewed petition, Petitioner might wish to consider first re-reading the previous decision and then:

- Revealing the last known address of the non-signing inventor. Providing a list of thirteen possible locations without specifying which location is the last known address clearly falls short of the requirements imposed by MPEP §409.03(e).
- Sending the application to the last known address of the non-signing joint inventor. Out of the thirteen addresses listed on the Lexis printout, Petitioner failed to indicate which of the thirteen was believed to be the last known address of the non-signing inventor. Mysteriously, Petitioner elected to have the application sent to a fourteenth address which does not appear on the list provided as possible candidates for the last known address. As this delivery address does not appear as a possible candidate for the last known address, it makes sense that a party other than the non-signing inventor signed for the package. Whether he delivered the package to the non-signing inventor is anyone's guess. Furthermore, for reasons that are equally unclear, the post office delivered the package to an address which differs in both number and street.
- Noting that the address listed on the declaration differs from that which the Petitioner has been sending his packages to. Perhaps the address on the declaration is incorrect? A new declaration might be required as well, depending on the resolution of this issue.

The reply should display "Please deliver to Paul Shanoski, c/o Office of Petitions" in a prominent manner. The Petitioner may wish to consider telephoning the undersigned at the number provided below to confirm that the documents were delivered to the undersigned. Please note that the delivery process within the PTO can take as much as three weeks.

The application file will be retained in the Office of Petitions for two (2) months.

Any renewed petition may be submitted by mail[5], hand-delivery[6], or facsimile[7].

Telephone inquiries regarding *this decision* should be directed to the undersigned at (703) 305-0011.

Paul Shanoski
Senior Attorney
Office of Petitions
United States Patent and Trademark Office

5 Mail Stop Petition, Commissioner for Patents, United States Patent and Trademark Office, P.O. Box 1450, Alexandria, VA, 22313-1450.
6 Customer Window, Mail Stop Petition, Crystal Plaza Two, Lobby, Room 1B03, Arlington, Virginia 22202.
7 (703) 872-9306 - please note this is a central facsimile number, and as such, there will be a delay in the delivery of the facsimile to the undersigned.

UNITED STATES PATENT AND TRADEMARK OFFICE

COMMISSIONER FOR PATENTS
UNITED STATES PATENT AND TRADEMARK OFFICE
P.O. BOX 1450
ALEXANDRIA, VA 22313-1450
WWW.USPTO.GOV

Paper No. 11

Peter J. Yim
Morrison & Foerster LLP
425 Market Street
San Francisco CA 94105-2482

COPY MAILED
SEP 0 2 2004
OFFICE OF PETITIONS

In re Application of
David Leroy Rand and Lloyd Alan Poston
Application No. 10/412,043
Filed: April 10, 2003
Attorney Docket No.: 249212024300
Title: RECOVERY OF DATA ON A PRIMARY DATA VOLUME

DECISION ON PETITION

This is a decision on the second renewed petition under 37 C.F.R. §1.47(a)[1], filed April 19, 2004.

The above-identified application was filed on April 10, 2003, identifying David Leroy Rand and Lloyd Alan Poston as joint inventors. On June 4, 2003, applicant was mailed a "Notice to File Missing Parts of Nonprovisional Application - Filing Date Granted" (Notice), requiring an executed oath or declaration in compliance with 37 C.F.R. §1.63 and a surcharge for its late filing. This Notice set a two-month period for reply.

Applicant filed the original petition (and fee), the surcharge associated with the late filing of an oath or declaration, and a four-month extension of time on December 4, 2003. On January 6, 2004, a Request for More Information was mailed, as the Petitioner asserted that the non-signing inventor both could not be found and refused to execute the declaration.
With the renewed petition, submitted on February 6, 2004, Petitioner asserted that non-signing inventor Poston has refused to join in the application.

---

[1]A grantable petition under 37 C.F.R. §1.47(a) requires:
(1) the petition fee of $130;
(2) a surcharge of either $65 or $130 if the petition is not filed at the time of filing the application, as set forth in 37 CFR § 1.16(e);
(3) a statement of the last known address of the non-signing inventors;
(4) either
a) proof that a copy of the entire application (specification, claims, drawings, and the oath or declaration) was sent or given to the non-signing inventor for review and proof that the non-signing inventor refuses to join in the application or
b) proof that the non-signing inventor cannot be found or reached after diligent effort;
(5) a declaration which complies with 37 CFR §1.63.

The renewed petition was dismissed via the mailing of a decision on February 19, 2004, for failure to meet the third and fifth requirements above.

On April 28, 2004, a decision was mailed which dismissed the instant petition, for failure to address any of the indicated reasons for dismissal.

On September 1, 2004, the undersigned spoke with the attorney of record, and it was pointed out to the undersigned that although a last known address was not given for the non-signing inventor, an attached federal express tracking receipt evinces actual receipt of the documents.

As such, the last known address will be inferred to be that on the letter which was received by the non-signing inventor: Lloyd Alan Poston, 800 High School Way #306, Mountain View, CA 94041

Unfortunately, this inference necessitates the dismissal of this petition. The address listed on the declaration is 950 High School Way, Mountain View, CA, 94041-1969. As the declaration contains an incorrect address for the non-signing inventor, the declaration is unacceptable.

For this reason, the second renewed petition under 37 C.F.R. §1.47(b) must be **DISMISSED**.

Rule 47 applicant is given **TWO MONTHS** from the mailing date of this decision to reply, correcting the below-noted deficiencies. Any reply should be entitled "Third Renewed Petition Under 37 C.F.R. §1.47(a)," and should include a declaration which lists the correct address for joint inventor Poston.

Failure to respond will result in abandonment of the application. Any extensions of time will be governed by 37 C.F.R. §1.136(a).

The reply to this letter may be submitted by mail[2], hand-delivery[3], or facsimile[4].

The application file will be retained in the Office of Petitions for two (2) months.

Telephone inquiries regarding this decision should be directed to the undersigned at (703) 305-0011. Please note that on approximately September 28, 2004, the Office of Petitions will relocate to the new PTO location in Alexandria. Although the mailing address will remain the same, the general phone number for the Office of Petitions which should be used for status requests will change to 571-272-3282, and the telephone number for the undersigned will change to 571-272-3225.

Paul Shanoski
Senior Attorney
Office of Petitions
United States Patent and Trademark Office

2 Mail Stop Petition, Commissioner for Patents, United States Patent and Trademark Office, P.O. Box 1450, Alexandria, VA, 22313-1450.
3 Customer Window, Mail Stop Petition, Crystal Plaza Two, Lobby, Room 1B03, Arlington, Virginia 22202.
4 (703) 872-9306, attention Office of Petitions, Attorney Paul Shanoski. Please note this is a central facsimile number, and as such, there may be a delay in the delivery of the facsimile to the undersigned. If this method of communication is chosen by the Petitioner, Petitioner may wish to consider telephoning the undersigned at the number provided above to ensure that the documents were delivered to the undersigned.

UNITED STATES PATENT AND TRADEMARK OFFICE

COMMISSIONER FOR PATENTS
UNITED STATES PATENT AND TRADEMARK OFFICE
P.O. BOX 1450
ALEXANDRIA, VA 22313-1450
WWW.USPTO.GOV

COPY MAILED

SEP 15 2004

OFFICE OF PETITIONS

Lloyd Alan Poston
800 High School Way #306
Mountain View, CA 94041.

In re Application of
David Leroy Rand and Lloyd Alan Poston
Application No. 10/412,043
Filed: April 10, 2003
Attorney Docket No.: 249212024300
Title: RECOVERY OF DATA ON A PRIMARY DATA VOLUME

DECISION ON PETITION

Dear Mr. Poston:

You are named as a joint inventor in the above-identified United States patent application filed under the provisions of 35 U.S.C. 116 (United States Code) and 37 CFR 1.47(a), Rules of Practice in Patent Cases. Should a patent be granted on the application you will be designated therein as a joint inventor.

As a named inventor you are entitled to inspect any paper in the file wrapper of the application, order copies of all or any part thereof (at a prepaid cost per 37 CFR 1.19) or make your position of record in the application. Alternatively, you may arrange to do any of the preceding through a registered patent attorney or agent presenting written authorization from you. If you care to join the application, the attorney of record below would presumably assist you. Joining in the application would entail the filing of an appropriate oath or declaration by you pursuant to 37 CFR 1.63.

Telephone inquiries regarding this communication should be directed to the undersigned at (703) 305-0011. Requests for information regarding your application should be directed to the File Information Unit at (703) 308-2733. Information regarding how to pay for and order a copy of the application, or a specific paper in the application, should be directed to the Certification Division at (703) 308-9726 or 1-800-972-6382 (outside the Washington D.C. area).

Paul Shanoski
Senior Attorney
Office of Petitions
United States Patent and Trademark Office

cc: Peter J. Yim
Morrison & Foerster LLP
425 Market Street
San Francisco CA 94105-2482

UNITED STATES PATENT AND TRADEMARK OFFICE

COMMISSIONER FOR PATENTS
UNITED STATES PATENT AND TRADEMARK OFFICE
P.O. BOX 1450
ALEXANDRIA, VA 22313-1450
WWW.USPTO.GOV

Paper No. 13

Peter J. Yim
Morrison & Foerster LLP
425 Market Street
San Francisco CA 94105-2482

COPY MAILED

SEP 1 5 2004

OFFICE OF PETITIONS

In re Application of
David Leroy Rand and Lloyd Alan Poston
Application No. 10/412,043
Filed: April 10, 2003
Attorney Docket No.: 249212024300
Title: RECOVERY OF DATA ON A PRIMARY DATA VOLUME

DECISION ON PETITION

This is a decision on the third renewed petition under 37 C.F.R. §1.47(a)[1], filed September 1, 2004[2].

The above-identified application was filed on April 10, 2003, identifying David Leroy Rand and Lloyd Alan Poston as joint inventors. On June 4, 2003, applicant was mailed a "Notice to File Missing Parts of Nonprovisional Application - Filing Date Granted" (Notice), requiring an executed oath or declaration in compliance with 37 C.F.R. §1.63 and a surcharge for its late filing. This Notice set a two-month period for reply.

Applicant filed the original petition (and fee), the surcharge associated with the late filing of an oath or declaration, and a four-month extension of time on December 4, 2003. On January 6,

[1]A grantable petition under 37 C.F.R. §1.47(a) requires:

(1) the petition fee of $130;
(2) a surcharge of either $65 or $130 if the petition is not filed at the time of filing the application, as set forth in 37 CFR § 1.16(e);
(3) a statement of the last known address of the non-signing inventors;
(4) either
  a) proof that a copy of the entire application (specification, claims, drawings, and the oath or declaration) was sent or given to the non-signing inventor for review and proof that the non-signing inventor refuses to join in the application or
  b) proof that the non-signing inventor cannot be found or reached after diligent effort;
(5) a declaration which complies with 37 CFR §1.63.

2 The instant petition was not delivered to the undersigned until September 14, 2004. This explains why the previous petition was dismissed subsequent to the filing of the instant petition.

2004, a Request for More Information was mailed, as the Petitioner asserted that the non-signing inventor both could not be found and refused to execute the declaration.

With the renewed petition, submitted on February 6, 2004, Petitioner asserted that non-signing inventor Poston has refused to join in the application. The renewed petition was dismissed via the mailing of a decision on February 19, 2004, for failure to meet the third and fifth requirements above.

The second renewed petition was filed April 19, 2004, and was dismissed via the mailing of a decision on April 28, 2004. On September 1, 2004, the undersigned spoke with the attorney of record, and it was set forth that the last known address should be inferred to be that on the letter which was received by the non-signing inventor: Lloyd Alan Poston, 800 High School Way #306, Mountain View, CA 94041. On September 2, 2004, a decision was mailed which dismissed the petition, as the declaration contained a different address.

With the third renewed petition, Petitioner has included a declaration which contains the correct address for the non-signing inventor.

As such, the above-identified application and papers have been reviewed and found in compliance with 37 CFR §1.47(a).

The petition is **GRANTED** and this application is hereby accorded Rule §1.47(a) status.

As provided in Rule §1.47(a), this Office will forward notice of this application's filing to the non-signing inventor at the address given in the petition. Notice of the filing of this application will also be published in the Official Gazette.

After this decision is mailed, the application will be forwarded to Technology Center 2100 for further processing.

Telephone inquiries regarding this decision should be directed to the undersigned at (703) 305-0011. Please note that on approximately September 28, 2004, the Office of Petitions will relocate to the new PTO location in Alexandria. Although the mailing address will remain the same, the general phone number for the Office of Petitions which should be used for status requests will change to 571-272-3282, and the telephone number for the undersigned will change to 571-272-3225.

Paul Shanoski
Senior Attorney
Office of Petitions
United States Patent and Trademark Office

UNITED STATES PATENT AND TRADEMARK OFFICE

COMMISSIONER FOR PATENTS
UNITED STATES PATENT AND TRADEMARK OFFICE
P.O. BOX 1450
ALEXANDRIA, VA 22313-1450
WWW.USPTO.GOV

RECEIVED

SEP 2 0 2004

MORRISON & FOERSTER LLP

Paper No. 13

Peter J. Yim
Morrison & Foerster LLP
425 Market Street
San Francisco CA 94105-2482

COPY MAILED

SEP 1 5 2004

OFFICE OF PETITIONS

In re Application of
David Leroy Rand and Lloyd Alan Poston
Application No. 10/412,043
Filed: April 10, 2003
Attorney Docket No.: 249212024300
Title: RECOVERY OF DATA ON A PRIMARY DATA VOLUME

DECISION ON PETITION

Best Available Copy

This is a decision on the third renewed petition under 37 C.F.R. §1.47(a)[1], filed September 1, 2004[2].

The above-identified application was filed on April 10, 2003, identifying David Leroy Rand and Lloyd Alan Poston as joint inventors. On June 4, 2003, applicant was mailed a "Notice to File Missing Parts of Nonprovisional Application - Filing Date Granted" (Notice), requiring an executed oath or declaration in compliance with 37 C.F.R. §1.63 and a surcharge for its late filing. This Notice set a two-month period for reply.

Applicant filed the original petition (and fee), the surcharge associated with the late filing of an oath or declaration, and a four-month extension of time on December 4, 2003. On January 6,

[1] A grantable petition under 37 C.F.R. §1.47(a) requires:
(1) the petition fee of $130;
(2) a surcharge of either $65 or $130 if the petition is not filed at the time of filing the application, as set forth in 37 CFR § 1.16(e);
(3) a statement of the last known address of the non-signing inventors;
(4) either
a) proof that a copy of the entire application (specification, claims, drawings, and the oath or declaration) was sent or given to the non-signing inventor for review and proof that the non-signing inventor refuses to join in the application or
b) proof that the non-signing inventor cannot be found or reached after diligent effort;
(5) a declaration which complies with 37 CFR §1.63.

2 The instant petition was not delivered to the undersigned until September 14, 2004. This explains why the previous petition was dismissed subsequent to the filing of the instant petition.

2004, a Request for More Information was mailed, as the Petitioner asserted that the non-signing inventor both could not be found and refused to execute the declaration.

With the renewed petition, submitted on February 6, 2004, Petitioner asserted that non-signing inventor Poston has refused to join in the application. The renewed petition was dismissed via the mailing of a decision on February 19, 2004, for failure to meet the third and fifth requirements above.

The second renewed petition was filed April 19, 2004, and was dismissed via the mailing of a decision on April 28, 2004. On September 1, 2004, the undersigned spoke with the attorney of record, and it was set forth that the last known address should be inferred to be that on the letter which was received by the non-signing inventor: Lloyd Alan Poston, 800 High School Way #306, Mountain View, CA 94041. On September 2, 2004, a decision was mailed which dismissed the petition, as the declaration contained a different address.

With the third renewed petition, Petitioner has included a declaration which contains the correct address for the non-signing inventor.

As such, the above-identified application and papers have been reviewed and found in compliance with 37 CFR §1.47(a).

The petition is **GRANTED** and this application is hereby accorded Rule §1.47(a) status.

As provided in Rule §1.47(a), this Office will forward notice of this application's filing to the non-signing inventor at the address given in the petition. Notice of the filing of this application will also be published in the Official Gazette.

After this decision is mailed, the application will be forwarded to Technology Center 2100 for further processing.

Telephone inquiries regarding this decision should be directed to the undersigned at (703) 305-0011. Please note that on approximately September 28, 2004, the Office of Petitions will relocate to the new PTO location in Alexandria. Although the mailing address will remain the same, the general phone number for the Office of Petitions which should be used for status requests will change to 571-272-3282, and the telephone number for the undersigned will change to 571-272-3225.

Paul Shanoski
Senior Attorney
Office of Petitions
United States Patent and Trademark Office

Best Available Copy

UNITED STATES PATENT AND TRADEMARK OFFICE

Commissioner for Patents
United States Patent and Trademark Office
P.O. Box 1450
Alexandria, VA 22313-1450
www.uspto.gov

ATTN: KIMBERLY DILIBERTI
ALLEGIANCE HEALTHCARE CORPORATION
1430 WAUKEGAN ROAD
MCGAW PARK IL 60085-6787

COPY MAILED

AUG 30 2007

OFFICE OF PETITIONS

In re Application of	:
Joel Donald Gray et al	:
Application No. 10/412,044	: DECISION GRANTING PETITION
Filed: April 11, 2003	: UNDER 37 CFR 1.137(b)
Attorney Docket No. 050251-0131D	:

This is a decision on the petition under 37 CFR 1.137(b), filed March 27, 2007, to revive the above-identified application.

The petition is **GRANTED**.

The petition satisfies the conditions for revival pursuant to the provisions of 37 CFR 1.137(b) in that (1) the reply in the form of an appeal; (2) the petition fee; and (3) the required statement of unintentional delay have been received. Accordingly, the reply to the Final Rejection of January 30, 2006, is accepted as having been unintentionally delayed.

An extension of time under 37 CFR 1.136 must be filed prior to the expiration of the maximum extendable period for reply. See In re Application of S., 8 USPQ2d 1630, 1631 (Comm'r Pats. 1988). Accordingly, since the $1,020 extension of time submitted with the petition on March 27, 2007 was subsequent to the maximum extendable period for reply, the fee is being credited to deposit account no. 50-0256 as authorized.

There is no indication that the person signing the instant petition was ever given a power of attorney or authorization of agent to prosecute the above-identified application. If the person signing the instant petition desires to receive future correspondence regarding this application, the appropriate power of attorney or authorization of agent must be submitted

Telephone inquiries concerning this decision should be directed to the undersigned at (571) 272-3208.

This matter is being referred to Technology Center AU 3738 for consideration of the Notice of Appeal filed March 27, 2007 and the Appeal Brief filed April 16, 2007.

Karen Creasy

Karen Creasy
Petitions Examiner
Office of Petitions

UNITED STATES PATENT AND TRADEMARK OFFICE

Commissioner for Patents
United States Patent and Trademark Office
P.O. Box 1450
Alexandria, VA 22313-1450
www.uspto.gov

MCANDREWS HELD & MALLOY, LTD.
500 WEST MADISON STREET
SUITE 3400
CHICAGO IL 60661

COPY MAILED

OCT 27 2006

OFFICE OF PETITIONS

In re Application of :
Shao-Chun Chen et al :
Application No. 10/412,045 : DECISION GRANTING PETITION
Filed: April 11, 2003 : UNDER 37 CFR 1.137(b)
Attorney Docket No. 13889US02 :

This is a decision on the petition, filed June 13, 2006, which is being treated as a petition under 37 CFR 1.137(b) to revive the instant nonprovisional application for failure to timely notify the U.S. Patent and Trademark (USPTO) of the filing of an application in a foreign country, or under a multinational treaty that requires publication of applications eighteen months after filing. *See* 37 CFR 1.137(f).

The petition is **GRANTED**.

Petitioner states that the instant nonprovisional application is the subject of an application filed in an eighteen month publication country on April 12, 2004. However, the USPTO was unintentionally not notified of this filing within 45 days subsequent to the filing of the subject application in an eighteen month publication country.

In view of the above, this application became abandoned pursuant to 35 U.S.C. § 122(b)(2)(B)(iii) and 37 CFR 1.213(c) for failure to timely notify the Office of the filing of an application in a foreign country or under a multilateral international agreement that requires publication of applications 18 months after filing.

A petition to revive an application abandoned pursuant to 35 U.S.C. 122(b)(2)(B)(iii) for failure to notify the USPTO of a foreign filing must be accompanied by:

(1) the required reply which is met by the notification of such filing in a foreign country or under a multinational treaty;
(2) the petition fee as set forth in 37 CFR 1.17(m); and
(3) a statement that the entire delay in filing the required reply from the due date of the reply until the filing of a grantable petition was unintentional.

The instant petition has been found to be in compliance with 37 CFR 1.137(b). Accordingly, the failure to timely notify the USPTO of a foreign or international filing within 45 days after the date of filing of such foreign or international application as provided by 35 U.S.C. § 122(b)(2)(B)(iii) and 37 CFR 1.213(c) is accepted as having been unintentionally delayed.

The previous Request and Certification under 35 U.S.C. § 122(b)(2)(B)(i) has been rescinded. A Notice Regarding Rescission of Nonpublication Request which sets forth the projected publication date of February 1, 2007, accompanies this decision on petition.

Any inquiries concerning this decision may be directed to the undersigned at (571) 272-3208.

This application is being referred to the Office of Initial Patent Examination.

Karen Creasy

Karen Creasy
Petitions Examiner
Office of Petitions

ATTACHMENT: Notice Regarding Rescission of Nonpublication Request

SPE RESPONSE FOR CERTIFICATE OF CORRECTION

Paper No.: —

DATE : 1/11/05

TO SPE OF : ART UNIT 3636

SUBJECT : Request for Certificate of Correction on Patent No.: 6783182 B1

A response is requested with respect to the accompanying request for a certificate of correction.

Please complete this form and return with file, within **7** days to:
Certificates of Correction Branch - PK 3-915
Palm location **7580** - Tel. No. 305-8309

With respect to the change(s) requested, correcting Office and/or Applicant's errors, should the patent read as shown in the certificate of correction? No new matter should be introduced, nor should the scope or meaning of the claims be changed.

Virginia Tolbert

Thank You For Your Assistance

Certificates of Correction Branch

The request for issuing the above-identified correction(s) is hereby:
Note your decision on the appropriate box.

- ☒ **Approved** — **All** changes apply.
- ☐ **Approved in Part** — Specify below which changes **do not** apply.
- ☐ **Denied** — State the reasons for denial below.

Comments:

SPE

3636
Art Unit

SPE RESPONSE FOR CERTIFICATE OF CORRECTION

Paper No.: _____

DATE : 04/29/06

TO SPE OF : ART UNIT 3673

SUBJECT : Request for Certificate of Correction for Appl. No.: 10/412075 Patent No.: 7000276

Please respond to this request for a certificate of correction within 7 days.

Please review the requested changes/corrections as shown in the **COCIN** document(s) in the IFW application image. No new matter should be introduced, nor should the scope or meaning of the claims be changed.

Please complete the response (see below) and forward the completed response to scanning using document code **COCX**.

Certificates of Correction Branch

703-308-9390 ext. 123

Thank You For Your Assistance

The request for issuing the above-identified correction(s) is hereby:

Note your decision on the appropriate box.

- ☐ **Approved** — **All** changes apply.
- ☒ **Approved in Part** — Specify below which changes **do not** apply.
- ☐ **Denied** — State the reasons for denial below.

Comments: After col. 6 line 41, the paragraph which is to be inserted is denied because the features in Figs. 5-6 do not include a planar membrane at controlled intervals attached to the bladder and a material that has a stable length to width ratio. Since such language was never previously described and/or shown the subject matter is considered new and is denied entry.

SS. 3673

SPE **Art Unit**

SPE RESPONSE FOR CERTIFICATE OF CORRECTION

Paper No.: _____

DATE : 10/06/06

TO SPE OF : ART UNIT 3673

SUBJECT : Request for Certificate of Correction for Appl. No.: **10/412075** Patent No.: **7000276**

Please respond to this request for a certificate of correction within 7 days.

Please review the requested changes/corrections as shown in the **COCIN** document(s) in the IFW application image. No new matter should be introduced, nor should the scope or meaning of the claims be changed.

Please complete the response (see below) and forward the completed response to scanning using document code **COCX**.

Angela Green
Certificates of Correction Branch
703.308.9380 ext. 123

Thank You For Your Assistance

The request for issuing the above-identified correction(s) is hereby:
Note your decision on the appropriate box.

- ☒ **Approved** — All changes apply.
- ☐ **Approved in Part** — Specify below which changes **do not** apply.
- ☐ **Denied** — State the reasons for denial below.

Comments: _____

SPE

3673
Art Unit

11/1/6

SPE RESPONSE FOR CERTIFICATE OF CORRECTION

Paper No.: _____

DATE : 10/06/06

TO SPE OF : ART UNIT 3673

SUBJECT : Request for Certificate of Correction for Appl. No.: **10/412075** Patent No.: **7000276**

Please respond to this request for a certificate of correction within 7 days.

Please review the requested changes/corrections as shown in the **COCIN** document(s) in the IFW application image. No new matter should be introduced, nor should the scope or meaning of the claims be changed.

Please complete the response (see below) and forward the completed response to scanning using document code **COCX**.

Angela Green
Certificates of Correction Branch
703.308.9380 ext. 123

Thank You For Your Assistance

The request for issuing the above-identified correction(s) is hereby:
Note your decision on the appropriate box.

- ☒ **Approved** — All changes apply.
- ☐ **Approved in Part** — Specify below which changes do not apply.
- ☐ **Denied** — State the reasons for denial below.

Comments: _____

SPE

3673
Art Unit

UNITED STATES PATENT AND TRADEMARK OFFICE

UNITED STATES DEPARTMENT OF COMMERCE
United States Patent and Trademark Office
Address: COMMISSIONER FOR PATENTS
P.O. Box 1450
Alexandria, Virginia 22313-1450
www.uspto.gov

KAGAN BINDER, PLLC
SUITE 200, MAPLE ISLAND BUILDING
221 MAIN STREET NORTH
STILLWATER, MN 55082

Mail Date: 04/21/2010

Applicant	: Stephen J. Chudzik	: DECISION ON REQUEST FOR
Patent Number	: 7585499	: RECALCULATION of PATENT
Issue Date	: 09/08/2009	: TERM ADJUSTMENT IN VIEW
Appliction No	: 10/412,081	: OF WYETH AND NOTICE OF INTENT TO
Filed	: 04/10/2003	: ISSUE CERTIFICATE OF CORRECTION
		:

The Request for Recalculation is **GRANTED** to the extent indicated.

The patent term adjustment has been determined to be **629** days. The USPTO will *sua sponte* issue a certificate of correction reflecting the amount of PTA days determined by the recalculation.

Prior to the issuance of the certificate of correction, the USPTO will afford patentee an opportunity to be heard and request reconsideration. Accordingly, patentee has **one month or thirty (30) days**, whichever is longer, to file a request for reconsideration of this patent term adjustment calculation. See 35 U.S.C. 154(b)(3)(B)(ii) and 37 CFR 1.322(a)(4). No extensions of time will be granted under 37 CFR 1.136.

Patentee should use document code PET.OP if electronically filing a request for reconsideration of this patent term adjustment calculation. The patentee must also include the information required by 37 CFR 1.705(b)(2) and the fee required by 37 CFR 1.18(e). If patentee does not file a timely request for reconsideration of this patent term adjustment calculation including the information required by 37 CFR 1.705(b)(2) and the fee required by 37 CFR 1.18(e), the USPTO will issue a certificate of correction reflecting the PTA determination noted above.

Patentee should be aware that in order to preserve the right to review in the United States District Court for the District of Columbia of the USPTO patent term adjustment determination, patentee must ensure that he or she also take the steps required under 35 U.S.C. 154(b)(4)(A) in a timely manner. Nothing in the request for recalculation should be construed as providing an alternative time frame for commencing a civil action under 35 U.S.C. 154(b)(4)(A).

Any questions concerning this decision should be directed to the Office of Patent Legal Administration at 571-272-7702.

UNITED STATES PATENT AND TRADEMARK OFFICE

Commissioner for Patents
United States Patent and Trademark Office
P.O. Box 1450
Alexandria, VA 22313-1450
www.uspto.gov

Mailed: 2-27-06

dss

In re application of
John P. Zazzara Sr. et al.
Serial No. 10/412,084
For: 911 THREE FLASHLIGHTS IN ONE

DECISION ON PETITION

This is a response to the Letter, filed October 21, 2005. The letter requests that the abandonment, as set forth in the Notice of Abandonment of September 30, 2005, for failure to timely file a proper reply to the Office letter mailed October 05, 2004 be withdrawn. The requestor asserts that the Office letter mailed January 14, 2005 was not received at the applicant's correspondence address.

DECISION

Since the requestor asserts that the applicant did not receive the Office letter mailed January 14, 2005, the request is accepted as a petition under 37 C.F.R. § 1.181 (no fee) and is evaluated under the procedures regarding an acceptable showing of non-receipt of an office action, MPEP § 711.03(c).

A review of the instant application file reveals that the Notice of Abandonment was withdrawn in the FINAL office action mailed February 06, 2006.

In view of the fact that the abandonment was previously withdrawn, a FINAL office action was mailed on February 06, 2006, and the application has been returned to pending status,
The petition is **DISMISSED**.

Jacqueline M. Stone

Jacqueline Stone, Director
Technology Center 1700
Chemical and Materials Engineering

John P. Zazzara Sr.
203 Oak Manor Parkway
South Plainfield, N.J. 07080

UNITED STATES PATENT AND TRADEMARK OFFICE

Commissioner for Patents
United States Patent and Trademark Office
P.O. Box 1450
Alexandria, VA 22313-1450
www.uspto.gov

Chun-Pok Leung
TOWNSEND and TOWNSEND and CREW LLP
Two Embarcadero Center, 8th Floor
San Francisco, California 94111-3834

MAILED

APR 03 2006

Technology Center 2100

In re Application of:
Masanori HONDA et al
Application No. 10/412,092
Filed: April 10, 2003
For: JOB NETWORK SETUP METHOD, JOB NETWORK EXECUTION METHOD, JOB MANAGEMENT SYSTEM, MANAGEMENT TERMINAL AND PROGRAM

DECISION ON PETITION TO MAKE SPECIAL

This is a decision on the petition, filed on 06, October 2005 under 37 C.F.R. §102(d) and M.P.E.P. § 708.02(VIII): Accelerated Examination, to make the above-identified application special.

The petition is **GRANTED**.

M.P.E.P. § 708.02, Section VIII which sets out the prerequisites for a grantable petition for Accelerated Examination under 37 C.F.R. § 102(d) states in relevant part:

> A new application (one which has not received any examination by the examiner) may be granted special status provided that applicant (and this term includes applicant's attorney or agent) complies with each of the following items:
>
> (A) Submits a petition to make special accompanied by the fee set forth in 37 CFR 1.17(h);
>
> (B) Presents all claims directed to a single invention, or if the Office determines that all the claims presented are not obviously directed to a single invention, will make an election without traverse as a prerequisite to the grant of special status;
>
> (C) Submits a statement(s) that a pre-examination search was made, listing the field of search by class and subclass, publication, Chemical Abstracts, foreign patents, etc. A search made by a foreign patent office satisfies this requirement;
>
> (D) Submits one copy each of the references deemed most closely related to the subject matter encompassed by the claims if said references are not already of record; and
>
> (E) Submits a detailed discussion of the references, which discussion points out, with the particularity required by 37 CFR 1.111 (b) and (c), how the claimed subject matter is patentable over the references.

Applicant's submission of 06 October 2005 meets all the criteria set out above. Accordingly, the petition is **GRANTED**. The application file is being forwarded to the Examiner for accelerated examination in accordance with M.P.E.P. § 708.02. If the application is subsequently allowed, it will be given priority for printing. See M.P.E.P. § 1309.

Vincent N. Trans
Special Program Examiner
Technology Center 2100
Computer Architecture, Software, and
Information Security
571-272-3613

UNITED STATES PATENT AND TRADEMARK OFFICE

UNITED STATES DEPARTMENT OF COMMERCE
United States Patent and Trademark Office
Address: COMMISSIONER FOR PATENTS
P.O. Box 1450
Alexandria, Virginia 22313-1450
www.uspto.gov

ROBINS & PASTERNAK
1731 EMBARCADERO ROAD
SUITE 230
PALO ALTO, CA 94303

Mail Date: 04/21/2010

Applicant	: Casey Case	: DECISION ON REQUEST FOR
Patent Number	: 7045304	: RECALCULATION of PATENT
Issue Date	: 05/16/2006	: TERM ADJUSTMENT IN VIEW
Appliction No	: 10/412,109	: OF WYETH
Filed	: 04/10/2003	:
		:

The Patentee's Request for Recalculation is **DISMISSED.**

This Request is deemed ineligible for consideration for one or more of the following reasons:

(A). The patent for which PTA recalculation is requested is either a design or reissue application or is a reexamination proceeding;

(B). The patent for which PTA recalculation is requested resulted from a utility or plant application filed under 35 USC 111(a) before May 29, 2000 and no CPA filed in the application on/after May 29, 2000;

(C). The patent for which PTA recalculation is requested resulted from an international application in which the international filing date was before May 29, 2000 and no CPA filed in the application on/after May 29, 2000;

(D). The patent for which PTA recalculation is requested issued on/after March 2, 2010;

(E). The Request for Recalculation was filed more than 180 days after the grant date of the patent and the request was not filed within two months of a dismissal of a request for reconsideration of the of the patent term under 37 CFR 1.705(d);

(F). The Request for Recalculation is not solely limited to USPTO pre-Wyeth interpretation of 35 U.S.C. 154(b)(2)(A);

or

(G). A civil action was filed pursuant to 35 U.S.C. 154(b)(4)(A)concerning the same patent at issue in this request.

Patentee may file a reply to this decision dismissing the Request for Recalculation. Patentee must file such reply within one month or thirty days, whichever is longer, of the mail date of the decision dismissing the Request for Recalculation. No fee is required if patentee is asserting in the reply that the dismissal for ineligibility is improper.

Patentee should use document code PET.OP if electronically filing a reply to this dismissal. If the USPTO finds that the request was improperly deemed ineligible, the USPTO will mail applicant a recalculation determination.

Patentee should be aware that in order to preserve the right to review in the United States District Court for the District of Columbia of the USPTO patent term adjustment determination, patentee must ensure that he or she also take the steps required under 35 U.S.C. 154(b)(4)(A). Nothing in the request for recalculation should be construed as providing an alternative time frame for commencing a civil action under 35 U.S.C. 154 (b)(4)(A).

Any questions concerning this decision should be directed to the Office of Patent Legal Administration at 571-272-7702.

UNITED STATES PATENT AND TRADEMARK OFFICE

COMMISSIONER FOR PATENTS
UNITED STATES PATENT AND TRADEMARK OFFICE
P.O. BOX 1450
ALEXANDRIA, VA 22313-1450
www.uspto.gov

Paper No. 8

JAY L CHASKIN
CANTOR COLBURN LLP
55 GRIFFIN ROAD SOUTH
BLOOMFIELD, CT 06002

COPY MAILED

MAR 1 7 2004

OFFICE OF PETITIONS

In re Application of	:	
Serge Muller, et al.	:	
Application No. 10/412,113	:	ON PETITION
Filed: April 11, 2003	:	
Attorney Docket No. 14XZ125704	:	

This is a decision on the petition under 37 CFR 1.137(b), filed February 20, 2004, to revive the above-identified application.

The petition is **GRANTED.**

The above-identified application became abandoned for failure to reply in a timely manner to the Notice to File Missing Parts of Nonprovisional Application mailed June 4, 2003. The Notice set a period for reply of two (2) months from the mail date of the Notice. No extensions of time under the provisions of 37 CFR 1.136(a) were obtained. Accordingly, the above-identified application became abandoned on August 5, 2003.

The Change of Correspondence Address has been accepted and recorded.

Telephone inquiries concerning this decision should be directed to the undersigned at (703) 306-5594.

The application file is being forwarded to the Office of Initial Patent Examination for further processing.

Retta Williams

Retta Williams
Petitions Examiner
Office of Petitions
Office of the Deputy Commissioner
for Patent Examination Policy

UNITED STATES PATENT AND TRADEMARK OFFICE

Commissioner for Patents
United States Patent and Trademark Office
P.O. Box 1450
Alexandria, VA 22313-1450
www.uspto.gov

DAVID L. FEHRMAN
MORRISON & FOERSTER LLP
35TH FLOOR
555 W. 5TH STREET
LOS ANGELES, CA 90013

COPY MAILED

APR 25 2008

OFFICE OF PETITIONS

In re Application of :
Tsuyoshi Futamase et al :
Application No. 10/412,131 : ON PETITION
Filed: April 11, 2003 :
Attorney Docket No. 393032016810

This is a decision on the petition, filed April 23, 2008 under 37 CFR 1.313(c)(2) to withdraw the above-identified application from issue after payment of the issue fee.

The petition is **GRANTED**.

The above-identified application is withdrawn from issue for consideration of a submission under 37 CFR 1.114 (request for continued examination). See 37 CFR 1.313(c)(2).

Petitioner is advised that the issue fee paid on March 5, 2008 in the above-identified application cannot be refunded. If, however, the above-identified application is again allowed, petitioner may request that it be applied towards the issue fee required by the new Notice of Allowance.[1]

Telephone inquiries should be directed to Irvin Dingle at (571) 272-3210.

This matter is being referred to Technology Center AU 2837 for processing of the request for continued examination under 37 CFR 1.114 and for consideration of the concurrently filed Information Disclosure Statement.

Irvin Dingle
Petitions Examiner
Office of Petitions

---

[1] The request to apply the issue fee to the new Notice may be satisfied by completing and returning the new Issue Fee Transmittal Form PTOL-85(b), which includes the following language thereon: Commissioner for Patents is requested to apply the Issue Fee and Publication Fee (if any) or re-apply any previously paid issue fee to the application identified above. Petitioner is advised that, whether a fee is indicated as being due or not, the Issue Fee Transmittal Form **must** be completed and timely submitted to avoid abandonment. Note the language in bold text on the first page of the Notice of Allowance and Fee(s) Due (PTOL-85).

UNITED STATES PATENT AND TRADEMARK OFFICE

Commissioner for Patents
United States Patent and Trademark Office
P.O. Box 1450
Alexandria, VA 22313-1450
www.uspto.gov

DAVID L. FEHRMAN
MORRISON & FOERSTER LLP
35TH FLOOR
555 W. 5TH STREET
LOS ANGELES CA 90013

COPY MAILED

NOV 0 7 2008

OFFICE OF PETITIONS

In re Application of	:	
Tsuyoshi Futamase et al	:	
Application No. 10/412,131	:	DECISION GRANTING PETITION
Filed: April 11, 2003	:	UNDER 37 CFR 1.313(c)(2)
Attorney Docket No. 393032016810	:	

This is a decision on the petition under 37 CFR 1.313(c)(2), filed November 5, 2008, to withdraw the above-identified application from issue after payment of the issue fee.

The petition is **GRANTED**.

The above-identified application is withdrawn from issue for consideration of a submission under 37 CFR 1.114 (request for continued examination). *See* 37 CFR 1.313(c)(2).

Petitioner is advised that the issue fee paid on August 18, 2008 cannot be refunded. If, however, this application is again allowed, petitioner may request that it be applied towards the issue fee required by the new Notice of Allowance.[1]

Telephone inquiries should be directed to the undersigned at (571) 272-3208.

This application is being referred to Technology Center AU 2837 for processing of the request for continued examination under 37 CFR 1.114 and for consideration of the concurrently filed IDS.

/Karen Creasy/
Karen Creasy
Petitions Examiner
Office of Petitions

---

[1] *The request to apply the issue fee to the new Notice may be satisfied by completing and returning the new Part B – Fee(s) Transmittal Form (along with any balance due at the time of submission). Petitioner is advised that the Issue Fee Transmittal Form must be completed and timely submitted to avoid abandonment of the application.*

UNITED STATES PATENT AND TRADEMARK OFFICE

Commissioner for Patents
United States Patent and Trademark Office
P.O. Box 1450
Alexandria, VA 22313-1450
www.uspto.go

BRADLEY N. RUBEN, PC
463 FIRST STREET
SUITE 5A
HOBOKEN NJ 07030-1859

COPY MAILED
MAY 24 2006
OFFICE OF PETITIONS

In re Application of
Steven A. Zettel et al.
Application No. 10/412,150
Filed: April 11, 2003
Attorney Docket No. 101AC-020R

DECISION ON PETITION
UNDER 37 CFR 1.55(c)

This is a decision on the petition under 37 CFR 1.55(c), filed February 8, 2006, for acceptance of an unintentionally delayed claim under 35 U.S.C. § 119(a)-(d) for benefit of the filing date of United Kingdom Patent Application No. GB9827576 filed on December 15, 1998.

This pending nonprovisional application was filed after November 29, 2000, and did not include a reference to the foreign application, for which benefit is now sought, within the later of four months from the actual filing date of the application or sixteen months from the filing date of the prior foreign application. Since the claim for priority is submitted after the period specified in 37 CFR 1.55(a)(1)(i), this is an appropriate petition under the provisions of 37 CFR 1.55(c).

A petition under 37 CFR 1.55(c) to accept an unintentionally delayed claim for priority requires:

(1) The nonprovisional application claiming the benefit of an earlier filing date must be filed on or after November 29, 2000;

(2) the claim submitted with the petition must identify the prior foreign application for which priority is claimed, as well as any foreign application for the same subject matter and having a filing date before that of the application for which priority is claimed, by the application number, country, and the filing date **and be included either in an oath or declaration (37 CFR 1.63(c)(2)) or in an Application Data Sheet (37 CFR 1.76(b)(6);**

(3) the surcharge as set forth in 37 CFR 1.17(t);

(4) a statement that the entire delay between the date the claim was due under 37 CFR 1.55(a)(1) and the date the claim was filed was unintentional. (The Commissioner may require additional information where there is a question whether the delay was unintentional); and

(5) the above-identified nonprovisional application or an intermediate nonprovisional application must be filed within 12 months of the filing date of the foreign application.

The instant application is a reissue of application no. 09/282,372 which was filed March 31, 1999, within twelve months of December 15, 1998, the filing date of the foreign application. The instant application was filed April 11, 2003, which is after November 29, 2000. On February 4, 2005, an Application Data Sheet was received which identifies the foreign application for which priority is claimed by application number, country and filing date. The required petition fee of $1370 was received with the petition. Lastly, petitioner has provided an adequate statement of unintentional delay.

All requirements being met, the petition under 37 CFR 1.55(c) to accept an unintentionally delayed claim for priority under 35 U.S.C. § 119(a)-(d) is **GRANTED**.

The granting of the petition to accept the delayed benefit claim to the prior-filed application(s) under 37 CFR 1.55(c) should not be construed as meaning that this application is entitled to the benefit of the prior-filed application(s). In order for this application to be entitled to the benefit of the prior-filed application(s), all other requirements under 35 U.S.C. §119(a)-(d) and 37 CFR 1.55(a)(1) must be met. Similarly, the fact that the corrected Filing Receipt accompanying this decision on petition includes the prior-filed application(s) should not be construed as meaning that applicant is entitled to the claim for benefit of priority to the prior-filed application(s) noted thereon. Accordingly, the examiner will, in due course, consider this benefit claim and determine whether this application is entitled to the benefit of the earlier filing date.

A Corrected Filing Receipt, which reflects the above-noted foreign application, accompanies this decision on petition.

This matter is being referred to Technology Center AU 1724.

Any inquiries directly pertaining to this matter may be directed to Senior Petitions Attorney Patricia Faison-Ball at (571) 272-3212.

Frances Hicks
Petitions Examiner
Office of Petitions

ATTACHMENT: Corrected Filing Receipt

UNITED STATES PATENT AND TRADEMARK OFFICE

UNITED STATES DEPARTMENT OF COMMERCE
United States Patent and Trademark Office
Address: COMMISSIONER FOR PATENTS
P.O. Box 1450
Alexandria, Virginia 22313-1450
www.uspto.gov

APPL NO.	FILING OR 371 (c) DATE	ART UNIT	FIL FEE REC'D	ATTY.DOCKET NO	DRAWINGS	TOT CLMS	IND CLMS
10/412,150	04/11/2003	1724	1132	101AC-020R	4	12	5

CONFIRMATION NO. 1307
CORRECTED FILING RECEIPT
OC000000018838918
OC000000018838918

Bradley N. Ruben, PC
463 First Street
Suite 5A
Hoboken, NJ 07030-1859

Date Mailed: 05/17/2006

Receipt is acknowledged of this reissue Patent Application. It will be considered in its order and you will be notified as to the results of the examination. Be sure to provide the U.S. APPLICATION NUMBER, FILING DATE, NAME OF APPLICANT, and TITLE OF INVENTION when inquiring about this application. Fees transmitted by check or draft are subject to collection. Please verify the accuracy of the data presented on this receipt. **If an error is noted on this Filing Receipt, please mail to the Commissioner for Patents P.O. Box 1450 Alexandria Va 22313-1450. Please provide a copy of this Filing Receipt with the changes noted thereon. If you received a "Notice to File Missing Parts" for this application, please submit any corrections to this Filing Receipt with your reply to the Notice. When the USPTO processes the reply to the Notice, the USPTO will generate another Filing Receipt incorporating the requested corrections (if appropriate).**

Applicant(s)

Steven A. Zettel, Cranston, RI;
Raymond Scoboria, Dearborn, MI;

Power of Attorney:

Bradley Ruben--32058

Domestic Priority data as claimed by applicant

This application is a REI of 09/282,372 03/31/1999 PAT 6,277,166

Foreign Applications	Acceptable Request to Retrieve Priority Application Received?
UNITED KINGDOM 9827576 12/15/1998	NO

If Required, Foreign Filing License Granted: 06/09/2003

The country code and number of your priority application, to be used for filing abroad under the Paris Convention, is US10/412,150

Projected Publication Date: None, application is not eligible for pre-grant publication

Non-Publication Request: No

Early Publication Request: No

Title

Filter with stiffening ribs

Preliminary Class

055

PROTECTING YOUR INVENTION OUTSIDE THE UNITED STATES

Since the rights granted by a U.S. patent extend only throughout the territory of the United States and have no effect in a foreign country, an inventor who wishes patent protection in another country must apply for a patent in a specific country or in regional patent offices. Applicants may wish to consider the filing of an international application under the Patent Cooperation Treaty (PCT). An international (PCT) application generally has the same effect as a regular national patent application in each PCT-member country. The PCT process **simplifies** the filing of patent applications on the same invention in member countries, but **does not result** in a grant of "an international patent" and does not eliminate the need of applicants to file additional documents and fees in countries where patent protection is desired.

Almost every country has its own patent law, and a person desiring a patent in a particular country must make an application for patent in that country in accordance with its particular laws. Since the laws of many countries differ in various respects from the patent law of the United States, applicants are advised to seek guidance from specific foreign countries to ensure that patent rights are not lost prematurely.

Applicants also are advised that in the case of inventions made in the United States, the Director of the USPTO must issue a license before applicants can apply for a patent in a foreign country. The filing of a U.S. patent application serves as a request for a foreign filing license. The application's filing receipt contains further information and guidance as to the status of applicant's license for foreign filing.

Applicants may wish to consult the USPTO booklet, "General Information Concerning Patents" (specifically, the section entitled "Treaties and Foreign Patents") for more information on timeframes and deadlines for filing foreign patent applications. The guide is available either by contacting the USPTO Contact Center at 800-786-9199, or it can be viewed on the USPTO website at http://www.uspto.gov/web/offices/pac/doc/general/index.html.

For information on preventing theft of your intellectual property (patents, trademarks and copyrights), you may wish to consult the U.S. Government website, http://www.stopfakes.gov, Part of a Department of Commerce initiative, this website includes self-help "toolkits" giving innovators guidance on how to protect intellectual property in specific countries such as China, Korea and Mexico. For questions regarding patent enforcement issues, applicants may call the U.S. Government hotline at 1-866-999-HALT (1-866-999-4158).

LICENSE FOR FOREIGN FILING UNDER
Title 35, United States Code, Section 184
Title 37, Code of Federal Regulations, 5.11 & 5.15

GRANTED

The applicant has been granted a license under 35 U.S.C. 184, if the phrase "IF REQUIRED, FOREIGN FILING LICENSE GRANTED" followed by a date appears on this form. Such licenses are issued in all applications where the conditions for issuance of a license have been met, regardless of whether or not a license may be required as set forth in 37 CFR 5.15. The scope and limitations of this license are set forth in 37 CFR 5.15(a) unless an earlier license has been issued under 37 CFR 5.15(b). The license is subject to revocation upon written notification. The date indicated is the effective date of the license, unless an earlier license of similar scope has been granted under 37 CFR 5.13 or 5.14.

This license is to be retained by the licensee and may be used at any time on or after the effective date thereof unless it is revoked. This license is automatically transferred to any related applications(s) filed under 37 CFR 1.53(d). This license is not retroactive.

The grant of a license does not in any way lessen the responsibility of a licensee for the security of the subject matter as imposed by any Government contract or the provisions of existing laws relating to espionage and the national security or the export of technical data. Licensees should apprise themselves of current regulations especially with respect to certain countries, of other agencies, particularly the Office of Defense Trade Controls, Department of State (with respect to Arms, Munitions and Implements of War (22 CFR 121-128)); the Bureau of Industry and Security, Department of Commerce (15 CFR parts 730-774); the Office of Foreign Assets Control, Department of Treasury (31 CFR Parts 500+) and the Department of Energy.

NOT GRANTED

No license under 35 U.S.C. 184 has been granted at this time, if the phrase "IF REQUIRED, FOREIGN FILING LICENSE GRANTED" DOES NOT appear on this form. Applicant may still petition for a license under 37 CFR 5.12, if a license is desired before the expiration of 6 months from the filing date of the application. If 6 months has lapsed from the filing date of this application and the licensee has not received any indication of a secrecy order under 35 U.S.C. 181, the licensee may foreign file the application pursuant to 37 CFR 5.15(b).

UNITED STATES PATENT AND TRADEMARK OFFICE

COMMISSIONER FOR PATENTS
UNITED STATES PATENT AND TRADEMARK OFFICE
P.O. BOX 1450
ALEXANDRIA, VA 22313-1450
WWW.USPTO.GOV

Paper No. 5

THOMAS KAYDEN HORSTEMEYER & RISLEY
100 GALLERIA PARKWAY NW
SUITE 1750
ATLANTA, GA 30339-5948

COPY MAILED

JUL 15 2003

OFFICE OF PETITIONS

In re Application of :
Wolfgan Deeg et al :
Application No. 10/412,162 : NOTICE
Filed: April 11, 2003 :
Attorney Docket No. 051812-1190 :

This is a notice regarding your request for acceptance of a fee deficiency submission under 37 CFR 1.28. On September 1, 1998, the Court of Appeals for the Federal Circuit held that 37 CFR 1.28(c) is the sole provision governing the time for correction of the erroneous payment of the issue fee as a small entity. **See DH Technology v. Synergystex International, Inc. 154 F.3d 1333, 47 USPQ2d 1865 (Fed. Cir. Sept. 1, 1998).**

The Office no longer investigates or rejects original or reissue applications under 37 CFR 1.56. **1098 Off. Gaz. Pat. Office 502 (January 3, 1989)**. Therefore, nothing in this Notice is intended to imply that an investigation was done.

Your fee deficiency submission under 37 CFR 1.28 is hereby **ACCEPTED**.

Inquiries related to this communication should be directed to the Office of Petitions Staff at (703) 305-9285.

This file is being forwarded to Technology Center AU 3679.

Wan Laymon
Petitions Examiner
Office of Petitions
Office of the Deputy Commissioner
for Patent Examination Policy

UNITED STATES PATENT AND TRADEMARK OFFICE

COMMISSIONER FOR PATENTS
UNITED STATES PATENT AND TRADEMARK OFFICE
P.O. BOX 1450
ALEXANDRIA, VA 22313-1450
www.uspto.gov

MORRISON & FOERSTER LLP
12531 HIGH BLUFF DRIVE
SUITE 100
SAN DIEGO CA 92130-2040

COPY MAILED
AUG 24 2006
OFFICE OF PETITIONS

In re Application of	:	
Christopher K. Harris, et al.	:	
Application No. 10/412,163	:	DECISION ON REQUEST
Filed: April 10, 2003	:	TO WITHDRAW
Attorney Docket No. 529232000800	:	FROM RECORD
	:	

This is a decision on the Request to Withdraw as attorney or agent of record under 37 CFR §1.36(b), filed April 11, 2005.

The request is **NOT APPROVED** as moot.

A review of the file record indicates that the power of attorney to Richard C. Kim and all the other attorneys/agents of record associated with Customer Number 25225 was revoked by the assignee of the patent application on July 10, 2006. Accordingly, the request to withdraw under 37 CFR § 1.36(b) is moot.

All future communications from the Office will continue to be directed to the below-listed address until otherwise notified by applicant.

There is no outstanding Office action that requires a reply from the applicant.

Telephone inquires concerning this decision should be directed to the undersigned at (571) 272- 3204.

Sherry D. Brinkley
Petitions Examiner
Office of Petitions

cc: ZILKA-KOTAB, PC
P.O. BOX 721120
SAN JOSE CA 95172-1120

UNITED STATES PATENT AND TRADEMARK OFFICE

Commissioner for Patents
United States Patent and Trademark Office
P.O. Box 1450
Alexandria, VA 22313-1450
www.uspto.gov

SHEMWELL MAHAMEDI, LLP
4880 STEVENS CREEK BOULEVARD
SUITE 201
SAN JOSE, CA 95129

COPY MAILED

AUG 0 2 2007

OFFICE OF PETITIONS

In re Application of	:	
Salih Burak Gokturk et al.	:	
Application No. 10/412,169	:	DECISION ON PETITION
Filed: April 10, 2003	:	TO WITHDRAW
Attorney Docket No. 60045-0038	:	FROM RECORD
	:	

This is a decision on the Requests to Withdraw as attorney or agent of record under 37 C.F.R. § 1.36(b), filed April 16, 2007 and May 7, 2007.

The request is **APPROVED**.

A grantable request to withdraw as attorney/agent of record must be signed by every attorney/agent seeking to withdraw or contain a clear indication that one attorney is signing on behalf of another/others. A request to withdraw will not be approved unless at least 30 (thirty) days would remain between the date of approval and the later of the expiration date of a time to file a response or the expiration date of the maximum time period which can be extended under 37 C.F.R. § 1.136(a).

The requests were signed by Van Mahamedi on behalf of all attorneys of record who are associated with customer No. 30554. All attorneys/agents associated with the Customer Number 30554 have been withdrawn.

Applicant is reminded that there is no attorney of record at this time.

The correspondence address of record has been changed to the address noted on the request to withdraw filed April 16, 2007. The new correspondence address is the first copied address indicated below.

A final rejection was mailed on April 6, 2007. Failure to timely respond will result in the abandonment of this application.

Telephone inquiries concerning this decision should be directed to Kimberly Inabinet at 571-272-4618.

Frances Hicks
Petitions Examiner
Office of Petitions

cc: Canesta Inc.
440 North Wolf Road
Suite 101
Sunnyvale, CA 94085

cc: Michael Kaufman
440 N. Wolfe Road
Suite 101
Sunnyvale, CA 94085

UNITED STATES PATENT AND TRADEMARK OFFICE

Commissioner for Patents
United States Patent and Trademark Office
P.O. Box 1450
Alexandria, VA 22313-1450
www.uspto.gov

SCHLUMBERGER OILFIELD SERVICES
200 GILLINGHAM LANE
MD 200-9
SUGAR LAND, TX 77478

COPY MAILED

MAR 22 2006

OFFICE OF PETITIONS

In re Application of :
Herve Anxionnaz et al. :
Application No. 10/412,175 :
Filed: April 11, 2003 :
Title of Invention: 21.1126CIP :

ON PETITION

This is a decision on the petition filed March 2, 2006 under 37 CFR 1.137(b),[1] to revive the above-identified application.

The petition under 37 CFR 1.137 (b) is **GRANTED**.

This application became abandoned August 9, 2005 for failure to timely pay the issue fee on or before August 8, 2005. Accordingly, a Notice of Abandonment was mailed October 13, 2005.

The issue fee, petition fee and publication fee have been applied. All other requirements of 37 CFR 1.137(b) having now been met, this application file is being forwarded to the Publishing Division to be processed into a patent.

Telephone inquiries concerning this matter may be directed to the undersigned Petitions Attorney at (571) 272-3212.

Patricia Faison-Ball
Senior Petitions Attorney
Office of Petitions

---

[1]Effective December 1, 1997, the provisions of 37 CFR 1.137(b) now provide that where the delay in reply was unintentional, a petition may be filed to revive an abandoned application or a lapsed patent pursuant to 37 CFR 1.137(b). A grantable petition filed under the provisions of 37 CFR 1.137(b) must be accompanied by:

(1) the required reply, unless previously filed. In a nonprovisional application abandoned for failure to prosecute, the required reply may be met by the filing of a continuing application. In a nonprovisional application filed on or after June 8, 1995, and abandoned for failure to prosecute, the required reply may also be met by the filing of a request for continued examination in compliance with § 1.114. In an application or patent, abandoned or lapsed for failure to pay the issue fee or any portion thereof, the required reply must be the payment of the issue fee or any outstanding balance thereof.

(2) the petition fee as set forth in 37 CFR 1.17(m);

(3) a statement that the entire delay in filing the required reply from the due date for the reply until the filing of a grantable petition pursuant to 37 CFR 1.137(b) was unintentional. The Commissioner may required additional information where there is a question whether the delay was unintentional; and

(4) any terminal disclaimer (and fee as set forth in 37 CFR 1.20(d)) required pursuant to 37 CFR 1.137(c)).

UNITED STATES PATENT AND TRADEMARK OFFICE

UNITED STATES DEPARTMENT OF COMMERCE
United States Patent and Trademark Office
Address: COMMISSIONER FOR PATENTS
P.O. Box 1450
Alexandria, Virginia 22313-1450
www.uspto.gov

Continental Automotives Systems, Inc.
Patents & Licenses
21440 WEST LAKE COOK ROAD
Floor 7
DEER PARK, IL 60010

Mail Date: 04/21/2010

Applicant	: James A. Van Bosch	: DECISION ON REQUEST FOR
Patent Number	: 7610035	: RECALCULATION of PATENT
Issue Date	: 10/27/2009	: TERM ADJUSTMENT IN VIEW
Appliction No	: 10/412,179	: OF WYETH AND NOTICE OF INTENT TO
Filed	: 04/11/2003	: ISSUE CERTIFICATE OF CORRECTION
		:

The Request for Recalculation is **GRANTED** to the extent indicated.

The patent term adjustment has been determined to be **1544** days. The USPTO will *sua sponte* issue a certificate of correction reflecting the amount of PTA days determined by the recalculation.

Prior to the issuance of the certificate of correction, the USPTO will afford patentee an opportunity to be heard and request reconsideration. Accordingly, patentee has **one month or thirty (30) days**, whichever is longer, to file a request for reconsideration of this patent term adjustment calculation. See 35 U.S.C. 154(b)(3)(B)(ii) and 37 CFR 1.322(a)(4). No extensions of time will be granted under 37 CFR 1.136.

Patentee should use document code PET.OP if electronically filing a request for reconsideration of this patent term adjustment calculation. The patentee must also include the information required by 37 CFR 1.705(b)(2) and the fee required by 37 CFR 1.18(e). If patentee does not file a timely request for reconsideration of this patent term adjustment calculation including the information required by 37 CFR 1.705(b)(2) and the fee required by 37 CFR 1.18(e), the USPTO will issue a certificate of correction reflecting the PTA determination noted above.

Patentee should be aware that in order to preserve the right to review in the United States District Court for the District of Columbia of the USPTO patent term adjustment determination, patentee must ensure that he or she also take the steps required under 35 U.S.C. 154(b)(4)(A) in a timely manner. Nothing in the request for recalculation should be construed as providing an alternative time frame for commencing a civil action under 35 U.S.C. 154(b)(4)(A).

Any questions concerning this decision should be directed to the Office of Patent Legal Administration at 571-272-7702.

UNITED STATES PATENT AND TRADEMARK OFFICE

COMMISSIONER FOR PATENTS
UNITED STATES PATENT AND TRADEMARK OFFICE
P.O. BOX 1450
ALEXANDRIA, VA 22313-1450
www.uspto.gov

Paper No. 5

CHRISTINE W. TREBILCOCK
COHEN & GRIGSBY, P.C.
14TH FLOOR
11 STANWIX STREET
PITTSBURGH, PA 15222

COPY MAILED

FEB 2 0 2004

OFFICE OF PETITIONS

In re Application of	:	
Chen-Chou Chiang et al	:	
Application No. 10/412,180	:	DECISION GRANTING PETITION
Filed: April 11, 2003	:	UNDER 37 CFR 1.137(b)
Attorney Docket No. 02-254 CIP/BPA	:	

This is a decision on the petition under 37 CFR 1.137(b), filed October 30, 2003, to revive the instant nonprovisional application for failure to timely notify the U.S. Patent and Trademark (USPTO) of the filing of an application in a foreign country, or under a multinational treaty that requires publication of applications eighteen months after filing. *See* 37 CFR 1.137(f).

The petition is **GRANTED**.

Petitioner states that the instant nonprovisional application is the subject of an application filed in an eighteen month publication country on July 29, 2003. However, the USPTO was unintentionally not notified of this filing within 45 days subsequent to the filing of the subject application in an eighteen month publication country.

In view of the above, this application became abandoned pursuant to 35 U.S.C. § 122(b)(2)(B)(iii) and 37 CFR 1.213(c) for failure to timely notify the Office of the filing of an application in a foreign country or under a multilateral international agreement that requires publication of applications 18 months after filing.

A petition to revive an application abandoned pursuant to 35 U.S.C. 122(b)(2)(B)(iii) for failure to notify the USPTO of a foreign filing must be accompanied by:

(1) the required reply which is met by the notification of such filing in a foreign country or under a multinational treaty;

(2) the petition fee as set forth in 37 CFR 1.17(m); and
(3) a statement that the entire delay in filing the required reply from the due date of the reply until the filing of a grantable petition was unintentional.

The instant petition has been found to be in compliance with 37 CFR 1.137(b). Accordingly, the failure to timely notify the USPTO of a foreign or international filing within 45 days after the date of filing of such foreign or international application as provided by 35 U.S.C. § 122(b)(2)(B)(iii) and 37 CFR 1.213(c) is accepted as having been unintentionally delayed.

The previous Request and Certification under 35 U.S.C. § 122(b)(2)(B)(i) has been previously rescinded.

Any inquiries concerning this decision may be directed to Wan Laymon at (703) 306-5685.

This application is being forwarded to Technology Center Art Unit 1624 for examination in due course.

Frances Hicks

Frances Hicks
Lead Petitions Examiner
Office of Petitions
Office of the Deputy Commissioner
for Patent Examination Policy

UNITED STATES PATENT AND TRADEMARK OFFICE

COMMISSIONER FOR PATENTS
UNITED STATES PATENT AND TRADEMARK OFFICE
P.O. BOX 1450
ALEXANDRIA, VA 22313-1450
www.uspto.gov

Lee Guterman
660 LeBrun Road
Amherst, NY 14226

COPY MAILED

FEB 2 0 2004

OFFICE OF PETITIONS

In re Application of
Gerberding et al.
Application No. 10/369,015
Filed: February 19, 2003
Attorney Docket No. S13.12-0131
Title: METHODS AND DEVICES FOR THE TREATMENT OF ANEURYSMS

LETTER

Dear Mr. Guterman:

You are named as a joint inventor in the above-identified United States patent application filed under the provisions of 35 U.S.C. 116 (United States Code) and 37 CFR 1.47(a), Rules of Practice in Patent Cases. Should a patent be granted on the application you will be designated therein as a joint inventor.

As a named inventor you are entitled to inspect any paper in the file wrapper of the application, order copies of all or any part thereof (at a prepaid cost per 37 CFR 1.19) or make your position of record in the application. Alternatively, you may arrange to do any of the preceding through a registered patent attorney or agent presenting written authorization from you. If you care to join the application, counsel of record (see below) would presumably assist you. Joining in the application would entail the filing of an appropriate oath or declaration by you pursuant to 37 CFR 1.63. However, no action on your part is required for this patent to issue with you as a named inventor.

Telephone inquiries regarding this communication should be directed to Petitions Attorney Nancy Johnson at (703) 305-0309. Requests for information regarding your application should be directed to the File Information Unit at (703) 308-2733. Information regarding how to pay for and order a copy of the application, or a specific paper in the application, should be directed to the Certification Division at (703) 308-9726 or 1-800-972-6382 (outside the Washington D.C. area).

Nancy Johnson

Nancy Johnson
Senior Petitions Attorney
Office of Petitions

Christopher L. Holt
WESTMAN CHAMPLIN & KELLY
Suite 1600 - International Centre
900 South Second Avenue
Minneapolis, MN 55402-3319

UNITED STATES PATENT AND TRADEMARK OFFICE

Commissioner for Patents
United States Patent and Trademark Office
P.O. Box 1450
Alexandria, VA 22313-1450
www.uspto.gov

MAR - 7 2005

MAILED

MAR 7 2005

OFFICE OF THE DIRECTOR
TC 3600

BLAKELY SOKOLOFF TAYLOR & ZAFMAN
12400 Wilshire Boulevard
Seventh Floor
Los Angeles, CA 90025-1030

In re application of:
Stacy A. Lee et al.
Application No. 10/412,188 :
Filed: April 11, 2003 :
For: METHOD AND SYSTEM TO INCENTIVIZE A USER TO PERFORM AN ACTIVITY RELATING TO A NETWORK-BASED MARKETPLACE IN A TIMELY MANNER :

DECISION ON REQUEST FOR WITHDRAWAL OF ATTORNEY

This is a decision on the request filed on December 14, 2004, under 37 CFR 1.36 and MPEP 402.06, requesting permission to withdraw as the attorney of record in the above-identified application.

The request is **NOT APPROVED**.

Under 37 CFR 1.36 an attorney may withdraw only upon application to and approval by the Commissioner. It should be noted that a withdrawal is effective when approved, not when filed. Besides giving due notice to his or her client and delivering to the client all papers and property to which the client is entitled as specified under 37 CFR 10.40, approval of such a request requires that the following conditions be met:

A) Each attorney of record must sign the notice of withdrawal, or the notice must contain a clear indication of one attorney signing on behalf of another, because the Office does not recognize law firms;

B) A proper reason for the withdrawal as enumerated in 37 CFR 10.40(b) or subsection (1)-(6) of 37 CFR 10.40(c) must be provided; and

C) If withdrawal is requested in accordance with 37 CFR 10.40(c) above, there must be at least 30 days between approval of the withdrawal and the later of the expiration date of a time period for reply or the expiration date of the period which can be obtained by a petition and fee for extension of time under 37 CFR 1.136(a).

The request to withdraw as attorney is not accepted in the above-identified application because the request lacks condition B) above.

As to condition B), the reason "Discontinuation of the attorney-client relationship", is not appropriate since it is not clear that the client initiated the transfer, or that the client knowingly or freely assents to the transfer to new counsel. A proper reason for withdrawal is enumerated in 37 CFR 10.40(b) subsections (1)-(4) or subsections (1)-(6) of 37 CFR 10.40(c) must be provided.

Steven N. Meyers
Special Programs Examiner
Patent Technology Center 3600
(703) 308-3868

SNM/pav: 03/03/05

UNITED STATES PATENT AND TRADEMARK OFFICE

MAR - 7 2005

Commissioner for Patents
United States Patent and Trademark Office
P.O. Box 1450
Alexandria, VA 22313-1450
www.uspto.gov

BLAKELY SOKOLOFF TAYLOR & ZAFMAN
12400 Wilshire Boulevard
Seventh Floor
Los Angeles, CA 90025-1030

MAILED

MAR 7 2005

OFFICE OF THE DIRECTOR
TC 3600

In re application of:
Jay Monahan et al.
Application No. 10/412,194 :
Filed: April 11, 2003 :
For: METHOD AND SYSTEM TO INCENTIVIZE A SELLER TO PERFORM AN ACTIVITY RELATING TO A NETWORK-BASED MARKETPLACE :

DECISION ON REQUEST FOR WITHDRAWAL OF ATTORNEY

This is a decision on the request filed on December 14, 2004, under 37 CFR 1.36 and MPEP 402.06, requesting permission to withdraw as the attorney of record in the above-identified application.

The request is **NOT APPROVED**.

Under 37 CFR 1.36 an attorney may withdraw only upon application to and approval by the Commissioner. It should be noted that a withdrawal is effective when approved, not when filed. Besides giving due notice to his or her client and delivering to the client all papers and property to which the client is entitled as specified under 37 CFR 10.40, approval of such a request requires that the following conditions be met:

A) Each attorney of record must sign the notice of withdrawal, or the notice must contain a clear indication of one attorney signing on behalf of another, because the Office does not recognize law firms;

B) A proper reason for the withdrawal as enumerated in 37 CFR 10.40(b) or subsection (1)-(6) of 37 CFR 10.40(c) must be provided; and

C) If withdrawal is requested in accordance with 37 CFR 10.40(c) above, there must be at least 30 days between approval of the withdrawal and the later of the expiration date of a time period for reply or the expiration date of the period which can be obtained by a petition and fee for extension of time under 37 CFR 1.136(a).

The request to withdraw as attorney is not accepted in the above-identified application because the request lacks condition B) above.

As to condition B), the reason "Discontinuation of the attorney-client relationship", is not appropriate since it is not clear that the client initiated the transfer, or that the client knowingly or freely assents to the transfer to new counsel. A proper reason for withdrawal is enumerated in 37 CFR 10.40(b) subsections (1)-(4) or subsections (1)-(6) of 37 CFR 10.40(c) must be provided.

Steven N. Meyers
Special Programs Examiner
Patent Technology Center 3600
(703) 308-3868

SNM/pav: 03/03/05

UNITED STATES PATENT AND TRADEMARK OFFICE

Commissioner for Patents
United States Patent and Trademark Office
P.O. Box 1450
Alexandria, VA 22313-1450
www.uspto.gov

Robert E. Krebs
THELEN REID & PRIEST LLP
P.O. Box 640640
San Jose CA 95164-0640

COPY MAILED

AUG 16 2006

OFFICE OF PETITIONS

In re Application of	:	
Dominique NOGUET et al.	:	
Application No. 10/412,195	:	DECISION ON PETITION
Filed: April 11, 2003	:	TO WITHDRAW
Attorney Docket No. 034299-000505	:	FROM RECORD
	:	

This is a decision on the Request to Withdraw as attorney or agent of record under 37 C.F.R. § 1.36(b), filed April 20, 2006.

The request is **NOT APPROVED**.

A grantable request to withdraw as attorney/agent of record must be signed by every attorney/agent seeking to withdraw or contain a clear indication that one attorney is signing on behalf of another/others. A request to withdraw will not be approved unless at least 30 (thirty) days would remain between the date of approval and the later of the expiration date of a time to file a response or the expiration date of the maximum time period which can be extended under 37 C.F.R. § 1.136(a).

The request cannot be approved because no reasons for withdrawal have been provided. The Office cannot, at this time, determine whether practitioner's request is one of the mandatory or permissive reasons enumerated in 37 CFR 10.40. Any subsequent requests must include reasons for withdrawal. Please note that there is a space provided for on PTO/SB/83 (Request to Withdraw as Attorney or Agent) to supply practitioner's reasons.

All future communications from the Office will continue to be directed to the above-listed address until otherwise notified by applicant.

Telephone inquiries concerning this decision should be directed to Monica A. Graves at 571-272-7253.

Amelia Au
Petitions Examiner
Office of Petitions

cc: BERKELEY LAW & TECHNOLOGY GROUP LLP
Attn: Jessica A. Harvey
1700 NW 167th Place, Suite 240
Beaverton, OR 97006

UNITED STATES PATENT AND TRADEMARK OFFICE

Commissioner for Patents
United States Patent and Trademark Office
P.O. Box 1450
Alexandria, VA 22313-1450
www.uspto.gov

RALPH J. MANCINI
AKZO NOBEL INC.
7 LIVINGSTONE AVENUE
DOBBS FERRY, NY 10522-3408

COPY MAILED

APR 18 2005

OFFICE OF PETITIONS

In re Application of	:	
Zhang et al.	:	DISMISSAL OF PETITION
Application No. 10/412,201	:	UNDER 37 CFR 1.78(a)(3)
Filed: April 11, 2003	:	
Attorney Docket No. ACA6296US	:	

This is a decision on the petition under 37 CFR 1.78(a)(3), filed November 19, 2004, to accept an unintentionally delayed benefit claim. Specifically, petitioner wishes to claim benefit under 35 USC 120 of application no. 10/177,405.

The petition is **dismissed**.

When an application is filed on or after November 29, 2000, benefit claims under 35 U.S.C. 119(e), 120, 121 and 365(c) must be made during the pendency of the application and within the later of four months from the actual filing date of the application or sixteen months from the filing date of the prior application. For the instant application, the above period of time ended on October 2, 2003. The priority claim at issue was not made by this date. However, petitioner has submitted a petition under 37 CFR 1.78(a)(3).

37 CFR 1.78(a)(3) states,

If the reference required by 35 U.S.C. 120 and paragraph (a)(2) of this section is presented in a nonprovisional application after the time period provided by paragraph (a)(2)(ii) of this section, the claim under 35 U.S.C. 120, 121, or 365(c) for the benefit of a prior-filed copending nonprovisional application or international application designating the United States of America may be accepted if the reference identifying the prior-filed application by application number or international application number and international filing date was unintentionally delayed. A petition to accept an unintentionally delayed claim under 35 U.S.C. 120, 121, or 365(c) for the benefit of a prior-filed application must be accompanied by:

(i) The reference required by 35 U.S.C. 120 and paragraph (a)(2) of this section to the prior-filed application, unless previously submitted;
(ii) The surcharge set forth in § 1.17(t); and
(iii) A statement that the entire delay between the date the claim was due under paragraph (a)(2)(ii) of this section and the date the claim was filed was unintentional. The Commissioner may require additional information where there is a question whether the delay was unintentional.

Petitioner has failed to satisfy requirement (i) listed above. The petition is not accompanied by a reference to the prior-filed application in an amendment to the first line of the specification following the title as required by 37 CFR 1.78(a)(iii) or in an Application Data Sheet (ADS) in accordance with 37 CFR 1.76(b).

A proper amendment **or** an ADS must be submitted.

Petitioner may wish to note the surcharge for a petition under 37 CFR 1.78 was increased to $1,370 effective October 1, 2004. Therefore, $1,370, rather than $1,330, has been charged to petitioner's deposit account.

Further correspondence with respect to this matter should be addressed as follows:

By mail: Mail Stop Petition
Commissioner for Patents
P.O. Box 1450
Alexandria, VA 22313-1450

By facsimile: (703) 872-9306
Attn: Office of Petitions

If a request for reconsideration is filed, and a decision on the new petition is not received within three months, petitioner may wish to call the number below to check on the status of the renewed petition.

Telephone inquiries should be directed to Petitions Attorney Steven Brantley at (571) 272-3203.

Frances Hicks
Petitions Examiner
Office of Petitions

PTO/SB/66 (03-09)
Approved for use through 03/31/2012. OMB 0651-0016
U.S. Patent and Trademark Office: U.S. DEPARTMENT OF COMMERCE
Under the Paperwork Reduction Act of 1995, no persons are required to respond to a collection of information unless it displays valid OMB control number.

PETITION TO ACCEPT UNINTENTIONALLY DELAYED PAYMENT OF MAINTENANCE FEE IN AN EXPIRED PATENT (37 CFR 1.378(c))

Patent Number	Issue Date (YYYY-MM-DD)	Application Number	Filing Date (YYYY-MM-DD)	Docket Number (if applicable)
6740808	2004-05-25	10412210	2003-04-14	BHT-3092-357

CAUTION: Maintenance fee (and surcharge, if any) payment must correctly identify: (1) the patent number and (2) the application number of the actual U.S. application leading to issuance of that patent to ensure the fee(s) is/are associated with the correct patent. 37 CFR 1.366(c) and (d).

SMALL ENTITY
☒ Patentee claims, or has previously claimed, small entity status. See 37 CFR 1.27.

LOSS OF ENTITLEMENT TO SMALL ENTITY STATUS
☐ Patentee is no longer entitled to small entity status. See 37 CFR 1.27(g)

NOT Small Entity		Small Entity	
Fee	Code	Fee	Code
○ 3 ½ year	(1551)	◉ 3 ½ year	(2551)
○ 7 ½ year	(1552)	○ 7 ½ year	(2552)
○ 11 ½ year	(1553)	○ 11 ½ year	(2553)

SURCHARGE
The surcharge required by 37 CFR 1.20(i)(2) (Fee Code 1558) must be paid as a condition of accepting unintentionally delayed payment of the maintenance fee.

MAINTENANCE FEE (37 CFR 1.20(e)-(g))
The appropriate maintenance fee must be submitted with this petition.

STATEMENT
THE UNDERSIGNED CERTIFIES THAT THE DELAY IN PAYMENT OF THE MAINTENANCE FEE TO THIS PATENT WAS UNINTENTIONAL

PETITIONER(S) REQUEST THAT THE DELAYED PAYMENT OF THE MAINTENANCE FEE BE ACCEPTED AND THE PATENT REINSTATED

THIS PORTION MUST BE COMPLETED BY THE SIGNATORY OR SIGNATORIES

37 CFR 1.378(d) states: "Any petition under this section must be signed by an attorney or agent registered to practice before the Patent and Trademark Office, or by the patentee, the assignee, or other party in interest."

I certify, in accordance with 37 CFR 1.4(d)(4) that I am

◉ An attorney or agent registered to practice before the Patent and Trademark Office

○ A sole patentee

○ A joint patentee; I certify that I am authorized to sign this submission on behalf of all the other patentees.

○ A joint patentee; all of whom are signing this e-petition

○ The assignee of record of the entire interest

Patent Practitioner			
A signature of the applicant or representative is required in accordance with 37 CFR 1.33 and 10.18. Please see 37 CFR 1.4(d) for the form of the signature			
Signature	/Roger H. Chu, Reg. # 52745/	Date (YYYY-MM-DD)	2009-04-03
Name	Roger H. Chu	Registration Number	52745

This collection of information is required by 37 CFR 1.378(c). The information is required to obtain or retain a benefit by the public which is to file (and by the USPTO to process) an application. Confidentiality is governed by 35 U.S.C. 122 and 37 CFR 1.11 and 1.14. This collection is estimated to take 1 hour to complete, including gathering, preparing, and submitting the completed application form to the USPTO. Time will vary depending upon the individual case. Any comments on the amount of time you require to complete this form and/or suggestions for reducing this burden, should be sent to the Chief Information Officer, U.S. Patent and Trademark Office, U.S. Department of Commerce, P.O. Box 1450, Alexandria, VA 22313-1450. DO NOT SEND FEES OR COMPLETED FORMS TO THIS ADDRESS. **This form can only be used when in conjunction with EFS-Web. If this form is mailed to the USPTO, it may cause delays in reinstating the patent.**

Privacy Act Statement

The Privacy Act of 1974 (P.L. 93-579) requires that you be given certain information in connection with your submission of the attached form related to a patent application or patent. Accordingly, pursuant to the requirements of the Act, please be advised that: (1) the general authority for the collection of this information is 35 U.S.C. 2(b)(2); (2) furnishing of the information solicited is voluntary; and (3) the principal purpose for which the information is used by the U.S. Patent and Trademark Office is to process and/or examine your submission related to a patent application or patent. If you do not furnish the requested information, the U.S. Patent and Trademark Office may not be able to process and/or examine your submission, which may result in termination of proceedings or abandonment of the application or expiration of the patent.

The information provided by you in this form will be subject to the following routine uses:

1. The information on this form will be treated confidentially to the extent allowed under the Freedom of Information Act (5 U.S.C. 552) and the Privacy Act (5 U.S.C. 552a). Records from this system of records may be disclosed to the Department of Justice to determine whether the Freedom of Information Act requires disclosure of these records.

2. A record from this system of records may be disclosed, as a routine use, in the course of presenting evidence to a court, magistrate, or administrative tribunal, including disclosures to opposing counsel in the course of settlement negotiations.

3. A record in this system of records may be disclosed, as a routine use, to a Member of Congress submitting a request involving an individual, to whom the record pertains, when the individual has requested assistance from the Member with respect to the subject matter of the record.

4. A record in this system of records may be disclosed, as a routine use, to a contractor of the Agency having need for the information in order to perform a contract. Recipients of information shall be required to comply with the requirements of the Privacy Act of 1974, as amended, pursuant to 5 U.S.C. 552a(m).

5. A record related to an International Application filed under the Patent Cooperation Treaty in this system of records may be disclosed, as a routine use, to the International Bureau of the World Intellectual Property Organization, pursuant to the Patent Cooperation Treaty.

6. A record in this system of records may be disclosed, as a routine use, to another federal agency for purposes of National Security review (35 U.S.C. 181) and for review pursuant to the Atomic Energy Act (42 U.S.C. 218(c)).

7. A record from this system of records may be disclosed, as a routine use, to the Administrator, General Services, or his/her designee, during an inspection of records conducted by GSA as part of that agency's responsibility to recommend improvements in records management practices and programs, under authority of 44 U.S.C. 2904 and 2906. Such disclosure shall be made in accordance with the GSA regulations governing inspection of records for this purpose, and any other relevant (i.e., GSA or Commerce) directive. Such disclosure shall not be used to make determinations about individuals.

8. A record from this system of records may be disclosed, as a routine use, to the public after either publication of the application pursuant to 35 U.S.C. 122(b) or issuance of a patent pursuant to 35 U.S.C. 151. Further, a record may be disclosed, subject to the limitations of 37 CFR 1.14, as a routine use, to the public if the record was filed in an application which became abandoned or in which the proceedings were terminated and which application is referenced by either a published application, an application open to public inspections or an issued patent.

9. A record from this system of records may be disclosed, as a routine use, to a Federal, State, or local law enforcement agency, if the USPTO becomes aware of a violation or potential violation of law or regulation.

UNITED STATES PATENT AND TRADEMARK OFFICE

Commissioner for Patents
United States Patent and Trademark Office
P.O. Box 1450
Alexandria, VA 22313-1450
www.uspto.gov

In re Patent No. 6740808
Issue Date: May 25,2004
Application No. 10412210
Filed: April 14,2003
Attorney Docket No. BHT-3092-357

:DECISION GRANTING PETITION
:UNDER 37 CFR 1.378(c)

This is a decision on the electronic petition, filed April 3,2009 ,under 37 CFR 1.378(c) to accept the unintentionally delayed payment of the 3.5 year maintenance fee for the above-identified patent.

The petition is **GRANTED**.

The maintenance fee is accepted, and the above-identified patent reinstated as of April 3,2009 .
This decision also constitutes notice that the fee has been accepted. An electronic copy of the petition and this decision has been created as an entry in the Image File Wrapper. Nevertheless, petitioner should print and retain an independent copy.

Telephone inquiries related to this electronic decision should be directed to the Electronic Business Center at 1-866-217-9197.

UNITED STATES PATENT AND TRADEMARK OFFICE

Commissioner for Patents
United States Patent and Trademark Office
P.O. Box 1450
Alexandria, VA 22313-1450
www.uspto.gov

COPY MAILED

MAY 24 2007

OFFICE OF PETITIONS

Fish & Neave, IP Group
Ropes & Gray LLP
One International Place
Boston, MA 02110-2624

In re Application of	:	
Dean Collins et al.	:	
Application No. 10/412,269	:	DECISION ON PETITION
Filed: April 14, 2003	:	TO WITHDRAW
Attorney Docket No. TRAV0014-US	:	FROM RECORD
	:	

This is a decision on the Request to Withdraw as attorney or agent of record under 37 C.F.R. § 1.36(b), filed April 25, 2004.

The request is **NOT APPROVED** as moot.

A review of the file record indicates that the power of attorney to George T. Marcou with the firm of Kilpatrick, Stockton LLP, has been revoked by the assignee, Travelers Property Casualty Corporation of the patent application on April 3, 2007. Accordingly, the request to withdraw under 37 C.F.R. § 1.36(b) is moot.

All future communications from the Office will continue to be directed to the below-listed address until otherwise notified by applicant.

It is noted that the revocation of power of attorney submitted on April 3, 2007, contained a 3.73(b) statement and a copy of an assignment. Applicant is advised to file the assignment separately with the Assignment Branch. There is no record of an assignment in this application. If you have already done so, you may want to follow up with the Assignment Branch on the status of this matter.

Telephone inquires concerning this decision should be directed to Kimberly Inabinet at 571-272- 4618.

Frances Hicks
Petitions Examiner
Office of Petitions

cc: Wilmer Cuttler Pickering Hale
and Dorr LLP
399 Park Avenue
New York, NY 10022

UNITED STATES PATENT AND TRADEMARK OFFICE

UNITED STATES DEPARTMENT OF COMMERCE
United States Patent and Trademark Office
Address: COMMISSIONER FOR PATENTS
P.O. Box 1450
Alexandria, Virginia 22313-1450
www.uspto.gov

APPLICATION NUMBER	FILING OR 371 (c) DATE	FIRST NAMED APPLICANT	ATTY. DOCKET NO./TITLE
10/412,269	04/14/2003	Dean Collins	TRAV0014-US

CONFIRMATION NO. 2320

OC000000023979266

28120
FISH & NEAVE IP GROUP
ROPES & GRAY LLP
ONE INTERNATIONAL PLACE
BOSTON, MA 02110-2624

Date Mailed: 05/21/2007

NOTICE REGARDING CHANGE OF POWER OF ATTORNEY

This is in response to the Power of Attorney filed 04/03/2007.

- The Power of Attorney to you in this application has been revoked by the assignee who has intervened as provided by 37 CFR 3.71. Future correspondence will be mailed to the new address of record(37 CFR 1.33).

Kimberly Inalinet

Office of Initial Patent Examination (571) 272-4000, or 1-800-PTO-9199

FORMER ATTORNEY/AGENT COPY

UNITED STATES PATENT AND TRADEMARK OFFICE

Commissioner for Patents
United States Patent and Trademark Office
P.O. Box 1450
Alexandria, VA 22313-1450
www.uspto.gov

MAILED

FEB 05 2010

OFFICE OF PETITIONS

WILMERHALE/NEW YORK
399 PARK AVENUE
NEW YORK NY 10022

In re Application
Dean Collins et al.
Application No. 10/412,269
Filed: April 14, 2003
Attorney Docket No. **SPLT-PO1-014**

: DECISION ON APPLICATION
: FOR PATENT TERM ADJUSTMENT

This is in response to the APPLICATION FOR PATENT TERM ADJUSTMENT AND REQUEST FOR RECONSIDERATION OF THE PATENT TERM ADJUSTMENT UNDER 37 C.F.R.§§ 1.702-1.705 filed November 9, 2009. Applicant requests that the determination of patent term adjustment be corrected from 972 days to 1280 days. Applicant requests this correction in part on the basis that the Office will take in excess of three years to issue this patent and in light of the court decision in Wyeth v. Dudas, No. 07-1492 (D.D.C. September 30, 2008).[1]

As the instant application for patent term adjustment requests reconsideration of the patent term adjustment as it relates to the Office's failure to issue the patent within three years of the filing date, the application for patent term adjustment under 37 CFR 1.705(b) is **DISMISSED as PREMATURE**.

Knowledge of the actual date the patent issues is required to calculate the amount, if any, of additional patent term patentees are entitled to for Office failure to issue the patent within three years. See 37 CFR 1.702(b). (This is true even where a request for continued examination (RCE) was filed). The computer will not undertake the § 1.702(b) calculation until the actual date of issuance of the patent has been determined. Likewise, the computer will not calculate any further Office delay under 37 CFR 1.702(a)(4) or applicant delay under 37 CFR 1.704(c)(10) until the actual date of issuance of the patent has been determined. As such, the Office cannot make a determination on the of the patent term adjustment concerning those regulations until the patent has issued.

---

[1]Reconsidered in light of the Court of Appeals for the Federal Circuit's decision in *Wyeth v. Kappos*, 2009-1120 (Fed. Cir. 1-7-2010).

Requesting reconsideration of the patent term adjustment to be indicated on the patent under 37 CFR 1.705(b) based on the initial determination of patent term adjustment and a projected issuance date of the patent (or even the filing date of the request for continued examination) is premature. Accordingly, it is appropriate to dismiss such a request as premature.

Rather than file an application for patent term adjustment under 37 CFR 1.705(b) contesting the 37 CFR 1.702(b) calculation at the time of the mailing of the notice of allowance, applicants are advised that they may wait until the time of the issuance of the patent and file a request for reconsideration of the patent term adjustment pursuant to 37 CFR 1.705(d). As the USPTO does not calculate the amount of time earned pursuant to 37 CFR 1.702(b) until the time of the issuance of the patent, the Office will consider any request for reconsideration of the patent term adjustment due to an error in the calculation of 37 CFR 1.702(b) to be timely if the request for reconsideration is filed within two months of the issuance of the patent. However, as to all other bases for contesting the initial determination of patent term adjustment received with the notice of allowance, applicants must timely file an application for patent term adjustment prior to the payment of the issue fee.[2]

The Office acknowledges submission of the $200.00 fee set forth in 37 CFR 1.18(e) for consideration of the application for patent term adjustment under 37 CFR 1.705(b).

Any request for reconsideration of the patent term adjustment indicated on the patent must be timely filed within two months after issuance pursuant to 37 CFR 1.705(d) and must include payment of the required fee under 37 CFR 1.18(e).

The Office of Data Management has been advised of this decision. This application is being referred to the Office of Data Management for issuance of the patent.

Telephone inquiries specific to this decision should be directed to Senior Petitions Attorney Patricia Faison-Ball at (571) 272-3212.

/Kery A. Fries/

Kery A. Fries
Senior Legal Advisor
Office of Patent Legal Administration
Office of Deputy Commissioner
for Examination Policy

---

[2] For example, if applicants dispute both the calculation of patent term adjustment under 37 CFR 1.702(a)(1) for Office failure to mail a first Office action or notice of allowance not later than fourteen months after the date on which the application was filed, and under 37 CFR 1.702(b) for Office failure to issue a patent within three years of the actual filing date of the application, then applicants must still timely file an application for patent term adjustment prior to the payment of the issue fee to contest the calculation of Office delay in issuing a first Office action or notice of allowance. See 37 CFR 1.705(b) and 35 U.S.C. 154(b)(3)(B). A dispute as to the calculation of the § 1.702(a)(1) period raised on request for reconsideration of patent term adjustment under 37 CFR 1.705(d) will be dismissed as untimely filed.

UNITED STATES PATENT AND TRADEMARK OFFICE

COMMISSIONER FOR PATENTS
UNITED STATES PATENT AND TRADEMARK OFFICE
P.O. BOX 1450
ALEXANDRIA, VA 22313-1450
www.uspto.gov

Paper No.

FINNEGAN, HENDERSON, FARABOW,
GARRETT & DUNNER LLP
901 NEW YORK AVENUE, NW
WASHINGTON DC 20001-4413

COPY MAILED

NOV 26 2007

OFFICE OF PETITIONS

In re Patent No. 7,210,101	:	DECISION ON REQUEST FOR
Issue Date: April 24, 2007	:	RECONSIDERATION OF
Application No. 10/412,292	:	PATENT TERM ADJUSTMENT
Filed: April 14, 2003	:	and
Atty Docket No. 04329.3037	:	NOTICE OF INTENT TO ISSUE
	:	CERTFICATE OF CORRECTION

This is a decision on the "APPLICATION FOR PATENT TERM ADJUSTMENT-POST GRANT," filed June 18, 2007. Patentees request that the patent term adjustment under 35 U.S.C. 154(b) be corrected from one hundred sixty-nine (169) days to two hundred ten (210) days.

The request for reconsideration of patent term adjustment is **GRANTED to the extent indicated herein**.

The patent term adjustment indicated in the patent is to be corrected by issuance of a certificate of correction showing a revised Patent Term Adjustment of two hundred nine **(209)** days.

Patentees are given **TWO (2) MONTHS** from the mail date of this decision to respond to this decision. No extensions of time will be granted under § 1.136.

On April 24, 2007, the application matured into U.S. Patent No. 7,210,101, with a revised patent term adjustment of 169 days. On June 18, 2007, patentees timely submitted this request for

reconsideration of patent term adjustment (with required fee), asserting that the correct number of days of Patent Term Adjustment is 210 days. Patentees argue that since the Examiner should have considered by March 15, 2007, all three (3) of the documents submitted in the IDS filed on February 6, 2007, patentees respectively request that the loss of term attributable to applicants' delay from March 15, 2007 to April 24, 2007 be restored. Patentees argue that the corrected Notice of Allowability mailed March 15, 2007 should have considered both IDSs, but instead erred in stating that two of the items cited in the IDS failed to comply with provisions of 37 CFR §§ 1.97, 1.98 and MPEP § 609. Patentees further argue that this error necessitated the filing on April 12, 2007 of a Request to Reconsider Previously-Filed Information Disclosure Statement. On April 24, 2007, the patent issued. For these reasons, patentees request restoration of the loss of term attributable to applicant delay from March 15, 2007 to April 24, 2007.

Patentees' argument has been considered and found persuasive to the extent indicated herein. With respect to Information Disclosure Statements (IDSs) filed in this application on October 15, 2006 and on February 6, 2007, periods of 15 days and 78 days respectively were entered. Moreover, these periods were entered pursuant to 37 CFR §§ 1.704(c)(8) and (10). Pursuant to 37 CFR § 1.704(c), circumstances that constitute a failure of the applicant to engage in reasonable efforts to conclude processing or examination of an application also include the following circumstances, which will result in the following reduction of the period of adjustment set forth in § 1.703 to the extent that the periods are not overlapping:

> (8) Submission of a supplemental reply or other paper, other than a supplemental reply or other paper expressly requested by the examiner, after a reply has been filed, in which case the period of adjustment set forth in § 1.703 shall be reduced by the number of days, if any, beginning on the day after the date the initial reply was filed and ending on the date that the supplemental reply or other such paper was filed;
>
> ...
>
> (10) Submission of an amendment under § 1.312 or other paper after a notice of allowance has been given or mailed,

> in which case the period of adjustment set forth in § 1.703 shall be reduced by the lesser of:
>
> (i) The number of days, if any, beginning on the date the amendment under § 1.312 or other paper was filed and ending on the mailing date of the Office action or notice in response to the amendment under § 1.312 or such other paper; or
>
> (ii) Four months;

Patentees do not dispute that IDSs were filed on October 15, 2006 and February 6, 2007. Moreover, the first IDS was filed after a reply was filed on October 10, 2006. And, the second IDS was filed after the mailing of the notice of allowance on December 19, 2006. In response to the IDS filed February 6, 2007, a corrected Notice of Allowability was mailed on March 15, 2007.

Moreover, a review of the IDSs as filed reveals that neither was accompanied by a proper § 1.704(d) statement. Patentees are reminded of the specific language of 37 CFR §1.704(d)(*emphasis* added)

> A paper containing only an information disclosure statement in compliance with §§ 1.97 and 1.98 will not be considered a failure to engage in reasonable efforts to conclude prosecution (processing or examination) of the application under paragraphs (c)(6), (c)(8), (c)(9), or (c)(10) of this section if it is accompanied by a statement that *each item of information contained in the information disclosure statement was first cited in any communication from a foreign patent office in a counterpart application and that this communication was not received by any individual designated in § 1.56(c) more than thirty days prior to the filing of the information disclosure statement.* This thirty-day period is not extendable.

Neither IDS contained this exact statement. In order to obtain the benefit of 1.704(d), the IDS must contain this statement. Patentees do not contend that a period of reduction should not have been entered for the filing of either IDS.

Given a review of the record, it is concluded that the period of reduction of 15 days associated with the IDS filed October 15,

2006 is determined to be correct. However, the period of reduction associated with the IDS filed February 6, 2007 should have been entered as 38 days, regardless of the examiner's subsequent actions. The number of days beginning on the date the IDS was filed, February 6, 2007, and ending on the mailing date of the corrected Notice of Allowability, March 15, 2007. Patentees are reminded that:

> When a period is indicated (in 37 CFR 1.703 or 1.704) as "beginning" on a particular day, that day is included in the period, in that such day is "day one" of the period and not "day zero." For example, a period beginning on April 1 and ending on April 10 is ten (and not nine) days in length. (See MPEP 2731).

Thus the period of reduction is 38 days, not 37 days.

In view thereof, the patent should have issued with a revised patent term adjustment of two hundred nine (209) days.

It is noted that no paper is of record with a filing date of April 12, 2007. Accordingly, no further reduction, pursuant to 37 CFR 1.704(c)(10), for the period beginning on April 12, 2007 to April 24, 2007 is being entered. It is patentees' responsibility to ensure the completeness of the record if there should be a paper of record filed April 12, 2007. Moreover, if such a paper is entered, unless the paper is properly a notice of error in the Notice of Allowability mailed March 15, 2007 (see MPEP 2731), then patentees are under a duty of good faith and candor to advise the Office that further reduction of patent term adjustment is warranted.

The Office acknowledges submission of the $200.00 fee set forth in 37 CFR 1.18(e). No additional fees are required.

The application file is being forwarded to the Certificates of Correction Branch for issuance of a certificate of correction in order to rectify this error. The Office will issue a certificate of correction indicating that the term of the above-identified patent is extended or adjusted by two hundred nine **(209)** days.

Telephone inquiries specific to this decision should be directed to the undersigned at (571) 272-3219.

Nancy Johnson
Senior Petitions Attorney
Office of Petitions

Enclosure: Copy of DRAFT Certificate of Correction

UNITED STATES PATENT AND TRADEMARK OFFICE

CERTIFICATE OF CORRECTION

PATENT : 7,210,101 B2

DATED : **April 24, 2007**

INVENTOR(S) : Terashima et al.

DRAFT

It is certified that error appears in the above-identified patent and that said Letters Patent is hereby corrected as shown below:

On the cover page,

[*] Notice: Subject to any disclaimer, the term of this patent is extended or adjusted under 35 USC 154(b) by 169 days

Delete the phrase "by 169 days" and insert – by 209 days--

UNITED STATES PATENT AND TRADEMARK OFFICE

Commissioner for Patents
United States Patent and Trademark Office
P.O. Box 1450
Alexandria, VA 22313-1450
www.uspto.gov

HENKEL LOCTITE CORPORATION
1001 TROUT BROOK CROSSING
ROCKY HILL, CT 06067

COPY MAILED

AUG 2 2 2005

OFFICE OF PETITIONS

In re Application of	:	
Brendan J. Kneafsey et al	:	
Application No. 10/412,331	:	DECISION GRANTING PETITION
Filed: April 14, 2003	:	UNDER 37 CFR 1.313(c)(2)
Attorney Docket No. ICC-233 AB	:	

This is a decision on the petition, filed August 15, 2005, under 37 CFR 1.313(c)(2) to withdraw the above-identified application from issue after payment of the issue fee.

The petition is **GRANTED**.

The above-identified application is withdrawn from issue for consideration of a submission under 37 CFR 1.114 (request for continued examination). See 37 CFR 1.313(c)(2).

Petitioner is advised that the issue fee paid on June 21, 2005 in the above-identified application cannot be refunded. If, however, the above-identified application is again allowed, petitioner may request that it be applied towards the issue fee required by the new Notice of Allowance.[1]

Telephone inquiries should be directed to the undersigned at (571) 272-3218.

This matter is being referred to Technology Center AU 1773 for processing of the request for continued examination under 37 CFR 1.114 and for consideration of the Information Disclosure Statement.

Frances Hicks
Petitions Examiner
Office of Petitions

---

[1] *The request to apply the issue fee to the new Notice may be satisfied by completing and returning the new Issue Fee Transmittal Form PTOL-85(b), which includes the following language thereon: "Commissioner for Patents is requested to apply the Issue Fee and Publication Fee (if any) or re-apply any previously paid issue fee to the application identified above." Petitioner is advised that, whether a fee is indicated as being due or not, the Issue Fee Transmittal Form* ***must*** *be completed and timely submitted to avoid abandonment. Note the language in bold text on the first page of the Notice of Allowance and Fee(s) Due (PTOL-85).*

UNITED STATES PATENT AND TRADEMARK OFFICE

Commissioner for Patents
United States Patent and Trademark Office
P.O. Box 1450
Alexandria, VA 22313-1450
www.uspto.gov

BIRCH STEWART KOLASCH & BIRCH
PO BOX 747
FALLS CHURCH VA 22040-0747

COPY MAILED
DEC 1 8 2006
OFFICE OF PETITIONS

In re Patent No. 7,127,667	:	
Issue Date: October 24, 2006	:	
Application No. 10/412,339	:	NOTICE
Filed: April 14, 2006	:	
Attorney Docket No. 3722-0140P	:	

This is a notice regarding your request for acceptance of a fee deficiency submission under 37 CFR 1.28. On September 1, 1998, the Court of Appeals for the Federal Circuit held that 37 CFR 1.28(c) is the sole provision governing the time for correction of the erroneous payment of the issue fee as a small entity. **See DH Technology v. Synergystex International, Inc. 154 F.3d 1333, 47 USPQ2d 1865 (Fed. Cir. Sept. 1, 1998).**

The Office no longer investigates or rejects original or reissue applications under 37 CFR 1.56. **1098 Off. Gaz. Pat. Office 502 (January 3, 1989)**. Therefore, nothing in this Notice is intended to imply that an investigation was done.

Your fee deficiency submission under 37 CFR 1.28 is hereby **ACCEPTED**.

This application is no longer entitled to small entity status. Accordingly, all future fees paid in this application must be paid at the large entity rate.

Liana Walsh
Petitions Examiner
Office of Petitions

UNITED STATES PATENT AND TRADEMARK OFFICE

Commissioner for Patents
United States Patent and Trademark Office
P.O. Box 1450
Alexandria, VA 22313-1450
www.uspto.gov

WOODCOCK WASHBURN LLP
CIRA CENTRE, 12TH FLOOR
2929 ARCH STREET
PHILADELPHIA PA 19104-2891

COPY MAILED

FEB 0 4 2008

OFFICE OF PETITIONS

In re Application of

HILLHOUSE, Robert D.
Application No. 10/412,347
Filed: April 14, 2003
Attorney Docket No. **IVPH-0089**

DECISION ON PETITION
TO WITHDRAW
FROM RECORD

This is a decision on the Request to Withdraw as attorney or agent of record under 37 C.F.R. § 1.36(b), filed December 11, 2007.

The request is **APPROVED**.

A grantable request to withdraw as attorney/agent of record must be signed by every attorney/agent seeking to withdraw or contain a clear indication that one attorney is signing on behalf of another/others. A request to withdraw will not be approved unless at least 30 (thirty) days would remain between the date of approval and the later of the expiration date of a time to file a response or the expiration date of the maximum time period which can be extended under 37 C.F.R. § 1.136(a).

The request was signed by Michael Dunnam on behalf of all attorneys of record who are associated. All attorneys/agents associated have been withdrawn. Applicant is reminded that there is no attorney of record at this time.

The request to change the correspondence of record is not acceptable as the requested correspondence address is not that of: (1) the first named signing inventor; or (2) an intervening assignee of the entire interest under 37 C.F.R 3.71. All future communications from the Office will be directed to the first named signing inventor at the first copied address below until otherwise properly notified by the applicant.

Telephone inquiries concerning this decision should be directed to Tredelle Jackson at 571-272-2783.

Monica A. Graves
Petitions Examiner
Office of Petitions

cc: **ROBERT D. HILLHOUSE**
UNIT 4B
120 HOLLAND AVENUE
OTTAWA, K1Y 0X6
CANADA

cc: **PERKINS COIE**
1201 THIRD AVENUE
SUITE 4800
SEATTLE, WA 98101

UNITED STATES PATENT AND TRADEMARK OFFICE

Commissioner for Patents
United States Patent and Trademark Office
P.O. Box 1450
Alexandria, VA 22313-1450
www.uspto.gov

STEPHEN M. DE KLERK
BLAKELY SOKOLOFF TAYLOR & ZAFMAN
SEVENTH FLOOR
12400 WILSHIRE BOULEVARD
LOS ANGELES, CA 90025-1026

COPY MAILED

NOV 3 0 2005

OFFICE OF PETITIONS

In re Application of	:	
Ashok Dhuna	:	
Application No. 10/412,369	:	ON PETITION
Filed: April 10, 2003	:	
Attorney Docket No. 006405.P002	:	

This is a decision on the petition under 37 CFR 1.137(b), filed November 17, 2005, to revive the above-identified application. This is also a decision to the notice regarding your request for acceptance of a fee deficiency submission under 37 CFR 1.28.

The petition under 37 CFR 1.137(b) is **GRANTED**.

The fee deficiency submission under 37 CFR 1.28 is **ACCEPTED**.

The above-identified application became abandoned for failure to submit the issue/publication fees in a timely manner in reply to the Notice of Allowance mailed August 9, 2005, which set a statutory period for reply of three (3) months. Accordingly, the above-identified application became abandoned on November 10, 2005.

The petition satisfies the conditions for revival pursuant to the provisions of 37 CFR 1.137(b) in that (1) the reply in the form of the issue/publication fees; (2) the petition fee; and (3) the required statement of unintentional delay have been received. Accordingly, the issue/publication fees are accepted as having been unintentional delayed.

On September 1, 1998, the Court of Appeals for the Federal Circuit held that 37 CFR 1.28(c) is the sole provision governing the time for correction of the erroneous payment of the issue fee as a small entity. **See DH Technology v. Synergystex International, Inc. 154 F.3d 1333, 47 USPQ2d 1865 (Fed. Cir. Sept. 1, 1998).**

The Office no longer investigates or rejects original or reissue applications under 37 CFR 1.56. **1098 Off. Gaz. Pat. Office 502 (January 3, 1989)**. Therefore, nothing in this Notice is intended to imply that an investigation was done.

Telephone inquiries concerning this decision should be directed to Wan Laymon at (571) 272-3220.

This matter is being referred to Publishing Division.

Wan Laymon

Wan Laymon
Petitions Examiner
Office of Petitions

UNITED STATES PATENT AND TRADEMARK OFFICE

Commissioner for Patents
United States Patent and Trademark Office
P.O. Box 1450
Alexandria, VA 22313-1450
www.uspto.gov

Paper No. 6

GABOR L. SZEKERES
8141 E. KAISER BLVD.
SUITE 112
ANAHEIM HILLS, CA 92808

COPY MAILED

JUN 1 5 2004

OFFICE OF PETITIONS

In re Application of
Duran
Application No. 10/412,377
Filed: April 11, 2003
Attorney Docket No. 362-09-PA

ON PETITION

This decision concerns the March 22, 2004 petition under 37 CFR 1.137(b).

The petition is **GRANTED.**

The application became abandoned on August 7, 2003 for failure to timely submit a properly signed oath or declaration as required by the June 6, 2003 "Notice to File Missing Parts of Nonprovisional Application."

The instant petition encloses a signed "Combined Declaration and Power of Attorney," the $65 surcharge for late filing of such a declaration, and the $665 petition fee (both in small entity amounts); and states that the entire delay in submitting the declaration from the due date until the filing of a grantable §1.137(b) petition was unintentional. The petition is thus granted.

The application is now complete.

The application file is being forwarded to Technology Center 3700 for examination in due course.

Telephone inquiries should be directed to the undersigned at (703) 308-0763.

RC Tang
Petitions Attorney
Office of Petitions

UNITED STATES PATENT AND TRADEMARK OFFICE

Commissioner for Patents
United States Patent and Trademark Office
P.O. Box 1450
Alexandria, VA 22313-1450
www.uspto.gov

LEONARD TACHNER, A PROFESSIONAL LAW CORPORATION
17961 SKY PARK CIRCLE, SUITE 38-E
IRVINE, CA 92614

COPY MAILED

APR 2 8 2008

OFFICE OF PETITIONS

ON PETITION

In re Application of :
Frank Hermansen, et al. :
Application No. 10/412,397 :
Filed: April 12, 2003 :
Attorney Docket No. SLIP-9 :

This is a decision on the petition under the unintentional provisions of 37 CFR 1.137(b), filed October 31, 2007, to revive the above-identified application.

The petition is **GRANTED**.

The application became abandoned for failure to timely file a reply within the meaning of 37 CFR 1.113 to the final Office action of May 24, 2006. The proposed reply required for consideration of a petition to revive must be a Notice of Appeal (and appeal fee required by 37 CFR 41.20(b)(2), an amendment that *prima facie* places the application in condition for allowance, a Request for Continued Examination and submission (37 CFR 1.114), or the filing of a continuing application under 37 CFR 1.53(b). See MPEP 711.03(c)(II)(A)(2). No extensions of time pursuant to the provisions of 37 CFR 1.136(a) were obtained. Accordingly, the date of abandonment of this application is August 24, 2006.

The petition satisfies the requirements of 37 CFR 1.137(b) in that petitioner has supplied (1) the reply in the form of a Request for Continued Examination (RCE) and fee of $405, and the submission required by 37 CFR 1.114; (2) the petition fee of $770; and (3) a proper statement of unintentional delay.

The Associate Power of Attorney filed with the petition on March 8, 2006, was filed after June 25, 2004, the effective date of a rule change eliminating the Associate Power of Attorney practice (37 CFR 1.34(b) was eliminated). See MPEP § 402.02 and Revision of Power of Attorney and Assignment Practice, 69 Fed. Reg. 29865 (May 26, 2004); 1283 Off. Gaz. 148 (June 22, 2004). Although the paper has been placed in the file, the names of the patent practitioners listed on the Associate Power of Attorney have not been made of record.

There is no indication that the person signing the instant petition was ever given a power of attorney or authorization of agent to prosecute the above-identified application. In accordance with 37 CFR 1.34(a), the signature appearing on the petition shall constitute a representation to the United States Patent and Trademark Office that he/she is authorized to represent the particular party in whose behalf he/she acts. However, if petitioner desires to receive future correspondence regarding this application, the appropriate power of attorney or authorization of agent must be submitted. A courtesy copy of this decision is being mailed to petitioner. Nevertheless, all future correspondence regarding this application file will be directed solely to the address of record until otherwise instructed.

It is not apparent whether the statement of unintentional delay was signed by a person who would have been in a position of knowing that the entire delay in filing the required reply from the due date for the reply until the filing of a grantable petition pursuant to 37 CFR 1.137(b) was unintentional. Nevertheless, in accordance with 37 CFR 10.18, the statement is accepted as constituting a certification of unintentional delay. However, in the event that petitioner has no knowledge that the delay was unintentional, petitioner must make such an inquiry to ascertain that, in fact, the delay was unintentional. If petitioner discovers that the delay was intentional, petitioner must so notify the Office.

The application file does not indicate a change of address has been filed in this case, although the address given on the petition differs from the address of record. A change of address should be filed in this case in accordance with MPEP 601.03. A courtesy copy of this decision is being mailed to the address noted on the petition. However, until otherwise instructed, all future correspondence regarding this application will be mailed solely to the address of record.

Telephone inquiries concerning this decision should be directed to the undersigned at (571) 272-1642.

This application is being referred to Technology Center AU 2167 for processing of the RCE and for appropriate action by the Examiner in the normal course of business on the amendment submitted in accordance with 37 CFR 1.114.

April M. Wise

April M. Wise
Petitions Examiner
Office of Petitions

Cc: JUN Y. LEE
3458 ELLICOTT CENTER DRIVE
SUITE 101
ELLICOT CITY, MD 21043

UNITED STATES PATENT AND TRADEMARK OFFICE

Commissioner for Patents
United States Patent and Trademark Office
P. O. Box 1450
Alexandria, VA 22313-1450
www.uspto.gov

Paper No. 7

Oppenheimer Wolff & Donnelly, LLP
840 Newport Center Drive
Suite 700
Newport Beach, CA 92660

COPY MAILED

OCT 0 2 2003

OFFICE OF PETITIONS

In re Application of	:	
Kevin Shearer, et al	:	
Application No. 10/412,431	:	ON PETITION
Filed: April 11, 203	:	
Attorney Docket No. 21940-13	:	

This is in response to the petition under 37 CFR 1.47(a), filed August 13, 2003.

The petition is granted.

Petitioner has shown that the non-signing inventor has refused to join in the filing of the above-identified application.

The above-identified application and papers have been reviewed and found in compliance with 37 CFR 1.47(a). This application is hereby accorded Rule 1.47(a) status.

As provided in 37 CFR 1.47(a), this Office will forward notice of this application's filing to the non-signing inventor at the address given in the petition. Notice of the filing of this application will also be published in the Official Gazette.

The application file is being forwarded to Technology Center 2800 for further processing.

Telephone inquiries regarding this decision should be directed to Marianne Morgan at (703) 306-3475.

Frances Hicks

Frances M. Hicks
Petitions Examiner
Office of Petitions
Office of the Deputy Commissioner
for Patent Examination Policy

UNITED STATES PATENT AND TRADEMARK OFFICE

Commissioner for Patents
United States Patent and Trademark Office
P. O. Box 1450
Alexandria, VA 22313-1450
www.uspto.gov

Robert Ziegler
2057 E. Weimaraner Way
Meridian, ID 83642

COPY MAILED

OCT 0 2 2003

OFFICE OF PETITIONS

In re Application of
Kevin Shearer; Mark Cole; and Robert Ziegler
Application No. 10/412,431
Filed: April 11, 2003
For: NOVEL ENHANCED SYSTEM FOR INTRAOCULAR LENS INSERTION

Dear Mr. Ziegler:

You are named as a joint inventor in the above-identified United States patent application, filed under the provisions of 35 U.S.C. 116 (United States Code), and 37 CFR 1.47(a), Rules of Practice in Patent Cases. Should a patent be granted on the application you will be designated therein as a joint inventor.

As a named inventor you are entitled to inspect any paper in the file wrapper of the application, order copies of all or any part thereof (at a prepaid cost per 37 CFR 1.19) or make your position of record in the application. Alternatively, you may arrange to do any of the preceding through a registered patent attorney or agent presenting written authorization from you. If you care to join the application, counsel of record (see below) would presumably assist you. Joining the application would entail the filing of an appropriate oath or declaration by you pursuant to 37 CFR 1.63.

Telephone inquiries regarding this communication should be directed to Marianne Morgan at (703) 306-3475. Requests for information regarding your application should be directed to the File Information Unit at (703) 308-2733. Information regarding how to pay for and order a copy of the application, or a specific paper in the application, should be directed to the Certification Division at (703) 308-9726 or 1 (800) 972-6382 (outside the Washington, DC area).

Frances Hicks

Frances M. Hicks
Lead Petitions Examiner
Office of Petitions
Office of the Deputy Commissioner
for Patent Examination Policy

cc: Oppenheimer Wolff & Donnelly, LLP
840 Newport Center Drive
Suite 700
Newport Beach, CA 92660

UNITED STATES PATENT AND TRADEMARK OFFICE

Commissioner for Patents
United States Patent and Trademark Office
P.O. Box 1450
Alexandria, VA 22313-1450
www.uspto.gov

In re Patent No. 6931652
Issue Date: August 16,2005
Application No. 10412440
Filed: April 11,2003
Attorney Docket No. 2598/0M725US0

:
:DECISION GRANTING PETITION
:UNDER 37 CFR 1.378(c)
:

This is a decision on the electronic petition, filed January 29,2010 ,under 37 CFR 1.378(c) to accept the unintentionally delayed payment of the 3.5 year maintenance fee for the above-identified patent.

The petition is **GRANTED**.

The maintenance fee is accepted, and the above-identified patent reinstated as of January 29,2010 .
This decision also constitutes notice that the fee has been accepted. An electronic copy of the petition and this decision has been created as an entry in the Image File Wrapper. Nevertheless, petitioner should print and retain an independent copy.

Telephone inquiries related to this electronic decision should be directed to the Electronic Business Center at 1-866-217-9197.

PTO/SB/66 (03-09)
Approved for use through 03/31/2012. OMB 0651-0016
U.S. Patent and Trademark Office: U.S. DEPARTMENT OF COMMERCE
Under the Paperwork Reduction Act of 1995, no persons are required to respond to a collection of information unless it displays valid OMB control number.

PETITION TO ACCEPT UNINTENTIONALLY DELAYED PAYMENT OF MAINTENANCE FEE IN AN EXPIRED PATENT (37 CFR 1.378(c))

Patent Number	Issue Date (YYYY-MM-DD)	Application Number	Filing Date (YYYY-MM-DD)	Docket Number (if applicable)
6,931,652	2005-08-16	10/412,440	2003-04-11	2598/0M725US0(StuartLee)

CAUTION: Maintenance fee (and surcharge, if any) payment must correctly identify: (1) the patent number and (2) the application number of the actual U.S. application leading to issuance of that patent to ensure the fee(s) is/are associated with the correct patent. 37 CFR 1.366(c) and (d).

SMALL ENTITY
☐ Patentee claims, or has previously claimed, small entity status. See 37 CFR 1.27.

LOSS OF ENTITLEMENT TO SMALL ENTITY STATUS
☐ Patentee is no longer entitled to small entity status. See 37 CFR 1.27(g)

NOT Small Entity		Small Entity	
Fee	Code	Fee	Code
◉ 3 ½ year	(1551)	○ 3 ½ year	(2551)
○ 7 ½ year	(1552)	○ 7 ½ year	(2552)
○ 11 ½ year	(1553)	○ 11 ½ year	(2553)

SURCHARGE
The surcharge required by 37 CFR 1.20(i)(2) (Fee Code 1558) must be paid as a condition of accepting unintentionally delayed payment of the maintenance fee.

MAINTENANCE FEE (37 CFR 1.20(e)-(g))
The appropriate maintenance fee must be submitted with this petition.

STATEMENT
THE UNDERSIGNED CERTIFIES THAT THE DELAY IN PAYMENT OF THE MAINTENANCE FEE TO THIS PATENT WAS UNINTENTIONAL

PETITIONER(S) REQUEST THAT THE DELAYED PAYMENT OF THE MAINTENANCE FEE BE ACCEPTED AND THE PATENT REINSTATED

THIS PORTION MUST BE COMPLETED BY THE SIGNATORY OR SIGNATORIES

37 CFR 1.378(d) states: "Any petition under this section must be signed by an attorney or agent registered to practice before the Patent and Trademark Office, or by the patentee, the assignee, or other party in interest."

I certify, in accordance with 37 CFR 1.4(d)(4) that I am

◉ An attorney or agent registered to practice before the Patent and Trademark Office

○ A sole patentee

○ A joint patentee; I certify that I am authorized to sign this submission on behalf of all the other patentees.

○ A joint patentee; all of whom are signing this e-petition

○ The assignee of record of the entire interest

Patent Practitioner			
A signature of the applicant or representative is required in accordance with 37 CFR 1.33 and 10.18. Please see 37 CFR 1.4(d) for the form of the signature			
Signature	/ Seok-Won Stuart Lee /	Date (YYYY-MM-DD)	2010-01-29
Name	Seok-Won Stuart Lee	Registration Number	61124

This collection of information is required by 37 CFR 1.378(c). The information is required to obtain or retain a benefit by the public which is to file (and by the USPTO to process) an application. Confidentiality is governed by 35 U.S.C. 122 and 37 CFR 1.11 and 1.14. This collection is estimated to take 1 hour to complete, including gathering, preparing, and submitting the completed application form to the USPTO. Time will vary depending upon the individual case. Any comments on the amount of time you require to complete this form and/ or suggestions for reducing this burden, should be sent to the Chief Information Officer, U.S. Patent and Trademark Office, U.S. Department of Commerce, P.O. Box 1450, Alexandria, VA 22313-1450. DO NOT SEND FEES OR COMPLETED FORMS TO THIS ADDRESS. **This form can only be used when in conjunction with EFS-Web. If this form is mailed to the USPTO, it may cause delays in reinstating the patent.**

Privacy Act Statement

The Privacy Act of 1974 (P.L. 93-579) requires that you be given certain information in connection with your submission of the attached form related to a patent application or patent. Accordingly, pursuant to the requirements of the Act, please be advised that: (1) the general authority for the collection of this information is 35 U.S.C. 2(b)(2); (2) furnishing of the information solicited is voluntary; and (3) the principal purpose for which the information is used by the U.S. Patent and Trademark Office is to process and/or examine your submission related to a patent application or patent. If you do not furnish the requested information, the U.S. Patent and Trademark Office may not be able to process and/or examine your submission, which may result in termination of proceedings or abandonment of the application or expiration of the patent.

The information provided by you in this form will be subject to the following routine uses:

1. The information on this form will be treated confidentially to the extent allowed under the Freedom of Information Act (5 U.S.C. 552) and the Privacy Act (5 U.S.C. 552a). Records from this system of records may be disclosed to the Department of Justice to determine whether the Freedom of Information Act requires disclosure of these records.

2. A record from this system of records may be disclosed, as a routine use, in the course of presenting evidence to a court, magistrate, or administrative tribunal, including disclosures to opposing counsel in the course of settlement negotiations.

3. A record in this system of records may be disclosed, as a routine use, to a Member of Congress submitting a request involving an individual, to whom the record pertains, when the individual has requested assistance from the Member with respect to the subject matter of the record.

4. A record in this system of records may be disclosed, as a routine use, to a contractor of the Agency having need for the information in order to perform a contract. Recipients of information shall be required to comply with the requirements of the Privacy Act of 1974, as amended, pursuant to 5 U.S.C. 552a(m).

5. A record related to an International Application filed under the Patent Cooperation Treaty in this system of records may be disclosed, as a routine use, to the International Bureau of the World Intellectual Property Organization, pursuant to the Patent Cooperation Treaty.

6. A record in this system of records may be disclosed, as a routine use, to another federal agency for purposes of National Security review (35 U.S.C. 181) and for review pursuant to the Atomic Energy Act (42 U.S.C. 218(c)).

7. A record from this system of records may be disclosed, as a routine use, to the Administrator, General Services, or his/her designee, during an inspection of records conducted by GSA as part of that agency's responsibility to recommend improvements in records management practices and programs, under authority of 44 U.S.C. 2904 and 2906. Such disclosure shall be made in accordance with the GSA regulations governing inspection of records for this purpose, and any other relevant (i.e., GSA or Commerce) directive. Such disclosure shall not be used to make determinations about individuals.

8. A record from this system of records may be disclosed, as a routine use, to the public after either publication of the application pursuant to 35 U.S.C. 122(b) or issuance of a patent pursuant to 35 U.S.C. 151. Further, a record may be disclosed, subject to the limitations of 37 CFR 1.14, as a routine use, to the public if the record was filed in an application which became abandoned or in which the proceedings were terminated and which application is referenced by either a published application, an application open to public inspections or an issued patent.

9. A record from this system of records may be disclosed, as a routine use, to a Federal, State, or local law enforcement agency, if the USPTO becomes aware of a violation or potential violation of law or regulation.

UNITED STATES PATENT AND TRADEMARK OFFICE

Commissioner for Patents
United States Patent and Trademark Office
P.O. Box 1450
Alexandria, VA 22313-1450
www.uspto.gov

WOODCOCK WASHBURN LLP
ONE LIBERTY PLACE – 46TH FLOOR
PHILADELPHIA, PA 19103

COPY MAILED

MAY 12 2006

OFFICE OF PETITIONS

In re Application of	:	
Mohammad Ali Jabbary	:	
Application No. 10/412,455	:	DECISION ON PETITION
Filed: April 11, 2003	:	TO WITHDRAW
Attorney Docket No. BELL-0309/99178C1	:	FROM RECORD
	:	

This is a decision on the Request to Withdraw as attorney or agent of record under 37 C.F.R. § 1.36(b), filed August 9, 2005.

The request is **NOT APPROVED** as moot.

A review of the file record indicates that the power of attorney to Jonathan M. Waldman and others has been revoked by the assignee of the patent application. Accordingly, the request to withdraw under 37 C.F.R. § 1.36(b) is moot.

There is a Notice of Allowance mailed March 2, 2006 that requires a reply from the applicant.

All future communications from the Office will continue to be directed to the first below-listed address until otherwise notified by applicant.

Telephone inquires concerning this decision should be directed to Irvin Dingle at 571-272-3210.

Denise Pothier
Petitions Examiner
Office of Petitions

cc: Bellsouth Intellectual Property Corporation
824 Market Street, Suite 901
Wilmington, DE 19801

cc: Potomac Patent Group, PLLC
P.O. Box 270
Fredericksburg, VA 22404

UNITED STATES PATENT AND TRADEMARK OFFICE

Commissioner for Patents
United States Patent and Trademark Office
P.O. Box 1450
Alexandria, VA 22313-1450
www.uspto.gov

NETWORK APPLICATIONS
495 E. JAVA DRIVE
SUNNYVALE CA 94089

COPY MAILED

NOV 20 2007

OFFICE OF PETITIONS

In re Application of
RAJAN, Vijayan
Application No. 10/412,478
Filed: April 11, 2003
Attorney Docket No. **112056-0079**

: DECISION GRANTING PETITION
: UNDER 37 CFR 1.313(c)(2)

This is a decision on the petition under 37 CFR 1.313(c)(2), filed November 15, 2007, to withdraw the above-identified application from issue after payment of the issue fee.

The petition is **GRANTED.**

The above-identified application is withdrawn from issue for consideration of a submission under 37 CFR 1.114 (request for continued examination). *See* 37 CFR 1.313(c)(2).

Petitioner is advised that the issue fee paid on November 1, 2007 cannot be refunded. If, however, this application is again allowed, petitioner may request that it be applied towards the issue fee required by the new Notice of Allowance.[1]

The petition is not signed by an attorney of record. Nevertheless, in accordance with 37 CFR 1.34, the signature of Ms. Shannen C. Delaney appearing on the correspondence shall constitute a representation to the United States Patent and Trademark Office that she is authorized to represent the particular party on whose behalf she acts. If Ms. Delaney desires to receive future correspondence regarding this file, the appropriate power of attorney documents must be submitted. A courtesy copy of this decision is being mailed to petitioner herein. However, until otherwise instructed, all future correspondence regarding this application file will be directed solely to the above-noted correspondence address of record.

Telephone inquiries should be directed to Monica A. Graves at (571) 272-7253.

This application is being referred to Technology Center AU 2189 for processing of the request for continued examination under 37 CFR 1.114 and for consideration of the concurrently filed information disclosure statement.

Frances Hicks
Frances Hicks
Petitions Examiner
Office of Petitions

cc: **SHANNEN C. DELANEY**
CESARI AND MCKENNA, LLP
88 BLACK FALCON AVENUE
BOSTON, MA 02210-2414

---

[1] *The request to apply the issue fee to the new Notice may be satisfied by completing and returning the new Part B – Fee(s) Transmittal Form (along with any balance due at the time of submission). Petitioner is advised that the Issue Fee Transmittal Form* ***must*** *be completed and timely submitted to avoid abandonment of the application.*

UNITED STATES PATENT AND TRADEMARK OFFICE

COMMISSIONER FOR PATENTS
UNITED STATES PATENT AND TRADEMARK OFFICE
P.O. BOX 1450
ALEXANDRIA, VA 22313-1450
www.uspto.gov

CHRISTINE W. TREBILCOCK
COHEN & GRIGSBY, P.C.
15TH FLOOR
11 STANWIX STREET
PITTSBURGH, PA 15222

COPY MAILED

DEC 2 2 2003

OFFICE OF PETITIONS

In re Application of
Chen-Chou Chiang, et al.
Application No. 10/412,502
Filed: April 11, 2003
Attorney Docket No. 02-254 CIP/CIP

DECISION GRANTING PETITION
UNDER 37 CFR 1.137(b)

This is a decision on the petition, filed October 30, 2003, under 37 CFR 1.137(b) to revive the instant nonprovisional application for failure to timely notify the U.S. Patent and Trademark (USPTO) of the filing of an application in a foreign country, or under a multinational treaty that requires publication of applications eighteen months after filing. *See* 37 CFR 1.137(f).

The petition is **GRANTED**.

Petitioner states that the instant nonprovisional application is the subject of an application filed in an eighteen month publication country on July 29, 2003. However, the USPTO was unintentionally not notified of this filing within 45 days subsequent to the filing of the subject application in an eighteen month publication country.

In view of the above, this application became abandoned pursuant to 35 U.S.C. § 122(b)(2)(B)(iii) and 37 CFR 1.213(c) for failure to timely notify the Office of the filing of an application in a foreign country or under a multilateral international agreement that requires publication of applications 18 months after filing.

A petition to revive an application abandoned pursuant to 35 U.S.C. 122(b)(2)(B)(iii) for failure to notify the USPTO of a foreign filing must be accompanied by:

(1) the required reply which is met by the notification of such filing in a foreign country or under a multinational treaty;
(2) the petition fee as set forth in 37 CFR 1.17(m); and
(3) a statement that the entire delay in filing the required reply from the due date of the reply until the filing of a grantable petition was unintentional.

The instant petition has been found to be in compliance with 37 CFR 1.137(b). Accordingly, the failure to timely notify the USPTO of a foreign or international filing within 45 days after the date of filing of such foreign or international application as provided by 35 U.S.C. § 122(b)(2)(B)(iii) and 37 CFR 1.213(c) is accepted as having been unintentionally delayed.

The previous Request and Certification under 35 U.S.C. § 122(b)(2)(B)(i) has been rescinded. A Notice Regarding Rescission of Nonpublication Request which sets forth the projected publication date of April 1, 2004 accompanies this decision on petition.

Any inquiries concerning this decision may be directed to Sherry D. Brinkley at (703) 305-9220.

This application is being referred to Technology Center Art Unit 1621 for examination in due course.

Sherry D. Brinkley
Petitions Examiner
Office of Petitions
Office of the Deputy Commissioner
for Patent Examination Policy

ATTACHMENT: Notice Regarding Rescission of Nonpublication Request

UNITED STATES PATENT AND TRADEMARK OFFICE

Commissioner for Patents
United States Patent and Trademark Office
P.O. Box 1450
Alexandria, VA 22313-1450
www.uspto.gov

FROST BROWN TODD LLC
2200 PNC Center
201 E. Fifth Street
Cincinnati, Ohio 45202-4182

MAILED

SEP 1 8 2006

Technology Center 2100

In re Application of:
Jintai Ding
Application No. 10/412,540
Filed: April 11, 2003
For: MULTIVARIABLE CRYPTOSYSTEM

DECISION ON REQUEST TO WITHDRAW AS ATTORNEY OR AGENT

This is a decision on the Request To Withdraw from Representation filed July 13, 2006.

A grantable request to withdraw as attorney of record should indicate thereon the present mailing addresses of the attorney(s) who is/are withdrawing from the record and of the applicant. The request for withdrawal must be signed by every attorney seeking to withdraw or contain a clear indication that one attorney is signing on behalf of another/others. A request to withdraw will not be approved unless at least 30 (thirty) days would remain between the date of approval and the later of the expiration date of a time to file a response or the expiration date of the maximum time period which can be extended under 37 C.F.R. § 1.136(a). The effective date of withdrawal is the date of decision and not the date of request. See M.P.E.P. § 402.06. 37 C.F.R. § 10.40(a) further requires that the applicant or patent owner be notified of the withdrawal of the attorney or agent.

The request is **GRANTED**.

All future communications from the U.S. Patent and Trademark Office (Office) will be directed to the below-listed address until otherwise notified by applicant. This correspondence address is provided by the withdrawn attorney(s). Applicant is reminded of the obligation to promptly notify the Office of any change in correspondence address to ensure receipt of all communications from the Office.

Michelle R. Eason

Vincent N. Trans
Special Program Examiner
Technology Center 2100
Computer Architecture, Software, and
Information Security
571-272-3613

cc: Jintai Ding, Ph.D
8190 Margaret Lane
Cincinnati, Ohio 45242

UNITED STATES PATENT AND TRADEMARK OFFICE

Commissioner for Patents
United States Patent and Trademark Office
P.O. Box 1450
Alexandria, VA 22313-1450
www.uspto.gov

TOWNSEND AND TOWNSEND AND CREW. LLP
TWO EMBARCADERO CENTER
EIGHTH FLOOR
SAN FRANCISCO CA 94111-3834

MAILED

FEB 0 2 2009

OFFICE OF PETITIONS

In re Application of	:	
Russell Aaron HOUSER, et al	:	
Application No. 10/412,558	:	DECISION ON PETITION
Filed: April 11, 2003	:	
Attorney Docket No. 021464-000140US	:	

This is a decision on the petition under the unintentional provisions of 37 CFR 1.137(b), filed January 12, 2009, to revive the above-identified application.

The petition is **GRANTED**.

The application became abandoned for failure to reply in a timely manner to the non-final Office action mailed, April 8, 2008, which set a shortened statutory period for reply of three (3) months. No extensions of time under the provisions of 37 CFR 1.136(a) were obtained. Accordingly, the application became abandoned on July 9, 2008.

The petition satisfies the requirements of 37 CFR 1.137(b) in that petitioner has supplied (1) the reply in the form of an amendment, (2) the petition fee of $810; and (3) an adequate statement of unintentional delay.

37 CFR 1.137(b)(3) requires a statement that "the entire delay in filing the required reply from the due date for the reply until the filing of a grantable petition pursuant to 37 CFR 1.137(b) was unintentional." Since the statement appearing in the petition varies from the language required by 37 CFR 1.137(b)(3), the statement is being construed as the required statement. Petitioner must notify the Office if this is **not** a correct reading of the statement appearing in the petition.

Telephone inquiries concerning this decision should be directed to Diane Goodwyn at (571) 272-6735.

This application is being referred to Technology Center AU 3773 for appropriate action by the Examiner in the normal course of business on the reply received January 12, 2009.

Thurman Page
Petitions Examiner
Office of Petitions

UNITED STATES PATENT AND TRADEMARK OFFICE

Commissioner for Patents
United States Patent and Trademark Office
P.O. Box 1450
Alexandria, VA 22313-1450
www.uspto.gov

COPY MAILED
DEC 27 2006
OFFICE OF PETITIONS

SCHWEGMAN, LUNDBERG, WOESSNER & KLUTH, P.A.
P.O. BOX 2938
MINNEAPOLIS MN 55402

In re Application of :
WONG :
Application No. 10/412,566 : ON PETITION
Filed: April 11, 2003 :
For: STATIC RANDOM ACCESS MEMORY :

This is a decision on the petition filed August 14, 2006, which is being treated as a petition under 37 CFR 1.181 to withdraw the holding of abandonment. The delay in treating this petition is regretted.

The petition considered under 37 CFR 1.181 is **granted.**

This application apparently became abandoned by operation of 35 U.S.C. § 133 for failure to submit a proper submission within the meaning of 37 CFR 1.114 with an otherwise timely filed RCE on March 17, 2005, in reply to the Notices of Allowance and Allowability mailed December 17, 2004.

The Notice of Improper Request for Continued Examination Abandonment mailed July 11, 2006, contended that a submission was lacking notwithstanding the concurrent receipt on March 17, 2005, of a petition to expunge the concurrently filed IDS submitted under the provisions of MPEP 724.02, and the USPTO creation of an artifact folder for the instant application with an indicated artifact receipt date of March 17, 2005, with the code appropriate for a confidential IDS submitted under MPEP 724.02.

An adequately itemized postcard receipt bearing a USPTO date stamp will be accepted as prima facie evidence of receipt of a supposedly missing document(s), per MPEP 503. Here, the petition containing a copy of the postcard receipt clearly establishes USPTO receipt of an adequate submission (i.e., a confidential IDS) along with the RCE request and petition to expunge at the USPTO on March 17, 2005. The Notice of Improper RCE is **vacated** as mailed in error. The Notice of Abandonment was likewise mailed in error and is hereby **withdrawn**.

This application is being brought to the attention of the Technology Center for processing the RCE, confidential IDS, and the petition under 37 CFR 1.59 to expunge material submitted as part of an IDS, all filed March 17, 2005. See MPEP 1002.02(c), ¶ 17.

Telephone inquiries related to this communication should be directed to the undersigned at (571) 272-3217.

Brian Hearn
Petitions Examiner
Office of Petitions

10/412580

SPE RESPONSE FOR CERTIFICATE OF CORRECTION

Paper No.: _____

DATE : 1-19-06

TO SPE OF : ART UNIT 2883

SUBJECT : Request for Certificate of Correction on Patent No.: 6947656

A response is requested with respect to the accompanying request for a certificate of correction.

Please complete this form and return with file, within **7** days to:
Certificates of Correction Branch ~~PK 3-922~~ 9A22 South T
Palm location **7580** - Tel. No. 305-8309

With respect to the change(s) requested, correcting Office and/or Applicant's errors, should the patent read as shown in the certificate of correction? No new matter should be introduced, nor should the scope or meaning of the claims be changed.

Check claims

Thank You For Your Assistance

Certificates of Correction Branch

The request for issuing the above-identified correction(s) is hereby:

Note your decision on the appropriate box.

- ☑ **Approved** — **All** changes apply.
- ☐ **Approved in Part** — Specify below which changes **do not** apply.
- ☐ **Denied** — State the reasons for denial below.

Comments:

SPE

2883
Art Unit

PTOL-306 (REV. 7/03)

U.S. DEPARTMENT OF COMMERCE Patent and Trademark Office

UNITED STATES PATENT AND TRADEMARK OFFICE

Commissioner for Patents
United States Patent and Trademark Office
P.O. Box 1450
Alexandria, VA 22313-1450
www.uspto.gov

VERTEX PHARMACEUTICALS INC.
130 WAVERLY STREET
CAMBRIDGE MA 02139-4242

COPY MAILED
OCT 1 3 2006
OFFICE OF PETITIONS

In re Application of :
Janos Pitlik et al. :
Application No. 10/412,600 : ON PETITION
Filed: April 11, 2003 :
Attorney Docket No. **VPI/02-107 US** :

This is a decision on the petition filed September 13, 2006, to revive the above identified application under 37 CFR 1.137(b)[1].

The petition under 37 CFR 1.137(b) is **GRANTED**.

This application became abandoned February 10, 2006, for failure to file a timely response to the Office action in accordance with *Ex parte Quayle*,[2] mailed on December 9, 2005, which set a two (2) month period for reply. No extensions of the time for reply in accordance with 37 CFR 1.136(a) were obtained. Accordingly, a Notice of Abandonment was mailed July 28, 2006.

The petition fee in the amount of $1500.00 has been applied to the finance records for the instant patent application.

The amendment in response to the Office Action filed December 13, 2006 will be referred to Technology Center 1626 for further processing.

Telephone inquiries concerning this matter may be directed to the undersigned Petitions Attorney at (571) 272-3212.

Patricia Faison-Ball
Senior Petitions Attorney
Office of Petitions

---

[1]Effective December 1, 1997, the provisions of 37 CFR 1.137(b) now provide that where the delay in reply was unintentional, a petition may be filed to revive an abandoned application or a lapsed patent pursuant to 37 CFR 1.137(b). A grantable petition filed under the provisions of 37 CFR 1.137(b) must be accompanied by:

(1) the required reply, unless previously filed. In a nonprovisional application abandoned for failure to prosecute, the required reply may be met by the filing of a continuing application. In an application or patent, abandoned or lapsed for failure to pay the issue fee or any portion thereof, the required reply must be the payment of the issue fee or any outstanding balance thereof.

(2) the petition fee as set forth in 37 CFR 1.17(m);

(3) a statement that the entire delay in filing the required reply from the due date for the reply until the filing of a grantable petition pursuant to 37 CFR 1.137(b) was unintentional. The Commissioner may required additional information where there is a question whether the delay was unintentional; and

(4) any terminal disclaimer (and fee as set forth in 37 CFR 1.20(d)) required pursuant to 37 CFR 1.137(c)).

[2]1935 C.D. 11, 453 O.G. 213.

UNITED STATES PATENT AND TRADEMARK OFFICE

Commissioner for Patents
United States Patent and Trademark Office
P.O. Box 1450
Alexandria, VA 22313-1450
www.uspto.gov

SEP 21 2004

In re Application of Jared Starling et al. Serial Number: 10/412,602 Filed: April 11, 2003 For: ROBUST CHEMIRESISTOR SENSOR	: : : : :	PETITION UNDER M.P.E.P.708.02 IV

This is in response to the petition filed July 24, 2003, requesting that the above-identified application be granted Special Status under Section 708.02 IV of the MPEP and 37 CFR 1.102(c) **(no fee required)**.

The request for Special Status considered under Section 708.02 IV is granted because criteria under 37 CFR 1.102(c) has been met.

Accordingly the petition is **GRANTED.**

Marian C. Knode

Marian C. Knode, Special Programs Examiner
Technology Center 1700
Chemical and Materials Engineering

HARNESS, DICKEY & PIERCE, P.L.C.
P.O. BOX 828
BLOOMFIELD HILLS MI 48303

UNITED STATES PATENT AND TRADEMARK OFFICE

Commissioner for Patents
United States Patent and Trademark Office
P.O. Box 1450
Alexandria, VA 22313-1450
www.uspto.gov

Squire, Sanders & Dempsey L.L.P.
1 Maritime Plaza, Suite 300
San Francisco, CA 94111

MAILED

SEP 30 2009

OFFICE OF PETITIONS

In re Patent No. 6,994,464 :
Issue Date: February 7, 2006 :
Application No. 10/412,605 : NOTICE
Filed: April 10, 2003 :
Attorney Docket No. 85639.11 :

This is a notice regarding your request for acceptance of a fee deficiency submission under 37 CFR 1.28 filed August 5, 2009. On September 1, 1998, the Court of Appeals for the Federal Circuit held that 37 CFR 1.28(c) is the sole provision governing the time for correction of the erroneous payment of the issue fee as a small entity. **See DH Technology v. Synergystex International, Inc. 154 F.3d 1333, 47 USPQ2d 1865 (Fed. Cir. Sept. 1, 1998).**

The Office no longer investigates or rejects original or reissue applications under 37 CFR 1.56. **1098 Off. Gaz. Pat. Office 502 (January 3, 1989)**. Therefore, nothing in this Notice is intended to imply that an investigation was done.

The petition is **DISMISSED**.

The petition is not acceptable because the signature on the petition Gillian Gascoigne was not signed by a proper party. See 37 CFR 1.33(b) which states:

> (b) Amendments and other papers. Amendments and other papers, except for written assertions pursuant to § 1.27(c)(2)(ii) of this part, filed in the application must be signed by:
> (1) A registered patent attorney or patent agent of record appointed in compliance with § 1.32(b);
> (2) A registered patent attorney or patent agent not of record who acts in a representative capacity under the provisions of § 1.34;
> (3) An assignee as provided for under §3.71(b) of this chapter; or
> (4) All of the applicants (§ 1.41(b)) for patent, unless there is an assignee of the entire interest and such assignee has taken action in the application in accordance with § 3.71 of this chapter.

Telephone inquiries related to this decision should be directed to the Kimberly Inabinet at (571) 272-4618.

Carl Friedman
Petitions Examiner
Office of Petitions

UNITED STATES PATENT AND TRADEMARK OFFICE

COMMISSIONER FOR PATENTS
UNITED STATES PATENT AND TRADEMARK OFFICE
P.O. BOX 1450
ALEXANDRIA, VA 22313-1450
www.uspto.gov

COPY MAILED
AUG 0 5 2005
OFFICE OF PETITIONS

EDWARDS & ANGELL, LLP
P.O. BOX 55874
BOSTON, MA 02205

In re Application of :
Jochen Heber, et al. :
Application No. 10/412,629 : ON PETITION
Filed: April 11, 2003 :
Attorney Docket No. 52029 (70329) :

This is a decision on the petition to revive under 37 CFR 1.137(b), filed April 22, 2005, which is being treated as a petition to withdraw the holding of abandonment.

The petition is **GRANTED**.

The application was held abandoned for a failure to timely respond to a Notice to File Missing Parts mailed June 10, 2003. The notice required the statutory basic filing fee, additional claim fees, an oath or declaration under 37 CFR 1.63 and the requisite surcharge under 37 CFR 1.16(e). A Notice of Abandonment was mailed on August 27, 2004.

On October 22, 2004 applicant submitted a request to withdraw the holding of abandonment, stating that a response was filed on January 16, 2004. The request was, in effect, dismissed in a communication mailed November 23, 2004. In response on April 22, 2005, the present petition was filed. Petitioner submits a copy of the response, as well as a postcard receipt therefore dated January 16, 2004. It is noted that the response filed January 16, 2004 includes a Certificate of Mailing under 37 CFR 1.8 dated January 12, 2004. Further, it is noted that, while the copy of the Notice mailed June 10, 2003 in the above-identified application was included with the response filed January 16, 2004, the transmittal letter, declaration and the copy of the postcard receipt refer to an incorrect application number.

Nevertheless, a response that has an incorrect application number is handled in accordance with MPEP 508.03. If a paper having an incorrect application number contains sufficient information to identify the correct application and it was timely filed, the holding of abandonment will be withdrawn. In reviewing the papers submitted, it is concluded that the information contained thereon, together with a copy of the Notice mailed June 10, 2003, was sufficient to associate the papers with the correct application.

In view of the above, the holding of abandonment is hereby withdrawn and the application restored to pending status.

It is noted that the $770 filing fee, $86 additional claim fee, $130 surcharge, $2,010 extension of time fee and the $40 fee for recording the assignment filed January 16, 2004 were applied to the incorrect application; however, filing fee and surcharge were refunded on February 11, 2004, for a total refund of $900. The filing fee and surcharge are required in this application. Since the $1500 petition fee submitted with the present petition is subject to a refund, petitioner is advised that fees totaling $900 will be deducted from the $1500 petition fee and applied to the $770 filing fee and the $130 surcharge. The $600 balance of the petition fee will refunded in the form of a credit to counsel's deposit account. The $2,010 extension of time fee, $86 additional claim fee and the $40 assignment fee will be reapplied to this application.

The application is being referred to the Office of Initial Patent Examination (OIPE) for further processing using the declaration filed April 22, 2005.

Telephone inquires related to this decision should be directed to the undersigned at (571) 272-3204. Telephone inquiries related to OIPE processing should be directed to their hotline at (703) 308-1202.

Sherry D. Brinkley

Sherry D. Brinkley
Petitions Examiner
Office of Petitions
Office of the Deputy Commissioner
for Patent Examination Policy

UNITED STATES PATENT AND TRADEMARK OFFICE

Commissioner for Patents
United States Patent and Trademark Office
P.O. Box 1450
Alexandria, VA 22313-1450
www.uspto.gov

CALFEE HALTER & GRISWOLD, LLP
800 SUPERIOR AVENUE
SUITE 1400
CLEVELAND, OH 44114

COPY MAILED

DEC 0 8 2004

OFFICE OF PETITIONS

In re Application of	:
Giustino et al.	:
Application No. 10/412,632	: DECISION GRANTING PETITION
Filed: April 11, 2003	: UNDER 37 CFR 1.78(a)(6)
Attorney Docket No. 18894/04570	:

This is a decision on the petition under 37 CFR 1.78(a)(6), filed October 8, 2004, to accept an unintentionally delayed claim under 35 U.S.C. §119(e) ***only*** for the benefit of prior-filed provisional Application No. 60/371,884, filed on April 11, 2002, as set forth in the concurrently filed amendment.

The petition is **GRANTED**.

A petition under 37 CFR 1.78(a)(6) is only applicable to those applications filed on or after November 29, 2000. Further, the petition is appropriate only after expiration of the period specified in 37 CFR 1.78(a)(5)(ii) and must be filed during the pendency of the nonprovisional application. In addition, the petition must be accompanied by:

(1) the reference required by 35 U.S.C. § 119(e) and 37 CFR 1.78(a)(5)(i) to the prior-filed application, unless previously submitted;
(2) the surcharge set forth in § 1.17(t); and
(3) a statement that the entire delay between the date the claim was due under 37 CFR 1.78(a)(5)(ii) and the date the claim was filed was unintentional. The Commissioner may require additional information where there is a question whether the delay was unintentional.

The instant pending nonprovisional application was filed on April 11, 2003, within twelve months of the filing date of the above-noted, prior-filed provisional application, which was filed on April 11, 2002, for which priority is claimed. A reference to the above-noted, prior-filed provisional application has been included in an amendment to the first sentence of the specification following the title.

The instant nonprovisional application was filed after November 29, 2000, and the claim for priority herein is submitted after expiration of the period specified in 37 CFR 1.78(a)(5)(ii). Also, the reference to the above-noted, prior-filed provisional application was submitted during the pendency of the nonprovisional application for which the benefit is sought. *See* 35 U.S.C. §119(e). Accordingly, having found that the instant petition satisfies the conditions of 37 CFR 1.78(a)(6) for acceptance of an unintentionally delayed claim for priority under 35 U.S.C. §119(e), the petition to accept an unintentionally delayed claim of benefit to prior-filed provisional Application No. 60/371,884 is granted.

The granting of the petition to accept the delayed benefit claim to the prior-filed application under 37 CFR 1.78(a)(6) should not be construed as meaning that the instant application is entitled to the benefit of the filing date of the prior-filed application. In order for the instant application to be entitled to the benefit of the prior-filed application, all other requirements under 35 U.S.C. §119(e) and 37 CFR 1.78(a)(4) and (a)(5) must be met. Similarly, the fact that the corrected Filing Receipt accompanying this decision on petition includes the prior-filed application should not be construed as meaning that applicant is entitled to the claim for benefit of priority to the prior-filed application noted thereon. Accordingly, the examiner will, in due course, consider this benefit claim and determine whether the instant application is entitled to the benefit of the earlier filing date.

A corrected Filing Receipt, which includes the priority claim to the above-noted, prior-filed provisional application, accompanies this decision on petition.

Any inquiries concerning this decision may be directed to Paralegal Liana Chase at (571) 272-3206.

The application is being forwarded to Technology Center AU 1753 for appropriate action on the amendment submitted October 8, 2004, including consideration by the examiner of the claim under 35 U.S.C. §119(e) for the benefit of priority to prior-filed provisional Application No. 60/371,884.

Frances Hicks

Frances Hicks
Petitions Examiner
Office of Petitions
Office of the Deputy Commissioner
for Patent Examination Policy

ATTACHMENT: Corrected Filing Receipt

UNITED STATES
PATENT AND
TRADEMARK OFFICE

Commissioner for Patents
Washington, DC 20231
www.uspto.gov

5/27/03

Bromberg and Sunstein LLP
125 Summer Street
Boston MA 02110-1618

Dear Applicant:

The Box PGPub replacement drawings for application number 10/412,658 received on 5/8/03 by the U. S. Patent and Trademark Office will be included for patent publication.

Telephone inquiries should be directed to Customer Service, Office of Initial Patent Examination, at 703-308-1202.

10412658 .050803

UNITED STATES
PATENT AND
TRADEMARK OFFICE

Commissioner for Patents
Washington, DC 20231
www.uspto.gov

Signature of Reviewer, Office of Initial Patent Examination

UNITED STATES PATENT AND TRADEMARK OFFICE

Commissioner for Patents
United States Patent and Trademark Office
P.O. Box 1450
Alexandria, VA 22313-1450
www.uspto.gov

Fortune Law Group
100 Century Center Court, Suite 315
San Jose, CA 95112

Paper No. 11

COPY MAILED

AUG 1 1 2005

OFFICE OF PETITIONS

In re Application of
Li
Application No. 10/412,661
Filed: April 11, 2003
Attorney Docket No. AMS 001

DECISION
ON PETITION

This is a decision on the petition under 37 CFR 1.137(b), filed May 9, 2005, to revive the above-identified application.

The petition is **DISMISSED** as moot.

The above-identified application was held abandoned for failure to reply in a timely manner to a Notice to File Missing Parts of Nonprovisional Application mailed August 25, 2003, which set a period for reply of two (2) months. No extensions of time under the provisions of 37 CFR 1.136(a) were obtained. Accordingly, the application went abandoned on October 26, 2003.

A petition to withdraw the holding of abandonment was filed on August 26, 2004 based on failure to receive the Notice to File Missing Parts of Nonprovisional Application. On May 12, 2005, the petition to withdraw the holding of abandonment was granted, and a new Notice to File Missing Parts was mailed. Since the holding of abandonment has been withdrawn, the petition to revive the above-identified application under 37 CFR 1.137(b) has become moot.

In view of the dismissal of the petition to revive as moot, the $750 fee submitted is unnecessary. Accordingly, petitioner may request a refund of the $750 petition fee submitted by writing to the Office of Finance at Mail Stop 16, Commissioner for Patents, P.O. Box 1450, Alexandria, VA 22313-1450. A copy of this decision should accompany petitioner's request.

Telephone inquiries concerning this decision should be directed to Denise Pothier at (571) 272-4787.

A reply to the Notice of May 12, 2005 was received on July 14, 2005 (certificate of mailing date of July 12, 2005). Accordingly, this application is being forwarded to the Office of Initial patent Examination for pre-examination processing.

Frances Hicks

Frances Hicks
Petitions Examiner
Office of Petitions

Best Available Copy

UNITED STATES PATENT AND TRADEMARK OFFICE

UNITED STATES DEPARTMENT OF COMMERCE
United States Patent and Trademark Office
Address: COMMISSIONER FOR PATENTS
P.O. Box 1450
Alexandria, Virginia 22313-1450
www.uspto.gov

APPLICATION NO.	FILING DATE	FIRST NAMED INVENTOR	ATTORNEY DOCKET NO.	CONFIRMATION NO.
10/412,666	04/14/2003	Axel Doerwald	12946-003	4262

1059 7590 12/16/2008
BERESKIN AND PARR
40 KING STREET WEST
BOX 401
TORONTO, ON M5H 3Y2
CANADA

EXAMINER
FISHER, PAUL R

ART UNIT	PAPER NUMBER
3689	

MAIL DATE	DELIVERY MODE
12/16/2008	PAPER

Please find below and/or attached an Office communication concerning this application or proceeding.

The time period for reply, if any, is set in the attached communication.

Best Available Copy

UNITED STATES PATENT AND TRADEMARK OFFICE

Commissioner for Patents
United States Patent and Trademark Office
P.O. Box 1450
Alexandria, VA 22313-1450
www.uspto.gov

DEC 16 2008

Ian C. McMillan
Bereskin and Parr
40 King Street West
Box 401
Toronto, On M5H 3Y2
Canada

In re Application of:	:	**DECISION ON PETITION**
Axel Doerwald et al.	:	**UNDER 37 CFR 1.181**
Application No. 10/412,666	:	
Filed: April 14, 2003	:	
Attorney Docket No.: 1246-003	:	
For: METHOD AND SYSTEM FOR FOR ENHANCING CUSTOMER LOYALTY	:	

This is in response to applicant's petition under 37 CFR 1.181 filed June 13, 2008 requesting withdrawal of the finality of the Office action mailed April 15, 2008 as being premature.

The Petition is **DISMISSED.**

Applicant alleges that the final rejection mailed June 13, 2008 is premature because the examiner introduces a new ground of rejection that is neither necessitated by applicant's amendments of the claims nor based on information submitted in information submitted in an information disclosure statement (IDS) filed during the period set forth in 37 CFR 1.97(c) with the fee set forth in 37 CFR 1.17(p).

MPEP 706.07(a) sets forth that the second or any subsequent action on the merits shall be made final except where the examiner introduces a new ground of rejection that is neither necessitated by applicants' amendment nor based on information submitted in an information disclosure statement filed during the period set forth in 37 CFR 1.97(c) with the fee set forth in 37 CFR 1.17(p). MPEP 1207.03 sets forth that there is no new ground of rejection when the basic thrust of the rejection remains the same such that an appellant has been given a fair opportunity to react to the rejection. See In re Kronig, 539 F.2d 1300, 1302-03, 190 USPQ 425, 426-27 (CCPA 1976). MPEP 1207.03 sets forth that where the statutory basis for the rejection remains the same, and the evidence relied upon in support of the rejection remains the same, a change in the discussion of, or rationale in support of, the rejection does not necessarily constitute a new ground of rejection.

Best Available Copy

A review of the record reveals that examiner's finality of the Office Action mailed April 15, 2008 is proper for the reasons set forth below.

Applicant contends in this instant petition that the applicant has not been given a fair opportunity to react to the latest rejection (the Final Rejection mailed April 15, 2008) given the implausible reasons provided for combining the references in the first office action were not repeated in the final office action. A review of the record shows that the first Office Action (non-final) mailed October 10, 2007 rejected claims 1-2 and 17-19 under 35 USC 102(b) as being anticipated by Bacque. Claims 3-16 and 20-29 were rejection under 35 USC 103(a) as being unpatentable over Bacque in view of McCall et. al.

Applicant submits in this petition that in this first action on the merits, the Examiner offered the following motivation for combining the cited art:

> It would have been obvious to one of ordinary skill in the art at the time [the] invention was made to modify the weighing system of Bacque with customer-specific reward information specifying an associated discount, as taught by McCall et al. in order to enhance customer loyalty and drive further sales (particularly in light of the fact that weigh stations tend to be in the same location as fueling stations, with similar opportunities to cross-market the customers).

Thus, the applicant submits that the examiner presented two motivations for combination in the October 10, 2007 Office Action:

> (i) enhanced customer loyalty; and (ii) increased sales.

In the response submitted by applicant on January 9, 2008, the applicant amended independent claim 1 (which combined the limitations of cancelled claims 1, 2, and 12) and independent claim 17 (which combined the limitations of cancelled claims 17, 18, and 25). In the response to arguments/remarks submitted on January 9, 2008, the applicant contested the existence of the motivations set forth in the rejection arguing, *inter alia,* that the system described in Bacque is not concerned with either customer loyalty or sales and that there were no valid grounds to support loyalty as motivation for combining the cited art.

In the Office Action mailed April 15, 2008, the Examiner made the Office Action final rejecting claims 1, 3-11, 13-17, 19-24, and 26-29 under 35 USC 103(a) as being unpatentable over Bacque in view of McCall.

The applicant submits in this instant petition that the Examiner provided the following motivation to combine in the April 15, 2008 final Office action:

> Therefore ... it would have been obvious to one of ordinary skill in the art at the time the invention was made to modify the weighing system of

Best Available Copy

> Bacque with customer-specific rewards information specifying an associated discount, as taught by McCall et al. for the purpose of providing loyal users of the system to receive rewards for their proper and continued use of the system. (emphasis added)
>
> Also it would have been obvious that other services could also provide a discount for abiding by a system that ensure road safety such as insurance companies as well as the DMV itself who might reduce the tax or charges associated with transportation based on the ability of the company to comply with regulations. (emphasis added)

Applicant submits that nowhere in the initial office action does the examiner suggest proper use of the system as motivation for combining the art cited. Applicant submits that there was no mention of "ensuring road safety" or "compliance with regulations" as motivation for combining the art cited in the initial (non-final) office action. Further, Applicant submits that these new arguments for motivation are not related to the arguments of "enhancing customer loyalty" or "driving increased sales" provided in the initial (non-final) office action. Thus, the applicant submits that as applicant's amended claim 1 combined the limitations of former claims 1, 2, and 12 and amended claim 17 combined the limitations of former claims 17, 18, and 25, additional grounds in support of a motivation for combination were not necessitated by the applicant's amendment. Applicant submits that these new justifications for the examiners position go beyond rebutting the applicant's arguments, and constitute new grounds of rejection.

The MPEP clearly states that the second or any subsequent action on the merits shall be made final except where the examiner introduces a new ground of rejection that is not necessitated by applicant's amendment. A review of the record further reveals that the examiner issued a new ground of rejection in the Final Office Action dated April 15, 2008. This new ground of rejection was necessitated by applicant's amendment as to claim 1, 3, 17 and 19. The rejection was changed from a rejection based upon 35 U.S.C 102 in the Non-final Office Action mailed October 10, 2007 to a rejection based upon 35 U.S.C. 103 in the Final Office Action mailed April 15, 2008. A review of applicant's amendment filed January 9, 2008 shows that significant amendments were made to all the independent claims (claim 1 combined the limitations of former claims 1, 2, and 12 and amended claim 17 combined the limitations of former claims 17, 18, and 25). Thus, these amendments necessitated the change of the previous rejection as to claim 1-2 and 17-19 for a rejection based upon 35 USC 102 to a rejection based on 35 USC 103. In the Final Office Action mailed April 15, 2008, the Examiner rejected all claims (1, 3-11, 13-17, 19-24, and 26-29) under 35 USC 103(a) as being unpatentable over Bacque in view of McCall. Thus, the statutory basis as to claims 1, 3, 17, and 19 was changed and the new grounds of rejection was, in fact, necessitated by applicant's amendment. As for the remaining claims, the statutory basis remained the same and the evidence relied upon in support of the rejection remains the same.

Best Available Copy

MPEP 1207.03(III) sets forth that where the statutory basis for the rejection remains the same, and the evidence relied upon in support of the rejection remains the same, a change in the discussion of, or rationale in support of, the rejection does not necessarily constitute a new ground of rejection. Thus, any change set forth by the Examiner as to the discussion or rational in support for the motivation to combine does not constitute a new ground of rejection.

For the foregoing reasons, the finality of the first office action is proper and no abuse of discretion, nor any arbitrary or capricious action is evidenced, and accordingly the petition to withdraw the finality of the final office action mailed April 15, 2008 is **DISMISSED**.

Any questions regarding this decision should be directed to SPE Janice Mooneyham at (571) 272-6805.

Wynn Coggins
Patent Technology Center 3600
(571) 272-5350

Jm/sm: 11/14/08

SM

UNITED STATES PATENT AND TRADEMARK OFFICE

Commissioner for Patents
United States Patent and Trademark Office
P.O. Box 1450
Alexandria, VA 22313-1450
www.uspto.gov

JUN 21 2005

FOLEY AND LARDNER
SUITE 500
3000 K STREET NW
WASHINGTON DC 20007

In re Application of	:
Douglas Hovey et al	: PETITION TO MAKE SPECIAL
Serial No.: 10/412,669	:
Filed: April 14, 2003	:
Attorney Docket No.: 029318-0930	

This is in response to the petition filed June 3, 2005, to make the above-identified application special under the provisions of 37 CFR 1.102(d).

Applicant has satisfied the provisions set forth in M.P.E.P. 708.02, X. Therefor the petition is **GRANTED**.

The application will be forwarded to the examiner for action on the merits commensurate with this decision.

Should there be any questions with regard to this letter please contact William R. Dixon, Jr. by letter addressed to the Director, Technology Center 1600, P.O. Box 1450, Alexandria, VA 22313-1450, or by telephone at 571-272-0519 or by facsimile transmission to the Office general facsimile number, 571-273-8300.

William R. Dixon, Jr.
Special Program Examiner
Technology Center 1600

UNITED STATES PATENT AND TRADEMARK OFFICE

Commissioner for Patents
United States Patent and Trademark Office
P.O. Box 1450
Alexandria, VA 22313-1450
www.uspto.gov

Foley and Lardner, LLP
Suite 500
3000 K Street, NW
Washington, DC 20007

COPY MAILED

JUN 0 5 2007

OFFICE OF PETITIONS

In re Application of	:	
Egisto Boschetti et al.	:	
Application No. 10/412,679	:	DECISION ON PETITION
Filed: April 14, 2003	:	TO WITHDRAW
Attorney Docket No. 083833-0104	:	FROM RECORD
	:	

This is a decision on the Request to Withdraw as attorney or agent of record under 37 C.F.R. § 1.36(b), filed March 30, 2007.

The request is **NOT APPROVED** as moot.

A review of the file record indicates that the power of attorney to Steven A. Bent and all attorneys/agents associated with customer number 54077 of record has been revoked by the applicant of the patent application on April 23, 2007. Accordingly, the request to withdraw under 37 C.F.R. § 1.36(b) is moot.

There is no outstanding office action at this time.

All future communications from the Office will continue to be directed to the below-listed address until otherwise notified by applicant.

Telephone inquires concerning this decision should be directed to Kimberly Inabinet at 571-272- 4618.

Frances Hicks
Petitions Examiner
Office of Petitions

cc: Morgan, Lewis & Bockius, LLP
2 Palo Alto Square
3000 El Camino Real, Suite 700
Palo Alto, CA 94306

UNITED STATES PATENT AND TRADEMARK OFFICE

COMMISSIONER FOR PATENTS
UNITED STATES PATENT AND TRADEMARK OFFICE
P.O. BOX 1450
ALEXANDRIA, VA 22313-1450
www.uspto.gov

WILEY, REIN & FIELDING, LLP
ATTN: PATENT ADMINISTRATION
1776 K. STREET N.W.
WASHINGTON DC 20006

COPY MAILED

JUN 14 2005

OFFICE OF PETITIONS

Applicant: Tocque
Appl. No.: 10/412,684
Filing Date: April 14, 2003
Title: COMBINED THERAPEUTICAL TREATMENT OF HYPERPROLIFERATIVE DISEASES
Attorney Docket No.: ST59003-C
Pub. No.: US 2004/0127437 A1
Pub. Date: July 1, 2004

This is a decision on the request for a corrected patent application publication under 37 CFR 1.221(b), filed on August 31, 2004 for the above-identified application.

The request is granted.

The corrected patent application publication will be published in due course, unless the patent issues before the application republishes.

On April 14, 2003, the above identified application was filed without a benefit claim to one of the earlier filed U.S. applications or a priority claim to the earlier filed foreign application. 37 CFR 1.78 in summary requires that a benefit claim to an earlier filed application must be contained in the first sentence of the application or be submitted in an amendment or application data sheet within the required time frame within the later of four months from the actual filing date or the date on which the national stage commenced, or sixteen months from the filing date of the prior-filed application.[1]

The request for a corrected filing receipt and the submission of an application data on March 15, 2004, sheet is improper, as a registered practitioner did not sign the paper in compliance with 37 CFR 1.31-1.34 and 37 CFR 10.10. Applicant is reminded that only registered practitioners may practice before the USPTO. Even if the request for a corrected filing receipt and application data

[1]See Claiming the Benefit of a Prior-Filed Application under 35 U.S.C. §§ 119(e), 120, 121, and 365(c), 1268 Off. Gaz. Pat. Office Notices 89 (March 18, 2003).

sheet (ADS) making the priority and benefit claims filed on March 15, 2004, was properly signed, they were not timely filed. Since, a proper benefit claim and a proper priority claim in accordance with 37 CFR 1.55 and 1.78 were not made within the required time period, the information has been removed from the pre-exam system.

In order to make a late benefit claim to the earlier filed applications, applicant must submit a petition to accept an unintentionally delayed claim under 35 U.S.C. 119 and 120 for the benefit of the earlier filed applications. The petition must include 1) the surcharge ($1370) set forth in 37 CFR 1.14(t) and 2) a statement that the entire delay between the date the claim was due under paragraph (a)(5) of this section and the date the claim was filed was unintentional. The petition must also include a proper reference (amendment) to the prior applications in order for the petition to be granted.

The Office's electronic systems have been corrected to show that a power of attorney has not been given to customer number 29693.

Inquiries relating to this matter may be directed to Mark Polutta at (571) 272-7709.

Mark O. Polutta
Office of Patent Legal Administration
Office of the Deputy Commissioner
for Patent Examination Policy

Enclosure: Corrected Filing Receipt

UNITED STATES PATENT AND TRADEMARK OFFICE

Commissioner for Patents
United States Patent and Trademark Office
P.O. Box 1450
Alexandria, VA 22313-1450
www.uspto.gov

WILEY REIN & FIELDING LLP
ATTN: PATENT ADMINISTRATION
1776 K STREET NW
WASHINGTON, DC 20006

COPY MAILED

JUL 13 2005

OFFICE OF PETITIONS

In re Application of	:
Bruno Tocque	:
Application No. 10/412,684	: DECISION ON PETITION
Filed: April 14, 2003	: UNDER 37 CFR 1.78(a)(3)
Attorney Docket No. ST95003-C	:

This is a decision on the petition under 37 CFR 1.78(a)(3), filed July 1, 2005, to accept an unintentionally delayed claim under 35 U.S.C. § 120 for the benefit of priority to a prior-filed nonprovisional application (Application No. 08/875,222, filed July 17, 1997, which is the national stage entry of PCT/FR96/00056).[1]

The petition is **GRANTED**.

A petition for acceptance of a claim for late priority under 37 CFR 1.78(a)(3) is only applicable to those applications filed on or after November 29, 2000. Further, the petition is appropriate only after the expiration of the period specified in 37 CFR 1.78(a)(2)(ii). In addition, the petition under 37 CFR 1.78(a)(3) must be accompanied by:

(1) the reference required by 35 U.S.C. § 120 and 37 CFR 1.78(a)(2)(i) of the prior-filed application, unless previously submitted;

(2) the surcharge set forth in § 1.17(t); and

(3) a statement that the entire delay between the date the claim was due under 37 CFR 1.78(a)(2)(ii) and the date the claim was filed was unintentional. The Commissioner may require additional information where there is a question whether the delay was unintentional.

---

[1] On filing, a priority claim was made and recognized by the Office to Application No. 09/816,144, as well as to foreign Application No. FR95/00436 (which appears in the oath/declaration), as noted on the Filing Receipt mailed July 22, 2003. Therefore, the petition is being treated solely under the provisions of 37 CFR 1.78(a)(3).

The instant nonprovisional application was filed after November 29, 2000, and the claim herein for the benefit of priority to the prior-filed nonprovisional application is submitted after expiration of the period specified in 37 CFR 1.78(a)(2)(ii). Therefore, this is a proper petition under 37 CFR 1.78(a)(3).

37 CFR § 1.78(a)(3) requires a statement that the entire delay between the date the claim was due under 37 CFR § 1.78(a)(2)(ii) and the date the claim was filed was unintentional. Since the statement contained in the instant petition varies from the language required by 37 CFR 1.78(a)(3), the statement contained in the instant petition is being construed as the statement required by 37 CFR 1.78(a)(3).

The petition complies with the requirements for a grantable petition under 37 CFR 1.78(a)(3) in that (1) a reference to the above-noted, prior-filed nonprovisional application has been included in an Application Data Sheet (ADS),[2] as provided by 37 CFR 1.78(a)(2)(iii); (2) the $,1370 surcharge fee required by 37 CFR 1.17(t) has been submitted; and (3) the petition contains an adequate statement of unintentional delay. Accordingly, having found that the instant petition for acceptance of an unintentionally delayed claim for the benefit of priority under 35 U.S.C. § 120 to the above-noted, prior-filed nonprovisional application satisfies the conditions of 37 CFR 1.78(a)(3), the petition is granted.

The granting of the petition to accept the delayed benefit claim to the prior-filed application under 37 CFR 1.78(a)(3) should not be construed as meaning that the instant application is entitled to the benefit of the prior-filed application. In order for the instant application to be entitled to the benefit of the prior-filed application, all other requirements under 35 U.S.C. § 120 and 37 CFR 1.78(a)(1) and (a)(2) must be met. Similarly, the fact that the corrected Filing Receipt accompanying this decision on petition includes the prior-filed application should not be construed as meaning that applicant is entitled to the claim for benefit of priority to the prior-filed application noted thereon. Accordingly, the examiner will, in due course, consider this benefit claim and determine whether the instant application is entitled to the benefit of the earlier filing date.

A corrected Filing Receipt, which includes the priority claim to the prior-filed nonprovisional application, accompanies this decision on petition.

Any inquiries concerning this decision may be directed to the undersigned at (571) 272-3218. All other inquiries concerning either the examination procedures or status of the application should be directed to the Technology Center.

---

[2] It is noted that the ADS lists both the domestic and foreign priority claims under a single heading. The domestic and foreign priority claims should be listed separately under their respective headings; i.e., Domestic Priority and Foreign Priority. Petitioner should submit a supplemental ADS in order to avoid any error in printing of the patent, should the application be found to contain allowable subject matter.

This application is being forwarded to Technology Center Art Unit 1633 for examination in due course.

Frances Hicks

Frances Hicks
Petitions Examiner
Office of Petitions

ATTACHMENT: Corrected Filing Receipt

RICK D. NYDEGGER
BRENT P. LORIMER
THOMAS R. VUKSINICK
LARRY R. LAYCOCK
JONATHAN W. RICHARDS
DAVID R. WRIGHT
JOHN C. STRINGHAM
JOHN M. GUYNN
CHARLES L. ROBERTS
DANA L. TANGREN
ERIC L. MASCHOFF
CHARLES J. VEVERKA
ROBYN L. PHILLIPS
RICHARD C. GILMORE *
STERLING A. BRENNAN
R. BURNS ISRAELSEN
DAVID R. TODD
DAVID B. DELLENBACH
L. DAVID GRIFFIN
ADRIAN J. LEE
FRASER D. ROY
CARL T. REED
R. PARRISH FREEMAN, JR.
PETER F. MALEN, JR.
L. REX SEARS, PH.D.

ROBERT E. AYCOCK
JENS C. JENKINS
MICHAEL B. DODD
BRETT I. JOHNSON
SARA D. JONES
TIGE KELLER
JANNA J. LEWIS
J. LAVAR OLDHAM
MICHAEL J. FRODSHAM
WESLEY C. ROSANDER
RYAN N. FARR
WILLIAM R. RICHTER
KEVIN W. STINGER
MATTHEW D. TODD
MATTHEW A. BARLOW
ANDREW S. HANSEN
CHAD E. NYDEGGER
JOSEPH G. PIA
CLINTON E. DUKE
JAMES B. BELSHE
KIRK R. HARRIS
MICHAEL M. BALLARD
DAVID A. JONES
SHANE K. JENSEN
JONATHAN M. BENNS, PH.D.
SCOTT A. WOODBURY
JOHN T. GADD
MARK W. FORD
COLBY C. NUTTALL
AARON M. SMITH
KULANIAKEA FISHER
THOMAS M. BONACCI
PAUL G. JOHNSON
AMBER B. LEAVITT
JEFFERY M. LILLYWHITE
HEATHER MANWARING
JOHN C. BACOCH

VERNON R. RICE §
OF COUNSEL

WORKMAN | NYDEGGER

INTELLECTUAL PROPERTY ATTORNEYS

1000 EAGLE GATE TOWER
60 EAST SOUTH TEMPLE
SALT LAKE CITY, UTAH 84111
TELEPHONE: (801) 533-9800
FAX: (801) 328-1707
WEBSITE: HTTP://WWW.WNLAW.COM

OIPE IAP76
OCT 01 2007
PATENT & TRADEMARK OFFICE

PATENT
Docket No. 14458.56

IN THE UNITED STATES PATENT AND TRADEMARK OFFICE

In re application of

	Issacson et al.	
Serial No.:	10/412,698	
Filed:	Apr. 4, 2003	Art Unit 3739
For:	METHODS, SYSTEMS, AND DEVICES FOR PERFORMING ELECTROSURGICAL PROCEDURES	
Examiner:	Rosiland Rollins	
Patent No.:	7,128,741 B1	
Issue Date:	Oct. 31, 2006	

Certificate
OCT 04 2007
of Correction

REQUEST FOR A CERTIFICATE OF CORRECTION
UNDER 37 C.F.R. § 1.323

Attn: Certificate of Correction Branch
Commissioner for Patents
P.O. Box 1450
Alexandria, VA 22313–1450

Sir:

In accordance with the provisions of 37 C.F.R. § 1.323 which implement 35 U.S.C. § 255, the Commissioner is respectfully requested to issue a Certificate of Correction to correct mistakes in the above-identified patent. The enclosed Patent Office Form 1050 reflects the desired corrections. Also enclosed please find a check in the amount of $100.00 to cover the costs for issuance of this certificate.

10/02/2007 CCHAU1 00000046 7128741
01 FC:1811 100.00 OP

4 2007

* Admitted only in California
§ Admitted only in Virginia

The Commissioner is hereby authorized to charge payment of any fees associated with this communication or credit any overpayment to Deposit Account No. 23–3178. Duplicate copies of this letter are enclosed.

Dated this 4 day of September, 2007.

Respectfully submitted,

Fraser D. Roy
Attorney for Patentee
Registration No. 45,666
Customer No. 022913

FDR:slw
Docket No. 14458.56
PR0000002345V001

CERTIFICATE OF DEPOSIT UNDER 37 C.F.R. § 1.8

I hereby certify that this correspondence is being deposited with the United States Postal Service as first class mail, postage prepaid, in an envelope addressed to: Commissioner for Patents, P.O. Box 1450, Alexandria, VA 22313–1450, on this 28th day of September, 2007.

Transmitted: REQUEST FOR A CERTIFICATE OF CORRECTION UNDER 37 C.F.R. § 1.323, PTO Form 1050 and Check No. 154220 for $100.00

4 2007

RICK D. NYDEGGER
BRENT P. LORIMER
THOMAS R. VUKSINICK
LARRY R. LAYCOCK
JONATHAN W. RICHARDS
DAVID R. WRIGHT
JOHN C. STRINGHAM
JOHN M. GUYNN
CHARLES L. ROBERTS
DANA L. TANGREN
ERIC L. MASCHOFF
CHARLES J. VEVERKA
ROBYN L. PHILLIPS
RICHARD C. GILMORE *
STERLING A. BRENNAN
R. BURNS ISRAELSEN
DAVID R. TODD
DAVID B. DELLENBACH
L. DAVID GRIFFIN
ADRIAN J. LEE
FRASER D. ROY
CARL T. REED
R. PARRISH FREEMAN, JR.
PETER F. MALEN, JR.
L. REX SEARS, PH.D.

ROBERT E. AYCOCK
JENS C. JENKINS
MICHAEL B. DODD
BRETT I. JOHNSON
SARA D. JONES
TIGE KELLER
JANNA J. LEWIS
J. LAVAR OLDHAM
MICHAEL J. FRODSHAM
WESLEY C. ROSANDER
RYAN N. FARR
WILLIAM R. RICHTER
KEVIN W. STINGER
MATTHEW D. TODD
MATTHEW A. BARLOW
ANDREW S. HANSEN
CHAD E. NYDEGGER
JOSEPH G. PIA
CLINTON E. DUKE
JAMES B. BELSHE
KIRK R. HARRIS
MICHAEL M. BALLARD
DAVID A. JONES
SHANE K. JENSEN
JONATHAN M. BENNS, PH.D.
SCOTT A. WOODBURY
JOHN T. GADD
MARK W. FORD
COLBY C. NUTTALL
AARON M. SMITH
KULANIAKEA FISHER
THOMAS M. BONACCI
PAUL G. JOHNSON
AMBER B. LEAVITT
JEFFERY M. LILLYWHITE
HEATHER MANWARING
JOHN C. BACOCH

VERNON R. RICE §
OF COUNSEL

WORKMAN | NYDEGGER

INTELLECTUAL PROPERTY ATTORNEYS

1000 EAGLE GATE TOWER
60 EAST SOUTH TEMPLE
SALT LAKE CITY, UTAH 84111
TELEPHONE: (801) 533-9800
FAX: (801) 328-1707
WEBSITE: HTTP://WWW.WNLAW.COM

OIPE IAP76
OCT 01 2007
PATENT & TRADEMARK OFFICE

PATENT
Docket No. 14458.56

IN THE UNITED STATES PATENT AND TRADEMARK OFFICE

In re application of

	Issacson et al.
Serial No.:	10/412,698
Filed:	Apr. 4, 2003
For:	METHODS, SYSTEMS, AND DEVICES FOR PERFORMING ELECTROSURGICAL PROCEDURES
Examiner:	Rosiland Rollins
Patent No.:	7,128,741 B1
Issue Date:	Oct. 31, 2006

Art Unit
3739

REQUEST FOR A CERTIFICATE OF CORRECTION UNDER 37 C.F.R. § 1.323

Attn: Certificate of Correction Branch
Commissioner for Patents
P.O. Box 1450
Alexandria, VA 22313–1450

Sir:

In accordance with the provisions of 37 C.F.R. § 1.323 which implement 35 U.S.C. § 255, the Commissioner is respectfully requested to issue a Certificate of Correction to correct mistakes in the above-identified patent. The enclosed Patent Office Form 1050 reflects the desired corrections. Also enclosed please find a check in the amount of $100.00 to cover the costs for issuance of this certificate.

4 2007

* Admitted only in California
§ Admitted only in Virginia

The Commissioner is hereby authorized to charge payment of any fees associated with this communication or credit any overpayment to Deposit Account No. 23–3178. Duplicate copies of this letter are enclosed.

Dated this 4 day of September, 2007.

Respectfully submitted,

Fraser D. Roy
Attorney for Patentee
Registration No. 45,666
Customer No. 022913

FDR:slw
Docket No. 14458.56
PR0000002345V001

CERTIFICATE OF DEPOSIT UNDER 37 C.F.R. § 1.8

I hereby certify that this correspondence is being deposited with the United States Postal Service as first class mail, postage prepaid, in an envelope addressed to: Commissioner for Patents, P.O. Box 1450, Alexandria, VA 22313–1450, on this 28th day of September, 2007.

Transmitted: REQUEST FOR A CERTIFICATE OF CORRECTION UNDER 37 C.F.R. § 1.323, PTO Form 1050 and Check No. 154220 for $100.00

OCT 4 2007

(Also Form PTO-1050)

UNITED STATES PATENT AND TRADEMARK OFFICE

CERTIFICATE OF CORRECTION

PATENT NO. : **7,128,741 B1**

DATED : **Oct. 31, 2006**

INVENTOR(S) : **Issacson et al.**

It is certified that an error appears or errors appear in the above-identified patent and that said Letters Patent is hereby corrected as shown below:

Drawings

Sheet 2, replace Figure 2 with the figure depicted herein below, in which the previously unlabeled "side" has been labeled with --40--

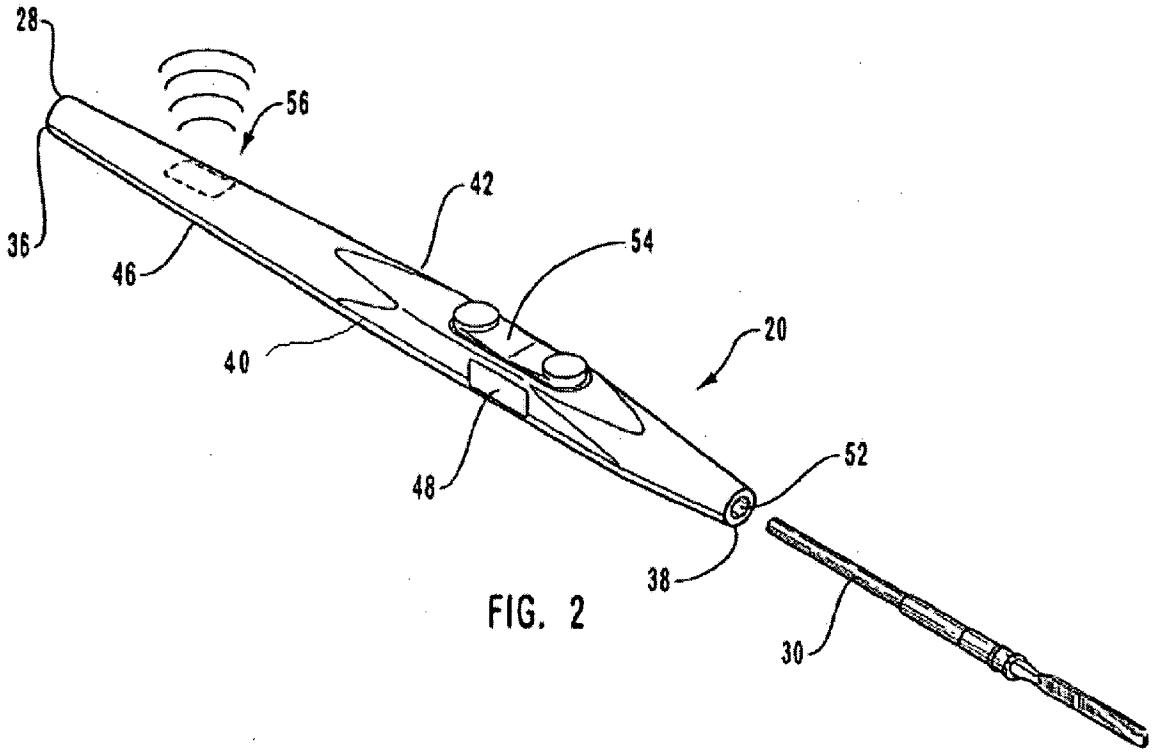

FIG. 2

MAILING ADDRESS OF SENDER (Please do not use customer number

PATENT NO. 7,128,741 B1

Fraser D. Roy, Esq.
WORKMAN NYDEGGER
1000 Eagle Gate Tower
60 East South Temple
Salt Lake City, Utah 84111

No. of additional copies

OCT 4 2007

P15/REV03

(Also Form PTO-1050)

UNITED STATES PATENT AND TRADEMARK OFFICE

CERTIFICATE OF CORRECTION

PATENT NO. : **7,128,741 B1**

DATED : **Oct. 31, 2006**

INVENTOR(S) : **Issacson et al.**

It is certified that an error appears or errors appear in the above-identified patent and that said Letters Patent is hereby corrected as shown below:

Column 7
Line 37, change "22" to --24--

Column 8
Line 31, change "18" to --22--
Line 63, change "18" to --16--
Line 67, after "electrode" change "18" to --16--

Column 9
Line 14, change "22" to --26--
Line 16, change "22" to --26--

Column 11
Line 61, change "43" to --3--

Column 12
Line 27, change "83" to --73--
Line 29, change "83" to --73--

Column 14
Line 14, change "76" to --6--

Column 15
Line 53, change "98" to --8--

Column 19
Line 18, change "(radians/scc)" to --(radians/sec)--
Line 39, change "one" to --on--

Column 20
Line 48, change "(radians/scc)" to --(radians/sec)--

MAILING ADDRESS OF SENDER (Please do not use customer number

PATENT NO. 7,128,741 B1

Fraser D. Roy, Esq.
WORKMAN NYDEGGER
1000 Eagle Gate Tower
60 East South Temple
Salt Lake City, Utah 84111

No. of additional copies

OCT 4 2007

(Also Form PTO-1050)

UNITED STATES PATENT AND TRADEMARK OFFICE

CERTIFICATE OF CORRECTION

PATENT NO. : **7,128,741 B1**

DATED : **Oct. 31, 2006**

INVENTOR(S) : **Issacson et al.**

It is certified that an error appears or errors appear in the above-identified patent and that said Letters Patent is hereby corrected as shown below:

Drawings

Sheet 2, replace Figure 2 with the figure depicted herein below, in which the previously unlabeled "side" has been labeled with --40--

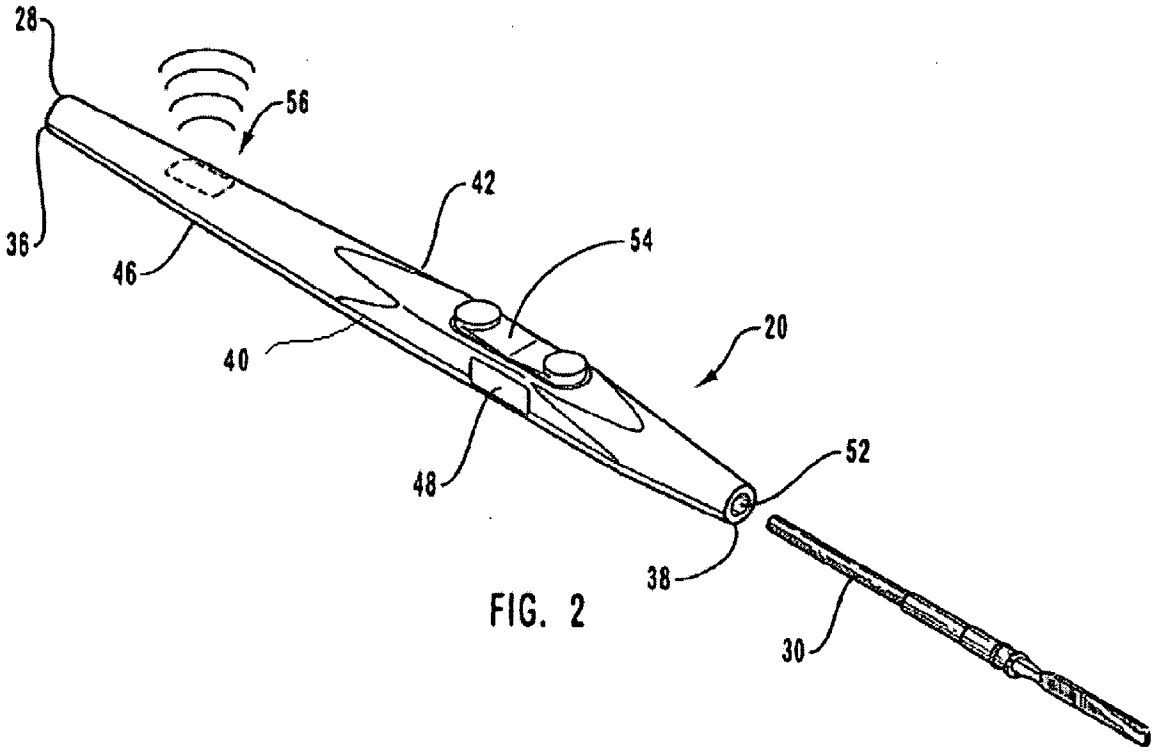

FIG. 2

MAILING ADDRESS OF SENDER (Please do not use customer number

PATENT NO. 7,128,741 B1

Fraser D. Roy, Esq.
WORKMAN NYDEGGER
1000 Eagle Gate Tower
60 East South Temple
Salt Lake City, Utah 84111

No. of additional copies

OCT 4 2007

P15/REV03

(Also Form PTO-1050)

UNITED STATES PATENT AND TRADEMARK OFFICE

CERTIFICATE OF CORRECTION

PATENT NO. : **7,128,741 B1**

DATED : **Oct. 31, 2006**

INVENTOR(S) : **Issacson et al.**

It is certified that an error appears or errors appear in the above-identified patent and that said Letters Patent is hereby corrected as shown below:

Column 7
Line 37, change "22" to --24--

Column 8
Line 31, change "18" to --22--
Line 63, change "18" to --16--
Line 67, after "electrode" change "18" to --16--

Column 9
Line 14, change "22" to --26--
Line 16, change "22" to --26--

Column 11
Line 61, change "43" to --3--

Column 12
Line 27, change "83" to --73--
Line 29, change "83" to --73--

Column 14
Line 14, change "76" to --6--

Column 15
Line 53, change "98" to --8--

Column 19
Line 18, change "(radians/scc)" to --(radians/sec)--
Line 39, change "onc" to --on--

Column 20
Line 48, change "(radians/scc)" to --(radians/sec)--

MAILING ADDRESS OF SENDER (Please do not use customer number

PATENT NO. **7,128,741 B1**

Fraser D. Roy, Esq.
WORKMAN NYDEGGER
1000 Eagle Gate Tower
60 East South Temple
Salt Lake City, Utah 84111

No. of additional copies

→

OCT 4 2007

SPE RESPONSE FOR CERTIFICATE OF CORRECTION

Paper No.: _____

DATE : 8-12-08

TO SPE OF : ART UNIT 3739

SUBJECT : Request for Certificate of Correction for Appl. No.: 10/412698 Patent No.: 7128744

Please respond to this request for a certificate of correction within 7 days.

FOR IFW FILES:

Please review the requested changes/corrections as shown in the **COCIN** document(s) in the IFW application image. No new matter should be introduced, nor should the scope or meaning of the claims be changed.

Check Drawings

Please complete the response (see below) and forward the completed response to scanning using document code **COCX**.

FOR PAPER FILES:

Please review the requested changes/corrections as shown in the attached certificate of correction. Please complete this form (see below) and forward it with the file to:

Certificates of Correction Branch (CofC)
South Tower - 9A22
Palm Location 7580

E. Yang

Certificates of Correction Branch
703-308-9390 ext. 117

Thank You For Your Assistance

The request for issuing the above-identified correction(s) is hereby:
Note your decision on the appropriate box.

- ☒ **Approved** — **All** changes apply.
- ☐ **Approved in Part** — Specify below which changes **do not** apply.
- ☐ **Denied** — State the reasons for denial below.

Comments: All changes are approved for entry.

/Linda C.M. Dvorak/ — **SPE**

3739 — **Art Unit**