UNITED STATES PATENT AND TRADEMARK OFFICE

Commissioner for Patents
United States Patent and Trademark Office
P.O. Box 1450
Alexandria, VA 22313-1450
www.uspto.gov

MENDEL 2 C/O MOFO SF
425 MARKET STREET
SAN FRANCISCO CA 94066

COPY MAILED

DEC 0 4 2006

OFFICE OF PETITIONS

In re Application of
James Zhang et al.
Application No. 10/412,699
Filed: April 10, 2003
Attorney Docket No. 514442003720

: DECISION ON PETITIONS
: UNDER 37 CFR 1.78(a)(3)
: AND 37 CFR 1.78(a)(6)
:

This is a decision on the petitions under 37 CFR §§ 1.78(a)(3) and 1.78(a)(6), filed May 1, 2006, to accept an unintentionally delayed claim under 35 U.S.C. §§120 and 119(e) for the benefit of the prior-filed applications set forth in the concurrently filed amendment and Application Data Sheet (ADS).

The petitions are **GRANTED**.

A petition for acceptance of a claim for late priority under 37 CFR §§ 1.78(a)(3) and 1.78(a)(6) is only applicable to those applications filed on or after November 29, 2000. Further, the petition is appropriate only after the expiration of the period specified in 37 CFR §§ 1.78(a)(2)(ii) and 1.78(a)(5)(ii). In addition, the petition under 37 CFR §§ 1.78(a)(3) and 1.78(a)(6) must be accompanied by:

(1) the reference required by 35 U.S.C. §§ 120 and 119(e) and 37 CFR §§ 1.78(a)(2)(i) and 1.78(a)(5)(i) of the prior-filed application, unless previously submitted;
(2) the surcharge set forth in § 1.17(t); and
(3) a statement that the entire delay between the date the claim was due under 37 CFR §§ 1.78(a)(2)(ii) and 1.78(a)(5)(ii) and the date the claim was filed was unintentional. The Director may require additional information where there is a question whether the delay was unintentional.

Additionally, the instant nonprovisional application must be pending at the time of filing of th reference to the prior-filed provisional application(s) as required by 37 CFR 1.78(a)(5)(ii). Further, the nonprovisional application(s) claiming the benefit of the prior-filed provisional application(s) must have been filed within twelve months of the filing date of the prior-filed provisional application(s).

All of the above requirements having been satisfied, the late claim for priority under 35 U.S.C. § 119(e) is accepted as being unintentionally delayed.

The granting of the petition to accept the delayed benefit claim to the prior-filed applications under 37 CFR § 1.78(a)(3) and* 37 CFR 1.78(a)(6) *should not be construed as meaning that the instant application is entitled to the benefit of the filing date of the prior-filed applications. In order for the instant application to be entitled to the benefit of the prior-filed applications, all other requirements under 35 U.S.C. §120 and 1.78(a)(1) and (a)(2) and under 35 U.S.C. §119(e) and 37 CFR 1.78(a)(4) and (a)(5) must be met. Similarly, the fact that the corrected Filing Receipt accompanying this decision on petition includes the prior-filed applications should not be construed as meaning that applicant is entitled to the claim for benefit of priority to the prior-filed applications noted thereon. Accordingly, the examiner will, in due course, consider this benefit claim and determine whether the instant application is entitled to the benefit of the earlier filing date.

A corrected Filing Receipt, which includes the priority claim to the prior-filed provisional application, accompanies this decision on petition.

Any inquiries concerning this decision may be directed to Senior Petitions Attorney Patricia Faison-Ball at (571) 272-3212. All other inquiries concerning either the examination procedures or status of the application should be directed to the Technology Center.

This matter is being referred to Technology Center AU 1638 for appropriate action on the amendment submitted May 1, 2006, including consideration by the examiner of the claim under 35 U.S.C. §119(e) for the benefit of priority to prior-filed provisional Application.

Frances Hicks
Petitions Examiner
Office of Petitions

ATTACHMENT: Corrected Filing Receipt

UNITED STATES PATENT AND TRADEMARK OFFICE

COMMISSIONER FOR PATENTS
UNITED STATES PATENT AND TRADEMARK OFFICE
P.O. BOX 1450
ALEXANDRIA, VA 22313-1450
www.uspto.gov

Paper No. 4

Seed Intellectual Property Group PLLC
701 Fifth Avenue
Suite 6300
Seattle, WA 98104-7092

COPY MAILED

OCT 15 2003

OFFICE OF PETITIONS

In re Application of :
Barbara J. Gour, et al. :
Application No. 10/412,701 : ON PETITION
Filed: April 10, 2003 :
Attorney Docket No. 100086.413C1 :

This is in response to the "Petition Under 37 CFR 1.47(a), filed June 13, 2003.

The petition is **DISMISSED**.

Rule 47 applicant is given TWO (2) MONTHS from the mailing date of this decision to reply, correcting the below-noted deficiencies. Any reply should be entitled "Request for Reconsideration of Petition Under 37 CFR 1.47(a)," and should only address the deficiencies noted below, except that the reply may include an oath or declaration executed by the non-signing inventor. **FAILURE TO RESPOND WILL RESULT IN ABANDONMENT OF THE APPLICATION.** Any extensions of time will be governed by 37 CFR 1.136(a).

A grantable petition under 37 CFR 1.47(a) requires: (1) proof that the non-signing inventor cannot be reached or refuses to sign the oath or declaration after having been presented with the application papers (specification, claims and drawings); (2) an acceptable oath or declaration in compliance with 35 U.S.C. §§ 115 and 116; (3) the petition fee; and (4) a statement of the last known address of the non-signing inventor. Applicant lacks items (1) and (2) set forth above.

Regarding Item 1:
Where inability to find or locate a named inventor(s) is alleged, a statement of facts should be submitted that fully describes the exact facts which are relied on to establish that a *diligent effort* was made to locate the inventor. A person having firsthand knowledge of the facts recited therein must sign the statement(s) of fact, where at all possible. Statements based on hearsay, will not normally be accepted.

The showing fails to demonstrate that a "diligent effort" was made to locate the nonsigning inventor, Dr. Chen. In this regard, does petitioner have access to inventor Chen's employee records? If so, petitioner should indicate what an inspection of the records reveals as to a current address, forwarding address, or an address of the nearest living relative. What does inspection of the phone directories for those address locations reveal? Did any of Chen's co-workers keep in touch Dr. Chen? At the very least, a search should be made of the telephone directories and an Internet search conducted. Copies of the results of the searches must be referred to in any renewed petition. See MPEP 409.03(d). If inventor Chen is located, then a complete copy of the application papers (specification, claims, drawings, oath, etc.) should be mailed to Dr. Chen's address, return receipt requested, along with a cover letter of instructions which includes a deadline or a statement that no response will constitute a refusal. This sort of ultimatum lends support to finding of refusal by conduct. If the papers are returned, and all other attempts to locate or reach the inventor, e.g., through personnel records, co-workers, E-mail, the Internet or the telephone, etc., continue to fail, then applicant will have established that inventor Chen cannot be reached or has refused to join in the application. A person having firsthand knowledge of the facts recited therein must sign the statement of facts, where at all possible.

If inventor Chen is located and the inventor orally refuses to join in the application or where there is an express or oral refusal to execute the declaration, that fact along with the time and place of the refusal must be stated in the affidavit or declaration. If, on the other hand, petitioner receives an express written refusal, a copy of the document evidencing that refusal must be made part of the affidavit or declaration.

When it is concluded by the Rule 47 applicant that an omitted inventor's conduct constitutes a refusal, all facts upon which that conclusion is based should be stated in an affidavit or declaration. If there is documentary evidence to support facts alleged in the affidavit or declaration, such evidence must be submitted.

Whenever an omitted inventor gives reason for refusing to sign the application oath or declaration, that reason should be stated in the affidavit or declaration.

Regarding item 2:
There are two declarations in the application file, one that lists Anmar Ali as the first inventor and a second that lists Barbara Gour as the first inventor. Additionally, the order of inventorship is different in both declarations. In view thereof, a petition under 37 CFR 1.182 with requisite fee should be submitted which indicates the desired order of inventorship.

It is noted that the instant petition appears to be a copies of the petition and declarations filed in a prior application; namely, 09/769,145, which was never processed.

Further correspondence with respect to this matter should be addressed as follows:

By MAIL: Mail Stop PETITION
Commissioner for Patents
Post Office Box 1450
Alexandria, VA 22313-1450

By FAX: (703) 308-6916
Attn: Office of Petitions

By HAND: 2201 South Clark Place
Crystal Plaza 4, Suite 3C23
Arlington, VA 22202

Telephone inquiries should be directed to Marianne Morgan at (703) 306-3475.

Frances M. Hicks
Lead Petitions Examiner
Office of Petitions
Office of the Deputy Commissioner
for Patent Examination Policy

UNITED STATES PATENT AND TRADEMARK OFFICE

COMMISSIONER FOR PATENTS
UNITED STATES PATENT AND TRADEMARK OFFICE
P.O. BOX 1450
ALEXANDRIA, VA 22313-1450
www.uspto.gov

Paper No. 7

Seed Intellectual Property Group PLLC
701 Fifth Avenue
Suite 6300
Seattle, WA 98104-7092

COPY MAILED

NOV 1 9 2003

OFFICE OF PETITIONS

In re Application of	: DECISION NOTING JOINDER OF
Barbara J Gour, et al.	: INVENTOR AND PETITION
Application No. 10/412,701	: UNDER 37 CFR 1.47(a) MOOT
Filed: April 10, 2003	: AND DECISION GRANTING
Attorney Docket No. 100086.413C1	: PETITION UNDER 37 CFR 1.182

Papers filed on November 10, 2003 in response to a "Decision Refusing Status Under 37 CFR 1.47(a)" mailed October 15, 2003 included a Declaration signed by a previously non-signing inventor, Zhigang Chen, in compliance with 37 CFR 1.63.

This is also a decision on the petition under 37 CFR 1.182 to correct the order of the inventors.

The petition under 37 CFR 1.47 is dismissed as moot.

The petition under 37 CFR 1.182 is granted.

In view of the joinder of the inventor, further consideration under § 1.47(a) is not necessary. This application does not have any Rule 1.47 status and no such status should appear on the file wrapper. This application need not be returned to this Office for any further consideration under 37 CFR 1.47(a).

The order of the inventors will be listed as follows:

1. **Barbara J. Gour**
2. **Orest W. Blaschuk**
3. **Anmar Ali**
4. **Feng Ni**
5. **Zhigang Chen**
6. **Stephanie D. Michaud**
7. **Shaomeng Wang**
8. **Zenjian Hu**

The application file is being forwarded to the Office of Initial Patent Examination to complete processing of the application.

Telephone inquiries should be directed to the undersigned at (703) 306-3475.

Marianne E. Morgan

Marianne E. Morgan
Petitions Examiner
Office of Petitions
Office of the Deputy Commissioner
for Patent Examination Policy

UNITED STATES PATENT AND TRADEMARK OFFICE

Commissioner for Patents
United States Patent and Trademark Office
P.O. Box 1450
Alexandria, VA 22313-1450
www.uspto.gov

SEED INTELLECTUAL PROPERTY LAW GROUP PLLC
701 FIFTH AVE
SUITE 5400
SEATTLE, WA 98104

COPY MAILED

JUL 10 2007

OFFICE OF PETITIONS

In re Application of Gour et al. :
Application No. 10/412,701 :
Filing Date: April 9, 2003 :
Attorney Docket No. 100086.413C2 :

Decision on Petition

This is a decision on the petition filed March 21, 2007, under 37 CFR 1.10(c) to accord the above-identified application a filing date of April 9, 2003, instead of April 10, 2003.

The petition is **granted**.

Petitioner has shown the application papers were mailed using Express Mail.

Petitioner has shown the Express Mail mailing label number was placed on the application papers.

A review of the Express Mail mailing label indicates a "date-in" of April 9, 2003.

Petitioner has satisfied the requirements of 37 CFR 1.10(c) and the application will be accorded a filing date of April 9, 2003.

The Office of Initial Patent Examination will be informed of the instant decision and will accord the application a filing date of April 9, 2003. Once the new filing date is accorded, the Office of Initial Patent Examination will inform the Office of Publications of the need to issue the application as a patent in due course.

Telephone inquiries regarding this communication should be directed to Petitions Attorney Steven Brantley at (571) 272-3203.

Charles Steven Brantley
Senior Petitions Attorney
Office of Petitions

UNITED STATES PATENT AND TRADEMARK OFFICE

COMMISSIONER FOR PATENTS
UNITED STATES PATENT AND TRADEMARK OFFICE
P.O. BOX 1450
ALEXANDRIA, VA 22313-1450
www.uspto.gov

COPY MAILED

JUN 07 2005

OFFICE OF PETITIONS

TOWNSEND AND TOWNSEND AND CREW, LLP
TWO EMBARCADERO CENTER
EIGHTH FLOOR
SAN FRANCISCO, CA 94111-3834

In re Application of
Robert T. Elliot
Application No. 10/412,728
Filed: April 10, 2003
Attorney Docket No. 18189K-013600US

ON PETITION

This is a decision on the petition under 37 CFR 1.137(b), filed by October 5, 2004, to revive the above-identified application. This is also a decision on the petition to correct inventorship under 37 CFR 1.48 filed October 5, 2004.

The petition under 37 CFR 1.137(b) is **GRANTED**.

The application became abandoned for failure to timely respond to a Notice to File Missing Parts mailed August 7, 2003. The notice required an oath or declaration under 37 CFR 1.63, the basic filing fee and the requisite surcharge under 37 CFR 1.16(e). On August 30, 2004, a Notice of Abandonment was mailed. In response, on October 5, 2004, the present petition was filed, as well as an executed declaration, the basic filing fee, the requisite surcharge and a petition under 37 CFR §1.48 to correct inventorship.

The petition is found to comply with the requirements of 37 CFR 1.137(b).

The petition under 37 CFR 1.48 is **DISMISSED AS MOOT**.

37 CFR 1.48(f)(1) states "[I}f the correct inventor or inventors are not named on filing a nonprovisional application under §1.53(b) without an executed oath or declaration under §1.63 by any of the inventors, the first submission of an executed oath or declaration under §1.63 by any of the inventors during the pendency of the application will act to correct the earlier identification of inventorship..." In this case, the executed declaration under 37 CFR 1.63 filed October 5, 2004, governs inconsistencies with the application data sheet in the naming of inventors and, therefore, sets forth the inventive entity.

The application is being referred to the Office of Initial Patent Examination (OIPE) for further processing using the declaration filed October 5, 2004.

Telephone inquires related to this decision should be directed to the undersigned at (571) 272-3204. Telephone inquiries related to OIPE processing should be directed to their hotline at (703) 308-1202.

Sherry D. Brinkley
Petitions Examiner
Office of Petitions
Office of the Deputy Commissioner
for Patent Examination Policy

UNITED STATES PATENT AND TRADEMARK OFFICE

COMMISSIONER FOR PATENTS
UNITED STATES PATENT AND TRADEMARK OFFICE
P.O. BOX 1450
ALEXANDRIA, VA 22313-1450
www.uspto.gov

Paper No. 7

KNOBBE MARTENS OLSON & BEAR LLP
2040 MAIN STREET
FOURTEENTH FLOOR
IRVINE, VA 92614

COPY MAILED

APR 2 6 2004

OFFICE OF PETITIONS

In re Application of	:	
Judith Ann Clements	:	
Application No. 10/412,748	:	DECISION ON PETITION
Filed: April 9, 2003	:	UNDER 37 CFR 1.55(c)
Attorney Docket No. DAV1172.003AUS	:	

This is a decision on the petition under 37 CFR 1.55(c), filed August 20, 2003, for acceptance of an unintentionally delayed claim under 35 U.S.C. § 119(a)-(d) and (f) for benefit of the filing date of foreign Australian Provisional Patent Application No. PS1616/02, filed April 9, 2002.

Petitioner states that the claim to priority was previously presented in this application as items <150> and <151> on page 1 of the Sequence Listing submitted with the application upon filing. Petitioner contends that, since MPEP provides that the claim for priority need not be in any special form, the mention of the priority claim in the Sequence Listing is believed to be sufficient to meet the requirement of 37 CR 1.55(1)(i), as it identified the prior foreign application by application number, country, as well as the day, month, and year of its filing. Therefore, no fee is believed to be due.

Petitioner's attention is directed to 37 CFR 1.63(c)(2), which states:

> Unless such information is supplied on an application data sheet in accordance with § 1.76, the oath or declaration must also identify:
>
> *** (2) Any foreign application for patent (or inventor's certificate) for which a claim for priority is made pursuant to § 1.55, and any foreign application having a filing date before that of the application on which priority is claimed, by specifying the application on which priority is claimed, by specifying the application number, country, day, month, and year of its filing.

Petitioner's attention is also directed to MPEP 201.13A. under the heading "The Priority Claim" which reads in part:

> A priority claim need not be in any special form and may be a statement signed by a registered attorney or agent. A priority claim can be made on filing: (A) by including a copy of an unexecuted or executed oath or declaration specifying a foreign priority claim (see 37 CFR 1.63(c)(2); or (B) by submitting an application data sheet specifying a foreign priority claim (see 37 CFR 1.76).

As the Australian foreign priority claim was not provided in the manner set forth in 37 CFR 1.63(c)(2) or in an unexecuted oath or declaration upon filing or within the period specified in 37 CFR 1.55(a)(1)(i), a petition is now the appropriate avenue of relief for acceptance of a late claim for priority. Therefore, the instant communication is more appropriately a petition under 37 CFR 1.55(c) and has been so treated.

A petition under 37 CFR 1.55(c) to accept an unintentionally delayed claim for priority requires:

(1) The nonprovisional application claiming the benefit of an earlier filing date must be filed on or after November 29, 2000;

(2) the claim submitted with the petition must identify the prior foreign application for which priority is claimed, as well as any foreign application for the same subject matter and having a filing date before that of the application for which priority is claimed, by the application number, country, and the filing date;

(3) the surcharge as set forth in 37 CFR 1.17(t);

(4) a statement that the entire delay between the date the claim was due under 37 CFR 1.55(a)(1) and the date the claim was filed was unintentional. (The Commissioner may require additional information where there is a question whether the delay was unintentional.); and

(5) the above-identified nonprovisional application must be filed within 12 months of the filing date of the foreign application.

The instant pending nonprovisional application was filed after November 29, 2000, and did not include a reference to the foreign application, for which benefit is now sought, within the later of four months from the actual filing date of the application or sixteen months from the filing date of the prior foreign application. Therefore, as noted above, since the claim for priority is submitted after the period specified in 37 CFR 1.55(a)(1)(i), this is an appropriate petition under the provisions of 37 CFR 1.55(c).

The above-identified pending nonprovisional application was filed on April 9, 2003, which is after November 29, 2000 and within 12 months of April 9, 2002 (the filing date of the foreign application to which benefit is now being claimed). On October 6, 2003, an executed oath/declaration was received which identifies the foreign application for which priority is claimed by application number, country and filing date. The required petition fee of $1,300 was received with the petition. Lastly, petitioner has provided an adequate statement of unintentional delay.

All requirements being met, the petition under 37 CFR 1.55(c) to accept an unintentionally delayed claim for priority under 35 U.S.C. § 119(a)-(d) and (f) is **granted**.

A corrected filing receipt accompanies this decision on petition.

This application is being forwarded to Technology Center AU the Office of Initial Patent Examination for pre-examination processing. Upon receipt of the application in the Technology Center, the Examiner will make a determination as to whether applicant is entitled to claim foreign priority under 35 U.S.C. § 119(a)-(d) and (f) to the above-noted Australian foreign application.

Any inquiries directly pertaining to this matter may be directed to the undersigned at (703) 305-8680.

Frances Hicks

Frances Hicks
Petitions Examiner
Office of Petitions
Office of the Deputy Commissioner
for Patent Examination Policy

ATTACHMENT: Corrected Filing Receipt

UNITED STATES
PATENT AND
TRADEMARK OFFICE

Commissioner for Patents
Washington, DC 20231
www.uspto.gov

6/30/03

Weingarten Schurgin Gagnebin and Lebovici LLP
Ten Post Office Square
Boston MA 02109

Dear Applicant:

The Box PGPub replacement drawings for application number 10/412,753 received on 5/16/03 by the U. S. Patent and Trademark Office will be included for patent publication.

Telephone inquiries should be directed to Customer Service, Office of Initial Patent Examination, at 703-308-1202.

UNITED STATES
PATENT AND
TRADEMARK OFFICE

Commissioner for Patents
Washington, DC 20231
www.uspto.gov

Signature of Reviewer, Office of Initial Patent Examination

UNITED STATES PATENT AND TRADEMARK OFFICE

Commissioner for Patents
United States Patent and Trademark Office
P.O. Box 1450
Alexandria, VA 22313-1450
www.uspto.gov

HOLLAND & KNIGHT LLP
633 WEST FIFTH STREET, TWENTY-FIRST FLOOR
LOS ANGELES CA 90071-2040

COPY MAILED

JAN 12 2007

OFFICE OF PETITIONS
ON PETITION

In re Application of :
Shyam K. Nadkarni :
Application No. 10/412,777 :
Filed: April 11, 2003 :
Attorney Docket No. 094200.284 :

This is a decision on the petition filed August 11, 2006, to revive the above identified application under 37 CFR 1.137(b)[1].

The petition under 37 CFR 1.137(b) is **GRANTED**.

This application became abandoned on October 18, 2005, for failure to file a timely response to a Restriction Requirement mailed September 14, 2005, which set a one month shortened statutory period for reply. No extensions of the time for reply under 37 CFR 1.136(a) were obtained prior to the expiration of the extendable period. Accordingly, a Notice of Abandonment was mailed March 24, 2006.

The petition fee in the amount of $750.00 has been applied to the finance records for the instant patent application.

The response to the Restriction Requirement filed August 9, 2006 will be referred to Technology Center 1744 for further processing.

Telephone inquiries concerning this matter may be directed to the undersigned Petitions Attorney at (571) 272-3212.

Patricia Faison-Ball

Patricia Faison-Ball
Senior Petitions Attorney
Office of Petitions

---

[1]Effective December 1, 1997, the provisions of 37 CFR 1.137(b) now provide that where the delay in reply was unintentional, a petition may be filed to revive an abandoned application or a lapsed patent pursuant to 37 CFR 1.137(b). A grantable petition filed under the provisions of 37 CFR 1.137(b) must be accompanied by:

(1) the required reply, unless previously filed. In a nonprovisional application abandoned for failure to prosecute, the required reply may be met by the filing of a continuing application. In an application or patent, abandoned or lapsed for failure to pay the issue fee or any portion thereof, the required reply must be the payment of the issue fee or any outstanding balance thereof.

(2) the petition fee as set forth in 37 CFR 1.17(m);

(3) a statement that the entire delay in filing the required reply from the due date for the reply until the filing of a grantable petition pursuant to 37 CFR 1.137(b) was unintentional. The Commissioner may required additional information where there is a question whether the delay was unintentional; and

(4) any terminal disclaimer (and fee as set forth in 37 CFR 1.20(d)) required pursuant to 37 CFR 1.137(c)).

UNITED STATES PATENT AND TRADEMARK OFFICE

Commissioner for Patents
United States Patent and Trademark Office
P.O. Box 1450
Alexandria, VA 22313-1450
www.uspto.gov
DIW May-07

THE PROCTER & GAMBLE COMPANY
INTELLECTUAL PROPERTY DIVISION - WEST BLDG.
WINTON HILL BUSINESS CENTER - BOX 412
6250 CENTER HILL AVENUE
CINCINNATI OH 45224

COPY MAILED

MAY 21 2007

OFFICE OF PETITIONS

In re Application of	:	
Sanjeev Midha	:	DECISION ON PETITION
Application No. 10/412,779	:	
Filed: 04/11/2003	:	
Atty Docket No. 8733MR	:	

This is a decision on the petition filed on 27 March, 2007, which requests under 37 C.F.R. §1.182 that a previously filed terminal disclaimer be withdrawn.

The petition is granted.

Petitioner asserts that the terminal disclaimer filed on 13 November, 2006, should be withdrawn because it contains a typographical error. As the examiner has concurred, the petition can be favorably considered.

The petition fee of $400.00 will be charged to counsel's deposit account, as authorized in the present petition.

Receipt of the terminal disclaimer filed with the present petition is acknowledged.

This application is being referred to Technology Center Art Unit 1615 for correction of PALM and file records consistent with this decision.

Telephone inquiries relative to this decision should be directed to the undersigned at (571) 272-3231.

D Wood

Douglas I. Wood
Senior Petitions Attorney
Office of Petitions

#4

UNITED STATES PATENT AND TRADEMARK OFFICE

MAILED

AUG 2 2 2003

TECHNOLOGY CENTER 2100

COMMISSIONER FOR PATENT
UNITED STATES PATENT AND TRADEMARK OFFIC
WASHINGTON, D.C. 20231
www.uspto.go

Paper No. 4

Richard S. Roberts
Roberts & Mercanti, LLP
P.O. Box 484
Princeton, New Jersey 98542

In re Application of: David Joachim	)	
Application No. 10/412,810	)	**DECISION ON PETITION**
Filed: April 11, 2003	)	**UNDER M.P.E.P. §708.02(II):**
For: CARABINER ELECTRONIC DATA	)	**INFRINGEMENT**
DEVICE	)	

This is a decision on the petition, filed July 22, 2003, under 37 C.F.R. §1.102(d) and M.P.E.P. §708.02(II): Infringement, to make the above-identified application special.

A grantable petition under 37 C.F.R. §1.102(c), and M.P.E.P. §708.02, Section II, must be accompanied by payment of the fee under 37 C.F.R.§1.117(h) and a statement under 37 C.F.R. §1.102 by the applicant or assignee or statements by an attorney/agent registered to practice before the Patent and Trademark Office that (A) there is an infringing device or product actually on the market or method in use; (B) a rigid comparison of the alleged infringing device, product, or method with the claims of the application has been made, and that, in his or her opinion, some of the claims are unquestionably infringed: and (C) he or she has made or caused to be ***made a careful and thorough search of the prior art*** or has a good knowledge of the prior art. A fee under 37 C.F.R. for such a petition is required .

Applicant's submission is deficient because the search is totally inadequate because it was limited to design patents and 2 subclasses within Class 24 "Buckles, Buttons and Clasps". Accordingly, the Petition is **DENIED**.

The application file is being forwarded to Central Files to await examination in its proper turn based on its effective filing date.

Pinchus M. Laufer
Special Programs Examiner
Technology Center 2100
Computer Architecture, Software, and Information Security
(703) 306-4160

#6

UNITED STATES PATENT AND TRADEMARK OFFICE

COMMISSIONER FOR PATENTS
UNITED STATES PATENT AND TRADEMARK OFFICE
P.O. BOX 1450
ALEXANDRIA, VA 22313-1450
www.uspto.gov

RECEIVED

OCT 31 2003

DIRECTOR OFFICE
TECHNOLOGY CENTER 2100

Paper No. 6

Richard S. Roberts
Roberts & Mercanti, LLP
P.O. Box 484
Princeton, New Jersey 98542

In re Application of: David Joachim	)	
Application No. 10/412,810	)	**DECISION ON PETITION**
Filed: April 11, 2003	)	**UNDER M.P.E.P. §708.02(II):**
For: CARABINER ELECTRONIC DATA	)	**INFRINGEMENT**
DEVICE	)	

This is a decision on the request for reconsideration, filed September 2, 2003 of the decision mailed August 22, 2003 denying the grant of special status based on M.P.E.P. §708.02(II): Infringement.

The Petition is **DENIED**.

The original decision found Applicant's submission deficient on the grounds that the search was performed was inadequate because it was limited to design patents and 2 subclasses within Class 24 "Buckles, Buttons and Clasps".

In the request for reconsideration, Petitioner maintains that (1)Applicant must make a statement that he has caused a careful and thorough search to be made and such a statement has been made; and (2) that Applicant's attorney consulted with an Examiner in Art Unit 2913 prior to the search and that a difference of opinion as to relevant search classes between the consulted examiner and the Special Program Examiner does not render the submission inadequate.

BASIS OF OPINION

A grantable petition under 37 C.F.R. §1.102(c), and M.P.E.P. §708.02, Section II, must be accompanied by payment of the fee under 37 C.F.R.§1.117(h) and a statement under 37 C.F.R. §1.102 by the applicant or assignee or statements by an attorney/agent registered to practice before the Patent and Trademark Office that (A) there is an infringing device or product actually on the market or method in use; (B) a rigid comparison of the alleged infringing device, product, or method with the claims of the application has been made, and that, in his or her opinion, some of the claims are unquestionably infringed: and (C) he or she has made or caused to be ***made a careful and thorough search of the prior art*** or has a good knowledge of the prior art. A fee under 37 C.F.R. for such a petition is required .

OPINION

The application under consideration has been filed as an application for a utility patent not as an application for a design patent under 35 U.S.C. § 171. The claims are directed to an electronic device and method of processing data. The claims include specific limitations directed to the physical structure of the device.

The claims and specification recite entering numeric data, processing numeric data in a microprocessor, and displaying the results on a display of the hand held device. Applicant's search was limited design patents and 2 subclasses within Class 24 "Buckles, Buttons and Clasps". No search was carried out in the utility patents related to electronic devices - whether by class and subclass or by text based searching.

Applicant's representative has stated that he has caused a "careful and thorough search" to be made and contends that the statement in itself must be accepted and the petition granted. The undersigned disagrees. The statement is not a mere formality. If the evidence presented as to the nature of the search contradicts the statement of a thorough search, the Office is not required to turn a blind eye to the evidence in the record. Applicant did consult with a design Examiner and received an appropriate search for a design patent on the device as per the expertise of the design examiner which is not being questioned or maligned. The undersigned agrees that this search is relevant and could conceivably uncover relevant art. However, the failure to search the electronic arts means that the search was not "thorough".

Accordingly, the Petition is **DENIED**.

If the petitioner desires further review of the Director's Decision, applicant should consider filing a Petition for Review of the Director's Decision under 37 CFR §1.181(a)(3).

The application file is being forwarded to Central Files to await examination in its proper turn based on its effective filing date.

Stewart J. Levy, Group Director
Technology Center 2100
Computer Architecture, Software, and Information Security

UNITED STATES PATENT AND TRADEMARK OFFICE

Commissioner for Patents
United States Patent and Trademark Office
P.O. Box 1450
Alexandria, VA 22313-1450
www.uspto.gov

Fenwick & West LLP
Silicon Valley Center
801 California Street
Mountain View, CA 94041

COPY MAILED

AUG 16 2007

OFFICE OF PETITIONS

In re Application of	:	
Susan E. Carrie	:	
Application No. 10/412,812	:	DECISION ON PETITION
Filed: April 10, 2003	:	TO WITHDRAW
Attorney Docket No. 23538-07503	:	FROM RECORD
	:	

This is a decision on the Request to Withdraw as attorney or agent of record under 37 C.F.R. § 1.36(b), filed January 10, 2007.

The request is **NOT APPROVED** as moot.

A review of the file record indicates that the power of attorney to Fenwick & West LLP has been revoked by the assignee of the patent application on March 6, 2007. Accordingly, the request to withdraw under 37 C.F.R. § 1.36(b) is moot.

All future communications from the Office will continue to be directed to the below-listed address until otherwise notified by applicant.

Telephone inquires concerning this decision should be directed to Terri Williams at 571-272-2991.

Terri Williams

Terri Williams
Petitions Examiner
Office of Petitions

cc: **Blakely Sokoloff Taylor & Zafman**
12400 Wilshire Boulevard
Seventh Floor
Los Angeles, CA 90025-1030

UNITED STATES PATENT AND TRADEMARK OFFICE

UNITED STATES DEPARTMENT OF COMMERCE
United States Patent and Trademark Office
Address: COMMISSIONER FOR PATENTS
P.O. Box 1450
Alexandria, Virginia 22313-1450
www.uspto.gov

BLAKELY SOKOLOFF TAYLOR & ZAFMAN LLP
1279 OAKMEAD PARKWAY
SUNNYVALE, CA 94085-4040

Mail Date: 07/26/2010

Applicant	: Susan E. Carrie	: DECISION ON REQUEST FOR
Patent Number	: 7660894	: RECALCULATION of PATENT
Issue Date	: 02/09/2010	: TERM ADJUSTMENT IN VIEW
Application No	: 10/412,812	: OF WYETH AND NOTICE OF INTENT TO
Filed	: 04/10/2003	: ISSUE CERTIFICATE OF CORRECTION
		:

The Request for Recalculation is **GRANTED** to the extent indicated.

The patent term adjustment has been determined to be **1484** days. The USPTO will *sua sponte* issue a certificate of correction reflecting the amount of PTA days determined by the recalculation.

Prior to the issuance of the certificate of correction, the USPTO will afford patentee an opportunity to be heard and request reconsideration. Accordingly, patentee has **one month or thirty (30) days**, whichever is longer, to file a request for reconsideration of this patent term adjustment calculation. See 35 U.S.C. 154(b)(3)(B)(ii) and 37 CFR 1.322(a)(4). No extensions of time will be granted under 37 CFR 1.136.

Patentee should use document code PET.OP if electronically filing a request for reconsideration of this patent term adjustment calculation. The patentee must also include the information required by 37 CFR 1.705(b)(2) and the fee required by 37 CFR 1.18(e). If patentee does not file a timely request for reconsideration of this patent term adjustment calculation including the information required by 37 CFR 1.705(b)(2) and the fee required by 37 CFR 1.18(e), the USPTO will issue a certificate of correction reflecting the PTA determination noted above.

Patentee should be aware that in order to preserve the right to review in the United States District Court for the District of Columbia of the USPTO patent term adjustment determination, patentee must ensure that he or she also take the steps required under 35 U.S.C. 154(b)(4)(A) in a timely manner. Nothing in the request for recalculation should be construed as providing an alternative time frame for commencing a civil action under 35 U.S.C. 154(b)(4)(A).

Any questions concerning this decision should be directed to the Office of Patent Legal Administration at 571-272-7702.

OIPE IAP86 DEC 06 2005 PATENT & TRADEMARK OFFICE

A1 1618 HPW

PTO/SB/83 (04-05)
Approved for use through 11/30/2005. OMB 0651-0035
U.S. Patent and Trademark Office, U.S. DEPARTMENT OF COMMERCE
Under the Paperwork Reduction Act of 1995, no persons are required to respond to a collection of information unless it displays a valid OMB control number.

REQUEST FOR WITHDRAWAL AS ATTORNEY OR AGENT AND CHANGE OF CORRESPONDENCE ADDRESS

Application Number	10,412,816
Filing Date	April 11, 2003
First Named Inventor	Metz
Art Unit	1618
Examiner Name	Levest
Attorney Docket Number	00-1326-J

To: Commissioner for Patents
P.O. Box 1450
Alexandria, VA 22313-1450

Please withdraw me as attorney or agent for the above identified patent application, and

- [ ] all the attorneys/agents of record.
- [ ] the attorneys/agents (with registration numbers) listed on the attached paper(s), or
- [X] the attorneys/agents associated with Customer Number 20306

NOTE: This box can only be checked when the power of attorney of record in the application is to all the practitioners associated with a customer number.

The reasons for this request are: The assignee (MIICRO, Inc.) of the application/patent has changed their phone number and has moved. We have not been able to locate or contact them through diligent efforts.

CORRESPONDENCE ADDRESS

1. [X] The correspondence address is NOT affected by this withdrawal.
2. [ ] Change the correspondence address and direct all future correspondence to:

[ ] The address associated with Customer Number:

OR

APPROVED
1/6/06
WILLIAM R. DIXON, JR.
SPECIAL PROGRAM EXAMINER

[ ] Firm or Individual Name					
Address					
City		State		Zip	
Country					
Telephone			Email		
Signature					
Name	Lisa M.W. Hillman, Ph.D		Registration No.	43,673	
Date	12-2-05		Telephone No.	217 359-2998	

NOTE: Withdrawal is effective when approved rather than when received. Unless there are at least 30 days between approval of withdrawal and the expiration date of a time period for response or possible extension period, the request to withdraw is normally disapproved.

This collection of information is required by 37 CFR 1.36. The information is required to obtain or retain a benefit by the public which is to file (and by the USPTO to process) an application. Confidentiality is governed by 35 U.S.C. 122 and 37 CFR 1.11 and 1.14. This collection is estimated to take 12 minutes to complete, including gathering, preparing, and submitting the completed application form to the USPTO. Time will vary depending upon the individual case. Any comments on the amount of time you require to complete this form and/or suggestions for reducing this burden, should be sent to the Chief Information Officer, U.S. Patent and Trademark Office, U.S. Department of Commerce, P.O. Box 1450, Alexandria, VA 22313-1450. DO NOT SEND FEES OR COMPLETED FORMS TO THIS ADDRESS. SEND TO: **Commissioner for Patents, P.O. Box 1450, Alexandria, VA 22313-1450.**

If you need assistance in completing the form, call 1-800-PTO-9199 and select option 2.

UNITED STATES PATENT AND TRADEMARK OFFICE

Commissioner for Patents
United States Patent and Trademark Office
P.O. Box 1450
Alexandria, VA 22313-1450
www.uspto.gov

KNOBLE, YOSHIDA & DUNLEAVY
EIGHT PENN CENTER
SUITE 1350, 1628 JOHN F. KENNEDY BLVD
PHILADELPHIA PA 19103

COPY MAILED

APR 27 2006

OFFICE OF PETITIONS

In re Application of	:	
Frampton E. Ellis III	:	
Application No. 10/412,848	:	ON PETITION
Filed: April 11, 2003	:	
Attorney Docket No. ANAT-3USCON8	:	

This is a decision on the petition under 37 CFR 1.137(b), filed July 28, 2005, to revive the above-identified application.

The petition is **GRANTED**.

37 CFR 1.137(b)(3) requires a statement that the entire delay in filing the required reply from the due date for the reply until the filing of a grantable petition pursuant to 37 CFR 1.137(b) was unintentional. If the statement contained in the instant petition varies from the language required by 37 CFR 1.137(b)(3), the statement contained in the instant petition is being construed as the statement required by 37 CFR 1.137(b)(3) and petitioner must notify the Office if this is **not** a correct interpretation of the statement contained in the instant petition.

The above-identified application became abandoned for failure to submit the issue fee and publication fee in a timely manner in reply to the Notice of Allowance mailed March 17, 2005, which set a statutory period for reply of three (3) months. Accordingly, the above-identified application became abandoned on June 18, 2005.

Telephone inquiries concerning this decision should be directed to the undersigned at (571) 272-3208.

This matter is being referred to Patent Publication.

Karen Creasy

Karen Creasy
Petitions Examiner
Office of Petitions

SCAN! **Please forward case and paper to address shown below.**

SPE RESPONSE FOR CERTIFICATE OF CORRECTION

Paper No.: 20071221

DATE : 11/30/07

TO SPE OF : ART UNIT 2600 Eisenzopf, Reinhard spe

SUBJECT : Request for Certificate of Correction for Appl. No.: 10/412884 Patent No.: 6903903

Please respond to this request for a certificate of correction within 7 days.

Please review the requested changes/corrections as shown in the attached certificate of correction. Please complete this form (see below) and forward it with the file to:

Certificates of Correction Branch (CofC)
South Tower - 9A22
Palm Location 7580

HENRY RANDALL
Certificates of Correction Branch
703-308-9390 ext. _____

Thank You For Your Assistance

The request for issuing the above-identified correction(s) is hereby:
Note your decision on the appropriate box.

- ☒ Approved — All changes apply.
- ☐ Approved in Part — Specify below which changes do not apply.
- ☐ Denied — State the reasons for denial below.

Comments: The drawings are accepted by the examiner

ANDREA WELLINGTON
SUPERVISORY PATENT EXAMINER

SPE

2627
Art Unit

PTOL-306 (REV. 7/03)

U.S. DEPARTMENT OF COMMERCE Patent and Trademark Office

UNITED STATES PATENT AND TRADEMARK OFFICE

Commissioner for Patents
United States Patent and Trademark Office
P.O. Box 1450
Alexandria, VA 22313-1450
www.uspto.gov

LOUIS J WILLE
BRISTOL-MYERS SQUIBB COMPANY
PATENT DEPARTMENT
PO BOX 4000
PRINCETON NJ 08543-4000

COPY MAILED

JAN 02 2008

OFFICE OF PETITIONS

In re Application	:	
Davison, et al.	:	
Application No. 10/412,897	:	DECISION ON PATENT TERM
Filed: April 11, 2003	:	ADJUSTMENT
Attorney Docket No. D0193 NP	:	

This is a decision on the "REQUEST TO CORRECT PATENT TERM ADJUSTMENT PERIOD FOLLOWING RECEIPT OF NOTICE OF ALLOWANCE", filed August 20, 2007, requesting correction of the initial determination of patent term adjustment (PTA) from one hundred sixty-one (161) days to two hundred forty-five (245) days.

The application for patent term adjustment is **GRANTED**.

The Office has updated the PAIR screen to reflect that the correct Patent Term Adjustment (PTA) determination at the time of the mailing of the Notice of Allowance is **two hundred forty-five (245) days**. A copy of the updated PAIR screen, showing the correct determination, is enclosed.

On July 5, 2007, the Office mailed the Determination of Patent Term Adjustment under 35 U.S.C. 154(b) in the above identified application. The Notice stated that the patent term adjustment (PTA) to date is one hundred sixty-one (161) days. On August 20, 2007, Applicants timely[1] submitted the instant application for patent term adjustment, asserting that the correct number of days of PTA at the time of the mailing of the Notice of Allowance is two hundred forty-five (245) days.

---

[1] Applicants filed the application for patent term adjustment prior to payment of the issue fee.

Applicants assert entitlement to a patent term adjustment of two hundred forty-five (245) days on the basis that the PTO improperly assessed Applicant a delay of eighty-four (84) days pursuant to 37 CFR 1.704(c)(7) for filing a response to a Notice of Non-Compliant Amendment. Applicant argues that the Notice of Non-Compliant Amendment was mailed in error.

Applicants state that the patent issuing from the application is not subject to a terminal disclaimer.

The Office initially determined a patent term adjustment of one hundred sixty-one (161) days based on an adjustment for PTO delay of two hundred seventy-one (271) days pursuant to 35 U.S.C. 154(b)(1)(A)(i) and 37 C.F.R. § 1.703(a)(1), reduced by Applicants' delay of twenty-six (26) days pursuant to 35 U.S.C. 154(b)(2)(C)(i) and 37 C.F.R. § 1.704(c)(8), and eighty-four (84) days pursuant to 35 U.S.C. 154(b)(2)(C)(i) days and 37 C.F.R. § 1.704(c)(7). The adjustment of 84 days is at issue.

The Office mailed a Notice of Non-Compliant Amendment on August 8, 2006, in response to an Amendment filed on May 23, 2006. Applicant filed a response to the Notice on August 15, 2006, stating that May 23, 2006 Amendment was in fact compliant, and were assessed eighty-four (84) days of applicant delay pursuant to 37 C.F.R. 1.704(c)(7). In an Office action mailed November 15, 2006, the Examiner agreed that the Notice of Non-Compliant Amendment was mailed in error. As such, Applicants should not have been assessed any days of applicant delay under 37 CFR 1.704(c)(7) for their August 15, 2006 response.

Accordingly, the correct determination of PTA at the time of mailing of the Notice of Allowance is **two hundred forty-five (245) days** (271 days of PTO delay and 26 days of applicant delay).

The $200 fee under § 1.18(e) has been charged to Deposit Account No. 19-3880, as authorized.

The application is being forwarded to the Office of Patent Publication for processing into a patent.

Telephone inquiries specific to this matter should be directed to Cliff Congo, Petitions Attorney, at (571)272-3207.

Nancy Johnson
Senior Petitions Attorney
Office of Petitions

Enc: updated PAIR screen (2 pages)

Day : Friday
Date: 12/28/2007

PALM INTRANET

Time: 16:41:13

PTA Calculations for Application: 10/412897			
Application Filing Date:	04/11/2003	PTO Delay (PTO):	271
Issue Date of Patent:		Three Years:	0
Pre-Issue Petitions:	0	Applicant Delay (APPL):	110
Post-Issue Petitions:	0	Total PTA (days):	245
PTO Delay Adjustment:	84		

File Contents History

Number	Date	Contents Description	PTO	APPL	START
85	12/28/2007	ADJUSTMENT OF PTA CALCULATION BY PTO	84		
71	07/05/2007	MAIL NOTICE OF ALLOWANCE			
70	07/02/2007	NOTICE OF ALLOWANCE DATA VERIFICATION COMPLETED			
69	06/27/2007	INFORMATION DISCLOSURE STATEMENT (IDS) FILED			
68	06/26/2007	MAIL EXAMINER'S AMENDMENT			
67	06/21/2007	ISSUE REVISION COMPLETED			
66	06/21/2007	DOCUMENT VERIFICATION			
65	06/21/2007	EXAMINER'S AMENDMENT COMMUNICATION			
64	06/21/2007	NOTICE OF ALLOWABILITY			
63	05/23/2007	DATE FORWARDED TO EXAMINER			
62	05/21/2007	AMENDMENT AFTER FINAL REJECTION			
61	04/30/2007	MAIL FINAL REJECTION (PTOL - 326)			
60	04/26/2007	FINAL REJECTION			
59	02/28/2007	DATE FORWARDED TO EXAMINER			
58	02/13/2007	RESPONSE AFTER NON-FINAL ACTION			
57	11/15/2006	MAIL NON-FINAL REJECTION			
56	11/13/2006	NON-FINAL REJECTION			
55	09/07/2006	DATE FORWARDED TO EXAMINER			
54	08/15/2006	RESPONSE AFTER NON-FINAL ACTION		84	51
53	08/08/2006	MAIL NOTICE OF INFORMAL OR NON-RESPONSIVE AMENDMENT			
52	05/24/2006	DATE FORWARDED TO EXAMINER			
51.1	05/23/2006	INFORMAL OR NON-RESPONSIVE AMENDMENT AFTER EXAMINER ACTION			
51	05/23/2006	RESPONSE AFTER NON-FINAL ACTION			

50	05/17/2006	MAIL NON-FINAL REJECTION			
49	05/15/2006	NON-FINAL REJECTION			
48	03/10/2006	DATE FORWARDED TO EXAMINER			
47	03/06/2006	AMENDMENT SUBMITTED/ENTERED WITH FILING OF CPA/RCE			
46	03/10/2006	DATE FORWARDED TO EXAMINER			
45	03/06/2006	REQUEST FOR CONTINUED EXAMINATION (RCE)			
44	03/10/2006	DISPOSAL FOR A RCE/CPA/129 (EXPRESS ABANDONMENT IF CPA)			
43	03/06/2006	WORKFLOW - REQUEST FOR RCE - BEGIN			
42	02/02/2006	MAIL ADVISORY ACTION (PTOL - 303)			
41	02/01/2006	ADVISORY ACTION (PTOL-303)			
40	01/24/2006	DATE FORWARDED TO EXAMINER			
39	01/11/2006	AMENDMENT AFTER FINAL REJECTION			
38	12/09/2005	MAIL FINAL REJECTION (PTOL - 326)			
37	12/07/2005	FINAL REJECTION			
36	08/08/2005	INFORMATION DISCLOSURE STATEMENT CONSIDERED			
35	10/18/2005	DATE FORWARDED TO EXAMINER			
34	09/13/2005	RESPONSE AFTER NON-FINAL ACTION			
33	08/08/2005	REFERENCE CAPTURE ON IDS			
32.7	08/08/2005	INFORMATION DISCLOSURE STATEMENT (IDS) FILED			
32	08/08/2005	INFORMATION DISCLOSURE STATEMENT (IDS) FILED			
31	06/28/2005	CASE DOCKETED TO EXAMINER IN GAU			
30	06/17/2005	MAIL NON-FINAL REJECTION			
29	06/06/2005	REFERENCE CAPTURE ON IDS			
28.7	06/06/2005	INFORMATION DISCLOSURE STATEMENT (IDS) FILED		26	23
28	06/06/2005	INFORMATION DISCLOSURE STATEMENT (IDS) FILED			
27	06/13/2005	NON-FINAL REJECTION			
26	05/18/2005	DATE FORWARDED TO EXAMINER			
25	05/11/2005	SUPPLEMENTAL RESPONSE			
24	05/18/2005	DATE FORWARDED TO EXAMINER			
23	05/11/2005	RESPONSE TO ELECTION / RESTRICTION FILED			
22	05/11/2005	REQUEST FOR EXTENSION OF TIME - GRANTED			

21	03/09/2005	MAIL RESTRICTION REQUIREMENT	271		-1
20	03/07/2005	REQUIREMENT FOR RESTRICTION / ELECTION			
19	04/14/2004	IFW TSS PROCESSING BY TECH CENTER COMPLETE			
18	04/14/2004	CASE DOCKETED TO EXAMINER IN GAU			
17	02/02/2004	REFERENCE CAPTURE ON IDS			
16.7	01/12/2004	INFORMATION DISCLOSURE STATEMENT (IDS) FILED			
16	01/12/2004	INFORMATION DISCLOSURE STATEMENT (IDS) FILED			
15	08/20/2003	APPLICATION RETURN FROM OIPE			
14	08/20/2003	APPLICATION IS NOW COMPLETE			
13	08/20/2003	APPLICATION RETURN TO OIPE			
12	08/20/2003	APPLICATION DISPATCHED FROM OIPE			
11	08/20/2003	APPLICATION IS NOW COMPLETE			
10	07/18/2003	ADDITIONAL APPLICATION FILING FEES			
9	07/18/2003	A STATEMENT BY ONE OR MORE INVENTORS SATISFYING THE REQUIREMENT UNDER 35 USC 115, OATH OF THE APPLIC			
8	06/10/2003	NOTICE MAILED--APPLICATION INCOMPLETE--FILING DATE ASSIGNED			
6	05/15/2003	CLEARED BY L&R (LARS)			
5	05/14/2003	IFW SCAN & PACR AUTO SECURITY REVIEW			
4	05/03/2003	IFW SCAN & PACR AUTO SECURITY REVIEW			
3	05/01/2003	CRF IS GOOD TECHNICALLY / ENTERED INTO DATABASE			
2	04/11/2003	CRF DISK HAS BEEN RECEIVED BY PREEXAM / GROUP / PCT			
1	04/11/2003	INITIAL EXAM TEAM NN			

Search Another: Application# Search

EXPLANATION OF PTA CALCULATION

EXPLANATION OF PTE CALCULATION

To go back, right click here and select Back. To go forward, right click here and select Forward. To refresh, right click here and select Refresh.

Back to OASIS | Home page

UNITED STATES PATENT AND TRADEMARK OFFICE

COMMISSIONER FOR PATENTS
UNITED STATES PATENT AND TRADEMARK OFFICE
P.O. BOX 1450
ALEXANDRIA, VA 22313-1450
www.uspto.gov

APR 22 2004

REINHART BOERNER VAN DEUREN S.C.
1000 NORTH WATER STREET
SUITE 2100
MILWAUKEE, WI 53202

In re Application of	:	
Geoffrey Garth	:	
Serial No.: 10/412,908	:	DECISION ON PETITION
Filed: April 14, 2003	:	
For: Back Brace	:	

This is in response to applicants' petition filed April 14, 2003, to make the above-identified application special under the provisions of 37 CFR 1.102(d), based on infringement.

Applicant has satisfied the provisions set forth in M.P.E.P. 708.02, II. Therefore the petition is **GRANTED**.

The application will be forwarded to the examiner for action on the merits commensurate with this decision.

Should there be any questions with regard to this letter please contact John Kittle by letter addressed to the Director, Technology Center 3700/2900, or by telephone at (703) 308-0873 or by facsimile transmission at (703) 308-3139.

John E. Kittle

John E. Kittle
Director
Technology Center 3700/2900

UNITED STATES PATENT AND TRADEMARK OFFICE

Commissioner for Patents
United States Patent and Trademark Office
P.O. Box 1450
Alexandria, VA 22313-1450
www.uspto.gov

APR 2 2 2004

ROBERT D. FISH; RUTAN & TUCKER, LLP
P.O. BOX 1950
611 ANTON BLVD., 14TH FLOOR
COSTA MESA CA 92628-1950

In re Application of	:	
Norman Carte et al	:	
Serial No.: 10/412,908	:	DECISION ON PETITION
Filed: April 14, 2003	:	
For: Back Brace	:	

This is in response to applicants' petition filed March 8, 2003, to make the above-identified application special under the provisions of 37 CFR 1.102(d), based on infringement.

Applicant has satisfied the provisions set forth in M.P.E.P. 708.02, II. Therefore the petition is **GRANTED**.

The application will be forwarded to the examiner for action on the merits commensurate with this decision.

Should there be any questions with regard to this letter please contact John Kittle by letter addressed to the Director, Technology Center 3700/2900, or by telephone at (703) 308-0873 or by facsimile transmission at (703) 308-3139.

John E. Kittle

John E. Kittle
Director
Technology Center 3700/2900

UNITED STATES PATENT AND TRADEMARK OFFICE

Commissioner for Patents
United States Patent and Trademark Office
P.O. Box 1450
Alexandria, VA 22313-1450
www.uspto.gov

Vierra Magen Marcus & DeNiro LLP
575 Market Street, Suite 2500
San Francisco, CA 94105

MAILED

SEP 28 2009

OFFICE OF PETITIONS

In re Application of	:	
Gilbert H. Hong	:	
Application No. 10/412,973	:	DECISION ON PETITION
Filed: April 14, 2003	:	TO WITHDRAW
Attorney Docket No. HONG-01000US0	:	FROM RECORD
	:	

This is a decision on the Request to Withdraw as attorney or agent of record under 37 C.F.R. § 1.36(b), filed July 31, 2009.

The request is **APPROVED**.

A grantable request to withdraw as attorney/agent of record must be signed by every attorney/agent seeking to withdraw or contain a clear indication that one attorney is signing on behalf of another/others. A request to withdraw will not be approved unless at least 30 (thirty) days would remain between the date of approval and the later of the expiration date of a time to file a response or the expiration date of the maximum time period which can be extended under 37 C.F.R. § 1.136(a).

The request was signed by Richard A. Nebb on behalf of all attorneys of record. All attorneys/agents have been withdrawn. Applicant is reminded that there is no attorney of record at this time.

All future correspondence will be directed to the first named inventor Gilbert H. Hong at the address indicated below.

There is an outstanding Office action mailed April 30, 2009 that requires a reply from the applicant.

Telephone inquiries concerning this decision should be directed to Terri Johnson at 571-272-2991.

Terri Johnson
Petitions Examiner
Office of Petitions

cc: **Gilbert H. Hong**
3586 Ramblewood Place
Fremont, CA 94536

UNITED STATES PATENT AND TRADEMARK OFFICE

UNITED STATES DEPARTMENT OF COMMERCE
United States Patent and Trademark Office
Address: COMMISSIONER FOR PATENTS
P.O. Box 1450
Alexandria, Virginia 22313-1450
www.uspto.gov

APPLICATION NUMBER	FILING OR 371(C) DATE	FIRST NAMED APPLICANT	ATTY. DOCKET NO./TITLE
10/412,973	04/14/2003	Gilbert H. Hong	HONG-01000US0

CONFIRMATION NO. 3265

POWER OF ATTORNEY NOTICE

28554
Vierra Magen Marcus & DeNiro LLP
575 Market Street, Suite 2500
San Francisco, CA 94105

OC000000037990977

Date Mailed: 09/25/2009

NOTICE REGARDING CHANGE OF POWER OF ATTORNEY

This is in response to the Power of Attorney filed 07/31/2009.

- The withdrawal as attorney in this application has been accepted. Future correspondence will be mailed to the new address of record. 37 CFR 1.33.

/tsjohnson/

Office of Data Management, Application Assistance Unit (571) 272-4000, or (571) 272-4200, or 1-888-786-0101

UNITED STATES PATENT AND TRADEMARK OFFICE

Commissioner for Patents
United States Patent and Trademark Office
P.O. Box 1450
Alexandria, VA 22313-1450
www.uspto.gov

Paper No.

SCHERING-PLOUGH CORPORATION
PATENT DEPARTMENT (K-6-1, 1990)
2000 GALLOPING HILL ROAD
KENILWORTH NJ 07033-0530

In re Application of	:	
Chackalamannil et al.	:	LETTER REGARDING
Application No. 10/412,982	:	PATENT TERM ADJUSTMENT
Filed: April 14, 2003	:	
Atty Docket No. CV01568K	:	

This letter is in response to the "REQUEST FOR RECONSIDERATION OF PATENT TERM ADJUSTMENT ("PTA") UNDER 37 C.F.R. § 1.705(b)" filed July 10, 2007, notifying the Office of an error in Applicants' favor in the initial determination of patent term adjustment under 35 U.S.C. § 154(b). Applicants note that the correct patent term adjustment indicated in the Notice of Allowance mailed July 2, 2007 should be three hundred sixty-seven (367) days, not four hundred thirty-nine (439) days.

The request for correction of the initial determination of patent term adjustment (PTA) is **GRANTED to the extent indicated herein**. The determination of PTA at the time of the mailing of the Notice of Allowance mailed July 2, 2007 is **THREE HUNDRED THIRTY-FOUR (334)** days.

The Office has updated the PAIR screen to reflect that the correct Patent Term Adjustment determination at the time of the mailing of the Notice of Allowance was 334 days. A copy of the updated PAIR screen, showing the correct determination, is enclosed.

On July 2, 2007, the Office mailed the Determination of Patent Term Adjustment under 35 U.S.C. 154(b) in the above-identified application. The Notice stated that the patent term adjustment to date is 436 days. This determination accompanied the second Notice of Allowance mailed after the filing of a Request for Continued Examination (RCE). Yet, it stated the same patent

term adjustment determination (439 days) as the previous Notice of Allowance mailed on January 10, 2007. Applicants disclose that the PTA determination should have been further reduced given the filing of the Request for Continued Examination (RCE) on April 9, 2007 and the filing of an Information Disclosure Statement (IDS), 72 days later on June 20, 2007. Accordingly, applicants assert that the PTA should have been further reduced by 72 days to 367 days.

Applicants state that the present application is not subject to a terminal disclaimer.

Applicants are correct that entry of an additional period of reduction is warranted. However, their calculation is incorrect. The correct basis for the reduction is 37 CFR 1.704(c)(10). The correct period of reduction is 105 days.

Circumstances that constitute a failure of the applicant to engage in reasonable efforts to conclude processing or examination of an application also include the following circumstances, which will result in the following reduction of the period of adjustment set forth in § 1.703 to the extent that the periods are not overlapping:

> Submission of an amendment under § 1.312 or other paper after a notice of allowance has been given or mailed, in which case the period of adjustment set forth in § 1.703 shall be reduced by the lesser of:
>
> (i) The number of days, if any, beginning on the date the amendment under § 1.312 or other paper was filed and ending on the mailing date of the Office action or notice in response to the amendment under § 1.312 or such other paper; or
>
> (ii) Four months;

After the mailing of the Notice of Allowance on January 10, 2007, applicants filed:

- on March 20, 2007, a 312 amendment and a Request for Correction of Inventorship;
- on April 9, 2007, the Request for Continued Examination (RCE)(required for consideration of the papers filed March 20, 2007) and resubmitted 312

amendment and Request for Correction of Inventorship both signed April 9, 2007; and

- on June 20, 2007, an Information Disclosure Statement (IDS). This IDS did not include a 1.704(d) statement.

On July 2, 2007, the Office mailed a Notice of Allowance and an initialed 1449 responding to all of the above-mentioned papers. Thus, considering periods of overlap, the total period of reduction is 105 days for the period beginning on the date the first papers were filed after the mailing of the notice of allowance, March 20, 2007, and ending on July 2, 2007, the date the Office mailed responses to all of the papers.

In view thereof, the correct patent term adjustment at the time of the mailing of the notice of allowance is 334 days.

As this letter was submitted to advise the Office of an error in Applicants' favor, the Office will not assess the $200.00 application fee under 37 CFR 1.705(b). The Office thanks Applicants for their good faith and candor in bringing this matter to the attention of the Office.

The fee submitted is being refunded to Deposit Account No. 19-0365, as authorized.

The application file is being forwarded to the Office of Patent Publication for issuance of the patent. The patent term adjustment indicated on the patent should include any additional patent term adjustment accrued for the Office failing to issue the application within 4 months of the payment of the issue fee and satisfaction of all outstanding requirements.

Telephone inquiries specific to this letter should be directed to the undersigned at (571) 272-3219.

Nancy Johnson

Nancy Johnson
Senior Petitions Attorney
Office of Petitions

Enclosure: Copy of updated PALM Screen

Day : Tuesday
Date: 9/25/2007

PALM INTRANET

Time: 21:14:44

PTA Calculations for Application: 10/412982			
Application Filing Date:	04/14/2003	PTO Delay (PTO):	540
Issue Date of Patent:		Three Years:	0
Pre-Issue Petitions:	0	Applicant Delay (APPL):	101
Post-Issue Petitions:	0	Total PTA (days):	334
PTO Delay Adjustment:	-105		

File Contents History

Number	Date	Contents Description	PTO	APPL	START
72	09/25/2007	ADJUSTMENT OF PTA CALCULATION BY PTO		105	
66	07/02/2007	MAIL NOTICE OF ALLOWANCE			
65	06/27/2007	ISSUE REVISION COMPLETED			
64	06/27/2007	DOCUMENT VERIFICATION			
63	06/25/2007	NOTICE OF ALLOWANCE DATA VERIFICATION COMPLETED			
62	06/25/2007	NOTICE OF ALLOWABILITY			
61	06/20/2007	INFORMATION DISCLOSURE STATEMENT CONSIDERED			
60	06/20/2007	INFORMATION DISCLOSURE STATEMENT CONSIDERED			
59	06/20/2007	INFORMATION DISCLOSURE STATEMENT (IDS) FILED			
58	06/20/2007	INFORMATION DISCLOSURE STATEMENT (IDS) FILED			
57	04/18/2007	DATE FORWARDED TO EXAMINER			
56	04/09/2007	AMENDMENT SUBMITTED/ENTERED WITH FILING OF CPA/RCE			
55	04/18/2007	DATE FORWARDED TO EXAMINER			
54	04/09/2007	REQUEST FOR CONTINUED EXAMINATION (RCE)			
53	04/18/2007	DISPOSAL FOR A RCE/CPA/129 (EXPRESS ABANDONMENT IF CPA)			
52	04/09/2007	RULE 47 / 48 CORRECTION OF INVENTORSHIP PAPERS FILED			
51	04/12/2007	FINISHED INITIAL DATA CAPTURE			
50	04/09/2007	PUBS CASE REMAND TO TC			
49	04/09/2007	WORKFLOW - REQUEST FOR RCE - BEGIN			

48	01/16/2007	EXPORT TO INITIAL DATA CAPTURE			
47	01/10/2007	MAIL NOTICE OF ALLOWANCE			
46	01/09/2007	ISSUE REVISION COMPLETED			
45	01/09/2007	NOTICE OF ALLOWANCE DATA VERIFICATION COMPLETED			
44	01/09/2007	CASE DOCKETED TO EXAMINER IN GAU			
43	01/08/2007	NOTICE OF ALLOWABILITY			
42	01/08/2007	DATE FORWARDED TO EXAMINER			
41	12/22/2006	RESPONSE AFTER NON-FINAL ACTION			
40	10/23/2006	MAIL NON-FINAL REJECTION			
39	10/16/2006	NON-FINAL REJECTION			
38	09/12/2006	INFORMATION DISCLOSURE STATEMENT CONSIDERED			
37	08/07/2006	INFORMATION DISCLOSURE STATEMENT CONSIDERED			
36.7	09/12/2006	INFORMATION DISCLOSURE STATEMENT (IDS) FILED		36	33
36	09/12/2006	INFORMATION DISCLOSURE STATEMENT (IDS) FILED			
35	08/07/2006	RULE 47 / 48 CORRECTION OF INVENTORSHIP PAPERS FILED			
34	08/12/2006	DATE FORWARDED TO EXAMINER			
33	08/07/2006	RESPONSE AFTER NON-FINAL ACTION		2	30
32	08/07/2006	REFERENCE CAPTURE ON IDS			
31.7	08/07/2006	INFORMATION DISCLOSURE STATEMENT (IDS) FILED			
31	08/07/2006	INFORMATION DISCLOSURE STATEMENT (IDS) FILED			
30	05/05/2006	MAIL NON-FINAL REJECTION	104		25
29	05/01/2006	NON-FINAL REJECTION			
28	11/23/2005	INFORMATION DISCLOSURE STATEMENT CONSIDERED			
27.7	11/23/2005	INFORMATION DISCLOSURE STATEMENT (IDS) FILED		63	25
27	11/23/2005	INFORMATION DISCLOSURE STATEMENT (IDS) FILED			
26	05/01/2006	DATE FORWARDED TO EXAMINER			
25	09/21/2005	RESPONSE TO ELECTION / RESTRICTION FILED			
24	11/23/2005	INFORMATION DISCLOSURE STATEMENT CONSIDERED			

23	07/08/2004	INFORMATION DISCLOSURE STATEMENT CONSIDERED			
21	08/24/2005	MAIL RESTRICTION REQUIREMENT	436		-1
20	08/22/2005	REQUIREMENT FOR RESTRICTION / ELECTION			
19	08/10/2004	CASE DOCKETED TO EXAMINER IN GAU			
18	07/08/2004	REFERENCE CAPTURE ON IDS			
17.7	07/08/2004	INFORMATION DISCLOSURE STATEMENT (IDS) FILED			
17	07/08/2004	INFORMATION DISCLOSURE STATEMENT (IDS) FILED			
16	03/15/2004	WORKFLOW INCOMING AMENDMENT IFW			
15	03/19/2004	IFW AMENDED CASE PROCESSING COMPLETE			
14	03/15/2004	PRELIMINARY AMENDMENT			
13	10/18/2003	IFW TSS PROCESSING BY TECH CENTER COMPLETE			
12	08/29/2003	PRELIMINARY AMENDMENT			
11	07/09/2003	CASE DOCKETED TO EXAMINER IN GAU			
10	06/11/2003	APPLICATION RETURN FROM OIPE			
9	06/12/2003	APPLICATION IS NOW COMPLETE			
8	06/11/2003	PRE-EXAM OFFICE ACTION WITHDRAWN			
7	06/11/2003	APPLICATION RETURN TO OIPE			
6	06/11/2003	APPLICATION DISPATCHED FROM OIPE			
5	06/11/2003	APPLICATION IS NOW COMPLETE			
4	05/15/2003	CLEARED BY L&R (LARS)			
3	05/14/2003	IFW SCAN & PACR AUTO SECURITY REVIEW			
2	05/01/2003	IFW SCAN & PACR AUTO SECURITY REVIEW			
1	04/14/2003	INITIAL EXAM TEAM NN			

Search Another: Application# Search

EXPLANATION OF PTA CALCULATION

EXPLANATION OF PTE CALCULATION

To go back use Back button on your browser toolbar.

Back to PALM | ASSIGNMENT | OASIS | Home page

UNITED STATES PATENT AND TRADEMARK OFFICE

Commissioner for Patents
United States Patent and Trademark Office
P.O. Box 1450
Alexandria, VA 22313-1450
www.uspto.gov

Paper No.

SCHERING-PLOUGH CORPORATION
PATENT DEPARTMENT (K-6-1, 1990)
2000 GALLOPING HILL ROAD
KENILWORTH NJ 07033-0530

COPY MAILED

SEP 27 2007

OFFICE OF PETITIONS

In re Application of	:	
Chackalamannil et al.	:	LETTER REGARDING
Application No. 10/412,982	:	PATENT TERM ADJUSTMENT
Filed: April 14, 2003	:	
Atty Docket No. CV01568K	:	

This letter is in response to the "REQUEST FOR RECONSIDERATION OF PATENT TERM ADJUSTMENT ("PTA") UNDER 37 C.F.R. § 1.705(b)" filed July 10, 2007, notifying the Office of an error in Applicants' favor in the initial determination of patent term adjustment under 35 U.S.C. § 154(b). Applicants note that the correct patent term adjustment indicated in the Notice of Allowance mailed July 2, 2007 should be three hundred sixty-seven (367) days, not four hundred thirty-nine (439) days.

The request for correction of the initial determination of patent term adjustment (PTA) is **GRANTED to the extent indicated herein**. The determination of PTA at the time of the mailing of the Notice of Allowance mailed July 2, 2007 is **THREE HUNDRED THIRTY-FOUR (334)** days.

The Office has updated the PAIR screen to reflect that the correct Patent Term Adjustment determination at the time of the mailing of the Notice of Allowance was 334 days. A copy of the updated PAIR screen, showing the correct determination, is enclosed.

On July 2, 2007, the Office mailed the Determination of Patent Term Adjustment under 35 U.S.C. 154(b) in the above-identified application. The Notice stated that the patent term adjustment to date is 436 days. This determination accompanied the second Notice of Allowance mailed after the filing of a Request for Continued Examination (RCE). Yet, it stated the same patent

term adjustment determination (439 days) as the previous Notice of Allowance mailed on January 10, 2007. Applicants disclose that the PTA determination should have been further reduced given the filing of the Request for Continued Examination (RCE) on April 9, 2007 and the filing of an Information Disclosure Statement (IDS), 72 days later on June 20, 2007. Accordingly, applicants assert that the PTA should have been further reduced by 72 days to 367 days.

Applicants state that the present application is not subject to a terminal disclaimer.

Applicants are correct that entry of an additional period of reduction is warranted. However, their calculation is incorrect. The correct basis for the reduction is 37 CFR 1.704(c)(10). The correct period of reduction is 105 days.

Circumstances that constitute a failure of the applicant to engage in reasonable efforts to conclude processing or examination of an application also include the following circumstances, which will result in the following reduction of the period of adjustment set forth in § 1.703 to the extent that the periods are not overlapping:

> Submission of an amendment under § 1.312 or other paper after a notice of allowance has been given or mailed, in which case the period of adjustment set forth in § 1.703 shall be reduced by the lesser of:
>
> (i) The number of days, if any, beginning on the date the amendment under § 1.312 or other paper was filed and ending on the mailing date of the Office action or notice in response to the amendment under § 1.312 or such other paper; or
>
> (ii) Four months;

After the mailing of the Notice of Allowance on January 10, 2007, applicants filed:

- on March 20, 2007, a 312 amendment and a Request for Correction of Inventorship;
- on April 9, 2007, the Request for Continued Examination (RCE)(required for consideration of the papers filed March 20, 2007) and resubmitted 312

amendment and Request for Correction of Inventorship both signed April 9, 2007; and

- on June 20, 2007, an Information Disclosure Statement (IDS). This IDS did not include a 1.704(d) statement.

On July 2, 2007, the Office mailed a Notice of Allowance and an initialed 1449 responding to all of the above-mentioned papers. Thus, considering periods of overlap, the total period of reduction is 105 days for the period beginning on the date the first papers were filed after the mailing of the notice of allowance, March 20, 2007, and ending on July 2, 2007, the date the Office mailed responses to all of the papers.

In view thereof, the correct patent term adjustment at the time of the mailing of the notice of allowance is 334 days.

As this letter was submitted to advise the Office of an error in Applicants' favor, the Office will not assess the $200.00 application fee under 37 CFR 1.705(b). The Office thanks Applicants for their good faith and candor in bringing this matter to the attention of the Office.

The fee submitted is being refunded to Deposit Account No. 19-0365, as authorized.

The application file is being forwarded to the Office of Patent Publication for issuance of the patent. The patent term adjustment indicated on the patent should include any additional patent term adjustment accrued for the Office failing to issue the application within 4 months of the payment of the issue fee and satisfaction of all outstanding requirements.

Telephone inquiries specific to this letter should be directed to the undersigned at (571) 272-3219.

Nancy Johnson

Nancy Johnson
Senior Petitions Attorney
Office of Petitions

Enclosure: Copy of updated PALM Screen

UNITED STATES PATENT AND TRADEMARK OFFICE

COMMISSIONER FOR PATENTS
UNITED STATES PATENT AND TRADEMARK OFFICE
P.O. BOX 1450
ALEXANDRIA, VA 22313-1450
www.uspto.gov

MAY 20 2004

Paper No. 7

In re Application of
Andreas Frank
Application No. 10/413,009
Filed: April 14, 2003
Attorney Docket No. 03-203

DECISION ON PETITION

This is a decision on the petition filed on April 29, 2003 by which petitioner requests withdrawal of the examiner's holding that this application stands abandoned for failure to file a proper and timely reply to the Office action dated October 3, 2003. The petition is considered pursuant to 37 CFR 1.181, and no fee is required.

The petition is dismissed.

Petitioner alleges that the application is not abandoned because petitioner did not receive the Office letter in question, and therefore could not file a reply.

MPEP § 711.03(c) contains a discussion of the Notice originally published at 1156 OG 53 which sets forth the minimum showing required to establish nonreceipt of Office correspondence. Petitioner has not furnished a showing in compliance with that Notice. Therefore, the allegation of nonreceipt of the Office letter dated October 3, 2003 has not been proven.

Petitioner may file a renewed petition, without fee, directed to the attention of the undersigned, in which petitioner presents evidence that will satisfy the requirements of the above mentioned Notice. The renewed petition must be filed within two months of the date of this decision. See 37 CFR 1.181(f).

The application is being retained in Technology Center 3700 pending further action by petitioner.

E. Rollins-Cross

E. Rollins-Cross, Director
Technology Center 3700

Bachman and LaPointe, P.C.
900 Chapel Street
Suite 1201
New Haven, CT 06510

UNITED STATES PATENT AND TRADEMARK OFFICE

COMMISSIONER FOR PATENTS
UNITED STATES PATENT AND TRADEMARK OFFICE
P.O. BOX 1450
ALEXANDRIA, VA 22313-1450
www.uspto.gov

JUN 17 2004

Paper No. 9

In re Application of
Andreas Frank
Application No. 10/413,009
Filed: April 14, 2003
Attorney Docket No. 03-203

DECISION ON
RENEWED PETITION

This is a decision on the renewed petition filed on May 28, 2004 by which petitioner again requests withdrawal of the examiner's holding that this application stands abandoned for failure to file a proper and timely reply to the Office action dated October 3, 2003. The renewed petition is considered pursuant to 37 CFR 1.181, and no fee is required.

The renewed petition is granted.

Petitioner has renewed the allegation that the application is not abandoned because petitioner did not receive the Office letter in question, and therefore could not file a reply. The allegation is now supported by a showing that satisfies the requirements established by the Notice originally published at 1156 OG 53 which sets forth the minimum showing required to establish nonreceipt of Office correspondence. In view of this showing, nonreceipt of the Office letter dated October 3, 2003 has not been proven, and it is apparent that the application is not abandoned.

Accordingly, the Notice of Abandonment is hereby vacated, the holding of abandonment is withdrawn, and the application is restored to pending status. The application is being forwarded to the Head Supervisory Applications Examiner in Technology Center 3700 for remailing a complete copy of the Office letter dated October 3, 2003, together with all attachments thereto including references. The period for reply to the remailed Office action will run THREE MONTHS from the date upon which the action is remailed, and can be extended up to the statutory maximum of six months under the provisions of 37 CFR 1.136(a).

PETITION GRANTED.

E. Rollins-Cross, Director
Technology Center 3700

Bachman and LaPointe, P.C.
900 Chapel Street
Suite 1201
New Haven, CT 06510

UNITED STATES PATENT AND TRADEMARK OFFICE

Commissioner for Patents
United States Patent and Trademark Office
P.O. Box 1450
Alexandria, VA 22313-1450
www.uspto.gov

SEP 15 2005

McGlew & Tuttle, PC
P.O. Box 9227
Scarborough Station
Scarborough, NY 10510-9227

In re Application of	:	DECISION ON
Gregor Ledinek et al.	:	PETITION TO
Application No. 10/413,012	:	WITHDRAW HOLDING
Filed: April 14, 2003	:	OF ABANDONMENT

For: MACHINE FOR FRONT JOINING AND STICKING OF OBLONG WOOD WORKIPIECES BY TOOTHED FRONT JOINTS AND REFERENTIAL PROCEDURE

This is a decision on applicant's petition to withdraw holding of abandonment, filed in the United States Patent and Trademark Office on March 9, 2005.

The petition is **DISMISSED**.

A review of the file record shows that an Office Action was mailed to applicant on July 19, 2004, wherein a three-month shortened statutory period for response was set. Since no timely response to the July 19, 2004 Office Action was received and the six-month statutory time period for reply expired, the application became abandoned and a notice to that effect was mailed on February 24, 2005.

Petitioner states that a response was filed on September 17, 2004 by facsimile transmission. In support thereof, petitioner has provided, *inter alia.,* 1) a copy of a response to the July 19, 2004 Office action, including a transmittal cover letter, 2) a copy of a Certificate of Transmission, on a separate page signed by Jennifer M. Spinning and dated September 17, 2004, and 3) a copy of the Auto-Reply Facsimile Transmission of the cover page of the paper sent September 17, 2004.

Petitioner's evidence of a timely filing, based on an Auto-Reply page and a Certificate of Transmission, is considered to be insufficient to withdraw the holding of abandonment. In this regard, any petition to withdraw the holding of abandonment based upon a Certificate of Transmission by facsimile must include the following requirements:

(1) A copy of the original response bearing a signed Certificate of Transmission which includes the date of signing; and

(2) A statement under 37 CFR 1.8(b)(3) attesting to the personal knowledge of transmitting the *original* response on the date indicated on the Certificate of Transmission (see 37 CFR 1.8 and MPEP 512).

Further, MPEP § 512 very specifically requires that,

> "(C) When the certification is presented on a separate sheet, that sheet must (1) be signed and (2) fully identify and be securely attached to the paper it accompanies. The required identification should include the application number and filing date of the application as well as the type of paper being filed, e.g., reply to rejection or refusal, Notice of Appeal, etc...
>
> Moreover, without the proper identifying data, a certification presented on a separate sheet will not be considered acceptable if there is any question or doubt concerning the connection between the sheet and the paper filed" (emphasis added).

The copy of the Certificate of Transmission submitted by petitioner is on a separate sheet and does not identify, in any way, the paper that it accompanied, and cannot be considered acceptable proof of a timely filing. Similarly, the copy of the Auto-Reply page does not identify the paper that was sent by facsimile, only that it was 11 pages long. Additionally, no statement under 37 CFR 1.8(b)(3) for Jennifer M. Spinning has been provided, as per requirement (2) above.

For these reasons, applicant's petition to withdraw the holding of abandonment is **DISMISSED**.

Applicant may wish to consider filing a petition to revive under 37 CFR 1.137(a) (unavoidable delay) or 37 CFR 1.137(b) (unintentional delay) as discussed below.

I. Unavoidable Delay.

A grantable petition to revive an abandoned application under 37 CFR 1.137(a) must be accompanied by: (1) the required reply (unless previously filed), which may be met by the filing of a continuing application in a nonprovisional application abandoned for failure to prosecute;(2) the petition fee required by 37 CFR 1.17(l); and (3) an adequate showing to the satisfaction of the Commissioner that the entire delay in filing the

required reply from the due date for the reply until the filing of a grantable petition pursuant to 37 CFR 1.137(a) was unavoidable.

The showing requirement can be met by submission of statements of fact establishing that the delay in filing the reply was unavoidable. This includes a satisfactory showing that the cause of the delay resulting in failure to reply in a timely fashion to the Office action was unavoidable. Diligence during the time period between abandonment and filing of the petition to revive must also be shown.

As an alternative to filing a petition for unavoidable abandonment, a petition for revival of an application abandoned unintentionally under 37 CFR 1.137(b) might be appropriate.

II. Unintentional Delay.

A grantable petition to revive an abandoned application under 37 CFR 1.137(b) must be accompanied by: (1) the required reply (unless previously filed), which may be met by the filing of a continuing application in a nonprovisional application abandoned for failure to prosecute; (2) the petition fee required by 37 CFR 1.17(m); and (3) a statement that the entire delay in filing the required reply from the due date for the reply until the filing of a grantable petition pursuant to 37 CFR 1.137(b) was unintentional.

The petition fee required by law for filing a petition under unavoidable standard is $500. The fee for a petition under the unintentional standard is $1,500. If applicant has, or can qualify as a "small entity" and does so prior to or together with the payment of the fee, the fee will be one-half of the amount indicated.

If not previously filed, the reply to the outstanding Office action must accompany the petition to revive.

The required items should be promptly submitted under a cover letter entitled "Petition to Revive".

Further correspondence with respect to this matter should be addressed as follows:

By mail: Mail Stop PETITION
Commissioner for Patents
Post Office Box 1450
Alexandria, VA 22313-1450

By hand: Customer Service Window
Randolph Building

401 Dulany Street
Alexandria, VA 22314

By FAX: 571-273-8300
ATTN: Office of Petitions

Telephone inquiries regarding petitions to revive should be directed to the Office of Petitions Staff at (571) 272-3282.

Any request for reconsideration of this decision must be submitted within **TWO (2) MONTHS** from the mail date of this decision. Extensions of time under 37 CFR 1.136(a) are permitted. The reconsideration request should include a cover letter entitled "Renewed Petition Under 37 CFR 1.181."

Kenneth J. Dorner
Special Programs Examiner
Patent Technology Center 3600
(571) 272-6587

KJD/js: 8/02/05

UNITED STATES PATENT AND TRADEMARK OFFICE

Commissioner for Patents
United States Patent and Trademark Office
P.O. Box 1450
Alexandria, VA 22313-1450
www.uspto.gov

NOV - 7 2005

McGlew & Tuttle, PC
P.O. Box 9227
Scarborough Station
Scarborough, NY 10510-9227

In re Application of	:	SUBSTITUTE
Gregor Ledinek et al.	:	DECISION ON
Application No. 10/413,012	:	PETITION TO
Filed: April 14, 2003	:	WITHDRAW HOLDING
	:	OF ABANDONMENT

For: MACHINE FOR FRONT JOINING AND STICKING OF OBLONG WOOD WORKIPIECES BY TOOTHED FRONT JOINTS AND REFERENTIAL PROCEDURE

This decision supersedes the decision mailed September 15, 2005.

The petition is **GRANTED**.

A review of the file record shows that an Office Action was mailed to applicant on July 19, 2004, wherein a three-month shortened statutory period for response was set. Since no timely response to the July 19, 2004 Office Action was received and the six-month statutory time period for reply expired, the application became abandoned and a notice to that effect was mailed on February 24, 2005. A petition to withdraw the holding of abandonment was filed on March 9, 2005. That petition was dismissed in a decision mailed September 15, 2005.

Since the mailing of the decision of September 15, 2005, the original amendment filed by the applicants on September 17, 2004 has been found by the Office and entered into the file. The original amendment was timely filed in response to the Office Action mailed on July 19, 2004.

Applicants' petition to withdraw the abandonment is **GRANTED.**

The application is being forwarded to the Supervisory Legal Instruments Examiner with instructions to enter the amendment of September 17, 2004, withdraw the holding of abandonment, and return the application to pending status so that it may be forwarded to the examiner of record for an action on the merits.

Kenneth J. Dorner
Special Programs Examiner
Patent Technology Center 3600
(571) 272-6587

KJD/bkg: 11/03/05

UNITED STATES PATENT AND TRADEMARK OFFICE

Commissioner for Patents
United States Patent and Trademark Office
P.O. Box 1450
Alexandria, VA 22313-1450
www.uspto.gov

JOHN T. WINBURN
100 BOSCH BOULEVARD
NEW BERN NC 28562

COPY MAILED
JUN 23 2006
OFFICE OF PETITIONS

In re Application of	:	
Wolfgang SCHNELL et al.	:	DECISION ON PETITIONS
Application No. 10/413,018	:	UNDER 37 CFR 1.183 AND
Filed: April 14, 2003	:	UNDER 37 CFR 1.78(a)(3)
Attorney Docket No. 2000P16024WOUS	:	

This is a decision on the petition under 37 CFR 1.183, filed March 20, 2006, requesting waiver of 37 CFR 1.78(a)(3) as that rule operates in conjunction with 37 CFR 1.17(t), and a decision on the petition under 37 CFR 1.78(a)(3), filed April 28, 2006, to accept an unintentionally delayed claim under 35 U.S.C. § 120 and 365(c) for the benefit of priority to prior-filed PCT Application No. PCT/EP01/11476, filed October 4, 2001, set forth in the accompanying Application Data Sheet.

The petition under 37 CFR 1.183 is **DISMISSED** as moot in view of the request filed April 28, 2006, withdrawing the petition to waive the surcharge fee requirement of 37 CFR 1.78(a)(3). No fee has been assessed to petitioner's deposit account for the petition under 37 CFR 1.183.

The petition under 37 CFR 1.78(a)(3) is **GRANTED.**

A petition for acceptance of a claim for late priority under 37 CFR 1.78(a)(3) is only applicable to those applications filed on or after November 29, 2000. Further, the petition is appropriate only after the expiration of the period specified in 37 CFR 1.78(a)(2)(ii). In addition, the petition under 37 CFR 1.78(a)(3) must be accompanied by:

(1) the reference required by 35 U.S.C. § 120 and 37 CFR 1.78(a)(2)(i) of the prior-filed application, unless previously submitted;
(2) the surcharge set forth in § 1.17(t); and
(3) a statement that the entire delay between the date the claim was due under 37 CFR 1.78(a)(2)(ii) and the date the claim was filed was unintentional. The Commissioner may require additional information where there is a question whether the delay was unintentional.

All the above requirements having been satisfied, the late claim for priority under 35 U.S.C. § 120 and 365(c) is accepted as being unintentionally delayed.

The granting of the petition to accept the delayed benefit claim to the prior-filed application under 37 CFR 1.78(a)(3) should not be construed as meaning that the application is entitled to the benefit of the prior-filed application. In order for the application to be entitled to the benefit of the prior-filed application, all other requirements under 35 U.S.C. §§ 120 and 365(c) and 37 CFR 1.78(a)(1) and (a)(2) must be met. Similarly, the fact that the corrected Filing Receipt accompanying this decision on petition includes the prior-filed application should not be construed as meaning that applicant is entitled to the claim for benefit of priority to the prior-filed application noted thereon. Accordingly, the examiner will, in due course, consider this benefit claim and determine whether the application is entitled to the benefit of the earlier filing date.

A corrected Filing Receipt, which includes the priority claim to the prior-filed application, accompanies this decision on petition.

Any inquiries concerning this decision may be directed to David Bucci at (571) 272-7099. All other inquiries concerning either the examination procedures or status of the application should be directed to the Technology Center.

This application is being forwarded to the examiner of Technology Center Art Unit 3634 for appropriate action on the amendment filed April 28, 2006, including consideration of applicant's entitlement to claim benefit of priority under 35 U.S.C. § 120 and 365(c) to the above-noted, prior-filed PCT application.

Brian Hearn
Petitions Examiner
Office of Petitions

ATTACHMENT: Corrected Filing Receipt

UNITED STATES PATENT AND TRADEMARK OFFICE

COMMISSIONER FOR PATENTS
UNITED STATES PATENT AND TRADEMARK OFFICE
P.O. BOX 1450
ALEXANDRIA, VA 22313-1450
www.uspto.gov

LERNER, DAVID, LITTENBERG,
KRUMHOLZ & MENTLIK
600 SOUTH AVENUE WEST
WESTFIELD NJ 07090

COPY MAILED

AUG 01 2007

OFFICE OF PETITIONS

In re Application of :
Bret A. Ferree, et al. :
Application No. 10/413,028 :
Filed: April 14, 2003 :
Attorney Docket No. BAF-13302/29 :

DECISION ON PETITION
UNDER 37 CFR 1.78(a)(6)

This is a decision on the petition under 37 CFR 1.78(a)(6), filed April 2, 2007, to accept an unintentionally delayed claim under 35 U.S.C. § 119(e) for the benefit of priority to a prior-filed provisional application.

The petition is **DISMISSED.**

A petition under 37 CFR 1.78(a)(6) is only applicable to those applications filed on or after November 29, 2000. Further, the petition is appropriate only after expiration of the period specified in 37 CFR 1.78(a)(5)(ii) and must be filed during the pendency of the nonprovisional application. In addition, the petition must be accompanied by:

(1) the reference required by 35 U.S.C. § 119(e) and 37 CFR 1.78(a)(5)(i) to the prior-filed application, unless previously submitted;
(2) the surcharge set forth in § 1.17(t); and
(3) a statement that the entire delay between the date the claim was due under 37 CFR 1.78(a)(5)(ii) and the date the claim was filed was unintentional. The Director may require additional information where there is a question whether the delay was unintentional.

This pending nonprovisional application was filed on April 14, 2003, within twelve months of the filing date of the prior-filed provisional application, Application No. 60/449,642, which was filed on February 24, 2003, and for which priority is claimed. A reference to the prior-filed provisional application has been included in an amendment to the first sentence of the specification following the title.

However, the amendment is not acceptable as drafted since it improperly incorporates by reference the prior-filed application. An incorporation by reference statement added after an application's filing date is not effective because no new matter can be added to an application after its filing date (*see* 35 U.S.C. § 132(a)). If an incorporation by reference statement is included in an amendment to the specification to add a benefit claim under 35 U.S.C. § 120 after the filing date of the application, the amendment would not be proper. When a benefit claim under 35 U.S.C. § 120 is submitted after the filing of an application, the reference to the prior application cannot include an incorporation by reference statement of the prior application. *See* Dart Industries v. Banner, 636 F.2d 684, 207 USPQ 273 (C.A.D.C. 1980). *Note* MPEP §§ 201.06(c) and 608.04(b).

Accordingly, before the petition under 37 CFR 1.78(a)(6) can be granted, a renewed petition under 37 CFR 1.78(a)(6) and either an Application Data Sheet or a substitute amendment (complying with 37 CFR 1.121 and 37 CFR 1.76(b)(5)) deleting the incorporation by reference statement, are required.

Further correspondence with respect to this matter should be addressed as follows:

By mail: Mail Stop PETITIONS
Commissioner for Patents
Post Office Box 1450
Alexandria, VA 22313-1450

By hand: Customer Service Window
Mail Stop Petitions
Randolph Building
401 Dulany Street
Alexandria, VA 22314

By fax: (571) 273-8300
ATTN: Office of Petitions

Any questions concerning this matter may be directed to the undersigned at (571) 272-3204.

Sherry D. Brinkley
Petitions Examiner
Office of Petitions

UNITED STATES PATENT AND TRADEMARK OFFICE

COMMISSIONER FOR PATENTS
UNITED STATES PATENT AND TRADEMARK OFFICE
P.O. BOX 1450
ALEXANDRIA, VA 22313-1450
www.uspto.gov

LERNER, DAVID, LITTENBERG,
KRUMHOLZ & MENTLIK
600 SOUTH AVENUE WEST
WESTFIELD NJ 07090

COPY MAILED

OCT 2 4 2007

OFFICE OF PETITIONS

In re Application of :
Bret A. Ferree, et al. :
Application No. 10/413,028 :
Filed: April 14, 2003 :
Attorney Docket No. BAF-13302/29 :

DECISION ON PETITION
UNDER 37 CFR 1.78(a)(6)

This is a decision on the renewed petition, filed October 4, 2007, which is being treated under 37 CFR 1.78(a)(6) to accept an unintentionally delayed claim under 35 U.S.C. §119(e) for the benefit of the prior-filed provisional application set forth in the concurrently filed amendment.

The petition is **GRANTED**.

A petition under 37 CFR 1.78(a)(6) is only applicable to those applications filed on or after November 29, 2000. Further, the petition is appropriate only after expiration of the period specified in 37 CFR 1.78(a)(5)(ii) and must be filed during the pendency of the nonprovisional application. In addition, the petition must be accompanied by:

(1) the reference required by 35 U.S.C. § 119(e) and 37 CFR 1.78(a)(5)(i) to the prior-filed application, unless previously submitted;
(2) the surcharge set forth in § 1.17(t); and
(3) a statement that the entire delay between the date the claim was due under 37 CFR 1.78(a)(5)(ii) and the date the claim was filed was unintentional. The Director may require additional information where there is a question whether the delay was unintentional.

Additionally, the instant nonprovisional application must be pending at the time of filing of the reference to the prior-filed provisional application as required by 37 CFR 1.78(a)(5)(ii). Further, the non-provisional application claiming the benefit of the prior-filed provisional application must have been filed within twelve months of the filing date of the prior-filed provisional application.

All of the above requirements having been satisfied, the late claim for priority under 35 U.S.C. § 119(e) is accepted as being unintentionally delayed.

The granting of the petition to accept the delayed benefit claim to the prior-filed application under 37 CFR 1.78(a)(6) should not be construed as meaning that this application is entitled to the benefit of the filing date of the prior-filed application. In order for this application to be entitled to the benefit of the prior-filed application, all other requirements under 35 U.S.C. §119(e) and 37 CFR 1.78(a)(4) and (a)(5) must be met. Similarly, the fact that the corrected Filing Receipt accompanying this decision on petition includes the prior-filed application should not be construed as meaning that applicant is entitled to the claim for benefit of priority to the prior-filed application noted thereon. Accordingly, the examiner will, in due course, consider this benefit claim and determine whether the application is entitled to the benefit of the earlier filing date.

A corrected Filing Receipt, which includes the priority claim to the prior-filed provisional application, accompanies this decision on petition.

Any inquiries concerning this decision may be directed to Sherry D. Brinkley at (571) 272-3204. All other inquiries concerning either the examination procedures or status of the application should be directed to the Technology Center.

The application is being forwarded to Technology Center AU 3738 for consideration by the examiner of the claim under 35 U.S.C. §119(e) for the benefit of priority to the prior-filed provisional application.

Sherry D. Brinkley

Sherry D. Brinkley
Petitions Examiner
Office of Petitions

Attachment: Corrected Filing Receipt

UNITED STATES PATENT AND TRADEMARK OFFICE

UNITED STATES DEPARTMENT OF COMMERCE
United States Patent and Trademark Office
Address: COMMISSIONER FOR PATENTS
P.O. Box 1450
Alexandria, Virginia 22313-1450
www.uspto.gov

APPLICATION NUMBER	FILING or 371(c) DATE	GRP ART UNIT	FIL FEE REC'D	ATTY.DOCKET.NO	TOT CLAIMS	IND CLAIMS
10/413,028	04/14/2003	3774	2240	SPINE 3.0-464	8	1

CONFIRMATION NO. 1913

CORRECTED FILING RECEIPT

530
LERNER, DAVID, LITTENBERG,
KRUMHOLZ & MENTLIK
600 SOUTH AVENUE WEST
WESTFIELD, NJ 07090

OC000000026337611

Date Mailed: 10/23/2007

Receipt is acknowledged of this non-provisional patent application. The application will be taken up for examination in due course. Applicant will be notified as to the results of the examination. Any correspondence concerning the application must include the following identification information: the U.S. APPLICATION NUMBER, FILING DATE, NAME OF APPLICANT, and TITLE OF INVENTION. Fees transmitted by check or draft are subject to collection. Please verify the accuracy of the data presented on this receipt. **If an error is noted on this Filing Receipt, please write to the Office of Initial Patent Examination's Filing Receipt Corrections. Please provide a copy of this Filing Receipt with the changes noted thereon. If you received a "Notice to File Missing Parts" for this application, please submit any corrections to this Filing Receipt with your reply to the Notice. When the USPTO processes the reply to the Notice, the USPTO will generate another Filing Receipt incorporating the requested corrections**

Applicant(s)

Bret A. Ferree, Cincinnati, OH;
David Thompkins, Milford, OH;

Power of Attorney:

Irvin Groh--17505
Allen Krass--18277
Ernest Gifford--20644
Ronald Citkowski--31005
Thomas Anderson--31318
Judith Riley--31561Douglas
McEvoy--34385Beverly
Bunting--36072Jeffrey
Michael--37394John Posa--37424

Domestic Priority data as claimed by applicant

This appln claims benefit of 60/372,520 04/12/2002
and claims benefit of 60/449,642 02/24/2003

Foreign Applications

If Required, Foreign Filing License Granted: 06/05/2003

The country code and number of your priority application, to be used for filing abroad under the Paris Convention, is **US 10/413,028**

Projected Publication Date: Not Applicable

Non-Publication Request: No

Early Publication Request: No
**** SMALL ENTITY ****

Title

Spacerless artificial disc replacements

Preliminary Class

623

PROTECTING YOUR INVENTION OUTSIDE THE UNITED STATES

Since the rights granted by a U.S. patent extend only throughout the territory of the United States and have no effect in a foreign country, an inventor who wishes patent protection in another country must apply for a patent in a specific country or in regional patent offices. Applicants may wish to consider the filing of an international application under the Patent Cooperation Treaty (PCT). An international (PCT) application generally has the same effect as a regular national patent application in each PCT-member country. The PCT process **simplifies** the filing of patent applications on the same invention in member countries, but **does not result** in a grant of "an international patent" and does not eliminate the need of applicants to file additional documents and fees in countries where patent protection is desired.

Almost every country has its own patent law, and a person desiring a patent in a particular country must make an application for patent in that country in accordance with its particular laws. Since the laws of many countries differ in various respects from the patent law of the United States, applicants are advised to seek guidance from specific foreign countries to ensure that patent rights are not lost prematurely.

Applicants also are advised that in the case of inventions made in the United States, the Director of the USPTO must issue a license before applicants can apply for a patent in a foreign country. The filing of a U.S. patent application serves as a request for a foreign filing license. The application's filing receipt contains further information and guidance as to the status of applicant's license for foreign filing.

Applicants may wish to consult the USPTO booklet, "General Information Concerning Patents" (specifically, the section entitled "Treaties and Foreign Patents") for more information on timeframes and deadlines for filing foreign patent applications. The guide is available either by contacting the USPTO Contact Center at 800-786-9199, or it can be viewed on the USPTO website at http://www.uspto.gov/web/offices/pac/doc/general/index.html.

For information on preventing theft of your intellectual property (patents, trademarks and copyrights), you may wish to consult the U.S. Government website, http://www.stopfakes.gov. Part of a Department of Commerce initiative, this website includes self-help "toolkits" giving innovators guidance on how to protect intellectual property in specific countries such as China, Korea and Mexico. For questions regarding patent enforcement issues, applicants may call the U.S. Government hotline at 1-866-999-HALT (1-866-999-4158).

LICENSE FOR FOREIGN FILING UNDER

Title 35, United States Code, Section 184

Title 37, Code of Federal Regulations, 5.11 & 5.15

GRANTED

The applicant has been granted a license under 35 U.S.C. 184, if the phrase "IF REQUIRED, FOREIGN FILING LICENSE GRANTED" followed by a date appears on this form. Such licenses are issued in all applications where the conditions for issuance of a license have been met, regardless of whether or not a license may be required as

set forth in 37 CFR 5.15. The scope and limitations of this license are set forth in 37 CFR 5.15(a) unless an earlier license has been issued under 37 CFR 5.15(b). The license is subject to revocation upon written notification. The date indicated is the effective date of the license, unless an earlier license of similar scope has been granted under 37 CFR 5.13 or 5.14.

This license is to be retained by the licensee and may be used at any time on or after the effective date thereof unless it is revoked. This license is automatically transferred to any related applications(s) filed under 37 CFR 1.53(d). This license is not retroactive.

The grant of a license does not in any way lessen the responsibility of a licensee for the security of the subject matter as imposed by any Government contract or the provisions of existing laws relating to espionage and the national security or the export of technical data. Licensees should apprise themselves of current regulations especially with respect to certain countries, of other agencies, particularly the Office of Defense Trade Controls, Department of State (with respect to Arms, Munitions and Implements of War (22 CFR 121-128)); the Bureau of Industry and Security, Department of Commerce (15 CFR parts 730-774); the Office of Foreign AssetsControl, Department of Treasury (31 CFR Parts 500+) and the Department of Energy.

NOT GRANTED

No license under 35 U.S.C. 184 has been granted at this time, if the phrase "IF REQUIRED, FOREIGN FILING LICENSE GRANTED" DOES NOT appear on this form. Applicant may still petition for a license under 37 CFR 5.12, if a license is desired before the expiration of 6 months from the filing date of the application. If 6 months has lapsed from the filing date of this application and the licensee has not received any indication of a secrecy order under 35 U.S.C. 181, the licensee may foreign file the application pursuant to 37 CFR 5.15(b).

UNITED STATES PATENT AND TRADEMARK OFFICE

RECEIVED

JUL 1 0 2003

NEEDLE & ROSENBERG

COMMISSIONER FOR PATENTS
UNITED STATES PATENT AND TRADEMARK OFFICE
P.O. BOX 1450
ALEXANDRIA, VA 22313-1450
WWW.USPTO.GOV

Paper No. 4

NEEDLE & ROSENBERG, P.C.
SUITE 1000
999 PEACHTREE STREET
ATLANTA GA 30309-3915

COPY MAILED

JUL 0 3 2003

OFFICE OF PETITIONS

In re Application of
Lizardi, et al.
Application No. 10/413,041
Filed: April 10, 2003
Attorney Docket No. 13172.0013~~US~~ 45
For: UNIMOLECULAR SEGMENT AMPLIFICATION AND SEQUENCING

: DECISION GRANTING
: PETITION

This is a decision on the petition under 37 CFR 1.10(c), filed May 12, 2003 (certificate of mailing date May 8, 2003), requesting that the above-identified application be accorded a filing date of April 10, 2003 rather than the presently accorded filing date of April 14, 2003.

Petitioners request the earlier filing date on the basis that the application was deposited in Express Mail service of the United States Postal Service (USPS) on April 10, 2003, pursuant to the requirements of 37 CFR 1.10. The petition is accompanied by a copy of Express Mail label no. EL924204657US showing a "date-in" of 4/10/03 **and** a USPS date stamp of APR 10 2003. The same Express Mail label number is listed on the original Utility Patent Application Transmittal found in the application file.

The evidence presented establishes that the Express Mail package associated with Express Mail label no. EL924204657US was deposited with the USPS on April 10, 2003.

Accordingly, the petition is granted.

No fee has been or will be charged in connection with this petition.

The application is being returned to the Office of Initial Patent Examination for correction of the filing date to **April 10, 2003**.

Any inquiries related to this decision should be directed to the undersigned at (703) 308-6712.

E Shirene Willis

E. Shirene Willis
Senior Petitions Attorney
Office of Petitions

DEP | RAH

DOCKETED
Date 07/10/03
Name/Date 7/11/03

PETITION DECISION

UNITED STATES PATENT AND TRADEMARK OFFICE

Commissioner for Patents
United States Patent and Trademark Office
P.O. Box 1450
Alexandria, VA 22313-1450
www.uspto.gov

MICROSOFT CORPORATION
ONE MICROSOFT WAY
REDMOND WA 98052-6399

COPY MAILED

MAR 2 8 2007

OFFICE OF PETITIONS

ON PETITION

In re Application of
Snover et al.
Application No. 10/413,054
Filed: April 14, 2003

Attorney Docket: 50037.177US01

Title of Invention: System and Method for Persisting Error Information in a Command Line Environment

This is a decision on the petition under 37 CFR 1.137(a) to revive the application filed on February 14, 2007. This petition is properly treated as a petition to withdraw the holding of abandonment under 37 CFR 1.181

The petition to withdraw the holding of abandonment is **GRANTED**.

The petition to revive under 37 CFR 1.137(a) is **DISMISSED AS MOOT**.

This above-identified application became abandoned for failure to timely file a response to a non-final Office Action which was mailed on March 20, 2006. The non-final Office Action set a three (3) month shortened statutory period for reply. No extensions of time were obtained under the provisions of 37 CFR §1.136(a). Accordingly, this application became abandoned on June 21, 2006. A Notice of Abandonment was mailed on October 6, 2006.

Petitioner asserts that the non-final Office action on March 20, 2006 was never received. A review of the record indicates the non-final Office action was mailed to an incorrect correspondence address. A change of correspondence address and statement under 37 CFR 3.73(b) was received in the Office on January 28, 2004. However the change of correspondence address was not entered. Thus the non-final Office action was improperly mailed.

The Notice of Abandonment is hereby vacated and the holding of abandonment is withdrawn.

This application is being forwarded to Art Unit 2114 for re-mailing of the non-final Office Action to the correspondence address of record. The extendable three month time period for reply will be set to run from the mailing date of the new Office Communication.

Telephone inquiries concerning this matter should be directed to the undersigned at (571) 272-3215.

Charlema R. Grant

Charlema R. Grant
Petitions Attorney
Office of Petitions

UNITED STATES PATENT AND TRADEMARK OFFICE

Commissioner for Patents
United States Patent and Trademark Office
P.O. Box 1450
Alexandria, VA 22313-1450
www.uspto.gov

DARBY & DARBY P.C.
P.O. BOX 770
Church Street Station
New York NY 10008-0770

COPY MAILED

SEP 18 2007

OFFICE OF PETITIONS

In re Application of :
BULTHAUP et al. :
Application No. 10/413,071 : ON PETITION
Filed: 04/14/2003 :
Attorney Docket No. 030575-US :

This is in response to the petition under 37 CFR 1.137(b), filed April 10, 2007, to revive the above-identified application.

The present petition contains the typed name of the practitioner; however, it lacks the practitioner's signature in compliance with 37 CFR 1.4(d). The Office notes that each piece of correspondence filed in an application, patent file or other proceeding in the USPTO, which requires a person's signature, must bear one of three types of signatures: (A) handwritten signature; (B) "S-signature;" or (C) Office Electronic Filing System (EFS) character coded signature. See 37 CFR 1.4(d).

As a petition under 37 CFR 1.37(b) requires a person's signature, the Office cannot accept the petition because petitioner failed to comply with the signature requirement. Consequently, the present petition will not be addressed on the merits until petitioner files a "renewed" petition under 37 CFR 1.137(b) signed by an appropriate person in compliance with 37 CFR 1.4(d). No addition fee is required for filing a "renewed" petition.

The "renewed" petition under 37 CFR 1.137(b) must be submitted within TWO (2) MONTHS from the mail date of this decision. Extensions of time under 37 CFR 1.136(a) are permitted. The request should include a cover letter entitled "Renewed Petition under 37 CFR 1.137(b)."

Further correspondence with respect to this matter should be addressed as follows and **to the attention of Senior Petitions Attorney Christina Tartera Donnell:**

By mail: Mail Stop Petition
Commissioner for Patents
P.O. Box 1450
Alexandria, VA 22313-1450

By FAX: (571) 273-8300
Attn: Office of Petitions

By hand: Customer Service Window
Randolph Building
401 Dulany Street
Alexandria, VA 22314

Correspondence may also be submitted electronically to the USPTO.

Telephone inquiries related to this decision may be directed to the undersigned at (571) 272-3211.

Christina Tartera Donnell

Christina Tartera Donnell
Senior Petitions Attorney
Office of Petitions

UNITED STATES PATENT AND TRADEMARK OFFICE

Commissioner for Patents
United States Patent and Trademark Office
P.O. Box 1450
Alexandria, VA 22313-1450
www.uspto.gov

DARBY & DARBY P.C.
P.O. Box 770
Church Street Station
New York NY 10008-0770

COPY MAILED

OCT 17 2007

OFFICE OF PETITIONS

In re Application of	:	
BULTHAUP et al.	:	
Application No. 10/413,071	:	ON PETITION
Filed: 04/14/2003	:	
Attorney Docket No. 030575-US	:	

This is a decision on the petition under the unintentional provisions of 37 CFR 1.137(b), filed October 1, 2007, to revive the above-identified application.

The petition is **DISMISSED**.

Any request for reconsideration of this decision must be submitted within TWO (2) MONTHS from the mail date of this decision. Extensions of time under 37 CFR 1.136(a) are permitted. The reconsideration request should include a cover letter entitled "Renewed Petition under 37 CFR 1.137(b)." This is **not** a final agency action within the meaning of 5 U.S.C. 704.

The application became abandoned for failure to reply in a timely manner to the non-final Office action, mailed April 5, 2004, which set a shortened statutory period for reply of three (3) months. No extensions of time under the provisions of 37 CFR 1.136(a) were obtained. Accordingly, the application became abandoned on July 6, 2004. The Office mailed a Notice of Abandonment on December 9, 2004.

A grantable petition under 37 CFR 1.137(b) must be accompanied by: (1) the required reply, unless previously filed; (2) the petition fee as set forth in 37 CFR 1.17(m); (3) a statement that the entire delay in filing the required reply from the due date for the reply until the filing of a grantable petition pursuant to 37 CFR 1.137(b) was unintentional; and (4) any terminal disclaimer (and fee as set forth in 37 CFR 1.20(d)) required by 37 CFR 1.137(d). Where there is a question as to whether either the abandonment or the delay in filing a petition under 37 CFR 1.137 was unintentional, the Director may require additional information. See MPEP 711.03(c)(II)(C) and (D).

There are three periods to be considered during the evaluation of a petition under 37 CFR 1.137(b):

(1) the delay in reply that originally resulted in the abandonment;

(2) the delay in filing an initial petition pursuant to 37 CFR 1.137(b) to revive the application; and

(3) the delay in filing a grantable petition pursuant to 37 CFR 1.137(b) to revive the application.

In the present petition, petitioner has not shown to the satisfaction of the Director that the delay for periods (1) and (2) was unintentional.

As to Period (1):

The patent statute at 35 U.S.C. 41(a)(7) authorizes the Director to revive an "unintentionally abandoned application." "The legislative history of Public Law 97-247, § 3, 96 Stat. 317 (1982), reveals that the purpose of 35 U.S.C. 41(a)(7) is to permit the Office to have more discretion than in 35 U.S.C. 133 or 151 to revive abandoned applications in appropriate circumstances, but places a limit on this discretion stating that '[u]nder this section a petition accompanied by [the requisite fee] would not be granted where the abandonment or the failure to pay the fee for issuing the patent was intentional as opposed to being unintentional or unavoidable.' H.R. Rep. No. 542, 97th Cong., 2d Sess. 6-7 (1982), reprinted in 1982 U.S.C.C.A.N. 770-71." MPEP 711.03(c)(II)(C)(1). "A delay resulting from a deliberately chosen course of action on the part of the applicant is not an 'unintentional' delay within the meaning of 37 CFR 1.137(b)." Id. The revival of an intentionally abandoned application is antithetical to the meaning and intent of the statute and regulation.

A petition under 37 CFR 1.137(b) must include a statement that the entire delay in filing the required reply from the due date for the reply until the filing of a grantable petition was unintentional. However, the Director reserves the authority to require further information concerning the cause of abandonment and delay in filing a petition to revive where there is a question whether the delay was unintentional. MPEP 711.03(c)(II)(C); 37 CFR 1.137(b)(3). In this instance, there is a question whether the initial delay was unintentional. Thus, petitioner must meet the burden of establishing that the delay was unintentional within the meaning of 35 U.S.C. 41(a)(7) and 37 CFR 1.137(b). See In re Application of G, 11 USPQ2d 1378, 1380 (Comm'r Pats. 1989); 37 CFR 1.137(b). In view of the inordinate delay (over 3 years) in resuming prosecution, there is a question whether the entire delay was unintentional. Petitioner should note that the issue is not whether some of the delay was unintentional by any party, but rather, whether the entire delay has been shown to the satisfaction of the Director to be unintentional.

The question under 37 CFR 1.137(b) for period (1) is whether the delay on the part of the party having the right or authority to reply to avoid abandonment (or not reply) was unintentional. Accordingly, any renewed petition must clearly identify the party having the right to reply to avoid abandonment on July 6, 2004. That party, in turn must explain what effort(s) was made to respond to the outstanding Office action and why no reply was filed. If no effort was made to respond, then that party must explain why

the delay in this application does not result from a deliberate course of action (or inaction). Likewise, as Karl Hormann was the practitioner of record at the time of abandonment,[1] he should explain why this application became abandoned while it was under his control and what efforts he made to reply to the outstanding Office action. Copies of any correspondence relating to the filing (or failure to file) of a reply to the outstanding Office action are required from persons involved with this application at the time of abandonment. Furthermore, petitioner must provide statements from all persons having firsthand knowledge of the circumstances surrounding the lack of a reply to the outstanding Office action. As the courts have made clear, it is pointless for the USPTO to revive a long abandoned application without an adequate showing that the delay did not result from a deliberate course of action. See Lawman Armor Corp. v. Simon, 2005 U.S. Dist. LEXIS 10843, 74 U.S.P.Q.2d (BNA) 1633 (E.D. Mich. Mar. 29, 2005); Field Hybrids, LLC v. Toyota Motor Corp., 2005 U.S. Dist. LEXIS 1159 (D. Minn Jan. 27, 2005); Lumenyte Int'l Corp. v. Cable Lite Corp., Nos. 96-1011, 96-1077, 1996 U.S. App. LEXIS 16400, 1996 WL 383927 (Fed. Cir. July 9, 1996) (unpublished) (patents held unenforceable due to a finding of inequitable conduct in submitting an inappropriate statement that the abandonment was unintentional).

As to Period (2):

Likewise, where an applicant deliberately chooses not to seek or persist in seeking the revival of an abandoned application, or where the applicant deliberately chooses to delay seeking the revival of an abandoned application, the resulting delay in seeking revival of the abandoned application cannot be considered as "unintentional" within the meaning of 37 CFR 1.137(b). See MPEP 711.03(c).

The language of both 35 U.S.C. 41(a)(7) and 37 CFR 1.137(b) is clear and unambiguous. The delay in filing the reply during prosecution, as well as in filing the petition seeking revival, must have been, without qualification, "unintentional" for the reply to be accepted on petition. The Office requires that the entire delay be at least unintentional as a prerequisite to revival of an abandoned application to prevent abuse and injury to the public. See H.R. Rep. No. 542, 97th Cong., 2d Sess. 7 (1982), reprinted in 1982 U.S.C.C.A.N. 771 ("[i]n order to prevent abuse and injury to the public the Commissioner . . . could require applicants to act promptly after becoming aware of the abandonment"). Moreover, where there is a protracted delay in seeking revival, the petitioner must provide a detailed explanation seeking to excuse the delay as opposed to USPTO acceptance of a general allegation of unintentional delay. See Lawman Armor Corp. v. Simon, 2005 U.S. Dist. LEXIS 10843, 74 U.S.P.Q.2d (BNA) 1633, 1637-1638 (E.D. Mich. Mar. 29, 2005); Field Hybrids, LLC v. Toyota Motor Corp., 2005 U.S.

[1] The record indicates that Karl Hormann of Law Offices of Karl Hormann was responsible for prosecution of the application when the reply necessary to avoid abandonment was due. Petitioner did not file a revocation of prior counsel and an appointment of power of attorney of the practitioners at Darby & Darby until October 18, 2006, over two years after the date of abandonment. Therefore, it does not appear that Erik R. Swanson is in a position to have firsthand or direct knowledge of the facts and circumstances of the delay at issue. Accordingly, petitioner must provide a statement from Mr. Hormann explaining why action was not timely taken to prevent the application from becoming abandoned. Petitioner is advised to send a letter (accompanied by a copy of this decision) to Mr. Hormann, by certified or registered mail (return receipt requested) indicating that the U.S. Patent and Trademark Office is requesting assistance in ascertaining the cause of abandonment of the above-identified application, and that the USPTO is requesting that he provide within a specified period (*e.g.*, one month) a statement setting forth why appropriate action was not timely taken to prevent the application from becoming abandoned. Petitioner is advised that, in the event that Mr. Hormann does not provide such a statement, petitioner should submit a copy of such letter and a copy of the return receipt.

Dist. LEXIS 1159 (D. Minn. Jan. 27, 2005) at *21-*23. Statements are required from all persons having firsthand knowledge of the circumstances surrounding the protracted delay, after the abandonment date, in seeking revival.

As noted in MPEP 711.03(c)(II)(D), where a petition under 37 CFR 1.137(b) is not filed within one year of the date of abandonment of the application, petitioner should include (1) the date that the applicant first became aware of the abandonment of the application; and (2) a showing as to how the delay in discovering the abandoned status of the application occurred despite the exercise of due care or diligence on the part of the applicant. In either instance, petitioner's failure to carry the burden of proof to establish that the "entire" delay was "unintentional" may lead to the denial of a petition under 37 CFR 1.137(b), regardless of the circumstances that originally resulted in the abandonment of the application. See also New York Univ. v. Autodesk, Inc., 495 F. Supp. 2d 369, 2007 U.S. Dist. LEXIS 50832 (S.D.N.Y. 2007) (protracted delay in seeking revival undercuts assertion of unintentional delay).

Any renewed petition may be addressed as follows:

By Mail: Mail Stop PETITION
Commissioner for Patents
P. O. Box 1450
Alexandria, VA 22313-1450

By hand: U. S. Patent and Trademark Office
Customer Service Window, Mail Stop Petitions
Randolph Building
401 Dulany Street
Alexandria, VA 22314

By Fax: (571) 273-8300
Attention Office of Petitions

Correspondence regarding this decision may also be filed through the electronic filing system of the USPTO.

Telephone inquiries concerning this decision should be directed to the undersigned at (571) 272-3211.

Christina Tartera Donnell

Christina Tartera Donnell
Senior Petitions Attorney
Office of Petitions

UNITED STATES PATENT AND TRADEMARK OFFICE

Commissioner for Patents
United States Patent and Trademark Office
P.O. Box 1450
Alexandria, VA 22313-1450
www.uspto.gov

DARBY & DARBY P.C.
P.O. Box 770
Church Street Station
New York NY 10008-0770

COPY MAILED

MAY 27 2008

In re Application of	:	
BULTHAUP et al.	:	
Application No. 10/413,071	:	ON PETITION
Filed: 04/14/2003	:	
Attorney Docket No. 030575-US	:	

This is a decision on the renewed petition under the unintentional provisions of 37 CFR 1.137(b), filed April 16, 2008, to revive the above-identified application. Petitioners obtained an extension of time for response within the fourth month. The petition is timely filed.

The petition is **GRANTED**.

The application became abandoned for failure to reply in a timely manner to the non-final Office action, mailed April 5, 2004, which set a shortened statutory period for reply of three (3) months. No extensions of time under the provisions of 37 CFR 1.136(a) were obtained. Accordingly, the application became abandoned on July 6, 2004. The Office mailed a Notice of Abandonment on December 9, 2004.

The petition satisfies the requirements of 37 CFR 1.137(b) in that petitioner has supplied (1) the reply in the form of an amendment, (2) the petition fee, and (3) a proper statement of unintentional delay.

Inquiries concerning this decision should be directed to the undersigned at (571) 272-3211.

This application is being referred to Technology Center AU 3749 for appropriate action by the Examiner in the normal course of business on the reply.

Christina T. Donnell

Christina Tartera Donnell
Senior Petitions Attorney
Office of Petitions

UNITED STATES PATENT AND TRADEMARK OFFICE

Commissioner for Patents
United States Patent and Trademark Office
P.O. Box 1450
Alexandria, VA 22313-1450
www.uspto.gov

WYETH
PATENT LAW GROUP
5 GIRALDA FARMS
MADISON, NJ 07940

COPY MAILED

JUL 15 2005

OFFICE OF PETITIONS

In re Application of	:
Deborah M. Sherman et al	:
Application No. 10/413,076	: DECISION ON PETITIONS
Filed: April 14, 2003	: UNDER 37 CFR §§ 1.313(c)(2
Attorney Docket No. AHP-95011 C2	: AND 1.78(a)(3)

This is a decision on the petition, filed July 12, 2005, under 37 CFR 1.313(c)(2), and supplemented on July 13, 2005, to withdraw the above-identified application from issue after payment of the issue fee. This is also being treated as a petition under 37 CFR 1.78(a)(3) to accept an unintentionally delayed claim under 35 U.S.C. § 120 for the benefit of priority to prior-filed nonprovisional Application No. 10/151,833, filed May 21, 2002, as set forth in the amendment filed July 13, 2005.

The petition under 37 CFR 1.313(c)(2) is **GRANTED**.

The petition under 37 CFR 1.78(a)(3) is **GRANTED**.

As to the Petition under 37 CFR 1.313(c)(2)

The above-identified application is withdrawn from issue for consideration of a submission under 37 CFR 1.114 (request for continued examination). See 37 CFR 1.313(c)(2).

Petitioner is advised that the issue fee paid on June 27, 2005 in the above-identified application cannot be refunded. If, however, the above-identified application is again allowed, petitioner may request that it be applied towards the issue fee required by the new Notice of Allowance.[1]

---

[1] *The request to apply the issue fee to the new Notice may be satisfied by completing and returning the new Issue Fee Transmittal Form PTOL-85(b), which includes the following language thereon: "Commissioner for Patents is requested to apply the Issue Fee and Publication Fee (if any) or re-apply any previously paid issue fee to the application identified above." Petitioner is advised that, whether a fee is indicated as being due or not, the Issue Fee Transmittal Form* ***must*** *be completed and timely submitted to avoid abandonment. Note the language in bold text on the first page of the Notice of Allowance and Fee(s) Due (PTOL-85).*

As to the Petition under 37 CFR 1.78(a)(3)

The instant nonprovisional application was filed after November 29, 2000, and the claim herein for the benefit of priority to prior-filed nonprovisional Application No. 10/151,833 is submitted after expiration of the period specified in 37 CFR 1.78(a)(2)(ii). It is noted that the Application Data Sheet submitted on filing contained a reference to an incorrect application number. As such, a petition and surcharge are now necessary to correct the error.[2] Therefore, this is a proper petition under 37 CFR 1.78(a)(3).

A petition for acceptance of a claim for late priority under 37 CFR 1.78(a)(3) is only applicable to those application filed on or after November 29, 2000. Further, the petition is appropriate only after the expiration of the period specified in 37 CFR 1.78(a)(2)(ii). In addition, the petition under 37 CFR 1.78(a)(3) must be accompanied by:

(1) the reference required by 35 U.S.C. § 120 and 37 CFR 1.78(a)(2)(i) of the prior-filed application, unless previously submitted;
(2) the surcharge set forth in § 1.17(t); and
(3) a statement that the entire delay between the date the claim was due under 37 CFR 1.78(a)(2)(ii) and the date the claim was filed was unintentional. The Commissioner may require additional information where there is a question whether the delay was unintentional.

The petition complies with the requirements for a grantable petition under 37 CFR 1.78(a)(3) in that (1) a reference to the above-noted, prior-filed nonprovisional application has been included in an amendment to the first sentence of the specification following the title, as provided by 37 CFR 1.78(a)(2)(iii); (2) the surcharge fee required by 37 CFR 1.17(t) has been submitted; and (3) the petition contains a proper statement of unintentional delay. Accordingly, having found that the instant petition for acceptance of an unintentionally delayed claim for the benefit of priority under 35 U.S.C. § 120 to the above-noted, prior-filed nonprovisional application satisfies the conditions of 37 CFR 1.78(a)(3), the petition is granted.

---

[2] *See* http://www.uspto.gov/web/offices/dcom/olia/aipa/18monthfaq.htm, item number CX Priority Claims.

The granting of the petition to accept the delayed benefit claim to the prior-filed application under 37 CFR 1.78(a)(3) should not be construed as meaning that the instant application is entitled to the benefit of the prior-filed application. In order for the instant application to be entitled to the benefit of the prior-filed application, all other requirements under 35 U.S.C. § 120 and 37 CFR 1.78(a)(1) and (a)(2) must be met. Similarly, the fact that the corrected Filing Receipt accompanying this decision on petition includes the prior-filed application should not be construed as meaning that applicant is entitled to the claim for benefit of priority to the prior-filed application noted thereon. Accordingly, the examiner will, in due course, consider this benefit claim and determine whether the instant application is entitled to the benefit of the earlier filing date

A corrected Filing Receipt, which includes the priority claim to the prior-filed nonprovisional application, accompanies this decision on petition.

As authorized, the following fees will be assessed to petitioner's deposit account: $130 for the petition to withdraw from issue; $790 for the Request for Continued Examination; and $1,370 for the petition under 37 CFR 1.78(a)(3).

Any inquiries concerning this decision may be directed to the undersigned at (571) 272-3218. All other inquiries concerning either the examination procedures or status of the application should be directed to the Technology Center.

This application is being forwarded to Technology Center Art Unit 1615 for processing the Request for Continued Examination and the submission required by 37 CFR 1.114 (the amendment filed July 13, 2005), including consideration by the examiner of applicant's entitlement to claim benefit of priority under 35 U.S.C. § 120 to prior-filed nonprovisional Application No. 10/151,833, filed May 21, 2002.

Frances Hicks

Frances Hicks
Petitions Examiner
Office of Petitions

ATTACHMENT: Corrected Filing Receipt

UNITED STATES PATENT AND TRADEMARK OFFICE

COMMISSIONER FOR PATENTS
UNITED STATES PATENT AND TRADEMARK OFFICE
P.O. BOX 1450
ALEXANDRIA, VA 22313-1450
www.uspto.gov

Paper No. 6

Lawrence J. Merkel
Meyertons, Hood, Kivlin, Kowert & Goetzel, P.C.
P. O. Box 398
Austin, TX 78767

COPY MAILED

OCT 1 0 2003

OFFICE OF PETITIONS

In re Application of :
Raymond J. Gilstrap, et al. :
Application No.10/413,117 :
Filed: April 14,k 2003 :
Attorney Docket No. 5681-50101 :

ON PETITION

This is in response to the petition under 37 CFR 1.47(a), filed July 14, 2003.

The petition is granted.

Petitioner has shown that the non-signing inventor has refused to join in the filing of the above-identified application.

The above-identified application and papers have been reviewed and found in compliance with 37 CFR 1.47(a). This application is hereby accorded Rule 1.47(a) status.

As provided in 37 CFR 1.47(c), this Office will forward notice of this application's filing to the non-signing inventor at the address given in the petition. Notice of the filing of this application will also be published in the Official Gazette.

The application file is being forwarded to Technology Center 2100 for examination in due course.

Telephone inquiries regarding this decision should be directed to Marianne Morgan at (703) 306-3475.

Frances Hicks

Frances M. Hicks
Lead Petitions Examiner
Office of Petitions
Office of the Deputy Commissioner
for Patent Examination Policy

UNITED STATES PATENT AND TRADEMARK OFFICE

COMMISSIONER FOR PATENTS
UNITED STATES PATENT AND TRADEMARK OFFICE
P.O. BOX 1450
ALEXANDRIA, VA 22313-1450
www.uspto.gov

Mr. Robert Abramovitz
205 Casa Bona Avenue
Belmont, CA 94002

COPY MAILED
OCT 1 0 2003
OFFICE OF PETITIONS

In re Application of
Raymond J. Gilstrap; Emrys Williams; and Robert Abramovitz
Application No. 10/413,117
Filed: April 14, 2003
For: METHOD AND SYSTEM FOR CONFIGURING A COMPUTER SYSTEM USING FIELD REPLACEABLE UNIT IDENTIFICATION INFORMATION

Dear Mr. Abramovitz:

You are named as a joint inventor in the above-identified United States patent application, filed under the provisions of 35 U.S.C. 116 (United States Code), and 37 CFR 1.47(a), Rules of Practice in Patent Cases. Should a patent be granted on the application you will be designated therein as a joint inventor.

As a named inventor you are entitled to inspect any paper in the file wrapper of the application, order copies of all or any part thereof (at a prepaid cost per 37 CFR 1.19) or make your position of record in the application. Alternatively, you may arrange to do any of the preceding through a registered patent attorney or agent presenting written authorization from you. If you care to join the application, counsel of record (see below) would presumably assist you. Joining the application would entail the filing of an appropriate oath or declaration by you pursuant to 37 CFR 1.63.

Telephone inquiries regarding this communication should be directed to Marianne Morgan at (703) 306-3475. Requests for information regarding your application should be directed to the File Information Unit at (703) 308-2733. Information regarding how to pay for and order a copy of the application, or a specific paper in the application, should be directed to the Certification Division at (703) 308-9726 or 1 (800) 972-6382 (outside the Washington, DC area).

Frances Hicks

Frances M. Hicks
Lead Petitions Examiner
Office of Petitions
Office of the Deputy Commissioner
for Patent Examination Policy

cc: Lawrence J. Merkel
Meyertons, Hood, Kivlin, Kowert & Goetzel, P.C.
P. O. Box 398
Austin, TX 78767

UNITED STATES PATENT AND TRADEMARK OFFICE

7-5-07

Commissioner for Patents
United States Patent and Trademark Office
P.O. Box 1450
Alexandria, VA 22313-1450
www.uspto.gov

Patent No. : 7,220,319
Ser. No. : 10/413,136
Inventor(s) : Sago, et. al.
Issued : May 22, 2007
Title : ELECTROSTATIC CHUCKING STAGE AND SUBSTRATE PROCESSING APPARATUS

Re: Request for Certificate of Correction

Consideration has been given your request for the issuance of a certificate of correction for the above-identified patent under the provisions of Rule(s) 1.322 or 1.323.

Assignees' names and addresses (assignment data) printed in a patent, are based *solely* on information supplied in the appropriate space for identifying the assignment data, i.e., item 3 of the Issue Fee Transmittal Form PTOL-85B. Granting of a request under 37 CFR 3.81(b) is required to correct applicant's error providing ***incorrect or erroneous*** assignment data, *before* issuance of a Certificate of Correction, under 37 CFR 1.323 *(see Manual of Patent Examining Procedures (M.P.E.P) Chp.1400, sect. 1481).* This procedure is required *at any time after the issue fee is paid*, including after issuance of the patent.

In view of the foregoing, your request is hereby denied.

A request to correct the Assignee under 37 CFR 3.81(b) should include:

A. **the processing fee set forth in 37 CFR 1.117(h) (currently $130);**
B. a statement that the failure to include the correct assignee name on the PTOL-85B was inadvertent; and
C. a copy of the Notice of Recordation of Assignment Document, reflecting the reel and frame number where the assignment(s) is recorded and/or reflecting proof of *the date* the assignment was submitted for recordation.

In the Request, Applicant(s) may request that the file be forwarded to Certificates of Correction Branch, for issuance of a Certificate of Correction, if the Request is granted.

Any request under 37 CFR 3.81(b) should be directed to the following address or facsimile number:

By mail: Mail Stop PETITIONS
Commissioner for Patents
Post Office Box 1450
Alexandria, VA 22313-1450

By hand: Customer Service Window
Mail Stop Petitions
Randolph Building
401 Dulany Street
Alexandria, VA 22314

By fax: (703) 872-9306
ATTN: Office of Petitions

If a fee (currently $100) was previously submitted for consideration of a Request for Certificate of Correction, under CFR 1.323, to correct assignment data, , no additional fee is required.

Eva James
For Cecelia Newman
Decisions & Certificates
of Correction Branch
(703) **308-9390 ext. 124** or 105

Troy M. Schmelzer
Hogan & Hartson
1999 Avenue of the Stars, Suite 1400
Los Angeles, CA 90067

ej

UNITED STATES PATENT AND TRADEMARK OFFICE

Commissioner for Patents
United States Patent and Trademark Office
P.O. Box 1450
Alexandria, VA 22313-1450
www.uspto.gov

HOGAN & HARTSON L.L.P.
1999 AVENUE OF THE STARS
SUITE 1400
LOS ANGELES CA 90067

COPY MAILED

OCT 3 0 2008

OFFICE OF PETITIONS

In re Patent No. 7,220,319	:	
Application No. 10/413,136	:	
Filed: April 15, 2003	:	ON PETITION
Issued: May 22, 2007	:	
Attorney Docket No. 83393.0006	:	

This is a decision on the petition filed July 25, 2007, which is being treated as a request under 37 CFR 3.81(b)[1] to add the name of the second assignee on the front page of the above-identified patent by way of a Certificate of Correction.

The request is **GRANTED**.

This matter is being referred to the Certificates of Correction Branch for issuance of the requested Certificate of Correction.

Telephone inquiries concerning this decision may be directed to Joan Olszewski at (571) 272-7751. Inquiries regarding the issuance of a certificate of correction should be directed to the Certificate of Correction Branch at (571) 272-4200.

/Liana Walsh/
Liana Walsh
Petitions Examiner
Office of Petitions

[1] *See* MPEP 1309, subsection II; and Official Gazette of June 22, 2004.

PATENT
83393.0006

IN THE UNITED STATES PATENT AND TRADEMARK OFFICE

In re U.S. Patent 7,220,319	Art Unit: 1763
Inventors: SAGO, et al.	Examiner: Kackar, Ram N.
Issued: May 22, 2007	
Appln. No.: 10/413,136	
Filed: April 15, 2003	
For: Electrostatic Chucking Stage and Substrate Processing Apparatus	

10/30/2008 GARIAS 00000013 501314 7220319
01 FC:1808 130.00 DA
02 FC:1811 100.00 DA

REQUEST UNDER 37 CFR 3.81(B) TO CORRECT INCORRECT OR ERRONEOUS ASSIGNMENT DATA

Commissioner for Patents
P.O. Box 1450
Alexandria, VA 22313-1450

Dear Sir:

Request is hereby made for correction of the inadvertently erroneous Assignee information noted on Issue Fee Transmittal filed April 17, 2007. Applicant requests the change from CANON ANELVA CORPORATION, Tokyo (JP) to **Canon Anelva Corporation, Tokyo (JP) and NHK Spring Co., Ltd., Yokohama-shi (JP).** Commissioner is hereby authorized to charge the required fee of $130 to Deposit Account No. 50-1314 in order to complete this request.

A copy of the Notice of Recordation of Assignment Document, reflecting the reel and frame number and proof of recordation date is also provided.

Upon acceptance of this Request, the office is authorized to forward the file to Certificates of Correction Branch.

Adjustment date: 10/30/2008 GARIAS
06/27/2007 INTEFSW 00002717 501314 10413136
01 FC:1811 100.00 CR

Respectfully submitted,

HOGAN & HARTSON L.L.P.

Date: July 25, 2007

By: _____
Dariush G. Adli
Registration No. 51,386
Attorney for Applicant(s)

1999 Avenue of the Stars, Suite 1400
Los Angeles, California 90067
Telephone: 310-785-4600
Facsimile: 310-785-4601

Adjustment date: 10/30/2008 GARIAS
07/25/2007 INTEFSW 00005237 501314 10413136
01 FC:1464 130.00 CR

UNITED STATES PATENT AND TRADEMARK OFFICE

Commissioner for Patents
United States Patent and Trademark Office
P.O. Box 1450
Alexandria, VA 22313-1450
www.uspto.gov

Antonelli, Terry, Stout & Kraus, LLP
1300 North Seventeenth Street
Suite 1800
Arlington, VA 22209-3873

COPY MAILED
OCT 1 0 2006
OFFICE OF PETITIONS

In re Application of Morioka et al. Application No. 10/413,141 Filed: April 15, 2003 Attorney Docket No. 501.42579X00	DECISION ON PETITION UNDER 37 CFR 1.78(a)(3)

This is a decision on the petition under 37 CFR 1.78(a)(3), filed January 13, 2006, to accept an unintentionally delayed claim under 35 U.S.C. § 120 for the benefit of priority to the prior-filed nonprovisional application set forth in the amendment filed with the petition.

The petition is **DISMISSED**.

A petition for acceptance of a claim for late priority under 37 CFR 1.78(a)(3) is only applicable to those applications filed on or after November 29, 2000. Further, the petition is appropriate only after the expiration of the period specified in 37 CFR 1.78(a)(2)(ii). In addition, the petition under 37 CFR 1.78(a)(3) must be accompanied by:

(1) the reference required by 35 U.S.C. § 120 and 37 CFR 1.78(a)(2)(i) of the prior-filed application, unless previously submitted;
(2) the surcharge set forth in § 1.17(t); and
(3) a statement that the entire delay between the date the claim was due under 37 CFR 1.78(a)(2)(ii) and the date the claim was filed was unintentional. The Commissioner may require additional information where there is a question whether the delay was unintentional.

The petition does not satisfy item (1) above.

The reference to add the prior-filed application on page one following the first sentence of the specification is not acceptable as drafted because it improperly incorporates by reference the prior-filed application. An incorporation by reference statement added after an application's filing date is not effective because no new matter can be added to an application after its filing

date (*see* 35 U.S.C. § 132(a)). If an incorporation by reference statement is included in an amendment to the specification to add a benefit claim under 35 U.S.C. § 120 after the filing date of the application, the amendment would not be proper. When a benefit claim under 35 U.S.C. § 120 is submitted after the filing of an application, the reference to the prior application cannot include an incorporation by reference statement of the prior application. *See* Dart Industries v. Banner, 636 F.2d 684, 207 USPQ 273 (C.A.D.C. 1980). *Note* MPEP §§ 201.06(c) and 608.04(b).

Before the petition under 37 CFR § 1.78(a)(3) can be granted, a renewed petition and either an Application Data Sheet (37 CFR 1.76(a)(5)) or a proper amendment (complying with the provisions of 37 CFR 1.121) to correct the above matters are required.

Further correspondence with respect to this matter should be addressed as follows:

By mail: Mail Stop PETITIONS
Commissioner for Patents
Post Office Box 1450
Alexandria, VA 22313-1450

By hand: Customer Service Window
Mail Stop Petitions
Randolph Building
401 Dulany Street
Alexandria, VA 22314

By fax: (571) 273-8300
ATTN: Office of Petitions

Any questions concerning this matter may be directed to the undersigned at (571) 272-3211.

Christina Tartera Donnell

Christina Tartera Donnell
Senior Petitions Attorney
Office of Petitions

UNITED STATES PATENT AND TRADEMARK OFFICE

Commissioner for Patents
United States Patent and Trademark Office
P.O. Box 1450
Alexandria, VA 22313-1450
www.uspto.gov

Antonelli, Terry, Stout & Kraus, LLP
1300 North Seventeenth Street
Suite 1800
Arlington, VA 22209-3873

COPY MAILED

FEB 2 6 2007

OFFICE OF PETITIONS

In re Application of Morioka et al. Application No. 10/413,141 Filed: April 15, 2003 Attorney Docket No. 501.42579X00	DECISION ON PETITION UNDER 37 CFR 1.78(a)(3)

This is a decision on the renewed petition under 37 CFR 1.78(a)(3), filed December 11, 2006, and resubmitted on January 19, 2007, to accept an unintentionally delayed claim under 35 U.S.C. § 120 for the benefit of priority to the prior-filed nonprovisional application set forth in the amendment filed with the petition.

The petition is **GRANTED**.

A petition for acceptance of a claim for late priority under 37 CFR 1.78(a)(3) is only applicable to those applications filed on or after November 29, 2000. Further, the petition is appropriate only after the expiration of the period specified in 37 CFR 1.78(a)(2)(ii). In addition, the petition under 37 CFR 1.78(a)(3) must be accompanied by:

(1) the reference required by 35 U.S.C. § 120 and 37 CFR 1.78(a)(2)(i) of the prior-filed application, unless previously submitted;

(2) the surcharge set forth in § 1.17(t); and

(3) a statement that the entire delay between the date the claim was due under 37 CFR 1.78(a)(2)(ii) and the date the claim was filed was unintentional. The Director may require additional information where there is a question whether the delay was unintentional.

All of the above requirements having been satisfied, the late claim for priority under 35 U.S.C. § 120 is accepted as being unintentionally delayed.

The granting of the petition to accept the delayed benefit claim to the prior-filed application under 37 CFR 1.78(a)(3) should not be construed as meaning that this application is entitled to the benefit of the prior-filed application. In order for this application to be entitled to the benefit of the prior-filed application, all other requirements under 35 U.S.C. § 120 and 37 CFR 1.78(a)(1) and (a)(2) must be met. Similarly, the fact that the corrected Filing Receipt accompanying this decision on petition includes the prior-filed application should not be construed as meaning that applicant is entitled to the claim for benefit of priority to the prior-filed application noted thereon. Accordingly, the examiner will, in due course, consider this benefit claim and determine whether the application is entitled to the benefit of the earlier filing date.

A corrected Filing Receipt, which includes the priority claim to the prior-filed nonprovisional application, accompanies this decision on petition.

Any inquiries concerning this decision may be directed to the undersigned at (571) 272-3211. All other inquiries concerning either the examination procedures or status of the application should be directed to the Technology Center.

This matter is being referred to Technology Center Art Unit 1763 for consideration by the examiner of applicant's entitlement to claim benefit of priority under 35 U.S.C. § 120 to the prior-filed application.

Christina Tartera Donnell

Christina Tartera Donnell
Senior Petitions Attorney
Office of Petitions

ATTACHMENT: Corrected Filing Receipt

UNITED STATES PATENT AND TRADEMARK OFFICE

UNITED STATES DEPARTMENT OF COMMERCE
United States Patent and Trademark Office
Address: COMMISSIONER FOR PATENTS
P.O. Box 1450
Alexandria, Virginia 22313-1450
www.uspto.gov

APPL NO.	FILING OR 371 (c) DATE	ART UNIT	FIL FEE REC'D	ATTY.DOCKET NO	DRAWINGS	TOT CLMS	IND CLMS
10/413,141	04/15/2003	1763	1300	501.42579X00	14	8	8

CONFIRMATION NO. 4099

CORRECTED FILING RECEIPT

OC000000022654415

20457
ANTONELLI, TERRY, STOUT & KRAUS, LLP
1300 NORTH SEVENTEENTH STREET
SUITE 1800
ARLINGTON, VA 22209-3873

Date Mailed: 02/26/2007

Receipt is acknowledged of this regular Patent Application. It will be considered in its order and you will be notified as to the results of the examination. Be sure to provide the U.S. APPLICATION NUMBER, FILING DATE, NAME OF APPLICANT, and TITLE OF INVENTION when inquiring about this application. Fees transmitted by check or draft are subject to collection. Please verify the accuracy of the data presented on this receipt. **If an error is noted on this Filing Receipt, please mail to the Commissioner for Patents P.O. Box 1450 Alexandria Va 22313-1450. Please provide a copy of this Filing Receipt with the changes noted thereon. If you received a "Notice to File Missing Parts" for this application, please submit any corrections to this Filing Receipt with your reply to the Notice. When the USPTO processes the reply to the Notice, the USPTO will generate another Filing Receipt incorporating the requested corrections (if appropriate).**

Applicant(s)

Natsuyo Morioka, Tokyo, JAPAN;
Kenji Tamaki, Yokohama, JAPAN;
Akira Kagoshima, Kudamatsu, JAPAN;
Daisuke Shiraishi, Kudamatsu, JAPAN;
Motohiko Yoshigai, Hikari, JAPAN;
Junichi Tanaka, Tsuchiura, JAPAN;
Shoji Ikuhara, Hikari, JAPAN;
Hideyuki Yamamoto, Kudamatsu, JAPAN;

Power of Attorney:

David Terry--20178
Donald Antonelli--20296
Melvin Kraus--22466
James Dresser--22973
Donald Stout--26422
Gregory Montone--28141
William Solomon--28565
Carl Brundidge--29621
Alan Schiavelli--32087

Domestic Priority data as claimed by applicant

This application is a CIP of 09/946,503 09/06/2001 PAT 6,733,618

Foreign Applications

JAPAN 2002-282164 09/27/2002

If Required, Foreign Filing License Granted: 06/13/2003

The country code and number of your priority application, to be used for filing abroad under the Paris Convention, is
US10/413,141

Projected Publication Date: Not Applicable

Non-Publication Request: No

Early Publication Request: No

Title

Etching system and etching method

Preliminary Class

156

PROTECTING YOUR INVENTION OUTSIDE THE UNITED STATES

Since the rights granted by a U.S. patent extend only throughout the territory of the United States and have no effect in a foreign country, an inventor who wishes patent protection in another country must apply for a patent in a specific country or in regional patent offices. Applicants may wish to consider the filing of an international application under the Patent Cooperation Treaty (PCT). An international (PCT) application generally has the same effect as a regular national patent application in each PCT-member country. The PCT process **simplifies** the filing of patent applications on the same invention in member countries, but **does not result** in a grant of "an international patent" and does not eliminate the need of applicants to file additional documents and fees in countries where patent protection is desired.

Almost every country has its own patent law, and a person desiring a patent in a particular country must make an application for patent in that country in accordance with its particular laws. Since the laws of many countries differ in various respects from the patent law of the United States, applicants are advised to seek guidance from specific foreign countries to ensure that patent rights are not lost prematurely.

Applicants also are advised that in the case of inventions made in the United States, the Director of the USPTO must issue a license before applicants can apply for a patent in a foreign country. The filing of a U.S. patent application serves as a request for a foreign filing license. The application's filing receipt contains further information and guidance as to the status of applicant's license for foreign filing.

Applicants may wish to consult the USPTO booklet, "General Information Concerning Patents" (specifically, the section entitled "Treaties and Foreign Patents") for more information on timeframes and deadlines for filing foreign patent applications. The guide is available either by contacting the USPTO Contact Center at 800-786-9199, or it can be viewed on the USPTO website at http://www.uspto.gov/web/offices/pac/doc/general/index.html.

For information on preventing theft of your intellectual property (patents, trademarks and copyrights), you may wish to consult the U.S. Government website, http://www.stopfakes.gov. Part of a Department of Commerce initiative, this website includes self-help "toolkits" giving innovators guidance on how to protect intellectual property in specific countries such as China, Korea and Mexico. For questions regarding patent enforcement issues, applicants may call the U.S. Government hotline at 1-866-999-HALT (1-866-999-4158).

LICENSE FOR FOREIGN FILING UNDER
Title 35, United States Code, Section 184
Title 37, Code of Federal Regulations, 5.11 & 5.15

GRANTED

The applicant has been granted a license under 35 U.S.C. 184, if the phrase "IF REQUIRED, FOREIGN FILING LICENSE GRANTED" followed by a date appears on this form. Such licenses are issued in all applications where the conditions for issuance of a license have been met, regardless of whether or not a license may be required as set forth in 37 CFR 5.15. The scope and limitations of this license are set forth in 37 CFR 5.15(a) unless an earlier license has been issued under 37 CFR 5.15 (b). The license is subject to revocation upon written notification. The date indicated is the effective date of the license, unless an earlier license of similar scope has been granted under 37 CFR 5.13 or 5.14.

This license is to be retained by the licensee and may be used at any time on or after the effective date thereof unless it is

revoked. This license is automatically transferred to any related applications(s) filed under 37 CFR 1.53(d). This license is not retroactive.

The grant of a license does not in any way lessen the responsibility of a licensee for the security of the subject matter as imposed by any Government contract or the provisions of existing laws relating to espionage and the national security or the export of technical data. Licensees should apprise themselves of current regulations especially with respect to certain countries, of other agencies, particularly the Office of Defense Trade Controls, Department of State (with respect to Arms, Munitions and Implements of War (22 CFR 121-128)); the Bureau of Industry and Security, Department of Commerce (15 CFR parts 730-774); the Office of Foreign Assets Control, Department of Treasury (31 CFR Parts 500+) and the Department of Energy.

NOT GRANTED

No license under 35 U.S.C. 184 has been granted at this time, if the phrase "IF REQUIRED, FOREIGN FILING LICENSE GRANTED" DOES NOT appear on this form. Applicant may still petition for a license under 37 CFR 5.12, if a license is desired before the expiration of 6 months from the filing date of the application. If 6 months has lapsed from the filing date of this application and the licensee has not received any indication of a secrecy order under 35 U.S.C. 181, the licensee may foreign file the application pursuant to 37 CFR 5.15(b).

SPE RESPONSE FOR CERTIFICATE OF CORRECTION

Paper No.: _____

DATE : Oct. 8, 2008

TO SPE OF : ART UNIT 2853

SUBJECT : Request for Certificate of Correction for Appl. No.: 10/413144 /6896345

Please respond to this request for a certificate of correction within 7 days.

FOR IFW FILES:

Please review the requested changes/corrections as shown in the **COCIN** document(s) in the IFW application image. No new matter should be introduced, nor should the scope or meaning of the claims be changed.

Please complete the response (see below) and forward the completed response to scanning using document code **COCX**.

FOR PAPER FILES:

Please review the requested changes/corrections as shown in the attached certificate of correction. Please complete this form (see below) and forward it with the file to:

Certificates of Correction Branch (CofC)
South Tower - 9A22
Palm Location 7580

Magdalene Talley
Certificates of Correction Branch
703-308-9390 ext. 116

Thank You For Your Assistance

The request for issuing the above-identified correction(s) is hereby:
Note your decision on the appropriate box.

- ☒ **Approved** — **All** changes apply.
- ☐ **Approved in Part** — Specify below which changes **do not** apply.
- ☐ **Denied** — State the reasons for denial below.

Comments: _____

STEPHEN MEIER
SUPERVISORY PATENT EXAMINER

UNITED STATES PATENT AND TRADEMARK OFFICE

Commissioner for Patents
United States Patent and Trademark Office
P.O. Box 1450
Alexandria, VA 22313-1450
www.uspto.gov

E I DU PONT DE NEMOURS AND COMPANY
LEGAL PATENT RECORDS CENTER
BARLEY MILL PLAZA 25/1128
4417 LANCASTER PIKE
WILMINGTON DE 19805

COPY MAILED

SEP 21 2007

OFFICE OF PETITIONS

In re Application of
Reichert et al.
Application No. 10/413,184
Filed: April 14, 2003
Title: Treated Gas Diffusion Backings and Their Use in Fuel Cells

ON PETITION

This is a decision on the petition under 37 CFR 1.137(b), filed October 27, 2006, to revive the above-identified application.

This above-identified application became abandoned for failure to timely file a complete reply to the non-final Office Action of November 25, 2005. An amendment was filed on March 24, 2004. In response to the amendment a Notice of Non-Compliant Amendment (37 CFR 1.121) was mailed on March 30, 2006 which set an extendable reply period of one month. A timely reply to the Notice of Non-Compliant Amendment was not received. This application became abandoned on May 1, 2006. A Notice of Abandonment was mailed on October 17, 2006.

This petition is hereby **Granted**.

Pursuant to petitioner's request deposit account no. 04-1928 will be charged the $1500.00 petition fee.

The office hereby acknowledges the receipt of the Amendment submitted with the instant petition.

This application is being referred to Art Unit 1745 for further processing.

Telephone inquiries concerning this matter should be directed to the undersigned at (571) 272-3215.

Charlema R. Grant

Charlema R. Grant
Petitions Attorney
Office of Petitions

DATE _____ APPLICATION NUMBER 10/413,194

DOC CODE PG.DEC.PUBS DOC DATE _____

DELIVER THE ATTACHED FIFLE/DOCUMENT TO THE TC SCANNING CENTER

CONTRACTOR: THE ATTACHED FILE/DOCUMENT MUST BE INDEXED AND SCANNED INTO IFW WITHIN **8** WORK HOURS; UPLOADING OF THE SCANNED IMAGES SHOULD OCCUR NO LATER THAN **16** WORK HOURS FOLLOWING RECEIPT OF THIS REQUEST

AFTER SCANNING, ORIGINAL DOCUMENTS SHOULD BE BOXED IN ACCORDANCE WITH INSTRUCTIONS

UNITED STATES PATENT AND TRADEMARK OFFICE

Commissioner for Patents
United States Patent and Trademark Office
P.O. Box 1450
Alexandria, VA 22313-1450
www.uspto.gov

FLIESLER MEYER LLP
650 CALIFORNIA STREET
14TH FLOOR
SAN FRANCISCO CA 94108

COPY MAILED

SEP 17 2007

OFFICE OF PETITIONS

In re Patent No. 7,066,311	:	
Issue Date: February 28, 2006	:	
Application No. 10/413,194	:	DECISION ON PETITION
Filed: April 14, 2003	:	
Attorney Docket No. PANAP-01046US8	:	

This is a decision on the petition under 37 CFR 1.182, filed February 28, 2007, requesting issuance of a duplicate Letters Patent for the above-identified patent.

The petition is **GRANTED**.

The Publishing Division is directed to issue a duplicate Letters Patent.

As authorized, the $400 fee for the petition under 37 CFR 1.182 has been assessed to petitioner's deposit account.

Telephone inquiries concerning this decision may be directed to the undersigned at (571) 272-3230. Inquiries regarding the issuance of a duplicate Letters Patent may be directed to Krystal Paige in the Publishing Division at (703) 308-9250, Ext. 139.

A copy of this decision is being faxed to Publishing Division for issuance of a duplicate Letters Patent.

Shirene Willis Brantley
Senior Petitions Attorney
Office of Petitions

cc: Krystal Paige, South Tower, 8th Floor, Room C32 (Fax No. (571) 270-9937)

UNITED STATES PATENT AND TRADEMARK OFFICE

Commissioner for Patents
United States Patent and Trademark Office
P.O. Box 1450
Alexandria, VA 22313-1450
www.uspto.gov

FLIESLER MEYER LLP
650 CALIFORNIA STREET
14TH FLOOR
SAN FRANCISCO CA 94108

COPY MAILED

AUG 15 2008

In re Patent No. 7,006,311	:	
Issue Date: February 28, 2006	:	
Application No. 10/413,194	:	CORRECTED DECISION ON PETITION
Filed: April 14, 2003	:	
Attorney Docket No. PANAP-01046US8	:	

This is a corrected decision on the petition under 37 CFR 1.182, filed February 28, 2007, requesting issuance of a duplicate Letters Patent for the above-identified patent. The decision is required because the original decision on petition, mailed September 17, 2007, listed the correct application number, but an incorrect patent number. This resulted in petitioner receiving a duplicate Letters Patent for an incorrect patent. Petitioner has stated that the incorrect patent is being returned to the Office.

The petition is **GRANTED**.

The Publishing Division is directed to issue a duplicate Letters Patent for Patent No. 7,006,311.

Telephone inquiries concerning this decision may be directed to the undersigned at (571) 272-3230. Inquiries regarding the issuance of a duplicate Letters Patent may be directed to Niomi Farmer in the Office of Data Management at (703) 308-9250, Ext. 129.

A copy of this decision is being faxed to the Office of Data Management for issuance of a duplicate Letters Patent.

Shirene Willis Brantley

Shirene Willis Brantley
Senior Petitions Attorney
Office of Petitions

cc: Ms. Niomi Farmer, Office of Data Management, Fax: 571-270-9753.

UNITED STATES PATENT AND TRADEMARK OFFICE

Commissioner for Patents
United States Patent and Trademark Office
P.O. Box 1450
Alexandria, VA 22313-1450
www.uspto.gov

AGILENT TECHNOLOGIES, INC.
LEGAL DEPARTMENT, DL429
INTELLECTUAL PROPERTY ADMINISTRATION
P.O. BOX 7599
LOVELAND CO 80537-0599

COPY MAILED

JUL 1 6 2004

OFFICE OF PETITIONS

In re Application of
Marvin Glenn Wong :
Application No. 10/413,195 : ON PETITION
Filed: April 14, 2003 :
Attorney Docket No. 10010572-1 :

This is a decision on the petition filed July 6, 2004, requesting withdrawal of the above-identified application from issue after payment of the issue fee.

The petition is **DISMISSED as moot.**

Unfortunately, the petition did not reach the appropriate official for decision within sufficient time to avert issuance of the application into a patent. Petitioner's attention is directed to 37 CFR 1.313(d), which states:

> A petition under this section will not be effective to withdraw the application from issue unless it is actually received and granted by the appropriate officials **before the date of issue.** Withdrawal of an application from issue after payment of the issue fee may not be effective to avoid publication of application information.

The information disclosure statement (IDS) has been placed in the file of the above-identified application without further consideration. See 37 CFR 1.97(l).

Telephone inquiries should be directed to the undersigned at (703) 305-8859.

The patented file is being referred to Files Repository.

Karen Creasy

Karen Creasy
Petitions Examiner
Office of Petitions
Office of the Deputy Commissioner
for Patent Examination Policy

UNITED STATES PATENT AND TRADEMARK OFFICE

Commissioner for Patents
United States Patent and Trademark Office
P.O. Box 1450
Alexandria, VA 22313-1450
www.uspto.gov

LEXMARK INTERNATIONAL, INC.
INTELLECTUAL PROPERTY LAW DEPARTMENT
740 WEST NEW CIRCLE ROAD
BLDG. 082-1
LEXINGTON, KY 40550-0999

COPY MAILED

JUL 15 2008

OFFICE OF PETITIONS

In re Application of Bailey :
Application No. 10/413,201 : Decision on Petition
Filing Date: April 13, 2003 :
Attorney Docket No. 2002-0707.02 :

This is a decision on the petition under 37 CFR 1.137(a), filed April 14, 2008, to revive the above-identified application.

The petition is **DISMISSED**.

Any request for reconsideration must be submitted within TWO (2) MONTHS from the mail date of this decision. No further petition fee is required for the request. Extensions of time under 37 CFR 1.136(a) are permitted. The reconsideration request should include a cover letter entitled "Renewed Petition under 37 CFR 1.137(a)."

Procedural History:

The Office mailed a Notice of Allowance on September 10, 2007. The Notice required submission of the issue fee and publication. The Notice of Allowance set a period for reply of three (3) months.

The Office did not receive a reply to the Notice of Allowance. As a result, the Office deemed the application to have become abandoned as of December 11, 2007, and mailed a Notice of Abandonment on January 9, 2008.

The instant petition asserts the Notice of Allowance was never received.

Discussion:

In the absence of any irregularity in the mailing of the Office action, there is a strong presumption that the Office action was properly mailed and delivered to the address of record. In order to overcome this presumption, a petition alleging non-receipt of an Office action must:

(1) include a statement from practitioner stating that the Office action was not received,

(2) attest that a search of the file jacket has been made,
(3) attest that a search of all relevant docket records has been made,
(4) include a copy of the docket record where the Office action would have been entered had it been received, and
(5) include any additional information which may be required by the Commissioner.

See MPEP 711.03(c)(I).

The instant petition does not include item (4) above. Petitioner should file a request for reconsideration and a printed copy of any docket records where the Notice of Allowance would have been entered if it had been received.

Further correspondence with respect to this matter should be addressed as follows:

By mail: Mail Stop Petition
Commissioner for Patents
P.O. Box 1450
Alexandria, VA 22313-1450

By facsimile: (571) 273-8300
Attn: Office of Petitions

Telephone inquiries regarding this communication should be directed to Petitions Attorney Steven Brantley at (571) 272-3203.

Charles Steven Brantley
Senior Petitions Attorney
Office of Petitions

UNITED STATES PATENT AND TRADEMARK OFFICE

Commissioner for Patents
United States Patent and Trademark Office
P.O. Box 1450
Alexandria, VA 22313-1450
www.uspto.gov

LEXMARK INTERNATIONAL, INC.
INTELLECTUAL PROPERTY LAW DEPARTMENT
740 WEST NEW CIRCLE ROAD
BLDG. 082-1
LEXINGTON, KY 40550-0999

COPY MAILED
OCT 29 2008
OFFICE OF PETITIONS

In re Application of Bailey	:	
Application No. 10/413,201	:	Decision on Petition
Filing Date: April 13, 2003	:	
Attorney Docket No. 2002-0707.02	:	

This is a decision on the petition under 37 CFR 1.137(a), filed August 19, 2008, to revive the above-identified application.

The petition is **granted**.

The Office mailed a Notice of Allowance on September 10, 2007. The Notice required submission of the issue fee and publication fee. The Notice of Allowance set a period for reply of three (3) months.

The Office did not receive a reply to the Notice of Allowance. As a result, the Office deemed the application to have become abandoned as of December 11, 2007, and mailed a Notice of Abandonment on January 9, 2008.

The instant petition asserts the Notice of Allowance was never received.

Upon consideration of the entire record, the Office is persuaded petitioner never received the Notice of Allowance. Therefore, the petition is granted and the application revived.

The Patent Publication Branch (PUBS) of the Office of Data Management will be informed of the instant decision. Thereafter, PUBS will contact the examiner to determine if entry of the amendment filed April 14, 2008, is appropriate.

Telephone inquiries regarding this communication should be directed to Petitions Attorney Steven Brantley at (571) 272-3203.

Charles Steven Brantley
Senior Petitions Attorney
Office of Petitions

MAR 18 2004

Michelle E. O'Brien
FINNEGAN, HENDERSON, FARABOW
GARRETT & DUNNER, LLP
1300 I Street, NW
Washington, D.C. 20005-3315

In re Application of	:	
Mohamed KANJI	:	
Serial No. 10/413,217	:	DECISION ON PETITION
Filing Date: April 15, 2003	:	
Attorney Docket No.: 5725.0895-01	:	

This is in response to applicant's "Petition to Make Special under 37 CFR 1.102(d) and MPEP 708.02, (II)" filed February 27, 2004.

A review of the petition shows that requirements of MPEP 708.02 have been met. Accordingly, the petition is granted. There is no provision for "withdrawal" from this special status.

Petition Granted.

Should there be any questions with regard to this letter please contact Cecilia Tsang by letter addressed to the Director, technology center 1600, P.O. Box 1450, Alexandria, VA 22313-1450, or by telephone at 571-272-0562 or by facsimile transmission to the Office general facsimile number.

Cecilia Tsang

Cecilia Tsang
Special Program Examiner, TC1600

UNITED STATES
PATENT AND
TRADEMARK OFFICE

UNDER SECRETARY OF COMMERCE FOR INTELLECTUAL PROPERTY AND
DIRECTOR OF THE UNITED STATES PATENT AND TRADEMARK OFFICE
P.O. Box 1450
Alexandria, VA. 22313-1450
WWW.USPTO.GOV

Paper No.

Michelle E. O'Brien
Finnegan, Henderson, Farabow
Garrett & Dunner
1300 I Street N.W.
Washington D.C. 2000

Date: July 21, 2005
Application No. 10/413,217
Filed: April 15, 2003
Subject: **METHODS OF USE AND OF MAKING MASCARA COMPRISING AT LEAST ONE COLORING AGENT AND AT LEAST ONE POLYAMIDE POLYMER CHOSEN FROM ETHYLENEDIAMINE/STEARYL DIMER TALLATE COPOLYMER**

ON PETITION
37 CFR 1.48(b)

Receipt is acknowledged of the petitions filed June 22, 2005, under 37 CFR 1.48(b) for correction of inventorship. The petition has been **GRANTED**.

In view of the papers filed, it has been found that this non-provisional application, as filed, through error and without deceptive intent, improperly set forth the Inventorship, and accordingly, this application has been changed by the **deletion of SUE FENG**. The application will be forwarded to the Office of Initial Patent Examination (OIPE) for issuance of a corrected filing receipt, and correction of the file jacket and PTO PALM data to reflect the inventorship as corrected.

JYOTHSNA VENKAT
United States Patent and Trademark Office
Technology Center 1600
PRIMARY EXAMINER, ART UNIT 1615
Remsen 4A89
571-272-0607

UNITED STATES PATENT AND TRADEMARK OFFICE

Commissioner for Patents
United States Patent and Trademark Office
P.O. Box 1450
Alexandria, VA 22313-1450
www.uspto.gov

FINNEGAN HENDERSON FARABOW GARRETT
& DUNNER LLP
901 NEW YORK AVENUE NW
WASHINGTON DC 20001-4413

COPY MAILED
DEC 19 2006
OFFICE OF PETITIONS

In re Patent No. 7,008,619	:	DECISION ON
Mohamed G. Kanji	:	PATENT TERM ADJUSTMENT
Issue Date: March 7, 2006	:	AND
Application No. 10/413,217	:	NOTICE OF INTENT
Filed: April 15, 2003	:	TO ISSUE
Attorney Docket No. 5725.0895-01	:	CERTIFICATE OF CORRECTION

This is a decision on the "APPLICATION FOR PATENT TERM ADJUSTMENT - POST GRANT", filed May 5, 2006. Patentee requests that the patent term adjustment indicated on the patent be corrected from one hundred nine (109) to one hundred fifty-six (156) days.

The petition is **GRANTED** to the extent indicated herein.

The patent term adjustment indicated on the patent is to be corrected by issuance of a certificate of correction showing a revised Patent Term Adjustment of **one hundred fifty-five (155)** days.

On March 7, 2006, the above-identified application matured into U.S. Patent No. 7,008,619. The instant request for reconsideration filed May 5, 2006 was timely filed within two months of the date the patent issued. See § 1.705(d). Patentee states that the instant patent is subject to a terminal disclaimer.

The Office determined a patent term adjustment of one hundred nine (109) days based on an adjustment for PTO delay of eighty-six (86) days pursuant to 35 U.S.C. 154(b)(1)(A)(i) and 37 C.F.R. § 1.703(a)(1), and one hundred thirty-six (136) days pursuant to 35 U.S.C. 154(b)(1)(A)(iv) and 37 C.F.R. 1.703(a)(6), reduced by Applicant's delays of thirty-six (36) and seventy-seven (77) days both pursuant to 35 U.S.C. 154(b)(2)(C)(i) and 37 C.F.R. § 1.704(c)(10). The adjustments of thirty-six (36) and seventy-seven (77) days are at issue.

The Notice of Allowance was mailed on March 23, 2005. On May 17, 2005, Applicant filed a Rule 312 Amendment, together with an IDS. On June 22, 2005, Applicant filed another supplemental IDS. The Office responded to both the May 17, 2005 and June 22, 2005 filings by mailing an action on July 22, 2005. Accordingly, pursuant to 37 C.F.R. 1.704(c)(10), Applicant should have been assessed sixty-seven (67) days of delay, sixty-seven (67) days being the number of days "beginning on the date the amendment under § 1.312 or other paper was filed and ending on the mailing date of the Office action or notice in response to the amendment under § 1.312 or such other paper". While the Office did mail a Supplemental Notice of Allowability on September 6, 2005, Applicant should not have been assessed any delay for its mailing, as the July 22, 2005 Office action was responsive to Applicant's May 17, 2005 Rule 312 Amendment and IDS, as well as Applicant's June 22, 2005 supplemental IDS.

In view thereof, the correct determination of PTA is one hundred fifty-five (155) days (222 (86+136) days of PTO delay, reduced by 67 days of applicant delay).

Receipt of the $200.00 fee set forth in 37 C.F.R. § 1.18(e) is acknowledged.

The application file is being forwarded to the Certificates of Correction Branch for issuance of a certificate of correction in order to rectify the error regarding the patent term information. See 35 U.S.C. § 254 and 37 C.F.R. § 1.322. The certificate of correction will indicate that the term of the above-identified patent is extended or adjusted by **one hundred fifty-five (155)** days, subject to any disclaimers.

Telephone inquiries specific to this matter should be directed to Cliff Congo, Petitions Attorney, at (571)272-3207.

Kery Fries

Kery Fries
Senior Legal Advisor
Office of Patent Legal Administration
Office of Deputy Commissioner
for Patent Examination Policy

Enc: draft certificate of correction

Day : Monday
Date: 8/21/2006

PALM INTRANET

Time: 09:43:15

PTA Calculations for Application: 10/413217			
Application Filing Date:	04/15/2003	PTO Delay (PTO):	222
Issue Date of Patent:	03/07/2006	Three Years:	0
Pre-Issue Petitions:	0	Applicant Delay (APPL):	113
Post-Issue Petitions:	0	Total PTA (days):	155
PTO Delay Adjustment:	46		

File Contents History

Number	Date	Contents Description	PTO	APPL	START
64	08/21/2006	ADJUSTMENT OF PTA CALCULATION BY PTO	46		
59	03/07/2006	PATENT ISSUE DATE USED IN PTA CALCULATION	136		55
58	01/27/2006	RECEIPT INTO PUBS			
57	01/26/2006	DISPATCH TO FDC			
56	01/26/2006	APPLICATION IS CONSIDERED READY FOR ISSUE			
55	06/22/2005	ISSUE FEE PAYMENT VERIFIED			
54	01/19/2006	RECEIPT INTO PUBS			
53	01/06/2006	RECEIPT INTO PUBS			
52	11/10/2005	WORKFLOW - QUERY REQUEST - FINISH			
51	11/09/2005	WORKFLOW - QUERY REQUEST - FINISH			
50	09/27/2005	TC RETURN TO PUBS			
49	09/06/2005	MAIL MISCELLANEOUS COMMUNICATION TO APPLICANT			
48	09/02/2005	MISCELLANEOUS COMMUNICATION TO APPLICANT - NO ACTION COUNT			
47	08/22/2005	WORKFLOW - QUERY REQUEST - BEGIN			
46	07/22/2005	MAIL RESPONSE TO 312 AMENDMENT (PTO-271)			
45	07/20/2005	RESPONSE TO AMENDMENT UNDER RULE 312			
44	06/22/2005	MISCELLANEOUS INCOMING LETTER		77	49
43	06/22/2005	REFERENCE CAPTURE ON IDS			
42	06/22/2005	INFORMATION DISCLOSURE STATEMENT (IDS) FILED		0	49
41	05/17/2005	REFERENCE CAPTURE ON IDS			
40	05/17/2005	INFORMATION DISCLOSURE STATEMENT (IDS) FILED		36	49

39	05/17/2005	AMENDMENT AFTER NOTICE OF ALLOWANCE (RULE 312)		0	46
38	06/22/2005	ISSUE FEE PAYMENT RECEIVED			
37	05/03/2005	WORKFLOW - FILE SENT TO CONTRACTOR			
36	03/30/2005	EXPORT TO INITIAL DATA CAPTURE			
35	04/01/2005	RECEIPT INTO PUBS			
34	03/23/2005	MAIL NOTICE OF ALLOWANCE			
33	03/23/2005	MAIL EXAMINER INTERVIEW SUMMARY (PTOL - 413)			
32	03/21/2005	ISSUE REVISION COMPLETED			
31	03/21/2005	NOTICE OF ALLOWANCE DATA VERIFICATION COMPLETED			
30	03/17/2005	EXAMINER INTERVIEW SUMMARY RECORD (PTOL - 413)			
29	03/21/2005	NOTICE OF ALLOWABILITY			
28	01/04/2005	DATE FORWARDED TO EXAMINER			
27	12/09/2004	RESPONSE AFTER NON-FINAL ACTION			
26	12/09/2004	WORKFLOW INCOMING AMENDMENT IFW			
25	09/02/2004	REFERENCE CAPTURE ON IDS			
24	09/02/2004	INFORMATION DISCLOSURE STATEMENT (IDS) FILED			
23	09/09/2004	MAIL PARALEGAL TD ACCEPTED			
22	09/09/2004	MAIL NON-FINAL REJECTION	86		-1
21	09/07/2004	NON-FINAL REJECTION			
20	09/01/2004	PARALEGAL TD ACCEPTED			
19	06/01/2004	INFORMATION DISCLOSURE STATEMENT (IDS) FILED			
18	08/19/2004	CASE DOCKETED TO EXAMINER IN GAU			
17	07/23/2004	MISCELLANEOUS INCOMING LETTER			
16	07/09/2004	INFORMATION DISCLOSURE STATEMENT (IDS) FILED			
15	05/04/2004	MISCELLANEOUS INCOMING LETTER			
14	03/17/2004	PETITION DECISION - GRANTED			
13	02/27/2004	PETITION ENTERED			
12	12/17/2003	REFERENCE CAPTURE ON IDS			
11	11/04/2003	INFORMATION DISCLOSURE STATEMENT (IDS) FILED			
10	11/04/2003	IFW TSS PROCESSING BY TECH CENTER COMPLETE			
9	04/15/2003	CLAIMS PTO			

8	04/15/2003	PRELIMINARY AMENDMENT			
7	11/03/2003	IFW TSS PROCESSING BY TECH CENTER COMPLETE			
6	04/15/2003	PRELIMINARY AMENDMENT			
5	08/07/2003	CASE DOCKETED TO EXAMINER IN GAU			
4	07/15/2003	APPLICATION DISPATCHED FROM OIPE			
3	07/15/2003	APPLICATION IS NOW COMPLETE			
2	04/30/2003	IFW SCAN & PACR AUTO SECURITY REVIEW			
1	04/15/2003	INITIAL EXAM TEAM NN			

Search Another: Application# Search

EXPLANATION OF PTA CALCULATION

EXPLANATION OF PTE CALCULATION

To go back use Back button on your browser toolbar.

Back to PALM | ASSIGNMENT | OASIS | Home page

UNITED STATES PATENT AND TRADEMARK OFFICE

DRAFT CERTIFICATE OF CORRECTION

PATENT : 7,008,619 B2

DATED : March 7, 2006

INVENTOR(S) : Mohamed G. Kanji

It is certified that error appears in the above-identified patent and that said Letters Patent is hereby corrected as shown below:

On the cover page,

[*] Notice: Subject to any disclaimer, the term of this patent is extended or adjusted under 35 USC 154(b) by (109) days

Delete the phrase "by 109 days" and insert – by 155 days—

UNITED STATES PATENT AND TRADEMARK OFFICE

COMMISSIONER FOR PATENTS
UNITED STATES PATENT AND TRADEMARK OFFICE
P.O. BOX 1450
ALEXANDRIA, VA 22313-1450
www.uspto.gov

Paper No. 4

EDWARD D GRIEFF
HALE & DORR LLP
1455 PENNSYLVANIA AVE, NW
WASHINGTON, DC 20004

COPY MAILED

AUG 1 2 2003

OFFICE OF PETITIONS

In re Application of	:
Stamler and Loscalzo	: DECISION REFUSING
Application No. 10/413,220	: STATUS UNDER
Filed: April 15, 2003	: 37 CFR 1.47(a) AND DISMISSING
Attorney Docket No. 102258.262 US2	: PETITIONS UNDER 37 CFR 1.183
For: Nitrosated and Nitrosylated Heme Proteins	: AND 37 CFR 1.48

This is a decision on the petitions under 37 CFR 1.47(a), 37 CFR 1.183, and 37 CFR 1.48.

The two petitions under 37 CFR 1.47(a) are **dismissed**.

The petition under 37 CFR 1.183 is **dismissed**.

The petition under 37 CFR 1.48 is **dismissed**.

Any request for reconsideration of this decision must be submitted within TWO (2) MONTHS from the mail date of this decision. Extensions of time under 37 CFR 1.136(a) are permitted. **Failure to respond will result in abandonment of the application.**

Facts:

The instant application is a divisional application of application no. 09/835,038 which is a divisional application of application no. 09/092,622.

The application is accompanied by papers which appear to be copies of papers previously filed in application no. 09/092,622.

These papers include three separate declarations. The first declaration lists two inventors (Stamler and Loscalzo) and is only signed by Loscalzo. The date of the signature is March 25, 1999. The second declaration lists three inventors (Stamler, Loscalzo, and Singler). The second declaration is only signed by Loscalzo and fails to list addresses for Stamler or Singler. The third declaration lists all three inventors and is signed by Loscalzo and signed on behalf of Stamler and Singler by an Industry Agreement Associate for the assignee.

The papers include a petition under 37 CFR 1.47(a) to accept a declaration without the signature of inventor Singler.

The papers include a petition under 37 CFR 1.48 to delete Singler as an inventor.

The papers include a petition under 37 CFR 1.47(a) to accept a declaration without the signature of inventor Stamler.

The papers include a petition under 37 CFR 1.183 to waive 37 CFR 1.48 insofar as the rule requires a signed statement by Singler.

Analysis:

The instant application is a divisional application.

When a divisional application is filed, and one wants to delete an inventor, one has several options. In this case, one could simply file a declaration listing only Stamler and Loscalzo. A copy of such a declaration has been filed which is directed to application no. 09/092,622. Since the instant application contains no new matter, the declaration can be filed for the instant application.

The inventorship for the instant application is determined by the declaration filed for the instant application and not necessarily by the inventorship of prior applications.

If the declaration entered in the instant application was the declaration listing only inventors Stamler and Loscalzo, then Singler would not be entered as an inventor and petitions under 37 CFR 1.48 and 37 CFR 1.183 would be unnecessary. Even if Singler were listed as an inventor in the declaration entered by the Office, petitions under 37 CFR 1.48 and 37 CFR 1.183 would be unnecessary. 37 CFR 1.63(d)(2) provides that a mere statement in the continuation application requesting the deletion of the inventor is sufficient to delete the inventor.

The Office cannot enter all three declarations as original declarations. Petitioner must inform the Office which of the three declarations should be entered. Petitioner may wish to have the declaration listing only Stamler and Loscalzo entered if Singler is not an inventor for the instant application.

If petitioner requests that the Office enter the declaration only listing Stamler and Loscalzo, then the Office will give full consideration to the petition under 37 CFR 1.47(a) which requests that the declaration be entered without the signature of Stamler.

At this time, the Office is choosing not to charge petition fees for the four petitions. If petitioner requests reconsideration and chooses the declaration listing only Stamler and Loscalzo then the Office will charge $130 for the petition under 37 CFR 1.47(a) related to Stamler and will not give further consideration to the other petitions which will thereafter be moot.

In order to expedite consideration, petitioner may wish to submit the renewed petition by facsimile transmission to the telephone number indicated below and to the attention of the undersigned.

Further correspondence with respect to this matter should be addressed as follows:

By mail: Mail Stop Petition
Commissioner for Patents
P.O. Box 1450
Alexandria, VA 22313-1450

By facsimile: (703) 308-6916
Attn: Office of Petitions

Telephone inquiries should be directed to Petitions Attorney Steven Brantley at (703) 306-5683.

Charles Steven Brantley
Petitions Attorney
Office of Petitions

UNITED STATES PATENT AND TRADEMARK OFFICE

COMMISSIONER FOR PATENTS
UNITED STATES PATENT AND TRADEMARK OFFICE
P.O. BOX 1450
ALEXANDRIA, VA 22313-1450
www.uspto.gov

Paper No. 6

EDWARD D GRIEFF
HALE & DORR LLP
1455 PENNSYLVANIA AVE, NW
WASHINGTON, DC 20004

COPY MAILED

OCT 0 3 2003

OFFICE OF PETITIONS

In re Application of	:
Stamler and Loscalzo	: DECISION ACCORDING
Application No. 10/413,220	: STATUS UNDER
Filed: April 15, 2003	: 37 CFR 1.47(a)
Attorney Docket No. 102258.262 US2	:
For: Nitrosated and Nitrosylated Heme Proteins	:

This is in response to the petition under 37 CFR 1.47(a) filed August 22, 2002.

The petition is granted.

Petitioner has shown that the non-signing inventor, Stamler, has refused to join in the filing of the above-identified application after having been presented with the application papers.

The above-identified application and papers have been reviewed and found in compliance with 37 CFR 1.47(a). This application is hereby accorded Rule 1.47(a) status.

As provided in Rule 1.47(c), this Office will forward notice of this application's filing to the non-signing inventor at the address given in the petition. Notice of the filing of this application will also be published in the Official Gazette.

After this decision is mailed, the above-identified application will be returned to the Office of Initial Patent Examination for further processing.

Telephone inquiries should be directed to Petitions Attorney Steven Brantley at (703) 306-5683.

Charles Steven Brantley
Petitions Attorney
Office of Petitions

UNITED STATES PATENT AND TRADEMARK OFFICE

Commissioner for Patents
United States Patent and Trademark Office
P.O. Box 1450
Alexandria, VA 22313-1450
www.uspto.gov

January 25, 2005

In re Application of	:	
Roger W. Phillips et al.	:	NOTICE OF WITHDRAWAL
Serial No. 10/413,253	:	FROM ISSUE
Filed: April 14, 2003	:	UNDER 37 CFR 1.313(b)
For: TITANIUM-CONTAINING INTERFERENCE:		
PIGMENTS AND FOILS WITH COLOR	:	
SHIFTING PROPERTIES	:	

The above-identified application is withdrawn from issue after payment of the issue fee due to reopening of prosecution. See 37 CFR 1.313 (b).

The above-identified application is hereby withdrawn from issue.

The issue fee is refundable upon written request. If, however, the application is again found allowable, the issue fee can be applied toward payment of the issue fee in the amount identified on the new Notice of Allowance and Issue Fee Due upon written request. This request and any balance due must be received on or before the due date noted in the new Notice of Allowance in order to prevent abandonment of the application.

Telephone inquiries should be directed to Milton Cano at (571) 272-1398.

The above-identified application is being forwarded to the examiner for prompt appropriate action, including notifying applicant of the new status of this application.

Jacqueline M. Stone

Jacqueline Stone, Director
Technology Center 1700
Chemical and Materials Engineering

WORKMAN, NYDEGGER (F/K/A WORKMAN NYDEGGER
& SEELEY)
60 East South Temple
1000 Eagle Gate Tower
Salt Lake City, UT 84111

cc: Allowed Files—Pk3-910

SPE RESPONSE FOR CERTIFICATE OF CORRECTION

Paper No.:20080623

DATE : June 23, 2008

TO SPE OF : ART UNIT 2624

SUBJECT : Request for Certificate of Correction on Patent No.: 7283686

A response is requested with respect to the accompanying request for a certificate of correction.

Please complete this form and return with file, within 7 days to:
Certificates of Correction Branch - ST (South Tower) 9A22
Palm location **7590** - Tel. No. (703) 305-8309

With respect to the change(s) requested, correcting Office and/or Applicant's errors, should the patent read as shown in the certificate of correction? No new matter should be introduced nor should the scope or meaning of the claims be changed.

Thank You For Your Assistance **Certificates of Correction Branch**

The request for issuing the above-identified correction(s) is hereby:

Note your decision on the appropriated box.

- ☒ **Approved** — All changes apply.
- ☐ **Approved in Part** — Specify below which changes **do not** apply.
- ☐ **Denied** — State the reasons for denial below.

Comments:

SPE: /Brian Werner/ Art Unit 2624

PAGE 3/3 * RCVD AT 7/3/2008 7:12:48 AM [Eastern Daylight Time] * SVR:USPTO-EFXRF-4/14 * DNIS:2709990 * CSID:703 3088792 * DURATION (mm-ss):02-54

SPE RESPONSE FOR CERTIFICATE OF CORRECTION

Paper No.:20080623

DATE : June 23, 2008

TO SPE OF : ART UNIT 2624

SUBJECT : Request for Certificate of Correction on Patent No.: 7283686

A response is requested with respect to the accompanying request for a certificate of correction.

Please complete this form and return with file, within **7** days to:
Certificates of Correction Branch - ST (South Tower) 9A22
Palm location **7590** - Tel. No. (703) 305-8309

With respect to the change(s) requested, correcting Office and/or Applicant's errors, should the patent read as shown in the certificate of correction? No new matter should be introduced, nor should the scope or meaning of the claims be changed.

Thank You For Your Assistance **Certificates of Correction Branch**

The request for issuing the above-identified correction(s) is hereby:

Note your decision on the appropriated box.

☒ **Approved** All changes apply.

☐ **Approved in Part** Specify below which changes **do not** apply.

☐ **Denied** State the reasons for denial below.

Comments:

SPE: /Brian Werner/ Art Unit 2624

UNITED STATES PATENT AND TRADEMARK OFFICE

Commissioner for Patents
United States Patent and Trademark Office
P.O. Box 1450
Alexandria, VA 22313-1450
www.uspto.gov

OBLON SPIVAK MCCLELLAND
MAIER & NEUSTADT, P.C.
1940 DUKE STREET
ALEXANDRIA, VA 22314

COPY MAILED

APR 19 2005

OFFICE OF PETITIONS

ON PETITION

In re Application of :
Dai Nakajima et al :
Application No. 10/413,288 :
Filed: April 15, 2003 :
Attorney Docket No. 236581US2

This is a decision on the petition, filed April 18, 2005, under 37 CFR 1.313(c)(2) to withdraw the above-identified application from issue after payment of the issue fee.

The petition is **GRANTED**.

The above-identified application is withdrawn from issue for consideration of a submission under 37 CFR 1.114 (request for continued examination). See 37 CFR 1.313(c)(2).

Petitioner is advised that the issue fee paid on March 4, 2005 in the above-identified application cannot be refunded. If, however, the above-identified application is again allowed, petitioner may request that it be applied towards the issue fee required by the new Notice of Allowance.[1]

Telephone inquiries should be directed to Irvin Dingle at (571) 272-3210.

This matter will be forwarded to Technology Center AU 2814 for processing of the request for continued examination under 37 CFR 1.114 and for consideration of the concurrently filed Information Disclosure Statement.

Irvin Dingle
Petitions Examiner
Office of Petitions
Office of the Deputy Commissioner
for Patent Examination Policy

---

[1] The request to apply the issue fee to the new Notice may be satisfied by completing and returning the new Issue Fee Transmittal Form PTOL-85(b), which includes the following language thereon: Commissioner for Patents is requested to apply the Issue Fee and Publication Fee (if any) or re-apply any previously paid issue fee to the application identified above. Petitioner is advised that, whether a fee is indicated as being due or not, the Issue Fee Transmittal Form **must** be completed and timely submitted to avoid abandonment. Note the language in bold text on the first page of the Notice of Allowance and Fee(s) Due (PTOL-85).

UNITED STATES PATENT AND TRADEMARK OFFICE

Commissioner for Patents
United States Patent and Trademark Office
P.O. Box 1450
Alexandria, VA 22313-1450
www.uspto.gov

FITZPATRICK CELLA HARPER & SCINTO
30 ROCKEFELLER PLAZA
NEW YORK, NY 10112

COPY MAILED
SEP 2 6 2008

In re Patent No. 7,034,821	:	
Application No. 10/413,290	:	
Filed: April 15, 2003	:	ON PETITION
Issued: April 25, 2006	:	
Attorney Docket No. 01263.020274.	:	

This is a decision on the petition filed July 19, 2006, which is being treated as a request under 37 CFR 3.81(b)[1] to correct the name of the assignee on the front page of the above-identified patent by way of a Certificate of Correction.

The request is **GRANTED**.

This matter is being referred to the Certificates of Correction Branch for issuance of the requested Certificate of Correction.

Telephone inquiries concerning this decision may be directed to Joan Olszewski at (571) 272-7751. Inquiries regarding the issuance of a certificate of correction should be directed to the Certificate of Correction Branch at (571) 272-4200.

/Liana Walsh/
Liana Walsh
Petitions Examiner
Office of Petitions

[1] *See* MPEP 1309, subsection II; and Official Gazette of June 22, 2004.

SPE RESPONSE FOR CERTIFICATE OF CORRECTION

Paper No.: _____

DATE : 5/18/2005

TO SPE OF : ART UNIT **2800**

SUBJECT : Request for Certificate of Correction on Patent No.: **6,877,878**

A response is requested with respect to the accompanying request for a certificate of correction.

Please complete this form and return with file, within **7** days to:
Certificates of Correction Branch - PK 3-922
Palm location **7580** - Tel. No. 305-8309

With respect to the change(s) requested, correcting Office and/or Applicant's errors, should the patent read as shown in the certificate of correction? No new matter should be introduced, nor should the scope or meaning of the claims be changed.

Are items under (56) Foreign Documents and Other Publications okay to delete?

Ernest C. White, LIE305-8339

Thank You For Your Assistance — **Certificates of Correction Branch**

The request for issuing the above-identified correction(s) is hereby:
Note your decision on the appropriate box.

- ☐ **Approved** — **All** changes apply.
- ☑ **Approved in Part** — Specify below which changes **do not** apply.
- ☐ **Denied** — State the reasons for denial below.

Comments:

FOREIGN DOCUMENTS + OTHER PUBLICATIONS SHOULD NOT BE REMOVED, THEY WERE SUBMITTED UNDER AN IDS BY APPLICANT ON 1-2-2004.

Sandra O'Shea
Supervisory Patent Examiner
Technology Center 2800

SPE — **Art Unit** 2875

US006877878B2

(12) **United States Patent**
Raskas

(10) **Patent No.: US 6,877,878 B2**
(45) **Date of Patent: Apr. 12, 2005**

(54) **FLASHLIGHT AND VIDEO RECORDER DEVICE**

(76) Inventor: **Eric J. Raskas**, 541 Mapleview Dr., St. Louis, MO (US) 63130

(*) Notice: Subject to any disclaimer, the term of this patent is extended or adjusted under 35 U.S.C. 154(b) by 0 days.

(21) Appl. No.: **10/413,327**

(22) Filed: **Apr. 14, 2003**

(65) **Prior Publication Data**

US 2004/0201989 A1 Oct. 14, 2004

(51) **Int. Cl.**[7] **F21V 33/00**
(52) **U.S. Cl.** **362/253**; 362/8; 362/202
(58) **Field of Search** 362/8, 11, 13, 362/202, 205, 253

(56) **References Cited**

U.S. PATENT DOCUMENTS

4,635,123	A		1/1987	Masunaga et al.	358/213
4,676,619	A	*	6/1987	Woolley	396/432
4,989,093	A	*	1/1991	Kaneko	348/224.1
5,305,033	A		4/1994	Takahashi et al.	354/76
5,446,599	A	*	8/1995	Lemelson	386/118
5,520,544	A	*	5/1996	Manico et al.	434/317
5,793,419	A		8/1998	Fraley	348/143
5,931,562	A		8/1999	Arato	362/184
6,022,117	A	*	2/2000	Tenmyo et al.	362/17
6,078,752	A	*	6/2000	Tenmyo	396/176
6,286,973	B1		9/2001	Thrower	362/86
6,439,432	B1		8/2002	Park	222/113
6,443,587	B2		9/2002	Thrower	362/86
6,488,390	B1	*	12/2002	Lebens et al.	362/231
6,510,338	B1	*	1/2003	Irion et al.	600/476
2002/0006037	A1		1/2002	Thrower	
2003/0002274	A1		1/2003	Thrower	

FOREIGN PATENT DOCUMENTS

EP	0593836	A1	10/1992
FR	24 18539	A	9/1979
FR	2458138	A1	10/1980
FR	2667396		9/1990
JP	63-276838		5/1987
JP	01-294317		5/1988
JP	08-125487	A	5/1996
WO	WO 99/46624	A1	9/1999

SUBMITTED BY APPLICANT

OTHER PUBLICATIONS

Bhedwar, Homi C. et al. "Ceramic Multilayer Package Fabrication", Electronic Materials Handbook, Nov. 1989, pp. 460–469, vol. 1 Packaging, Section 4: Packages.

"Integral Power Resistors for Aluminum Substrate." IBM Technical Disclosure Bulletin, Jun. 1984, US, Jun. 1, 1984, p. 827, vol. 27, No. 1B, TDB–ACC–NO: NB8406827, Cross Reference: 0018–8689–27–1B–827.

Kim, Joonwon et al. "A Micromechanical Switch with Electrostatically Driven Liquid–Metal Droplet." Sensors and Actuators, A: Physical. v 9798, Apr. 1, 2002, 4 pages.

* cited by examiner

Primary Examiner—John Anthony Ward
(74) *Attorney, Agent, or Firm*—Polster, Lieder, Woodruff & Lucchesi, L.C.

(57) **ABSTRACT**

A flashlight and video recorder device is disclosed which comprises an illumination portion for producing a beam of light, a video recorder for recording video images, a casing for housing the illumination portion and the video recorder, and a lens guide for preventing light from the illumination portion from affecting any of the video images.

20 Claims, 5 Drawing Sheets

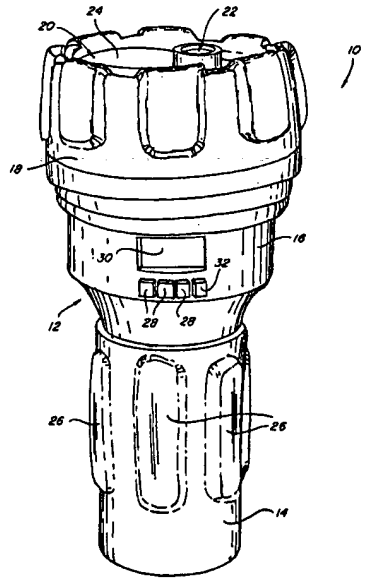

UNITED STATES PATENT AND TRADEMARK OFFICE
CERTIFICATE OF CORRECTION

PATENT NO : US 6,877,878 B2
DATED : April 12, 2005
INVENTOR(S) : Eric J. Raskas

It is certified that error appears in the above-identified patent and that said Letters Patent are hereby corrected as shown below:

On the first page of the patent under the headings FOREIGN PATENT DOCUMENTS and OTHER PUBLICATIONS, delete all references as such references were never cited by the Examiner during the prosecution of the application. DONT AGREE WERE GIVEN AN IDS

Col. 8, Line 12
After "images" insert a comma OK

MAILING ADDRESS OF SENDER:
David H. Chervitz
Polster, Lieder, Woodruff & Lucchesi, L.C.
12412 Powerscourt Drive, Suite 200
St. Louis, MO 63131

PATENT NO. US 6,877,878 B2

No. of additional copies 0

David H. Chervitz, Reg. No. 32,820

This collection of information is required by 37 CFR 1.322, 1.323, and 1.324. The information is required to obtain or retain a benefit by the public which is to file (and by the USPTO to possess) an application. Confidentiality is governed by 35 U.S.C. 122 and 37 CFR 1.14. This collection is estimated to take 1.0 hour to complete, including gathering, preparing, and submtiting the completed application form to the USPTO. Time will vary depending upon the individual case. Any comments on the amount of time you require to complete this form and/or suggestions for reducing this burden, should be sent to the Chief Information Officer, U.S. Patent and Trademark Office, U.S. Department of Commerce, P.O. Box 1450, Alexandria, VA 22313-1450. DO NOT SEND FEES OR COMPLETED FORMS TO THIS ADDRESS. **SEND TO: Commissioner for Patents, P.O. Box 1450, Alexandria, VA 22313-1450.**

If you need assistance in completing the form, call 1-800-PTO-9199 and select option 2.

UNITED STATES PATENT AND TRADEMARK OFFICE
CERTIFICATE OF CORRECTION

PATENT NO : US 6,877,878 B2
DATED : April 12, 2005
INVENTOR(S) : Eric J. Raskas

It is certified that error appears in the above-identified patent and that said Letters Patent are hereby corrected as shown below:

On the first page of the patent under the headings FOREIGN PATENT DOCUMENTS and OTHER PUBLICATIONS, delete all references as such references were never cited by the Examiner during the prosecution of the application.

Col. 8, Line 12
After "images" insert a comma

MAILING ADDRESS OF SENDER:
David H. Chervitz
Polster, Lieder, Woodruff & Lucchesi, L.C.
12412 Powerscourt Drive, Suite 200
St. Louis, MO 63131

PATENT NO. US 6,877,878 B2

No. of additional copies 0

David H. Chervitz, Reg. No. 32,820

This collection of information is required by 37 CFR 1.322, 1.323, and 1.324. The information is required to obtain or retain a benefit by the public which is to file (and by the USPTO to possess) an application. Confidentiality is governed by 35 U.S.C. 122 and 37 CFR 1.14. This collection is estimated to take 1.0 hour to complete, including gathering, preparing, and submtiting the completed application form to the USPTO. Time will vary depending upon the individual case. Any comments on the amount of time you require to complete this form and/or suggestions for reducing this burden, should be sent to the Chief Information Officer, U.S. Patent and Trademark Office, U.S. Department of Commerce, P.O. Box 1450, Alexandria, VA 22313-1450. DO NOT SEND FEES OR COMPLETED FORMS TO THIS ADDRESS. **SEND TO: Commissioner for Patents, P.O. Box 1450, Alexandria, VA 22313-1450.**

If you need assistance in completing the form, call 1-800-PTO-9199 and select option 2.

UNITED STATES PATENT AND TRADEMARK OFFICE

Commissioner for Patents
United States Patent and Trademark Office
P.O. Box 1450
Alexandria, VA 22313-1450
www.uspto.gov

ADAMS & WILKS
17 BATTERY PLACE
SUITE 1231
NEW YORK, NY 10004

COPY MAILED

DEC 17 2007

OFFICE OF PETITIONS

In re Patent No. 7,090,409 :
Issue Date: August 15, 2006 :
Application No. 10/413,353 : NOTICE
Filed: April 14, 2003 :
Attorney Docket No. S004-5021

This is a notice regarding your request for acceptance of a fee deficiency submission under 37 CFR 1.28. On September 1, 1998, the Court of Appeals for the Federal Circuit held that 37 CFR 1.28(c) is the sole provision governing the time for correction of the erroneous payment of the issue fee as a small entity. **See DH Technology v. Synergystex International, Inc. 154 F.3d 1333, 47 USPQ2d 1865 (Fed. Cir. Sept. 1, 1998).**

The Office no longer investigates or rejects original or reissue applications under 37 CFR 1.56. **1098 Off. Gaz. Pat. Office 502 (January 3, 1989)**. Therefore, nothing in this Notice is intended to imply that an investigation was done.

Your fee deficiency submission under 37 CFR 1.28 is hereby **ACCEPTED**.

Inquiries related to this communication should be directed to Irvin Dingle at (571) 272-3210.

Irvin Dingle
Petitions Examiner
Office of Petitions

UNITED STATES PATENT AND TRADEMARK OFFICE

COMMISSIONER FOR PATENTS
UNITED STATES PATENT AND TRADEMARK OFFICE
P.O. BOX 1450
ALEXANDRIA, VA 22313-1450
www.uspto.gov

SIM & MCBURNEY
330 UNIVERSITY AVENUE
6TH FLOOR
TORONTO ON M5G 1R7 CA CANADA

COPY MAILED

AUG 14 2006

OFFICE OF PETITIONS

In re Application of	:
Logie, et al.	: DECISION ON PETITION
Application No. 10/413,371	:
Filed: April 15, 2003	:
Atty. Dkt. No.: 7865-67 MIS	:

This is a decision on the petition under 37 CFR 1.137(b), filed June 30, 2006, to revive the above-identified application.

This application was held abandoned for failure to timely file a proper reply to the Office communication mailed January 30, 2006. The Office communication set a one-month (or 30 days, whichever is long) shortened statutory period of time for reply. A reply was filed April 4, 2006, however, it was not accompanied by an extension of time in accordance with 37 CFR 1.136(a). A Notice of Abandonment was mailed June 1, 2006.

The Office communication mailed January 30, 2006 set a one-month (or 30 day, whichever is long) shortened statutory period of time for reply. The Office communication provided that extensions of time were available under 37 CFR 1.136 and further provided that no reply could be timely filed after six months from the mailed date of the Office communication. Thus, a reply to the Office communication was due on or before March 2, 2006 (or 30 days from the mail date of the Office communication). The period of time for reply was, however, extendible up to five months from the mailed date of the Office communication, meaning a reply, accompanied by a proper petition for extension of time (and required fee) could be timely filed up to July 30, 2006.

The instant petition was filed June 30, 2006, which is within the period of time extendible for reply. Accordingly, the instant reply requires a four-month extension of time. Petitioner has submitted a petition for revival fee of $1,500.00 and a petition for extension of time fee of 1,020.00. A four-month extension of time is currently $1,590.00. Thus, petitioner, having submitted $2,520.00, is entitled to a refund of $930.00.

As petitioner has not expressly authorized remission of any excess fees, petitioner is entitled to request a refund by writing to the Finance Office, Refund Branch. A copy of this decision should accompany any request for refund.

Accordingly, the holding of abandonment, having been prematurely rendered, is hereby **WITHDRAWN**; the Notice of Abandonment is hereby **VACATED**; the petition under 37 CFR 1.137(b) is **DISMISSED AS MOOT**, and, the petition for a four month extension of time is hereby **GRANTED**.

This application is being forwarded to Technology Center 1600 for further processing.

Telephone inquiries concerning this matter may be directed to the undersigned at (571) 272-3205.

Alesia M. Brown
Petitions Attorney
Office of Petitions

SPE A. Grimley

SPE RESPONSE FOR CERTIFICATE OF CORRECTION 10/413,379

Paper No.: _____

DATE : 8/5/05

TO SPE OF : ART UNIT 2852

SUBJECT : Request for Certificate of Correction on Patent No.: 6882814

A response is requested with respect to the accompanying request for a certificate of correction.

Please complete this form and return with file, within 7 days to:
Palm location **7580, Certificates of Correction Branch – South Tower – 9A22**
If response is for an IFW, **return to employee (named below) via PUBSCofC Team in MADRAS.**
With respect to the change(s) requested, correcting Office and/or Applicant's errors, should the patent read as shown in the certificate of correction (COCIN)? No new matter should be introduced, nor should the scope or meaning of the claims be changed.

Lamonte M. Newsome

Thank You For Your Assistance

Certificates of Correction Branch
Tel. No. 703-305-8309

The request for issuing the above-identified correction(s) is hereby:
Note your decision on the appropriate box.

- ☑ **Approved** — **All** changes apply.
- ☐ **Approved in Part** — Specify below which changes **do not** apply.
- ☐ **Denied** — State the reasons for denial below.

Comments:

for Art Grimley

SPE 2863 **Art Unit**

PTOL-306 (REV. 7/03) U.S. DEPARTMENT OF COMMERCE Patent and Trademark Office

SPE A. Grimley

SPE RESPONSE FOR CERTIFICATE OF CORRECTION 10/413,379

Paper No.: _____

DATE : 8/5/05

TO SPE OF : ART UNIT 2852

SUBJECT : Request for Certificate of Correction on Patent No.: 6882814

A response is requested with respect to the accompanying request for a certificate of correction.

Please complete this form and return with file, within 7 days to:
Palm location **7580, Certificates of Correction Branch – South Tower – 9A22**
If response is for an IFW, **return to employee (named below) via PUBSCofC Team in MADRAS.**
With respect to the change(s) requested, correcting Office and/or Applicant's errors, should the patent read as shown in the certificate of correction (COCIN)? No new matter should be introduced, nor should the scope or meaning of the claims be changed.

Lamonte M. Newsome

Thank You For Your Assistance

Certificates of Correction Branch
Tel. No. 703-305-8309

The request for issuing the above-identified correction(s) is hereby:
Note your decision on the appropriate box.

- [x] **Approved** — **All** changes apply.
- [ ] **Approved in Part** — Specify below which changes **do not** apply.
- [ ] **Denied** — State the reasons for denial below.

Comments:

_____

_____

_____

_____

_____

SPE — 2852 Art Unit

UNITED STATES PATENT AND TRADEMARK OFFICE

Commissioner for Patents
United States Patent and Trademark Office
P.O. Box 1450
Alexandria, VA 22313-1450
www.uspto.gov

COPY MAILED
NOV 0 2 2006
OFFICE OF PETITIONS

THE WEBB LAW FIRM, P.C.
700 KOPPERS BUILDING
436 SEVENTH AVENUE
PITTSBURGH, PA 15219

In re Application of Siegfried et al. :
Application No. 10/413,411 : Decision on Petition
Filing Date: April 14, 2003 :
Attorney Docket No. 0115-030530 :

This is a decision on the petition under 37 CFR 1.137(a), filed July 31, 2006, to revive the application. The petition is filed in the alternative under 37 CFR 1.137(b).

The petition under 37 CFR 1.137(a) is **dismissed**.

The petition under 37 CFR 1.137(b) is **granted**.

Facts:

A final Office action was mailed January 20, 2006.

An amendment was filed March 20, 2006.

Petitioner spoke with the examiner of record on July 20, 2006.

The examiner indicated his docket was backlogged and he would try to get to the matter as soon as possible.

Petitioner asked if a RCE needed to be filed in order to avoid abandonment of the application due to the statutory six-month deadline falling on July 20, 2006.

Petitioner states the examiner assured petitioner nothing needed be filed under the circumstances.

Petitioner did not file a RCE, or other papers, on July 20, 2006.

Petitioner states the examiner called petitioner on July 21, 2006, to inform petitioner the examiner had been incorrect during the prior day's discussion. Petitioner states the examiner agreed to note the substance of the July 20, 2006, and July 21, 2006 discussions in the file.

The file includes two "Interview Summary" sheets prepared by the examiner. The first interview summary is dated July 20, 2006, and states it is a summary of a telephone conversation between

the examiner and Attorney William Logsdon. The interview summary does not include any reference to a RCE or the examiner stating petitioner did not need to file any additional papers to avoid abandonment. The second interview summary is also dated July 20, 2006, and states it is a summary of a telephone conversation between the examiner and Attorney Alex Detschelt. The second summary states, "Applicant's six month deadline expired July 20, 2006. Attorney stated that a petition to revive will be submitted at a later date. The examiner will delay submittal of a notice of abandonment since applicant requests to revive application."

The Office notes Exhibit A is missing from the file.

The petition under 37 CFR 1.137(a):

A grantable petition under 37 CFR 1.137(a) must be accompanied by a showing to the satisfaction of the Commissioner that the entire delay in filing the required reply from the due date for the reply until the filing of a grantable petition pursuant to this paragraph was unavoidable.

The showing of record is not sufficient to establish to the satisfaction of the Commissioner that the delay was unavoidable within the meaning of 37 CFR 1.137(a).

35 U.S.C. 133 states in part,

> Upon failure of the applicant to prosecute the application within six months after any action therein ... the application shall be regarded as abandoned.

The statutory deadline to file a proper reply to the final Office action was July 20, 2006.

If a proper reply to a final Office action is timely filed prior to the statutory deadline, but is not considered by the examiner until after the statutory deadline, then the application is *not* abandoned. In other words, if the reply filed March 20, 2006, had been a proper reply, petitioner would not have needed to file a RCE on July 20, 2006.

A response to a final rejection may be entered if it presents an amendment that prima facie places the application in condition for allowance. The examiner determined the amendment did not prima facie place the application in condition for allowance. Therefore, a proper reply was not timely filed in response to the final Office action and the application became abandoned as of midnight on July 20, 2006.

To the extent the examiner stated the application would not be abandoned, even if a proper reply was not filed by the statutory deadline, petitioner should have recognized the examiner was incorrect. Petitioner had no reason to conclude the examiner had the authority to waive a time requirement imposed by Congress.

The Office recognizes Exhibit A is missing from the file. However, the Office need not evaluate evidence filed to support the conclusion the examiner provided incorrect advice. Even if an examiner gives advice contradicting a statute, delay based on the advice is not unavoidable.

The petition under 37 CFR 1.137(b):

The instant petition requests revival of the application.

Petitioner has met the requirements to revive the above-identified application pursuant to 37 CFR 1.137(b). Therefore, the petition is granted and the application is revived.

Fees:

The fee for a petition under 37 CFR 1.137(a) is $500. The fee for a petition under 37 CFR 1.137(b) is $1,500. The fee for a RCE is $790. The total fee owed by petition is $2,790. Petitioner submitted $2,290. Therefore, $500 has been charged to petitioner's deposit account.

The Office action mailed August 22, 2006:

The examiner mailed non-final Office action on August 22, 2006. The examiner does not have the authority to mail an Office action during the time an application is abandoned. Therefore, the Office action is withdrawn and vacated.

Technology Center Art Unit 3722 will be informed of the instant decision. Thereafter, the examiner will mail a new non-final Office action. The time period for responding to the new non-final Office action will be set to run from the mailing date of the new non-final Office action.

Telephone inquiries regarding this communication should be directed to Petitions Attorney Steven Brantley at (571) 272-3203.

Charles Steven Brantley
Senior Petitions Attorney
Office of Petitions

UNITED STATES PATENT AND TRADEMARK OFFICE

Commissioner for Patents
United States Patent and Trademark Office
P.O. Box 1450
Alexandria, VA 22313-1450
www.uspto.gov

KRIEGSMAN & KRIEGSMAN
665 FRANKLIN STREET
FRAMINGHAM, MA 01702

COPY MAILED

DEC 1 6 2005

OFFICE OF PETITIONS

In re Application of :
Jay Prabhakar :
Application No. 10/413,412 :
Filed: April 14, 2003 :
Attorney Docket No. 81837 :

ON PETITION

This is a decision on the petition under 37 C.F.R. 1.137(b), filed December 8, 2005, to revive the above-identified application.

The petition is **dismissed**.

Any request for reconsideration of this decision must be submitted within TWO (2) MONTHS from the mail date of this decision. Extensions of time under 37 CFR 1.136(a) are permitted. The reconsideration request should include a cover letter entitled "Renewed Petition under 37 CFR 1.137(b)."

This application became abandoned for failure to timely file a proper reply to the final Office action mailed April 20, 2005. Accordingly, this application became abandoned on July 21, 2005. A Notice of Abandonment was mailed on November 18, 2005.

Effective December 1, 1997, the provisions of 37 CFR 1.137(b) now provide that where the delay in reply was unintentional, a petition may be filed to revive an abandoned application pursuant to 37 CFR 1.137(b). A grantable petition pursuant to 37 CFR 1.137(b) must be accompanied by:

(1) the required reply, unless previously filed. In a nonprovisional application abandoned for failure to prosecute, the required reply may be met by the filing of a continuing application. In an application, abandoned or lapsed for failure to pay the issue fee or any portion thereof, the required reply must be the payment of the issue fee or any outstanding balance thereof.

(2) the petition fee as set forth in 37 CFR 1.17(m);

(3) a statement that the entire delay in filing the required reply from the due date for the reply until the filing of a grantable petition pursuant to 37 CFR 1.137(b) was unintentional. The Commissioner may require additional information where there is a question whether the delay was unintentional; and

(4) any terminal disclaimer (and fee set forth in 37 CFR 1.20(d)) required pursuant to 37 CFR 1.137(d).

The instant petition does not satisfy requirement (3) above.

The petition is not signed. Therefore, the statement "that the entire delay in filing the required reply from the due date for the reply until the filing of a grantable petition pursuant to 37 CFR 1.137(b) was unintentional" can not be accepted.

Please note 37 CFR 1.33:

§ 1.33 Correspondence respecting patent applications, reexamination proceedings, and other proceedings.

(b) Amendments and other papers. Amendments and other papers, except for written assertions pursuant to § 1.27(c)(2)(ii) of this part, filed in the application <u>must</u> be signed by:

(1) A patent practitioner of record appointed in compliance with § 1.32(b);

(2) A patent practitioner not of record who acts in a representative capacity under the provisions of § 1.34;

(3) An assignee as provided for under § 3.71(b) of this chapter; or

(4) All of the applicants (§ 1.41(b)) for patent, unless there is an assignee of the entire interest and such assignee has taken action in the application in accordance with § 3.71 of this chapter.

Further correspondence with respect to this matter should be addressed as follows:

By mail: Mail Stop Petition
Commissioner for Patents
Box 1450
Alexandria, VA 22313

By FAX: (571) 273-8300
Attn: Office of Petitions

By hand: Customer Service Window
Randolph Building
401 Dulany Street
Alexandria, VA 22314

Telephone inquiries should be directed to the undersigned at (571) 272-3228.

Edward J. Tannouse
Petitions Attorney
Office of Petitions
Office of the Deputy Commissioner
for Patent Examination Policy

UNITED STATES PATENT AND TRADEMARK OFFICE

Commissioner for Patents
United States Patent and Trademark Office
P.O. Box 1450
Alexandria, VA 22313-1450
www.uspto.gov

KRIEGSMAN & KRIEGSMAN
665 FRANKLIN STREET
FRAMINGHAM, MA 01702

COPY MAILED

JAN 20 2006

OFFICE OF PETITIONS

In re Application of	:	
Jay Prabhakar	:	
Application No. 10/413,412	:	ON PETITION
Filed: April 14, 2003	:	
Attorney Docket No. 81837	:	

This is a decision on the renewed petition under 37 CFR 1.137(b), filed January 9, 2006, to revive the above-identified application.

The petition is **GRANTED**.

This application became abandoned for failure to timely file a proper reply to the final Office action mailed April 20, 2005. Accordingly, this application became abandoned on July 21, 2005. A Notice of Abandonment was mailed on November 18, 2005.

The file is being forwarded to Technology Center 2800 for review of the Request For Continued Examination and amendment, *in due course*.

Telephone inquiries concerning this matter may be directed to the undersigned at (571) 272-3228.

Edward J. Tannouse
Petitions Attorney
Office of Petitions
Office of the Deputy Commissioner
for Patent Examination Policy

UNITED STATES PATENT AND TRADEMARK OFFICE

COMMISSIONER FOR PATENTS
UNITED STATES PATENT AND TRADEMARK OFFICE
P.O. BOX 1450
ALEXANDRIA, VA 22313-1450
www.uspto.gov

Paper No. 6

BOX IP DEPARTMENT
LEWIS RICE & FINGERSH
500 NORTH BROADWAY
SUITE 2000
ST. LOUIS, MO 63102

COPY MAILED

FEB 0 5 2004

OFFICE OF PETITIONS

In re Application of
Teresa Hickok et al
Application No. 10/413,427
Filed: April 14, 2003
Attorney Docket No. 24/1166US

ON PETITION

This is a decision on the renewed petition under 37 CFR 1.137(b), filed January 20, 2004, to revive the above-identified application.

The petition is **DISMISSED**.

Any request for reconsideration of this decision must be submitted within TWO (2) MONTHS from the mail date of this decision. Extensions of time under 37 CFR 1.136(a) are permitted. The reconsideration request should include a cover letter entitled "Renewed Petition under 37 CFR 1.137(b)." No additional fee is required with any renewed petition. Petitioner is advised that this is **not** a final agency action decision.

The above-identified application became abandoned for failure to reply in a timely manner to the Notice to File Missing Parts of Nonprovisional Application (Notice) mailed June 12, 2003. The Notice set a period for reply of two (2) months from the mail date of the Notice. No extensions of time under the provisions of 37 CFR 1.136(a) were obtained. Accordingly, the above-identified application became abandoned on August 13, 2003.

A grantable petition to revive an abandoned application under 37 CFR 1.137(b) must be accompanied by: (1) the required reply (unless previously filed), which may met by the filing of a continuing application in a nonprovisional application abandoned for failure to prosecute, but must be the payment of the issue fee or any outstanding balance thereof in an application or patent, abandoned or lapsed for failure to pay the issue fee or any portion thereof; (2) the petition fee as set forth in 37 CFR 1.17(m); (3) a statement that the entire delay in filing the required reply from the due date for the reply until the filing of a grantable petition pursuant to 37 CFR 1.137(b) was unintentional; and (4) any terminal disclaimer (and fee as set forth in 37 CFR 1.20(d)). This petition lacks item (1) above.

The Notice to File Missing Parts of Nonprovisional Application mailed June 12, 2003, additionally required the submission of drawings in compliance with 37 CFR 1.84. Since petitioner has failed to submit the reply required by 37 CFR 1.137(b)(1), the petition must be dismissed.

Further correspondence with respect to this matter should be addressed as follows:

By mail: Mail Stop PETITION
Commissioner for Patents
Post Office Box 1450
Alexandria, VA 22313-1450

By hand: Crystal Plaza Two, Lobby
2011 South Clark Place
Room 1B03
Arlington, VA 22202

Telephone inquiries concerning this decision should be directed to Wan Laymon at (703) 306-5685.

Wan Laymon

Wan Laymon
Petitions Examiner
Office of Petitions
Office of the Deputy Commissioner
for Patent Examination Policy

UNITED STATES PATENT AND TRADEMARK OFFICE

COMMISSIONER FOR PATENTS
UNITED STATES PATENT AND TRADEMARK OFFICE
P.O. BOX 1450
ALEXANDRIA, VA 22313-1450
www.uspto.gov

Paper No. 10

BOX IP DEPARTMENT
LEWIS RICE & FINGERSH
500 NORTH BROADWAY
SUITE 2000
ST. LOUIS, MO 63102

COPY MAILED

FEB 1 8 2004

OFFICE OF PETITIONS

In re Application of	:	
Teresa Hickok et al	:	
Application No. 10/413,427	:	ON PETITION
Filed: April 14, 2003	:	
Attorney Docket No. 24/1166US	:	

This is a decision on the renewed petition under 37 CFR 1.137(b), filed February 10, 2004, to revive the above-identified application.

The petition is **GRANTED**.

Telephone inquiries concerning this decision should be directed to Wan Laymon at (703) 305-9282.

The application file is being forwarded to the Office of Initial Patent Examination.

Wan Laymon
Petitions Examiner
Office of Petitions
Office of the Deputy Commissioner
for Patent Examination Policy

UNITED STATES PATENT AND TRADEMARK OFFICE

COMMISSIONER FOR PATENTS
UNITED STATES PATENT AND TRADEMARK OFFICE
P.O. BOX 1450
ALEXANDRIA, VA 22313-1450
www.uspto.gov

LADAS & PARRY
26 WEST 61ST STREET
NEW YORK, NY 10023

COPY MAILED

JUL 2 0 2004

OFFICE OF PETITIONS

In re Application of :
Carmi David Gressel, et al. :
Application No. 10/413,430 :
Filed: April 13, 2003 :
Attorney Docket No. I014548-6

NOTICE

This is a notice regarding your request for acceptance of a fee deficiency submission under 37 CFR 1.28. On September 1, 1998, the Court of Appeals for the Federal Circuit held that 37 CFR 1.28(c) is the sole provision governing the time for correction of the erroneous payment of the issue fee as a small entity. **See DH Technology v. Synergystex International, Inc. 154 F.3d 1333, 47 USPQ2d 1865 (Fed. Cir. Sept. 1, 1998).**

The Office no longer investigates or rejects original or reissue applications under 37 CFR 1.56. **1098 Off. Gaz. Pat. Office 502 (January 3, 1989)**. Therefore, nothing in this Notice is intended to imply that an investigation was done.

Your fee deficiency submission under 37 CFR 1.28 is hereby **ACCEPTED**.

Inquiries related to this communication should be directed to the Office of Petitions Staff at (703) 305-9285.

This file is being forwarded to the Technology Center AU 2124 for examination in due course.

Sherry D. Brinkley
Petitions Examiner
Office of Petitions
Office of the Deputy Commissioner
for Patent Examination Policy

UNITED STATES PATENT AND TRADEMARK OFFICE

Commissioner for Patents
United States Patent and Trademark Office
P.O. Box 1450
Alexandria, VA 22313-1450
www.uspto.gov

Fenwick & West LLP
Silicon Valley Center
801 California Street
Mountain View, CA 94041

COPY MAILED

JAN 3 1 2008

OFFICE OF PETITIONS

In re Application of	:	
Michael Wright et al.	:	
Application No. 10/413,443	:	DECISION ON PETITION
Filed: April 11, 2003	:	TO WITHDRAW
Attorney Docket No. 23569-07504	:	FROM RECORD
	:	

This is a decision on the Request to Withdraw as attorney or agent of record under 37 C.F.R. § 1.36(b), filed September 11, 2007.

The request is **NOT APPROVED** as moot.

A review of the file record indicates that the power of attorney to Fenwick & West LLP has been revoked by the assignee of the patent application on October 28, 2007. Accordingly, the request to withdraw under 37 C.F.R. § 1.36(b) is moot.

All future communications from the Office will continue to be directed to the below-listed address until otherwise notified by applicant.

Telephone inquires concerning this decision should be directed to Terri Williams at 571-272-2991.

T. Williams

Terri Williams
Petitions Examiner
Office of Petitions

cc: **Michael T. Sanderson, Esq.**
King & Schickli, PLLC
247 North Broadway
Lexington, KY 40507

UNITED STATES PATENT AND TRADEMARK OFFICE

UNITED STATES DEPARTMENT OF COMMERCE
United States Patent and Trademark Office
Address: COMMISSIONER FOR PATENTS
P.O. Box 1450
Alexandria, Virginia 22313-1450
www.uspto.gov

NEKTAR THERAPEUTICS
201 INDUSTRIAL ROAD
SAN CARLOS, CA 94070

Mail Date: 04/21/2010

Applicant	: Andreas Kordikowski	: DECISION ON REQUEST FOR
Patent Number	: 7582284	: RECALCULATION of PATENT
Issue Date	: 09/01/2009	: TERM ADJUSTMENT IN VIEW
Appliction No	: 10/413,457	: OF WYETH AND NOTICE OF INTENT TO
Filed	: 04/14/2003	: ISSUE CERTIFICATE OF CORRECTION
		:

The Request for Recalculation is **GRANTED** to the extent indicated.

The patent term adjustment has been determined to be **317** days. The USPTO will *sua sponte* issue a certificate of correction reflecting the amount of PTA days determined by the recalculation.

Prior to the issuance of the certificate of correction, the USPTO will afford patentee an opportunity to be heard and request reconsideration. Accordingly, patentee has **one month or thirty (30) days**, whichever is longer, to file a request for reconsideration of this patent term adjustment calculation. See 35 U.S.C. 154(b)(3)(B)(ii) and 37 CFR 1.322(a)(4). No extensions of time will be granted under 37 CFR 1.136.

Patentee should use document code PET.OP if electronically filing a request for reconsideration of this patent term adjustment calculation. The patentee must also include the information required by 37 CFR 1.705(b)(2) and the fee required by 37 CFR 1.18(e). If patentee does not file a timely request for reconsideration of this patent term adjustment calculation including the information required by 37 CFR 1.705(b)(2) and the fee required by 37 CFR 1.18(e), the USPTO will issue a certificate of correction reflecting the PTA determination noted above.

Patentee should be aware that in order to preserve the right to review in the United States District Court for the District of Columbia of the USPTO patent term adjustment determination, patentee must ensure that he or she also take the steps required under 35 U.S.C. 154(b)(4)(A) in a timely manner. Nothing in the request for recalculation should be construed as providing an alternative time frame for commencing a civil action under 35 U.S.C. 154(b)(4)(A).

Any questions concerning this decision should be directed to the Office of Patent Legal Administration at 571-272-7702.

UNITED STATES PATENT AND TRADEMARK OFFICE

UNITED STATES DEPARTMENT OF COMMERCE
United States Patent and Trademark Office
Address: COMMISSIONER FOR PATENTS
P.O. Box 1450
Alexandria, Virginia 22313-1450
www.uspto.gov

APPLICATION NO.	FILING DATE	FIRST NAMED INVENTOR	ATTORNEY DOCKET NO.	CONFIRMATION NO.
10/413,470	04/15/2003	Philippe Grise	0579-1008	2878

466 7590 12/21/2005

YOUNG & THOMPSON
745 SOUTH 23RD STREET
2ND FLOOR
ARLINGTON, VA 22202

EXAMINER
LACYK, JOHN P

ART UNIT	PAPER NUMBER
3735	

DATE MAILED: 12/21/2005

Please find below and/or attached an Office communication concerning this application or proceeding.

UNITED STATES PATENT AND TRADEMARK OFFICE

Commissioner for Patents
United States Patent and Trademark Office
P.O. Box 1450
Alexandria, VA 22313-1450
www.uspto.go

OCT 19 2005

In re Application of
GRISE, PHILIPPE
Appl No.: 10/413,470
Filed: April 15, 2003

DECISION GRANTING PETITION
37 CFR 1.181

This application is before the Director of Technology Center 3700 for reconsideration of the Notice of Abandonment mailed December 28, 2004 for failure to timely reply to the office action mailed June 17, 2004. The petition received December 30, 2004 requests the withdrawing of the holding of abandonment pursuant to 37 CFR 1.181 based on non-receipt of the office action. No fee is required for this petition.

The petition is granted.

In support of the request, petitioner has provided a showing of non-receipt of the Office action in accordance with MPEP 711.03(c)IA. Furthermore, the original office action was returned by the post office and is now in the file.

In view of the above, the Notice of Abandonment mailed December 28, 2004 is hereby vacated and the holding of abandonment is withdrawn. The application will be forwarded to the Technical Support Staff to return the application to an active status and to remail the office action. The statutory period that was originally set forth in the Office communication will be restarted to run from the mail date of the newly supplied office action.

Richard A. Bertsch, Director
Technology Center 3700

YOUNG & THOMPSON
745 SOUTH 23RD STREET
2ND FLOOR
ARLINGTON, VA 22202

UNITED STATES PATENT AND TRADEMARK OFFICE

UNITED STATES DEPARTMENT OF COMMERCE
United States Patent and Trademark Office
Address: COMMISSIONER FOR PATENTS
P.O. Box 1450
Alexandria, Virginia 22313-1450
www.uspto.gov

APPLICATION NO.	FILING DATE	FIRST NAMED INVENTOR	ATTORNEY DOCKET NO.	CONFIRMATION NO.
10/413,470	04/15/2003	Philippe Grise	0579-1008	2878

466 7590 04/03/2006

YOUNG & THOMPSON
745 SOUTH 23RD STREET
2ND FLOOR
ARLINGTON, VA 22202

EXAMINER
LACYK, JOHN P

ART UNIT	PAPER NUMBER
3735	

DATE MAILED: 04/03/2006

Please find below and/or attached an Office communication concerning this application or proceeding.

UNITED STATES PATENT AND TRADEMARK OFFICE

Commissioner for Patents
United States Patent and Trademark Office
P.O. Box 1450
Alexandria, VA 22313-1450
www.uspto.go

OCT 19 2005

In re Application of
GRISE, PHILIPPE
Appl No.: 10/413,470
Filed: April 15, 2003

DECISION GRANTING PETITION
37 CFR 1.181

This application is before the Director of Technology Center 3700 for reconsideration of the Notice of Abandonment mailed December 28, 2004 for failure to timely reply to the office action mailed June 17, 2004. The petition received December 30, 2004 requests the withdrawing of the holding of abandonment pursuant to 37 CFR 1.181 based on non-receipt of the office action. No fee is required for this petition.

The petition is granted.

In support of the request, petitioner has provided a showing of non-receipt of the Office action in accordance with MPEP 711.03(c)IA. Furthermore, the original office action was returned by the post office and is now in the file.

In view of the above, the Notice of Abandonment mailed December 28, 2004 is hereby vacated and the holding of abandonment is withdrawn. The application will be forwarded to the Technical Support Staff to return the application to an active status and to remail the office action. The statutory period that was originally set forth in the Office communication will be restarted to run from the mail date of the newly supplied office action.

Richard A. Bertsch, Director
Technology Center 3700

YOUNG & THOMPSON
745 SOUTH 23RD STREET
2ND FLOOR
ARLINGTON, VA 22202

UNITED STATES PATENT AND TRADEMARK OFFICE

COMMISSIONER FOR PATENTS
UNITED STATES PATENT AND TRADEMARK OFFICE
P.O. BOX 1450
ALEXANDRIA, VA 22313-1450
www.uspto.gov

MCDERMOTT, WILL & EMERY
4370 LA JOLLA VILLAGE DRIVE, SUITE 700
SAN DIEGO CA 92122

COPY MAILED

MAR 16 2005

OFFICE OF PETITIONS

Applicant: Targan et al.
Appl. No.: 10/413,501
Filed: April 11, 2003
Title: METHODS OF ASSESSING CROHN'S DISEASE PATIENT PHENOTYPE BY I2 SEROLOGIC RESPONSE
Attorney Docket No.: 066783-0077
Pub. No.: US 2004/0203076 A1
Pub. Date: October 14, 2004

This is in response to the request for a corrected patent application publication under 37 CFR 1.221(b), which was filed on November 22, 2004.

The request is DISMISSED.

The instant request is that the application be republished because the patent application publication contains a typographical error on the front page of the publication as the title of the invention "METHODS OF ASSESSING CROHN'S DISEASE PATIENT PHENOTYPE BY I2 SEROLOGIC RESPONSE" is misprinted as "METHODS OF ASSESSING CROHN'S DISEASE PATIENT PHENOTYPE BY L2 SEROLOGIC RESPONSE."

37 CFR 1.221(b) is applicable "only when the Office makes a material mistake which is apparent from Office records . . . Any request for a corrected publication or revised patent application publication other than provided as provided in paragraph (a) of this section must be filed within two months from the date of the patent application publication." A material mistake must affect the public's ability to appreciate the technical disclosure of the patent application publication, to determine the scope of the patent application publication, or to determine the scope of the provisional rights that an applicant may seek to enforce upon issuance of a patent.[1] The instant request does not identify a material mistake in the publication made by the Office:

The typographical error on the front page of the patent application publication, wherein the title of the invention "METHODS OF ASSESSING CROHN'S DISEASE PATIENT PHENOTYPE BY I2 SEROLOGIC RESPONSE" is misprinted as "METHODS OF ASSESSING CROHN'S DISEASE PATIENT PHENOTYPE BY L2 SEROLOGIC RESPONSE" is an Office mistake, but it is not a material error under 37 CFR 1.221(b). The mistake is a minor typographical error.

---

[1] Changes to Implement Eighteen-Month Publication of Patent Applications, 65 FR 57023, 57038 (Sept. 20, 2000), 1239 Off. Gaz. Pat. Office Notices 63, 75 (Oct. 10, 2000) (final rule).

The mistake does not affect the public's ability to appreciate the technical disclosure of the patent application publication, or determine the scope of the patent application publication or determine the scope of the provisional rights that an applicant may seek to enforce upon issuance of a patent.

Applicant should file applications in which the text is cleaner and with sufficient clarity and contrast to permit reproduction to avoid errors in the patent application publication process. See 37 CFR 1.52.

On October 15, 2003, a Filing Receipt was mailed, which did not properly list the title of the invention. To avoid this type of problem in the future, applicant's representative should make a request for a corrected filing receipt using the facsimile number (703-746-9195) on the Filing Receipt.

The applicant is advised that a "request for republication of an application previously published" may be filed under 37 CFR 1.221(a). Such a request for republication "must include a copy of the application in compliance with the Office's electronic filing system requirements and be accompanied by the publication fee set forth in § 1.18(d) and the processing fee set forth in § 1.17(i)." If the request for republication does not comply with the electronic filing system requirements, the republication will not take place and the publication fee set forth in § 1.18(d) will be refunded. The processing fee will be retained.

Any request for republication under 37 CFR 1.221(a), must be submitted via the EFS system and questions or request for reconsideration of this decision, should be addressed as follows:

By mail to: Mail Stop PGPUB
Commissioner for Patents
P.O. Box 1450
Alexandria, VA 22313-1450

Inquiries relating to this matter may be directed to Mark Polutta at (571) 272-7709 (voice).

Mark O. Polutta
Office of Patent Legal Administration
Office of the Deputy Commissioner
for Patent Examination Policy

Enclosure: Corrected Filing Receipt

UNITED STATES PATENT AND TRADEMARK OFFICE

Commissioner for Patents
United States Patent and Trademark Office
P.O. Box 1450
Alexandria, VA 22313-1450
www.uspto.gov

TOWNSEND AND TOWNSEND AND CREW, LLP
TWO EMBARCADERO CENTER
EIGHTH FLOOR
SAN FRANCISCO CA 94111-3834

MAILED

JUL 19 2010

OFFICE OF PETITIONS

In re Patent of Targan et al.	:	DECISION ON REQUEST
Patent No. 7,662,569	:	FOR RECONSIDERATION OF
Issue Date: February 16, 2010	:	PATENT TERM ADJUSTMENT
Application No. 10/413,501	:	AND NOTICE OF INTENT TO
Filing Date: April 11, 2003	:	ISSUE CERTIFICATE OF
Attorney Docket No. 025663-001200US	:	CORRECTION

This is a decision on the petition filed on April 13, 2010, which is being treated as a petition under 37 C.F.R. § 1.705(d) requesting the patent term adjustment indicated on the patent be corrected to indicate the term of the patent is extended or adjusted by five hundred eighty-eight (588) days.

The petition to correct the patent term adjustment indicated on the patent to indicate the term of the patent is extended or adjusted by five hundred eighty-eight (588) days is **GRANTED to the extent indicated herein**.

The Office will *sua sponte* issue a certificate of correction. Pursuant to 37 C.F.R. § 1.322, the Office will not issue a certificate of correction without first providing assignee or patentee an opportunity to be heard. Accordingly, patentees are given **one (1) month or thirty (30) days**, whichever is longer, from the mail date of this decision to respond. No extensions of time will be granted under 37 C.F.R. § 1.136.

Nothing in this decision shall be construed as a waiver of the requirement of 35 U.S.C. § 154(b)(4) that any civil action by an applicant dissatisfied with a determination made by the Director under 35 U.S.C. § 154(b)(3) be filed in the United States Court for the District of Columbia within 180 days after the grant of the patent

The periods of delay under 35 U.S.C. § 154(b)(1)(A) ("A Delay"), and 35 U.S.C. § 154(b)(2)(C) ("Applicant Delay") are not in dispute. The period of A Delay is 509 days, and the period of Applicant Delay is 293 days.

Petitioners assert delay under 35 U.S.C. § 154(b)(1)(B) ("B Delay") is 372 days. The Office disagrees with the 372-day calculation of B Delay. Pursuant to 35 U.S.C. § 154(b)(1)(B)(i), B Delay does not include any period consumed by continued examination. Although Petitioners

recognized the need to exclude a time period due to the RCE, Patentees failed to exclude the actual date the RCE was filed from the period of B Delay. Removal of the date the RCE was filed, April 18, 2007, results in a period of B Delay of 371 days.

Petitioners assert, and the Office agrees, the period of A Delay and the period of B Delay do not overlap.

In view of the prior discussion, the patent term is 587 days, which is the sum of 509 days of A Delay and 371 days of B Delay reduced by 293 days of Applicant Delay.

The Office acknowledges submission of the $200.00 fee set forth in 37 C.F.R. § 1.18(e). No additional fees are required.

The application is being forwarded to the Certificates of Correction Branch for issuance of a certificate of correction. The Office will issue a certificate of correction indicating that the term of the patent is extended or adjusted by **five hundred eighty-seven (587)** days.

Telephone inquiries specific to this decision should be directed to Senior Petitions Attorney Steven Brantley at (571) 272-3203.

Charles Steven Brantley
Senior Petitions Attorney
Office of Petitions

Enclosure: Copy of DRAFT Certificate of Correction

UNITED STATES PATENT AND TRADEMARK OFFICE

CERTIFICATE OF CORRECTION

PATENT NO.	:	7,662,569 B2
APPLICATION NO.	:	10/413,501
DATED	:	February 16, 2010
INVENTOR(S)	:	Stephan R. Targan et al.

DRAFT

It is certified that error appears in the above-identified patent and that said Letters Patent is hereby corrected as shown below:

On the Title page,

[*] Notice: Subject to any disclaimer, the term of this patent is extended or adjusted under 35 U.S.C. 154(b) by 216 days.

Delete the phrase "by 216 days" and insert -- by 587 days--

UNITED STATES PATENT AND TRADEMARK OFFICE

COMMISSIONER FOR PATENTS
UNITED STATES PATENT AND TRADEMARK OFFICE
P.O. BOX 1450
ALEXANDRIA, VA 22313-1450
www.uspto.gov

Paper No. 7

ATTY: JASON W. JOHNSTON
DORITY & MANNING, P.A.
POST OFFICE BOX 1449
GREENVILLE SC 29602-1449

COPY MAILED

OCT 06 2003

OFFICE OF PETITIONS

In re Application of
Selebrede, Zucker & Venturo
Application No. 10/413,507
Filed: April 14, 2003
Attorney Docket No. AGX-60
For: SYSTEM FOR DEPOSITING A FILM ONTO A SUBSTRATE USING A LOW PRESSURE GAS PRECURSOR

: DECISION ACCORDING STATUS UNDER 37 CFR 1.47(a)

This is in response to the petition under 37 CFR 1.47(a), filed September 11, 2003 (certificate of mailing date September 8, 2003.

The petition is granted.

Petitioners have shown that the non-signing inventor, Vincent Venturo, has constructively refused to join in the filing of the above-identified application after having been presented with the application papers. Specifically, the affidavit of Attorney Jason W. Johnston establishes that the inventor was mailed and received the application papers, including the specification, claims and drawings, but failed to respond to several requests that he sign the declaration. The affidavit of Lynn Watkins, Assistant to Attorney Johnston, establishes that Mr. Venturo called on August 19, 2003 and told Ms. Watkins that he received numerous correspondence for the above-identified application, but did not want to discuss the correspondence. Ms. Watkins states that Mr. Venturo refused to hold, leave a message, or leave a number where he could be reached. Petitioners have submitted a declaration in compliance with 37 CFR 1.63 and 1.64.

This application and papers have been reviewed and found in compliance with 37 CFR 1.47(a). This application is hereby accorded Rule 1.47(a) status.

As provided in Rule 1.47(c), this Office will forward notice of this application's filing to the non-signing inventor at the address given in the petition. Notice of the filing of this application will also be published in the Official Gazette.

After this decision is mailed, the above-identified application will be forwarded to the Office of Initial Patent Examination for further processing.

Telephone inquiries should be directed to the undersigned at (703) 308-6712.

E. Shirene Willis

E. Shirene Willis
Senior Petitions Attorney
Office of Petitions

UNITED STATES PATENT AND TRADEMARK OFFICE

COMMISSIONER FOR PATENTS
UNITED STATES PATENT AND TRADEMARK OFFICE
P.O. BOX 1450
ALEXANDRIA, VA 22313-1450
www.uspto.gov

VINCENT VENTURO
38330 ANITA COURT
FREMONT CA 94536

COPY MAILED

OCT 06 2003

OFFICE OF PETITIONS

LETTER

In re Application of
Selebrede, Zucker & Venturo
Application No. 10/413,507
Filed: April 14, 2003
Attorney Docket No. AGX-60
For: SYSTEM FOR DEPOSITING A FILM ONTO A SUBSTRATE USING A LOW PRESSURE GAS PRECURSOR

Dear Mr. Venturo:

You are named as a joint inventor in the above identified United States patent application, filed under the provisions of 35 U.S.C. 116 (United States Code), and 37 CFR 1.47(a), Rules of Practice in Patent Cases. Should a patent be granted on the application you will be designated therein as a joint inventor.

As a named inventor you are entitled to inspect any paper in the file wrapper of the application, order copies of all or any part thereof (at a prepaid cost per 37 CFR 1.19) or make your position of record in the application. Alternatively, you may arrange to do any of the preceding through a registered patent attorney or agent presenting written authorization from you. If you care to join the application, counsel of record (see below) would presumably assist you. Joining in the application would entail the filing of an appropriate oath or declaration by you pursuant to 37 CFR 1.63.

Requests for information regarding your application should be directed to the File Information Unit at (703)308-2733. Information regarding how to pay for and order a copy of the application, or a specific paper in the application, should be directed to Certification Division at (703)308-9726 or 1(800)972-6382 (outside the Washington D.C. area).

Telephone inquiries regarding this communication should be directed to the undersigned at (703) 308-6712.

E. Shirene Willis

E. Shirene Willis
Senior Petitions Attorney
Office of Petitions

ATTORNEY OF RECORD: ATTY: JASON W. JOHNSTON
DORITY & MANNING, P.A.
POST OFFICE BOX 1449
GREENVILLE SC 29602-1449

UNITED STATES PATENT AND TRADEMARK OFFICE

COMMISSIONER OF PATENTS

March 7, 2005

Atulya R. Agarwal
Genentech, Inc.
1 DNS Way
South San Francisco, CA 94080

In re Application of:
David Botstein et al
Serial No: 10/413,537 On Petition
Filing Date: April 11, 2003
For: **POLYPEPTIDES SHARING SEQUENCE IDENTITY WITH A FIBROBLAST GROWTH FACTOR POLYPEPTIDE AND NUCLEIC ACIDS ENCODING THE SAME**

In response to the petition received July 22, 2004, to withdraw the holding of abandonment in the above application.

The petition is Granted.

The above-identified application became abandoned for failure to reply with the meaning of 37 C.D.R 1.113 in a timely manner to the Notice to Corrected Application Papers mailed May 16, 2003. Which set forth a shortened statutory period for reply of two months. Accordingly, the above-identified application became abandoned July 17, 2003. The notice of abandonment was mailed on June 10, 2004.

The evidence submitted is sufficient to establish that the petitioners never received the Notice to Corrected Application Papers mailed May 16, 2003.

Enclosed is a new Notice to Corrected Application Papers giving counsel 2 months from the date of the notice to respond.

The office regrets any inconvenience this may have caused the client.

Telephone inquiries concerning this application may be directed to Doshie E. Day (703) 308-3640.

Doshie E. Day
Program Management Assistant
Office of Initial Patent Examination

Enclosure: 1

UNITED STATES PATENT AND TRADEMARK OFFICE

Commissioner for Patents
United States Patent and Trademark Office
P.O. Box 1450
Alexandria, VA 22313-1450
www.uspto.gov

GENENTECH, INC.
1 DNA WAY
SOUTH SAN FRANCISCO CA 94080

COPY MAILED

JUL 2 2 2005

OFFICE OF PETITIONS

In re Application of	:	
Botstein et al.	:	
Application No. 10/413,537	:	ON PETITION
Filed: April 11, 2003	:	
Attorney Docket No. P1219R1EC1	:	

This is a decision on the petition under 37 C.F.R. § 1.137(b), filed May 16, 2005, to revive the above-identified application.

The petition is **GRANTED.**

The above-identified application became abandoned for failure to reply in a timely manner to the Notice to File Corrected Application Papers (Notice) mailed May 16, 2003. The Notice set a period for reply of two (2) months from the mail date of the Notice. No extensions of time under the provisions of 37 CFR 1.136(a) were obtained. Accordingly, the above-identified application became abandoned on July 17, 2003. A Notice of Abandonment was mailed on June 10, 2004.

Petitioner has met the requirements to revive the above-identified application pursuant to 37 CFR 1.137(b).

This matter is being referred to Technology Center 1600 for further examination on the merits.

Telephone inquiries regarding this decision should be directed to the undersigned at (571) 272-3282.

Liana Chase
Petitions Examiner
Office of Petitions
Office of the Deputy Commissioner
for Patent Examination Policy

UNITED STATES PATENT AND TRADEMARK OFFICE

COMMISSIONER FOR PATENTS
UNITED STATES PATENT AND TRADEMARK OFFICE
P.O. BOX 1450
ALEXANDRIA, VA 22313-1450
www.uspto.gov

Paper No. 4

OLIFF & BERRIDGE, PLC
P.O. BOX 19928
ALEXANDRIA, VA 22320

COPY MAILED

DEC 15 2003

OFFICE OF PETITIONS

In re Application of:
Thomas J. Wilton, Joshua J. Anderson and Robert W. Schmitz
Application No. 10/413,544
Filed: April 15, 2003
Title of Invention: METHOD AND APPARATUS FOR ADAPTIVE CONTROL OF VEHICLE REGENERATIVE BRAKING

DECISION REFUSING STATUS UNDER 37 CFR 1.47(a)

This is in response to a petition under 37 CFR 1.47(a), filed November 28, 2003, to allow the other inventor(s) to proceed with the application on behalf of himself or herself and the nonsigning inventor.

The petition is **dismissed**.

Rule 47 applicant is given TWO (2) MONTHS from the mailing date of this decision to reply, correcting the below-noted deficiencies. Any reply should be entitled "Request for Reconsideration of Petition Under 37 CFR 1.47(a)", and should only address the deficiencies noted below, except that the reply may include an oath or declaration executed by the non-signing inventor. Failure to respond will result in abandonment of the application. Any extensions of time will be governed by 37 CFR 1.136(a).

The above-identified application was filed on April 15, 2003, without an oath or declaration. This Office mailed a Notice to File Missing Parts of Nonprovisional Application (hereinafter "Notice") on July 31, 2003, requiring, a properly signed oath or declaration and a late filing fee, oath or declaration and surcharge.

In response to the Notice, Applicant files the instant petition wherein Applicant avers that a Declaration/Power of Attorney and Assignment Documents were mailed to the nonsigning inventor at his last known address. The petition is supported by the Declaration of Paul Szilagyi, wherein it is further asseverated

that the Declaration/Power of Attorney and Assignment Documents were mailed to the nonsigning inventor at his last known address, and the nonsigning inventor expressly refused to cooperate in the prosecution of the instant application.

A grantable petition under 37 CFR 1.47(a) requires: (1) proof that the non-signing inventor cannot be reached or refuses to sign the oath or declaration after having been presented with the application papers (specification, claims and drawings); (2) an acceptable oath or declaration in compliance with 35 U.S.C. §§ 115 and 116; (3) the petition fee; and (4) a statement of the last known address of the non-signing inventor. Applicant lacks item (1) as set forth above.

Applicant lacks item (1) set forth above.

As to item (1), where it is alleged that an applicant refuses to join an application, the applicant must establish that the nonsigning inventor was presented with the application for signature. The Manual of Patent Examining Procedure ("MPEP") states that

> A refusal by an inventor to sign an oath or declaration when the inventor has not been presented with the application papers does not itself suggest that the inventor is refusing to join the application unless it is clear that the inventor understands exactly what he or she is being asked to sign and refuses to accept the application papers. A copy of the application papers should be sent to the last known address of the nonsigning inventor, or, if the nonsigning inventor is represented by counsel, to the address of the nonsigning inventor's attorney.

MPEP 409.03(d).

While the petition avers that the nonsigning inventor has been presented with the Declaration/Power of Attorney and Assignment Documents for signature, the petition does not aver that the application (specification, claims and drawings) was sent to the nonsigning inventor. Accordingly, where it is alleged that an inventor refuses to join an application, the MPEP requires that

a copy of the application be sent to the last known address of the nonsigning inventor. See, MPEP 409.03(e).

Further correspondence with respect to this matter should be addressed as follows:

By mail: Commissioner for Patents
PO Box 1450
Alexandria, VA 22313-1450

By FAX: (703) 872-9306
Attn: Office of Petitions

By hand: 2201 South Clark Place
Customer Window
Crystal Plaza Two, Lobby Room 1B03
Arlington, VA 22202

Telephone inquiries concerning this decision should be directed to the undersigned at (703) 305-0014.

Derek L. Woods
Petitions Attorney
Office of Petitions

UNITED STATES PATENT AND TRADEMARK OFFICE

Commissioner for Patents
United States Patent and Trademark Office
P.O. Box 1450
Alexandria, VA 22313-1450
www.uspto.gov

Paper No.

COPY MAILED

MAY 0 5 2004

OFFICE OF PETITIONS

OLIFF & BERRIDGE, PLC
P.O. BOX 19928
ALEXANDRIA, VA 22320

In re Application of:
Wilton et al.
Application No. 10/413,544
Filed: April 15, 2003
Title of Invention: METHOD AND APPARATUS FOR ADAPTIVE CONTROL OF VEHICLE REGENERATIVE BREAKING

DECISION GRANTING PETITION UNDER 37 CFR 1.47(a)

This is in response to a Request for Reconsideration of Petition under 37 CFR 1.47(a), filed April 16, 2004, to allow the other inventor(s) to proceed with the application on behalf of himself or herself and the nonsigning inventor.

The petition is **granted**.

The above-identified application and papers have been reviewed and found in compliance with 37 CFR 1.47(a). This application is hereby accorded Rule 1.47(a) status.

Petitioner has shown that the non-signing inventor, Robert Schmitz, refuses to join in the application.

As provided in Rule 1.47(a), this Office will forward notice of this application's filing to the non-signing inventor at the addresses given in the Petition. Notice of the filing of this application will also be published in the Official Gazette.

The application file is being returned to the Office of Initial Patent Examination for continued processing.

Telephone inquiries related to this decision may be directed to the undersigned at (703) 305-0014.

Derek L. Woods
Petitions Attorney
Office of Petitions

UNITED STATES PATENT AND TRADEMARK OFFICE

COMMISSIONER FOR PATENTS
UNITED STATES PATENT AND TRADEMARK OFFICE
P.O. BOX 1450
ALEXANDRIA, VA 22313-1450
www.uspto.gov

OLIFF & BERRIDGE, PLC
P.O. BOX 19928
ALEXANDRIA, VA 22320

COPY MAILED

DEC 04 2003

OFFICE OF PETITIONS

In re Application of :
Thomas F. Wilton, Joshua J. :
Anderson and Robert W. Schmitz : DECISION REFUSING STATUS
Application No. 10/413,559 : UNDER 37 CFR 1.47(a)
Filed: April 15, 2003 :
For: METHOD AND APPARATUS FOR ADAPTIVE CONTROL AND PROTECTION OF HYBRID ELECTRIC VEHICLE SYSTEMS

This is in response to the "Petition Under 37 CFR 1.47(a)," filed November 24, 2003.

The petition is dismissed.

Rule 47 applicant is given TWO MONTHS from the mailing date of this decision to reply, correcting the below-noted deficiencies. Any reply should be entitled "Request for Reconsideration of Petition Under 37 CFR 1.47(a)," and should only address the deficiencies noted below, except that the reply may include an oath or declaration executed by the non-signing inventor. **FAILURE TO RESPOND WILL RESULT IN ABANDONMENT OF THE APPLICATION.** Any extensions of time will be governed by 37 CFR 1.136(a).

The above-identified application was filed on April 15, 2003 without an executed oath or declaration and naming Thomas F. Wilton, Joshua J. Anderson and Robert W. Schmitz as joint inventors.

Accordingly, on July 24, 2003, a "Notice to File Missing Parts of Application" was mailed, requiring an executed oath or declaration , and a surcharge for its late filing.

In response, on November 24, 2003, the instant petition was filed.

A grantable petition under 37 CFR 1.47(a) requires:

(1) proof that the non-signing inventor cannot be reached or refuses to sign the oath or declaration after having been

presented with the application papers (specification, claims and drawings);

(2) an acceptable oath or declaration in compliance with 35 U.S.C. §§ 115 and 116;

(3) the petition fee; and

(4) a statement of the last known address of the non-signing inventor.

Applicant lacks item (1), as set forth above.

As to item (1), applicant appears to demonstrate that Mr. Schmitz was only presented with the declaration and assignment. Unless Mr. Schmitz was presented with a copy of the application papers (specification, claims and drawings), Mr. Schmitz could not attest that he has "reviewed and understands the application papers" and therefore could not sign the declaration which he was given. See Manual of Patent Examining Procedure, Section 409.03(d). Petitioner should show that a copy of the application papers was presented to the inventor, but that he did not respond to, or refused, the request that he sign the oath/declaration in order to show that the inventor has refused to join in the application. The proof of the pertinent events should be made by a statement of someone with first hand knowledge of the events.

Further correspondence with respect to this matter should be addressed as follows:

By mail: Mail Stop Petition
Commissioner for Patents
Box 1450
Alexandria, VA 22313

By FAX: (703) 872-9306
Attn: Office of Petitions

By hand: Customer Service Window
2011 South Clark Place
Crystal Plaza Two (left side entrance of building)
Arlington, VA

Telephone inquiries should be directed to the undersigned at (703) 306-9200.

Edward J. Tannouse
Petitions Attorney
Office of Petitions
United States Patent and Trademark Office

UNITED STATES PATENT AND TRADEMARK OFFICE

COMMISSIONER FOR PATENTS
UNITED STATES PATENT AND TRADEMARK OFFICE
P.O. BOX 1450
ALEXANDRIA, VA 22313-1450
www.uspto.gov

OLIFF & BERRIDGE, PLC
P.O. BOX 19928
ALEXANDRIA, VA 22320

COPY MAILED
APR 13 2004
OFFICE OF PETITIONS

In re Application of
Thomas F. Wilton, Joshua J.
Anderson and Robert W. Schmitz
Application No. 10/413,559
Filed: April 15, 2003
For: METHOD AND APPARATUS FOR ADAPTIVE CONTROL AND PROTECTION OF HYBRID ELECTRIC VEHICLE SYSTEMS

: DECISION GRANTING PETITION
: UNDER 37 CFR 1.47(a)

This is in response to the "Request For Reconsideration of Petition Under 37 CFR 1.47(a)," filed April 7, 2004.

The petition is **granted**.

Petitioner has shown that the non-signing inventor has refused to join in the filing of the above-identified application.

The above-identified application and papers have been reviewed and found in compliance with 37 CFR 1.47(a). This application is hereby accorded Rule 1.47(a) status. As provided in Rule 1.47(c), this Office will forward notice of this application's filing to the non-signing inventor at the address given in the Declaration. Notice of the filing of this application will also be published in the Official Gazette.

The file is being forwarded to the Office of Initial Patent Examination for further processing.

Telephone inquiries regarding this decision should be directed to the undersigned at (703) 306-9200.

Edward J. Tannouse
Petitions Attorney
Office of Petitions
United States Patent and Trademark Office

UNITED STATES PATENT AND TRADEMARK OFFICE

COMMISSIONER FOR PATENTS
UNITED STATES PATENT AND TRADEMARK OFFICE
P.O. BOX 1450
ALEXANDRIA, VA 22313-1450
www.uspto.gov

ROBERT SCHMITZ
5748 WEST CARYL PLACE
LITTLETON, CO 80128

COPY MAILED

APR 13 2004

OFFICE OF PETITIONS

In re Application of
Thomas F. Wilton, Joshua J. Anderson and Robert W. Schmitz
Application No. 10/413,559
Filed: April 15, 2003
For: METHOD AND APPARATUS FOR ADAPTIVE CONTROL AND PROTECTION OF HYBRID ELECTRIC VEHICLE SYSTEMS

Dear ROBERT SCHMITZ:

You are named as a joint inventor in the above identified United States patent application, filed under the provisions of 35 U.S.C. 116 (United States Code), and 37 CFR 1.47(a), Rules of Practice in Patent Cases. Should a patent be granted on the application you will be designated therein as a joint inventor.

As a named inventor you are entitled to inspect any paper in the file wrapper of the application, order copies of all or any part thereof (at a prepaid cost per 37 CFR 1.19) or make your position of record in the application. Alternatively, you may arrange to do any of the preceding through a registered patent attorney or agent presenting written authorization from you. If you care to join the application, counsel of record (see below) would presumably assist you. Joining in the application would entail the filing of an appropriate oath or declaration by you pursuant to 37 CFR 1.63.

Telephone inquiries regarding this communication should be directed to Petitions Attorney Edward Tannouse at (703) 306-9200. Requests for information regarding your application should be directed to the File Information Unit at (703) 308-2733. Information regarding how to pay for and order a copy of the application, or a specific paper in the application, should be directed to Certification Division at (703) 308-9726 or 1(800) 972-6382 (outside the Washington D.C. area).

Edward J. Tannouse
Petitions Attorney
Office of Petitions
United States Patent and Trademark Office

OLIFF & BERRIDGE, PLC
P.O. BOX 19928
ALEXANDRIA, VA 22320

UNITED STATES PATENT AND TRADEMARK OFFICE

Commissioner for Patents
United States Patent and Trademark Office
P.O. Box 1450
Alexandria, VA 22313-1450
www.uspto.gov

FRANCIS J. THORNTON
4205 ETHAN ALLEN HIGHWAY
CHARLOTTE VT 05445-0970

COPY MAILED
JUN 23 2006
OFFICE OF PETITIONS

In re Application of	:	
Kevin C. Gower et al	:	
Application No. 10/413,605	:	ON PETITION
Filed: April 14, 2003	:	
Attorney Docket No.: POU920030023US1	:	

This is a decision on the petition, filed June 19, 2006, under 37 CFR 1.313(c)(2) to withdraw the above-identified application from issue after payment of the issue fee.

The petition is **GRANTED**.

The above-identified application is withdrawn from issue for consideration of a submission under 37 CFR 1.114 (request for continued examination). See 37 CFR 1.313(c)(2).

Petitioner is advised that the issue fee paid on May 16, 2006, in the above-identified application cannot be refunded. If, however, the above-identified application is again allowed, petitioner may request that it be applied towards the issue fee required by the new Notice of Allowance. [1]

Telephone inquiries relating to this decision should be directed to the undersigned at (571) 272-3208.

The application is being referred to Technology Center AU 2133 for further processing of the request for continued examination under 37 CFR 1.114.

Karen Creasy

Karen Creasy
Petitions Examiner
Office of Petitions

[1]The request to apply the issue fee to the new Notice may be satisfied by completing and returning the new Issue Fee Transmittal Form PTOL-85(b), which includes the following language thereon: "Commissioner for Patents is requested to apply the Issue Fee and Publication Fee (if any) or re-apply any previously paid issue fee to the application identified above." Petitioner is advised that, whether a fee is indicated as being due or not, the Issue Fee Transmittal Form **must** be completed and timely submitted to avoid abandonment. Note the language in bold text on the first page of the Notice of Allowance and Fee(s) Due (PTOL-85).

UNITED STATES PATENT AND TRADEMARK OFFICE

Commissioner for Patents
United States Patent and Trademark Office
P.O. Box 1450
Alexandria, VA 22313-1450
www.uspto.gov

CASELLA & HESPOS
274 MADISON AVENUE
NEW YORK NY 10016

COPY MAILED

SEP 2 6 2005

OFFICE OF PETITIONS

In re Application of
Theoleyre, et al.
Application No. 10/413,617
Filed: April 14, 2003
Attorney Docket No.: 7246E
FOR: METHOD AND PLANT FOR THE PRODUCTION OF REFINED SUGAR FROM A SUGARED JUICE

DECISION GRANTING PETITION

This is a decision on the petition under 37 CFR 1.181, filed May 16, 2005 (certificate of mailing date May 13, 2005), requesting that the filing date of the above-identified application be corrected to April 14, 2003. The presently accorded filing date is August 20, 2003.

As evidenced by the original filing receipt, this application's filing date was April 14, 2003.

A Notice to File Missing Parts of Nonprovisional Application, mailed June 17, 2003, stated that the application had been accorded a filing date of April 14, 2003, but that an executed declaration and surcharge for the late filing of an executed declaration were required.

Petitioners responded to the June 17, 2003 Notice on August 20, 2003 (certificate of mailing date August 18, 2003) with an executed declaration and a surcharge. In addition, petitioners sought to enter a Figure 1 by preliminary amendment. The submission of missing parts and a preliminary amendment should not have changed the filing date of the application. Petitioners did not request the later filing date.

Unfortunately, due to unknown Office error, the application was accorded an incorrect filing date of August 20, 2003. The same incorrect filing date was listed on the non-final Office action, mailed September 7, 2004.

The application, as originally filed *without Figure 1*, is entitled to a April 14, 2003 filing date. The petition is **GRANTED**. No petition fee has been or will be charged in connection with this matter. It is noted that the originally filed application does not contain drawings. This is acceptable, because the application has method claims.

The application is being returned to Office of Initial Patent Examination for further processing, with a filing date of **April 14, 2003** and the mailing of a corrected filing receipt. As stated above, Figure 1 should not be processed as part of the original application. The issue of adding Figure1 based on 37 CFR 1.57, as mentioned in the instant petition, is one properly addressed by the examiner of record.

Any inquiries pertaining to this matter may be directed to the undersigned at (571) 272-3230.

E. Shirene Willis

E. Shirene Willis
Senior Petitions Attorney
Office of Petitions

UNITED STATES PATENT AND TRADEMARK OFFICE

Commissioner for Patents
United States Patent and Trademark Office
P.O. Box 1450
Alexandria, VA 22313-1450
www.uspto.gov

PATENT DOCUMENTATION CENTER
XEROX CORPORATION
100 CLINTON AVE., SOUTH, XEROX SQUARE, 20TH FLOOR
ROCHESTER NY 14644

COPY MAILED

FEB 08 2006

OFFICE OF PETITIONS

In re Application of	:	
Grillo et al.	:	
Application No. 10/413,633	:	ON PETITION
Filed: April 14, 2003	:	
Attorney Docket No. XERZ 2 00950	:	

This is a decision on the petition under 37 C.F.R. § 1.182, filed November 22, 2005, to change the name of an inventor.

The petition is **GRANTED.**

The name will be changed from Amy A. Albright to Amy A. Grillo.

There is no indication that the person signing the instant petition was ever given a power of attorney or authorization of agent to prosecute the above-identified application. If the person signing the instant petition desires to receive future correspondence regarding this application, the appropriate power of attorney or authorization of agent must be submitted. While a courtesy copy of this decision is being mailed to the person signing the instant petition, all future correspondence will be directed solely to the address currently of record until such time as appropriate instructions are received to the contrary.

This matter is being referred to Technology Center 1700 for further examination on the merits.

Telephone inquiries regarding this decision should be directed to Petitions Examiner Liana Chase at (571) 272-3282.

Frances Hicks
Petitions Examiner
Office of Petitions

Enclosure: Corrected Filing Receipt

Cc: RICHARD M. KLEIN
FAY, SHARPE, FAGAN, MINNICH & MCKEE, LLP
1100 SUPERIOR AVENUE, SEVENTH FLOOR
CLEVELAND, OH 44114

UNITED STATES PATENT AND TRADEMARK OFFICE

UNITED STATES DEPARTMENT OF COMMERCE
United States Patent and Trademark Office
Address: COMMISSIONER FOR PATENTS
P.O. Box 1450
Alexandria, Virginia 22313-1450
www.uspto.gov

APPL NO.	FILING OR 371 (c) DATE	ART UNIT	FIL FEE REC'D	ATTY.DOCKET NO	DRAWINGS	TOT CLMS	IND CLMS
10/413,633	04/14/2003	1756	1268	D/A3118		35	3

CONFIRMATION NO. 6402
CORRECTED FILING RECEIPT
OC000000017976680
OC000000017976680

25453
PATENT DOCUMENTATION CENTER
XEROX CORPORATION
100 CLINTON AVE., SOUTH, XEROX SQUARE, 20TH FLOOR
ROCHESTER, NY 14644

Date Mailed: 02/02/2006

Receipt is acknowledged of this regular Patent Application. It will be considered in its order and you will be notified as to the results of the examination. Be sure to provide the U.S. APPLICATION NUMBER, FILING DATE, NAME OF APPLICANT, and TITLE OF INVENTION when inquiring about this application. Fees transmitted by check or draft are subject to collection. Please verify the accuracy of the data presented on this receipt. **If an error is noted on this Filing Receipt, please mail to the Commissioner for Patents P.O. Box 1450 Alexandria Va 22313-1450. Please provide a copy of this Filing Receipt with the changes noted thereon. If you received a "Notice to File Missing Parts" for this application, please submit any corrections to this Filing Receipt with your reply to the Notice. When the USPTO processes the reply to the Notice, the USPTO will generate another Filing Receipt incorporating the requested corrections (if appropriate).**

Applicant(s)

Amy A. Grillo, Rochester, NY;
Peter V. Nguyen, Webster, NY;
Donald Riley, Rochester, NY;
Allan K. Chen, Oakville, CANADA;
Emily L. Moore, Mississauga, CANADA;
Tie Hwee Ng, Mississauga, CANADA;
Chieh-Min Cheng, Rochester, NY;

Assignment For Published Patent Application

Xerox Corporation

Power of Attorney:

Eugene Palazzo--20881

Domestic Priority data as claimed by applicant

Foreign Applications

If Required, Foreign Filing License Granted: 06/09/2003

The country code and number of your priority application, to be used for filing abroad under the Paris Convention, is US10/413,633

Projected Publication Date: Not Applicable

Non-Publication Request: No

Early Publication Request: No

Title

Toner processes

Preliminary Class

430

PROTECTING YOUR INVENTION OUTSIDE THE UNITED STATES

Since the rights granted by a U.S. patent extend only throughout the territory of the United States and have no effect in a foreign country, an inventor who wishes patent protection in another country must apply for a patent in a specific country or in regional patent offices. Applicants may wish to consider the filing of an international application under the Patent Cooperation Treaty (PCT). An international (PCT) application generally has the same effect as a regular national patent application in each PCT-member country. The PCT process **simplifies** the filing of patent applications on the same invention in member countries, but **does not result** in a grant of "an international patent" and does not eliminate the need of applicants to file additional documents and fees in countries where patent protection is desired.

Almost every country has its own patent law, and a person desiring a patent in a particular country must make an application for patent in that country in accordance with its particular laws. Since the laws of many countries differ in various respects from the patent law of the United States, applicants are advised to seek guidance from specific foreign countries to ensure that patent rights are not lost prematurely.

Applicants also are advised that in the case of inventions made in the United States, the Director of the USPTO must issue a license before applicants can apply for a patent in a foreign country. The filing of a U.S. patent application serves as a request for a foreign filing license. The application's filing receipt contains further information and guidance as to the status of applicant's license for foreign filing.

Applicants may wish to consult the USPTO booklet, "General Information Concerning Patents" (specifically, the section entitled "Treaties and Foreign Patents") for more information on timeframes and deadlines for filing foreign patent applications. The guide is available either by contacting the USPTO Contact Center at 800-786-9199, or it can be viewed on the USPTO website at http://www.uspto.gov/web/offices/pac/doc/general/index.html.

For information on preventing theft of your intellectual property (patents, trademarks and copyrights), you may wish to consult the U.S. Government website, http://www.stopfakes.gov. Part of a Department of Commerce initiative, this website includes self-help "toolkits" giving innovators guidance on how to protect intellectual property in specific countries such as China, Korea and Mexico. For questions regarding patent enforcement issues, applicants may call the U.S. Government hotline at 1-866-999-HALT (1-866-999-4158).

LICENSE FOR FOREIGN FILING UNDER
Title 35, United States Code, Section 184
Title 37, Code of Federal Regulations, 5.11 & 5.15

GRANTED

The applicant has been granted a license under 35 U.S.C. 184, if the phrase "IF REQUIRED, FOREIGN FILING

LICENSE GRANTED" followed by a date appears on this form. Such licenses are issued in all applications where the conditions for issuance of a license have been met, regardless of whether or not a license may be required as set forth in 37 CFR 5.15. The scope and limitations of this license are set forth in 37 CFR 5.15(a) unless an earlier license has been issued under 37 CFR 5.15(b). The license is subject to revocation upon written notification. The date indicated is the effective date of the license, unless an earlier license of similar scope has been granted under 37 CFR 5.13 or 5.14.

This license is to be retained by the licensee and may be used at any time on or after the effective date thereof unless it is revoked. This license is automatically transferred to any related applications(s) filed under 37 CFR 1.53(d). This license is not retroactive.

The grant of a license does not in any way lessen the responsibility of a licensee for the security of the subject matter as imposed by any Government contract or the provisions of existing laws relating to espionage and the national security or the export of technical data. Licensees should apprise themselves of current regulations especially with respect to certain countries, of other agencies, particularly the Office of Defense Trade Controls, Department of State (with respect to Arms, Munitions and Implements of War (22 CFR 121-128)); the Bureau of Industry and Security, Department of Commerce (15 CFR parts 730-774); the Office of Foreign Assets Control, Department of Treasury (31 CFR Parts 500+) and the Department of Energy.

NOT GRANTED

No license under 35 U.S.C. 184 has been granted at this time, if the phrase "IF REQUIRED, FOREIGN FILING LICENSE GRANTED" DOES NOT appear on this form. Applicant may still petition for a license under 37 CFR 5.12, if a license is desired before the expiration of 6 months from the filing date of the application. If 6 months has lapsed from the filing date of this application and the licensee has not received any indication of a secrecy order under 35 U.S.C. 181, the licensee may foreign file the application pursuant to 37 CFR 5.15(b).

UNITED STATES PATENT AND TRADEMARK OFFICE

Commissioner for Patents
United States Patent and Trademark Office
P.O. Box 1450
Alexandria, VA 22313-1450
www.uspto.gov

WELSH & KATZ, LTD.
120 S RIVERSIDE PLAZA
22ND FLOOR
CHICAGO IL 60606

COPY MAILED

MAR 07 2006

OFFICE OF PETITIONS

In re Application of	:	
Joseph Sameh	:	
Application No. 10/413,642	:	DECISION GRANTING PETITION
Filed: April 15, 2003	:	UNDER 37 CFR 1.137(b)
Attorney Docket No. 7309-89393	:	

This is a decision on the petition under 37 CFR 1.137(b), filed January 26, 2006, to revive the above-identified application.

The petition is **GRANTED**.

The petition satisfies the conditions for revival pursuant to the provisions of 37 CFR 1.137(b) in that (1) the reply in the form of an RCE (2) the petition fee; and (3) the required statement of unintentional delay have been received. Accordingly, the reply to the Final rejection of July 18, 2005, is accepted as having been unintentionally delayed.

Telephone inquiries concerning this decision should be directed to the undersigned at (571) 272-3208.

This matter is being referred to Technology Center AU 3626

Karen Creasy

Karen Creasy
Petitions Examiner
Office of Petitions
Office of the Deputy Commissioner
for Patent Examination Policy

UNITED STATES PATENT AND TRADEMARK OFFICE

Commissioner for Patents
United States Patent and Trademark Office
P.O. Box 1450
Alexandria, VA 22313-1450
www.uspto.gov

TERENCE P O'BRIEN
WILSON SPORTING GOODS CO.
8700 W. BRYN MAWR AVENUE
CHICAGO, IL 60631

COPY MAILED

FEB 11 2005

OFFICE OF PETITIONS

In re Application of	:	
Hsin Feng Lin et al	:	
Application No. 10/413,643	:	ON PETITION
Filed: April 15, 2003	:	
Attorney Docket No. WT0116	:	

This is a decision on the petition under 37 CFR 1.137(b), filed September 2, 2004, to revive the above-identified application.

The petition is **GRANTED**.

The above-identified application became abandoned for failure to reply in a timely manner to the Notice To File Missing Parts Of Nonprovisional Application mailed June 16, 2003, which set a shortened statutory period for reply of TWO (2) months. No extensions of time under the provisions of 37 CFR 1.136(a) were obtained. Accordingly, the above-identified application became abandoned on August 17, 2003.

Telephone inquiries concerning this decision should be directed to the undersigned at (571) 272-3208.

The application file is being referred to the Office of Initial Patent Examination.

Karen Creasy

Karen Creasy
Petitions Examiner
Office of Petitions
Office of the Deputy Commissioner
for Patent Examination Policy

SPE RESPONSE FOR CERTIFICATE OF CORRECTION

Paper No.:20060313

DATE : March 13, 2006

TO SPE OF : ART UNIT 2121

SUBJECT : Request for Certificate of Correction on Patent No.: 6963782

A response is requested with respect to the accompanying request for a certificate of correction.

Please complete this form and return with file, within **7** days to:
Certificates of Correction Branch - PK 3-910
Palm location **7590** - Tel. No. 305-8201

With respect to the change(s) requested, correcting Office and/or Applicant's errors, should the patent read as shown in the certificate of correction? No new matter should be introduced, nor should the scope or meaning of the claims be changed.

Thank You For Your Assistance **Certificates of Correction Branch**

The request for issuing the above-identified correction(s) is hereby:
Note your decision on the appropriate box.

☒ **Approved** **All** changes apply.

☐ **Approved in Part** Specify below which changes **do not** apply.

☐ **Denied** State the reasons for denial below.

Comments:

SPE: Anthony Knight **Art Unit** 2121

SPE: P. Vo

SPE RESPONSE FOR CERTIFICATE OF CORRECTION

Paper No.: _____

DATE : 3/7/07

TO SPE OF : ART UNIT 3729

SUBJECT : Request for Certificate of Correction for Appl. No.: 10/413,235 Patent No.: 7103962

Please respond to this request for a certificate of correction within 7 days.

Please review the requested changes/corrections as shown in the **COCIN** document(s) in the IFW application image. No new matter should be introduced, nor should the scope or meaning of the claims be changed.

Please complete the response (see below) and forward the completed response to scanning using document code **COCX**.

Lamonte M. Newsome
Certificates of Correction Branch
703-308-9390 ext. 112

Thank You For Your Assistance

The request for issuing the above-identified correction(s) is hereby:

Note your decision on the appropriate box.

- ☒ **Approved** — **All** changes apply.
- ☐ **Approved in Part** — Specify below which changes **do not** apply.
- ☐ **Denied** — State the reasons for denial below.

Comments: _____

PETER VO
SUPERVISORY PATENT EXAMINER
TECHNOLOGY CENTER 3700

SPE **Art Unit**

UNITED STATES PATENT AND TRADEMARK OFFICE

Commissioner for Patents
United States Patent and Trademark Office
P.O. Box 1450
Alexandria, VA 22313-1450
www.uspto.gov

COPY MAILED

SEP 27 2007

OFFICE OF PETITIONS

MILLENNIUM PHARMACEUTICALS, INC.
75 SIDNEY STREET
CAMBRIDGE, MA 02139

In re Application of Frank Lee et al Application No. 10/413,752 Filed: April 14, 2003 Attorney Docket No. MPI96-005DV1RCECN1M	DECISION ON PETITION UNDER 37 CFR 1.78(a)(3)

This is a decision on the petition under 37 CFR 1.78(a)(3), filed March 12, 2007, to accept an unintentionally delayed claim under 35 U.S.C. § 120 for the benefit of priority to the prior-filed nonprovisional application set forth in the amendment filed on November 26, 2003.

The petition is **GRANTED**.

A petition for acceptance of a claim for late priority under 37 CFR 1.78(a)(3) is only applicable to those applications filed on or after November 29, 2000. Further, the petition is appropriate only after the expiration of the period specified in 37 CFR 1.78(a)(2)(ii). In addition, the petition under 37 CFR 1.78(a)(3) must be accompanied by:

(1) the reference required by 35 U.S.C. § 120 and 37 CFR 1.78(a)(2)(i) of the prior-filed application, unless previously submitted;
(2) the surcharge set forth in § 1.17(t); and
(3) a statement that the entire delay between the date the claim was due under 37 CFR 1.78(a)(2)(ii) and the date the claim was filed was unintentional. The Director may require additional information where there is a question whether the delay was unintentional.

All of the above requirements having been satisfied, the late claim for priority under 35 U.S.C. § 120 is accepted as being unintentionally delayed.

The granting of the petition to accept the delayed benefit claim to the prior-filed application under 37 CFR 1.78(a)(3) should not be construed as meaning that this application is entitled

to the benefit of the prior-filed application. In order for this application to be entitled to the benefit of the prior-filed application, all other requirements under 35 U.S.C. § 120 and 37 CFR 1.78(a)(1) and (a)(2) must be met. Similarly, the fact that the corrected Filing Receipt accompanying this decision on petition includes the prior-filed application should not be construed as meaning that applicant is entitled to the claim for benefit of priority to the prior-filed application noted thereon. Accordingly, the examiner will, in due course, consider this benefit claim and determine whether the application is entitled to the benefit of the earlier filing date.

There is no indication that the person signing the instant petition was ever given a power of attorney or authorization of agent to prosecute the above-identified application. If the person signing the instant petition desires to receive future correspondence regarding this application, the appropriate power of attorney or authorization of agent must be submitted. While a courtesy copy of this decision is being mailed to the person signing the instant petition, all future correspondence will be directed to the address currently of record until such time as appropriate instructions are received to the contrary.

A corrected Filing Receipt, which includes the priority claim to the prior-filed nonprovisional application, accompanies this decision on petition.

Any inquiries concerning this decision may be directed to Irvin Dingle at (571) 272-3210. All other inquiries concerning either the examination procedures or status of the application should be directed to the Technology Center.

This application is being forwarded to Technology Center Art Unit 1644 for consideration by the examiner of applicant's entitlement to claim benefit of priority under 35 U.S.C. § 120 to the prior-filed application.

Frances Hicks
Petition Examiner
Office of Petitions

cc: Tracy M. Sioussat
Millennium Pharmaceuticals, Inc.
40 Landsdowne Street
Cambridge, MA 02139

ATTACHMENT: Corrected Filing Receipt

UNITED STATES PATENT AND TRADEMARK OFFICE

UNITED STATES DEPARTMENT OF COMMERCE
United States Patent and Trademark Office
Address: COMMISSIONER FOR PATENTS
P.O. Box 1450
Alexandria, Virginia 22313-1450
www.uspto.gov

APPL NO.	FILING OR 371(c) DATE	ART UNIT	FIL FEE REC'D	ATTY.DOCKET NO	TOT CLMS	IND CLMS
10/413,752	04/14/2003	1644	750	MPI96-005DV1RCECN1M	9	2

CONFIRMATION NO. 6729

MILLENNIUM PHARMACEUTICALS, INC.
75 Sidney Street
Cambridge, MA 02139

CORRECTED FILING RECEIPT

OC000000026033390

Date Mailed: 09/27/2007

Receipt is acknowledged of this nonprovisional patent application. The application will be taken up for examination in due course. Applicant will be notified as to the results of the examination. Any correspondence concerning the application must include the following identification information: the U.S. APPLICATION NUMBER, FILING DATE, NAME OF APPLICANT, and TITLE OF INVENTION. Fees transmitted by check or draft are subject to collection. Please verify the accuracy of the data presented on this receipt. **If an error is noted on this Filing Receipt, please write to the Office of Initial Patent Examination's Filing Receipt Corrections. Please provide a copy of this Filing Receipt with the changes noted thereon. If you received a "Notice to File Missing Parts" for this application, please submit any corrections to this Filing Receipt with your reply to the Notice. When the USPTO processes the reply to the Notice, the USPTO will generate another Filing Receipt incorporating the requested corrections (if appropriate).**

Applicant(s)

Frank Lee, Chestnut Hill, MA;
Dennis Huszar, Acton, MA;
Wei Gu, Brookline, MA;

Assignment For Published Patent Application

Millennium Pharmaceuticals, Inc.

Power of Attorney: None

Domestic Priority data as claimed by applicant

This application is a CON of 09/322,695 05/28/1999 ABN
which is a DIV of 08/662,560 06/10/1996 PAT 5,908,609

Foreign Applications

If Required, Foreign Filing License Granted: 05/30/2003

The country code and number of your priority application, to be used for filing abroad under the Paris Convention, is US10/413,752

Projected Publication Date: Not Applicable

Non-Publication Request: No

Early Publication Request: No

Title

Screening methods for compounds useful in the regulation of body weight

Preliminary Class

514

PROTECTING YOUR INVENTION OUTSIDE THE UNITED STATES

Since the rights granted by a U.S. patent extend only throughout the territory of the United States and have no effect in a foreign country, an inventor who wishes patent protection in another country must apply for a patent in a specific country or in regional patent offices. Applicants may wish to consider the filing of an international application under the Patent Cooperation Treaty (PCT). An international (PCT) application generally has the same effect as a regular national patent application in each PCT-member country. The PCT process **simplifies** the filing of patent applications on the same invention in member countries, but **does not result** in a grant of "an international patent" and does not eliminate the need of applicants to file additional documents and fees in countries where patent protection is desired.

Almost every country has its own patent law, and a person desiring a patent in a particular country must make an application for patent in that country in accordance with its particular laws. Since the laws of many countries differ in various respects from the patent law of the United States, applicants are advised to seek guidance from specific foreign countries to ensure that patent rights are not lost prematurely.

Applicants also are advised that in the case of inventions made in the United States, the Director of the USPTO must issue a license before applicants can apply for a patent in a foreign country. The filing of a U.S. patent application serves as a request for a foreign filing license. The application's filing receipt contains further information and guidance as to the status of applicant's license for foreign filing.

Applicants may wish to consult the USPTO booklet, "General Information Concerning Patents" (specifically, the section entitled "Treaties and Foreign Patents") for more information on timeframes and deadlines for filing foreign patent applications. The guide is available either by contacting the USPTO Contact Center at 800-786-9199, or it can be viewed on the USPTO website at http://www.uspto.gov/web/offices/pac/doc/general/index.html.

For information on preventing theft of your intellectual property (patents, trademarks and copyrights), you may wish to consult the U.S. Government website, http://www.stopfakes.gov. Part of a Department of Commerce initiative, this website includes self-help "toolkits" giving innovators guidance on how to protect intellectual property in specific countries such as China, Korea and Mexico. For questions regarding patent enforcement issues, applicants may call the U.S. Government hotline at 1-866-999-HALT (1-866-999-4158).

LICENSE FOR FOREIGN FILING UNDER
Title 35, United States Code, Section 184
Title 37, Code of Federal Regulations, 5.11 & 5.15

GRANTED

The applicant has been granted a license under 35 U.S.C. 184, if the phrase "IF REQUIRED, FOREIGN FILING LICENSE GRANTED" followed by a date appears on this form. Such licenses are issued in all applications where the conditions for issuance of a license have been met, regardless of whether or not a license may be required as set forth in 37 CFR 5.15. The scope and limitations of this license are set forth in 37 CFR 5.15(a) unless an earlier license has been issued under 37 CFR 5.15(b). The license is subject to revocation upon written notification. The date indicated is the effective date of the license, unless an earlier license of similar scope has been granted

under 37 CFR 5.13 or 5.14.

This license is to be retained by the licensee and may be used at any time on or after the effective date thereof unless it is revoked. This license is automatically transferred to any related applications(s) filed under 37 CFR 1.53(d). This license is not retroactive.

The grant of a license does not in any way lessen the responsibility of a licensee for the security of the subject matter as imposed by any Government contract or the provisions of existing laws relating to espionage and the national security or the export of technical data. Licensees should apprise themselves of current regulations especially with respect to certain countries, of other agencies, particularly the Office of Defense Trade Controls, Department of State (with respect to Arms, Munitions and Implements of War (22 CFR 121-128)); the Bureau of Industry and Security, Department of Commerce (15 CFR parts 730-774); the Office of Foreign Assets Control, Department of Treasury (31 CFR Parts 500+) and the Department of Energy.

NOT GRANTED

No license under 35 U.S.C. 184 has been granted at this time, if the phrase "IF REQUIRED, FOREIGN FILING LICENSE GRANTED" DOES NOT appear on this form. Applicant may still petition for a license under 37 CFR 5.12, if a license is desired before the expiration of 6 months from the filing date of the application. If 6 months has lapsed from the filing date of this application and the licensee has not received any indication of a secrecy order under 35 U.S.C. 181, the licensee may foreign file the application pursuant to 37 CFR 5.15(b).

UNITED STATES PATENT AND TRADEMARK OFFICE

Commissioner for Patents
United States Patent and Trademark Office
P.O. Box 1450
Alexandria, VA 22313-1450
www.uspto.gov

MOMENTIVE PERFORMANCE MATERIALS INC.
IP LEGAL
ONE PLASTICS AVENUE
BLDG. 51
PITTSFIELD, MA 01201-3697

COPY MAILED

JUL 07 2008

OFFICE OF PETITIONS

In re Application of	:	
Kenrick M. Lewis et al	:	
Application No. 10/413,754	:	ON PETITION
Filed: April 16, 2003	:	
Attorney Docket No. 0118-OS	:	

This is a decision on the petition under 37 CFR 1.137(b), filed February 19, 2008, to revive the above-identified application.

The petition is **GRANTED**.

The above-identified application became abandoned for failure to reply in a timely manner to the non-final Office action mailed April 19, 2006, which set a shortened statutory period for reply of three (3) months. No extension of time under the provisions of 37 CFR 1.136(a) were obtained. Accordingly, the above-identified application became abandoned on July 20, 2006.

The file does not indicate a change of address has been submitted, although the address given on the petition differs from the address of record. If appropriate, a change of address should be filed in accordance with MPEP 601.03. A courtesy copy of this decision is being mailed to the address given on the petition; however, the Office will mail all future correspondence solely to the address of record.

Telephone inquiries concerning this decision should be directed to Irvin Dingle at (571) 272-3210.

This matter is being referred to Technology Center AU 1754 for further processing.

Irvin Dingle
Petitions Examiner
Office of Petitions

cc: Adrian T. Calderone
Dilworth & Barrese, LLP
333 Earle Ovington Blvd.
Uniondale, NY 11553

UNITED STATES PATENT AND TRADEMARK OFFICE

MAILED

JUL 2 0 2004

TECHNOLOGY CENTER 2100

Commissioner for Patents
United States Patent and Trademark Office
P.O. Box 1450
Alexandria, VA 22313-1450
www.uspto.gov

Morrison & Foerster LLP
425 Market Street
San Francisco, CA 94105-2482

In re Application of:
Man D. TRINH, et al.
Application No. 10/413,776
Filed: April 14, 2003
For: NETWORK PROCESSOR ARCHITECTURE

DECISION ON REQUEST TO WITHDRAW AS ATTORNEY OR AGENT

This is a decision on the Request to Withdraw from Representation filed June 30, 2004.

A grantable request to withdraw as attorney of record should indicate thereon the present mailing addresses of the attorney(s) who is/are withdrawing from the record and of the applicant. The request for withdrawal must be signed by every attorney seeking to withdraw or contain a clear indication that one attorney is signing on behalf of another/others. A request to withdraw will not be approved unless at least 30 (thirty) days would remain between the date of approval and the later of the expiration date of a time to file a response or the expiration date of the maximum time period which can be extended under 37 C.F.R. § 1.136(a). The effective date of withdrawal being the date of decision and not the date of request. See M.P.E.P. § 402.06. 37 C.F.R. § 1.36 further requires that the applicant or patent owner be notified of the withdrawal of the attorney or agent.

The request is **GRANTED.**

All future communications from the Office will be directed to the below-listed address until otherwise notified by applicant. This correspondence address is provided by the withdrawn attorney(s). Applicant is reminded of the obligation to promptly notify the Patent and Trademark Office (Office) of any change in correspondence address to ensure receipt of all communications from the Office.

Vincent N. Trans
Special Program Examiner
Technology Center 2100
Computer Architecture, Software, and
Information Security
703-305-9750

cc: Mark Wilson
Wilson & Ham
1811 Santa Rita Road
Suite 130
Pleasanton, CA 94586

UNITED STATES PATENT AND TRADEMARK OFFICE

Commissioner for Patents
United States Patent and Trademark Office
P.O. Box 1450
Alexandria, VA 22313-1450
www.uspto.gov

Law Office of Tim Cook, P.C.
P.O. Box 10107
Liberty, TX 77575

MAILED

SEP 1 4 2005

Technology Center 2100

In re Application of:
William F. WISE, JR., et al.
Application No. 10/413,784
Filed: April 15, 2003
For: METHOD AND APPARATUS FOR FINDING DIFFERENCES BETWEEN TWO COMPUTER FILES EFFICIENTLY IN LINEAR TIME AND FOR USING THESE DIFFERENCES TO UPDATE COMPUTER FILES

DECISION ON PETITION TO MAKE SPECIAL

This is a decision on the petition under 37 C.F.R. § 1.102(c) and M.P.E.P. § 708.02, Section IV: Applicant's Age, filed July 7, 2005 to make the above-identified application special.

A grantable petition to make special under 37 C.F.R. § 1.102(c) and in accordance with M.P.E.P. § 708.02, Section IV must include a showing, as by a birth certificate or the applicant's statement, that the applicant is sixty five (65) years of age or more. No fee is required for this petition.

The petition includes a statement that the applicant, William F. Wise, Jr., is over sixty five (65) years of age.

Accordingly, the petition is GRANTED. The application is being forwarded to the examiner for expedite prosecution.

For Vincent N. Trans
Special Program Examiner
Technology Center 2100
Computer Architecture, Software, and
Information Security
571-272-3613

UNITED STATES PATENT AND TRADEMARK OFFICE

Commissioner for Patents
United States Patent and Trademark Office
P.O. Box 1450
Alexandria, VA 22313-1450
www.uspto.gov

DEC 02 2005

Silicon Valley Patent Group LLP
2350 Mission College Blvd.
Suite 360
Santa Clara, CA 95054

In re Application of:	:	
Stern	:	
Serial No.: 10/413,795	:	DECISION ON REQUEST TO WITHDRAW FROM RECORD
Filed: April 14, 2003	:	
Attorney Docket No.: **GRA003-1D US**	:	

This is a decision on the request to withdraw as attorney/agent of record under 37 C.F.R. § 1.36, filed October 13, 2004.

A grantable request to withdraw as attorney of record must be signed by every attorney seeking to withdraw or contain a clear indication that one attorney is signing on behalf of others. A request to withdraw will not be approved unless at least thirty (30) days would remain between the date of approval and the later of the expiration date of a time to file a response or the expiration date of the maximum time period, which can be extended under 37 C.F.R. § 1.136(a).

The request meets all the above stated requirements. The request was signed by Omkarmurthy K. Suryadevara, on behalf of himself and all the attorneys/agents of record. The request is **APPROVED**.

There are no attorneys/agents of record at this time.

All future communications from the Office will be directed Morris S. Getzels, at the below address, until otherwise notified by applicant.

Inquiries related to this decision should be directed to Edward Westin at (571) 272-1638.

Edward Westin

Edward Westin, Special Programs Examiner
Technology Center 2800
Semiconductors, Electrical and Optical
Systems and Components

cc: Morris S. Getzels Law Office
6047 Tampa Ave. Suite 307
Tarzana, CA 91356-1176

UNITED STATES PATENT AND TRADEMARK OFFICE

UNITED STATES DEPARTMENT OF COMMERCE
United States Patent and Trademark Office
Address: COMMISSIONER FOR PATENTS
P.O. Box 1450
Alexandria, Virginia 22313-1450
www.uspto.gov

MCKEE, VOORHEES & SEASE, P.L.C.
801 GRAND AVENUE
SUITE 3200
DES MOINES, IA 50309-2721

Mail Date: 04/20/2010

Applicant	: Bruce D. Melick	: DECISION ON REQUEST FOR
Patent Number	: 7571211	: RECALCULATION of PATENT
Issue Date	: 08/04/2009	: TERM ADJUSTMENT IN VIEW
Appliction No	: 10/413,801	: OF WYETH AND NOTICE OF INTENT TO
Filed	: 04/15/2003	: ISSUE CERTIFICATE OF CORRECTION
		:

The Request for Recalculation is **GRANTED** to the extent indicated.

The patent term adjustment has been determined to be **0** days. The USPTO will *sua sponte* issue a certificate of correction reflecting the amount of PTA days determined by the recalculation.

Prior to the issuance of the certificate of correction, the USPTO will afford patentee an opportunity to be heard and request reconsideration. Accordingly, patentee has **one month or thirty (30) days**, whichever is longer, to file a request for reconsideration of this patent term adjustment calculation. See 35 U.S.C. 154(b)(3)(B)(ii) and 37 CFR 1.322(a)(4). No extensions of time will be granted under 37 CFR 1.136.

Patentee should use document code PET.OP if electronically filing a request for reconsideration of this patent term adjustment calculation. The patentee must also include the information required by 37 CFR 1.705(b)(2) and the fee required by 37 CFR 1.18(e). If patentee does not file a timely request for reconsideration of this patent term adjustment calculation including the information required by 37 CFR 1.705(b)(2) and the fee required by 37 CFR 1.18(e), the USPTO will issue a certificate of correction reflecting the PTA determination noted above.

Patentee should be aware that in order to preserve the right to review in the United States District Court for the District of Columbia of the USPTO patent term adjustment determination, patentee must ensure that he or she also take the steps required under 35 U.S.C. 154(b)(4)(A) in a timely manner. Nothing in the request for recalculation should be construed as providing an alternative time frame for commencing a civil action under 35 U.S.C. 154(b)(4)(A).

Any questions concerning this decision should be directed to the Office of Patent Legal Administration at 571-272-7702.

UNITED STATES PATENT AND TRADEMARK OFFICE

Commissioner for Patents
United States Patent and Trademark Office
P.O. Box 1450
Alexandria, VA 22313-1450
www.uspto.gov

E I DU PONT DE NEMOURS AND COMPANY
LEGAL PATENT RECORDS CENTER
BARLEY MILL PLAZA 25/1122B
4417 LANCASTER PIKE
WILMINGTON DE 19805

COPY MAILED

DEC 2 3 2009

OFFICE OF PETITIONS

In re Application of	:	
Patricia A. MORRIS et al.	:	
Application No. 10/413,815	:	DECISION ON PETITION
Filed: April 15, 2003	:	
Attorney Docket No. CL2085 US NA	:	

This is a decision on the petition, filed June 25, 2009, which is being treated as a petition under 37 CFR 1.8(b), requesting withdrawal of the holding of abandonment in the above-identified application.

The petition is **GRANTED**.

This application was held abandoned for failure to timely respond to the Office action of March 31, 2008, which set a one (1) month shortened statutory period for reply. Accordingly, a reply was due on or before April 31, 2008.

Petitioner states that a timely reply was submitted by facsimile on April 30, 2008. Petitioner has submitted copies of the previously mailed correspondence and return receipt confirmation of the facsimile transmission, which would have rendered the reply timely if received.

The petition satisfies the requirements of 37 CFR 1.8(b). Accordingly, the holding of abandonment for failure to timely file a reply to the Office action of March 31, 2008 is hereby withdrawn and the application restored to pending status.

The copy of the reply received with the petition will be accepted in place of the reply shown to have been mailed (or transmitted by facsimile) on April 30, 2008.

Telephone inquiries concerning this decision should be directed to Michelle R. Eason at (571) 272-4231.

This application is being referred to Technology Center AU 1797 for appropriate action in the normal course of business on the reply received with petition.

Thurman K. Page
Petitions Examiner
Office of Petitions

UNITED STATES PATENT AND TRADEMARK OFFICE

COMMISSIONER FOR PATENTS
UNITED STATES PATENT AND TRADEMARK OFFICE
P.O. BOX 1450
ALEXANDRIA, VA 22313-1450
www.uspto.gov

Paper No. 6

COPY MAILED

JAN 16 2004

OFFICE OF PETITIONS

WYATT, TARRANT & COMBS, LLP
1715 AARON BRENNER DRIVE
SUITE 800
MEMPHIS, TN 38120-4367

In re Application of :
Cotton : DECISION ON PETITION
Filing Date: April 15, 2003 :
Application No. 10/413,819 :
Atty. Dkt. No.: A02131US :

This decision is in response to the "PETITION RE NOTICE OF OMITTED ITEM(S) IN A NONPROVISIONAL APPLICATION," filed June 26, 2003 and supplemented January 12, 2004, requesting that the above-identified application be accorded a filing date of April 15, 2003.

The application was filed April 15, 2003. The Notice to File Omitted Item(s) in a Nonprovisional Application mailed June 10, 2003 indicated that the application had been accorded a filing date but that Page 14 of the specification appeared to have been omitted.

In response, the present petition was filed wherein petitioner argues that the application as deposited included Page 14. Petitioner has included as proof of mailing and proof of receipt of the page in question a return postcard date stamped by the Office on April 15, 2003. A copy of page 14 of the specification purportedly filed with the application on April 15, 2003 was submitted on January 12, 2004.

The original page 14 of the specification has not been located. However, in view of the evidence presented, the petition for a filing date of April 15, 2003 is GRANTED.

Since the original page 14 of the specification cannot be located in the Office, the copy of page 14 supplied with the instant petition will be used for examination purposes.

No petition fee is due in connection with this matter.

This application will be returned to the Office of Initial Patent Examination for further processing with a filing date of April 15, 2003.

Telephone inquiries related to this decision may be directed to the undersigned at (703) 305-0310.

Alesia M. Brown
Senior Petitions Attorney
Office of Petitions

UNITED STATES PATENT AND TRADEMARK OFFICE

Commissioner for Patents
United States Patent and Trademark Office
P.O. Box 1450
Alexandria, VA 22313-1450
www.uspto.gov

Beusse Wolter Sanks Mora & Maire, P.A.
390 North Orange Avenue
Suite 2500
Orlando, FL 32801

COPY MAILED

JAN 0 5 2007

OFFICE OF PETITIONS

In re Application of	:	
Max Wayne Strother	:	
Application No. 10/413,833	:	DECISION ON PETITION
Filed: April 15, 2003	:	TO WITHDRAW
Attorney Docket No. 10269-001	:	FROM RECORD

This is a decision on the Request to Withdraw as attorney or agent of record under 37 C.F.R. § 1.36(b), filed November 1, 2006.

The request is **APPROVED**.

A grantable request to withdraw as attorney/agent of record must be signed by every attorney/agent seeking to withdraw or contain a clear indication that one attorney is signing on behalf of another/others. A request to withdraw will not be approved unless at least 30 (thirty) days would remain between the date of approval and the later of the expiration date of a time to file a response or the expiration date of the maximum time period which can be extended under 37 C.F.R. § 1.136(a).

The request was signed by James H. Beusse on behalf of all attorneys of record who are associated with Customer No. 29391.

All attorneys/agents associated with the Customer No. 29391 have been withdrawn.

Applicant is reminded that there is no attorney of record at this time.

All future correspondence will be directed to the first named inventor Max Wayne Strother at the address indicated below.

There is an outstanding Office action mailed September 8, 2006 that requires a reply from the applicant.

Telephone inquiries concerning this decision should be directed to Terri Williams at 571-272-2991.

T. Williams
Terri Williams
Petitions Examiner
Office of Petitions

cc: **Max Wayne Strother**
304 Monticello Drive
Altamonte Springs, FL 32701

UNITED STATES PATENT AND TRADEMARK OFFICE

UNITED STATES DEPARTMENT OF COMMERCE
United States Patent and Trademark Office
Address: COMMISSIONER FOR PATENTS
P.O. Box 1450
Alexandria, Virginia 22313-1450
www.uspto.gov

APPLICATION NUMBER	FILING OR 371 (c) DATE	FIRST NAMED APPLICANT	ATTY. DOCKET NO./TITLE
10/413,833	04/15/2003	Max Wayne Strother	10269-001

CONFIRMATION NO. 4275

OC000000021842404

OC000000021842404

29391
BEUSSE WOLTER SANKS MORA & MAIRE, P. A.
390 NORTH ORANGE AVENUE
SUITE 2500
ORLANDO, FL 32801

Date Mailed: 01/04/2007

NOTICE REGARDING CHANGE OF POWER OF ATTORNEY

This is in response to the Power of Attorney filed 11/01/2006.

- The withdrawal as attorney in this application has been accepted. Future correspondence will be mailed to the new address of record. 37 CFR 1.33.

Terri S. Williams

TERRI S WILLIAMS
OP (571) 272-2991

FORMER ATTORNEY/AGENT COPY

UNITED STATES PATENT AND TRADEMARK OFFICE

Commissioner for Patents
United States Patent and Trademark Office
P.O. Box 1450
Alexandria, VA 22313-1450
www.uspto.gov

DORSEY & WHITNEY LLP
INTELLECTUAL PROPERTY DEPARTMENT
801 GRAND, SUITE 3900
DES MOINES IA 50309

COPY MAILED

APR 21 2005

OFFICE OF PETITIONS

ON PETITION

In re Application of	:
Kurt Hoffmeister et al	:
Application No. 10/413,845	:
Filed: April 15, 2003	:
Attorney Docket No. 447313-7	:

This is a decision on the petition under 37 CFR 1.137(b), filed December 17, 2004, to revive the above-identified application.

The petition is **GRANTED**.

The above-identified application became abandoned for failure to reply in a timely manner to the nonfinal Office action mailed December 31, 2003, which set a shortened statutory period for reply of three (3) months. No extensions of time under the provisions of 37 CFR 1.136(a) were obtained. Accordingly, the above-identified application became abandoned on April 1, 2004.

Telephone inquiries concerning this decision should be directed to the undersigned at (571) 272-3208.

This matter is being referred to Technology Center AU 2851.

Karen Creasy

Karen Creasy
Petitions Examiner
Office of Petitions
Office of the Deputy Commissioner
for Patent Examination Policy

SPE RESPONSE FOR CERTIFICATE OF CORRECTION

DATE : 10/10/07

Paper No.: _____

TO SPE OF : **Technology Center** 2822

10/413865

SUBJECT : Request for Certificate of Correction on Patent No.: 6882049 B2

A response is requested with respect to the accompanying request for a certificate of correction.

Please complete this form and return with file, within **7** days to:

Palm location **7580, Certificates of Correction Branch – South Tower – 9A22**

If response is for an IFW, **return to employee (named below) via PUBSCofC Team in MADRAS.**

With respect to the change(s) requested, correcting Office and/or Applicant's errors, should the patent read as shown in the certificate of correction (COCIN)? No new matter should be introduced, nor should the scope or meaning of the claims be changed.

Thank You For Your Assistance

Elisha Evans
Certificates of Correction Branch
Tel. No. 703-308-9390 EXT 110

The request for issuing the above-identified correction(s) is hereby:

Note your decision on the appropriate box.

- ☒ **Approved** — **All** changes apply.
- ☐ **Approved in Part** — Specify below which changes **do not** apply.
- ☐ **Denied** — State the reasons for denial below.

Comments:

_____

_____

_____

_____

_____

SPE 2822 **Art Unit**

UNITED STATES PATENT AND TRADEMARK OFFICE

COMMISSIONER FOR PATENTS
UNITED STATES PATENT AND TRADEMARK OFFICE
P.O. BOX 1450
ALEXANDRIA, VA 22313-1450
www.uspto.gov

Brinks Hofer Gilson & Lione
P.O. Box 10395
Chicago IL 60610

COPY MAILED

JUN 11 2007

OFFICE OF PETITIONS

In re Patent No. 7,139,039	:	
Masaki Yamamoto	:	DECISION ON REQUEST
Issue Date: November 21, 2006	:	FOR RECONSIDERATION
Application No. 10/413,868	:	OF PATENT TERM
Filed: April 15, 2003	:	ADJUSTMENT
Attorney Docket No. 9281-4472	:	

This is a decision on the "Petition for Reconsideration of Patent Term Adjustment," filed October 23, 2006. Patentees request that the patent term adjustment indicated on the face of the Letters Patent be corrected from six hundred and three (603) days to seven hundred and eight (708).

The request for reconsideration of the patent term adjustment under 37 C.F.R. § 1.705(b) is **DISMISSED**.

Patentee's are given **TWO MONTHS** from the mail date of this decision to respond. No extension of time will be granted under 37 C.F.R. § 1.136.

On November 21, 2006, the above-identified application matured into U.S. Patent No. 7,139,039, with a revised patent term of 603 days. The present request for reconsideration filed October 23, 2006, was timely filed as it was submitted concurrently with the issue fee. See § 1.705(b). Patentees assert that an additional period of adjustment should have been entered for the Office taking in excess of three years to issue the patent.

It is noted that 603 days were entered for Office delay in mailing a first notification under 35 U.S.C. 132 pursuant to 37 C.F.R. § 1.702(a)(1). This is the correct period of adjustment for the delay. It is noted that the present patent issued 3 years and 220 days after its filing date[1]. However, any days of

1 Petitioner has asserted that the PTA should be based on the date of the mailing of the notice of allowance, however the rule clearly sets forth that it is the issue date that is used in calculating the PTA.

delay for Office issuance of the patent more than three years after the filing date of the application that overlap with the days of patent term adjustment accorded prior to the issuance of the patent will not result in any additional patent term adjustment. Further, in considering the overlap, the entire period during which the application was pending (except for periods excluded under 35 U.S.C. 154(b)(1)(B)(i)-(iii), and not just the period beginning three years after the actual filing date of the application, is the period of delay under 35 U.S.C. 154(b)(1)(B) in determining whether periods of delay overlap under 35 U.S.C. 154(b)(2)(A). See 35 U.S.C. 154(b)(1)(B); 35 U.S.C. 145(b)(2)(A); and 37 CFR 1.703(f). In this instance, the 220 days attributable to the delay in issuance of the patent overlaps with the period of 603 days attributable to grounds specified in § 1.702(a)(1). The period of adjustment cannot exceed the actual number of days of delay of 603 days. Accordingly, no additional period of adjustment pursuant to § 1.702(b) was entered.

In view thereof, the patent term adjustment of 603 days indicated in the patent is correct.

The Office acknowledges submission of the $200.00 fee set forth in 37 C.F.R. § 1.18(e). No additional fees are required.

Any response to this decision should indicate in a prominent manner that the attorney handling this matter is Paul Shanoski, and may be submitted by mail[2], hand-delivery[3], or facsimile[4].

Telephone inquiries regarding this decision may directed to Senior Attorney Paul Shanoski at (571) 272-3225[5].

Nancy Johnson
Senior Petitions Attorney
Office of Petitions

---

2 Mail Stop Petition, Commissioner for Patents, United States Patent and Trademark Office, P.O. Box 1450, Alexandria, VA, 22313-1450.
3 Customer Window, Randolph Building, 401 Dulaney Street, Alexandria, VA, 22314.
4 (571) 273-8300- please note this is a central facsimile number.
5 Petitioner will note that all practice before the Office should be in writing, and the action of the Office will be based exclusively on the written record in the Office. See 37 C.F.R. §1.2. As such, Petitioner is reminded that no telephone discussion may be controlling or considered authority for any further action(s) of Petitioner.

UNITED STATES PATENT AND TRADEMARK OFFICE

Commissioner for Patents
United States Patent and Trademark Office
P.O. Box 1450
Alexandria, VA 22313-1450
www.uspto.gov

SCHNECK & SCHNECK
P O BOX 2-E
SAN JOSE, CA 95109-0005

COPY MAILED

APR 13 2005

OFFICE OF PETITIONS

In re Application of
Patrick Q. Moore et al
Application No. 10/413,881
Filed: April 15, 2003
Attorney Docket No. BEC-081

DECISION GRANTING PETITION
UNDER 37 CFR 1.313(c)(2)

This is a decision on the petition, filed April 11, 2005, under 37 CFR 1.313(c)(2) to withdraw the above-identified application from issue after payment of the issue fee.

The petition is **GRANTED**.

The above-identified application is withdrawn from issue for consideration of a submission under 37 CFR 1.114 (request for continued examination). See 37 CFR 1.313(c)(2).

Petitioner is advised that the issue fee paid on March 14, 2005 in the above-identified application cannot be refunded. If, however, the above-identified application is again allowed, petitioner may request that it be applied towards the issue fee required by the new Notice of Allowance.[1]

Telephone inquiries should be directed to the undersigned at (571) 272-3218.

This matter is being referred to Technology Center AU 1723 for processing of the request for continued examination under 37 CFR 1.114.

Frances Hicks
Petitions Examiner
Office of Petitions
Office of the Deputy Commissioner
for Patent Examination Policy

---

[1] *The request to apply the issue fee to the new Notice may be satisfied by completing and returning the new Issue Fee Transmittal Form PTOL-85(b), which includes the following language thereon: "Commissioner for Patents is requested to apply the Issue Fee and Publication Fee (if any) or re-apply any previously paid issue fee to the application identified above." Petitioner is advised that, whether a fee is indicated as being due or not, the Issue Fee Transmittal Form* **must** *be completed and timely submitted to avoid abandonment. Note the language in bold text on the first page of the Notice of Allowance and Fee(s) Due (PTOL-85).*

SPE RESPONSE FOR CERTIFICATE OF CORRECTION

DATE : 9/1/05

Paper No.: —

TO SPE OF : ART UNIT 2823

SUBJECT : Request for Certificate of Correction on Patent No.: 6900070 B2

A response is requested with respect to the accompanying request for a certificate of correction.

Please complete this form and return with file, within **7** days to:
Palm location **7580, Certificates of Correction Branch – South Tower – 9A22**
If response is for an IFW, **return to employee (named below) via PUBSCofC Team in MADRAS.**
With respect to the change(s) requested, correcting Office and/or Applicant's errors, should the patent read as shown in the certificate of correction (COCIN)? No new matter should be introduced, nor should the scope or meaning of the claims be changed.

Virginia Tolbert

Thank You For Your Assistance

Certificates of Correction Branch
Tel. No. 703-308-9390 ext. 113

The request for issuing the above-identified correction(s) is hereby:
Note your decision on the appropriate box.

- ☒ **Approved** — **All** changes apply.
- ☐ **Approved in Part** — Specify below which changes **do not** apply.
- ☐ **Denied** — State the reasons for denial below.

Comments:

The deleted references were printed twice on the patent. One occurrence is needed

SPE — 2823 Art Unit

UNITED STATES PATENT AND TRADEMARK OFFICE

COMMISSIONER FOR PATENTS
UNITED STATES PATENT AND TRADEMARK OFFICE
P.O. BOX 1450
ALEXANDRIA, VA 22313-1450
www.uspto.gov

MAR 19 2004

Paper No. 5

In re Application of	:	
Michael S. Kellogg et al.	:	
Serial No. 10/413,925	:	DECISION ON PETITION
Filed: April 15, 2003	:	TO MAKE SPECIAL
For: COLLAPSIBLE STRUCTURE	:	

Applicant's petition, filed December 12, 2003, seeks to have this application made special pursuant to the Accelerated Examination Program. The petition is GRANTED.

The petition has been reviewed and is found to be in compliance with the requirements for special status as set forth in Section 708.02(VIII) of the Manual of Patent Examining Procedures (MPEP).

Applicant is advised that the examiner's search will be restricted to the subject matter encompassed by the claims. In the event that the application receives a first action rejection, applicant is encouraged to arrange for an interview with the examiner, and to provide the examiner with a working copy of any proposed amendment one working day prior to the interview. Any amendment filed in response to a first action rejection which would require broadening of the field of search will be treated as an improper response.

PETITION GRANTED.

E. Rollins-Cross

E. Rollins-Cross, Director
Technology Center 3700

Ryan Kromholz & Manion, SC
P.O. Box 26618
Milwaukee, WI 53226

UNITED STATES PATENT AND TRADEMARK OFFICE

Commissioner for Patents
United States Patent and Trademark Office
P.O. Box 1450
Alexandria, VA 22313-1450
www.uspto.gov

Paper No. 7

NIRAV D. PARIKH, ESQ., 25-LDP
OWENS-ILLINOIS INC.
ONE SEAGATE
TOLEDO, OH 43666

COPY MAILED

MAY 1 9 2004

OFFICE OF PETITIONS

ON PETITION

In re Application of :
Johnston, et al. :
Application No. 10/413,930 :
Filed: April 15, 2003 :
Attorney Docket No. 17525-01 :

This is a decision on the petition under 37 CFR 1.137(a), filed May 7, 2004, which has been treated as a petition under 37 CFR 1.181, to withdraw the holding of abandonment.

The petition is **dismissed**.

Any request for reconsideration of this decision must be submitted within TWO (2) MONTHS from the mail date of this decision. Extensions of time under 37 CFR 1.136(a) are permitted.

This application became abandoned for failure to timely reply to the Office action mailed September 4, 2003. Accordingly, this application became abandoned at midnight on December 4, 2003. A Notice of Abandonment was mailed on March 30, 2004.

Petitioner asserts that a proper response was in fact timely filed in the form of an amendment on December 5, 2003. In support, Petitioner has submitted a copy of the originally filed amendment and a copy of the postcard receipt that indicates receipt of a "Response to: Office Action Mailed 09/04/03," by the USPTO on December 5, 2003.

However, the Office action was mailed September 4, 2003 and set a shortened statutory period to respond of three (3) months from the mailing date of the Office action. As such, a timely response

had to be filed with the USPTO by midnight of December 4, 2003. As noted on the postcard receipt submitted by the petitioner, the response to the Office action of September 4, 2003 was received by the USPTO on December 5, 2003. Accordingly, the response was not, in fact, timely filed and the petition must be dismissed.

Telephone inquiries concerning this matter may be directed to the undersigned at (703) 306-9200.

Edward J. Tannouse
Petitions Attorney
Office of Petitions
United States Patent and Trademark Office

UNITED STATES PATENT AND TRADEMARK OFFICE

Commissioner for Patents
United States Patent and Trademark Office
P.O. Box 1450
Alexandria, VA 22313-1450
www.uspto.gov

Paper No. 10

COPY MAILED
JUN 2 4 2004
OFFICE OF PETITIONS

NIRAV D. PARIKH, ESQ., 25-LDP
OWENS-ILLINOIS INC.
ONE SEAGATE
TOLEDO, OH 43666

In re Application of	:	
Johnston, et al.	:	
Application No. 10/413,930	:	ON PETITION
Filed: April 15, 2003	:	
Attorney Docket No. 17525-01	:	

This is a decision on the renewed petition under 37 CFR 1.137(a), filed June 15, 2004, to revive the above-identified application.

This application became abandoned for failure to timely reply to the Office action mailed September 4, 2003. Accordingly, this application became abandoned at midnight on December 4, 2003. A Notice of Abandonment was mailed on March 30, 2004.

Petitioner asserts that a proper response was in fact timely filed in the form of an amendment on December 5, 2003. Petitioner claims the amendment contained a properly executed Certificate of Mailing that stated the amendment was mailed on December 3, 2003.

The PTO file is the official record of papers originally filed in the application. Applicant's amendment is not located in the file and is considered missing. However, petitioner has submitted a postcard receipt that indicates the amendment was, in fact, received by the USPTO on December 5, 2003, making the submission of the response untimely. The duplicate copy of the amendment, submitted May 7, 2004, does not contain an executed Certificate of Mailing. Petitioner claims the original amendment, did contain a properly executed Certificate of Mailing that indicated mailing on December 3, 2003. However, petitioner has not provided any documentary evidence to support their claim. Petitioner must submit a copy of the amendment that contains a properly executed Certificate of Mailing as required by 37 CFR 1.8, in order to consider the amendment as timely filed.

Additionally, petitioner requests that a conditional one (1) month extension of time be granted for the submission of the amendment, due to the circumstances of the case. Unfortunately, this is not possible.

Pursuant to 37 CFR 1.136, an extension of time must be filed prior to the expiration of the maximum period obtainable for reply to avoid abandonment. As the maximum period obtainable for reply to avoid abandonment has passed, a request for a one (1) month extension of time can not be granted.

Accordingly, the renewed petition under 37 CFR 1.137(a) must be **dismissed**.

As the petition under 37 CFR 1.137(a) has been dismissed, in the alternative, petitioner requests the instant petition be considered under 37 CFR 1.137(b).

As such, the petition is **granted**.

The $1330.00 petition fee will be charged to deposit account no. 50-0852.

The file is being forwarded to Technology Center 3700 for review of the amendment, filed May 7, 2004.

Telephone inquiries concerning this matter may be directed to the undersigned at (703) 306-9200.

Edward J. Tannouse
Petitions Attorney
Office of Petitions
United States Patent and Trademark Office

UNITED STATES PATENT AND TRADEMARK OFFICE

COMMISSIONER FOR PATENTS
UNITED STATES PATENT AND TRADEMARK OFFICE
P.O. BOX 1450
ALEXANDRIA, VA 22313-1450
www.uspto.gov

RICHARD M. KLEIN
FAY SHARPE ET AL.
SEVENTH FLOOR
1100 SUPERIOR AVENUE
CLEVELAND OH 44114

COPY MAILED

FEB 23 2004

OFFICE OF PETITIONS

In re Application of
John Drake
Application No. 10/413,936
Filed: April 15, 2003
Attorney Docket No DRAZ 2 00003

DECISION GRANTING PETITION

This is a decision on the petition filed January 14, 2004 under 37 CFR 1.10(d), in response to the "Notice of Incomplete Nonprovisional Application, mailed June 17, 2003, and requesting that the above-identified application be accorded a filing date of April 15, 2003 rather than the presently accorded filing date of July 17, 2003. The petition is treated under 37 CFR 1.53(e)(2).

The instant application was deposited with the USPTO on April 15, 2003. On June 17, 2003, the Office of Initial Patent Examination mailed a "Notice of Incomplete Application" indicating that the application was deposited without drawings, that no filing date had been granted and set a two (2) month shortened statutory period for reply.

In response, petitioner submitted five (5) pages of drawings under cover of "Resubmission of Formal Drawings". While a copy of the original date-stamped postcard receipt was included, no petition under 37 CFR 1.53 was filed and the filing date was changed to July 17, 2003, the date the drawings were received.

Subsequently, on October 22, 2003, petitioner filed a request for a corrected filing receipt, for which, on November 7, 2003, the Office of Initial Patent Examination dismissed as and noted that the filing date accorded the application is the date the application met the filing date requirements of 37 CFR 1.53(b) or (c). The decision also noted that to change the filing date, a petition under 37 CFR 1.10, 1.53 or 1.182 plus the appropriate fee would need to be filed.

Comes now the petitioner with the instant petition, which is treated under 37 CFR 1.53, asserting that five (5) sheets of drawings accompanied the application upon filing on April 15, 2003, and submits, *inter alia*, a "legible" postcard receipt in evidence thereof. The postcard receipt, identifies the application and acknowledges, inter alia, the number of drawing sheets to be 5 and bears a United States Patent and Trademark Office date-stamp of April 15, 2003. Further, the postcard receipt lacks any notation of non-receipt of any item listed.

In view of the foregoing, the petition to accord a filing date of April 15, 2003 is **GRANTED** and as such, the filing date will be changed to that of April 15, 2003.

Given the basis for granting the petition, the petition fee in the amount of $130.00 will be credited back to deposit account no. 06-0308.

In view of the above, the alternative petition filed under 37 CFR 1.183 to waive the requirements of 37 CFR 1.10(d) is **DISMISSED** as involving moot issues.

This application is being forwarded to the Office of Initial Patent Examination (OIPE) for a correction of the filing date to April 15, 2003 and for further processing, using the application papers received in the Office on April 15, 2003 and the five (5) sheets of drawings submitted on November 7, 2003 and resubmitted on petition January 14, 2004.

Telephone inquiries regarding this decision should be directed to the undersigned Petitions Attorney at (703) 305-4497.

Patricia Faison-Ball

Patricia Faison-Ball
Senior Petitions Attorney
Office of Petitions

UNITED STATES PATENT AND TRADEMARK OFFICE

Commissioner for Patents
United States Patent and Trademark Office
P.O. Box 1450
Alexandria, VA 22313-1450
www.uspto.gov

MIRUS BIO LLC
545 SCIENCE DRIVE
SUITE A
MADISON WI 53711

MAILED

APR 13 2010

OFFICE OF PETITIONS

In re Application of	:	
Paul M. Slattum, et al.	:	
Application No. 10/413,942	:	DECISION ON PETITION
Filed: April 15, 2003	:	
Attorney Docket No. Mirus.004.01.2	:	

This is a decision on the petition under the unintentional provisions of 37 CFR 1.137(b), filed January 15, 2010, to revive the above-identified application.

The petition is **GRANTED**.

The application became abandoned for failure to reply in a timely manner to the non-final Office action mailed, September 4, 2008, which set a shortened statutory period for reply of three (3) months. No extensions of time under the provisions of 37 CFR 1.136(a) were obtained. Accordingly, the application became abandoned on December 5, 2008. The Notice of Abandonment was mailed March 10, 2009.

The petition satisfies the requirements of 37 CFR 1.137(b) in that petitioner has supplied (1) the reply in the form of an amendment, (2) the petition fee of $810, and (3) a proper statement of unintentional delay.

Telephone inquiries concerning this decision should be directed to Terri Johnson at (571) 272-2991.

This application is being referred to Technology Center AU 1623 for appropriate action by the Examiner in the normal course of business on the reply received.

Terri Johnson

Terri Johnson
Petitions Examiner
Office of Petitions

UNITED STATES PATENT AND TRADEMARK OFFICE

Commissioner for Patents
United States Patent and Trademark Office
P.O. Box 1450
Alexandria, VA 22313-1450
www.uspto.gov

BAKER & BOTTS
30 ROCKEFELLER PLAZA
NEY YORK, NY 10112

MAIL

DEC - 9 2004

DIRECTOR OFFICE
TECHNOLOGY CENTER 2100

In re Application of: Pagnano
Application No. 10/413,959
Filed: April 15, 2003
For: ARRANGEMENTS, STORAGE MEDIUMS, AND METHODS FOR TRANSMITTING A NON-PROPRIETARY LANGUAGE DEVICE DESCRIPTION FILE ASSOCIATED WITH A FIELD DEVICE USING A WEB SERVICE

DECISION ON PETITION FOR ACCELERATED EXAMINATION UNDER M.P.E.P.§708.02(VIII)

This is a decision on the petition filed April 15, 2003 under 37 C.F.R. 102(d) and M.P.E.P. § 708.02(VIII): Accelerated Examination, to make the above-identified application special.

The Petition is **GRANTED**.

M.P.E.P. § 708.02, Section VIII which sets out the prerequisites for a grantable petition for Accelerated Examination under 37 C.F.R. § 102(d) states in relevant part:

A new application (one which has not received any examination by the examiner) may be granted special status provided that applicant (and this term includes applicant's attorney or agent) complies with each of the following items:

(a) Submits a petition to make special accompanied by the fee set forth in **37 CFR 1.17(h)**;

(b) Presents all claims directed to a single invention, or if the Office determines that all the claims presented are not obviously directed to a single invention, will make an election without traverse as a prerequisite to the grant of special status;

(c) Submits a statement(s) that a pre-examination search was made, listing the field of search by class and subclass, publication, Chemical Abstracts, foreign patents, etc. The pre-examination search must be directed to the invention as claimed in the application for which special status is requested. A search made by a foreign patent office satisfies this requirement;

(d) Submits one copy each of the references deemed most closely related to the subject matter encompassed by the claims if said references are not already of record; and

(e) Submits a detailed discussion of the references, which discussion points out, with the particularity required by 37 CFR 1.111 (b) and (c), how the claimed subject matter is patentable over the references.

Petition to Make Special **GRANTED** since all of the requirements for special status under MPEP § 708.02(VIII) have been met.

The application file is being forwarded to the Examiner for accelerated examination in accordance with the procedures set forth in M.P.E.P. §708.02, Section VIII. If the application is subsequently allowed, it will be given priority for printing. See M.P.E.P. §1309.

12/3/04

Brian L. Johnson
Special Program Examiner
Technology Center 2100
Computer Architecture, Software and Information Security
571-272-3595

MBS

Pet. Dec.

OIPE JC95 AUG 2 5 2004 PATENT & TRADEMARK OFFICE

PATENT

Express Mail Label No. EU983563810US
Customer No. 28564

JC971 U.S. PTO 10/413988 04/15/03

IN THE UNITED STATES PATENT AND TRADEMARK OFFICE

In re application of: Art Unit: Not yet assigned

DAVIS, Clyde E.

Application No.: Not yet assigned

Filed: April 15, 2003

For: POLYMERIZATION OF VARIOUS SILICIC ACIDS ON BIOLOGICAL TEMPLATES

Examiner: Not yet assigned

Date: April 15, 2003

PETITION TO MAKE SPECIAL
PURSUANT TO 37 C.F.R. § 1.102(c)

TO THE COMMISSIONER FOR PATENTS
WASHINGTON, D.C. 20231

Sir:

Applicant respectfully requests that pursuant to 37 C.F.R. 1.102(c), the patent application being filed concurrently herewith, entitled "Polymerization of various silicic acids on biological templates," be advanced out of turn for expedited examination on the basis that Applicant is presently over the age of 65 years.

Respectfully submitted,

Clyde E. Davis

Clyde E. Davis (Applicant pro se)

SN 10/413988
PETITION GRANTED

R Crispino

Richard Crispino
Special Program Examiner
TC 1700

11/19/04

BEST AVAILABLE COPY

UNITED STATES PATENT AND TRADEMARK OFFICE

COMMISSIONER FOR PATENT
UNITED STATES PATENT AND TRADEMARK OFFIC
P.O. BOX 1450
ALEXANDRIA, VA 22313-1450
WWW.USPTO.GO

Paper No. 3

ROGER BROWDY
BROWDY AND NEIMARK, P.L.L.C.
624 NINTH STREET, N.W.
SUITE 300
WASHINGTON, DC 20001

COPY MAILED

JUL 0 2 2003

OFFICE OF PETITIONS

In re Application of :
Avigdor Scherz et al :
Application No. 10/414,007 : NOTICE
Filed: April 16, 2003 :
Attorney Docket No. :

This is a notice regarding your request for acceptance of a fee deficiency submission under 37 CFR 1.28. On September 1, 1998, the Court of Appeals for the Federal Circuit held that 37 CFR 1.28(c) is the sole provision governing the time for correction of the erroneous payment of the issue fee as a small entity. **See DH Technology v. Synergystex International, Inc. 154 F.3d 1333, 47 USPQ2d 1865 (Fed. Cir. Sept. 1, 1998).**

The Office no longer investigates or rejects original or reissue applications under 37 CFR 1.56. **1098 Off. Gaz. Pat. Office 502 (January 3, 1989)**. Therefore, nothing in this Notice is intended to imply that an investigation was done.

Your fee deficiency submission under 37 CFR 1.28 is hereby **ACCEPTED**.

Inquiries related to this communication should be directed to the Office of Petitions Staff at (703) 305-9285.

This file is being forwarded to the Initial Patent Examination Unit.

Irvin Dingle
Petitions Examiner
Office of Petitions
Office of the Deputy Commissioner
for Patent Examination Policy

SPE RESPONSE FOR CERTIFICATE OF CORRECTION

Paper No.: _____

DATE : 07/17/07

TO SPE OF : ART UNIT 3683

SUBJECT : Request for Certificate of Correction for Appl. No.: **10/414052** Patent No.: **7226044**

Please respond to this request for a certificate of correction within 7 days.

Please review the requested changes/corrections as shown in the **COCIN** document(s) in the IFW application image. No new matter should be introduced, nor should the scope or meaning of the claims be changed.

Please complete the response (see below) and forward the completed response to scanning using document code **COCX**.

A Green

Angela Green
Certificates of Correction Branch
703.308.9380 ext. 123

Thank You For Your Assistance

The request for issuing the above-identified correction(s) is hereby:
Note your decision on the appropriate box.

- ☒ **Approved** — All changes apply.
- ☐ **Approved in Part** — Specify below which changes **do not** apply.
- ☐ **Denied** — State the reasons for denial below.

Comments: _____

Robert A Siconolfi
SPE

3683
Art Unit

UNITED STATES PATENT AND TRADEMARK OFFICE

Commissioner for Patents
United States Patent and Trademark Office
P.O. Box 1450
Alexandria, VA 22313-1450
www.uspto.gov

GREENBLUM & BERNSTEIN
1950 ROLAND CLARKE PLACE
RESTON VA 20191

COPY MAILED

JAN 1 1 2006

OFFICE OF PETITIONS

In re Application of :
Franz Dobesberger et al :
Application No. 10/414,096 : ON PETITION
Filed: April 16, 2003 :
Attorney Docket No. P23533 :

This is a decision on the petition, filed January 9, 2006, under 37 CFR 1.313(c)(2) to withdraw the above-identified application from issue after payment of the issue fee.

The petition is **GRANTED**.

The above-identified application is withdrawn from issue for consideration of a submission under 37 CFR 1.114 (request for continued examination). See 37 CFR 1.313(c)(2).

Petitioner is advised that the issue fee paid on September 23, 2005 in the above-identified application cannot be refunded. If, however, the above-identified application is again allowed, petitioner may request that it be applied towards the issue fee required by the new Notice of Allowance.[1]

Telephone inquiries should be directed to the undersigned at (571) 272-3208.

The examiner of Technology Center AU 1775 will consider the request for continued examination under 37 CFR 1.114.

Karen Creasy

Karen Creasy
Petitions Examiner
Office of Petitions
Office of the Deputy Commissioner
for Patent Examination Policy

---

[1] The request to apply the issue fee to the new Notice may be satisfied by completing and returning the new Issue Fee Transmittal Form PTOL-85(b), which includes the following language thereon: "Commissioner for Patents is requested to apply the Issue Fee and Publication Fee (if any) or re-apply any previously paid issue fee to the application identified above." Petitioner is advised that, whether a fee is indicated as being due or not, the Issue Fee Transmittal Form **must** be completed and timely submitted to avoid abandonment. Note the language in bold text on the first page of the Notice of Allowance and Fee(s) Due (PTOL-85).

UNITED STATES PATENT AND TRADEMARK OFFICE

Commissioner for Patents
United States Patent and Trademark Office
P.O. Box 1450
Alexandria, VA 22313-1450
www.uspto.gov

FITZPATRICK, CELLA, HARPER & SCINTO
30 Rockefeller Plaza\
New York, New York 10112-3800

MAILED

DEC 0 7 2006

DIRECTOR'S OFFICE
TECHNOLOGY CENTER 2600

In re Application of	:	
Seiya Fujinaga	:	DECISION ON REQUEST TO
Application No. 10/414098	:	PARTICIPATE IN PATENT
Filed: April 16, 2003	:	PROSECUTION HIGHWAY
Attorney Docket No. 00862.023006	:	PILOT PROGRAM AND PETITION
	:	TO MAKE SPECIAL UNDER
	:	37 CFR 1.102(d)

This is a decision on the request to participate in the Patent Prosecution Highway (PPH) pilot program and the petition under 37 CFR 1.102(d), filed November 21, 2006, to make the above-identified application special.

The request and petition are **GRANTED**.

A grantable request to participate in the PPH pilot program and petition to make special require:

(1) The U.S. application must validly claim priority under 35 U.S.C. 119(a) to one or more applications filed in the JPO;
(2) Applicant must submit a copy of the allowable/patentable claim(s) from the JPO application(s) along with an English translation thereof and a statement that the English translation is accurate;
(3) All the claims in the U.S. application must sufficiently correspond or be amended to sufficiently correspond to the allowable/patentable claim(s) in the JPO application(s);
(4) Examination of the U.S. application has not begun;
(5) Applicant must submit a copy of all the office actions from each of the JPO application(s) containing the allowable/patentable claim(s) along with an English translation thereof and a statement that the English translation is accurate;
(6) Applicant must submit an IDS listing the documents cited by the JPO examiner in the JPO office action along with copies of documents except U.S. patents or U.S. patent application publications; and
(7) The required petition fee under 37 CFR 1.17(h).

The request to participate in the PPH pilot program and petition comply with the above requirements. Accordingly, the above-identified application has been accorded "special" status.

Telephone inquiries concerning this decision should be directed to John Peng at 571-272-7272.

All other inquiries concerning the examination or status of the application should be directed to Patent Application Information Retrieval (PAIR) system.

The application is being forwarded to the examiner for action on the merits commensurate with this decision.

John Peng
TC 2600
Quality Assurance Specialist

UNITED STATES PATENT AND TRADEMARK OFFICE

Commissioner for Patents
United States Patent and Trademark Office
P.O. Box 1450
Alexandria, VA 22313-1450
www.uspto.gov

MAILED

DEC 2 6 2006

DIRECTOR'S OFFICE
TECHNOLOGY CENTER 2600

FITZPATRICK, CELLA, HARPER & SCINTO
30 Rockefeller Plaza
New York, New York 10112-3800

In re Application of	:	
Seiya Fujinaga	:	DECISION ON REQUEST TO
Application No. 10/414098	:	PARTICIPATE IN PATENT
Filed: April 16, 2003	:	PROSECUTION HIGHWAY
Attorney Docket No. 00862.023006	:	PILOT PROGRAM AND PETITION
	:	TO MAKE SPECIAL UNDER
	:	37 CFR 1.102(d)

This is a decision on the request to participate in the Patent Prosecution Highway (PPH) pilot program and the petition under 37 CFR 1.102(d), filed November 21, 2006, to make the above-identified application special.

The request and petition are **DISMISSED**.

A grantable request to participate in the PPH pilot program and petition to make special require:

(1) The U.S. application must validly claim priority under 35 U.S.C. 119(a) to one or more applications filed in the JPO;
(2) Applicant must submit a copy of the allowable/patentable claim(s) from the JPO application(s) along with an English translation thereof and a statement that the English translation is accurate;
(3) All the claims in the U.S. application must sufficiently correspond or be amended to sufficiently correspond to the allowable/patentable claim(s) in the JPO application(s);
(4) Examination of the U.S. application has not begun;
(5) Applicant must submit a copy of all the office actions from each of the JPO application(s) containing the allowable/patentable claim(s) along with an English translation thereof and a statement that the English translation is accurate;
(6) Applicant must submit an IDS listing the documents cited by the JPO examiner in the JPO office action along with copies of documents except U.S. patents or U.S. patent application publications; and
(7) The required petition fee under 37 CFR 1.17(h).

The request to participate in the PPH pilot program and petition fail to include:

Item 4 above. Record shows that there was an Office Action mailed on 12/4/06 of the above application. Since the examination of the above application has begun, the Grant decision mailed on 12/7/06 is hereby withdrawn.

Applicant is given a time period of **ONE MONTH or THIRTY DAYS**, whichever is longer, from the mailing date of this decision to correct the deficiencies. **NO EXTENSION OF TIME UNDER 37 CFR 1.136 IS PERMITTED.** If the deficiencies are not corrected with the time period given, the application will await action in its regular turn.

Response must be faxed to John Peng at 571-273-7272 (RightFax) or 571-273-0308.

Telephone inquiries concerning this decision should be directed to John Peng at 571-272-7272.

All other inquiries concerning the examination or status of the application should be directed to Patent Application Information Retrieval (PAIR) system.

John Peng
TC 2600
Quality Assurance Specialist

UNITED STATES PATENT AND TRADEMARK OFFICE

Commissioner for Patents
United States Patent and Trademark Office
P.O. Box 1450
Alexandria, VA 22313-1450
www.uspto.gov

GREENBLUM & BERNSTEIN
1950 ROLAND CLARKE PLACE
RESTON VA 20191

COPY MAILED

MAY 2 4 2004

OFFICE OF PETITIONS

ON PETITION

In re Application of :
Masaru Eguchi :
Application No. 10/414,103 :
Filed: April 16, 2003 :
Attorney Docket No. P23171 :

This is a decision on the petition, filed May 21, 2004, under 37 CFR 1.313(c)(2) to withdraw the above-identified application from issue after payment of the issue fee.

The petition is **GRANTED**.

The above-identified application is withdrawn from issue for consideration of a submission under 37 CFR 1.114 (request for continued examination). See 37 CFR 1.313(c)(2).

Petitioner is advised that the issue fee paid on March 22, 2004 in the above-identified application cannot be refunded. If, however, the above-identified application is again allowed, petitioner may request that it be applied towards the issue fee required by the new Notice of Allowance.[1]

Telephone inquiries should be directed to the undersigned at (703) 305-8859.

The examiner of Technology Center AU 2873 will consider the request for continued examination under 37 CFR 1.114.

Karen Creasy

Karen Creasy
Petitions Examiner
Office of Petitions
Office of the Deputy Commissioner
for Patent Examination Policy

---

[1] The request to apply the issue fee to the new Notice may be satisfied by completing and returning the new Issue Fee Transmittal Form PTOL-85(b), which includes the following language thereon: "Commissioner for Patents is requested to apply the Issue Fee and Publication Fee (if any) or re-apply any previously paid issue fee to the application identified above." Petitioner is advised that, whether a fee is indicated as being due or not, the Issue Fee Transmittal Form **must** be completed and timely submitted to avoid abandonment. Note the language in bold text on the first page of the Notice of Allowance and Fee(s) Due (PTOL-85).

UNITED STATES PATENT AND TRADEMARK OFFICE

COMMISSIONER FOR PATENTS
UNITED STATES PATENT AND TRADEMARK OFFICE
P.O. BOX 1450
ALEXANDRIA, VA 22313-1450
WWW.USPTO.GOV

Paper No.

BRUCE H. TROXELL
SUITE 1404
5205 LEESBURG PIKE
FALLS CHURCH VA 22041

COPY MAILED

JUN 16 2008

OFFICE OF PETITIONS

In re Application of :
Wei-Ting Chen et al. :
Application No. 10/414,110 :
Filed: April 16, 2003 :
Attorney Docket No. BHT-3167-107 :
Title: APPARATUS AND METHOD FOR CLEANING A GLASS SUBSTRATE BEFORE PHOTORESIST COATING :

DECISION ON PETITION PURSUANT TO 37 C.F.R. § 1.137(B)

This is a decision on the petition filed March 24, 2008, pursuant to 37 C.F.R. § 1.137(b), to revive the above-identified application.

The above-identified application became abandoned for failure to submit the issue and publication fees in a timely manner in reply to the Notice of Allowance and Issue Fee Due, mailed December 20, 2007, which set a shortened statutory period for reply of three months. No extensions of time are permitted for transmitting issue or publication fees[1]. Accordingly, the above-identified application became abandoned on March 21, 2008. A Notice of Abandonment was mailed on April 25, 2008.

A grantable petition pursuant to 37 C.F.R. § 1.137(b) must be accompanied by:

(1) The reply required to the outstanding Office

1 See MPEP § 710.02(e).

action or notice, unless previously filed;

(2) The petition fee as set forth in 37 C.F.R. § 1.17(m);

(3) A statement that the entire delay in filing the required reply from the due date for the reply until the filing of a grantable petition pursuant to this paragraph was unintentional. The Commissioner may require additional information where there is a question whether the delay was unintentional, and;

(4) Any terminal disclaimer (and fee as set forth in 37 C.F.R. § 1.20(d)) required pursuant to paragraph (d) of this section.

With this petition, Petitioner has included the petition, issue, and publication fees, along with the proper statement of unintentional delay. As such, the first three requirements of Rule 1.137(b) have been met.

The fourth requirement of Rule 1.137(b) is not applicable, as a terminal disclaimer is not required.

It is noted that although this petition was executed by an attorney of record, the address listed on the petition differs from the address of record. The application file does not indicate a change of correspondence address has been filed in this case, although the address given on the petition differs from the address of record. If Petitioner desires to receive future correspondence regarding this application, the change of correspondence address must be submitted. A courtesy copy of this decision will be mailed to Petitioner. However, all future correspondence will be directed to the address of record until such time as appropriate instructions are received to the contrary. Petitioner will not receive future correspondence related to this application unless Change of Correspondence Address, Patent Form (PTO/SB/122) is submitted for the above-identified application. For Petitioner's convenience, a blank Change of Correspondence Address, Patent Form (PTO/SB/122), may be found at http://www.uspto.gov/web/forms/sb0122.pdf.

Pursuant to this decision, the Office of Patent Publication will be notified of this decision so that the present application can be processed into a patent.

Petitioner may find it beneficial to view Private PAIR within a fortnight of the present decision to ensure that the revival has been acknowledged by the Office of Patent Publication in response

to this decision. It is noted that all inquiries with regard to any failure of that change in status should be directed to the Office of Patent Publication where that change of status must be effected - **the Office of Petitions cannot effectuate a change of status**.

Telephone inquiries regarding *this decision* should be directed to the undersigned at (571) 272-3225[2]. All other inquiries concerning the status of the application should be directed to the Office of Patent Publication at 571-272-4200.

/Paul Shanoski/
Paul Shanoski
Senior Attorney
Office of Petitions

---

2 Petitioner will note that all practice before the Office should be in writing, and the action of the Office will be based exclusively on the written record in the Office. See 37 C.F.R. § 1.2. As such, Petitioner is reminded that no telephone discussion may be controlling or considered authority for any further action(s) of Petitioner.

SPE RESPONSE FOR CERTIFICATE OF CORRECTION

Paper No.:20060329

DATE : March 29, 2006

TO SPE OF : ART UNIT 1725

SUBJECT : Request for Certificate of Correction on Patent No.: 6,906,286

A response is requested with respect to the accompanying request for a certificate of correction.

Please complete this form and return with file, within **7** days to:
Certificates of Correction Branch - PK 3-910
Palm location **7590** - Tel. No. 305-8201

With respect to the change(s) requested, correcting Office and/or Applicant's errors, should the patent read as shown in the certificate of correction? No new matter should be introduced, nor should the scope or meaning of the claims be changed.

Thank You For Your Assistance **Certificates of Correction Branch**

The request for issuing the above-identified correction(s) is hereby:
Note your decision on the appropriate box.

☒ **Approved** **All** changes apply.

☐ **Approved in Part** Specify below which changes **do not** apply.

☐ **Denied** State the reasons for denial below.

Comments:

changes are typographical in nature

SPE: Patrick J. Ryan **Art Unit** 1725

UNITED STATES PATENT AND TRADEMARK OFFICE

UNITED STATES DEPARTMENT OF COMMERCE
United States Patent and Trademark Office
Address: COMMISSIONER FOR PATENTS
P.O. Box 1450
Alexandria, Virginia 22313-1450
www.uspto.gov

SCHWABE, WILLIAMSON & WYATT, P.C.
1420 FIFTH, SUITE 3010
SEATTLE, WA 98101

Mail Date: 04/21/2010

Applicant	: I. Claude Denton	: DECISION ON REQUEST FOR
Patent Number	: 7570650	: RECALCULATION of PATENT
Issue Date	: 08/04/2009	: TERM ADJUSTMENT IN VIEW
Appliction No	: 10/414,115	: OF WYETH AND NOTICE OF INTENT TO
Filed	: 04/14/2003	: ISSUE CERTIFICATE OF CORRECTION
		:

The Request for Recalculation is **GRANTED** to the extent indicated.

The patent term adjustment has been determined to be **1877** days. The USPTO will *sua sponte* issue a certificate of correction reflecting the amount of PTA days determined by the recalculation.

Prior to the issuance of the certificate of correction, the USPTO will afford patentee an opportunity to be heard and request reconsideration. Accordingly, patentee has **one month or thirty (30) days**, whichever is longer, to file a request for reconsideration of this patent term adjustment calculation. See 35 U.S.C. 154(b)(3)(B)(ii) and 37 CFR 1.322(a)(4). No extensions of time will be granted under 37 CFR 1.136.

Patentee should use document code PET.OP if electronically filing a request for reconsideration of this patent term adjustment calculation. The patentee must also include the information required by 37 CFR 1.705(b)(2) and the fee required by 37 CFR 1.18(e). If patentee does not file a timely request for reconsideration of this patent term adjustment calculation including the information required by 37 CFR 1.705(b)(2) and the fee required by 37 CFR 1.18(e), the USPTO will issue a certificate of correction reflecting the PTA determination noted above.

Patentee should be aware that in order to preserve the right to review in the United States District Court for the District of Columbia of the USPTO patent term adjustment determination, patentee must ensure that he or she also take the steps required under 35 U.S.C. 154(b)(4)(A) in a timely manner. Nothing in the request for recalculation should be construed as providing an alternative time frame for commencing a civil action under 35 U.S.C. 154(b)(4)(A).

Any questions concerning this decision should be directed to the Office of Patent Legal Administration at 571-272-7702.

SPE RESPONSE FOR CERTIFICATE OF CORRECTION

Paper No.: _____

DATE : 05-02-09

TO SPE OF : ART UNIT 2416

SUBJECT : Request for Certificate of Correction for Appl. No.: 10/414125 Patent No.: 7496074

Please respond to this request for a certificate of correction within 7 days.

FOR IFW FILES:

Please review the requested changes/corrections as shown in the **COCIN** document(s) in the IFW application image. No new matter should be introduced, nor should the scope or meaning of the claims be changed.

Please complete the response (see below) and forward the completed response to scanning using document code **COCX**.

FOR PAPER FILES:

Please review the requested changes/corrections as shown in the attached certificate of correction. Please complete this form (see below) and forward it with the file to:

Certificates of Correction Branch (CofC)
South Tower - 9A22
Palm Location 7580

Angela Green
Certificates of Correction Branch
703-756-1541

Thank You For Your Assistance

The request for issuing the above-identified correction(s) is hereby:
Note your decision on the appropriate box.

- ☒ **Approved** — All changes apply.
- ☐ **Approved in Part** — Specify below which changes **do not** apply.
- ☐ **Denied** — State the reasons for denial below.

Comments: _____

WILLIAM TROST
SUPERVISORY PATENT EXAMINER
TECHNOLOGY CENTER 2600

SPE

2416
Art Unit

UNITED STATES PATENT AND TRADEMARK OFFICE

Commissioner for Patents
United States Patent and Trademark Office
P.O. Box 1450
Alexandria, VA 22313-1450
www.uspto.gov

Patent No. : 6,839,281 B2
Ser. No. : 10/414,132
Inventor(s) : Chen, et. al.
Issued : January 4, 2005
Title : READ AND ERASE VERIFY METHODS AND CIRCUITS SUITABEL FO RLOW VOLTAGE NON-VOLATILE MEMORIES
Docket No. : SNDK.284US0

Re: Request for Certificate of Correction

Consideration has been given your request for the issuance of a certificate of correction for the above-identified patent under the provisions of Rule(s) 1.322.

Assignees' names and addresses (assignment data) printed in a patent, are based *solely* on information supplied in the appropriate space for identifying the assignment data, i.e., item 3 of the Issue Fee Transmittal Form PTOL-85B. Granting of a request under 37 CFR 3.81(b) is required to correct applicant's error providing ***incorrect or erroneous*** assignment data, *before* issuance of a Certificate of Correction, under 37 CFR 1.323 *(see Manual of Patent Examining Procedures (M.P.E.P) Chp.1400, sect. 1481).* This procedure is required *at any time after the issue fee is paid*, including after issuance of the patent.

In view of the foregoing, your request is hereby denied.

A request to correct the Assignee under 37 CFR 3.81(b) should include:

A. **the processing fee set forth in 37 CFR 1.117(h) (currently $130);**
B. a statement that the failure to include the correct assignee name on the PTOL-85B was inadvertent; and
C. a copy of the Notice of Recordation of Assignment Document, reflecting the reel and frame number where the assignment(s) is recorded and/or reflecting proof of *the date* the assignment was submitted for recordation.

In the Request, Applicant(s) may request that the file be forwarded to Certificates of Correction Branch, for issuance of a Certificate of Correction, if the Request is granted.

Any request under 37 CFR 3.81(b) should be directed to the following address or facsimile number:

By mail: Mail Stop PETITIONS
Commissioner for Patents
Post Office Box 1450
Alexandria, VA 22313-1450

By hand: Customer Service Window
Mail Stop Petitions
Randolph Building
40l Dulany Street
Alexandria, VA 22314

By fax: (703) 872-9306
ATTN: Office of Petitions

If a fee (currently $100) was previously submitted for consideration of a Request for Certificate of Correction, under CFR 1.323, to correct assignment data, , no additional fee is required.

Eva James
For Cecelia Newman
Decisions & Certificates
of Correction Branch
(703) **308-9390 ext. 124** or (703) 308-9390 ext. 102

Gerald P. Parsons
Parsons Hsue & DE Runtz LLP
655 Montgomery Street, Suite 1800
San Francisco, CA 94111

ej

UNITED STATES PATENT AND TRADEMARK OFFICE

4-21-06

Commissioner for Patents
United States Patent and Trademark Office
P.O. Box 1450
Alexandria, VA 22313-1450
www.uspto.gov

Patent No. : 6,839,281 B2
Ser. No. : 10/414,132
Inventor(s) : Chen, et. al.
Issued : January 4, 2005
Title : READ AND ERASE VERIFY METHODS AND CIRCUITS SUITABEL FO RLOW VOLTAGE NON-VOLATILE MEMORIES
Docket No. : SNDK.284US0

Re: Request for Certificate of Correction

Consideration has been given your request for the issuance of a certificate of correction for the above-identified patent under the provisions of Rule(s) 1.322.

Assignees' names and addresses (assignment data) printed in a patent, are based *solely* on information supplied in the appropriate space for identifying the assignment data, i.e., item 3 of the Issue Fee Transmittal Form PTOL-85B. Granting of a request under 37 CFR 3.81(b) is required to correct applicant's error providing ***incorrect or erroneous*** assignment data, *before* issuance of a Certificate of Correction, under 37 CFR 1.323 *(see Manual of Patent Examining Procedures (M.P.E.P) Chp.1400, sect. 1481).* This procedure is required *at any time after the issue fee is paid,* including after issuance of the patent.

In view of the foregoing, your request is hereby denied.

A request to correct the Assignee under 37 CFR 3.81(b) should include:

A. **the processing fee set forth in 37 CFR 1.117(h) (currently $130);**
B. a statement that the failure to include the correct assignee name on the PTOL-85B was inadvertent; and
C. a copy of the Notice of Recordation of Assignment Document, reflecting the reel and frame number where the assignment(s) is recorded and/or reflecting proof of *the date* the assignment was submitted for recordation.

In the Request, Applicant(s) may request that the file be forwarded to Certificates of Correction Branch, for issuance of a Certificate of Correction, if the Request is granted.

Any request under 37 CFR 3.81(b) should be directed to the following address or facsimile number:

By mail: Mail Stop PETITIONS
Commissioner for Patents
Post Office Box 1450
Alexandria, VA 22313-1450

By hand: Customer Service Window
Mail Stop Petitions
Randolph Building
401 Dulany Street
Alexandria, VA 22314

By fax: (703) 872-9306
ATTN: Office of Petitions

If a fee (currently $100) was previously submitted for consideration of a Request for Certificate of Correction, under CFR 1.323, to correct assignment data, , no additional fee is required.

Eva James
For Cecelia Newman
Decisions & Certificates
of Correction Branch
(703) **308-9390 ext. 124** or (703) 308-9390 ext. 102

Gerald P. Parsons
Parsons Hsue & DE Runtz LLP
655 Montgomery Street, Suite 1800
San Francisco, CA 94111

ej

UNITED STATES PATENT AND TRADEMARK OFFICE

Commissioner for Patents
United States Patent and Trademark Office
P.O. Box 1450
Alexandria, VA 22313-1450
www.uspto.gov

COUDERT BROTHERS LLP
333 SOUTH HOPE STREET
23RD FLOOR
LOS ANGELES CA 90071

COPY MAILED

JUN 2 0 2005

OFFICE OF PETITIONS

In re Application of	:	
William J. Grothe et al	:	
Application No. 10/414,148	:	ON PETITION
Filed: April 14, 2003	:	
Attorney Docket No. 21164-0033	:	

This is a decision on the petition under 37 CFR 1.137(b), filed March 10, 2005, to revive the above-identified application.

The petition is **GRANTED**.

The above-identified application became abandoned for failure to submit the issue fee and publication fee in a timely manner in reply to the Notice of Allowance mailed April 21, 2004, which set a statutory period for reply of three (3) months. Accordingly, the above-identified application became abandoned on July 22, 2004.

There is no indication that petitioner has submitted an Issue Fee Transmittal Form (PTOL-85(b). Accordingly, if petitioner desires to have the information normally found thereon printed on the patent, the attached blank Issue Fee Transmittal Form should be completed and returned to the Publishing Division within **ONE MONTH** from the mail date of this decision.

Telephone inquiries concerning this decision should be directed to the undersigned at (571) 272-3208.

This matter is being referred to Patent Publication.

Karen Creasy

Karen Creasy
Petitions Examiner
Office of Petitions
Office of the Deputy Commissioner
for Patent Examination Policy

ATTACHMENT: Blank Issue Fee Transmittal Form (PTOL-85b)

UNITED STATES PATENT AND TRADEMARK OFFICE

Commissioner for Patents
United States Patent and Trademark Office
P.O. Box 1450
Alexandria, VA 22313-1450
www.uspto.gov

John S. Artz
Artz & Artz, P. C.
28333 Telegraph Road
Suite 250
Southfield, MI 48034

COPY MAILED

OCT 28 2005

OFFICE OF PETITIONS

In re Patent No. 6,902,501 :
Issue Date: June 7, 2005 :
Application No. 10/414,178 : NOTICE
Filed: April 15, 2003 :
Attorney Docket No. WLI 1128 PUS :

This is a notice regarding your request for acceptance of a fee deficiency submission under 37 CFR 1.28. On September 1, 1998, the Court of Appeals for the Federal Circuit held that 37 CFR 1.28(c) is the sole provision governing the time for correction of the erroneous payment of the issue fee as a small entity. **See DH Technology v. Synergystex International, Inc. 154 F.3d 1333, 47 USPQ2d 1865 (Fed. Cir. Sept. 1, 1998).**

The Office no longer investigates or rejects original or reissue applications under 37 CFR 1.56. **1098 Off. Gaz. Pat. Office 502 (January 3, 1989)**. Therefore, nothing in this Notice is intended to imply that an investigation was done.

Your fee deficiency submission under 37 CFR 1.28 is hereby **ACCEPTED**.

This application is no longer entitled to small entity status. Accordingly, all future fees paid in this application must be paid at the large entity rate.

Inquiries related to this communication should be directed to the undersigned at (571) 272-3223.

Marianne E. Jenkins

Marianne E. Jenkins
Petitions Examiner
Office of Petitions

UNITED STATES PATENT AND TRADEMARK OFFICE

Commissioner for Patents
United States Patent and Trademark Office
P.O. Box 1450
Alexandria, VA 22313-1450
www.uspto.gov

MORTON J. ROSENBERG
ROSENBERG KLEIN & LEE
3458 ELLICOTT CENTER DRIVE
ELLICOTT CITY, MD 21043

COPY MAILED

APR 21 2004

OFFICE OF PETITIONS

In re Application of :
Chyi-Hung Lin et al :
Application No. 10/414,215 :
Filed: April 16, 2003 :
Attorney Docket No. MR3029-70

NOTICE

This is a notice regarding your request for acceptance of a fee deficiency submission under 37 CFR 1.28. On September 1, 1998, the Court of Appeals for the Federal Circuit held that 37 CFR 1.28(c) is the sole provision governing the time for correction of the erroneous payment of the issue fee as a small entity. **See DH Technology v. Synergystex International, Inc. 154 F.3d 1333, 47 USPQ2d 1865 (Fed. Cir. Sept. 1, 1998).**

The Office no longer investigates or rejects original or reissue applications under 37 CFR 1.56. **1098 Off. Gaz. Pat. Office 502 (January 3, 1989)**. Therefore, nothing in this Notice is intended to imply that an investigation was done.

Your fee deficiency submission under 37 CFR 1.28 is hereby **ACCEPTED**.

Inquiries related to this communication should be directed to the Office of Petitions Staff at (703) 305-9285.

This file is being forwarded to Technology Center 1773.

Irvin Dingle
Petitions Examiner
Office of Petitions
Office of the Deputy Commissioner
for Patent Examination Policy

UNITED STATES PATENT AND TRADEMARK OFFICE

Commissioner for Patents
United States Patent and Trademark Office
P.O. Box 1450
Alexandria, VA 22313-1450
www.uspto.gov

BIRCH STEWART KOLASCH & BIRCH
PO BOX 747
FALLS CHURCH VA 22040-0747

COPY MAILED

MAR 0 5 2007

OFFICE OF PETITIONS

NOTICE

In re Patent No. 6,830,168 :
Issue Date: December 14, 2004 :
Application No. 10/414,220 :
Filed: April 16, 2003 :
Attorney Docket No.: 3313-0956P :

This is a notice regarding your request for acceptance of a fee deficiency submission under 37 CFR 1.28. On September 1, 1998, the Court of Appeals for the Federal Circuit held that 37 CFR 1.28(c) is the sole provision governing the time for correction of the erroneous payment of the issue fee as a small entity. **See DH Technology v. Synergystex International, Inc. 154 F.3d 1333, 47 USPQ2d 1865 (Fed. Cir. Sept. 1, 1998).**

The Office no longer investigates or rejects original or reissue applications under 37 CFR 1.56. **1098 Off. Gaz. Pat. Office 502 (January 3, 1989)**. Therefore, nothing in this Notice is intended to imply that an investigation was done.

Your fee deficiency submission under 37 CFR 1.28 is hereby **ACCEPTED**.

This application is no longer entitled to small entity status. Accordingly, all future fees paid in this application must be paid at the large entity rate.

Inquiries related to this communication should be directed to the undersigned at (571) 272-3205.

Alesia M. Brown
Petitions Attorney
Office of Petitions

UNITED STATES PATENT AND TRADEMARK OFFICE

Commissioner for Patents
United States Patent and Trademark Office
P.O. Box 1450
Alexandria, VA 22313-1450
www.uspto.gov

LAHIVE & COCKFIELD, LLP/THE MATHWORKS
One Post Office Square
Boston MA 02109-2127

COPY MAILED

MAR 20 2008

In re Application of	:	
Charles Devane	:	
Application No. 10/414,250	:	DECISION ON PETITION
Filed: April 15, 2003	:	
Attorney Docket No. MWS-046	:	

This is a decision on the petition, filed February 11, 2008, which is being treated as a petition under 37 CFR 1.181 (no fee) requesting withdrawal of the holding of abandonment in the above-identified application.

The petition is **GRANTED**.

This application was held abandoned for failure to reply to the non final Office action mailed July 24, 2007, which set a three (3) month shortened statutory period for reply. A Notice of Abandonment was mailed on February 7, 2008.

Petitioner asserts that the Office action dated July 24, 2007 was not received.

A review of the written record indicates no irregularity in the mailing of the Office action, and, in the absence of any irregularity, there is a strong presumption that the Office action was properly mailed to the practitioner at the address of record. This presumption may be overcome by a showing that the Office action was not in fact received. In this regard, the showing required to establish the failure to receive the Office action must consist of the following:

1. a statement from practitioner stating that the Office action was not received by the practitioner;

2. a statement from the practitioner attesting to the fact that a search of the file jacket and docket records indicates that the Office action was not received; and

3. a copy of the docket record where the nonreceived Office action would have been entered had it been received and docketed must be attached to and referenced in the practitioner's statement.

See MPEP § 711.03(c) under subheading "Petition to Withdraw Holding of Abandonment Based on Failure to Receive Office Action," and "Withdrawing the Holding of Abandonment When Office Actions Are Not Received," 1156 Official Gazette 53 (November 16, 1993).

The petition satisfies the above-stated requirements. Accordingly, the application was not abandoned in fact.

In view of the above, the Notice of Abandonment is hereby vacated and the holding of abandonment withdrawn.

There is no indication that the person signing the petition was ever given a power of attorney to prosecute the application. If the person signing the petition desires to receive future correspondence regarding this application, the appropriate power of attorney documents must be submitted.

In light of the submission of a reply to the non-final Office action, the July 24, 2007 Office action does not need to be re-mailed.

This application is being referred to Art Unit 2192 for processing of the amendment submitted on February 11, 2008 in the normal course of business.

Charlema Grant

Charlema Grant
Petitions Attorney
Office of Petitions

UNITED STATES PATENT AND TRADEMARK OFFICE

Commissioner for Patents
United States Patent and Trademark Office
P.O. Box 1450
Alexandria, VA 22313-1450
www.uspto.gov

LACKENBACH SIEGEL LLP
LACKENBACH SIEGEL BUILDING
1 CHASE ROAD
SCARSDALE, NY 10583

COPY MAILED

MAR 12 2007

OFFICE OF PETITIONS

In re Application of	:	
Martin Hoffmann	:	
Application No. 10/414,262	:	ON PETITION
Filed: April 15, 2003	:	
Attorney Docket No. SOLFZ.P4	:	

This is a decision on the petition under 37 CFR 1.137(b), filed July 24, 2006, to revive the above-identified application.

The petition is **GRANTED**.

The application became abandoned for failure to reply in a timely manner to the Notice of Non-Compliant Amendment (37 CFR 1.121), mailed April 19, 2005, which set a shortened statutory period for reply of one (1) month. No extensions of time under the provisions of 37 CFR 1.136(a) were obtained. Accordingly, the application became abandoned on May 20, 2005.

The petition satisfies the requirements of 37 CFR 1.137(b) in that petitioner has supplied (1) a reply, (2) the petition fee of $1,500, and (3) an adequate statement of unintentional delay. Accordingly, the failure to timely reply to the Notice of April 19, 2005 is accepted as being unintentionally delayed.

It is not apparent whether the person signing the statement of unintentional delay was in a position to have firsthand or direct knowledge of the facts and circumstances of the delay at issue. Nevertheless, such statement is being treated as having been made as the result of a reasonable inquiry into the facts and circumstances of such delay. See 37 CFR 10.18(b) and Changes to Patent Practice and Procedure; Final Rule Notice, 62 Fed. Reg. 53131, 53178 (October 10, 1997), 1203 Off. Gaz. Pat. Office 63, 103 (October 21, 1997). In the event that such an inquiry has not been made, petitioner must make such an inquiry. If such inquiry results in the discovery that it is not correct that the entire delay in filing the required reply from the due date for the reply until the filing of a grantable petition pursuant to 37

CFR 1.137(b) was unintentional, petitioner must notify the Office.

This application is being referred to Technology Center AU 3679 for appropriate action in the normal course of business on the reply received July 24, 2006.

Telephone inquiries concerning this decision should be directed to the undersigned at (571) 272-3218.

Frances Hicks

Frances Hicks
Petitions Examiner
Office of Petitions

UNITED STATES PATENT AND TRADEMARK OFFICE

COMMISSIONER FOR PATENTS
UNITED STATES PATENT AND TRADEMARK OFFICE
P.O. BOX 1450
ALEXANDRIA, VA 22313-1450
WWW.USPTO.GOV

PAPER NO. 4

KLAUBER & JACKSON
411 HACKENSACK AVENUE
HACKENSACK, NJ 07601

COPY MAILED

JUL 3 1 2003

OFFICE OF PETITIONS

In re Application of
Ariel Ruiz I Altaba, et al.
Application No. 10/414,267
Filed: April 15, 2003
Attorney Docket No. 1395-1-003N

DECISION GRANTING PETITION

This is a decision on the petition filed by facsimile transmission on June 20, 2003, requesting that the above-identified application be accorded a filing date of April 15, 2003, instead of the presently accorded date of April 16, 2003. The petition is properly be treated under 37 CFR 1.10(d).

Petitioners request the earlier filing date on the basis that the application was purportedly deposited in Express Mail service with the U. S. Postal Service, on April 15, 2003. In support, petitioners provided, inter alia, a copy the US Postal Service (USPS) Track & Confirm record showing that a package bearing Express Mail label No. EV344831328US was accepted "April 15, 2003, 4:389pm, River Edge, NJ 07661" and "delivered at 10:59am on April 16, 2003 in Washington DC to Patents 20231." The same Express Mail number appears on the original transmittal letter found in the file.

The Office considers the date the paper or fee is shown to have been deposited as "Express Mail" to be the "Date In" on the Express Mail label, MPEP 513. That is the date that verifies that the package was actually mailed. As the Track/Confirm record corroborates a "date-in" of April 15, 2003, the petition is granted.

The application is being returned to Initial Patent Examination Division (OIPE) for correction of the filing date to **April 15, 2003** and issuance of a corrected filing receipt.

Applicant is reminded that the time period set in the Notice to File Missing Parts of Nonprovisional Application mailed June 9, 2003 continues to run.

Telephone inquires related to this decision should be directed to the undersigned at (703) 305-9220. Telephone inquiries related to OIPE processing should be directed to their hotline at (703) 308-1202.

Sherry D. Brinkley
Petitions Examiner
Office of Petitions
Office of the Deputy Commissioner
for Patent Examination Policy

UNITED STATES PATENT AND TRADEMARK OFFICE

H·A

UNITED STATES DEPARTMENT OF COMMERCE
United States Patent and Trademark Office
Address: COMMISSIONER FOR PATENTS
P.O. Box 1450
Alexandria, Virginia 22313-1450
www.uspto.gov

APPLICATION NO.	FILING DATE	FIRST NAMED INVENTOR	ATTORNEY DOCKET NO.	CONFIRMATION NO.
10/414,298	04/16/2003	George V. Tarnovsky	TARN.0001	5967

38327 7590 08/16/2006

REED SMITH LLP
3110 FAIRVIEW PARK DRIVE, SUITE 1400
FALLS CHURCH, VA 22042

EXAMINER
KIM, AHSHIK

ART UNIT	PAPER NUMBER
2876	

DATE MAILED: 08/16/2006

Please find below and/or attached an Office communication concerning this application or proceeding.

UNITED STATES PATENT AND TRADEMARK OFFICE

COMMISSIONER FOR PATENTS
UNITED STATES PATENT AND TRADEMARK OFFICE
P.O. BOX 1450
ALEXANDRIA, VA 22313-1450
www.uspto.gov

In re Patent No. TARNOVSKY ET AL.	:	
Issue Date: 19 April 2005	:	**DECISION GRANTING**
Appl No.: 10/414,298	:	**PETITION**
Filed: April 16, 2003	:	*37 CFR 1.324*
For: SYSTEM FOR TESTING, VERIFYING	:	
LEGITIMACY OF SMART CARD IN-SITU AND	:	
FOR STORING DATA THEREIN	:	
	:	

This is a decision on the petition filed 3/13/2006 to correct inventorship under 37 CFR 1.324.

The petition is granted.

The patented file is being forwarded to Certificate of Corrections Branch for issuance of a certificate naming only the actual inventor or inventors.

Michael G. Lee
Supervisory Patent Examiner
Art Unit 2876
Technology Center 2800

REED SMITH LLP
3110 FAIRVIEW PARK DRIVE, SUITE 1400
FALLS CHURCH, VA 22042

UNITED STATES PATENT AND TRADEMARK OFFICE

COMMISSIONER FOR PATENTS
UNITED STATES PATENT AND TRADEMARK OFFICE
P.O. BOX 1450
ALEXANDRIA, VA 22313-1450
www.uspto.gov

DATE: August 3, 2006
TO: Certificates of Correction Branch
FROM: Michael G. Lee
SPE, Art Unit 2876
SUBJECT: REQUEST FOR CERTIFICATE OF CORRECTION

Please issue a Certificate of Correction in U. S. Letters Patent No. 6,880,752 as specified on the attached Certificate.

Michael G. Lee, SPE
Art Unit 2876

UNITED STATES PATENT AND TRADEMARK OFFICE

CERTIFICATE

Patent No. 6,880,752
Patented: 19 April 2005

On petition requesting issuance of a certificate for correction of inventorship pursuant to 35 U.S.C. 256, it has been found that the above identified patent, through error and without deceptive intent, improperly sets forth the inventorship. Accordingly, it is hereby certified that the correct inventorship of this patent is:

George V. Tarnovsky
Christopher G. Tarnovsky
John C. Norris

Michael G. Lee
Supervisory Patent Examiner
Art Unit 2876

UNITED STATES PATENT AND TRADEMARK OFFICE

Commissioner for Patents
United States Patent and Trademark Office
P.O. Box 1450
Alexandria, VA 22313-1450
www.uspto.gov

BIRCH STEWART KOLASCH & BIRCH
PO BOX 747
FALLS CHURCH VA 22040-0747

MAILED

MAR 10 2010

OFFICE OF PETITIONS

In re Application of	:	
Ick Hwan Kim	:	
Application No. 10/414,300	:	DECISION ON PETITION
Filed: April 16, 2003	:	
Attorney Docket No: 0465-0992P	:	

This is a decision on the petition under the unintentional provisions of 37 CFR 1.137(b), filed December 31, 2009, to revive the above-identified application.

The petition is **GRANTED**.

This application became abandoned for failure to reply in a proper and timely manner to the final Office action mailed June 8, 2009. No extensions of time under the provisions of 37 CFR 1.136(a) were timely obtained. Accordingly, this application became abandoned on September 9, 2009.

The petition satisfies the requirements of 37 CFR 1.137(b) in that petitioner has supplied (1) the reply in the form of a Request for Continued Examination (RCE) and fee of $810.00 and the submission required by 37 CFR 1.114; (2) the petition fee of $1,620.00; and (3) a proper statement of unintentional delay.

Additionally, an extension of time under 37 CFR 1.136 must be filed prior to the expiration of the maximum extendable period for reply. *See* In re Application of S., 8 USPQ2d 1630, 1631 (Comm'r Pats. 1988). Since the $1,110.00, three- month extension of time fee submitted with the petition on December 31, 2009 was subsequent to the maximum extendable period for reply, this fee is unnecessary and will be refunded to petitioner's deposit account in due course.

Telephone inquiries concerning this decision should be directed to the undersigned at (571) 272-7751.

This matter is being referred to Technology Center 2423 for processing of the Request for Continued Examination under 37 CFR 1.114 filed with the instant petition.

Joan Olszewski

Joan Olszewski
Petitions Examiner
Office of Petitions

SPE RESPONSE FOR CERTIFICATE OF CORRECTION

Paper No.: _____

DATE : June 8, 2007

TO SPE OF : ART UNIT ~~2818~~ 2827

SUBJECT : Request for Certificate of Correction for Appl. No. 10/414318 patent no6816408

Please respond to this request for a certificate of correction within 7 days.

Please review the requested changes/corrections as shown in the **COCIN** document(s) in the IFW application image. No new matter should be introduced, nor should the scope or meaning of the claims be changed.

Please complete the response (see below) and forward the completed response to scanning using document code **COCX**.

Magdalene Talley

Certificates of Correction Branch

703-308-9390 ext. 116

Thank You For Your Assistance

The request for issuing the above-identified correction(s) is hereby:

Note your decision on the appropriate box.

- ☒ **Approved** TP — **All** changes apply.
- ☐ **Approved in Part** — Specify below which changes **do not** apply.
- ☐ **Denied** — State the reasons for denial below.

Comments: _____

SPE

2827
Art Unit

PTO/SB/44 (04-04)
Approved for use through 04/30/2007. OMB 0651-0033
U.S. Patent and Trademark Office; U.S. DEPARTMENT OF COMMERCE
Under the Paperwork Reduction Act of 1995, no persons are required to respond to a collection of information unless it displays a valid OMB control number.
(Also Form PTO-1050)

UNITED STATES PATENT AND TRADEMARK OFFICE
CERTIFICATE OF CORRECTION

PATENT NO : 6,816,408 B2

DATED : November 9, 2004

INVENTOR(S) : Greg A. Blodgett

It is certified that errors appear in the above-identified patent and that said Letters Patent is hereby corrected as shown below:

In the drawings:

In FIG. 5, insert reference numeral --200-- and its associated lead line

In the specification:

COLUMN 4, LINE 13, change "CELLO-5," to --CELL0-5,--

MAILING ADDRESS OF SENDER:

PATENT NO. 6,816,408 B2

Kevin K. Johanson
230 South 500 East, Suite 300
Salt Lake City, Utah 84102 USA

MAY - 8 2007

No. of additional copies

This collection of information is required by 37 CFR 1.322, 1.323, and 1.324. The information is required to obtain or retain a benefit by the public which is to file (and by the USPTO to process) an application. Confidentiality is governed by 35 U.S.C. 122 and 37 CFR 1.14. This collection is estimated to take 1.0 hour to complete, including gathering, preparing, and submitting the completed application form to the USPTO. Time will vary depending upon the individual case. Any comments on the amount of time you require to complete this form and/or suggestions for reducing this burden, should be sent to the Chief Information Officer, U.S. Patent and Trademark Office, U.S. Department of Commerce, P.O. Box 1450, Alexandria, VA 22313-1450. DO NOT SEND FEES OR COMPLETED FORMS TO THIS ADDRESS.
SEND TO: Attention Certificate of Corrections Branch, Commissioner for Patents, P.O. Box 1450, Alexandria, VA 22313-1450.

If you need assistance in completing the form, call 1-800-PTO-9199 and select option 2.

PTO/SB/44 (04-04)
Approved for use through 04/30/2007. OMB 0651-0033
U.S. Patent and Trademark Office; U.S. DEPARTMENT OF COMMERCE
Under the Paperwork Reduction Act of 1995, no persons are required to respond to a collection of information unless it displays a valid OMB control number.
(Also Form PTO-1050)

UNITED STATES PATENT AND TRADEMARK OFFICE
CERTIFICATE OF CORRECTION

PATENT NO : 6,816,408 B2

DATED : November 9, 2004

INVENTOR(S) : Greg A. Blodgett

It is certified that errors appear in the above-identified patent and that said Letters Patent is hereby corrected as shown below:

Please replace FIG. 5 with the following replacement figure:

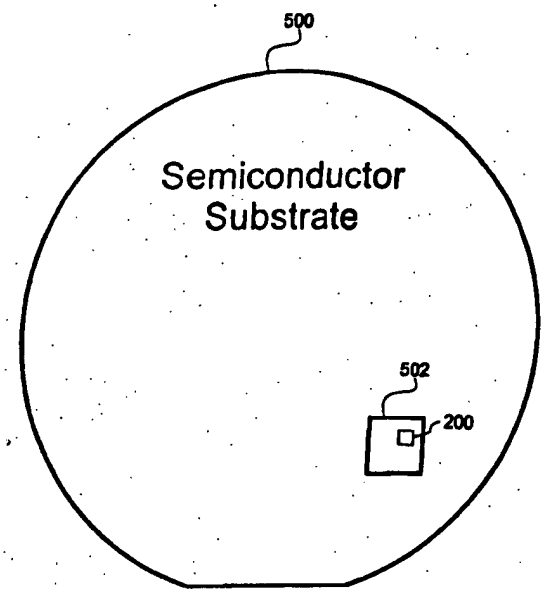

FIG. 5

MAILING ADDRESS OF SENDER:

PATENT NO. 6,816,408 B2

Kevin K. Johanson
230 South 500 East, Suite 300
Salt Lake City, Utah 84102 USA

No. of additional copies

This collection of information is required by 37 CFR 1.322, 1.323, and 1.324. The information is required to obtain or retain a benefit by the public which is to file (and by the USPTO to process) an application. Confidentiality is governed by 35 U.S.C. 122 and 37 CFR 1.14. This collection is estimated to take 1.0 hour to complete, including gathering, preparing, and submitting the completed application form to the USPTO. Time will vary depending upon the individual case. Any comments on the amount of time you require to complete this form and/or suggestions for reducing this burden, should be sent to the Chief Information Officer, U.S. Patent and Trademark Office, U.S. Department of Commerce, P.O. Box 1450, Alexandria, VA 22313-1450. DO NOT SEND FEES OR COMPLETED FORMS TO THIS ADDRESS.
SEND TO: Attention Certificate of Corrections Branch, Commissioner for Patents, P.O. Box 1450, Alexandria, VA 22313-1450.

If you need assistance in completing the form, call 1-800-PTO-9199 and select option 2.

10/414318

C7C

PATENT

OIPE IAP51 MAY 04 2007 PATENT & TRADEMARK OFFICE

IN THE UNITED STATES PATENT AND TRADEMARK OFFICE

Inventor(s): Greg A. Blodgett

Patent No.: 6,816,408 B2

Issued: November 9, 2004

For: MEMORY DEVICE WITH MULTI-LEVEL STORAGE CELLS

Attorney Docket No.: 2269-3245.2US (97-0162.03/US)

CERTIFICATE OF MAILING

I hereby certify that this correspondence along with any attachments referred to or identified as being attached or enclosed is being deposited with the United States Postal Service as First Class Mail on the date of deposit shown below with sufficient postage and in an envelope addressed to the Commissioner for Patents, P.O. Box 1450, Alexandria, VA 22313-1450.

May 1, 2007 — Date

Signature

Leta M. Howard — Name (Type/Print)

REQUEST FOR CERTIFICATE OF CORRECTION OF PATENT FOR APPLICANT'S MISTAKES (37 C.F.R. § 1.323) AND PATENT OFFICE MISTAKES (37 C.F.R. § 1.322)

ENTER TP 9/24/07

Certificate MAY 08 2007 of Correction

Attn.: Certificate of Corrections Branch
Commissioner for Patents
P.O. Box 1450
Alexandria, VA 22313-1450

Sir:

It is noted that a combination of Applicant and Patent Office errors appear in this patent of a typographical nature or character and correction thereof does not involve such changes in the patent as would constitute new matter or would require reexamination. A certificate of correction in the form attached hereto is requested.

05/04/2007 AWONDAF1 00000042 6816408
01 FC:1811 100.00 OP

Please send the Certificate to:

Name: Kevin K. Johanson
Address: TraskBritt
P.O. Box 2550
Salt Lake City, Utah 84110

MAY - 8 2007

The fee of $100.00 as required by 37 C.F.R. § 1.20(a) is enclosed.

Attached hereto in duplicate is Form PTO/SB/44 with at least one copy being suitable for printing.

Respectfully submitted,

Kevin K. Johanson
Registration No. 38,506
Attorney for Applicant(s)
TRASKBRITT
P.O. Box 2550
Salt Lake City, Utah 84110-2550
Telephone: 801-532-1922

Date: May 1, 2007
KKJ/csw

Enclosures: PTO/SB/44 in duplicate
Check No. 23687 in the amount of $100.00

Document in ProLaw

MAY - 8 2007

PTO/SB/44 (04-04)
Approved for use through 04/30/2007. OMB 0651-0033
U.S. Patent and Trademark Office; U.S. DEPARTMENT OF COMMERCE
Under the Paperwork Reduction Act of 1995, no persons are required to respond to a collection of information unless it displays a valid OMB control number.
(Also Form PTO-1050)

UNITED STATES PATENT AND TRADEMARK OFFICE
CERTIFICATE OF CORRECTION

PATENT NO : 6,816,408 B2

DATED : November 9, 2004

INVENTOR(S) : Greg A. Blodgett

It is certified that errors appear in the above-identified patent and that said Letters Patent is hereby corrected as shown below:

In the drawings:

In FIG. 5, insert reference numeral --200-- and its associated lead line

In the specification:

COLUMN 4, LINE 13, change "CELLO-5," to --CELL0-5,--

MAILING ADDRESS OF SENDER:

PATENT NO. 6,816,408 B2

Kevin K. Johanson
230 South 500 East, Suite 300
Salt Lake City, Utah 84102 USA

MAY - 8 2007

No. of additional copies

This collection of information is required by 37 CFR 1.322, 1.323, and 1.324. The information is required to obtain or retain a benefit by the public which is to file (and by the USPTO to process) an application. Confidentiality is governed by 35 U.S.C. 122 and 37 CFR 1.14. This collection is estimated to take 1.0 hour to complete, including gathering, preparing, and submitting the completed application form to the USPTO. Time will vary depending upon the individual case. Any comments on the amount of time you require to complete this form and/or suggestions for reducing this burden, should be sent to the Chief Information Officer, U.S. Patent and Trademark Office, U.S. Department of Commerce, P.O. Box 1450, Alexandria, VA 22313-1450. DO NOT SEND FEES OR COMPLETED FORMS TO THIS ADDRESS.
SEND TO: Attention Certificate of Corrections Branch, Commissioner for Patents, P.O. Box 1450, Alexandria, VA 22313-1450.

If you need assistance in completing the form, call 1-800-PTO-9199 and select option 2.

PTO/SB/44 (04-04)
Approved for use through 04/30/2007. OMB 0651-0033
U.S. Patent and Trademark Office; U.S. DEPARTMENT OF COMMERCE
Under the Paperwork Reduction Act of 1995, no persons are required to respond to a collection of information unless it displays a valid OMB control number.
(Also Form PTO-1050)

UNITED STATES PATENT AND TRADEMARK OFFICE
CERTIFICATE OF CORRECTION

PATENT NO : 6,816,408 B2
DATED : November 9, 2004
INVENTOR(S) : Greg A. Blodgett

It is certified that errors appear in the above-identified patent and that said Letters Patent is hereby corrected as shown below:

Please replace FIG. 5 with the following replacement figure:

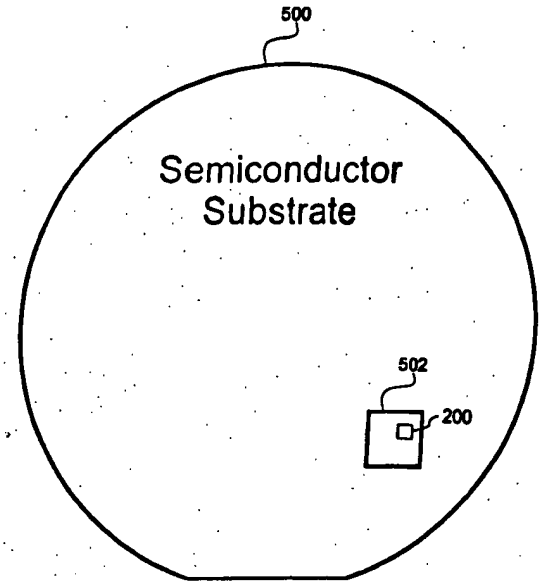

FIG. 5

MAILING ADDRESS OF SENDER:

PATENT NO. 6,816,408 B2

Kevin K. Johanson
230 South 500 East, Suite 300
Salt Lake City, Utah 84102 USA

No. of additional copies

This collection of information is required by 37 CFR 1.322, 1.323, and 1.324. The information is required to obtain or retain a benefit by the public which is to file (and by the USPTO to process) an application. Confidentiality is governed by 35 U.S.C. 122 and 37 CFR 1.14. This collection is estimated to take 1.0 hour to complete, including gathering, preparing, and submitting the completed application form to the USPTO. Time will vary depending upon the individual case. Any comments on the amount of time you require to complete this form and/or suggestions for reducing this burden, should be sent to the Chief Information Officer, U.S. Patent and Trademark Office, U.S. Department of Commerce, P.O. Box 1450, Alexandria, VA 22313-1450. DO NOT SEND FEES OR COMPLETED FORMS TO THIS ADDRESS.
SEND TO: Attention Certificate of Corrections Branch, Commissioner for Patents, P.O. Box 1450, Alexandria, VA 22313-1450.

If you need assistance in completing the form, call 1-800-PTO-9199 and select option 2.

SPE RESPONSE FOR CERTIFICATE OF CORRECTION

Paper No.: _____

DATE : June 8, 2007

TO SPE OF : ART UNIT ~~2818~~ 2827

SUBJECT : Request for Certificate of Correction for Appl. No. 10/414318 patent no6816408

Please respond to this request for a certificate of correction within 7 days.

Please review the requested changes/corrections as shown in the **COCIN** document(s) in the IFW application image. No new matter should be introduced, nor should the scope or meaning of the claims be changed.

Please complete the response (see below) and forward the completed response to scanning using document code **COCX**.

Magdalene Talley

Certificates of Correction Branch

703-308-9390 ext. 116

Thank You For Your Assistance

The request for issuing the above-identified correction(s) is hereby:

Note your decision on the appropriate box.

- ☒ **Approved** TP — **All** changes apply.
- ☐ **Approved in Part** — Specify below which changes **do not** apply.
- ☐ **Denied** — State the reasons for denial below.

Comments: _____

SPE

2827

Art Unit

10/414318

C7C

OIPE IAP51 MAY 04 2007 PATENT & TRADEMARK OFFICE

PATENT

IN THE UNITED STATES PATENT AND TRADEMARK OFFICE

Inventor(s): Greg A. Blodgett

Patent No.: 6,816,408 B2

Issued: November 9, 2004

For: MEMORY DEVICE WITH MULTI-LEVEL STORAGE CELLS

Attorney Docket No.: 2269-3245.2US (97-0162.03/US)

CERTIFICATE OF MAILING

I hereby certify that this correspondence along with any attachments referred to or identified as being attached or enclosed is being deposited with the United States Postal Service as First Class Mail on the date of deposit shown below with sufficient postage and in an envelope addressed to the Commissioner for Patents, P.O. Box 1450, Alexandria, VA 22313-1450.

May 1, 2007 — Date

Signature

Leta M. Howard — Name (Type/Print)

REQUEST FOR CERTIFICATE OF CORRECTION OF PATENT FOR APPLICANT'S MISTAKES (37 C.F.R. § 1.323) AND PATENT OFFICE MISTAKES (37 C.F.R. § 1.322)

ENTER TP 9/24/07

Certificate MAY 08 2007 of Correction

Attn.: Certificate of Corrections Branch
Commissioner for Patents
P.O. Box 1450
Alexandria, VA 22313-1450

Sir:

It is noted that a combination of Applicant and Patent Office errors appear in this patent of a typographical nature or character and correction thereof does not involve such changes in the patent as would constitute new matter or would require reexamination. A certificate of correction in the form attached hereto is requested.

05/04/2007 AWONDAF1 00000042 6816408
01 FC:1811 100.00 OP

Please send the Certificate to:

Name: Kevin K. Johanson
Address: TraskBritt
P.O. Box 2550
Salt Lake City, Utah 84110

MAY - 8 2007

The fee of $100.00 as required by 37 C.F.R. § 1.20(a) is enclosed.

Attached hereto in duplicate is Form PTO/SB/44 with at least one copy being suitable for printing.

Respectfully submitted,

Kevin K. Johanson
Registration No. 38,506
Attorney for Applicant(s)
TRASKBRITT
P.O. Box 2550
Salt Lake City, Utah 84110-2550
Telephone: 801-532-1922

Date: May 1, 2007
KKJ/csw

Enclosures: PTO/SB/44 in duplicate
Check No. 23687 in the amount of $100.00

Document in ProLaw

MAY - 8 2007

UNITED STATES PATENT AND TRADEMARK OFFICE

Commissioner for Patents
United States Patent and Trademark Office
P.O. Box 1450
Alexandria, VA 22313-1450
www.uspto.gov

Paper No. 6

STEVEN HEIDECKE
1550 SPRING RD
SUITE 120
OAK BROOK IL 60523

COPY MAILED

NOV 0 8 2004

OFFICE OF PETITIONS

In re Application of	:	
Steven Heidecke	:	
Application No. 10/414,328	:	ON PETITION
Filed: April 14, 2003	:	
Title: Exercise Device	:	

This is a decision on the petition to revive under 37 CFR 1.137(a), filed September 24, 2004.

The petition under 37 CFR 1.137(a) is **DISMISSED**.

Any request for reconsideration of this decision must be submitted within **TWO (2) MONTHS** from the mail date of this decision. The reconsideration request should include a cover letter entitled "Renewed Petition under 37 CFR 1.137(a)". Extensions of time under 37 CFR 1.136(a) are permitted. No fee is required for a renewed petition.

The above-identified application became abandoned for failure to timely file a reply in response to the Notice to File Corrected Application Papers mailed July 8, 2003. This Notice set a shortened statutory period for reply of two months. No extensions of time under 37 CFR 1.136(a) were obtained. No reply having been received, the above identified application became abandoned on September 9, 2003. A Notice of Abandonment was mailed on August 27, 2004.

A grantable petition under 37 CFR 1.137(a) must be accompanied by: (1) the reply required to the outstanding Office action or notice, unless previously filed; (2) the petition fee set forth in 37 CFR 1.17(l); and (3) a showing to the satisfaction of the Commissioner that the entire delay in filing the required reply from the due date for the reply until the filing of a grantable petition pursuant to this paragraph was unavoidable. The instant petition lacks item (3).

Decisions on reviving abandoned applications on the basis of "unavoidable" delay have adopted the reasonably prudent person standard in determining if the delay was unavoidable: "The word 'unavoidable' ... is applicable to ordinary human affairs, and requires no more or greater care or diligence than is generally used and observed by prudent and careful men in relation to their most important business."[1]

Moreover, delay resulting from the lack of knowledge or improper application of the patent statutes, rules of practice or the Manual of Patent Examining Procedure, however, does not constitute "unavoidable" delay.[2]

With regards to item (3), petitioner states that he did not receive the July 8, 2003 Notice to File Corrected Application Papers. To establish nonreceipt of an Office action, a petitioner must: 1) include a statement that the Office action was not received; 2) attest to the fact that a search of the file jacket and docket records indicates that the Office action was not received; and 3) include a copy of the **docket record** where the nonreceived Office action would have been entered had it been received and docketed.[3] A proper docket report consists of a "docket record where the nonreceived Office action would have been entered had it been received and docketed."[4] "For example, if a three month period for reply was set in the nonreceived Office action, a copy of the docket record showing all replies docketed for a date three months from the mail date of the nonreceived Office action must be submitted..."[5]

However, as petitioner is a pro-se applicant, the Office understands that petitioner may not keep a formal docket record system for his correspondence. In that case, if petitioner seeks to establish that he did not receive the Notice to File Corrected Application Papers, petitioner must explain his system for keeping track of patent matters; where he keeps the correspondence; where he writes down due dates; how he knows replies are due, etc. In essence, petitioner must explain how he reminds himself of response due dates and show that the due date for the July 8, 2003 Notice to File Corrected Application Papers was not entered into that system. The Office would like to see documentary evidence and records as may exist which would substantiate that petitioner exercised due diligence with respect to his most important business.

---

[1] In re Mattulath, 38 App. D.C. 497, 514-15 (1912)(*quoting* Ex parte Pratt, 1887 Dec. Comm'r Pat. 31, 32-33 (1887)); see also Winkler v. Ladd, 221 F. Supp. 550, 552, 138 U.S.P.Q. 666, 167-68 (D.D.C. 1963), aff'd, 143 U.S.P.Q. 172 (D.C. Cir. 1963); Ex parte Henrich, 1913 Dec. Comm'r Pat. 139, 141 (1913).

[2] See Haines, 673 F. Supp. at 317, 5 U.S.P.Q. 2d at 1132; Vincent v. Mossinghoff, 230 U.S.P.Q. 621, 624 (D.D.C. 1985); Smith v. Diamond, 209 U.S.P.Q. 1091 (D.D.C. 1981); Potter v. Dann, 201 U.S.P.Q. 574 (D.D.C. 1978); Ex parte Murray, 1891 Dec. Comm'r Pat. 130, 131 (1891).

[3] See MPEP 711.03(c)(II).

[4] MPEP 711.03(c)(II) (emphasis added).

[5] Id.

Alternative Venue and Other Matters:

While the showing of record is not sufficient to establish to the satisfaction of the Commissioner that the delay was unavoidable, petitioner is not precluded from obtaining relief by filing a petition pursuant to **37 CFR 1.137(b)** on the basis of **unintentional** delay. A grantable petition pursuant to 37 CFR 1.137(b) must be accompanied by (1) The reply required to the outstanding Office action or notice, unless previously filed; (2) The petition fee as set forth in 37 CFR 1.17(m), currently $685 for a small entity; and (3) A statement that the entire delay in filing the required reply from the due date for the reply until the filing of a grantable petition pursuant to this paragraph was unintentional. A blank copy of the form for a petition under 37 CFR 1.137(b) is enclosed for petitioner's convenience.

Further correspondence with respect to this matter should be addressed as follows:

By mail: Mail Stop Petitions
Commissioner for Patents
P.O. Box 1450
Alexandria VA 22313-1450

By FAX: (703) 872-9306
Attn: Office of Petitions

Telephone inquiries related to this decision should be directed to the undersigned at (571)272-3207.

Cliff Congo
Petitions Attorney
Office of Petitions

Enc: PTO/SB/64 (2 pages)

UNITED STATES PATENT AND TRADEMARK OFFICE

Commissioner for Patents
United States Patent and Trademark Office
P.O. Box 1450
Alexandria, VA 22313-1450
www.uspto.gov

STEVEN HEIDECKE
1550 SPRING RD
SUITE 120
OAK BROOK IL 60523

COPY MAILED

JAN 19 2005

OFFICE OF PETITIONS

In re Application of	:	
Steven Heidecke	:	
Application No. 10/414,328	:	ON PETITION
Filed: April 14, 2003	:	
Title: Exercise Device	:	

This is a decision on the petition to revive under 37 CFR 1.137(b), filed December 30, 2004.

The petition under 37 CFR 1.137(b) is **DISMISSED**.

Any request for reconsideration of this decision must be submitted within **TWO (2) MONTHS** from the mail date of this decision. The reconsideration request should include a cover letter entitled "Renewed Petition under 37 CFR 1.137(b)". Extensions of time under 37 CFR 1.136(a) are permitted. No fee is required for a renewed petition.

The above-identified application became abandoned for failure to timely file a reply in response to the Notice to File Corrected Application Papers mailed July 8, 2003. This Notice set a shortened statutory period for reply of two months. No extensions of time under 37 CFR 1.136(a) were obtained. No reply having been received, the above identified application became abandoned on September 9, 2003. A Notice of Abandonment was mailed on August 27, 2004. Applicant filed a petition to revive under 37 CFR 1.137(a) on September 24, 2004. However, this petition was dismissed in a decision mailed on November 8, 2004.

A grantable petition under 37 CFR 1.137(b) must be accompanied by: (1) the required reply, unless previously filed; (2) the petition fee as set forth in 37 CFR 1.17(m); (3) a statement that the entire delay in filing the required reply from the due date for the reply until the filing of a grantable petition pursuant to 37 CFR 1.137(b) was unintentional; and (4) any terminal disclaimer (and fee as set forth in 37 CFR 1.20(d)) required by 37 CFR 1.137(d).

The instant petition lacks requirement (2), the petition fee. Effective December 8, 2004, the fee for a petition under 37 CFR 1.137(b) was increased to $750 for a small entity. Petitioner has submitted the fee in effect before December 8, 2004, or $685. Accordingly, on renewed petition, petitioner needs to submit the balance of $65.

Further correspondence with respect to this matter should be addressed as follows:

By mail: Mail Stop Petitions
Commissioner for Patents
P.O. Box 1450
Alexandria VA 22313-1450

By FAX: (703) 872-9306
Attn: Office of Petitions

Telephone inquiries related to this decision should be directed to the undersigned at (571)272-3207.

Cliff Congo
Petitions Attorney
Office of Petitions

UNITED STATES PATENT AND TRADEMARK OFFICE

Commissioner for Patents
United States Patent and Trademark Office
P.O. Box 1450
Alexandria, VA 22313-1450
www.uspto.gov

STEVEN HEIDECKE
1550 SPRING RD
SUITE 120
OAK BROOK IL 60523

COPY MAILED

FEB 14 2005

OFFICE OF PETITIONS

In re Application of Stephen Heidecke Application No. 10/414,328 Filed: April 14, 2003 Title: Exercise Device	: : : : :	ON PETITION

This is a decision on the renewed petition under 37 CFR 1.137(b), filed January 31, 2005.

The petition is **GRANTED**.

The above-identified application became abandoned for failure to timely file a reply to the Notice to File Corrected Application Papers, mailed July 8, 2003, which set an extendable period for reply of two months for applicant to file a substitute specification and additional claims fees. No extensions of time under the provisions of 37 CFR 1.136(a) were obtained. Accordingly, no reply to the Notice to File Corrected Application Papers having been received, the above-identified application became abandoned on September 9, 2003. A Notice of Abandonment

was mailed on August 27, 2004. Applicant filed a petition to revive under 37 CFR 1.137(a) on September 24, 2004. However, this petition was dismissed in a decision mailed on November 8, 2004. Applicant then filed a petition to revive under 37 CFR 1.137(b) on December 30, 2004. However, this petition was dismissed in a decision mailed on January 19, 2005, because applicant did not submit the petition fee in full.

With the instant petition, petitioner paid the balance of the petition fee, and made the proper statement of unintentional delay. The required reply in the form of a substitute specification was previously filed on September 24, 2004.

The application file is being forwarded to the Office of Initial Patent Examination for pre-examination processing.

Telephone inquiries regarding this decision should be directed to the undersigned at (571)272-3207.

Cliff Congo
Petitions Attorney
Office of Petitions

UNITED STATES PATENT AND TRADEMARK OFFICE

Commissioner for Patents
United States Patent and Trademark Office
P.O. Box 1450
Alexandria, VA 22313-1450
www.uspto.gov

LADAS & PARRY LLP
224 SOUTH MICHIGAN AVE., SUITE 1600
CHICAGO, IL 60604

COPY MAILED

FEB 07 2008

OFFICE OF PETITIONS

In re Application of :
Hironori Kobayashi et al :
Application No. 10/414,349 : ON PETITION
Filed: April 15, 2003 :
Attorney Docket No. CU-6011 :

This is a decision on the petition filed, October 11, 2007 under 37 CFR 1.137(b), to revive the above-identified application.

The petition is **GRANTED.**

The above-identified application became abandoned for failure to reply within the meaning of 37 CFR 1.113 in a timely manner to the final Office action mailed November 2, 2005, which set a shortened statutory period for reply of three (3) months. No extension of time under the provisions of 37 CFR 1.136(a) were obtained. Accordingly, the above-identified application became abandoned on February 3, 2006.

The above-identified application is being revived solely for purposes of continuity with a Request For Continued Examination (RCE) filed on October 11, 2007.

Telephone inquiries concerning this decision should be directed to Irvin Dingle at (571) 272-3210.

This matters is being referred to Technology Center AU 1756 for further processing.

Irvin Dingle
Petitions Examiner
Office of Petitions

UNITED STATES PATENT AND TRADEMARK OFFICE

Commissioner for Patents
United States Patent and Trademark Office
P.O. Box 1450
Alexandria, VA 22313-1450
www.uspto.gov

PATRICK J. VICCARO
ALLEGHENY TECHNOLOGIES INCORPORATED
1000 SIX PPG PLACE
PITTSBURGH, PA 15222

COPY MAILED

JUN 0 9 2005

OFFICE OF PETITIONS

In re Application of
Jean-Luc Dufour et al
Application No. 10/414,358
Filed: April 15, 2003
Attorney Docket No. TMP-2034

ON PETITION

This is a decision on the petition under 37 CFR 1.173(b), filed September 10, 2004, to revive the above-identified application.

The petition is **GRANTED.**

The above-identified application became abandoned for failure to reply in a timely manner to the Notice to File Corrected Application Papers (Notice) mailed June 16, 2003. The Notice set a period for reply of two (2) months from the mail date of the Notice. No extensions of time under the provisions of 37 CFR 1.136(a) were obtained. Accordingly, the above-identified application became abandoned on August 17, 2003.

It is not apparent whether the person signing the statement of unintentional delay was in a position to have firsthand or direct knowledge of the facts and circumstances of the delay at issue. Nevertheless, such statement is being treated as having been made as the result of a reasonable inquiry into the facts and circumstances of such delay. See 37 CFR 10.18(b) and Changes to Patent Practice and Procedure; Final Rule Notice, 62 Fed. Reg. 53131, 53178 (October 10, 1997), 1203 Off. Gaz. Pat. Office 63, 103 (October 21, 1997). In the event that such an inquiry has not been made, petitioner must make such an inquiry. If such inquiry results in the discovery that it is not correct that the entire delay in filing the required reply from the due date for the reply until the filing of a grantable petition pursuant to 37 CFR 1.137(b) was unintentional, petitioner must notify the Office.

There is no indication that the person signing the instant petition was ever given a power of attorney or authorization of agent to prosecute the above-identified application. If the person signing the instant petition desires to receive future correspondence regarding this application, the appropriate power of attorney or authorization of agent must be submitted. While a courtesy copy of this decision is being mailed to the person signing the instant petition, all future correspondence will be directed to the address of currently of record until such time as appropriate instructions are received to the contrary.

Telephone inquiries concerning this decision should be directed to Wan Laymon at (571) 272-3220.

Copied from 10414356 on 06/27/2005

This matter is being referred to the Office of Initial Patent Examination for preexamination processing.

Wan Laymon
Petitions Examiner
Office of Petitions
Office of the Deputy Commissioner
for Patent Examination Policy

cc: KIRKPATRICK & LOCKHART
HENRY W. OLIVER BUILDING
535 SMITHFIELD STREET
PITTSBURGH, PA 15222

Copied from 10414356 on 06/27/2005

UNITED STATES PATENT AND TRADEMARK OFFICE

COMMISSIONER FOR PATENTS
UNITED STATES PATENT AND TRADEMARK OFFICE
P.O. BOX 1450
ALEXANDRIA, VA 22313-1450
www.uspto.gov

GEORGE D. DICKOS
KIRKPATRICK & LOCKHART LLP
HENRY W. OLIVER BUILDING
535 SMITHFIELD STREET
PITTSBURGH, PA 15222-2312

COPY MAILED

JAN 1 2 2004

OFFICE OF PETITIONS

In re Application of
John Apostolides
Application No. 10/414,360
Filed: April 15, 2003
Attorney Docket No. 00478CIPCIPCON

NOTICE

This is a notice regarding your request for acceptance of a fee deficiency submission under 37 CFR 1.28. On September 1, 1998, the Court of Appeals for the Federal Circuit held that 37 CFR 1.28(c) is the sole provision governing the time for correction of the erroneous payment of the issue fee as a small entity. **See DH Technology v. Synergystex International, Inc. 154 F.3d 1333, 47 USPQ2d 1865 (Fed. Cir. Sept. 1, 1998).**

The Office no longer investigates or rejects original or reissue applications under 37 CFR 1.56. **1098 Off. Gaz. Pat. Office 502 (January 3, 1989)**. Therefore, nothing in this Notice is intended to imply that an investigation was done.

Your fee deficiency submission under 37 CFR 1.28 is hereby **ACCEPTED**.

Inquiries related to this communication should be directed to the Office of Petitions Staff at (703) 305-9285.

Further correspondence with respect to this matter should be addressed as follows:

By mail: Mail Stop PETITION
Commissioner for Patents
Post Office Box 1450
Alexandria, VA 22313-1450

Effective December 1, 2003, the Office of Petitions can no longer receive hand-carried correspondence, or facsimile transmissions of correspondence. The centralized location for hand-carried correspondence is the Customer Window located at:

2011 South Clark Place
Crystal Plaza Two, Lobby
Arlington, VA 22202

The centralized facsimile number is **(703) 872-9306.**

This file is being forwarded to Technology Center AU 3753.

Irvin Dingle
Petitions Examiner
Office of Petitions
Office of the Deputy Commissioner
for Patent Examination Policy

UNITED STATES PATENT AND TRADEMARK OFFICE

Commissioner for Patents
United States Patent and Trademark Office
P.O. Box 1450
Alexandria, VA 22313-1450
www.uspto.gov

Grossman, Tucker, Perreault & Pfleger, PLLC
55 South Commercial Street
Manchester, NH 03101

COPY MAILED

OCT 2 1 2003

OFFICE OF PETITIONS

In re Application of :
Lin, et al. :
Application No. 10/414,374 :
Filed: April 15, 2003 :
Attorney Docket No. 02MICRO 03.11 :

DECISION ON PETITION

This is a decision on the petition under 37 CFR 1.10, filed September 8, 2003, requesting that the above-identified application be accorded a filing date of April 15, 2003, rather than the presently accorded filing date of April 16, 2003.

Petitioner alleges that the application was deposited in Express Mail service on April 15, 2003. The petition is accompanied by a copy of Express Mail label No. EV201004273US. The same Express Mail label number was placed on the original application papers located in the official file. The Express Mail label contains a United States Postal Service (USPS) stamp of April 16, 2003. However, in support of petitioner's allegation, petitioner submitted a copy of a computer printout from the United States Postal Service Track and Confirm Database. The printout indicated that the USPS accepted a package bearing Express Mail label No. EV201004273US on April 15, 2003, at 4:46 pm in Manchester, NH 03101.

In view of the above, the petition is **granted**. No petition fee is necessary.

This application will be accorded a filing date of April 15, 2003.

Telephone inquiries should be directed to the undersigned at (703) 306-5589.

Christina Tartera Donnell

Christina Tartera Donnell
Senior Petitions Attorney
Office of Petitions

UNITED STATES PATENT AND TRADEMARK OFFICE

Commissioner for Patents
United States Patent and Trademark Office
P.O. Box 1450
Alexandria, VA 22313-1450
www.uspto.gov

GROSSMAN, TUCKER, PERREAULT & PFLEGER
55 SOUTH COMMERCIAL STREET
MANCHESTER NH 03101

COPY MAILED

JUN 15 2005

OFFICE OF PETITIONS

In re Application of	:	
Yung-Lin Lin et al	:	
Application No. 10/414,374	:	ON PETITION
Filed: April 15, 2003	:	
Attorney Docket No. 02MICRPO 03.11	:	

This is a decision on the petition, filed June 8, 2005, under 37 CFR 1.313(c)(2) to withdraw the above-identified application from issue after payment of the issue fee.

The petition is **GRANTED**.

The above-identified application is withdrawn from issue for consideration of a submission under 37 CFR 1.114 (request for continued examination). See 37 CFR 1.313(c)(2).

Petitioner is advised that the issue fee paid on April 25, 2005 in the above-identified application cannot be refunded. If, however, the above-identified application is again allowed, petitioner may request that it be applied towards the issue fee required by the new Notice of Allowance.[1]

Telephone inquiries should be directed to the undersigned at (571) 272-3208.

The examiner of Technology Center AU 2828 will consider the request for continued examination under 37 CFR 1.114.

Karen Creasy

Karen Creasy
Petitions Examiner
Office of Petitions
Office of the Deputy Commissioner
for Patent Examination Policy

---

[1] The request to apply the issue fee to the new Notice may be satisfied by completing and returning the new Issue Fee Transmittal Form PTOL-85(b), which includes the following language thereon: "Commissioner for Patents is requested to apply the Issue Fee and Publication Fee (if any) or re-apply any previously paid issue fee to the application identified above." Petitioner is advised that, whether a fee is indicated as being due or not, the Issue Fee Transmittal Form **must** be completed and timely submitted to avoid abandonment. Note the language in bold text on the first page of the Notice of Allowance and Fee(s) Due (PTOL-85).

UNITED STATES PATENT AND TRADEMARK OFFICE

Commissioner for Patents
United States Patent and Trademark Office
P.O. Box 1450
Alexandria, VA 22313-1450
www.uspto.gov

COPY MAILED

AUG 2 0 2007

OFFICE OF PETITIONS

Sughrue, Mion, Zinn, MacPeak & Seas PLLC
2100 Pennsylvania Avenue, NW
Washington DC 20037-3213

In re Application of
Fukushima et al.
Application No. 10/414,378
Patent No. 7,189,546
Filed: April 16, 2003
Attorney Docket No. Q75191

: DECISION GRANTING PETITION

This decision is in response to applicants' "APPLICATION FOR PATENT TERM ADJUSTMENT UNDER 37 CFR 1.705" timely[1] filed on May 11, 2007 requesting that the Office adjust the patent term adjustment from a determination of three hundred and twenty-three (323) days to a determination of four hundred and forty-one (441) days.

Applicants PTA application is **GRANTED.** The Office will *sua sponte* issue a certificate of correction reflecting a determination of four hundred and fifty one days. In addition, the Office will adjust the PAIR calculation to reflect this decision.

Applicants argue that the Office's reduction of 118 days for the submission of interview summary after the mailing of the notice of allowance should not be considered a failure to engage in reasonable efforts to conclude prosecution of the application . Accordingly, applicants assert that they are entitled to 441 days of PTA because they did not fail to engage in any reasonable efforts to conclude prosecution of the application by submitting the response to the summary of the interview.

Applicants arguments are deemed persuasive. Specifically, the record reflects that applicants submitted the examiner's interview summary with the notice of allowance. The interview summary expressly stated that "THE FORMAL WRITTEN REPLY TO THE LAST OFFICE ACTION MUST INCLUDE THE SUBSTANCE OF THE INTERVIEW." Accordingly, because the examiner expressly required a substance of the interview and such interview summary could not have been performed prior to the notice of allowance, applicants submission of the substance of the interview after the mailed notice of allowance date is not considered a failure to engage in reasonable efforts to conclude prosecution of the application. The one hundred and eighteen (118) day reduction for the miscellaneous incoming letter (i.e., substance of the interview) will be removed. Accordingly, applicants are entitled to a PTA determination of 441 days.

After the mailing of this decision, the Office will forward this application to the certificate of correction branch for a prompt issuance of a certificate of correction.

---

[1]Patent issued on March 13, 2007.

The Office has assessed the $200.00 fee for the filing of this application for Patent Term Adjustment. No additional fees are required.

Any questions concerning this decision should be directed to Kery A. Fries, Senior Legal Advisor, Office of Patent Legal Administration, Office of Deputy Commissioner for Patent Examination Policy at 571-272-7757.

Kery A. Fries

Kery Fries
Senior Legal Advisor
Office of Deputy Commissioner
for Patent Examination Policy

cc: Adjusted PAIR calculation
Draft Certificate of Correction

UNITED STATES PATENT AND TRADEMARK OFFICE

CERTIFICATE OF CORRECTION

PATENT	:	7,189,546 B2
DATED	:	Mar. 13, 2007
INVENTOR(S)	:	Fukushima et al..

It is certified that error appears in the above-identified patent and that said Letters Patent is hereby corrected as shown below:

On the cover page,

[*] Notice: Subject to any disclaimer, the term of this patent is extended or adjusted under 35 USC 154(b) by (323) days

Delete the phrase "by 323 days" and insert – by 441 days--

Day : Friday
Date: 8/17/2007

PALM INTRANET

Time: 13:38:00

PTA Calculations for Application: 10/414378			
Application Filing Date:	04/16/2003	PTO Delay (PTO):	502
Issue Date of Patent:	03/13/2007	Three Years:	0
Pre-Issue Petitions:	0	Applicant Delay (APPL):	179
Post-Issue Petitions:	0	Total PTA (days):	441
PTO Delay Adjustment:	118		

File Contents History

Number	Date	Contents Description	PTO	APPL	START
63	08/17/2007	ADJUSTMENT OF PTA CALCULATION BY PTO	118		
57.5	02/21/2007	PTA 36 MONTHS			
57	03/13/2007	PATENT ISSUE DATE USED IN PTA CALCULATION			
56	02/12/2007	EXPORT TO FINAL DATA CAPTURE			
55	02/09/2007	DISPATCH TO FDC			
54	02/09/2007	APPLICATION IS CONSIDERED READY FOR ISSUE			
53	02/06/2007	ISSUE FEE PAYMENT VERIFIED			
52	02/06/2007	ISSUE FEE PAYMENT RECEIVED			
51	01/23/2007	FINISHED INITIAL DATA CAPTURE			
50	11/16/2006	MISCELLANEOUS INCOMING LETTER		118	
49	11/07/2006	MAIL CORRECTED NOTICE OF ALLOWANCE			
48	11/07/2006	MAIL EXAMINER'S AMENDMENT			
47	11/02/2006	SEQUENCE FORWARDED TO PUBS ON TAPE			
46	10/23/2006	EXPORT TO INITIAL DATA CAPTURE			
45	10/29/2006	ISSUE REVISION COMPLETED			
44	10/29/2006	CORRECTED NOTICE OF ALLOWANCE			
43	10/23/2006	EXAMINER'S AMENDMENT COMMUNICATION			
42	10/17/2006	MAIL NOTICE OF ALLOWANCE			
41	10/15/2006	ISSUE REVISION COMPLETED			
40	10/15/2006	NOTICE OF ALLOWANCE DATA VERIFICATION COMPLETED			
39	10/15/2006	CASE DOCKETED TO EXAMINER IN GAU			
38	10/06/2006	MAIL EXAMINER INTERVIEW SUMMARY (PTOL - 413)			
37	10/02/2006	EXAMINER INTERVIEW SUMMARY RECORD			

		(PTOL - 413)			
36	10/03/2006	NOTICE OF ALLOWABILITY			
34	03/08/2006	INFORMATION DISCLOSURE STATEMENT CONSIDERED			
33	07/07/2006	AFFIDAVIT(S) (RULE 131 OR 132) OR EXHIBIT(S) RECEIVED			
32	07/17/2006	DATE FORWARDED TO EXAMINER			
31	07/07/2006	RESPONSE AFTER NON-FINAL ACTION		61	28
30	07/07/2006	REQUEST FOR EXTENSION OF TIME - GRANTED			
29	03/08/2006	INFORMATION DISCLOSURE STATEMENT (IDS) FILED			
28	02/07/2006	MAIL NON-FINAL REJECTION			
27	02/04/2006	NON-FINAL REJECTION			
26	01/07/2004	INFORMATION DISCLOSURE STATEMENT CONSIDERED			
25	04/16/2003	INFORMATION DISCLOSURE STATEMENT CONSIDERED			
24	12/15/2005	DATE FORWARDED TO EXAMINER			
23	12/02/2005	RESPONSE TO ELECTION / RESTRICTION FILED			
22	12/02/2005	REQUEST FOR EXTENSION OF TIME - GRANTED			
21	10/31/2005	MAIL RESTRICTION REQUIREMENT	502		-1
20	10/29/2005	REQUIREMENT FOR RESTRICTION / ELECTION			
19	10/18/2005	MISCELLANEOUS INCOMING LETTER			
18	05/31/2005	CASE DOCKETED TO EXAMINER IN GAU			
17	04/16/2003	REFERENCE CAPTURE ON IDS			
16	04/18/2005	MISCELLANEOUS INCOMING LETTER			
15	01/14/2005	CASE DOCKETED TO EXAMINER IN GAU			
14	04/06/2004	CASE DOCKETED TO EXAMINER IN GAU			
13	04/05/2004	CASE DOCKETED TO EXAMINER IN GAU			
12	01/07/2004	INFORMATION DISCLOSURE STATEMENT (IDS) FILED			
11	09/09/2003	IFW TSS PROCESSING BY TECH CENTER COMPLETE			
10	04/16/2003	INFORMATION DISCLOSURE STATEMENT (IDS) FILED			
9	06/09/2003	CASE DOCKETED TO EXAMINER IN GAU			
8	05/30/2003	APPLICATION DISPATCHED FROM OIPE			
7	05/29/2003	APPLICATION IS NOW COMPLETE			

6	05/15/2003	CLEARED BY L&R (LARS)			
5	05/14/2003	IFW SCAN & PACR AUTO SECURITY REVIEW			
4	05/03/2003	IFW SCAN & PACR AUTO SECURITY REVIEW			
3	04/23/2003	CRF IS GOOD TECHNICALLY / ENTERED INTO DATABASE			
2	04/16/2003	CRF DISK HAS BEEN RECEIVED BY PREEXAM / GROUP / PCT			
1	04/16/2003	INITIAL EXAM TEAM NN			

Search Another: Application# Search

EXPLANATION OF PTA CALCULATION

EXPLANATION OF PTE CALCULATION

To go back use Back button on your browser toolbar.

Back to PALM | ASSIGNMENT | OASIS | Home page

UNITED STATES PATENT AND TRADEMARK OFFICE

Commissioner for Patents
United States Patent and Trademark Office
P.O. Box 1450
Alexandria, VA 22313-1450
www.uspto.gov

KELLY & HUBBARD
1515 COMMERCE STREET
FORT WORTH, TX 76102

COPY MAILED
JUL 19 2006
OFFICE OF PETITIONS

In re Application of	:	
Gerald R. Bradley	:	
Application No. 10/414,388	:	ON PETITION
Filed: April 15, 2003	:	
Attorney Docket No. P-B016	:	

This is a decision on the petition under 37 CFR 1.137(b), filed January 6, 2006, to revive the above-identified application.

The application became abandoned for failure to respond to the Notice of Non-Compliant Amendment mailed December 2, 2004. A Notice of Abandonment was mailed on November 29, 2005.

The petition satisfies the requirements of 37 CFR 1.137(b) in that petitioner has supplied (1) the reply in the form of an amendment; (2) the petition fee of $750; and (3) an adequate statement of unintentional delay. Therefore, the petition is **GRANTED**.

It is not apparent whether the statement of unintentional delay was signed by a person who would have been in a position of knowing that the entire delay in filing the required reply from the due date for the reply until the filing of a grantable petition pursuant to 37 CFR 1.137(b) was unintentional. Nevertheless, in accordance with 37 CFR 10.18, the statement is accepted as constituting a certification of unintentional delay. However, in the event that petitioner has no knowledge that the delay was unintentional, petitioner must make such an inquiry to ascertain that, in fact, the delay was unintentional. If petitioner discovers that the delay was intentional, petitioner must so notify the Office.

Also, there is no indication that the person signing the instant petition was ever given a power of attorney or authorization of agent to prosecute the above-identified application. In accordance with 37 CFR 1.34(a), the signature appearing on the petition shall constitute a representation to the United States Patent and Trademark Office that he/she is authorized to represent the particular party in whose behalf he/she acts. However, if petitioner desires to receive future

correspondence regarding this application, the appropriate power of attorney or authorization of agent must be submitted. A courtesy copy of this decision is being mailed to petitioner. Nevertheless, all future correspondence regarding this application file will be directed solely to the address of record until otherwise instructed.

This application file is being referred to Technology Center Art Unit 3721, for review of the amendment filed with the instant petition.

Telephone inquiries concerning this decision should be directed to the undersigned at (571) 272-3226.

Andrea Smith
Petitions Examiner
Office of Petitions

cc: Gregory W. Carr
900 Jackson Street – Suite 670
Dallas, TX 75202

UNITED STATES PATENT AND TRADEMARK OFFICE

Commissioner for Patents
United States Patent and Trademark Office
P.O. Box 1450
Alexandria, VA 22313-1450
www.uspto.gov

KELLY & HUBBARD
1515 COMMERCE STREET
FORT WORTH, TX 76102

COPY MAILED
JUL 20 2006
OFFICE OF PETITIONS

In re Application of	:	
Gerald R. Bradley	:	
Application No. 10/414,388	:	DECISION ON PETITION
Filed: April 15, 2003	:	TO MAKE SPECIAL UNDER
Attorney Docket No. P-B016	:	37 CFR 1.102(d)
	:	

This is a decision on the petition under 37 CFR §1.102(d), filed June 19, 2006, to make the above-identified application special based on actual infringement as set forth in M.P.E.P. § 708.02, Section II.

The petition is **GRANTED.**

A grantable petition to make an application special under 37 CFR §1.102(d) and MPEP §708.02, Section II: Infringement, must be accompanied by the required fee pursuant to 37 CFR 1.17(h) and a statement by the applicant, assignee, or attorney/agent registered to practice before the office alleging:

> (A) That there is an infringing device or product actually on the market or method in use;
>
> (B) That a rigid comparison of the alleged infringing device, product, or method with the claims of the application has been made, and that, in his or her opinion, some of the claims are unquestionably infringed; and
>
> (C) That he or she has made or caused to be made a careful and thorough search of the prior art or has a good knowledge of the pertinent prior art.
>
> Applicant must provide one copy of each of the references deemed most closely related to the subject matter encompassed by the claims if said references are not already of record.

The petition complies with all the above stated requirements. Accordingly, the above-identified application has been accorded "special" status.

There is no indication that the person signing the instant petition was ever given a power of attorney or authorization of agent to prosecute the above-identified application. In accordance with 37 CFR 1.34(a), the signature appearing on the petition shall constitute a representation to the United States Patent and Trademark Office that he/she is authorized to represent the particular party in whose behalf he/she acts. However, if petitioner desires to receive future correspondence regarding this application, the appropriate power of attorney or authorization of agent must be submitted. A courtesy copy of this decision is being mailed to petitioner. Nevertheless, all future correspondence regarding this application file will be directed solely to the address of record until otherwise instructed.

The application is being forwarded to the Technology Center Art Unit 3721 for action on the merits commensurate with this decision.

Telephone inquiries concerning this decision should be directed to Andrea Smith at 571-272-3226.

All other inquiries concerning either the examination or status of the application should be directed to the Technology Center.

Andrea Smith
Petitions Examiner
Office of Petitions

Conferee:

cc: Theodore F. Shields
Carr LLP
670 Founders Square
900 Jackson Street
Dallas, TX 75202

UNITED STATES PATENT AND TRADEMARK OFFICE

DAC

Commissioner for Patents
United States Patent and Trademark Office
P.O. Box 1450
Alexandria, VA 22313-1450
www.uspto.gov

OIPE IAP96
AUG 07 2006
PATENT & TRADEMARK OFFICE

KELLY & HUBBARD
1515 COMMERCE STREET
FORT WORTH, TX 76102

COPY MAILED
JUL 20 2006
OFFICE OF PETITIONS

In re Application of	:	
Gerald R. Bradley	:	
Application No. 10/414,388	:	DECISION ON PETITION
Filed: April 15, 2003	:	TO MAKE SPECIAL UNDER
Attorney Docket No. P-B016	:	37 CFR 1.102(d)
	:	

This is a decision on the petition under 37 CFR §1.102(d), filed June 19, 2006, to make the above-identified application special based on actual infringement as set forth in M.P.E.P. § 708.02, Section II.

The petition is **GRANTED.**

A grantable petition to make an application special under 37 CFR §1.102(d) and MPEP §708.02, Section II: Infringement, must be accompanied by the required fee pursuant to 37 CFR 1.17(h) and a statement by the applicant, assignee, or attorney/agent registered to practice before the office alleging:

> (A) That there is an infringing device or product actually on the market or method in use;
>
> (B) That a rigid comparison of the alleged infringing device, product, or method with the claims of the application has been made, and that, in his or her opinion, some of the claims are unquestionably infringed; and
>
> (C) That he or she has made or caused to be made a careful and thorough search of the prior art or has a good knowledge of the pertinent prior art.
>
> Applicant must provide one copy of each of the references deemed most closely related to the subject matter encompassed by the claims if said references are not already of record.

The petition complies with all the above stated requirements. Accordingly, the above-identified application has been accorded "special" status.

There is no indication that the person signing the instant petition was ever given a power of attorney or authorization of agent to prosecute the above-identified application. In accordance with 37 CFR 1.34(a), the signature appearing on the petition shall constitute a representation to the United States Patent and Trademark Office that he/she is authorized to represent the particular party in whose behalf he/she acts. However, if petitioner desires to receive future correspondence regarding this application, the appropriate power of attorney or authorization of agent must be submitted. A courtesy copy of this decision is being mailed to petitioner. Nevertheless, all future correspondence regarding this application file will be directed solely to the address of record until otherwise instructed.

The application is being forwarded to the Technology Center Art Unit 3721 for action on the merits commensurate with this decision.

Telephone inquiries concerning this decision should be directed to Andrea Smith at 571-272-3226.

All other inquiries concerning either the examination or status of the application should be directed to the Technology Center.

Andrea Smith
Petitions Examiner
Office of Petitions

Conferee:

cc: Theodore F. Shields
Carr LLP
670 Founders Square
900 Jackson Street
Dallas, TX 75202

SPE RESPONSE FOR CERTIFICATE OF CORRECTION

DATE : 7/9/09

Paper No.: —

TO SPE OF : ART UNIT 3738

SUBJECT : Request for Certificate of Correction for Appl. No.: 10/414417 Patent No.: 7122041 B2

Please respond to this request for a certificate of correction within 7 days.

FOR IFW FILES:

Please review the requested changes/corrections as shown in the **COCIN** document(s) in the IFW application image. No new matter should be introduced, nor should the scope or meaning of the claims be changed.

Please complete the response (see below) and forward the completed response to scanning using document code **COCX**.

FOR PAPER FILES:

Please review the requested changes/corrections as shown in the attached certificate of correction. Please complete this form (see below) and forward it with the file to:

Certificates of Correction Branch (C of C)
Randolph Square 9D62-B
Palm Location 7580

Virginia Tolbert
Certificates of Correction Branch
703-756-1591

Thank You For Your Assistance

The request for issuing the above-identified correction(s) is hereby:
Note your decision on the appropriate box.

- ☐ **Approved** — **All** changes apply.
- ☐ **Approved in Part** — Specify below which changes **do not** apply.
- ☐ **Denied** — State the reasons for denial below.

Comments: _____

/Christopher D. Prone/ 7/21/09 3738

SPE **Art Unit**

UNITED STATES PATENT AND TRADEMARK OFFICE

COMMISSIONER FOR PATENTS
UNITED STATES PATENT AND TRADEMARK OFFICE
P.O. BOX 1450
ALEXANDRIA, VA 22313-1450
www.uspto.gov

NAWROCKI, ROONEY & SIVERTSON
SUITE 401, BROADWAY PLACE EAST
3433 BROADWAY STREET NORTHEAST
MINNEAPOLIS, MN 55413-3009

COPY MAILED
MAY 14 2008
OFFICE OF PETITIONS

In re Application of
Mark J. Whalen, et al.
Application No. 10/414,423
Filed: April 15, 2003
Attorney Docket No. 25064/101/102

ON PETITION

This is a decision on the petition under 37 CFR 1.137(b) to revive the above-identified application, filed January 22, 2008.

The petition is **GRANTED**.

The application became abandoned for failure s to timely pay the issue fee on or before December 12, 2007, as required by the Notice of Allowance and Fee(s) Due, mailed September 12, 2007, which set a statutory period for reply of three (3) months. A Notice of Abandonment was mailed on January 11, 2008. On January 22, 2008, the present petition was filed.

The petition is found to comply with the requirements of 37 CFR 1.137(b) in that petitioner has supplied (1) the reply in the form of the $720 issue fee; (2) the petition fee of $770; and (3) an adequate statement of unintentional delay.

The application is being referred to the Office of Data Management to be processed into a patent.

Telephone inquires related to this decision should be directed to the undersigned at (571) 272-3204. Telephone inquiries related to processing as a patent should be directed to (571) 272-4200.

Sherry D. Brinkley
Petitions Examiner
Office of Petitions

UNITED STATES PATENT AND TRADEMARK OFFICE

COMMISSIONER FOR PATENTS
UNITED STATES PATENT AND TRADEMARK OFFICE
P.O. BOX 1450
ALEXANDRIA, VA 22313-1450
www.uspto.gov

GILBRETH & ASSOCIATES, P.C.
P.O. Box 2428
Bellaire, TX 77402-2428

COPY MAILED

MAR 2 2 2005

OFFICE OF PETITIONS

In re Application of :
March A. Vettraino :
Application No. 10/414,426 : ON PETITION
Filed: April 15, 2003 :
Attorney Docket No. 27420/04 :

This is a decision on the petition, filed December 20, 2004, to revive the above-identified application under the provisions of 37 CFR 1.137(b).

The application became abandoned for a failure to reply in a timely manner to the non-final Office action mailed March 11, 2004. A Notice of Abandonment was mailed on October 8, 2004.

The petition is found to comply with the requirements of 37 CFR 1.137(b). Accordingly, the petition is **GRANTED**.

Telephone inquiries concerning this decision may be directed to the undersigned at (571) 272-3204. All other inquiries regarding this application should be directed to the Technology Center.

The application file is being forwarded to Technology Center AU 3632 for consideration of the amendment filed December 20, 2004.

Sherry D. Brinkley
Petitions Examiner
Office of Petitions
Office of the Deputy Commissioner
for Patent Examination Policy

UNITED STATES PATENT AND TRADEMARK OFFICE

Commissioner for Patents
United States Patent and Trademark Office
P.O. Box 1450
Alexandria, VA 22313-1450
www.uspto.gov

COPY MAILED

MAR 12 2008

OFFICE OF PETITIONS

FISH & RICHARDSON P.C.
P.O. BOX 1022
MINNEAPOLIS MN 55440-1022

In re Application of	:	
WEIGAND, Gilbert G.	:	
Application No. 10/414,435	:	DECISION ON PETITION
Filed: April 15, 2003	:	TO WITHDRAW
Attorney Docket No. **06975-274001 / NETWORK 20**	:	FROM RECORD

This is a decision on the Request to Withdraw as attorney or agent of record under 37 C.F.R. § 1.36(b), filed November 14, 2007.

The request is **APPROVED**.

A grantable request to withdraw as attorney/agent of record must be signed by every attorney/agent seeking to withdraw or contain a clear indication that one attorney is signing on behalf of another/others. A request to withdraw will not be approved unless at least 30 (thirty) days would remain between the date of approval and the later of the expiration date of a time to file a response or the expiration date of the maximum time period which can be extended under 37 C.F.R. § 1.136(a).

The request was signed by Babak Akhlaghi. Babak Akhlaghi has been withdrawn as attorneys or agents of record all other attorneys remain of record. The correspondence address of record remains unchanged.

Telephone inquiries concerning this decision should be directed to Tredelle Jackson at 571-272-2783.

Tredelle D. Jackson
Petitions Examiner
Office of Petitions

UNITED STATES PATENT AND TRADEMARK OFFICE

Commissioner for Patents
United States Patent and Trademark Office
P.O. Box 1450
Alexandria, VA 22313-1450
www.uspto.gov

VIERRA MAGEN MARCUS & DENIRO LLP
575 MARKET STREET SUITE 2500
SAN FRANCISCO CA 94105

COPY MAILED

JAN 10 2008

OFFICE OF PETITIONS

In re Application of	:	
Robert Lewis et al	:	
Application No. 10/414,440	:	DECISION GRANTING PETITION
Filed: April 15, 2003	:	UNDER 37 CFR 1.137(b)
Attorney Docket No. TOOLZ-01106US0	:	

This is a decision on the petition under 37 CFR 1.137(b), filed June 18, 2007, to revive the above-identified application.

The petition is **GRANTED**.

The petition satisfies the conditions for revival pursuant to the provisions of 37 CFR 1.137(b) in that (1) the reply in the form of an amendment; (2) the petition fee; and (3) the required statement of unintentional delay have been received. Accordingly, the reply to the Final Rejection of October 10, 2006, is accepted as having been unintentionally delayed.

Telephone inquiries concerning this decision should be directed to the undersigned at (571) 272-3208.

This matter is being referred to Technology Center AU 3662 for the mailing of the Nonfinal Rejection of June 25, 2007.

Karen Creasy

Karen Creasy
Petitions Examiner
Office of Petitions

SPE RESPONSE FOR CERTIFICATE OF CORRECTION

DATE : 7/30/09

Paper No.: —

TO SPE OF : ART UNIT 3662

SUBJECT : Request for Certificate of Correction for Appl. No.: 10/414,440 Patent No.: 7499150B2

Please respond to this request for a certificate of correction within 7 days.

FOR IFW FILES:

Please review the requested changes/corrections as shown in the **COCIN** document(s) in the IFW application image. No new matter should be introduced, nor should the scope or meaning of the claims be changed.

Please complete the response (see below) and forward the completed response to scanning using document code **COCX**.

FOR PAPER FILES:

Please review the requested changes/corrections as shown in the attached certificate of correction. Please complete this form (see below) and forward it with the file to:

Certificates of Correction Branch (C of C)
Randolph Square 9D62-B
Palm Location 7580

Virginia Tolbert
Certificates of Correction Branch
703-756-1591

Thank You For Your Assistance

The request for issuing the above-identified correction(s) is hereby:
Note your decision on the appropriate box.

- ☒ **Approved** — All changes apply.
- ☐ **Approved in Part** — Specify below which changes **do not** apply.
- ☐ **Denied** — State the reasons for denial below.

Comments: _____

Thomas N. Tarry
SPE

3662
Art Unit

UNITED STATES PATENT AND TRADEMARK OFFICE

COMMISSIONER FOR PATENTS
UNITED STATES PATENT AND TRADEMARK OFFICE
P.O. BOX 1450
ALEXANDRIA, VA 22313-1450
WWW.USPTO.GOV

PAPER NO. 4

ROPES & GRAY LLP
ONE INTERNATIONAL PLACE
BOSTON, MA 02110-2624

COPY MAILED

JUL 0 2 2003

OFFICE OF PETITIONS

In re Application of
William A. Goddard, et al.
Application No. 10/414,452
Filed: April 14, 2003
Attorney Docket No. CTCH-P01-009

DECISION GRANTING PETITION

This is a decision on petition filed June 30, 2003, requesting that the above-identified application be accorded a filing date of April 14, 2003, instead of the presently accorded date of April 15, 2003.

Petitioners allege that the application was deposited in "Express Mail" service with the U. S. Postal Service, on April 14, 2003. In support, petitioners provide, inter alia, a copy of the Express Mail label, receipt no. EV 256413785 US, showing a handwritten "Date-In" of 4-14-03, as well as an US Postal Service receipt stamp dated "APR 14 2003." The same Express Mail receipt number is referred to in the original application papers found in the file. Petitioners request that the application be accorded a filing date of April 14, 2003.

The Office considers the date the paper or fee is shown to have been deposited as "Express Mail" to be the "Date In" on the Express Mail label, MPEP 513. That is the date that verifies that the package was actually mailed. The evidence is convincing that the application was deposited as "Express Mail" with the US Postal Service on April 14, 2003.

The petition is GRANTED.

The application is being returned to Initial Patent Examination Division (OIPE) for correction of the filing date to **April 14, 2003** and for further consideration of the Request for Corrected Filing Receipt filed June 30, 2003.

Applicants are reminded that the time period set in the Notice to File Missing Parts of Nonprovisional Application mailed June 12, 2003, continues to run.

Telephone inquires related to this decision should be directed to the undersigned at (703) 305-9220. Telephone inquiries related to OIPE processing should be directed to their hotline at (703) 308-1202.

Sherry D. Brinkley
Sherry D. Brinkley
Petitions Examiner
Office of Petitions
Office of the Deputy Commissioner
for Patent Examination Policy

UNITED STATES PATENT AND TRADEMARK OFFICE

Commissioner for Patents
United States Patent and Trademark Office
P.O. Box 1450
Alexandria, VA 22313-1450
www.uspto.gov

SWANSON & BRATSCHUN
1745 SHEA CENTER DRIVE
SUITE 330
HIGHLANDS RANCH CO 80129

COPY MAILED
MAY 3 0 2006
OFFICE OF PETITIONS

In re Application of	:	
David Bar-Or et al	:	
Application No. 10/414,469	:	ON PETITION
Filed: April 15, 2003	:	
Attorney Docket No. ISC007PCUSD2	:	

This is a decision on the petition, filed May 26, 2006, under 37 CFR 1.313(c)(2) to withdraw the above-identified application from issue after payment of the issue fee.

The petition is **GRANTED.**

The above-identified application is withdrawn from issue for consideration of a submission under 37 CFR 1.114 (request for continued examination). See 37 CFR 1.313(c)(2).

Petitioner is advised that the issue fee paid on March 17, 2006, in the above-identified application cannot be refunded. If, however, the above-identified application is again allowed, petitioner may request that it be applied towards the issue fee required by the new Notice of Allowance.[1]

Telephone inquiries should be directed to the undersigned at (571) 272-3208.

The examiner of Technology Center AU 1645 will consider the request for continued examination under 37 CFR 1.114.

Karen Creasy

Karen Creasy
Petitions Examiner
Office of Petitions

---

[1] The request to apply the issue fee to the new Notice may be satisfied by completing and returning the new Issue Fee Transmittal Form PTOL-85(b), which includes the following language thereon: "Commissioner for Patents is requested to apply the Issue Fee and Publication Fee (if any) or re-apply any previously paid issue fee to the application identified above." Petitioner is advised that, whether a fee is indicated as being due or not, the Issue Fee Transmittal Form **must** be completed and timely submitted to avoid abandonment. Note the language in bold text on the first page of the Notice of Allowance and Fee(s) Due (PTOL-85).

DATE 8/26/07 APPLICATION NUMBER 10/414475

DOC CODE petd-c PVS DOC DATE

DELIVER THE ATTACHED FIFLE/DOCUMENT TO THE TC SCANNING CENTER

CONTRACTOR: THE ATTACHED FILE/DOCUMENT MUST BE INDEXED AND SCANNED INTO IFW WITHIN **8** WORK HOURS; UPLOADING OF THE SCANNED IMAGES SHOULD OCCUR NO - LATER THAN **16** WORK HOURS FOLLOWING RECEIPT OF THIS REQUEST

AFTER SCANNING, ORIGINAL DOCUMENTS SHOULD BE BOXED IN ACCORDANCE WITH INSTRUCTIONS

UNITED STATES PATENT AND TRADEMARK OFFICE

COMMISSIONER FOR PATENTS
UNITED STATES PATENT AND TRADEMARK OFFICE
P.O. BOX 1450
ALEXANDRIA, VA 22313-1450
www.uspto.gov

FINNEGAN, HENDERSON, FARABOW, GARRETT & DUNNER LLP
901 NEW YORK AVENUE, NW
WASHINGTON DC 20001-4413

COPY MAILED

AUG 28 2007

OFFICE OF PETITIONS

In re Application of	:
Hogberg, et al.	: DECISION ON APPLICATION
Application No. 10/414,475	: FOR PATENT TERM ADJUSTMENT
Filed: April 16, 2003	:
Atty. Dkt. No: 4914.0046	:

This is a decision on the "APPLICATION FOR PATENT TERM ADJUSTMENT 37 CFR § 1.705(b)," filed March 30, 2007.

The application for patent term adjustment ("PTA") under 37 CFR 1.705(b) is hereby **GRANTED**.

Applicants argue that the application is entitled to an adjustment of 454 days, rather than 440 days as indicated in the Determination of Patent Term Adjustment mailed January 19, 2007. Applicants further argue that the adjustment of 454 days was improperly reduced 14 days in connection with the Notice of Appeal filed August 17, 2006

The correct patent term adjustment (PTA) at the time of the allowance is 454 days, as argued by applicants. The Office will adjust the PAIR screen to reflect that the PTA determination at the time of mailing of the instant letter reflects an adjustment of 454 days. A copy of the updated PAIR screen showing the correct determination is enclosed.

A review of the record reveals that applicants are correct. As uncontested by applicants, the application is entitled to an adjustment of 454 days in accordance with 37 CFR 1.702(a)(1) in connection with the mailing of the restriction requirement on September 13, 2005.

The adjustment of 454 days was errantly reduced 14 days in connection with the Notice of Appeal filed August 17, 2006. The Notice of Appeal was timely filed within the meaning of 37 CFR 1.704(b) in response to the final Office action re-mailed May 15, 2006.

Accordingly, at the time of allowance, the application is entitled to an adjustment of 454 days, as argued by applicants.

The Office hereby acknowledges receipt of the required $200.00 patent term adjustment application fee.

The patent term adjustment indicated in the patent will include any additional patent term accrued pursuant to §§ 1.702(a)(4) and 1.702(b).

The application file is being forwarded to the Office of Patent Publication for issuance of a patent.

Telephone inquiries specific to this matter should be directed to Petitions Attorney Alesia M. Brown at (571) 272-3205.

Kery Fries

Kery Fries
Senior Legal Advisor
Office of Patent Legal Administration
Office of Deputy Commissioner
for Patent Examination Policy

Enclosure: Copy of Adjustment PAIR Calculation

Day : Monday
Date: 8/27/2007

PALM INTRANET

Time: 15:41:37

PTA Calculations for Application: 10/414475			
Application Filing Date:	04/16/2003	PTO Delay (PTO):	454
Issue Date of Patent:		Three Years:	0
Pre-Issue Petitions:	0	Applicant Delay (APPL):	14
Post-Issue Petitions:	0	Total PTA (days):	454
PTO Delay Adjustment:	14		

File Contents History

Number	Date	Contents Description	PTO	APPL	START
62	08/27/2007	ADJUSTMENT OF PTA CALCULATION BY PTO	14		
49	01/19/2007	MAIL NOTICE OF ALLOWANCE			
48	01/19/2007	MAIL EXAMINER'S AMENDMENT			
47	01/08/2007	ISSUE REVISION COMPLETED			
46	01/08/2007	NOTICE OF ALLOWANCE DATA VERIFICATION COMPLETED			
45	01/08/2007	CASE DOCKETED TO EXAMINER IN GAU			
44	12/27/2006	EXAMINER INTERVIEW SUMMARY RECORD (PTOL - 413)			
43	01/05/2007	EXAMINER'S AMENDMENT COMMUNICATION			
42	01/05/2007	NOTICE OF ALLOWABILITY			
41	12/20/2006	APPEAL BRIEF REVIEW COMPLETE			
40	12/20/2006	DATE FORWARDED TO EXAMINER			
39	11/16/2006	APPEAL BRIEF FILED			
38	11/16/2006	REQUEST FOR EXTENSION OF TIME - GRANTED			
36	08/17/2006	NOTICE OF APPEAL FILED		14	33
35	05/17/2006	MAIL NOTICE OF RESTARTED RESPONSE PERIOD			
34	05/15/2006	LETTER RESTARTING PERIOD FOR RESPONSE (I.E. LETTER RE: REFERENCES)			
33	05/03/2006	MAIL FINAL REJECTION (PTOL - 326)			
32	05/01/2006	FINAL REJECTION			
31	03/27/2006	DATE FORWARDED TO EXAMINER			
30	03/22/2006	RESPONSE AFTER NON-FINAL ACTION			
25	12/22/2005	MAIL NON-FINAL REJECTION			
24	12/20/2005	NON-FINAL REJECTION			

23	11/21/2005	DATE FORWARDED TO EXAMINER			
22	11/14/2005	RESPONSE TO ELECTION / RESTRICTION FILED			
21	11/14/2005	REQUEST FOR EXTENSION OF TIME - GRANTED			
20	09/13/2005	MAIL RESTRICTION REQUIREMENT	454		-1
19	09/12/2005	REQUIREMENT FOR RESTRICTION / ELECTION			
18	04/25/2005	MISCELLANEOUS INCOMING LETTER			
17	04/08/2005	CORRESPONDENCE ADDRESS CHANGE			
16	03/07/2005	INFORMATION DISCLOSURE STATEMENT (IDS) FILED			
15	01/22/2005	CASE DOCKETED TO EXAMINER IN GAU			
14	11/04/2004	TRANSFER INQUIRY TO GAU			
13	05/01/2004	TRANSFER INQUIRY TO GAU			
12	03/03/2004	IFW AMENDED CASE PROCESSING COMPLETE			
11	01/13/2004	REFERENCE CAPTURE ON IDS			
10	01/13/2004	INFORMATION DISCLOSURE STATEMENT (IDS) FILED			
9	11/05/2003	APPLICATION IS NOW COMPLETE			
8	11/05/2003	APPLICATION DISPATCHED FROM OIPE			
7	11/05/2003	APPLICATION IS NOW COMPLETE			
6	09/08/2003	ADDITIONAL APPLICATION FILING FEES			
5	09/08/2003	A STATEMENT BY ONE OR MORE INVENTORS SATISFYING THE REQUIREMENT UNDER 35 USC 115, OATH OF THE APPLIC			
4	06/10/2003	NOTICE MAILED--APPLICATION INCOMPLETE--FILING DATE ASSIGNED			
2	05/01/2003	IFW SCAN & PACR AUTO SECURITY REVIEW			
1	04/16/2003	INITIAL EXAM TEAM NN			

Search Another: Application# [ ] Search

EXPLANATION OF PTA CALCULATION

EXPLANATION OF PTE CALCULATION

To go back use Back button on your browser toolbar.

Back to PALM | ASSIGNMENT | OASIS | Home page

UNITED STATES PATENT AND TRADEMARK OFFICE

MAY 0 8 2009

Commissioner for Patents
United States Patent and Trademark Office
P.O. Box 1450
Alexandria, VA 22313-1450
www.uspto.gov

LAW OFFICE OF MICHAEL A. SANZO, LLC
15400 CALHOUN DR.
SUITE 125
ROCKVILLE MD 208558

In re Application of:	:
John Plachetka	:
Serial No.: 10/414,493	: PETITION DECISION
Filed: April 16, 2003	:
Attorney Docket No.: **7569/80252**	

This is in response to the petition under 37 CFR § 1.59(b), filed May 4, 2009, to expunge information from the above identified application. This application has not been allowed.

Petitioner requests that the information submitted to the Patent Office on May 4, 2009, be expunged from the record. Petitioner states either: (A) that the information contains trade secret material, proprietary material and/or material that is subject to a protective order which has not been made public; or (B) that the information submitted was unintentionally submitted and the failure to obtain its return would cause irreparable harm to the party who submitted the information or to the party in interest on whose behalf the information was submitted, and the information has not otherwise been made public. The petition fee set forth in 37 CFR § 1.17(g) has been paid.

This is an examined application which is currently under non-final rejection. As such the information provided has been reviewed, in part, but proceedings in the application have not been terminated. As stated in M.P.E.P. 724, upon allowance or other action closing prosecution in an application, petition may be made for return of Proprietary information. The information cannot be expunged at this time.

The petition is **DISMISSED**. Petitioner may resubmit the petition subsequent to a Notice of Allowability or *ex parte Quayle* action being mailed in the application. No additional petition fee will be required at that time.

Should there be any questions about this decision please contact Marianne C. Seidel by letter addressed to Director, TC 1600, at the address listed above, or by telephone at 571-272-0584 or by facsimile sent to the general Office facsimile number, 703-872-9306.

Marianne C. Seidel
Quality Assurance Specialist
Technology Center 1600

UNITED STATES PATENT AND TRADEMARK OFFICE

JUN 26 2009

Commissioner for Patents
United States Patent and Trademark Office
P.O. Box 1450
Alexandria, VA 22313-1450
www.uspto.gov

LAW OFFICE OF MICHAEL A. SANZO, LLC
15400 CALHOUN DR.
SUITE 125
ROCKVILLE MD 208558

In re Application of:	:
John Plachetka	:
Serial No.: 10/414,493	: PETITION DECISION
Filed: April 16, 2003	:
Attorney Docket No.: **7569/80252**	

This is in response to the renewed petition under 37 CFR § 1.59(b), filed June 12, 2009, to reverse the dismissal decision of May 8, 2009.

Petitioner argues that the Petition to Expunge filed May 4, 2009 should have been held in abeyance and not dismissed. Accordingly, petitioner requests that the dismissal decision be reversed and the decision to expunge be held in abeyance until such time as the application is allowed.

M.P.E.P. 724 recites that upon allowance or other action closing prosecution in an application, petition may be made for return of Proprietary information. It is noted that this application remains under non-final rejection, and as such proceedings in the application have not been terminated. Accordingly, since prosecution has not closed, this petition in considered untimely and the information cannot be expunged at this time.

Accordingly, the petition is again **DISMISSED**. Petitioner may resubmit the petition subsequent to a Notice of Allowability, *ex parte Quayle* action being mailed in the application, or other action closing prosecution. No additional petition fee will be required at that time.

Should there be any questions about this decision please contact Marianne C. Seidel by letter addressed to Director, TC 1600, at the address listed above, or by telephone at 571-272-0584 or by facsimile sent to the general Office facsimile number, 703-872-9306.

Marianne C. Seidel
Quality Assurance Specialist
Technology Center 1600

UNITED STATES PATENT AND TRADEMARK OFFICE

UNITED STATES DEPARTMENT OF COMMERCE
United States Patent and Trademark Office
Address: COMMISSIONER FOR PATENTS
P.O. Box 1450
Alexandria, Virginia 22313-1450
www.uspto.gov

APPLICATION NO.	FILING DATE	FIRST NAMED INVENTOR	ATTORNEY DOCKET NO.	CONFIRMATION NO.
10/414,493	04/16/2003	John R. Plachetka	7569/80252	6021

66991 7590 08/31/2009
LAW OFFICE OF MICHAEL A. SANZO, LLC
15400 CALHOUN DR.
SUITE 125
ROCKVILLE, MD 20855

EXAMINER
ROBERTS, LEZAH

ART UNIT	PAPER NUMBER
1612	

MAIL DATE	DELIVERY MODE
08/31/2009	PAPER

Please find below and/or attached an Office communication concerning this application or proceeding.

The time period for reply, if any, is set in the attached communication.

UNITED STATES PATENT AND TRADEMARK OFFICE

Commissioner for Patents
United States Patent and Trademark Office
P.O. Box 1450
Alexandria, VA 22313-1450
www.uspto.gov

LAW OFFICE OF MICHAEL A. SANZO, LLC
15400 CALHOUN DR.
SUITE 125
ROCKVILLE MD 20855

AUG 3 1 2009

In re Application of:
John R.Plachetka
Serial No.: 10/414,493
Filed: April 16, 2003
Attorney Docket No.: **7569/80252**

: PETITION DECISION

This is in response to the petition under 37 CFR § 1.59(b), filed August 21, 2009, to expunge information from the above identified application. This application has not been allowed.

Petitioner requests that the Reply to Request for Information under 37 CFR 1.105, and attachment thereto, submitted to the Patent Office on August 21, 2009, be expunged from the record. Petitioner states either: (A) that the information contains trade secret material, proprietary material and/or material that is subject to a protective order which has not been made public; or (B) that the information submitted was unintentionally submitted and the failure to obtain its return would cause irreparable harm to the party who submitted the information or to the party in interest on whose behalf the information was submitted, and the information has not otherwise been made public. The petition fee set forth in 37 CFR § 1.17(g) has been paid.

This is an examined application which is currently under non-final rejection. As such the information provided has been reviewed, in part, but proceedings in the application have not been terminated. As stated in M.P.E.P. 724, upon allowance or other action closing prosecution in an application, petition may be made for return of Proprietary information. The information cannot be expunged at this time.

The petition is **DISMISSED**. Petitioner may resubmit the petition subsequent to a Notice of Allowability or *ex parte Quayle* action being mailed in the application. No additional petition fee will be required at that time.

Should there be any questions about this decision please contact Marianne C. Seidel by letter addressed to Director, TC 1600, at the address listed above, or by telephone at 571-272-0584 or by facsimile sent to the general Office facsimile number, 703-872-9306.

Marianne C. Seidel
Quality Assurance Specialist
Technology Center 1600

UNITED STATES PATENT AND TRADEMARK OFFICE

Commissioner for Patents
United States Patent and Trademark Office
P.O. Box 1450
Alexandria, VA 22313-1450
www.uspto.gov

SEP 10 2009

LAW OFFICE OF MICHAEL A. SANZO, LLC
15400 CALHOUN DR.
SUITE 125
ROCKVILLE MD 20855

In re Application of:
John R. Plachetka
Serial No.: 10/414,493
Filed: April 16, 2003
Attorney Docket No.: **7569/80252**

: PETITION DECISION

This is in response to the petition under 37 CFR § 1.59(b), filed September 2, 2009, to expunge information from the above identified application. This application has not been allowed.

Petitioner requests that information subject to a protective order submitted to the Patent Office on September 2, 2009 be expunged from the record. Petitioner states either: (A) that the information contains trade secret material, proprietary material and/or material that is subject to a protective order which has not been made public; or (B) that the information submitted was unintentionally submitted and the failure to obtain its return would cause irreparable harm to the party who submitted the information or to the party in interest on whose behalf the information was submitted, and the information has not otherwise been made public. The petition fee set forth in 37 CFR § 1.17(g) has been paid.

This is an examined application which is currently under non-final rejection. As such the information provided has been reviewed, in part, but proceedings in the application have not been terminated. As stated in M.P.E.P. 724, upon allowance or other action closing prosecution in an application, petition may be made for return of Proprietary information. The information cannot be expunged at this time.

The petition is **DISMISSED**. Petitioner may resubmit the petition subsequent to a Notice of Allowability or *ex parte Quayle* action being mailed in the application. No additional petition fee will be required at that time.

Should there be any questions about this decision please contact Marianne C. Seidel by letter addressed to Director, TC 1600, at the address listed above, or by telephone at 571-272-0584 or by facsimile sent to the general Office facsimile number, 703-872-9306.

Marianne C. Seidel
Quality Assurance Specialist
Technology Center 1600

UNITED STATES PATENT AND TRADEMARK OFFICE

OCT 2 2 2009

Commissioner for Patents
United States Patent and Trademark Office
P.O. Box 1450
Alexandria, VA 22313-1450
www.uspto.gov

LAW OFFICE OF MICHAEL A. SANZO, LLC
15400 CALHOUN DR.
SUITE 125
ROCKVILLE MD 20855

In re Application of:
John R. Plachetka
Serial No.: 10/414,493
Filed: April 16, 2003
Attorney Docket No.: **7569/80252**

: PETITION DECISION

This is in response to the petition under 37 CFR § 1.59(b), filed October 16, 2009, to expunge information from the above identified application. This application has not been allowed.

Petitioner requests that information subject to a protective order submitted to the Patent Office on October 16, 2009 be expunged from the record. Petitioner states either: (A) that the information contains trade secret material, proprietary material and/or material that is subject to a protective order which has not been made public; or (B) that the information submitted was unintentionally submitted and the failure to obtain its return would cause irreparable harm to the party who submitted the information or to the party in interest on whose behalf the information was submitted, and the information has not otherwise been made public. The petition fee set forth in 37 CFR § 1.17(g) has been paid.

This is an examined application which is currently under non-final rejection. As such the information provided has been reviewed, in part, but proceedings in the application have not been terminated. As stated in M.P.E.P. 724, upon allowance or other action closing prosecution in an application, petition may be made for return of Proprietary information. The information cannot be expunged at this time.

The petition is **DISMISSED**. Petitioner may resubmit the petition subsequent to a Notice of Allowability or *ex parte Quayle* action being mailed in the application. No additional petition fee will be required at that time.

Should there be any questions about this decision please contact Marianne C. Seidel by letter addressed to Director, TC 1600, at the address listed above, or by telephone at 571-272-0584 or by facsimile sent to the general Office facsimile number, 703-872-9306.

Marianne C. Seidel
Quality Assurance Specialist
Technology Center 1600

UNITED STATES PATENT AND TRADEMARK OFFICE

Commissioner for Patents
United States Patent and Trademark Office
P.O. Box 1450
Alexandria, VA 22313-1450
www.uspto.gov

LAW OFFICE OF MICHAEL A. SANZO, LLC
15400 CALHOUN DR.
SUITE 125
ROCKVILLE MD 208558

Mailed 11/3/09

In re Application of:
John Plachetka
Serial No.: 10/414,493
Filed: April 16, 2003
Attorney Docket No.: **7569/80252**

: PETITION DECISION

This is in response to the renewed petition under 37 CFR § 1.59(b), filed October 29, 2009, to reverse the dismissal decision of August 31, 2009.

Petitioner argues that the Petition to Expunge filed August 31, 2009 should have been held in abeyance and not dismissed. Accordingly, petitioner requests that the dismissal decision be reversed and the decision to expunge be held in abeyance until such time as the application is allowed.

M.P.E.P. 724 recites that upon allowance or other action closing prosecution in an application, petition may be made for return of Proprietary information. It is noted that this application remains under non-final rejection, and as such proceedings in the application have not been terminated. Accordingly, since prosecution has not closed, this petition in considered untimely and the information cannot be expunged at this time.

Furthermore, petitioner argues that "MPEP §724.06 (copy attached as Exhibit C) describes the handling of Petitions to Expunge. This states that:

> The decision on the petition to expunge should be held in abeyance until the application is allowed or an *Ex parte Quayle* action, or a Notice of Abandonment is mailed, at which time the petition will be decided.

In light of the above, Applicant submits that the Petition to Expunge should have been held in abeyance and not dismissed. It is therefore respectfully submitted that the dismissal decision be reversed. The Petition should be held in abeyance until such time as the application is allowed and decided at that time."

Petitioner's argument has been carefully considered but it is not persuasive. It is noted that MPEP §724.06 clearly states "Where the information to be expunged **was not** (emphasis added) submitted pursuant to MPEP §724.02 or as part of an Information Disclosure Statement, the petition should be sent to the Office of Petitions for decision. The decision on the petition to expunge should be held in abeyance until the application is allowed or an *Ex parte Quayle* action, or a Notice of abandonment is mailed, at which time the petition will be decided.....".

However, in the instant case, the information **was** submitted pursuant to MPEP §724.02 so the petition need not be sent to the Office of Petitions for decision.

Accordingly, the petition is again **DISMISSED**. Petitioner may resubmit the petition subsequent to a Notice of Allowability, *ex parte Quayle* action being mailed in the application, or other action closing prosecution. No additional petition fee will be required at that time.

Should there be any questions about this decision please contact Marianne C. Seidel by letter addressed to Director, TC 1600, at the address listed above, or by telephone at 571-272-0584 or by facsimile sent to the general Office facsimile number, 703-872-9306.

Marianne C. Seidel
Quality Assurance Specialist
Technology Center 1600

UNITED STATES PATENT AND TRADEMARK OFFICE

Commissioner for Patents
United States Patent and Trademark Office
P.O. Box 1450
Alexandria, VA 22313-1450
www.uspto.gov

DEC 16 2009

LAW OFFICE OF MICHAEL A. SANZO, LLC
15400 CALHOUN DR.
SUITE 125
ROCKVILLE MD 20855

In re Application of:
John R. Plachetka
Serial No.: 10/414,493
Filed: April 16, 2003
Attorney Docket No.: **7569/80252**

: PETITION DECISION

This is in response to the petition under 37 CFR § 1.59(b), filed December 4, 2009, to expunge information from the above identified application. This application has not been allowed.

Petitioner requests that information subject to a protective order submitted to the Patent Office on December 4, 2009 be expunged from the record. Petitioner states either: (A) that the information contains trade secret material, proprietary material and/or material that is subject to a protective order which has not been made public; or (B) that the information submitted was unintentionally submitted and the failure to obtain its return would cause irreparable harm to the party who submitted the information or to the party in interest on whose behalf the information was submitted, and the information has not otherwise been made public. The petition fee set forth in 37 CFR § 1.17(g) has been paid.

This is an examined application which is currently under non-final rejection. As such the information provided has been reviewed, in part, but proceedings in the application have not been terminated. As stated in M.P.E.P. 724, upon allowance or other action closing prosecution in an application, petition may be made for return of Proprietary information. The information cannot be expunged at this time.

The petition is **DISMISSED**. Petitioner may resubmit the petition subsequent to a Notice of Allowability or *ex parte Quayle* action being mailed in the application. No additional petition fee will be required at that time.

Should there be any questions about this decision please contact Marianne C. Seidel by letter addressed to Director, TC 1600, at the address listed above, or by telephone at 571-272-0584 or by facsimile sent to the general Office facsimile number, 703-872-9306.

Marianne C. Seidel
Quality Assurance Specialist
Technology Center 1600

UNITED STATES PATENT AND TRADEMARK OFFICE

UNITED STATES DEPARTMENT OF COMMERCE
United States Patent and Trademark Office
Address: COMMISSIONER FOR PATENTS
P.O. Box 1450
Alexandria, Virginia 22313-1450
www.uspto.gov

APPLICATION NO.	FILING DATE	FIRST NAMED INVENTOR	ATTORNEY DOCKET NO.	CONFIRMATION NO.
10/414,493	04/16/2003	John R. Plachetka	7569/80252	6021

66991 7590 03/17/2010
LAW OFFICE OF MICHAEL A. SANZO, LLC
15400 CALHOUN DR.
SUITE 125
ROCKVILLE, MD 20855

EXAMINER
ROBERTS, LEZAH

ART UNIT	PAPER NUMBER
1612	

MAIL DATE	DELIVERY MODE
03/17/2010	PAPER

Please find below and/or attached an Office communication concerning this application or proceeding.

The time period for reply, if any, is set in the attached communication.

UNITED STATES PATENT AND TRADEMARK OFFICE

MAR 1 7 2010

Commissioner for Patents
United States Patent and Trademark Office
P.O. Box 1450
Alexandria, VA 22313-1450
www.uspto.gov

LAW OFFICE OF MICHAEL A. SANZO, LLC
15400 CALHOUN DR.
SUITE 125
ROCKVILLE MD 20855

In re Application of:	:
John R. Plachetka	:
Serial No.: 10/414,493	: PETITION DECISION
Filed: April 16, 2003	:
Attorney Docket No.: **7569/80252**	

This is in response to the petition under 37 CFR § 1.59(b), filed March 4, 2010, to expunge information from the above identified application. This application has not been allowed.

Petitioner requests that the documents submitted to the Patent Office on March 4, 2010, be expunged from the record. Petitioner states either: (A) that the information contains trade secret material, proprietary material and/or material that is subject to a protective order which has not been made public; or (B) that the information submitted was unintentionally submitted and the failure to obtain its return would cause irreparable harm to the party who submitted the information or to the party in interest on whose behalf the information was submitted, and the information has not otherwise been made public. The petition fee set forth in 37 CFR § 1.17(g) has been paid.

This is an examined application which is currently under non-final rejection. As such the information provided has been reviewed, in part, but proceedings in the application have not been terminated. As stated in M.P.E.P. 724, upon allowance or other action closing prosecution in an application, petition may be made for return of Proprietary information. The information cannot be expunged at this time.

The petition is **DISMISSED**. Petitioner may resubmit the petition subsequent to a Notice of Allowability or *ex parte Quayle* action being mailed in the application. No additional petition fee will be required at that time.

Should there be any questions about this decision please contact Marianne C. Seidel by letter addressed to Director, TC 1600, at the address listed above, or by telephone at 571-272-0584 or by facsimile sent to the general Office facsimile number, 703-872-9306.

Marianne C. Seidel
Quality Assurance Specialist
Technology Center 1600

UNITED STATES PATENT AND TRADEMARK OFFICE

UNITED STATES DEPARTMENT OF COMMERCE
United States Patent and Trademark Office
Address: COMMISSIONER FOR PATENTS
P.O. Box 1450
Alexandria, Virginia 22313-1450
www.uspto.gov

APPLICATION NO.	FILING DATE	FIRST NAMED INVENTOR	ATTORNEY DOCKET NO.	CONFIRMATION NO.
10/414,493	04/16/2003	John R. Plachetka	7569/80252	6021

66991 7590 05/21/2010
LAW OFFICE OF MICHAEL A. SANZO, LLC
15400 CALHOUN DR.
SUITE 125
ROCKVILLE, MD 20855

EXAMINER
ROBERTS, LEZAH

ART UNIT	PAPER NUMBER
1612	

MAIL DATE	DELIVERY MODE
05/21/2010	PAPER

Please find below and/or attached an Office communication concerning this application or proceeding.

The time period for reply, if any, is set in the attached communication.

UNITED STATES PATENT AND TRADEMARK OFFICE

Commissioner for Patents
United States Patent and Trademark Office
P.O. Box 1450
Alexandria, VA 22313-1450
www.uspto.gov

MAY 21 2010

LAW OFFICE OF MICHAEL A. SANZO, LLC
15400 CALHOUN DR.
SUITE 125
ROCKVILLE MD 20855

In re Application of:	:
John R. Plachetka	:
Serial No.: 10/414,493	: PETITION DECISION
Filed: April 16, 2003	:
Attorney Docket No.: **7569/80252**	

This is in response to the petition under 37 CFR § 1.59(b), filed May 11, 2010, to expunge information from the above identified application. This application has not been allowed.

Petitioner requests that the documents submitted to the Patent Office on May 11, 2010, be expunged from the record. Petitioner states either: (A) that the information contains trade secret material, proprietary material and/or material that is subject to a protective order which has not been made public; or (B) that the information submitted was unintentionally submitted and the failure to obtain its return would cause irreparable harm to the party who submitted the information or to the party in interest on whose behalf the information was submitted, and the information has not otherwise been made public. The petition fee set forth in 37 CFR § 1.17(g) has been paid.

This is an examined application which is currently under non-final rejection. As such the information provided has been reviewed, in part, but proceedings in the application have not been terminated. As stated in M.P.E.P. 724, upon allowance or other action closing prosecution in an application, petition may be made for return of Proprietary information. The information cannot be expunged at this time.

The petition is **DISMISSED**. Petitioner may resubmit the petition subsequent to a Notice of Allowability or *ex parte Quayle* action being mailed in the application. No additional petition fee will be required at that time.

Should there be any questions about this decision please contact Marianne C. Seidel by letter addressed to Director, TC 1600, at the address listed above, or by telephone at 571-272-0584 or by facsimile sent to the general Office facsimile number, 703-872-9306.

Marianne C. Seidel
Quality Assurance Specialist
Technology Center 1600

UNITED STATES PATENT AND TRADEMARK OFFICE

UNITED STATES DEPARTMENT OF COMMERCE
United States Patent and Trademark Office
Address: COMMISSIONER FOR PATENTS
P.O. Box 1450
Alexandria, Virginia 22313-1450
www.uspto.gov

APPLICATION NO.	FILING DATE	FIRST NAMED INVENTOR	ATTORNEY DOCKET NO.	CONFIRMATION NO.
10/414,493	04/16/2003	John R. Plachetka	7569/80252	6021

66991 7590 05/25/2010
LAW OFFICE OF MICHAEL A. SANZO, LLC
15400 CALHOUN DR.
SUITE 125
ROCKVILLE, MD 20855

EXAMINER
ROBERTS, LEZAH

ART UNIT	PAPER NUMBER
1612	

MAIL DATE	DELIVERY MODE
05/25/2010	PAPER

Please find below and/or attached an Office communication concerning this application or proceeding.

The time period for reply, if any, is set in the attached communication.

UNITED STATES PATENT AND TRADEMARK OFFICE

Commissioner for Patents
United States Patent and Trademark Office
P.O. Box 1450
Alexandria, VA 22313-1450
www.uspto.gov

MAY 2 5 2010

LAW OFFICE OF MICHAEL A. SANZO, LLC
15400 CALHOUN DR.
SUITE 125
ROCKVILLE MD 20855

In re Application of:	:
John R. Plachetka	:
Serial No.: 10/414,493	: PETITION DECISION
Filed: April 16, 2003	:
Attorney Docket No.: **7569/80252**	

This is in response to the petition under 37 CFR § 1.59(b), filed May 19, 2010, to expunge information from the above identified application. This application has not been allowed.

Petitioner requests that the documents submitted to the Patent Office on May 19, 2010, be expunged from the record. Petitioner states either: (A) that the information contains trade secret material, proprietary material and/or material that is subject to a protective order which has not been made public; or (B) that the information submitted was unintentionally submitted and the failure to obtain its return would cause irreparable harm to the party who submitted the information or to the party in interest on whose behalf the information was submitted, and the information has not otherwise been made public. The petition fee set forth in 37 CFR § 1.17(g) has been paid.

This is an examined application which is currently under non-final rejection. As such the information provided has been reviewed, in part, but proceedings in the application have not been terminated. As stated in M.P.E.P. 724, upon allowance or other action closing prosecution in an application, petition may be made for return of Proprietary information. The information cannot be expunged at this time.

The petition is **DISMISSED**. Petitioner may resubmit the petition subsequent to a Notice of Allowability or *ex parte Quayle* action being mailed in the application. No additional petition fee will be required at that time.

Should there be any questions about this decision please contact Marianne C. Seidel by letter addressed to Director, TC 1600, at the address listed above, or by telephone at 571-272-0584 or by facsimile sent to the general Office facsimile number, 703-872-9306.

Marianne C. Seidel
Quality Assurance Specialist
Technology Center 1600

UNITED STATES PATENT AND TRADEMARK OFFICE

UNITED STATES DEPARTMENT OF COMMERCE
United States Patent and Trademark Office
Address: COMMISSIONER FOR PATENTS
P.O. Box 1450
Alexandria, Virginia 22313-1450
www.uspto.gov

APPLICATION NO.	FILING DATE	FIRST NAMED INVENTOR	ATTORNEY DOCKET NO.	CONFIRMATION NO.
10/414,493	04/16/2003	John R. Plachetka	7569/80252	6021

66991 7590 07/02/2010
LAW OFFICE OF MICHAEL A. SANZO, LLC
15400 CALHOUN DR.
SUITE 125
ROCKVILLE, MD 20855

EXAMINER
ROBERTS, LEZAH

ART UNIT	PAPER NUMBER
1612	

MAIL DATE	DELIVERY MODE
07/02/2010	PAPER

Please find below and/or attached an Office communication concerning this application or proceeding.

The time period for reply, if any, is set in the attached communication.

UNITED STATES PATENT AND TRADEMARK OFFICE

Commissioner for Patents
United States Patent and Trademark Office
P.O. Box 1450
Alexandria, VA 22313-1450
www.uspto.gov

LAW OFFICE OF MICHAEL A. SANZO, LLC
15400 CALHOUN DR.
SUITE 125
ROCKVILLE MD 20855

JUL - 1 2010

In re Application of:
John R. Plachetka
Serial No.: 10/414,493
Filed: April 16, 2003
Attorney Docket No.: **7569/80252**

: PETITION DECISION

This is in response to the petition under 37 CFR § 1.59(b), filed June 25, 2010, to expunge information from the above identified application. This application has not been allowed.

Petitioner requests that the documents submitted to the Patent Office on June 25, 2010, be expunged from the record. Petitioner states either: (A) that the information contains trade secret material, proprietary material and/or material that is subject to a protective order which has not been made public; or (B) that the information submitted was unintentionally submitted and the failure to obtain its return would cause irreparable harm to the party who submitted the information or to the party in interest on whose behalf the information was submitted, and the information has not otherwise been made public. The petition fee set forth in 37 CFR § 1.17(g) has been paid.

This is an examined application which is currently under non-final rejection. As such the information provided has been reviewed, in part, but proceedings in the application have not been terminated. As stated in M.P.E.P. 724, upon allowance or other action closing prosecution in an application, petition may be made for return of Proprietary information. The information cannot be expunged at this time.

The petition is **DISMISSED**. Petitioner may resubmit the petition subsequent to a Notice of Allowability or *ex parte Quayle* action being mailed in the application. No additional petition fee will be required at that time.

Should there be any questions about this decision please contact Marianne C. Seidel by letter addressed to Director, TC 1600, at the address listed above, or by telephone at 571-272-0584 or by facsimile sent to the general Office facsimile number, 703-872-9306.

Marianne C. Seidel
Quality Assurance Specialist
Technology Center 1600

UNITED STATES PATENT AND TRADEMARK OFFICE

UNITED STATES DEPARTMENT OF COMMERCE
United States Patent and Trademark Office
Address: COMMISSIONER FOR PATENTS
P.O. Box 1450
Alexandria, Virginia 22313-1450
www.uspto.gov

APPLICATION NO.	FILING DATE	FIRST NAMED INVENTOR	ATTORNEY DOCKET NO.	CONFIRMATION NO.
10/414,493	04/16/2003	John R. Plachetka	7569/80252	6021

66991 7590 07/13/2010
LAW OFFICE OF MICHAEL A. SANZO, LLC
15400 CALHOUN DR.
SUITE 125
ROCKVILLE, MD 20855

EXAMINER
ROBERTS, LEZAH

ART UNIT	PAPER NUMBER
1612	

MAIL DATE	DELIVERY MODE
07/13/2010	PAPER

Please find below and/or attached an Office communication concerning this application or proceeding.

The time period for reply, if any, is set in the attached communication.

UNITED STATES PATENT AND TRADEMARK OFFICE

Commissioner for Patents
United States Patent and Trademark Office
P.O. Box 1450
Alexandria, VA 22313-1450
www.uspto.gov

JUL 1 3 2010

LAW OFFICE OF MICHAEL A. SANZO, LLC
15400 CALHOUN DR.
SUITE 125
ROCKVILLE MD 20855

In re Application of:
John R. Plachetka
Serial No.: 10/414,493
Filed: April 16, 2003
Attorney Docket No.: **7569/80252**

: PETITION DECISION

This is in response to the petition under 37 CFR § 1.59(b), filed July 2, 2010, to expunge information from the above identified application. This application has not been allowed.

Petitioner requests that the documents submitted to the Patent Office on July 2, 2010, be expunged from the record. Petitioner states either: (A) that the information contains trade secret material, proprietary material and/or material that is subject to a protective order which has not been made public; or (B) that the information submitted was unintentionally submitted and the failure to obtain its return would cause irreparable harm to the party who submitted the information or to the party in interest on whose behalf the information was submitted, and the information has not otherwise been made public. The petition fee set forth in 37 CFR § 1.17(g) has been paid.

This is an examined application which is currently under non-final rejection. As such the information provided has been reviewed, in part, but proceedings in the application have not been terminated. As stated in M.P.E.P. 724, upon allowance or other action closing prosecution in an application, petition may be made for return of Proprietary information. The information cannot be expunged at this time.

The petition is **DISMISSED**. Petitioner may resubmit the petition subsequent to a Notice of Allowability or *ex parte Quayle* action being mailed in the application. No additional petition fee will be required at that time.

Should there be any questions about this decision please contact Marianne C. Seidel by letter addressed to Director, TC 1600, at the address listed above, or by telephone at 571-272-0584 or by facsimile sent to the general Office facsimile number, 703-872-9306.

Marianne C. Seidel
Quality Assurance Specialist
Technology Center 1600

UNITED STATES PATENT AND TRADEMARK OFFICE

UNITED STATES DEPARTMENT OF COMMERCE
United States Patent and Trademark Office
Address: COMMISSIONER FOR PATENTS
P.O. Box 1450
Alexandria, Virginia 22313-1450
www.uspto.gov

APPLICATION NUMBER	FILING OR 371 (c) DATE	FIRST NAMED APPLICANT	ATTY. DOCKET NO./TITLE
10/414,505	04/15/2003	James A. Gleeson	HARD1.006C1

CONFIRMATION NO. 9449

OC000000021256565

20995
KNOBBE MARTENS OLSON & BEAR LLP
2040 MAIN STREET
FOURTEENTH FLOOR
IRVINE, CA 92614

Date Mailed: 11/16/2006

NOTICE REGARDING CHANGE OF POWER OF ATTORNEY

This is in response to the Power of Attorney filed 08/15/2006.

- The withdrawal as attorney in this application has been accepted. Future correspondence will be mailed to the new address of record. 37 CFR 1.33.

MONICA A GRAVES
OP (571) 272-7253

FORMER ATTORNEY/AGENT COPY

UNITED STATES PATENT AND TRADEMARK OFFICE

Commissioner for Patents
United States Patent and Trademark Office
P.O. Box 1450
Alexandria, VA 22313-1450
www.uspto.gov

KNOBBE MARTENS OLSON & BEAR LLP
2040 MAIN STREET, FOURTEENTH FLOOR
IRVINE CA 92614

COPY MAILED

NOV 16 2006

OFFICE OF PETITIONS

In re Application of
GLEESON, et al.
Application No. 10/414,505
Filed: April 15, 2003
Attorney Docket No. HARD1.006C1

DECISION ON PETITION
TO WITHDRAW
FROM RECORD

This is a decision on the Request to Withdraw as attorney or agent of record under 37 C.F.R. § 1.36(b), filed August 15, 2006.

The request is **APPROVED**.

A grantable request to withdraw as attorney/agent of record must be signed by every attorney/agent seeking to withdraw or contain a clear indication that one attorney is signing on behalf of another/others. A request to withdraw will not be approved unless at least 30 (thirty) days would remain between the date of approval and the later of the expiration date of a time to file a response or the expiration date of the maximum time period which can be extended under 37 C.F.R. § 1.136(a).

The request was signed by Linda H. Liu on behalf of all attorneys of record. All attorneys/agents associated have been withdrawn.

Applicant is reminded that there is no attorney of record at this time.

The request to change the correspondence of record is not acceptable as the requested correspondence address is not that of: (1) the first named signing inventor; or (2) an intervening assignee of the entire interest under 37 C.F.R 3.71. All future communications from the Office will be directed to the first named signing inventor at the first copied address below until otherwise properly notified by the applicant.

There is an outstanding Office action mailed August 15, 2006 that requires a reply from the applicant.

Telephone inquiries concerning this decision should be directed to the undersigned at 571-272-7253.

Monica A. Graves
Petitions Examiner
Office of Petitions

cc: **JAMES A. GLEESON**
10801 LEMON AVENUE
ALTA LOMA, CA 91737

cc: **JAMES HARDIE**
GARDERE WYNNE SEWELL, LLP
1601 ELM STREET, SUITE 3000
DALLAS, TX 75201

UNITED STATES PATENT AND TRADEMARK OFFICE

UNITED STATES DEPARTMENT OF COMMERCE
United States Patent and Trademark Office
Address: COMMISSIONER FOR PATENTS
P.O. Box 1450
Alexandria, Virginia 22313-1450
www.uspto.gov

GARDERE / JHTL
GARDERE WYNNE SEWELL, LLP
1601 ELM STREET
SUITE 3000
DALLAS, TX 75201

Mail Date: 04/21/2010

Applicant	: James A. Gleeson	: DECISION ON REQUEST FOR
Patent Number	: 7658794	: RECALCULATION of PATENT
Issue Date	: 02/09/2010	: TERM ADJUSTMENT IN VIEW
Appliction No	: 10/414,505	: OF WYETH AND NOTICE OF INTENT TO
Filed	: 04/15/2003	: ISSUE CERTIFICATE OF CORRECTION
		:

The Request for Recalculation is **GRANTED** to the extent indicated.

The patent term adjustment has been determined to be **0** days. The USPTO will *sua sponte* issue a certificate of correction reflecting the amount of PTA days determined by the recalculation.

Prior to the issuance of the certificate of correction, the USPTO will afford patentee an opportunity to be heard and request reconsideration. Accordingly, patentee has **one month or thirty (30) days**, whichever is longer, to file a request for reconsideration of this patent term adjustment calculation. See 35 U.S.C. 154(b)(3)(B)(ii) and 37 CFR 1.322(a)(4). No extensions of time will be granted under 37 CFR 1.136.

Patentee should use document code PET.OP if electronically filing a request for reconsideration of this patent term adjustment calculation. The patentee must also include the information required by 37 CFR 1.705(b)(2) and the fee required by 37 CFR 1.18(e). If patentee does not file a timely request for reconsideration of this patent term adjustment calculation including the information required by 37 CFR 1.705(b)(2) and the fee required by 37 CFR 1.18(e), the USPTO will issue a certificate of correction reflecting the PTA determination noted above.

Patentee should be aware that in order to preserve the right to review in the United States District Court for the District of Columbia of the USPTO patent term adjustment determination, patentee must ensure that he or she also take the steps required under 35 U.S.C. 154(b)(4)(A) in a timely manner. Nothing in the request for recalculation should be construed as providing an alternative time frame for commencing a civil action under 35 U.S.C. 154(b)(4)(A).

Any questions concerning this decision should be directed to the Office of Patent Legal Administration at 571-272-7702.

OIPE IAP82
DEC 0 6 2005
PATENT & TRADEMARK OFFICE

AH

1616

PTO/SB/83 (04-05)
Approved for use through 11/30/2005. OMB 0651-0035
U.S. Patent and Trademark Office, U.S. DEPARTMENT OF COMMERCE
Under the Paperwork Reduction Act of 1995, no persons are required to respond to a collection of information unless it displays a valid OMB control number.

REQUEST FOR WITHDRAWAL AS ATTORNEY OR AGENT AND CHANGE OF CORRESPONDENCE ADDRESS

Application Number	10/414,519
Filing Date	April 14, 2003
First Named Inventor	Metz
Art Unit	1616
Examiner Name	Jones
Attorney Docket Number	00-1326-K

To: Commissioner for Patents
P.O. Box 1450
Alexandria, VA 22313-1450

Please withdraw me as attorney or agent for the above identified patent application, and

☐ all the attorneys/agents of record.

☐ the attorneys/agents (with registration numbers) listed on the attached paper(s), or

☒ the attorneys/agents associated with Customer Number 20306

NOTE: This box can only be checked when the power of attorney of record in the application is to all the practitioners associated with a customer number.

The reasons for this request are: The assignee (MIICRO, Inc.) of the applicant/patent has changed their phone number and has moved. We have not been able to locate or contact them through diligent efforts.

CORRESPONDENCE ADDRESS

APPROVED
1/06/06
WILLIAM R. DIXON, JR.
SPECIAL PROGRAM EXAMINER

1. ☒ The correspondence address is NOT affected by this withdrawal.
2. ☐ Change the correspondence address and direct all future correspondence to:

☐ The address associated with Customer Number:

OR

☐ Firm or Individual Name					
Address					
City		State		Zip	
Country					
Telephone			Email		
Signature					
Name	Lisa M.W. HIllman, Ph.D		Registration No.	43,673	
Date	12-2-05		Telephone No.	217 359 2998	

NOTE: Withdrawal is effective when approved rather than when received. Unless there are at least 30 days between approval of withdrawal and the expiration date of a time period for response or possible extension period, the request to withdraw is normally disapproved.

This collection of information is required by 37 CFR 1.36. The information is required to obtain or retain a benefit by the public which is to file (and by the USPTO to process) an application. Confidentiality is governed by 35 U.S.C. 122 and 37 CFR 1.11 and 1.14. This collection is estimated to take 12 minutes to complete, including gathering, preparing, and submitting the completed application form to the USPTO. Time will vary depending upon the individual case. Any comments on the amount of time you require to complete this form and/or suggestions for reducing this burden, should be sent to the Chief Information Officer, U.S. Patent and Trademark Office, U.S. Department of Commerce, P.O. Box 1450, Alexandria, VA 22313-1450. DO NOT SEND FEES OR COMPLETED FORMS TO THIS ADDRESS. SEND TO: **Commissioner for Patents, P.O. Box 1450, Alexandria, VA 22313-1450.**

If you need assistance in completing the form, call 1-800-PTO-9199 and select option 2.

UNITED STATES PATENT AND TRADEMARK OFFICE

Commissioner for Patents
United States Patent and Trademark Office
P.O. Box 1450
Alexandria, VA 22313-1450
www.uspto.gov

OCT 25 2005

FOLEY AND LARDNER LLP
SUITE 500
3000 K STREET NW
WASHINGTON DC 20007

In re Application of	:
Hannond et al.	:
Serial No.: 10/414,523	: PETITION TO MAKE SPECIAL
Filed: April 14, 2003	:
Attorney Docket No.: 221429	:

This is in response to applicants' petition filed October 12, 2005, to make the above-identified application special under the provisions of 37 CFR 1.102(d), based on inventions for countering terrorism (M.P.E.P. 708.02, XI). The $130.00 petition fee as required by 37 CFR 1.17(h) for countering terrorism was received.

Applicants have satisfied the provisions set forth in M.P.E.P. 708.02, XI. Therefore, the petition is **GRANTED**.

The application will be forwarded the examiner for action on the merits commensurate with this decision.

Should there be any questions with regard to this letter please contact Marianne C. Seidel by letter addressed to the Director, Technology Center 1600, P.O. Box 1450, Alexandria, VA 22313-1450, or by telephone at 571-272-0584 or by facsimile transmission at the general Office facsimile number, (703) 872-9306.

Marianne C. Seidel
Special Program Examiner
Technology Center 1600

UNITED STATES PATENT AND TRADEMARK OFFICE

Commissioner for Patents
United States Patent and Trademark Office
P.O. Box 1450
Alexandria, VA 22313-1450
www.uspto.gov

FOLEY AND LARDNER LLP
SUITE 500
3000 K STREET NW
WASHINGTON, DC 20007

COPY MAILED

JUL 3 1 2006

OFFICE OF PETITIONS

In re Application of	:	
David J. Hammond et al	:	
Application No. 10/414,523	:	DECISION ON PETITION
Filed: April 14, 2003	:	TO WITHDRAW
Attorney Docket No. 221429	:	FROM RECORD
	:	

This is a decision on the Request to Withdraw as attorney or agent of record under 37 C.F.R. § 1.36(b), filed April 3, 2006.

The request is **APPROVED**.

A grantable request to withdraw as attorney/agent of record must be signed by every attorney/agent seeking to withdraw or contain a clear indication that one attorney is signing on behalf of another/others. A request to withdraw will not be approved unless at least 30 (thirty) days would remain between the date of approval and the later of the expiration date of a time to file a response or the expiration date of the maximum time period which can be extended under 37 C.F.R. § 1.136(a).

The request was signed by Stephen A. Bent on behalf of all attorneys of record who are associated with Customer No. 22428.

Applicant is reminded that there is no attorney of record at this time.

There is an outstanding Office action mailed May 26, 2006 that requires a reply from the applicant.

All future correspondence will be directed to the first named inventor David J. Hammond at the first address indicated below.

Telephone inquiries concerning this decision should be directed to Irvin Dingle at (571) 272-3210.

for Denise Pothier
Petitions Examiner
Office of Petitions

cc: David J. Hammond
4916 Ripplemead Ct.
Laytonsville, MD 20882

cc: Merchant & Gould, P.C.
P.O. Box 2903
Minneapolis, MN 55402-0903

UNITED STATES PATENT AND TRADEMARK OFFICE

UNITED STATES DEPARTMENT OF COMMERCE
United States Patent and Trademark Office
Address: COMMISSIONER FOR PATENTS
P.O. Box 1450
Alexandria, Virginia 22313-1450
www.uspto.gov

APPLICATION NUMBER	FILING OR 371 (c) DATE	FIRST NAMED APPLICANT	ATTY. DOCKET NO./TITLE
10/414,523	04/14/2003	David J. Hammond	221429

CONFIRMATION NO. 5723

OC000000019807914

OC000000019807914

FOLEY AND LARDNER LLP
SUITE 500
3000 K STREET NW
WASHINGTON, DC 20007

Date Mailed: 07/28/2006

NOTICE REGARDING CHANGE OF POWER OF ATTORNEY

This is in response to the Power of Attorney filed 04/03/2006.

- The withdrawal as attorney in this application has been accepted. Future correspondence will be mailed to the new address of record. 37 CFR 1.33.

IRVIN DINGLE
OP (571) 272-3210

FORMER ATTORNEY/AGENT COPY

UNITED STATES PATENT AND TRADEMARK OFFICE

Commissioner for Patents
United States Patent and Trademark Office
P.O. Box 1450
Alexandria, VA 22313-1450
www.uspto.gov

FOLEY AND LARDNER LLP
3000 K STREET N.W., SUITE 500
WASHINGTON, DC 20007

COPY MAILED

AUG 21 2006

OFFICE OF PETITIONS

In re Application of	
David J. Hammond et al	
Application No. 10/414,524	DECISION ON PETITION
Filed: April 14, 2003	TO WITHDRAW
Attorney Docket No. 221948	FROM RECORD

This is a decision on the Request to Withdraw as attorney or agent of record under 37 C.F.R. § 1.36(b), filed April 3, 2006.

The request is **APPROVED**.

A grantable request to withdraw as attorney/agent of record must be signed by every attorney/agent seeking to withdraw or contain a clear indication that one attorney is signing on behalf of another/others. A request to withdraw will not be approved unless at least 30 (thirty) days would remain between the date of approval and the later of the expiration date of a time to file a response or the expiration date of the maximum time period which can be extended under 37 C.F.R. § 1.136(a).

The request was signed by Stephen A. Bent on behalf of all attorneys of record who are associated with Customer No. 22428.

Applicant is reminded that there is no attorney of record at this time.

The request to change the correspondence of record is not acceptable as the requested correspondence address is not that of: (1) the first named signing inventor; or (2) an intervening assignee of the entire interest under 37 C.F.R 3.71. All future communications from the Office will be directed to the first named signing inventor or the assignee of the entire interest at the first copied address below until otherwise properly notified by the applicant.

Telephone inquiries concerning this decision should be directed to Irvin Dingle at (571) 272-3210.

David Bucci
Petitions Examiner
Office of Petitions

cc: David J. Hammond
4916 Ripplemead Ct.
Laytonsville, MD 20882

cc: Merchant & Gould, P.C.
P.O. Box 2903
Minneapolis, MN 55402-0903

UNITED STATES PATENT AND TRADEMARK OFFICE

UNITED STATES DEPARTMENT OF COMMERCE
United States Patent and Trademark Office
Address: COMMISSIONER FOR PATENTS
P.O. Box 1450
Alexandria, Virginia 22313-1450
www.uspto.gov

APPLICATION NUMBER	FILING OR 371 (c) DATE	FIRST NAMED APPLICANT	ATTY. DOCKET NO./TITLE
10/414,524	04/14/2003	David J. Hammond	221948

CONFIRMATION NO. 5581

OC000000019943064

OC000000019943064

22428
FOLEY AND LARDNER LLP
SUITE 500
3000 K STREET NW
WASHINGTON, DC 20007

Date Mailed: 08/08/2006

NOTICE REGARDING CHANGE OF POWER OF ATTORNEY

This is in response to the Power of Attorney filed 04/03/2006.

- The withdrawal as attorney in this application has been accepted. Future correspondence will be mailed to the new address of record. 37 CFR 1.33.

IRVIN DINGLE
OP (571) 272-3210

FORMER ATTORNEY/AGENT COPY

UNITED STATES PATENT AND TRADEMARK OFFICE

Commissioner for Patents
United States Patent and Trademark Office
P.O. Box 1450
Alexandria, VA 22313-1450
www.uspto.gov

MARK D. BARRISH
TOWNSEND AND TOWNSEND AND CREW, LLP
TWO ENBARCADERO CENTER
EIGHTH FLOOR
SAN FRANCISCO, CA 94111-3834

MAILED

MAY 07 2009

OFFICE OF PETITIONS

In re Application of	:	
Ingle et al.	:	DECISION ON PETITION
Application No. 10/414,549	:	TO WITHDRAW
Filed: April 14, 2003	:	FROM RECORD
Attorney Docket No. 687-3012/US	:	

This is a decision on the Request to Withdraw as attorney or agent of record under 37 C.F.R. § 1.36(b), filed June 5, 2006.

The request is **NOT APPROVED** because it is moot.

A review of the file record indicates that on August 11, 2006 the power of attorney to Townsend and Townsend and Crew, LLP was revoked by the assignee of the patent application. Accordingly, the request to withdraw under 37 C.F.R. § 1.36(b) is moot.

All future communications from the Office will be directed to the below-listed address until otherwise notified by applicant.

Telephone inquires concerning this decision should be directed to the undersigned at 571-272-7751. All other inquires concerning either the examination or status of the application should be directed to the Technology Center.

Joan Olszewski

Joan Olszewski
Petitions Examiner
Office of Petitions

cc: Oppenheimer Wolff & Donnelly, LLP
45 South Seventh Street, Suite 3300
Minneapolis MN 55402

UNITED STATES PATENT AND TRADEMARK OFFICE

COMMISSIONER FOR PATENTS
UNITED STATES PATENT AND TRADEMARK OFFICE
P.O. BOX 1450
ALEXANDRIA, VA 22313-1450
WWW.USPTO.GOV

Paper No. None

Robert Brouillette
BROUILLETT KOSIE PRINCE
25th Floor
1100 Rene-Levesque Boulevard West
Montreal QC H3B 5C9 CA CANADA

COPY MAILED

AUG 1 5 2005

OFFICE OF PETITIONS

In re Application of :
Gilles Soucy et al. :
Application No. 10/414,557 :
Filed: April 15, 2003 :
Attorney Docket Number: 04104-015-US-02 :
Title: ENDLESS TRACK FOR A VEHICLE :

DECISION ON PETITION
UNDER 37 C.F.R. §1.137(b)

This is a decision on the petition filed April 8, 2005, pursuant to 37 C.F.R. §1.137(b)[1], to revive the above-identified application.

The above-identified application became abandoned for failure to reply in a timely manner to the non-final Office action, mailed July 12, 2004, which set a shortened statutory period for reply of three (3) months. No response was received, and no extensions of time under the provisions of 37 C.F.R. §1.136(a) were requested. Accordingly, the above-identified application became abandoned on October 13, 2004. A Notice of Abandonment was mailed March 11, 2005.

37 C.F.R. §1.137(b)(3) requires a statement that the entire delay in filing the required reply from the due date for the reply until the filing of a grantable petition pursuant to 37 C.F.R. §1.137(b) was unintentional. Since the statement contained in the instant petition varies from the language required by 37 C.F.R. §1.137(b)(3), the statement contained in the instant petition is being

1 A grantable petition pursuant to 37 CFR 1.137(b) must be accompanied by:
(1) The reply required to the outstanding Office action or notice, unless previously filed;
(2) The petition fee as set forth in § 1.17(m);
(3) A statement that the entire delay in filing the required reply from the due date for the reply until the filing of a grantable petition pursuant to this paragraph was unintentional. The Commissioner may require additional information where there is a question whether the delay was unintentional, and;
(4) Any terminal disclaimer (and fee as set forth in § 1.20(d)) required pursuant to paragraph (d) of this section.

construed as the statement required by 37 C.F.R. §1.137(b)(3) and petitioner must notify the Office if this is not a correct interpretation of the statement contained in the instant petition.

With the instant petition, Petitioner has filed the petition fee and has made a statement which is being construed as the proper statement of unintentional delay. Petitioner has met requirements (2) and (3) above. The fourth requirement does not apply.

Regarding the first requirement, the requirement has not been satisfied because Petitioner did not submit the required reply to the Office action. The required reply is the reply sufficient to have avoided abandonment, had such reply been timely filed[2]. In order for the application to be revived, petitioner must submit a reply which satisfies 37 C.F.R. §1.137(b)(1) (i.e., either an amendment or a response to the non-final communication of July 12, 2004, or the filing of a continuing application). Although the petition sets forth that a reply was included with the submission, a copy of the same has not been located in the electronic file.

As such, the petition must be **DISMISSED**.

Any reply must be submitted within **TWO (2) MONTHS** from the mail date of this decision. Extensions of time under 37 C.F.R. §1.136(a) are permitted. The reply should include a cover letter entitled "Renewed Petition Under 37 C.F.R. 1.137(b)". This is not a final agency action within the meaning of 5 U.S.C 704.

The renewed petition should indicate in a prominent manner that the attorney handling this matter is Paul Shanoski.

Any renewed petition may be submitted by mail[3], hand-delivery[4], or facsimile[5].

Telephone inquiries regarding *this decision* should be directed to the undersigned at (571) 272-3225. All other inquiries concerning examination procedures or status of the application should be directed to the Technology Center.

Paul Shanoski

Paul Shanoski
Senior Attorney
Office of Petitions
United States Patent and Trademark Office

---

2 See M.P.E.P. 711.03(c).

3 Mail Stop Petition, Commissioner for Patents, United States Patent and Trademark Office, P.O. Box 1450, Alexandria, VA, 22313-1450.

4 Customer Window, Randolph Building, 401 Dulaney Street, Alexandria, VA, 22314.

5 (703) 872-9306 - please note this is a central facsimile number. On July 15, 2005, the Central FAX Number changed to 571-273-8300. To give customers time to adjust to the new Central FAX Number, faxes sent to the old number (703-872-9306) will be routed to the new number until September 15, 2005.

UNITED STATES PATENT AND TRADEMARK OFFICE

COMMISSIONER FOR PATENTS
UNITED STATES PATENT AND TRADEMARK OFFICE
P.O. BOX 1450
ALEXANDRIA, VA 22313-1450
WWW.USPTO.GOV

Paper No. None

Robert Brouillette
BROUILLETT KOSIE PRINCE
1100 Rene-Levesque Boulevard West
Suite 2300
Montreal QC H3B 4N4 CA CANADA

COPY MAILED

SEP 06 2005

OFFICE OF PETITIONS

In re Application of :
Gilles Soucy et al. :
Application No. 10/414,557 :
Filed: April 15, 2003 :
Attorney Docket Number: 04104-015-US-02 :
Title: ENDLESS TRACK FOR A VEHICLE :

DECISION ON RENEWED PETITION
UNDER 37 C.F.R. §1.137(b)

This is a decision on the renewed petition, pursuant to 37 C.F.R. §1.137(b)[1], to revive the above-identified application, filed on August 24, 2005.

The above-identified application became abandoned for failure to reply in a timely manner to the non-final Office action, mailed July 12, 2004, which set a shortened statutory period for reply of three (3) months. No response was received, and no extensions of time under the provisions of 37 C.F.R. §1.136(a) were requested. Accordingly, the above-identified application became abandoned on October 13, 2004. A Notice of Abandonment was mailed March 11, 2005.

37 C.F.R. §1.137(b)(3) requires a statement that the entire delay in filing the required reply from the due date for the reply until the filing of a grantable petition pursuant to 37 C.F.R. §1.137(b) was unintentional. Since the statement contained in the instant petition varies from the language required by 37 C.F.R. §1.137(b)(3), the statement contained in the instant petition is being

1 A grantable petition pursuant to 37 CFR 1.137(b) must be accompanied by:
(1) The reply required to the outstanding Office action or notice, unless previously filed;
(2) The petition fee as set forth in § 1.17(m);
(3) A statement that the entire delay in filing the required reply from the due date for the reply until the filing of a grantable petition pursuant to this paragraph was unintentional. The Commissioner may require additional information where there is a question whether the delay was unintentional, and;
(4) Any terminal disclaimer (and fee as set forth in § 1.20(d)) required pursuant to paragraph (d) of this section.

construed as the statement required by 37 C.F.R. §1.137(b)(3) and petitioner must notify the Office if this is not a correct interpretation of the statement contained in the instant petition.

The original petition was filed on April 8, 2005, along with the petition fee a statement which was construed as the proper statement of unintentional delay. Petitioner met requirements (2) and (3) above. The fourth requirement does not apply. The original petition was dismissed via the mailing of a decision on August 15, 2005, for failing to include a reply.

With the present petition, Petitioner has indicated that the amendment which was submitted with the original petition contained the wrong serial number – the header of the amendment listed the serial number as 10/411,557. The electronic file has been reviewed, and it is clear that the amendment was received on April 8, 2005, and placed in the electronic file of this other application.

As such, the renewed petition is **GRANTED**.

Petitioner is reminded that errors such as occurred can result in loss of rights and care must be taken to avoid such.

The Change of Correspondence Address has been entered and made of record.

After the mailing of this decision, the amendment, Petitioner's remarks, and the change of correspondence address will be removed from 10/411,557 and placed into 10/414,557.

Telephone inquiries regarding *this decision* should be directed to the undersigned at (571) 272-3225. All other inquiries concerning examination procedures or status of the application should be directed to the Technology Center.

Paul Shanoski

Paul Shanoski
Senior Attorney
Office of Petitions
United States Patent and Trademark Office

09 AUG 2005

UNITED STATES PATENT AND TRADEMARK OFFICE

COMMISSIONER FOR PATENTS
UNITED STATES PATENT AND TRADEMARK OFFICE
P.O. BOX 1450
ALEXANDRIA, VA 22313-1450
www.uspto.gov

HOLLAND & HART, LLP
555 17TH STREET, SUITE 3200
DENVER, CO 80201

In re Application of VON SPRECKELSEN	:	
U.S. Application No.: 10/414,558	:	
PCT Application No.: PCT/GB00/04211	:	
Int. Filing Date: 02 November 2000	:	DECISION
Priority Date Claimed: (none)	:	
Attorney Docket No.: 44257.0002	:	
For: RESEALABLE GAS IMPERMEABLE	:	
SEALING ASSEMBLY	:	

This is in response to applicant's "Request for Certificate of Correction of Patent for PTO Mistake (37 CFR §1.322(a))" filed 16 June 2005.

BACKGROUND

On 02 November 2000, applicant filed international application PCT/GB00/04211. A copy of the international application was communicated to the USPTO from the International Bureau on 10 May 2002. The thirty-month period for paying the basic national fee in the United States expired on 02 May 2003.

On 09 April 2003, applicant filed purported national stage papers in the United States Designated/Elected Office (DO/EO/US). The submission included, *inter alia*, a "Utility Patent Application Transmittal" (Form PTO/SB/05) and an Application Data Sheet.

On 16 June 2005, applicant filed the present request for certificate of correction.

DISCUSSION

Any intended filing of an international application as a national stage application must clearly and unambiguously be identified as such and must satisfy all of the conditions set forth in 35 U.S.C. 371(c). The official USPTO Notice published in the Official Gazette at 1077 OG 13 entitled "Minimum Requirements for Acceptance of Applications Under 35 U.S.C. 371 (the National Stage of PCT)" states in relevant part:

> The Patent and Trademark Office is continuing to receive application papers which do not clearly identify whether the papers (1) are being submitted to enter the national stage of the Patent Cooperation Treaty (PCT) under 35

> U.S.C. 371 or (2) are being filed as a regular national application under 35 U.S.C. 111. . . .
>
> If there are any conflicting instructions as to which sections of the statute (371 or 111) is intended the application will be accepted under 35 U.S.C. 111. (Emphasis added.)

Form PTO/SB/05 filed 09 April 2003 states that the application is being submitted under 37 CFR 1.53(b). MPEP 201.06(c) states in relevant part:

> 37 CFR 1.53(b) is the section under which all applications are filed EXCEPT: (A) an application resulting from entry of an international application into the national stage under 35 U.S.C. 371 and 37 CFR 1.495. . . . Applications submitted under 37 CFR 1.53(b), as well as CPAs submitted under 37 CFR 1.53(d), are applications filed under 35 U.S.C. 111(a).

Although the Application Data Sheet filed 09 April 2003 identified the application as a national stage application being filed under 35 U.S.C. 371, the concurrent submission of the utility application transmittal letter (Form PTO/SB/05) is inconsistent with and would have contradicted any desire expressed in any papers that might have been filed to enter the national stage of the PCT under 35 U.S.C. 371. Accordingly, pursuant to MPEP 201.06(c), the papers filed on 09 April 2003 were properly accepted as a filing under 35 U.S.C. 111(a).

Applicant is not entitled to claim priority under 35 U.S.C. 365(a) and 35 U.S.C. 119(a) because the filing date of the present application (09 April 2003) is not within twelve months from the filing date of the international application (02 November 2000).

CONCLUSION

For the reasons above, the request for certificate of correction is DISMISSED without prejudice.

If reconsideration on the merits of the request is desired, a proper response must be filed within TWO (2) MONTHS from the mail date of this decision.

Please direct further correspondence with respect to this matter to Mail Stop PCT, Commissioner for Patents, Office of PCT Legal Administration, P.O. Box 1450, Alexandria, Virginia 22313-1450, with the contents of the letter marked to the attention of the Office of PCT Legal Administration.

Bryan Tung
PCT Legal Examiner
PCT Legal Office

Telephone: 571-272-3303
Facsimile: 571-273-0459

11 AUG 2006

UNITED STATES PATENT AND TRADEMARK OFFICE

COMMISSIONER FOR PATENTS
UNITED STATES PATENT AND TRADEMARK OFFICE
P.O. BOX 1450
ALEXANDRIA, VA 22313-1450
www.uspto.gov

HOLLAND & HART, LLP
P.O. BOX 8749
DENVER, CO 80201

In re Application of VON SPRECKELSEN	:	
U.S. Patent No.: 6,877,630	:	
U.S. Application No.: 10/414,558	:	
PCT Application No.: PCT/GB00/04211	:	DECISION
Int. Filing Date: 02 November 2000	:	
Priority Date Claimed: (none)	:	
Attorney Docket No.: 44257.0002	:	
For: RESEALABLE GAS IMPERMEABLE	:	
SEALING ASSEMBLY	:	

This is in response to applicant's "Petition to Accept an Unintentionally Delayed Claim Under 35 U.S.C. §120/365(c) (37 CFR §1.78(a)(3))" and "Request for Certificate of Correction of Applicant's Mistake (37 CFR §1.323)" filed 07 September 2005.

BACKGROUND

On 02 November 2000, applicant filed international application PCT/GB00/04211. A copy of the international application was communicated to the USPTO from the International Bureau on 10 May 2002. The thirty-month period for paying the basic national fee in the United States expired on 02 May 2003.

On 09 April 2003, applicant filed purported national stage papers in the United States Designated/Elected Office (DO/EO/US). The submission included, *inter alia*, a "Utility Patent Application Transmittal" (Form PTO/SB/05) and an application data sheet.

On 12 April 2005, the present application issued as U.S. Patent Number 6,877,630.

On 16 June 2005, applicant filed a request for a certificate of correction on grounds that the USPTO omitted certain national stage identifying information on the published patent.

On 09 August 2005, this Office mailed a decision dismissing the 16 June 2005 request. The decision stated that the papers filed 09 April 2003 did not unambiguously identify the submission as a national stage filing under 35 U.S.C. 371 and that the submission was properly accepted as a filing under 35 U.S.C. 111(a).

On 07 September 2005, applicant filed the present petition under 37 CFR 1.78(a)(3) and request for certificate of correction under 37 CFR 1.323.

On 18 October 2005, the USPTO issued a certificate of correction for U.S. Patent Number 6,877,630.

DISCUSSION

I. Petition Under 37 CFR 1.78(a)(3)

37 CFR 1.78(a)(3) states:

> If the reference required by 35 U.S.C. 120 and paragraph (a)(2) of this section is presented after the time period provided by paragraph (a)(2)(ii) of this section, the claim under 35 U.S.C. 120, 121, or 365(c) for the benefit of a prior-filed copending nonprovisional application or international application designating the United States of America may be accepted if the reference identifying the prior-filed application by application number or international application number and international filing date was unintentionally delayed. A petition to accept an unintentionally delayed claim under 35 U.S.C. 120, 121, or 365(c) for the benefit of a prior-filed application must be accompanied by:
>
> (i) The reference required by 35 U.S.C. 120 and paragraph (a)(2) of this section to the prior-filed application, unless previously submitted;
>
> (ii) The surcharge set forth in § 1.17(t); and
>
> (iii) A statement that the entire delay between the date the claim was due under paragraph (a)(2)(ii) of this section and the date the claim was filed was unintentional. The Director may require additional information where there is a question whether the delay was unintentional.

With regard to item (i) above, the requisite reference is not present. 37 CFR 1.78(a)(2)(i) specifies that a nonprovisional application claiming the benefit of a prior-filed international application designating the U.S. must contain or be amended to contain a reference to the prior-filed application, identifying it by the international application number and international filing date and indicating the relationship of the applications. The reference should be in the first line of the specification or in an application data sheet and should be in a form such as "This is a divisional (or continuation, or continuation-in-part, as appropriate) application of International Application No. ---, filed ---". See MPEP 201.11, §III A. In the present case, the first line of the specification and the application data sheet fail to state the relationship of the applications. See MPEP 201.11, §III A (stating, "To specify the relationship between the applications, applicant must specify whether the application is a continuation, divisional, or continuation-in-part of the prior application.") Additionally, the application data sheet incorrectly states that the present application is a national stage application filed under 35 U.S.C. 371. As set forth in the decision mailed 09 August 2005, the present application was properly accepted as a filing under 35 U.S.C 111(a). Accordingly, the 18 October 2005 certificate of correction issued was issued in error.

With regard to item (ii) above, the requisite surcharge has been provided.

With regard to item (iii) above, the statement contained in the petition is improper. In particular, the statement does not clearly specify the starting point of the period of unintentional delay.

II. Request for Certificate of Correction Under 37 CFR 1.323

The requested correction is improper because the present application is not a national stage filing under 35 U.S.C. 371. As set forth above, the present application was properly accepted as a filing under 35 U.S.C 111(a).

CONCLUSION

For the reasons set forth in §I above, the petition under 37 CFR 1.78(a)(3) is DISMISSED without prejudice.

For the reasons §II above, the request for certificate of correction under 37 CFR 1.323 is DISMISSED without prejudice.

Please direct further correspondence with respect to this matter to Mail Stop PCT, Commissioner for Patents, Office of PCT Legal Administration, P.O. Box 1450, Alexandria, Virginia 22313-1450, with the contents of the letter marked to the attention of the Office of PCT Legal Administration.

Bryan Tung
PCT Legal Examiner
PCT Legal Office

Boris Milef
PCT Legal Examiner
PCT Legal Office

Telephone: 571-272-3303
Facsimile: 571-273-0459

UNITED STATES PATENT AND TRADEMARK OFFICE

COMMISSIONER FOR PATENTS
UNITED STATES PATENT AND TRADEMARK OFFICE
P.O. BOX 1450
ALEXANDRIA, VA 22313-1450
www.uspto.gov

19 DEC 2006

HOLLAND & HART, LLP
P.O. BOX 8749
DENVER, CO 80201

In re Application of VON SPRECKELSEN	:	
U.S. Patent No.: 6,877,630	:	
U.S. Application No.: 10/414,558	:	
Filing Date: 09 April 2003	:	DECISION
Attorney Docket No.: 44257.0002	:	
For: RESEALABLE GAS IMPERMEABLE	:	
SEALING ASSEMBLY	:	

This is in response to patentee's "Renewed Petition to Accept an Unintentionally Delayed Claim Under 35 U.S.C. §120/365(c) (37 CFR §1.78(a)(3))" and "Renewed Request for Certificate of Correction of Applicant's Mistake (37 CFR §1.323)" filed 15 November 2006.

BACKGROUND

On 09 April 2003, patentee filed purported 35 U.S.C. 371 national stage papers in the United States Designated/Elected Office (DO/EO/US). The submission included, *inter alia*, a "Utility Patent Application Transmittal" (Form PTO/SB/05) and an application data sheet.

On 12 April 2005, the present application issued as U.S. Patent Number 6,877,630.

On 16 June 2005, patentee filed a request for a certificate of correction on grounds that the USPTO omitted certain national stage identifying information on the published patent.

On 09 August 2005, this Office mailed a decision dismissing the 16 June 2005 request. The decision stated that the papers filed 09 April 2003 did not unambiguously identify the submission as a national stage filing under 35 U.S.C. 371 and that the submission was properly accepted as a filing under 35 U.S.C. 111(a).

On 07 September 2005, patentee filed a petition under 37 CFR 1.78(a)(3) and a request for certificate of correction under 37 CFR 1.323.

On 18 October 2005, the USPTO issued a certificate of correction for U.S. Patent Number 6,877,630.

On 11 August 2006, this Office mailed a decision dismissing the 07 September 2005 petition and request.

On 15 August 2006, the USPTO issued a certificate of correction for U.S. Patent Number 6,877,630, which superseded the certificate of correction issued on 18 October 2005.

On 15 November 2006, patentee filed the present renewed petition under 37 CFR 1.78(a)(3) and renewed request for certificate of correction under 37 CFR 1.323.

DISCUSSION

MPEP 1481.03 states in relevant part:

> Where 35 U.S.C. 120 and 365(c) priority based on an international application is to be asserted or corrected in a patent via a Certificate of Correction, the following conditions must be satisfied:
>
> (A) all requirements set forth in 37 CFR 1.78(a)(1) must have been met in the application which became the patent to be corrected;
>
> (B) it must be clear from the record of the patent and the parent application(s) that priority is appropriate (see MPEP § 201.11);
>
> (C) the patentee must submit together with the request for the certificate, copies of documentation showing designation of states and any other information needed to make it clear from the record that the 35 U.S.C. 120 priority is appropriate (see MPEP § 201.13(b) as to the requirements for 35 U.S.C. 120 priority based on an international application; and
>
> (D) a grantable petition to accept an unintentionally delayed claim for the benefit of a prior application must be filed, including a surcharge as set forth in 37 CFR 1.17(t), as required by 37 CFR 1.78(a)(3).
>
> If all the above-stated conditions are satisfied, a Certificate of Correction can be used to amend the patent to make reference to a prior copending application, or to correct an incorrect reference to the prior copending application, for benefit claims under 35 U.S.C. 120 and 365(c).

A review of the record of the present patent and the parent application reveals that items (A), (B), and (C) above have been satisfied.

With regard to item (D) above, 37 CFR 1.78(a)(3) states:

> If the reference required by 35 U.S.C. 120 and paragraph (a)(2) of this section is presented after the time period provided by paragraph (a)(2)(ii) of this section, the claim under 35 U.S.C. 120, 121, or 365(c) for the benefit of a prior-filed copending nonprovisional application or international application designating the United States of America may be accepted if the reference identifying the prior-filed application by application number or international application number and international filing date was unintentionally delayed. A petition to accept an unintentionally delayed claim under 35 U.S.C. 120, 121, or 365(c) for the benefit of a prior-filed application must be accompanied by:
>
> (i) The reference required by 35 U.S.C. 120 and paragraph (a)(2) of this section to the prior-filed application, unless previously submitted;
>
> (ii) The surcharge set forth in § 1.17(t); and
>
> (iii) A statement that the entire delay between the date the claim was due under paragraph (a)(2)(ii) of this section and the date the claim was filed

> was unintentional. The Director may require additional information where there is a question whether the delay was unintentional.

With regard to item (i) above, the requisite reference has been provided by an appropriate certificate of correction.

With regard to item (ii) above, the requisite surcharge has been provided.

With regard to item (iii) above, the requisite statement has been provided.

CONCLUSION

For the reasons set forth above, the renewed petition under 37 CFR 1.78(a)(3) is GRANTED.

A corrected filing receipt, which includes the priority claim to the prior-filed international application, accompanies this decision.

Any inquiry concerning this decision may be directed to the undersigned.

This patented file is being forwarded to the Certificates of Correction Branch for processing of the request for a certificate of correction.

Bryan Tung
PCT Legal Examiner
PCT Legal Office

Boris Milef
PCT Legal Examiner
PCT Legal Office

Telephone: 571-272-3303
Facsimile: 571-273-0459

Enclosure: Corrected Filing Receipt

UNITED STATES PATENT AND TRADEMARK OFFICE

UNITED STATES DEPARTMENT OF COMMERCE
United States Patent and Trademark Office
Address: COMMISSIONER FOR PATENTS
P.O. Box 1450
Alexandria, Virginia 22313-1450
www.uspto.gov

APPL NO.	FILING OR 371 (c) DATE	ART UNIT	FIL FEE REC'D	ATTY.DOCKET NO	DRAWINGS	TOT CLMS	IND CLMS
10/414,558	04/09/2003	3727	1050	44257.0002	2	7	3

CONFIRMATION NO. 5286

CORRECTED FILING RECEIPT

OC000000021582569

26582
HOLLAND & HART, LLP
P.O BOX 8749
DENVER, CO 80201

Date Mailed: 12/13/2006

Receipt is acknowledged of this regular Patent Application. It will be considered in its order and you will be notified as to the results of the examination. Be sure to provide the U.S. APPLICATION NUMBER, FILING DATE, NAME OF APPLICANT, and TITLE OF INVENTION when inquiring about this application. Fees transmitted by check or draft are subject to collection. Please verify the accuracy of the data presented on this receipt. **If an error is noted on this Filing Receipt, please mail to the Commissioner for Patents P.O. Box 1450 Alexandria Va 22313-1450. Please provide a copy of this Filing Receipt with the changes noted thereon. If you received a "Notice to File Missing Parts" for this application, please submit any corrections to this Filing Receipt with your reply to the Notice. When the USPTO processes the reply to the Notice, the USPTO will generate another Filing Receipt incorporating the requested corrections (if appropriate).**

Applicant(s)

Henning von Spreckelsen, Woking, UNITED KINGDOM;
Peter Michael McGeough, Navan, IRELAND;

Power of Attorney:

Francis Sirr--17265
Earl Hancock--19472
Robert Kelly--33922
Brian Kinnear--43717

Domestic Priority data as claimed by applicant

This application is a CON of PCT/GB00/04211 11/02/2000

Foreign Applications

If Required, Foreign Filing License Granted: 06/17/2003

The country code and number of your priority application, to be used for filing abroad under the Paris Convention, is US10/414,558

Projected Publication Date: Not Applicable

Non-Publication Request: No

Early Publication Request: No

Title

RESEALABLE GAS IMPERMEABLE SEALING ASSEMBLY

Preliminary Class

220

PROTECTING YOUR INVENTION OUTSIDE THE UNITED STATES

Since the rights granted by a U.S. patent extend only throughout the territory of the United States and have no effect in a foreign country, an inventor who wishes patent protection in another country must apply for a patent in a specific country or in regional patent offices. Applicants may wish to consider the filing of an international application under the Patent Cooperation Treaty (PCT). An international (PCT) application generally has the same effect as a regular national patent application in each PCT-member country. The PCT process **simplifies** the filing of patent applications on the same invention in member countries, but **does not result** in a grant of "an international patent" and does not eliminate the need of applicants to file additional documents and fees in countries where patent protection is desired.

Almost every country has its own patent law, and a person desiring a patent in a particular country must make an application for patent in that country in accordance with its particular laws. Since the laws of many countries differ in various respects from the patent law of the United States, applicants are advised to seek guidance from specific foreign countries to ensure that patent rights are not lost prematurely.

Applicants also are advised that in the case of inventions made in the United States, the Director of the USPTO must issue a license before applicants can apply for a patent in a foreign country. The filing of a U.S. patent application serves as a request for a foreign filing license. The application's filing receipt contains further information and guidance as to the status of applicant's license for foreign filing.

Applicants may wish to consult the USPTO booklet, "General Information Concerning Patents" (specifically, the section entitled "Treaties and Foreign Patents") for more information on timeframes and deadlines for filing foreign patent applications. The guide is available either by contacting the USPTO Contact Center at 800-786-9199, or it can be viewed on the USPTO website at http://www.uspto.gov/web/offices/pac/doc/general/index.html.

For information on preventing theft of your intellectual property (patents, trademarks and copyrights), you may wish to consult the U.S. Government website, http://www.stopfakes.gov. Part of a Department of Commerce initiative, this website includes self-help "toolkits" giving innovators guidance on how to protect intellectual property in specific countries such as China, Korea and Mexico. For questions regarding patent enforcement issues, applicants may call the U.S. Government hotline at 1-866-999-HALT (1-866-999-4158).

LICENSE FOR FOREIGN FILING UNDER
Title 35, United States Code, Section 184
Title 37, Code of Federal Regulations, 5.11 & 5.15

GRANTED

The applicant has been granted a license under 35 U.S.C. 184, if the phrase "IF REQUIRED, FOREIGN FILING LICENSE GRANTED" followed by a date appears on this form. Such licenses are issued in all applications where the conditions for issuance of a license have been met, regardless of whether or not a license may be required as set forth in 37 CFR 5.15. The scope and limitations of this license are set forth in 37 CFR 5.15(a) unless an earlier license has been issued under 37 CFR 5.15(b). The license is subject to revocation upon written notification. The date indicated is the effective date of the license, unless an earlier license of similar scope has been granted under 37 CFR 5.13 or 5.14.

This license is to be retained by the licensee and may be used at any time on or after the effective date thereof unless it is revoked. This license is automatically transferred to any related applications(s) filed under 37 CFR 1.53(d). This license is not retroactive.

The grant of a license does not in any way lessen the responsibility of a licensee for the security of the subject matter as imposed by any Government contract or the provisions of existing laws relating to espionage and the national security or the export of technical data. Licensees should apprise themselves of current regulations especially with respect to certain countries, of other agencies, particularly the Office of Defense Trade Controls, Department of State (with respect to Arms, Munitions and Implements of War (22 CFR 121-128)); the Bureau of Industry and Security, Department of Commerce (15 CFR parts 730-774); the Office of Foreign Assets Control, Department of Treasury (31 CFR Parts 500+) and the Department of Energy.

NOT GRANTED

No license under 35 U.S.C. 184 has been granted at this time, if the phrase "IF REQUIRED, FOREIGN FILING LICENSE GRANTED" DOES NOT appear on this form. Applicant may still petition for a license under 37 CFR 5.12, if a license is desired before the expiration of 6 months from the filing date of the application. If 6 months has lapsed from the filing date of this application and the licensee has not received any indication of a secrecy order under 35 U.S.C. 181, the licensee may foreign file the application pursuant to 37 CFR 5.15(b).

UNITED STATES PATENT AND TRADEMARK OFFICE

COMMISSIONER FOR PATENTS
UNITED STATES PATENT AND TRADEMARK OFFICE
P.O. BOX 1450
ALEXANDRIA, VA 22313-1450
WWW.USPTO.GOV

Paper No. None

MEYERTONS, HOOD, KIVLIN, KOWERT & GOETZEL, P.C.
P.O. BOX 398
AUSTIN TX 78767-0398

COPY MAILED

MAR 2 1 2006

OFFICE OF PETITIONS

In re Application of
Jiin-Huey Chern Lin et al.
Application No. 10/414,582
Filing Date: April 16, 2003
Attorney Docket No. 5937-00203
Title: CALCIUM PHOSPHATE CEMENT, USE AND PREPARATION THEREOF

DECISION ON PETITION

This is a decision on the petition under 37 CFR 1.78(a)(3), filed May 16, 2005, to accept an unintentionally delayed claim under 35 U.S.C. § 120 for the benefit of priority to the prior-filed nonprovisional applications set forth in the amendment filed concurrently with the instant petition.

The petition is **DISMISSED**.

A petition for acceptance of a claim for late priority under 37 CFR 1.78(a)(3) is only applicable to those applications filed on or after November 29, 2000. Further, the petition is appropriate only after the expiration of the period specified in 37 CFR 1.78(a)(2)(ii). In addition, the petition under 37 CFR 1.78(a)(3) must be accompanied by:

(1) the reference required by 35 U.S.C. § 120 and 37 CFR §1.78(a)(2)(i) of the prior-filed application, unless previously submitted;
(2) the surcharge set forth in § 1.17(t); and
(3) a statement that the entire delay between the date the claim was due under 37 CFR 1.78(a)(2)(ii) and the date the claim was filed was unintentional. The Commissioner may require additional information where there is a question whether the delay was unintentional.

The present petition does not comply with item (1).

37 CFR 1.78(a)(2)(i) requires that any nonprovisional application claiming the benefit of one or more prior-filed copending nonprovisional or international applications must

contain or be amended to contain a reference to each such prior-filed application, identifying it by application number (consisting of the series code and serial number) and indicating the relationship of the applications. The relationship between the applications is whether the subject application is a continuation, divisional, or continuation-in-part of a prior-filed nonprovisional application. An example of a proper benefit claim is: "This application is a continuation of Application No. 10/---, filed---." A benefit claim that merely states: "This application claims the benefit of Application No. 10/---, filed---," does not comply with 37 CFR 1.78(a)(2)(i) since the proper relationship, which includes the type of continuing application, is not stated. Also, the status of each nonprovisional parent application (if it is patented or abandoned) should also be indicated, following the filing date of the parent nonprovisional application. See MPEP Section 201.11, Rev. 2, May 2004, Reference to Prior Application. The amendment filed May 16, 2005 fails to comply with the provisions of 37 CFR 1.78(a)(2)(i) and is therefore unacceptable.

The renewed petition should indicate in a prominent manner that the attorney handling this matter is Paul Shanoski, and may be submitted by mail[1], hand-delivery[2], or facsimile[3].

The issue fee was paid on July 18, 2005. Therefore, it is conceivable that the application will issue before either the filing or the granting of a renewed petition under 37 C.F.R. §1.78(a)(3). In such case, submission of a certificate of correction (along with the $100 fee) will be required as a condition for granting the petition under 37 C.F.R. §1.78(a)(3).

The general phone number for the Office of Petitions which should be used for status requests is (571) 272-3282. Telephone inquiries regarding this decision should be directed to Senior Attorney Paul Shanoski at (571) 272-3225.

Frances Hicks
Petitions Examiner
Office of Petitions
United States Patent and Trademark Office

1 Mail Stop Petition, Commissioner for Patents, United States Patent and Trademark Office, P.O. Box 1450, Alexandria, VA, 22313-1450.
2 Customer Window, Randolph Building, 401 Dulaney Street, Alexandria, VA, 22314.
3 (703) 872-9306 - please note this is a central facsimile number. On July 15, 2005, the Central FAX Number changed to 571-273-8300. To give customers time to adjust to the new Central FAX Number, faxes sent to the old number (703-872-9306) will be routed to the new number until September 15, 2005.

UNITED STATES PATENT AND TRADEMARK OFFICE

COMMISSIONER FOR PATENTS
UNITED STATES PATENT AND TRADEMARK OFFICE
P.O. BOX 1450
ALEXANDRIA, VA 22313-1450
WWW.USPTO.GOV

Paper No. None

MEYERTONS, HOOD, KIVLIN, KOWERT & GOETZEL, P.C.
700 LAVACA, SUITE 800
AUSTIN TX 78701

COPY MAILED

MAR 14 2007

OFFICE OF PETITIONS

In re Application of	:	
Jiin-Huey Chern Lin et al.	:	
Application No. 10/414,582	:	DECISION ON RENEWED PETITION
Patent No. 7,094,282	:	UNDER 37 C.F.R. §1.78(A)(3)
Filing Date: April 16, 2003	:	
Issue Date: August 22, 2006	:	
Attorney Docket No. 5937-00203	:	
Title: CALCIUM PHOSPHATE	:	
CEMENT, USE AND PREPARATION	:	
THEREOF	:	

This is a decision on the renewed petition under 37 C.F.R. § 1.78(a)(3), filed May 19, 2006, to accept an unintentionally delayed claim under 35 U.S.C. § 120 for the benefit of priority to the prior-filed nonprovisional application set forth in the amendment filed concurrently with the present petition.

The Office regrets the period of delay in issuing this decision.

The renewed petition is **DISMISSED**.

The original petition was filed on May 16, 2005 and was dismissed via the mailing of a decision on March 21, 2006.

A petition for acceptance of a claim for late priority under 37 C.F.R. 1.78(a)(3) is only applicable to those applications filed on or after November 29, 2000. Further, the petition is appropriate only after the expiration of the period specified in

37 C.F.R. 1.78(a)(2)(ii). In addition, the petition under 37 C.F.R. 1.78(a)(3) must be accompanied by:

(1) the reference required by 35 U.S.C. § 120 and 37 C.F.R. 1.78(a)(2)(i) of the prior-filed application, unless previously submitted;
(2) the surcharge set forth in § 1.17(t); and
(3) a statement that the entire delay between the date the claim was due under 37 C.F.R. 1.78(a)(2)(ii) and the date the claim was filed was unintentional. The Director may require additional information where there is a question whether the delay was unintentional.

With this renewed petition, Petitioner has met the second and third requirements of Rule §1.78(a)(3).

Regarding the first requirement, the amendment to the specification as drafted is unacceptable and, therefore, is not considered a proper reference under 37 C.F.R. 1.78(a)(3). The benefit claim asserts that the present application is a continuation-in-part (CIP) of both 09/615,384 and 10/328,019, and further states that 10/328,019 is a CIP of 09/615,384. Put another way, Petitioner has set forth that the present application is a CIP of two parental applications, one of which is a CIP of the other. This is improper.

Furthermore, the issue fee was submitted on July 19, 2005, and three months after the filing of this renewed petition, the present application matured into U.S. Patent No. 7,094,282. M.P.E.P. §201(III)(F)(B) sets forth, in pertinent part:

> In addition to the petition under 37 C.F.R. 1.78 and the amendment or ADS, to add a benefit claim it may be necessary for applicant to file one of the following, depending on the status of the application...a request for a certificate of correction under 37 C.F.R. 1.323, if appropriate (see MPEP §§ 1402 and 1481), if the application has issued as a patent.

Since the present application has issued as a patent since the filing of this renewed petition, <u>a certificate of correction will be required</u>, pursuant to the portion of the M.P.E.P. cited immediately above, (<u>along with the $100 fee</u>) as a condition for granting the petition under 37 C.F.R. §1.78(a)(3).

Any response to this decision reply should include a cover letter entitled "Second Renewed Petition Under 37 C.F.R. §§1.78(a)(3)". This is not a final agency action within the meaning of 5 U.S.C 704.

Petitioner will note that an ADS filed with the application is not required to be signed unless the ADS includes a nonpublication request. 37 C.F.R. §1.33(b) requires that amendments and other papers, except for written assertions pursuant to 37 C.F.R. §1.27(c)(2)(ii), filed in the application must be signed by an appropriate party. Therefore, an ADS or a supplemental ADS filed after the filing of an application must be signed in accordance with 37 C.F.R. §1.33(b).

The response should indicate in a prominent manner that the attorney handling this matter is Paul Shanoski, and may be submitted by mail[1], hand-delivery[2], or facsimile[3].

Telephone inquiries regarding *this decision* should be directed to Paul Shanoski at (571) 272-3225[4].

Nancy Johnson for

Ira Lazarus
Supervisory Petitions Examiner
Office of Petitions
United States Patent and Trademark Office

---

1 Mail Stop Petition, Commissioner for Patents, United States Patent and Trademark Office, P.O. Box 1450, Alexandria, VA, 22313-1450.
2 Customer Window, Randolph Building, 401 Dulaney Street, Alexandria, VA, 22314.
3 (571) 273-8300- please note this is a central facsimile number.
4 Petitioner will note that all practice before the Office should be in writing, and the action of the Office will be based exclusively on the written record in the Office. See 37 C.F.R. §1.2. As such, Petitioner is reminded that no telephone discussion may be controlling or considered authority for any further action(s) of Petitioner.

fUNITED STATES PATENT AND TRADEMARK OFFICE

COMMISSIONER FOR PATENTS
UNITED STATES PATENT AND TRADEMARK OFFICE
P.O. BOX 1450
ALEXANDRIA, V A 22313-1450
WWW.USPTO.GOV

Paper No. None

MEYERTONS, HOOD, KIVLIN, KOWERT & GOETZEL, P.C.
700 LAVACA, SUITE 800
AUSTIN TX 78701

COPY MAILED

SEP 0 4 2007

OFFICE OF PETITIONS

In re Application of	:	
Jiin-Huey Chern Lin et al.	:	
Application No. 10/414,582	:	DECISION ON SECOND RENEWED
Patent No. 7,094,282	:	PETITION UNDER 37 C.F.R.
Filing Date: April 16, 2003	:	§1.78(A)(3)
Issue Date: August 22, 2006	:	
Attorney Docket No. 5937-00203	:	
Title: CALCIUM PHOSPHATE	:	
CEMENT, USE AND PREPARATION	:	
THEREOF	:	

This is a decision on the second renewed petition under 37 C.F.R. § 1.78(a)(3), filed April 2, 2007, to accept an unintentionally delayed claim under 35 U.S.C. § 120 for the benefit of priority to the prior-filed nonprovisional application set forth in the reference which is contained within the text of this second renewed petition.

An original petition was filed on May 16, 2005 and was dismissed via the mailing of a decision on March 21, 2006.

A renewed petition was filed on May 19, 2006 and was dismissed via the mailing of a decision on March 14, 2007.

This second renewed petition is **DISMISSED**.

A petition for acceptance of a claim for late priority under 37 C.F.R. 1.78(a)(3) is only applicable to those applications filed on or after November 29, 2000. Further, the petition is

appropriate only after the expiration of the period specified in 37 C.F.R. 1.78(a)(2)(ii). In addition, the petition under 37 C.F.R. 1.78(a)(3) must be accompanied by:

(1) the reference required by 35 U.S.C. § 120 and 37 C.F.R. 1.78(a)(2)(i) of the prior-filed application, unless previously submitted;
(2) the surcharge set forth in § 1.17(t); and
(3) a statement that the entire delay between the date the claim was due under 37 C.F.R. 1.78(a)(2)(ii) and the date the claim was filed was unintentional. The Director may require additional information where there is a question whether the delay was unintentional.

With this second renewed petition, Petitioner has met the second and third requirements of Rule § 1.78(a)(3).

Regarding the first requirement, the present amendment to the specification cannot be entered. Petitioner has submitted the **required reference within the text of his petition**. It does not appear that Petitioner has supplied either an amendment or a supplemental Application Data Sheet (ADS), and as such, Petitioner has not complied with Rule § 1.78(a)(3)(i), which refers to Rule § 1.78(a)(2)(iii).

Assuming arguendo that the reference had been provided via the submission of either an amendment or a supplemental ADS, the submission would not be acceptable, as **the reference as drafted is unacceptable** and, therefore, is not considered a proper reference under 37 C.F.R. 1.78(a)(3).

The reference to add the above-noted, prior-filed applications on page one following the first sentence of the specification is not acceptable as drafted since it improperly incorporates by reference the prior-filed applications. An incorporation by reference statement added after an application's filing date is not effective because no new matter can be added to an application after its filing date. See 35 U.S.C. § 132(a).

It is noted that the specification that was presented on filing incorporated application number 09/615,384 by reference, but not application numbers 11/137,112, 10/944,278 or 10/328,019.

If an incorporation by reference statement is included in an amendment to the specification to add a benefit claim under 35 U.S.C. § 120 after the filing date of the application, the amendment would not be proper. When a benefit claim under 35

U.S.C. § 120 is submitted after the filing of an application, the reference to the prior application cannot include an incorporation by reference statement of the prior application. See Dart Industries v. Banner, 636 F.2d 684, 207 USPQ 273 (C.A.D.C. 1980). Note MPEP §§ 201.06(c) and 608.04(b).

Before the petition under 37 C.F.R. § 1.78(a)(3) can be granted, a renewed petition and either an Application Data Sheet or an amendment (complying with the provisions of 37 C.F.R. 1.121 and 37 C.F.R. 1.76(b)(5)) to correct the above matters are required.

Finally, both the decision on the original petition and the decision on the renewed petition discussed the need for a **certificate of correction.** The decision on the renewed petition set forth:

> Furthermore, the issue fee was submitted on July 19, 2005, and three months after the filing of this renewed petition, the present application matured into U.S. Patent No. 7,094,282. M.P.E.P. §201(III)(F)(B) sets forth, in pertinent part:
>
> > In addition to the petition under 37 C.F.R. 1.78 and the amendment or ADS, to add a benefit claim it may be necessary for applicant to file one of the following, depending on the status of the application…a request for a certificate of correction under 37 C.F.R. 1.323, if appropriate (see MPEP §§ 1402 and 1481), if the application has issued as a patent.
>
> Since the present application has issued as a patent since the filing of this renewed petition, a certificate of correction will be required, pursuant to the portion of the M.P.E.P. cited immediately above, (along with the $100 fee) as a condition for granting the petition under 37 C.F.R. §1.78(a)(3).

With this second renewed petition, it does not appear that either a certificate of correction, or the associated fee, has been provided.

Any response to this decision should include a cover letter entitled "Third Renewed Petition Under 37 C.F.R. § 1.78(a)(3)". This is not a final agency action within the meaning of 5 U.S.C § 704.

Petitioner will note that an ADS filed with the application is not required to be signed unless the ADS includes a nonpublication request. 37 C.F.R. §1.33(b) requires that amendments and other papers, except for written assertions pursuant to 37 C.F.R. §1.27(c)(2)(ii), filed in the application must be signed by an appropriate party. Therefore, an ADS or a

supplemental ADS filed after the filing of an application must be signed in accordance with 37 C.F.R. §1.33(b).

The third renewed petition should indicate in a prominent manner that the attorney handling this matter is Paul Shanoski, and may be submitted by mail[1], hand-delivery[2], or facsimile[3]. Registered users of EFS-Web may alternatively submit a response to this decision via EFS-Web[4].

If responding by mail, Petitioner is advised not to place the undersigned's name on the envelope. Only the information that appears in the footnote should be included - adding anything else to the address will delay the delivery of the response to the undersigned.

Telephone inquiries regarding *this decision* should be directed to Paul Shanoski at (571) 272-3225[5].

Nancy Johnson
Senior Attorney
Office of Petitions
United States Patent and Trademark Office

---

1 Mail Stop Petition, Commissioner for Patents, United States Patent and Trademark Office, P.O. Box 1450, Alexandria, VA, 22313-1450.
2 Customer Window, Randolph Building, 401 Dulaney Street, Alexandria, VA, 22314.
3 (571) 273-8300- please note this is a central facsimile number.
4 https://sportal.uspto.gov/authenticate/authenticateuserlocalepf.html
5 Petitioner will note that all practice before the Office should be in writing, and the action of the Office will be based exclusively on the written record in the Office. See 37 C.F.R. §1.2. As such, Petitioner is reminded that no telephone discussion may be controlling or considered authority for any further action(s) of Petitioner.

UNITED STATES PATENT AND TRADEMARK OFFICE

Commissioner for Patents
United States Patent and Trademark Office
P.O. Box 1450
Alexandria, VA 22313-1450
www.uspto.gov

BLAKELY, SOKOLOFF, TAYLOR & ZAFMAN LLP
12400 Wilshire Boulevard
Seventh Floor
Los Angeles, CA 90025-1026

COPY MAILED

NOV 15 2006

OFFICE OF PETITIONS

In re Application of	:	
DUAN, et al.	:	
Application No. 10/414,596	:	DECISION ON PETITION
Filed: April 15, 2003	:	TO WITHDRAW
Attorney Docket No. OIC0273US	:	FROM RECORD
	:	

This is a decision on the Request to Withdraw as attorney or agent of record under 37 C.F.R. § 1.36(b), filed August 04, 2006.

The request is **NOT APPROVED** as moot.

A review of the file record indicates that the power of attorney to BLAKELY, SOKOLOFF, TAYLOR & ZAFMAN LLP has been revoked by the assignee of the patent application on September 05, 2006. Accordingly, the request to withdraw under 37 C.F.R. § 1.36(b) is moot.

All future communications from the Office will continue to be directed to the below-listed address until otherwise notified by applicant.

Telephone inquires concerning this decision should be directed to Patricia Volpe at (571) 272-6825.

Patricia Volpe
Petitions Examiner
Office of Petitions

cc: **CSA LLP**
4807 Spicewood Springs Road
Bldg. 4, Suite 201
Austin, TX 78759

UNITED STATES PATENT AND TRADEMARK OFFICE

UNITED STATES DEPARTMENT OF COMMERCE
United States Patent and Trademark Office
Address: COMMISSIONER FOR PATENTS
P.O. Box 1450
Alexandria, Virginia 22313-1450
www.uspto.gov

APPLICATION NUMBER	FILING OR 371 (c) DATE	FIRST NAMED APPLICANT	ATTY. DOCKET NO./TITLE
10/414,596	04/15/2003	Jinfan Duan	5306P097

CONFIRMATION NO. 6929

OC000000021226731

08791
BLAKELY SOKOLOFF TAYLOR & ZAFMAN
12400 WILSHIRE BOULEVARD
SEVENTH FLOOR
LOS ANGELES, CA 90025-1030

Date Mailed: 11/14/2006

NOTICE REGARDING CHANGE OF POWER OF ATTORNEY

This is in response to the Power of Attorney filed 09/05/2006.

- The Power of Attorney to you in this application has been revoked by the assignee who has intervened as provided by 37 CFR 3.71. Future correspondence will be mailed to the new address of record(37 CFR 1.33).

PATRICIA A VOLPE
OP (571) 272-6825

FORMER ATTORNEY/AGENT COPY

UNITED STATES PATENT AND TRADEMARK OFFICE

Commissioner for Patents
United States Patent and Trademark Office
P.O. Box 1450
Alexandria, VA 22313-1450
www.uspto.gov

JOHN S. PRATT
KILPATRICK STOCKTON LLP
1100 PEACHTREE STREET
ATLANTA, GA 30309-4530

COPY MAILED

MAR 2 4 2005

OFFICE OF PETITIONS

In re Application of :
Alvin Costa et al :
Application No. 10/414,598 :
Filed: April 16, 2003 :
Attorney Docket No. 14077/283617

ON PETITION

This is a decision on the petition, filed March 18, 2005, under 37 CFR 1.313(c)(2) to withdraw the above-identified application from issue after payment of the issue fee.

The petition is **GRANTED**.

The above-identified application is withdrawn from issue for consideration of a submission under 37 CFR 1.114 (request for continued examination). See 37 CFR 1.313(c)(2).

Petitioner is advised that the issue fee paid on February 4, 2005 in the above-identified application cannot be refunded. If, however, the above-identified application is again allowed, petitioner may request that it be applied towards the issue fee required by the new Notice of Allowance.[1]

Telephone inquiries should be directed to Irvin Dingle at (571) 272-3210.

This matter will be forwarded to Technology Center AU 1724 for processing of the request for continued examination under 37 CFR 1.114 and for consideration of the concurrently filed Information Disclosure Statement.

Irvin Dingle
Petitions Examiner
Office of Petitions
Office of the Deputy Commissioner
for Patent Examination Policy

---

[1] The request to apply the issue fee to the new Notice may be satisfied by completing and returning the new Issue Fee Transmittal Form PTOL-85(b), which includes the following language thereon: Commissioner for Patents is requested to apply the Issue Fee and Publication Fee (if any) or re-apply any previously paid issue fee to the application identified above. Petitioner is advised that, whether a fee is indicated as being due or not, the Issue Fee Transmittal Form **must** be completed and timely submitted to avoid abandonment. Note the language in bold text on the first page of the Notice of Allowance and Fee(s) Due (PTOL-85).

UNITED STATES PATENT AND TRADEMARK OFFICE

Commissioner for Patents
United States Patent and Trademark Office
P.O. Box 1450
Alexandria, VA 22313-1450
www.uspto.gov

LSI CORPORATION
1621 BARBER LANE
MS: D-106
MILPITAS, CA 95035

COPY MAILED

AUG 29 2007

OFFICE OF PETITIONS

In re Application of Cui et al. :
Application No. 10/414,601 :
Filing Date: April 15, 2003 :
Attorney Docket No. 02-6029/LS11P217 :

Decision on Petition

This is a decision on the petition under 37 CFR 1.137(b), filed April 12, 2007, to revive the above-identified application.

The petition is **granted**.

The above-identified application became abandoned for failure to submit the issue fee in a timely manner in reply to the Notice of Allowance mailed September 20, 2006, which set a statutory period for reply of three (3) months. Accordingly, the above-identified application became abandoned on December 21, 2006. A Notice of Abandonment was mailed on January 17, 2007.

The instant petition requests revival of the application.

Petitioner has submitted the required petition fee of $1,500. Petitioner has submitted a reply to the Notice of Allowance in the form of the issue fee and a completed issue fee transmittal form. Petitioner has stated the entire delay in filing the required reply from the due date for the reply until the filing of a grantable petition pursuant to 37 CFR 1.137(b) was unintentional.

Petitioner has met the requirements to revive the above-identified application pursuant to 37 CFR 1.137(b). Therefore, the petition is granted and the application is revived.

The Office of Patent Publications will be informed of the instant decision and the application will be issued as a patent in due course.

Telephone inquiries regarding this communication should be directed to Petitions Attorney Steven Brantley at (571) 272-3203.

Charles Steven Brantley
Senior Petitions Attorney
Office of Petitions

UNITED STATES PATENT AND TRADEMARK OFFICE

Commissioner for Patents
United States Patent and Trademark Office
P.O. Box 1450
Alexandria, VA 22313-1450
www.uspto.gov
DIW 08-04

REED SMITH, LLP
ATTN: PATENT RECORDS DEPARTMENT
599 LEXINGTON AVENUE, 29TH FLOOR
NEW YORK NY 10022-7650

COPY MAILED

AUG 3 1 2004

OFFICE OF PETITIONS

In re Application of	:	
Bernhard Duelli	:	
Application No. 10/414,613	:	DECISION
Filed: 16 April, 2003	:	UNDER 37 CFR 1.28(c)
Attorney's Docket No. GK-HEF-960 / 500639.20027	:	

This is in response to the deficiency fee payment filed pursuant to 37 CFR 1.28(c) on 16 August, 2004.

37 CFR 1.28(c) states, "The deficiency is based on the amount of the fee, for other than a small entity, in effect at the time the deficiency is paid in full."

The Office no longer investigates or rejects original or reissue applications under 37 CFR 1.56. **1098 Off. Gaz. Pat. Office 502 (January 3, 1989)**. Therefore, nothing in this Notice is intended to imply that an investigation was done.

Your fee deficiency submission under 37 CFR 1.28 is hereby **ACCEPTED**.

Small entity status will no longer apply.

The file is being forwarded to Technology Center 3700 for examination in due course.

Telephone inquiries should be directed to the undersigned at (703)308-6918.

D Wood

Douglas I. Wood
Senior Petitions Attorney
Office of Petitions

UNITED STATES PATENT AND TRADEMARK OFFICE

Commissioner for Patents
United States Patent and Trademark Office
P.O. Box 1450
Alexandria, VA 22313-1450
www.uspto.gov

WOODCOCK WASHBURN LLP
CIRA CENTRE, 12TH FLOOR
2929 ARCH STREET
PHILADELPHIA PA 19104-2891

COPY MAILED

FEB 19 2008

OFFICE OF PETITIONS

In re Patent of Cao, et al.
Patent No. 7,217,562
Issued: May 15, 2007
Application No. 10/414,620
Filed: April 16, 2003
Attorney Docket No. PUBN-0002

ON PETITION

This is a decision on the petition under 37 CFR 1.59 filed May 11, 2007, requesting the Office expunge a portion of the application file.

The petition is **granted**.

Petitioner requests the removal of information submitted via facsimile on March 29, 2006 to Examiner Bradley Sisson for purposes of discussion. The documents are entitled, "Specification", "Claims", "Applicant Arguments/Remards Made in an Amendment", and "Amendment After Final or under 37 CFR 1.312, initialed by the examiner" .

Petitioner has established to the satisfaction of the Office that removal of the above-identified documents is appropriate.

They have been closed/expunged from the application file.

After the mailing of this decision, the application file will be returned to Files Repository.

Telephone inquiries pertaining to this matter may be directed to the undersigned at (571) 272-3230.

Shirene Willis Brantley
Senior Petitions Attorney
Office of Petitions

SPE RESPONSE FOR CERTIFICATE OF CORRECTION

Paper No.: _____

DATE : December 1, 2006

TO SPE OF : ART UNIT 2859

SUBJECT : Request for Certificate of Correction for Appl. No.: 10/414625 patent No.: 6,836,117

Please complete the response (see below) and forward the completed response to scanning using document code **COCX**.

Magdalene Talley

Certificates of Correction Branch

703-308-9390 ext. 116

Thank You For Your Assistance

The request for issuing the above-identified correction(s) is hereby:

Note your decision on the appropriate box.

- [X] **Approved** — All changes apply.
- [ ] **Approved in Part** — Specify below which changes **do not** apply.
- [ ] **Denied** — State the reasons for denial below.

Comments: _____

Diego Gutierrez
Supervisory Patent Examiner
Technology Center 2800

SPE

2859

Art Unit

UNITED STATES PATENT AND TRADEMARK OFFICE

Commissioner for Patents
United States Patent and Trademark Office
P. O. Box 1450
Alexandria, VA 22313-1450
www.uspto.gov

Paper No. 4

O'Melveny & Myers, LLP
400 South Hope Street
Los Angeles, CA 90071-2899

COPY MAILED

JUL 1 8 2003

OFFICE OF PETITIONS

In re Application of	:	
Gary S. Shuster	:	
Application No. 10/414,634	:	DECISION DISMISSING
Filed: April 16, 2003	:	PETITION
Attorney Docket No. 409475-55	:	

BEST AVAILABLE COPY

This is a decision on the petition filed June 4, 2003, requesting that the above-identified application be accorded a filing date of April 15, 2003, rather than the presently accorded date of April 16, 2003.

The petition is **DISMISSED**.

Any request for reconsideration of this decision should be filed within **TWO MONTHS** of the date of this decision in order to be considered timely (see 37 CFR 1.181(f)). No extensions of time pursuant to the provisions of 37 CFR 1.136 are permitted. If reconsideration is not requested within the time period specified above, this application will be forwarded to Technology Center 1700 for examination in due course with the presently accorded filing date of November 29, 2001.

Petitioner requests the earlier filing date on the basis that the application was purportedly deposited in Express Mail service on April 15, 2003, pursuant to the requirements of 37 CFR 1.10. In support, petitioner provides a copy of the Express Mail label receipt number EL744398130US. The petition also includes a copy of a log page showing that the package in question was to be deposited on April 15, 2003.

Paragraph (d) of 37 CFR 1.10 states that:

> "Any person filing correspondence under this section that was received by the Office and delivered by the "Express Mail Post Office to Addressee" service of the USP, who can show that the "date-in" on the "Express Mail" mailing label or other official notation entered by the USPS was incorrectly entered or omitted by the USPS, may petition the Commissioner to accord the correspondence a filing date as of the date the correspondence is shown to have been deposited with the USPS, provided that:

(1) The petition is filed promptly after the person becomes aware that the Office has accorded, or will accord, a filing date based upon an incorrect entry by the USPS;

(2) The number of the "Express Mail" mailing label was placed on the paper(s) or fee(s) that constitute the correspondence prior to the original mailing by "Express Mail;" and

(3) The petition includes a showing which establishes, to the satisfaction of the Commissioner, that the requested filing date was the date the correspondence was deposited in the "Express Mail Post Office to Addressee" service prior to the last scheduled pickup for that day. Any showing pursuant to this paragraph must be corroborated by evidence from the USPS or that came into being after deposit within one business day of the deposit of the correspondence in the "Express Mail Post Office to Addressee" service of the USPS.

The instant petition lacks the showing required in item (3).

Petitioner has failed to provide any corroborative evidence from the USPS or that came into being after deposit within one business day of the deposit of the correspondence in the "Express Mail Post Office to Addressee" service of the USPS. Once the Express Mail package was deposited with the USPS, the person making the deposit should have then entered the date and time the package was deposited in the mail log. Although, petitioner may have intended for the package to be deposited on April 15, 2003, as evidenced by the mail log attached to the instant petition, the package was not, in fact, deposited until April 16, 2003. Furthermore, the mail log provided **does not** prove that the package was deposited with the USPS on April 15, 2003 in that it does not show the application number, attorney docket number or other such file identification number, the place, date and time of deposit, the place of deposit, the date and time of entry in the log. See MPEP 513. Moreover, a review of the USPS Express Mail Information Database provides that Express Mail Number EL744398130US was accepted by the USPS on April 16, 2003 at 12:10 AM. Through petitioner's own admission, the Express Mail package was received by a USPS worker at 12:10 AM. The fact that the courier arrived at the USPS in sufficient time is irrelevant to when the package was actually deposited in the USPS.

Further correspondence with respect to this matter should be addressed as follows:

By Mail: Mail Stop PETITION
Commissioner for Patents
Post Office Box 1450
Alexandria, VA 22313-1450

By facsimile: (703) 308-6916
Attn: Office of Petitions

By hand: Office of Petitions
2201 South Clark Place
Crystal Plaza 4, Suite 3C23
Arlington, VA 22202

Telephone inquiries concerning this matter may be directed to Marianne Morgan at (703) 306-3475.

Brian Hearn

Brian Hearn
Senior Petitions Examiner
Office of Petitions
Office of the Deputy Commissioner
For Patent Examination Policy

UNITED STATES PATENT AND TRADEMARK OFFICE

COMMISSIONER FOR PATENTS
UNITED STATES PATENT AND TRADEMARK OFFICE
P.O. BOX 1450
ALEXANDRIA, VA 22313-1450
www.uspto.gov

ALSTON & BIRD LLP
PIONEER HI-BRED INTERNATIONAL, INC.
BANK OF AMERICA PLAZA
101 SOUTH TRYON STREET, SUITE 4000
CHARLOTTE NC 28280-4000

MAILED

FEB 17 2010

OFFICE OF PETITIONS

In re Application of	:	
Abad et al.	:	
Application No. 10/414,637	:	LETTER REGARDING
Filed: April 16, 2003	:	PATENT TERM ADJUSTMENT
Attorney Docket No. 035718/259007	:	

This is in response to the LETTER OF GOOD FAITH AND CANDOR REGARDING PATENT TERM ADJUSTMENT filed April 10, 2009. Pursuant to applicants' duty of good faith and candor to the Office, applicants request that the determination of patent term adjustment under 35 U.S.C. 154(b) be reviewed for accuracy.

The request for review of the patent term adjustment is **GRANTED**.

The Office has updated the PALM and PAIR screen to reflect that the Patent Term Adjustment (PTA) determination at the time of the mailing of the notice of allowance is **five hundred ninety-one (591) days**. A copy of the updated PAIR screen is enclosed.

On March 6, 2009, the Office mailed the Determination of Patent Term Adjustment under 35 U.S.C. 154(b) in the above-identified application. The Notice stated that the patent term adjustment is 735 days. On April 10, 2009, applicants submitted the instant comment. Applicants disclose the following:

> In our review of the calculated patent term adjustment provided on the Patent Application Information Retrieval (PAIR) system for the above-referenced patent application, we note that there is a potential error in

> the calculated adjustments due to USPTO (PTO) delay. In accordance with 37 § C.F.R. 1.703(b)(4), the patent term was extended by 602 days for the entire length of a successful appeal process, beginning with the filing of a Notice of Appeal on August 11, 2006 and ending on April 3, 2008, the date the decision on the appeal was rendered. Within this 602-day term, the PAIR calculation also granted an additional 144 days for a delay by the Examiner in responding to Applicant's amendment filed July 27, 2006 beyond the required four months for reply, in accordance with 37 C.F.R. § 1.703(a). Applicants note the two periods of USPTO delay (the 144-day delay and 602-day delay) are overlapping. Given the provision of 37 C.F.R. § 1.703(f) that adjustments due to USPTO delay will be the sum of the periods of delay to the extent these periods are not overlapping, Applicants request review of this 144-day period of USPTO delay to determine if the calculated patent term adjustment provided on the PAIR system is correct.

Letter, 04/10/09, p. 1.

Applicants' assertion is well taken. A review of the record reveals that applicants are correct that the two periods of Office delay overlap. Accordingly, the adjustment of 144 days of patent term was entered in error. As applicants are not entitled to the period of adjustment of 144 days, it will be removed.

In view thereof, the correct patent term adjustment at the time of mailing of the notice of allowance is **591 days** (791 days of Office delay less 200 days of applicant delay).

As this letter was submitted to advise the Office of an error in applicants' favor, the Office will not assess the $200.00 fee under 37 CFR 1.18(e). The Office thanks applicants for their good faith and candor in bringing this to the attention of the Office.

Applicants are reminded that any delays by the Office pursuant to 37 CFR 1.702(a)(4) and 1.702(b) and any applicant delays under 37 CFR 1.704(c)(10) will be calculated at the time of the issuance of the patent and applicants will be notified in the

Issue Notification letter that is mailed to applicants approximately three weeks prior to issuance.

The Office of Data Management has been advised of this decision. This matter is being referred to the Office of Data Management for issuance of the patent.

Telephone inquiries specific to this decision should be directed to the undersigned at (571) 272-3211.

Christina Tartera Donnell

Christina Tartera Donnell
Senior Petitions Attorney
Office of Petitions

Enclosure: Copy of REVISED PALM screen

PALM INTRANET

Day : Tuesday
Date: 2/9/2010
Time: 18:13:29

PTA Calculations for Application: 10/414637			
Application Filing Date:	04/16/2003	PTO Delay (PTO):	935
Issue Date of Patent:		Three Years:	0
Pre-Issue Petitions:	0	Applicant Delay (APPL):	200
Post-Issue Petitions:	0	Total PTA (days):	591
PTO Delay Adjustment:	-144		

File Contents History

Number	Date	Contents Description	PTO	APPL	START
95	02/09/2010	ADJUSTMENT OF PTA CALCULATION BY PTO		144	
87	03/06/2009	MAIL NOTICE OF ALLOWANCE			
86	03/04/2009	ISSUE REVISION COMPLETED			
85	03/04/2009	DOCUMENT VERIFICATION			
84	03/04/2009	NOTICE OF ALLOWANCE DATA VERIFICATION COMPLETED			
83	03/04/2009	NOTICE OF ALLOWABILITY			
79	02/24/2009	DATE FORWARDED TO EXAMINER			
78	02/19/2009	AMENDMENT AFTER FINAL REJECTION		26	72
77	02/19/2009	REQUEST FOR EXTENSION OF TIME - GRANTED			
76	01/29/2009	MAIL ADVISORY ACTION (PTOL - 303)			
75	01/28/2009	ADVISORY ACTION (PTOL-303)			
74	01/24/2009	DATE FORWARDED TO EXAMINER			
73	01/21/2009	AMENDMENT AFTER FINAL REJECTION			
72	10/24/2008	MAIL FINAL REJECTION (PTOL - 326)			
71	10/23/2008	FINAL REJECTION			
70	08/19/2008	DATE FORWARDED TO EXAMINER			
69	07/11/2008	RESPONSE AFTER NON-FINAL ACTION			
68	04/17/2008	MAIL NON-FINAL REJECTION			
67	04/14/2008	REQUIREMENT UNDER RULE 105 INCLUDED WITH OFFICE ACTION			
66	04/14/2008	NON-FINAL REJECTION			
65	04/07/2008	MAIL BOA MISCELLANEOUS COMMUNICATION TO APPLICANT			
64	04/04/2008	BOA MISCELLANEOUS COMMUNICATION TO APPLICANT			
63	04/03/2008	MAIL BPAI DECISION ON APPEAL - REVERSED	602		41

62	04/03/2008	BPAI DECISION - EXAMINER REVERSED			
61	02/07/2008	CONFIRMATION OF HEARING BY APPELLANT			
60	02/06/2008	NOTIFICATION OF APPEAL HEARING			
59	09/14/2007	DOCKETING NOTICE MAILED TO APPELLANT			
58	09/14/2007	ASSIGNMENT OF APPEAL NUMBER			
57	09/04/2007	APPEAL AWAITING BPAI DOCKETING			
56	08/15/2007	MAIL REPLY BRIEF NOTED BY EXAMINER			
55	08/14/2007	REPLY BRIEF NOTED BY EXAMINER			
54	06/05/2007	REQUEST FOR ORAL HEARING			
53	07/09/2007	DATE FORWARDED TO EXAMINER			
52	06/05/2007	REPLY BRIEF FILED			
51	06/02/2007	EXAM. ANS. REVIEW COMPLETE			
50	04/20/2007	MAIL EXAMINER'S ANSWER	144		39
49	03/03/2007	EXAMINER'S ANSWER TO APPEAL BRIEF			
48	12/27/2006	APPEAL BRIEF REVIEW COMPLETE			
47	12/27/2006	DATE FORWARDED TO EXAMINER			
46	11/17/2006	APPEAL BRIEF FILED			
45	10/24/2006	NOTICE -- DEFECTIVE APPEAL BRIEF			
44	10/23/2006	APPEAL BRIEF REVIEW COMPLETE			
43	10/23/2006	DATE FORWARDED TO EXAMINER			
42.1	10/10/2006	DEFECTIVE / INCOMPLETE APPEAL BRIEF FILED			
42	10/10/2006	APPEAL BRIEF FILED			
41	08/11/2006	NOTICE OF APPEAL FILED			
40	08/10/2006	DATE FORWARDED TO EXAMINER			
39	07/27/2006	RESPONSE AFTER NON-FINAL ACTION		34	37
38	07/27/2006	REQUEST FOR EXTENSION OF TIME - GRANTED			
37	03/23/2006	MAIL NON-FINAL REJECTION			
36	03/17/2006	NON-FINAL REJECTION			
35	02/02/2006	DATE FORWARDED TO EXAMINER			
34	01/25/2006	REQUEST FOR CONTINUED EXAMINATION (RCE)		47	23
33	02/02/2006	DISPOSAL FOR A RCE / CPA / R129			
32	01/25/2006	REQUEST FOR EXTENSION OF TIME - GRANTED			
28	01/25/2006	WORKFLOW - REQUEST FOR RCE - BEGIN			
27	12/29/2005	MAIL ADVISORY ACTION (PTOL - 303)			

26	12/27/2005	ADVISORY ACTION (PTOL-303)			
25	11/17/2005	DATE FORWARDED TO EXAMINER			
24	11/09/2005	AMENDMENT AFTER FINAL REJECTION			
23	09/09/2005	MAIL FINAL REJECTION (PTOL - 326)			
22	09/06/2005	FINAL REJECTION			
21	06/28/2005	DATE FORWARDED TO EXAMINER			
20	06/22/2005	RESPONSE AFTER NON-FINAL ACTION		93	16
19	06/16/2005	MAIL NOTICE OF INFORMAL OR NON-RESPONSIVE AMENDMENT			
18	03/21/2005	AFFIDAVIT(S) (RULE 131 OR 132) OR EXHIBIT(S) RECEIVED			
17	03/31/2005	DATE FORWARDED TO EXAMINER			
16.1	03/21/2005	INFORMAL OR NON-RESPONSIVE AMENDMENT AFTER EXAMINER ACTION			
16	03/21/2005	RESPONSE AFTER NON-FINAL ACTION			
15	12/22/2004	MAIL NON-FINAL REJECTION	189		-1
14	12/12/2004	NON-FINAL REJECTION			
13	09/08/2003	IFW TSS PROCESSING BY TECH CENTER COMPLETE			
12.7	04/16/2003	INFORMATION DISCLOSURE STATEMENT (IDS) FILED			
12	04/16/2003	INFORMATION DISCLOSURE STATEMENT (IDS) FILED			
11	06/30/2003	CASE DOCKETED TO EXAMINER IN GAU			
10	06/10/2003	APPLICATION RETURN FROM OIPE			
9	06/10/2003	APPLICATION IS NOW COMPLETE			
8	06/10/2003	APPLICATION RETURN TO OIPE			
7	06/10/2003	APPLICATION DISPATCHED FROM OIPE			
6	06/10/2003	APPLICATION IS NOW COMPLETE			
5	05/15/2003	IFW SCAN & PACR AUTO SECURITY REVIEW			
4	05/08/2003	IFW SCAN & PACR AUTO SECURITY REVIEW			
3	04/23/2003	CRF IS GOOD TECHNICALLY / ENTERED INTO DATABASE			
2	04/16/2003	CRF DISK HAS BEEN RECEIVED BY PREEXAM / GROUP / PCT			
1	04/16/2003	INITIAL EXAM TEAM NN			

Search Another: Application# [ ] Search

EXPLANATION OF PTA CALCULATION

EXPLANATION OF PTE CALCULATION

To go back, right click here and select Back. To go forward, right click here and select Forward. To refresh, right click here and select Refresh.

Back to OASIS | Home page

UNITED STATES PATENT AND TRADEMARK OFFICE

Commissioner for Patents
United States Patent and Trademark Office
P.O. Box 1450
Alexandria, VA 22313-1450
www.uspto.gov

BELL BOYD & LLOYD LLC
P.O. BOX 1135
CHICAGO, IL 60690-1135

In re Application of	:	
Anthony J. Baerlocher	:	
Application No. 10/414,638	:	ON PETITION
Filed: April 14, 2003	:	
Attorney Docket No. 0112300-1361		

This is a decision on the petition, filed August 25, 2004 and supplemented on August 27, 2004, under 37 CFR 1.313(c)(2) to withdraw the above-identified application from issue after payment of the issue fee.

The petition is **GRANTED**.

The above-identified application is withdrawn from issue for consideration of a submission under 37 CFR 1.114 (request for continued examination). See 37 CFR 1.313(c)(2).

Petitioner is advised that the issue fee paid on August 23, 2004 in the above-identified application cannot be refunded. If, however, the above-identified application is again allowed, petitioner may request that it be applied towards the issue fee required by the new Notice of Allowance.[1]

Telephone inquiries should be directed to Irvin Dingle at (703) 306-5684.

The file will be forwarded to Technology Center AU 3713 for processing of the request for continued examination under 37 CFR 1.114 and for consideration of the concurrently filed Information Disclosure Statement.

Irvin Dingle
Petitions Examiner
Office of Petitions
Office of the Deputy Commissioner
for Patent Examination Policy

---

[1] The request to apply the issue fee to the new Notice may be satisfied by completing and returning the new Issue Fee Transmittal Form PTOL-85(b), which includes the following language thereon: Commissioner for Patents is requested to apply the Issue Fee and Publication Fee (if any) or re-apply any previously paid issue fee to the application identified above. Petitioner is advised that, whether a fee is indicated as being due or not, the Issue Fee Transmittal Form **must** be completed and timely submitted to avoid abandonment. Note the language in bold text on the first page of the Notice of Allowance and Fee(s) Due (PTOL-85).

Decision Count Sheet

Office of Petitions Internal Document

Application No. 10/414,638

	Deciding Official
[X] GRANTED	IRVIN DINGLE
[ ] DISMISSED	
[ ] DENIED	Time Period for Reply: ___ None ___ Two (2) Months ___ Other _____

Notes:

12/31/2003

UNITED STATES PATENT AND TRADEMARK OFFICE

Commissioner for Patents
United States Patent and Trademark Office
P.O. Box 1450
Alexandria, VA 22313-1450
www.uspto.gov

BELL BOYD & LLOYD LLC
P.O. BOX 1135
CHICAGO, IL 60690-1135

COPY MAILED

AUG 27 2004

OFFICE OF PETITIONS

In re Application of :
Anthony J. Baerlocher :
Application No. 10/414,638 : ON PETITION
Filed: April 14, 2003 :
Attorney Docket No. 0112300-1361

This is a decision on the petition, filed August 25, 2004 and supplemented on August 27, 2004, under 37 CFR 1.313(c)(2) to withdraw the above-identified application from issue after payment of the issue fee.

The petition is **GRANTED**.

The above-identified application is withdrawn from issue for consideration of a submission under 37 CFR 1.114 (request for continued examination). See 37 CFR 1.313(c)(2).

Petitioner is advised that the issue fee paid on August 23, 2004 in the above-identified application cannot be refunded. If, however, the above-identified application is again allowed, petitioner may request that it be applied towards the issue fee required by the new Notice of Allowance.[1]

Telephone inquiries should be directed to Irvin Dingle at (703) 306-5684.

The file will be forwarded to Technology Center AU 3713 for processing of the request for continued examination under 37 CFR 1.114 and for consideration of the concurrently filed Information Disclosure Statement.

Irvin Dingle
Petitions Examiner
Office of Petitions
Office of the Deputy Commissioner
for Patent Examination Policy

---

[1] The request to apply the issue fee to the new Notice may be satisfied by completing and returning the new Issue Fee Transmittal Form PTOL-85(b), which includes the following language thereon: Commissioner for Patents is requested to apply the Issue Fee and Publication Fee (if any) or re-apply any previously paid issue fee to the application identified above. Petitioner is advised that, whether a fee is indicated as being due or not, the Issue Fee Transmittal Form must be completed and timely submitted to avoid abandonment. Note the language in bold text on the first page of the Notice of Allowance and Fee(s) Due (PTOL-85).

PTO/SB/66 (03-09)
Approved for use through 03/31/2012. OMB 0651-0016
U.S. Patent and Trademark Office: U.S. DEPARTMENT OF COMMERCE
Under the Paperwork Reduction Act of 1995, no persons are required to respond to a collection of information unless it displays valid OMB control number.

PETITION TO ACCEPT UNINTENTIONALLY DELAYED PAYMENT OF MAINTENANCE FEE IN AN EXPIRED PATENT (37 CFR 1.378(c))

Patent Number	Issue Date (YYYY-MM-DD)	Application Number	Filing Date (YYYY-MM-DD)	Docket Number (if applicable)
6,790,506	2004-09-14	10/414,652	2003-04-16	15248.176

CAUTION: Maintenance fee (and surcharge, if any) payment must correctly identify: (1) the patent number and (2) the application number of the actual U.S. application leading to issuance of that patent to ensure the fee(s) is/are associated with the correct patent. 37 CFR 1.366(c) and (d).

SMALL ENTITY
☒ Patentee claims, or has previously claimed, small entity status. See 37 CFR 1.27.

LOSS OF ENTITLEMENT TO SMALL ENTITY STATUS
☐ Patentee is no longer entitled to small entity status. See 37 CFR 1.27(g)

NOT Small Entity		Small Entity	
Fee	Code	Fee	Code
○ 3 ½ year	(1551)	◉ 3 ½ year	(2551)
○ 7 ½ year	(1552)	○ 7 ½ year	(2552)
○ 11 ½ year	(1553)	○ 11 ½ year	(2553)

SURCHARGE
The surcharge required by 37 CFR 1.20(i)(2) (Fee Code 1558) must be paid as a condition of accepting unintentionally delayed payment of the maintenance fee.

MAINTENANCE FEE (37 CFR 1.20(e)-(g))
The appropriate maintenance fee must be submitted with this petition.

STATEMENT
THE UNDERSIGNED CERTIFIES THAT THE DELAY IN PAYMENT OF THE MAINTENANCE FEE TO THIS PATENT WAS UNINTENTIONAL

PETITIONER(S) REQUEST THAT THE DELAYED PAYMENT OF THE MAINTENANCE FEE BE ACCEPTED AND THE PATENT REINSTATED

THIS PORTION MUST BE COMPLETED BY THE SIGNATORY OR SIGNATORIES

37 CFR 1.378(d) states: "Any petition under this section must be signed by an attorney or agent registered to practice before the Patent and Trademark Office, or by the patentee, the assignee, or other party in interest."

I certify, in accordance with 37 CFR 1.4(d)(4) that I am

◉ An attorney or agent registered to practice before the Patent and Trademark Office

○ A sole patentee

○ A joint patentee; I certify that I am authorized to sign this submission on behalf of all the other patentees.

○ A joint patentee; all of whom are signing this e-petition

○ The assignee of record of the entire interest

Patent Practitioner			
A signature of the applicant or representative is required in accordance with 37 CFR 1.33 and 10.18. Please see 37 CFR 1.4(d) for the form of the signature			
Signature	/Evan R. Witt/	Date (YYYY-MM-DD)	2010-06-23
Name	/Evan R. Witt	Registration Number	32512

This collection of information is required by 37 CFR 1.378(c). The information is required to obtain or retain a benefit by the public which is to file (and by the USPTO to process) an application. Confidentiality is governed by 35 U.S.C. 122 and 37 CFR 1.11 and 1.14. This collection is estimated to take 1 hour to complete, including gathering, preparing, and submitting the completed application form to the USPTO. Time will vary depending upon the individual case. Any comments on the amount of time you require to complete this form and/ or suggestions for reducing this burden, should be sent to the Chief Information Officer, U.S. Patent and Trademark Office, U.S. Department of Commerce, P.O. Box 1450, Alexandria, VA 22313-1450. DO NOT SEND FEES OR COMPLETED FORMS TO THIS ADDRESS. **This form can only be used when in conjunction with EFS-Web. If this form is mailed to the USPTO, it may cause delays in reinstating the patent.**

Privacy Act Statement

The Privacy Act of 1974 (P.L. 93-579) requires that you be given certain information in connection with your submission of the attached form related to a patent application or patent. Accordingly, pursuant to the requirements of the Act, please be advised that: (1) the general authority for the collection of this information is 35 U.S.C. 2(b)(2); (2) furnishing of the information solicited is voluntary; and (3) the principal purpose for which the information is used by the U.S. Patent and Trademark Office is to process and/or examine your submission related to a patent application or patent. If you do not furnish the requested information, the U.S. Patent and Trademark Office may not be able to process and/or examine your submission, which may result in termination of proceedings or abandonment of the application or expiration of the patent.

The information provided by you in this form will be subject to the following routine uses:

1. The information on this form will be treated confidentially to the extent allowed under the Freedom of Information Act (5 U.S.C. 552) and the Privacy Act (5 U.S.C. 552a). Records from this system of records may be disclosed to the Department of Justice to determine whether the Freedom of Information Act requires disclosure of these records.

2. A record from this system of records may be disclosed, as a routine use, in the course of presenting evidence to a court, magistrate, or administrative tribunal, including disclosures to opposing counsel in the course of settlement negotiations.

3. A record in this system of records may be disclosed, as a routine use, to a Member of Congress submitting a request involving an individual, to whom the record pertains, when the individual has requested assistance from the Member with respect to the subject matter of the record.

4. A record in this system of records may be disclosed, as a routine use, to a contractor of the Agency having need for the information in order to perform a contract. Recipients of information shall be required to comply with the requirements of the Privacy Act of 1974, as amended, pursuant to 5 U.S.C. 552a(m).

5. A record related to an International Application filed under the Patent Cooperation Treaty in this system of records may be disclosed, as a routine use, to the International Bureau of the World Intellectual Property Organization, pursuant to the Patent Cooperation Treaty.

6. A record in this system of records may be disclosed, as a routine use, to another federal agency for purposes of National Security review (35 U.S.C. 181) and for review pursuant to the Atomic Energy Act (42 U.S.C. 218(c)).

7. A record from this system of records may be disclosed, as a routine use, to the Administrator, General Services, or his/her designee, during an inspection of records conducted by GSA as part of that agency's responsibility to recommend improvements in records management practices and programs, under authority of 44 U.S.C. 2904 and 2906. Such disclosure shall be made in accordance with the GSA regulations governing inspection of records for this purpose, and any other relevant (i.e., GSA or Commerce) directive. Such disclosure shall not be used to make determinations about individuals.

8. A record from this system of records may be disclosed, as a routine use, to the public after either publication of the application pursuant to 35 U.S.C. 122(b) or issuance of a patent pursuant to 35 U.S.C. 151. Further, a record may be disclosed, subject to the limitations of 37 CFR 1.14, as a routine use, to the public if the record was filed in an application which became abandoned or in which the proceedings were terminated and which application is referenced by either a published application, an application open to public inspections or an issued patent.

9. A record from this system of records may be disclosed, as a routine use, to a Federal, State, or local law enforcement agency, if the USPTO becomes aware of a violation or potential violation of law or regulation.

UNITED STATES PATENT AND TRADEMARK OFFICE

Commissioner for Patents
United States Patent and Trademark Office
P.O. Box 1450
Alexandria, VA 22313-1450
www.uspto.gov

In re Patent No. 6790506
Issue Date: September 14,2004
Application No. 10414652
Filed: April 16,2003
Attorney Docket No. DEE-PT015.1

:
:DECISION GRANTING PETITION
:UNDER 37 CFR 1.378(c)
:

This is a decision on the electronic petition, filed June 23,2010 ,under 37 CFR 1.378(c) to accept the unintentionally delayed payment of the 3.5 year maintenance fee for the above-identified patent.

The petition is **GRANTED**.

The maintenance fee is accepted, and the above-identified patent reinstated as of June 23,2010 .
This decision also constitutes notice that the fee has been accepted. An electronic copy of the petition and this decision has been created as an entry in the Image File Wrapper. Nevertheless, petitioner should print and retain an independent copy.

Telephone inquiries related to this electronic decision should be directed to the Electronic Business Center at 1-866-217-9197.

UNITED STATES PATENT AND TRADEMARK OFFICE

COMMISSIONER FOR PATENTS
UNITED STATES PATENT AND TRADEMARK OFFICE
P.O. BOX 1450
ALEXANDRIA, VA 22313-1450
www.uspto.gov

DARA L. ONOFRIO, ESQ.
C/O ONOFRIO LAW
1133 BROADWAY - SUITE 1600
NEW YORK, NY 10010

COPY MAILED

MAR 0 3 2004

OFFICE OF PETITIONS

In re Application of	:
Gregory Chotkowski et al	:DECISION GRANTING FILING
Application No. 10/414,657	:DATE OF APRIL 16, 2003
Filed: April 16, 2003	:
Attorney Docket No. CHOT 103	:

This is a decision on the petition filed August 25, 2003, and supplemented by facsimile transmission on September 16, 2003, requesting that the above-identified application be accorded a filing date of April 16, 2003, rather than the presently accorded date of April 17, 2003.

The petition is accompanied by a copy of applicant's Express Mail customer receipt showing that the Express Mail package in question was deposited in Express Mail service on April 16, 2003, although the "date-in" is April 17, 2003. Nevertheless, the other available evidence, the Internet USPS Express Mail Tracking and Delivery Confirmation discloses that the package was actually deposited on April 16, 2003. Additionally, the Express Mail label No. EV 095403890 US is the same number appearing on the "Utility Patent Application Transmittal."

In view of the evidence in the file, it is concluded that the application was deposited in Express Mail service on April 16, 2003. Accordingly, the instant application is entitled to a filing date of April 16, 2003 and has been so accorded. A filing receipt with the corrected filing date will be mailed in due course.

The petition is **granted**.

The application will be forwarded to Office of Initial Patent Examination for processing with a filing date of April 16, 2003.

Telephone inquiries specific to this decision on petition should be directed to Karen Creasy at (703) 305-8859.

Brian Hearn

Brian Hearn
Senior Petitions Examiner
Office of Petitions
Office of the Deputy Commissioner
for Patent Examination Policy

UNITED STATES PATENT AND TRADEMARK OFFICE

COMMISSIONER FOR PATENTS
UNITED STATES PATENT AND TRADEMARK OFFICE
P.O. BOX 1450
ALEXANDRIA, VA 22313-1450
www.uspto.gov

ExxonMobil Chemical Company
Law Technology
P.O. Box 2149
Baytown TX 77522-2149

COPY MAILED

APR 0 7 2004

OFFICE OF PETITIONS

Applicant: Husar et.
Appl. No.: 10/414,658
Filing Date: April 16, 2003
Title: TRANSALKYLATION OF AROMATIC FLUIDS
Pub. No.: US 2004/0006251 A1
Pub. Date: January 8, 2003

This is in response to the request for correction of patent application publication under 37 CFR 1.221(b), which was received via telephone on April 5, 2004 for the above-identified application.

The request is DISMISSED.

The instant request is that the application be republished because published application includes a benefit claim to a PCT application, which was not made by applicant.

37 CFR 1.221(b) is applicable "only when the Office makes a material mistake which is apparent from Office records . . . Any request for a corrected publication or revised patent application publication other than provided as provided in paragraph (a) of this section must be filed within two months from the date of the patent application publication. This period is not extendable." The request for corrected publication received was not timely filed under 37 CFR 1.221(b).

Due to the nature of the errors in this publication, the Office will *sua sponte* publish a corrected patent application publication. The corrected patent application publication will be published in due course, unless the application is allowed and the patent issues before the application is republished.

Inquires concerning this communication should be directed to Mark Polutta at (703) 308-8122 (voice) or (703) 746-3465 (facsimile).

Mark O. Polutta
Office of Patent Legal Administration
Office of the Deputy Commissioner
for Patent Examination Policy

UNITED STATES PATENT AND TRADEMARK OFFICE

Commissioner for Patents
United States Patent and Trademark Office
P.O. Box 1450
Alexandria, VA 22313-1450
www.uspto.gov

In re Patent No. 6764368
Issue Date: July 20,2004
Application No. 10414679
Filed: April 16,2003
Attorney Docket No. 46872/263988

:
:DECISION GRANTING PETITION
:UNDER 37 CFR 1.378(c)
:

This is a decision on the electronic petition, filed September 30,2008 ,under 37 CFR 1.378(c) to accept the unintentionally delayed payment of the 3.5 year maintenance fee for the above-identified patent.

The petition is **GRANTED**.

The maintenance fee is accepted, and the above-identified patent reinstated as of September 30,2008 . This decision also constitutes notice that the fee has been accepted. An electronic copy of the petition and this decision has been created as an entry in the Image File Wrapper. Nevertheless, petitioner should print and retain an independent copy.

Telephone inquiries related to this electronic decision should be directed to the Electronic Business Center at 1-866-217-9197.

Under the Paperwork Reduction Act of 1995, no persons are required to respond to a collection of information unless it displays valid OMB control number.

PETITION TO ACCEPT UNINTENTIONALLY DELAYED PAYMENT OF MAINTENANCE FEE IN AN EXPIRED PATENT (37 CFR 1.378(c))

Patent Number	Issue Date (YYYY-MM-DD)	Application Number	Filing Date (YYYY-MM-DD)	Docket Number (if applicable)
6,764,368	2004-07-20	10/414,679	2003-04-16	46872/263988

CAUTION: Maintenance fee (and surcharge, if any) payment must correctly identify: (1) the patent number and (2) the application number of the actual U.S. application leading to issuance of that patent to ensure the fee(s) is/are associated with the correct patent. 37 CFR 1.366(c) and (d).

SMALL ENTITY
☒ Patentee claims, or has previously claimed, small entity status. See 37 CFR 1.27.

LOSS OF ENTITLEMENT TO SMALL ENTITY STATUS
☐ Patentee is no longer entitled to small entity status. See 37 CFR 1.27(g)

NOT Small Entity			Small Entity		
	Fee	Code		Fee	Code
○	3 ½ year	(1551)	◉	3 ½ year	(2551)
○	7 ½ year	(1552)	○	7 ½ year	(2552)
○	11 ½ year	(1553)	○	11 ½ year	(2553)

SURCHARGE
The surcharge required by 37 CFR 1.20(i)(2) (Fee Code 1558) must be paid as a condition of accepting unintentionally delayed payment of the maintenance fee.

MAINTENANCE FEE (37 CFR 1.20(e)-(g))
The appropriate maintenance fee must be submitted with this petition.

STATEMENT
THE UNDERSIGNED CERTIFIES THAT THE DELAY IN PAYMENT OF THE MAINTENANCE FEE TO THIS PATENT WAS UNINTENTIONAL

PETITIONER(S) REQUEST THAT THE DELAYED PAYMENT OF THE MAINTENANCE FEE BE ACCEPTED AND THE PATENT REINSTATED

THIS PORTION MUST BE COMPLETED BY THE SIGNATORY OR SIGNATORIES

37 CFR 1.378(d) states: "Any petition under this section must be signed by an attorney or agent registered to practice before the Patent and Trademark Office, or by the patentee, the assignee, or other party in interest."

I certify, in accordance with 37 CFR 1.4(d)(4) that I am

◉ An attorney or agent registered to practice before the Patent and Trademark Office

○ A sole patentee

○ A joint patentee; I certify that I am authorized to sign this submission on behalf of all the other patentees.

○ A joint patentee; all of whom are signing this e-petition

○ The assignee of record of the entire interest

Patent Practitioner			
A signature of the applicant or representative is required in accordance with 37 CFR 1.33 and 10.18. Please see 37 CFR 1.4(d) for the form of the signature			
Signature	/John C. Alemanni/	Date (YYYY-MM-DD)	2008-09-30
Name	John C. Alemanni	Registration Number	47384

This collection of information is required by 37 CFR 1.378(c). The information is required to obtain or retain a benefit by the public which is to file (and by the USPTO to process) an application. Confidentiality is governed by 35 U.S.C. 122 and 37 CFR 1.11 and 1.14. This collection is estimated to take 1 hour to complete, including gathering, preparing, and submitting the completed application form to the USPTO. Time will vary depending upon the individual case. Any comments on the amount of time you require to complete this form and/ or suggestions for reducing this burden, should be sent to the Chief Information Officer, U.S. Patent and Trademark Office, U.S. Department of Commerce, P.O. Box 1450, Alexandria, VA 22313-1450. DO NOT SEND FEES OR COMPLETED FORMS TO THIS ADDRESS. **This form can only be used when in conjunction with EFS-Web. If this form is mailed to the USPTO, it may cause delays in reinstating the patent.**

Privacy Act Statement

The Privacy Act of 1974 (P.L. 93-579) requires that you be given certain information in connection with your submission of the attached form related to a patent application or patent. Accordingly, pursuant to the requirements of the Act, please be advised that: (1) the general authority for the collection of this information is 35 U.S.C. 2(b)(2); (2) furnishing of the information solicited is voluntary; and (3) the principal purpose for which the information is used by the U.S. Patent and Trademark Office is to process and/or examine your submission related to a patent application or patent. If you do not furnish the requested information, the U.S. Patent and Trademark Office may not be able to process and/or examine your submission, which may result in termination of proceedings or abandonment of the application or expiration of the patent.

The information provided by you in this form will be subject to the following routine uses:

1. The information on this form will be treated confidentially to the extent allowed under the Freedom of Information Act (5 U.S.C. 552) and the Privacy Act (5 U.S.C. 552a). Records from this system of records may be disclosed to the Department of Justice to determine whether the Freedom of Information Act requires disclosure of these record s.

2. A record from this system of records may be disclosed, as a routine use, in the course of presenting evidence to a court, magistrate, or administrative tribunal, including disclosures to opposing counsel in the course of settlement negotiations.

3. A record in this system of records may be disclosed, as a routine use, to a Member of Congress submitting a request involving an individual, to whom the record pertains, when the individual has requested assistance from the Member with respect to the subject matter of the record.

4. A record in this system of records may be disclosed, as a routine use, to a contractor of the Agency having need for the information in order to perform a contract. Recipients of information shall be required to comply with the requirements of the Privacy Act of 1974, as amended, pursuant to 5 U.S.C. 552a(m).

5. A record related to an International Application filed under the Patent Cooperation Treaty in this system of records may be disclosed, as a routine use, to the International Bureau of the World Intellectual Property Organization, pursuant to the Patent Cooperation Treaty.

6. A record in this system of records may be disclosed, as a routine use, to another federal agency for purposes of National Security review (35 U.S.C. 181) and for review pursuant to the Atomic Energy Act (42 U.S.C. 218(c)).

7. A record from this system of records may be disclosed, as a routine use, to the Administrator, General Services, or his/her designee, during an inspection of records conducted by GSA as part of that agency's responsibility to recommend improvements in records management practices and programs, under authority of 44 U.S.C. 2904 and 2906. Such disclosure shall be made in accordance with the GSA regulations governing inspection of records for this purpose, and any other relevant (i.e., GSA or Commerce) directive. Such disclosure shall not be used to make determinations about individuals.

8. A record from this system of records may be disclosed, as a routine use, to the public after either publication of the application pursuant to 35 U.S.C. 122(b) or issuance of a patent pursuant to 35 U.S.C. 151. Further, a record may be disclosed, subject to the limitations of 37 CFR 1.14, as a routine use, to the public if the record was filed in an application which became abandoned or in which the proceedings were terminated and which application is referenced by either a published application, an application open to public inspections or an issued patent.

9. A record from this system of records may be disclosed, as a routine use, to a Federal, State, or local law enforcement agency, if the USPTO becomes aware of a violation or potential violation of law or regulation.

UNITED STATES PATENT AND TRADEMARK OFFICE

Commissioner for Patents
United States Patent and Trademark Office
P.O. Box 1450
Alexandria, VA 22313-1450
www.uspto.gov

COPY MAILED
OCT 16 2006
OFFICE OF PETITIONS

CATALYST LAW GROUP, APC
9710 SCRANTON ROAD, SUITE S-170
SAN DIEGO CA 92121

In re Application of	:	
WAGNER, et al.	:	
Application No. 10/414,692	:	DECISION ON PETITION
Filed: April 14, 2003	:	TO WITHDRAW
Attorney Docket No. 8012-002-US	:	FROM RECORD
	:	

This is a decision on the Request to Withdraw as attorney or agent of record under 37 C.F.R. § 1.36(b), filed June 27, 2006.

The request is **NOT APPROVED**.

A grantable request to withdraw as attorney/agent of record must be signed by every attorney/agent seeking to withdraw or contain a clear indication that one attorney is signing on behalf of another/others. A request to withdraw will not be approved unless at least 30 (thirty) days would remain between the date of approval and the later of the expiration date of a time to file a response or the expiration date of the maximum time period which can be extended under 37 C.F.R. § 1.136(a).

The request cannot be approved because no reasons for withdrawal have been provided. The Office cannot, at this time, determine whether practitioner's request is one of the mandatory or permissive reasons enumerated in 37 CFR 10.40. Any subsequent requests must include reasons for withdrawal. Please note that there is a space provided for on PTO/SB/83 (Request to Withdraw as Attorney or Agent) to supply practitioner's reasons.

All future communications from the Office will continue to be directed to the above-listed address until otherwise notified by applicant.

Telephone inquiries concerning this decision should be directed to Monica A. Graves at 571-272-7253.

David Bucci
Petitions Examiner
Office of Petitions

cc: **MCDONNELL BOEHNEN**
HULBERT & BERGHOFF LLP
300 South Wacker Drive
Chicago, IL 60606

UNITED STATES PATENT AND TRADEMARK OFFICE

Commissioner for Patents
United States Patent and Trademark Office
P.O. Box 1450
Alexandria, VA 22313-1450
www.uspto.gov

COPY MAILED

JAN 17 2007

OFFICE OF PETITIONS

CATALYST LAW GROUP, APC
9710 SCRANTON ROAD, SUITE S-170
SAN DIEGO CA 92121

In re Application of	:	
WAGNER, et al.	:	
Application No. 10/414,692	:	DECISION ON PETITION
Filed: April 14, 2003	:	TO WITHDRAW
Attorney Docket No. 8012-002-US	:	FROM RECORD
	:	

This is a decision on the Request to Withdraw as attorney or agent of record under 37 C.F.R. § 1.36(b), filed October 25, 2006.

The request is **APPROVED**.

A grantable request to withdraw as attorney/agent of record must be signed by every attorney/agent seeking to withdraw or contain a clear indication that one attorney is signing on behalf of another/others. A request to withdraw will not be approved unless at least 30 (thirty) days would remain between the date of approval and the later of the expiration date of a time to file a response or the expiration date of the maximum time period which can be extended under 37 C.F.R. § 1.136(a).

The request was signed by David M. Kohn on behalf of all attorneys of record who are associated with customer No. 32301. All attorneys/agents associated with the Customer Number 32301 have been withdrawn. Applicant is reminded that there is no attorney of record at this time.

The request to change the correspondence of record is not acceptable as the requested correspondence address is not that of: (1) the first named signing inventor; or (2) an intervening assignee of the entire interest under 37 C.F.R 3.71. All future communications from the Office will be directed to the first named signing inventor at the first copied address below until otherwise properly notified by the applicant.

Telephone inquiries concerning this decision should be directed to the undersigned at 571-272-7253.

Monica A. Graves
Petitions Examiner
Office of Petitions

cc: **BYANDEE LYNN WAGNER**
4757 NEXUS CENTRE DRIVE, SUITE 200
SAN DIEGO, CA 92121

cc: **MCDONNELL BOEHNEN HULBERT & BERGHOFF LLP**
300 SOUTH WACKER DRIVE
CHICAGO, IL 60606

UNITED STATES PATENT AND TRADEMARK OFFICE

Commissioner for Patents
United States Patent and Trademark Office
P.O. Box 1450
Alexandria, VA 22313-1450
www.uspto.gov

BYANDEE LYNN WAGNER
4757 NEXUS CENTRE DRIVE, SUITE 200
SAN DIEGO CA 92121

In re Application of	:	
WAGNER, et al.	:	
Application No. 10/414,692	:	DECISION ON REQUEST FOR
Filed: April 14, 2003	:	REVOCATION OF POWER
Attorney Docket No. 8012-002-US	:	OF ATTORNEY
	:	

This is a decision on the Request to Revoke the attorney or agent of record under 37 C.F.R. § 1.36(a), filed December 11, 2006.

The request is **NOT APPROVED**.

A power of attorney, pursuant to § 1.32(b), may be revoked at any stage in the proceeding of a case by an applicant for patent (§ 1.41(b)) or an assignee of the entire interest of the applicant under § 3.71(b). Fewer than all of the applicants (or by fewer than the assignee of the entire interest of the applicant) may only revoke the power of attorney upon a showing of sufficient cause, and payment of the petition fee set forth § 1.17(h). For the assignee to take action a proper statement under § 3.73(b) is required.

The request cannot be approved because the statement under 3.73(b) **is not proper** in that the reel and frame number provided is incorrect or not associated with the above application.

All future communications from the Office will continue to be directed to the above-listed address until otherwise notified by applicant. Telephone inquiries concerning this decision should be directed to the undersigned at 571-272- 7253.

Monica A. Graves
Petitions Examiner
Office of Petitions

cc: **MCDONNELL BOEHNEN HULBERT & BERGHOFF LLP**
300 SOUTH WACKER DRIVE, SUITE 3100
CHICAGO, IL 60606

UNITED STATES PATENT AND TRADEMARK OFFICE

UNITED STATES DEPARTMENT OF COMMERCE
United States Patent and Trademark Office
Address: COMMISSIONER FOR PATENTS
P.O. Box 1450
Alexandria, Virginia 22313-1450
www.uspto.gov

APPLICATION NUMBER	FILING OR 371 (c) DATE	FIRST NAMED APPLICANT	ATTY. DOCKET NO./TITLE
10/414,692	04/14/2003	Brandee Lynn Wagner	8012-002-US

CONFIRMATION NO. 5353

OC000000022006260

32301
CATALYST LAW GROUP, APC
9710 SCRANTON ROAD, SUITE S-170
SAN DIEGO, CA 92121

Date Mailed: 01/16/2007

NOTICE REGARDING CHANGE OF POWER OF ATTORNEY

This is in response to the Power of Attorney filed 10/25/2006.

- The withdrawal as attorney in this application has been accepted. Future correspondence will be mailed to the new address of record. 37 CFR 1.33.

MONICA A GRAVES
OP (571) 272-7253

FORMER ATTORNEY/AGENT COPY

UNITED STATES PATENT AND TRADEMARK OFFICE

Commissioner for Patents
United States Patent and Trademark Office
P.O. Box 1450
Alexandria, VA 22313-1450
www.uspto.gov

HEWLETT PACKARD COMPANY
P O BOX 272400, 3404 E. HARMONY ROAD
INTELLECTUAL PROPERTY ADMINISTRATION
FORT COLLINS CO 80527-2400

COPY MAILED

MAY 28 2008

In re Application of :
Jarp :
Application No. 10/414,706 : DECISION
Filed: 15 April, 2003 :
Attorney Docket No. 200206377-1

This is a decision on the petition filed on 22 January, 2008, to revive an application under 37 C.F.R. §1.137(b) as having been abandoned due to unintentional delay.

The Office regrets the delay in addressing this matter, however, the instant petition was presented to the attorneys in the Office of Petitions only at this writing.

The requirements of a grantable petition pursuant to 37 C.F.R. §1.137(b) are the petition and fee therefor, a reply, a proper statement of unintentional delay under the regulation, and, where applicable, a terminal disclaimer and fee. (However, it does not appear that a terminal disclaimer and fee are due here.)

The petition under 37 C.F.R. §1.137(b) is **GRANTED**.

BACKGROUND

The record reflects that:

Petitioner failed to reply to a final Office action mailed on 11 June, 2007, with reply due absent an extension of time on or before 11 September, 2007.

Best Available Copy

The application went abandoned by operation of law after midnight 11 September, 2007.

It does not appear that the Office mailed the Notice of Abandonment before the instant petition was filed.

On 22 January, 2008, Petitioner filed, *inter alia*, the instant petition (with fee) alleging unintentional delay under 37 C.F.R. §1.137(b), included therewith a reply in the form of a request and fee for continued examination (RECE) and an amendment as the submission under 37 C.F.R. §1.114), and made the statement of unintentional delay.

The Office mailed the Notice of Abandonment on 12 March, 2008.

The availability of applications and application papers online to applicants/practitioners who diligently associate their Customer Number with the respective application(s) now provides an applicant/practitioner on-demand information as to events/transactions in an application. Thus, now if one wishes to know the progress in and/or status of an application or the accuracy of the data therein, one need only look at the file online.

Out of an abundance of caution, Petitioners always are reminded that those registered to practice *and* all others who make representations before the Office must inquire into the underlying facts of representations made to the Office and support averments with the appropriate documentation–since all owe to the Office the continuing duty to disclose.[1]

STATUTES, REGULATIONS

Congress has authorized the Commissioner to "revive an application if the delay is shown to the satisfaction of the Commissioner to have been "unavoidable." 35 U.S.C. §133 (1994).

The regulations at 37 C.F.R. §1.137(a) and (b) set forth the requirements for a Petitioner to revive a previously unavoidably or unintentionally, respectively, abandoned application.[2],[3]

---

[1] See supplement of 17 June, 1999. The Patent and Trademark Office is relying on petitioner's duty of candor and good faith and accepting a statement made by Petitioner. See Changes to Patent Practice and Procedure, 62 Fed. Reg. at 53160 and 53178, 1203 Off. Gaz. Pat. Office at 88 and 103 (responses to comments 64 and 109)(applicant obligated under 37 C.F.R. §10.18 to inquire into the underlying facts and circumstances when providing statements to the Patent and Trademark Office). See specifically, the regulations at 37 C.F.R. §10.18.

[2] See: Changes to Patent Practice and Procedure; Final Rule Notice, 62 Fed. Reg. at 53158-59 (October 10, 1997), 1203 Off. Gaz. Pat. Office at 86-87 (October 21, 1997).

[3] The language of 35 U.S.C. §133 and 37 C.F.R. §1.137(a) is clear, unambiguous, and without qualification: the delay in tendering the reply to the outstanding Office action, as well as filing the first petition seeking revival, must have been unavoidable for the reply now to be accepted on petition. (Therefore, by example, an unavoidable delay in the payment of the Filing Fee might occur if a reply is shipped by the US Postal Service, but due to catastrophic accident, the delivery is not made.) Delays in responding properly raise the question whether delays are unavoidable. Where there is a question whether the delay was unavoidable, Petitioners must meet the burden of establishing that the delay was unavoidable within the meaning of 35 U.S.C. §133 and 37 C.F.R. §1.137(a) And the Petitioner must be diligent in attending to the matter. Failure to do so does not constitute the care required under Pratt, and so cannot satisfy the test for diligence and due care. (By contrast, unintentional delays are those that do not satisfy the very strict statutory and regulatory requirements of unavoidable delay; and also, by definition, are not intentional.))

Best Available Copy

CONCLUSION

The instant petition under 37 C.F.R. §1.137(b) is **granted**.

The instant application is released to Technology Center/AU 2191 for further processing in due course.

Petitioner may find it beneficial to view Private PAIR within a fortnight of the instant decision to ensure that the revival has been acknowledged by the Technology Center/AU in response to this decision. It is noted that all inquiries with regard to that change in status need be directed to the Technology Center/AU where that change of status must be effected—that does not occur in the Office of Petitions.

While telephone inquiries regarding this decision may be directed to the undersigned at (571) 272-3214, it is noted that all practice before the Office is in writing (see: 37 C.F.R. §1.2[4]) and the proper authority for action on any matter in this regard are the statutes (35 U.S.C.), regulations (37 C.F.R.) and the commentary on policy (MPEP). Therefore, no telephone discussion may be controlling or considered authority for Petitioner's action(s).

/John J. Gillon, Jr./
John J. Gillon, Jr.
Senior Attorney
Office of Petitions

---

[4] The regulations at 37 C.F.R. §1.2 provide:
§1.2 Business to be transacted in writing.
All business with the Patent and Trademark Office should be transacted in writing. The personal attendance of applicants or their attorneys or agents at the Patent and Trademark Office is unnecessary. The action of the Patent and Trademark Office will be based exclusively on the written record in the Office. No attention will be paid to any alleged oral promise, stipulation, or understanding in relation to which there is disagreement or doubt.

SPE RESPONSE FOR CERTIFICATE OF CORRECTION

Paper No.: —

DATE : 1/17/07

TO SPE OF : ART UNIT 3743

SUBJECT : Request for Certificate of Correction for Appl. No.: 10/414726 Patent No.: 7128724 B2

Please respond to this request for a certificate of correction within 7 days.

Please review the requested changes/corrections as shown in the **COCIN** document(s) in the IFW application image. No new matter should be introduced, nor should the scope or meaning of the claims be changed.

Please complete the response (see below) and forward the completed response to scanning using document code **COCX**.

Virginia Tolbert
Certificates of Correction Branch

703-308-9390 ext. 113

Thank You For Your Assistance

The request for issuing the above-identified correction(s) is hereby:
Note your decision on the appropriate box.

- ☑ **Approved** — **All** changes apply.
- ☐ **Approved in Part** — Specify below which changes **do not** apply.
- ☐ **Denied** — State the reasons for denial below.

Comments: _____

SPE — Art Unit 3772

UNITED STATES PATENT AND TRADEMARK OFFICE

MAR -2 2005

Commissioner for Patents
United States Patent and Trademark Office
P.O. Box 1450
Alexandria, VA 22313-1450
www.uspto.gov

YEAH-SIL MOON
JONES DAY
222 EAST 41ST ST
NEW YORK NY 10017

In re Application of Moon et al.	
Serial No.: 10/414,740	PETITION DECISION
Filed: April 16, 2003	
Attorney Docket No.: 10981-31-999	

This is in response to the petition under 37 CFR 1.181, filed January 13, 2005, for withdrawal of abandonment of the above identified application based on evidence that the reply was timely filed.

A review of the file history shows that the Examiner allowed the application on June 17, 2004. The issue fee was then paid on August 23, 2004. However, the Draftsperson mailed a Notice to Submit Corrected Drawings to the applicants on September 15, 2004, providing a non-extendable two-month time period for response. Upon failure to receive a reply the Office mailed a Notice of Abandonment to applicants on January 3, 2005.

Applicants state that a response to the Notice to Submit Corrected Drawings, including a drawing labeled "Figure 1," was mailed on October 15, 2004. Applicants provided a copy of the above-mentioned items and a postcard receipt for the items from the Patent and Trademark Office dated October 15, 2004. In view of the evidence presented the Notice of Abandonment is withdrawn and the application is restored to pending status with the mailing of this decision.

The petition is therefore **GRANTED**.

The application will be forwarded to the Publications Branch.

Should there be any questions about this decision please contact Jean Vollano, by letter addressed to Director, TC 1600, at the address listed above, or by telephone at 571-272-0648, or by facsimile sent to the general Office facsimile number, 703-872-9306.

Gian F Villani for
Bruce Kisliuk
Director, Technology Center 1600

UNITED STATES PATENT AND TRADEMARK OFFICE

COMMISSIONER FOR PATENTS
UNITED STATES PATENT AND TRADEMARK OFFICE
P.O. BOX 1450
ALEXANDRIA, VA 22313-1450
www.uspto.go

Paper No. 3

ARNALL GOLDEN GREGORY LLP
1201 WEST PEACHTREE STREET
SUITE 2800
ATLANTA, GA 30309

COPY MAILED

JUL 3 1 2003

OFFICE OF PETITIONS

In re Application of :
Jonathan S. Colton :
Application No. 10/414,744 :
Filed: April 15, 2003 :
Attorney Docket No. 11326.18 :

This is a decision in response to the petition under 37 CFR 1.10(c), filed June 23, 2003, Requesting the application be accorded a filing date of April 15, 2003, instead of the presently accorded filing date of April 16, 2003.

Petitioner alleges the application was deposited in "Express Mail" service with the U.S. Postal Service, on April 15, 2003. In support, Petitioner provides a copy of the Express Mail label, receipt number EV221548813US, with a "Date-In" of April 15, 2003. The Express Mail label contains a United States Postal Service (USPS) stamp of April 15, 2003. The same Express Mail label number was placed on the original application papers located in the official file.

The Office considers the date the correspondence is shown to have been deposited as "Express Mail" to be the "date-in" on the Express Mail mailing label. *See* MPEP §513. The date indicated on the "date-in" on the Express Mail mailing label verifies that the package was actually mailed. In view of the above, the evidence is convincing that the application was deposited as "Express Mail" with the US Postal Service on April 15, 2003.

In view of the foregoing, this Petition in **Granted**.

This application is being forwarded to the Office of Initial Patent Examination for correction of the filing date to May 1, 2003.

Telephone inquiries concerning this matter should be directed to Petitions Attorney Derek L. Woods at (703) 305-0014.

Derek L. Woods
Petitions Attorney
Office of Petitions

UNITED STATES PATENT AND TRADEMARK OFFICE

Commissioner for Patents
United States Patent and Trademark Office
P.O. Box 1450
Alexandria, VA 22313-1450
www.uspto.gov

LAWRENCE E. ASHERY
P.O. BOX 980
VALLEY FORGE, PA 19482

COPY MAILED

MAR 0 4 2005

OFFICE OF PETITIONS

In re Patent No. 6,819,216 :
Issue Date: November 16, 2004 :
Application No. 10/414,752 : ON PETITION
Filed: April 16, 2003 :
Attorney Docket No. MAT-8399US :

This is a decision on the petition filed February 10, 2005, which is being treated as a petition under 37 CFR 3.81(b)[1] to correct the assignee's name on the front page of the above-identified patent by way of a Certificate of Correction.

The petition is **granted.**

Telephone inquiries concerning this matter may be directed to the undersigned at (571) 272-3210. Any questions concerning the issuance of the Certificate of Correction should be directed to the Certificates of Correction Branch at (703) 305-8309.

This matter is being forwarded to the Certificates of Correction Branch for issuance of the requested Certificate of Correction.

Irvin Dingle
Petitions Examiner
Office of Petitions
Office of the Deputy Commissioner
for Patent Examination Policy

[1] See Official Gazette of June 22, 2004

UNITED STATES PATENT AND TRADEMARK OFFICE

Commissioner for Patents
United States Patent and Trademark Office
P.O. Box 1450
Alexandria, VA 22313-1450
www.uspto.gov

JORDAN AND HAMBURG
122 EAST 42ND STREET
SUITE 4000
NEW YORK NY 10168

COPY MAILED

JUN 3 0 2005

OFFICE OF PETITIONS

In re Application of	:	
Seiji Toda et al	:	
Application No. 10/414,755	:	ON PETITION
Filed: April 16, 2003	:	
Attorney Docket No. F-7798	:	

This is a decision on the petition, filed June 29, 2005, under 37 CFR 1.313(c)(2) to withdraw the above-identified application from issue after payment of the issue fee.

The petition is **GRANTED.**

The above-identified application is withdrawn from issue for consideration of a submission under 37 CFR 1.114 (request for continued examination). See 37 CFR 1.313(c)(2).

Petitioner is advised that the issue fee paid on April 11, 2005 in the above-identified application cannot be refunded. If, however, the above-identified application is again allowed, petitioner may request that it be applied towards the issue fee required by the new Notice of Allowance.[1]

Telephone inquiries should be directed to the undersigned at (571) 272-3208.

The examiner of Technology Center AU 2858 will consider the request for continued examination under 37 CFR 1.114.

Karen Creasy
Petitions Examiner
Office of Petitions
Office of the Deputy Commissioner
for Patent Examination Policy

---

[1] The request to apply the issue fee to the new Notice may be satisfied by completing and returning the new Issue Fee Transmittal Form PTOL-85(b), which includes the following language thereon: "Commissioner for Patents is requested to apply the Issue Fee and Publication Fee (if any) or re-apply any previously paid issue fee to the application identified above." Petitioner is advised that, whether a fee is indicated as being due or not, the Issue Fee Transmittal Form **must** be completed and timely submitted to avoid abandonment. Note the language in bold text on the first page of the Notice of Allowance and Fee(s) Due (PTOL-85).

UNITED STATES PATENT AND TRADEMARK OFFICE

COMMISSIONER FOR PATENTS
UNITED STATES PATENT AND TRADEMARK OFFICE
P.O. BOX 1450
ALEXANDRIA, VA 22313-1450
www.uspto.gov

Paper No. _____

Date : June 30, 2005

TO : Director, Office of Patent Publication

FROM : Office of the Deputy Commissioner
for Patent Examination Policy

SUBJECT : Withdrawal from Issue of

Applicant(s) :Seiji Toda et al
Application No. :10/414,755
Filed :April 16, 2003

The above-identified application has been assigned Patent No. 6,914,438 and an issue date of July 5, 2005.

It is hereby directed that this application be withdrawn from issue at the request of the applicant.

Do not refund the issue fee.

The following erratum should be published in the Official Gazette if the above-identified application is published in the OG of July 5, 2005:

"All reference to Patent No. 6,914,438 to Seiji Toda et al of Japan for POSITIOIN SENSOR appearing in the Official Gazette of July 5, 2005 should be deleted since no patent was granted."

Karen Creasy

Karen Creasy
Petitions Examiner
Office of Petitions
Office of the Deputy Commissioner
for Patent Examination Policy

cc: Paul Harrison, MDW-4B03,(FAX-273-5468)
Deneise Boyd, MDE-3D39 (FAX-273-5124)
Mary Louise McAskill, ST-8C15 (FAX 305-4372)
Niomi Farmer, ST-8C14 (FAX-305-4372)
Mary E. Johnson (Cookie), MDE-7C71 (FAX 273-0038
Duane Davis P/OPC MDE-7D89
Tamara Greene, ST-8C13

UNITED STATES PATENT AND TRADEMARK OFFICE

UNITED STATES DEPARTMENT OF COMMERCE
United States Patent and Trademark Office
Address: COMMISSIONER FOR PATENTS
P.O. Box 1450
Alexandria, Virginia 22313-1450
www.uspto.gov

ABBOTT CARDIOVASCULAR SYSTEMS INC./BSTZ
BLAKELY SOKOLOFF TAYLOR & ZAFMAN LLP
1279 OAKMEAD PARKWAY
SUNNYVALE, CA 94085-4040

Mail Date: 04/21/2010

Applicant	: Eugene T. Michal	: DECISION ON REQUEST FOR
Patent Number	: 7641643	: RECALCULATION of PATENT
Issue Date	: 01/05/2010	: TERM ADJUSTMENT IN VIEW
Appliction No	: 10/414,767	: OF WYETH AND NOTICE OF INTENT TO
Filed	: 04/15/2003	: ISSUE CERTIFICATE OF CORRECTION
		:

The Request for Recalculation is **GRANTED** to the extent indicated.

The patent term adjustment has been determined to be **1814** days. The USPTO will *sua sponte* issue a certificate of correction reflecting the amount of PTA days determined by the recalculation.

Prior to the issuance of the certificate of correction, the USPTO will afford patentee an opportunity to be heard and request reconsideration. Accordingly, patentee has **one month or thirty (30) days**, whichever is longer, to file a request for reconsideration of this patent term adjustment calculation. See 35 U.S.C. 154(b)(3)(B)(ii) and 37 CFR 1.322(a)(4). No extensions of time will be granted under 37 CFR 1.136.

Patentee should use document code PET.OP if electronically filing a request for reconsideration of this patent term adjustment calculation. The patentee must also include the information required by 37 CFR 1.705(b)(2) and the fee required by 37 CFR 1.18(e). If patentee does not file a timely request for reconsideration of this patent term adjustment calculation including the information required by 37 CFR 1.705(b)(2) and the fee required by 37 CFR 1.18(e), the USPTO will issue a certificate of correction reflecting the PTA determination noted above.

Patentee should be aware that in order to preserve the right to review in the United States District Court for the District of Columbia of the USPTO patent term adjustment determination, patentee must ensure that he or she also take the steps required under 35 U.S.C. 154(b)(4)(A) in a timely manner. Nothing in the request for recalculation should be construed as providing an alternative time frame for commencing a civil action under 35 U.S.C. 154(b)(4)(A).

Any questions concerning this decision should be directed to the Office of Patent Legal Administration at 571-272-7702.

UNITED STATES PATENT AND TRADEMARK OFFICE

Commissioner for Patents
United States Patent and Trademark Office
P.O. Box 1450
Alexandria, VA 22313-1450
www.uspto.gov

In re Patent No. 6857552
Issue Date: February 22,2005
Application No. 10414768
Filed: April 17,2003
Attorney Docket No. CMW/03

:
:DECISION GRANTING PETITION
:UNDER 37 CFR 1.378(c)
:

This is a decision on the electronic petition, filed October 29,2009 ,under 37 CFR 1.378(c) to accept the unintentionally delayed payment of the 3.5 year maintenance fee for the above-identified patent.

The petition is **GRANTED**.

The maintenance fee is accepted, and the above-identified patent reinstated as of October 29,2009 .
This decision also constitutes notice that the fee has been accepted. An electronic copy of the petition and this decision has been created as an entry in the Image File Wrapper. Nevertheless, petitioner should print and retain an independent copy.

Telephone inquiries related to this electronic decision should be directed to the Electronic Business Center at 1-866-217-9197.

PTO/SB/66 (03-09)
Approved for use through 03/31/2012. OMB 0651-0016
U.S. Patent and Trademark Office: U.S. DEPARTMENT OF COMMERCE
Under the Paperwork Reduction Act of 1995, no persons are required to respond to a collection of information unless it displays valid OMB control number.

PETITION TO ACCEPT UNINTENTIONALLY DELAYED PAYMENT OF MAINTENANCE FEE IN AN EXPIRED PATENT (37 CFR 1.378(c))

Patent Number	Issue Date (YYYY-MM-DD)	Application Number	Filing Date (YYYY-MM-DD)	Docket Number (if applicable)
6857552	2005-02-22	10414768	2003-04-17	550/9-2735

CAUTION: Maintenance fee (and surcharge, if any) payment must correctly identify: (1) the patent number and (2) the application number of the actual U.S. application leading to issuance of that patent to ensure the fee(s) is/are associated with the correct patent. 37 CFR 1.366(c) and (d).

SMALL ENTITY
☐ Patentee claims, or has previously claimed, small entity status. See 37 CFR 1.27.

LOSS OF ENTITLEMENT TO SMALL ENTITY STATUS
☐ Patentee is no longer entitled to small entity status. See 37 CFR 1.27(g)

NOT Small Entity		Small Entity	
Fee	Code	Fee	Code
◉ 3 ½ year	(1551)	○ 3 ½ year	(2551)
○ 7 ½ year	(1552)	○ 7 ½ year	(2552)
○ 11 ½ year	(1553)	○ 11 ½ year	(2553)

SURCHARGE
The surcharge required by 37 CFR 1.20(i)(2) (Fee Code 1558) must be paid as a condition of accepting unintentionally delayed payment of the maintenance fee.

MAINTENANCE FEE (37 CFR 1.20(e)-(g))
The appropriate maintenance fee must be submitted with this petition.

STATEMENT
THE UNDERSIGNED CERTIFIES THAT THE DELAY IN PAYMENT OF THE MAINTENANCE FEE TO THIS PATENT WAS UNINTENTIONAL

PETITIONER(S) REQUEST THAT THE DELAYED PAYMENT OF THE MAINTENANCE FEE BE ACCEPTED AND THE PATENT REINSTATED

THIS PORTION MUST BE COMPLETED BY THE SIGNATORY OR SIGNATORIES

37 CFR 1.378(d) states: "Any petition under this section must be signed by an attorney or agent registered to practice before the Patent and Trademark Office, or by the patentee, the assignee, or other party in interest."

I certify, in accordance with 37 CFR 1.4(d)(4) that I am

◉ An attorney or agent registered to practice before the Patent and Trademark Office

○ A sole patentee

○ A joint patentee; I certify that I am authorized to sign this submission on behalf of all the other patentees.

○ A joint patentee; all of whom are signing this e-petition

○ The assignee of record of the entire interest

Patent Practitioner			
A signature of the applicant or representative is required in accordance with 37 CFR 1.33 and 10.18. Please see 37 CFR 1.4(d) for the form of the signature			
Signature	/WJS/	Date (YYYY-MM-DD)	2009-10-29
Name	William J. Sapone	Registration Number	32518

This collection of information is required by 37 CFR 1.378(c). The information is required to obtain or retain a benefit by the public which is to file (and by the USPTO to process) an application. Confidentiality is governed by 35 U.S.C. 122 and 37 CFR 1.11 and 1.14. This collection is estimated to take 1 hour to complete, including gathering, preparing, and submitting the completed application form to the USPTO. Time will vary depending upon the individual case. Any comments on the amount of time you require to complete this form and/ or suggestions for reducing this burden, should be sent to the Chief Information Officer, U.S. Patent and Trademark Office, U.S. Department of Commerce, P.O. Box 1450, Alexandria, VA 22313-1450. DO NOT SEND FEES OR COMPLETED FORMS TO THIS ADDRESS. **This form can only be used when in conjunction with EFS-Web. If this form is mailed to the USPTO, it may cause delays in reinstating the patent.**

Privacy Act Statement

The Privacy Act of 1974 (P.L. 93-579) requires that you be given certain information in connection with your submission of the attached form related to a patent application or patent. Accordingly, pursuant to the requirements of the Act, please be advised that: (1) the general authority for the collection of this information is 35 U.S.C. 2(b)(2); (2) furnishing of the information solicited is voluntary; and (3) the principal purpose for which the information is used by the U.S. Patent and Trademark Office is to process and/or examine your submission related to a patent application or patent. If you do not furnish the requested information, the U.S. Patent and Trademark Office may not be able to process and/or examine your submission, which may result in termination of proceedings or abandonment of the application or expiration of the patent.

The information provided by you in this form will be subject to the following routine uses:

1. The information on this form will be treated confidentially to the extent allowed under the Freedom of Information Act (5 U.S.C. 552) and the Privacy Act (5 U.S.C. 552a). Records from this system of records may be disclosed to the Department of Justice to determine whether the Freedom of Information Act requires disclosure of these records.

2. A record from this system of records may be disclosed, as a routine use, in the course of presenting evidence to a court, magistrate, or administrative tribunal, including disclosures to opposing counsel in the course of settlement negotiations.

3. A record in this system of records may be disclosed, as a routine use, to a Member of Congress submitting a request involving an individual, to whom the record pertains, when the individual has requested assistance from the Member with respect to the subject matter of the record.

4. A record in this system of records may be disclosed, as a routine use, to a contractor of the Agency having need for the information in order to perform a contract. Recipients of information shall be required to comply with the requirements of the Privacy Act of 1974, as amended, pursuant to 5 U.S.C. 552a(m).

5. A record related to an International Application filed under the Patent Cooperation Treaty in this system of records may be disclosed, as a routine use, to the International Bureau of the World Intellectual Property Organization, pursuant to the Patent Cooperation Treaty.

6. A record in this system of records may be disclosed, as a routine use, to another federal agency for purposes of National Security review (35 U.S.C. 181) and for review pursuant to the Atomic Energy Act (42 U.S.C. 218(c)).

7. A record from this system of records may be disclosed, as a routine use, to the Administrator, General Services, or his/her designee, during an inspection of records conducted by GSA as part of that agency's responsibility to recommend improvements in records management practices and programs, under authority of 44 U.S.C. 2904 and 2906. Such disclosure shall be made in accordance with the GSA regulations governing inspection of records for this purpose, and any other relevant (i.e., GSA or Commerce) directive. Such disclosure shall not be used to make determinations about individuals.

8. A record from this system of records may be disclosed, as a routine use, to the public after either publication of the application pursuant to 35 U.S.C. 122(b) or issuance of a patent pursuant to 35 U.S.C. 151. Further, a record may be disclosed, subject to the limitations of 37 CFR 1.14, as a routine use, to the public if the record was filed in an application which became abandoned or in which the proceedings were terminated and which application is referenced by either a published application, an application open to public inspections or an issued patent.

9. A record from this system of records may be disclosed, as a routine use, to a Federal, State, or local law enforcement agency, if the USPTO becomes aware of a violation or potential violation of law or regulation.

UNITED STATES PATENT AND TRADEMARK OFFICE

Commissioner for Patents
United States Patent and Trademark Office
P.O. Box 1450
Alexandria, VA 22313-1450
www.uspto.gov

JOSEPH J. BANGO
CONN. ANALYTICAL CORP.
696 AMITY ROAD
BETHANY CT 06524

In re Application of	:
Bango et al.	:
Serial No.: 10/414,796	: PETITION TO MAKE SPECIAL
Filed: April 16, 2003	:
Attorney Docket No.: 7118	:

This is in response to applicants' petition filed April 16, 2003, to make the above-identified application special under the provisions of 37 CFR 1.102(c), based on the age of the applicant. No fee is required for this petition. The delay in acting upon this petition is regretted.

Applicant has satisfied the provisions set forth in M.P.E.P. 708.02, IV. Therefore, the petition is **GRANTED**.

The application will be forwarded to the examiner for action on the merits commensurate with this decision.

Should there be any questions with regard to this letter please contact Marianne C. Seidel by letter addressed to the Director, Technology Center 1600, PO BOX 1450, ALEXANDRIA, VA 22313-1450, or by telephone at 571-272-0584 or by facsimile transmission to the general Office facsimile number.

Marianne C. Seidel
Special Program Examiner
Technology Center 1600

UNITED STATES PATENT AND TRADEMARK OFFICE

Commissioner for Patents
United States Patent and Trademark Office
P.O. Box 1450
Alexandria, VA 22313-1450
www.uspto.gov

IRVING N. FEIT, ESQ.
HOFFMANN & BARON, LLP
6900 JERICHO TURNPIKE
SYOSSET, NY 11791

COPY MAILED

SEP 25 2006

OFFICE OF PETITIONS

In re Patent No. 7,008,631	:	
Issue Date: March 7, 2006	:	
Application No. 10/414,808	:	NOTICE
Filed: April 16, 2003	:	
Attorney Docket No. 512-71	:	

This is a notice regarding your request for acceptance of a fee deficiency submission under 37 CFR 1.28. On September 1, 1998, the Court of Appeals for the Federal Circuit held that 37 CFR 1.28(c) is the sole provision governing the time for correction of the erroneous payment of the issue fee as a small entity. **See DH Technology v. Synergystex International, Inc. 154 F.3d 1333, 47 USPQ2d 1865 (Fed. Cir. Sept. 1, 1998).**

The Office no longer investigates or rejects original or reissue applications under 37 CFR 1.56. **1098 Off. Gaz. Pat. Office 502 (January 3, 1989)**. Therefore, nothing in this Notice is intended to imply that an investigation was done.

Your fee deficiency submission under 37 CFR 1.28 is hereby **ACCEPTED**.

This application is no longer entitled to small entity status. Accordingly, all future fees paid in this application must be paid at the large entity rate.

Liana Chase
Petitions Examiner
Office of Petitions

UNITED STATES PATENT AND TRADEMARK OFFICE

Commissioner for Patents
United States Patent and Trademark Office
P.O. Box 1450
Alexandria, VA 22313-1450
www.uspto.gov

Law Office of Richard A. Dunning, Jr.
343 Soquel Avenue
Suite 311
Santa Cruz, CA 95062

MAILED

DEC 0 6 2004

Technology Center 2100

In re Application of:
Michael E. SMEDBERG, et al.
Application No. 10/414,813
Filed: April 16, 2003
For: WEB SERVER HIT MULTIPLIER AND REDIRECTOR

DECISION ON REQUEST TO WITHDRAW AS ATTORNEY OR AGENT

This is a decision on the Request to Withdraw from Representation filed November 3, 2004.

A grantable request to withdraw as attorney of record should indicate thereon the present mailing addresses of the attorney(s) who is/are withdrawing from the record and of the applicant. The request for withdrawal must be signed by every attorney seeking to withdraw or contain a clear indication that one attorney is signing on behalf of another/others. A request to withdraw will not be approved unless at least 30 (thirty) days would remain between the date of approval and the later of the expiration date of a time to file a response or the expiration date of the maximum time period which can be extended under 37 C.F.R. § 1.136(a). The effective date of withdrawal being the date of decision and not the date of request. See M.P.E.P. § 402.06. 37 C.F.R. § 1.36 further requires that the applicant or patent owner be notified of the withdrawal of the attorney or agent.

The request is **GRANTED**.

All future communications from the Office will be directed to the below-listed address until otherwise notified by applicant. This correspondence address is provided by the withdrawn attorney(s). Applicant is reminded of the obligation to promptly notify the Patent and Trademark Office (Office) of any change in correspondence address to ensure receipt of all communications from the Office.

For Vincent N. Trans
Special Program Examiner
Technology Center 2100
Computer Architecture, Software, and
Information Security
571-272-3613

cc: Gray Cary Ware & Freidenrich
153 Townsend Street, Suite 800
San Francisco, CA 94107-1907

UNITED STATES PATENT AND TRADEMARK OFFICE

Commissioner for Patents
United States Patent and Trademark Office
P.O. Box 1450
Alexandria, VA 22313-1450
www.uspto.gov

PATENT DEPT
INTUITIVE SURGICAL, INC
1266 KIFER RD
BUILDING 101
SUNNYVALE CA 94086

COPY MAILED

MAY 03 2007

OFFICE OF PETITIONS

In re Application of	:
Philip S. GREEN	:
Application No. 10/414,814	: DECISION ON PETITION
Filed: April 15, 2003	: UNDER 37 CFR 1.78(a)(3)
Attorney Docket No. 00287S-003350US	:

This is a decision on the renewed petition under 37 CFR 1.78(a)(3), filed February 14, 2007, to accept an unintentionally delayed claim under 35 U.S.C. § 120 for the benefit of priority to the prior-filed nonprovisional applications set forth in the amendment filed with the petition.

The petition is **GRANTED**.

A petition for acceptance of a claim for late priority under 37 CFR 1.78(a)(3) is only applicable to those applications filed on or after November 29, 2000. Further, the petition is appropriate only after the expiration of the period specified in 37 CFR 1.78(a)(2)(ii). In addition, the petition under 37 CFR 1.78(a)(3) must be accompanied by:

(1) the reference required by 35 U.S.C. § 120 and 37 CFR 1.78(a)(2)(i) of the prior-filed application, unless previously submitted;
(2) the surcharge set forth in § 1.17(t); and
(3) a statement that the entire delay between the date the claim was due under 37 CFR 1.78(a)(2)(ii) and the date the claim was filed was unintentional. The Commissioner may require additional information where there is a question whether the delay was unintentional.

All the above requirements having been satisfied, the late claim for priority under 35 U.S.C. § 120 is accepted as being unintentionally delayed.

The granting of the petition to accept the delayed benefit claim to the prior-filed applications under 37 CFR 1.78(a)(3) should not be construed as meaning that this application is entitled to the benefit of the prior-filed applications. In order for this application to be entitled to the

benefit of the prior-filed applications, all other requirements under 35 U.S.C. § 120 and 37 CFR 1.78(a)(1) and (a)(2) must be met. Similarly, the fact that the corrected Filing Receipt accompanying this decision on petition includes the prior-filed applications should not be construed as meaning that applicant is entitled to the claim for benefit of priority to the prior-filed applications noted thereon. Accordingly, the examiner will, in due course, consider this benefit claim and determine whether the application is entitled to the benefit of the earlier filing date.

Petitioner states in the priority claim that U.S. Patent Application Serial No. 08/709,930 is a continuation of U.S. Patent application Serial No. 07/823,932. Accordingly, it is presumed that U.S. Patent Application Serial No. 08/709,930 is identical to U.S. Patent application Serial No. 07/823,932. Should this presumption be in error petitioner is required to notify the Office of Petitions in writing.

A corrected Filing Receipt, which includes the priority claim to the prior-filed nonprovisional applications, accompanies this decision on petition.

Any inquiries concerning this decision may be directed to the undersigned at (571) 272-7099. All other inquiries concerning either the examination procedures or status of the application should be directed to the Technology Center.

This application is being forwarded to Technology Center Art Unit 2624 for appropriate action on the amendment filed February 14, 2007, including consideration by the examiner of applicant's entitlement to claim benefit of priority under 35 U.S.C. § 120 to the prior-filed applications.

David Bucci
Petitions Examiner
Office of Petitions

ATTACHMENT: Corrected Filing Receipt

UNITED STATES PATENT AND TRADEMARK OFFICE

UNITED STATES DEPARTMENT OF COMMERCE
United States Patent and Trademark Office
Address: COMMISSIONER FOR PATENTS
P.O. Box 1450
Alexandria, Virginia 22313-1450
www.uspto.gov

APPL NO.	FILING OR 371(c) DATE	ART UNIT	FIL FEE REC'D	ATTY.DOCKET NO	TOT CLMS	IND CLMS
10/414,814	04/15/2003	2624	440	00287S-003350US	12	2

CONFIRMATION NO. 5215

CORRECTED FILING RECEIPT

OC000000023659351

51947
PATENT DEPT
INTUITIVE SURGICAL, INC
1266 KIFER RD
BUILDING 101
SUNNYVALE, CA 94086

Date Mailed: 05/03/2007

Receipt is acknowledged of this regular Patent Application. It will be considered in its order and you will be notified as to the results of the examination. Be sure to provide the U.S. APPLICATION NUMBER, FILING DATE, NAME OF APPLICANT, and TITLE OF INVENTION when inquiring about this application. Fees transmitted by check or draft are subject to collection. Please verify the accuracy of the data presented on this receipt. **If an error is noted on this Filing Receipt, please mail to the Commissioner for Patents P.O. Box 1450 Alexandria Va 22313-1450. Please provide a copy of this Filing Receipt with the changes noted thereon. If you received a "Notice to File Missing Parts" for this application, please submit any corrections to this Filing Receipt with your reply to the Notice. When the USPTO processes the reply to the Notice, the USPTO will generate another Filing Receipt incorporating the requested corrections (if appropriate).**

Applicant(s)

Philip S. Green, Redwood City, CA;

Assignment For Published Patent Application

SRI International, Inc., Menlo Park, CA

Power of Attorney: The patent practitioners associated with Customer Number **51947**.

Domestic Priority data as claimed by applicant

This application is a CON of 09/813,506 03/21/2001 PAT 6,574,355
which is a CON of 09/174,051 10/15/1998 PAT 6,259,806
which is a CON of 08/783,644 01/14/1997 PAT 5,859,934
which is a CON of 08/239,086 05/05/1994 PAT 5,631,973
This application 10/414,814
is a CIP of 08/709,930 09/09/1996 PAT 6,963,792
which is a CON of 07/823,932 01/21/1992 ABN

Foreign Applications

JAPAN 234198/1995 09/12/1995

If Required, Foreign Filing License Granted: 07/03/2003

The country code and number of your priority application, to be used for filing abroad under the Paris

Convention, is US10/414,814

Projected Publication Date: Not Applicable

Non-Publication Request: No

Early Publication Request: No

**** SMALL ENTITY ****

Title

Method and apparatus for transforming coordinate systems in a telemanipulation system

Preliminary Class

382

PROTECTING YOUR INVENTION OUTSIDE THE UNITED STATES

Since the rights granted by a U.S. patent extend only throughout the territory of the United States and have no effect in a foreign country, an inventor who wishes patent protection in another country must apply for a patent in a specific country or in regional patent offices. Applicants may wish to consider the filing of an international application under the Patent Cooperation Treaty (PCT). An international (PCT) application generally has the same effect as a regular national patent application in each PCT-member country. The PCT process **simplifies** the filing of patent applications on the same invention in member countries, but **does not result** in a grant of "an international patent" and does not eliminate the need of applicants to file additional documents and fees in countries where patent protection is desired.

Almost every country has its own patent law, and a person desiring a patent in a particular country must make an application for patent in that country in accordance with its particular laws. Since the laws of many countries differ in various respects from the patent law of the United States, applicants are advised to seek guidance from specific foreign countries to ensure that patent rights are not lost prematurely.

Applicants also are advised that in the case of inventions made in the United States, the Director of the USPTO must issue a license before applicants can apply for a patent in a foreign country. The filing of a U.S. patent application serves as a request for a foreign filing license. The application's filing receipt contains further information and guidance as to the status of applicant's license for foreign filing.

Applicants may wish to consult the USPTO booklet, "General Information Concerning Patents" (specifically, the section entitled "Treaties and Foreign Patents") for more information on timeframes and deadlines for filing foreign patent applications. The guide is available either by contacting the USPTO Contact Center at 800-786-9199, or it can be viewed on the USPTO website at http://www.uspto.gov/web/offices/pac/doc/general/index.html.

For information on preventing theft of your intellectual property (patents, trademarks and copyrights), you may wish to consult the U.S. Government website, http://www.stopfakes.gov. Part of a Department of Commerce initiative, this website includes self-help "toolkits" giving innovators guidance on how to protect intellectual property in specific countries such as China, Korea and Mexico. For questions regarding patent enforcement issues, applicants may call the U.S. Government hotline at 1-866-999-HALT (1-866-999-4158).

LICENSE FOR FOREIGN FILING UNDER
Title 35, United States Code, Section 184
Title 37, Code of Federal Regulations, 5.11 & 5.15

GRANTED

The applicant has been granted a license under 35 U.S.C. 184, if the phrase "IF REQUIRED, FOREIGN FILING LICENSE GRANTED" followed by a date appears on this form. Such licenses are issued in all applications where the conditions for issuance of a license have been met, regardless of whether or not a license may be required as set forth in 37 CFR 5.15. The scope and limitations of this license are set forth in 37 CFR 5.15(a) unless an earlier license has been issued under 37 CFR 5.15(b). The license is subject to revocation upon written notification. The date indicated is the effective date of the license, unless an earlier license of similar scope has been granted under 37 CFR 5.13 or 5.14.

This license is to be retained by the licensee and may be used at any time on or after the effective date thereof unless it is revoked. This license is automatically transferred to any related applications(s) filed under 37 CFR 1.53(d). This license is not retroactive.

The grant of a license does not in any way lessen the responsibility of a licensee for the security of the subject matter as imposed by any Government contract or the provisions of existing laws relating to espionage and the national security or the export of technical data. Licensees should apprise themselves of current regulations especially with respect to certain countries, of other agencies, particularly the Office of Defense Trade Controls, Department of State (with respect to Arms, Munitions and Implements of War (22 CFR 121-128)); the Bureau of Industry and Security, Department of Commerce (15 CFR parts 730-774); the Office of Foreign Assets Control, Department of Treasury (31 CFR Parts 500+) and the Department of Energy.

NOT GRANTED

No license under 35 U.S.C. 184 has been granted at this time, if the phrase "IF REQUIRED, FOREIGN FILING LICENSE GRANTED" DOES NOT appear on this form. Applicant may still petition for a license under 37 CFR 5.12, if a license is desired before the expiration of 6 months from the filing date of the application. If 6 months has lapsed from the filing date of this application and the licensee has not received any indication of a secrecy order under 35 U.S.C. 181, the licensee may foreign file the application pursuant to 37 CFR 5.15(b).

UNITED STATES PATENT AND TRADEMARK OFFICE

Commissioner for Patents
United States Patent and Trademark Office
P.O. Box 1450
Alexandria, VA 22313-1450
www.uspto.gov

MARK D. BARRISH
TOWNSEND AND TOWNSEND AND CREW, LLP
TWO ENBARCADERO CENTER
EIGHTH FLOOR
SAN FRANCISCO, CA 94111-3834

MAILED

MAY 07 2009

OFFICE OF PETITIONS

In re Application of	:	
Philip S. Green	:	DECISION ON PETITION
Application No. 10/414,814	:	TO WITHDRAW
Filed: April 15, 2003	:	FROM RECORD
Attorney Docket No. 00287S-003350US	:	

This is a decision on the Request to Withdraw as attorney or agent of record under 37 C.F.R. § 1.36(b), filed June 26, 2006.

The request is **NOT APPROVED** because it is moot.

A review of the file record indicates that on August 1, 2006 the power of attorney to Townsend and Townsend and Crew, LLP was revoked by the assignee of the patent application. Accordingly, the request to withdraw under 37 C.F.R. § 1.36(b) is moot.

All future communications from the Office will be directed to the below-listed address until otherwise notified by applicant.

Telephone inquires concerning this decision should be directed to the undersigned at 571-272- 7751. All other inquires concerning either the examination or status of the application should be directed to the Technology Center.

Joan Olszewski

Joan Olszewski
Petitions Examiner
Office of Petitions

cc: Patent Dept
Intuitive Surgical, Inc
1266 Kifer Rd
Building 101
Sunnyvale CA 94086

UNITED STATES PATENT AND TRADEMARK OFFICE

COMMISSIONER FOR PATENTS
UNITED STATES PATENT AND TRADEMARK OFFICE
P.O. BOX 1450
ALEXANDRIA, VA 22313-1450
www.uspto.gov
DIW Aug-05

BEYER WEAVER & THOMAS LLP
P.O. BOX 70250
OAKLAND CA 94612-0250

COPY MAILED
AUG 0 5 2005
OFFICE OF PETITIONS

In re Application of	:	
Roever et al.	:	DECISION ON PETITION
Application No. 10/414,817	:	
Filed: 15 April, 2003	:	
Atty Docket No. NAV1P004X1	:	

This is a decision on the petition, filed on 28 June, 2005, under 37 CFR 1.137(f) which is treated as a petition to revive the above-identified nonprovisional application under the unintentional provisions of 37 CFR 1.137(b).

The petition is **GRANTED**.

Petitioner states that the present nonprovisional application is the subject of a foreign or international application filed on 15 May, 2003. However, the U.S. Patent and Trademark Office was unintentionally not notified of this filing within 45 days subsequent to the filing of the subject application in a foreign country.

In view of the above, this application became abandoned pursuant to 35 U.S.C. § 122(b)(2)(B)(iii) and 37 CFR 1.213(c) for failure to timely notify the Office of the filing of an application in a foreign country, or under a multilateral international agreement, that requires publication of applications 18 months after filing.

A petition under 37 CFR 1.137(f) must be accompanied by:

(1) the reply which is met by the notification of such filing in a foreign country or under a multinational treaty;

(2) the petition fee as set forth in 37 CFR 1.17(m); and

(3) a statement that the entire delay in filing the required reply from the due date of the reply until the filing of a grantable petition was unintentional.

The present petition has been found to be in compliance with 37 CFR 1.137(f). Accordingly, the failure to timely notify the Office of a foreign or international filing within 45 days after the date of filing of such foreign or international application as provided by 35 U.S.C. § 122(b)(2)(B)(i) has been rescinded.

A Communication Regarding Rescission of Nonpublication Request and/or Notice of Foreign Filing, which sets forth the projected publication date of 10 November, 2005, is enclosed herewith.

The application is being referred to Technology Center Art Unit 3625 for examination in due course.

Any inquiries concerning this decision may be directed to the undersigned at 571.272.3231.

Douglas I. Wood
Senior Petitions Attorney
Office of Petitions

Encl: Communication Regarding Rescission of Nonpublication Request and/or Notice of Foreign Filing

UNITED STATES PATENT AND TRADEMARK OFFICE

COMMISSIONER FOR PATENTS
UNITED STATES PATENT AND TRADEMARK OFFICE
P.O. BOX 1450
ALEXANDRIA, VA 22313-1450
www.uspto.gov

MADSON & AUSTIN
GATEWAY TOWER WEST
SUITE 900
15 WEST SOUTH TEMPLE
SALT LAKE CITY, UT 84101

COPY MAILED

JUL 26 2007

OFFICE OF PETITIONS

In re Application of	:	
SPRANSY et al	:	
Application No.: 10/414,821	:	DECISION ON PETITION
Filing Date: April 16, 2003	:	UNDER 37 CFR 1.137(B)
Attorney Docket No.: 3339.2.2	:	

This is a decision on the petition under 37 CFR 1.137(b), filed February 23, 2007, to revive the above-identified application.

The petition is **GRANTED.**

The above-identified application became abandoned for failure to submit the issue fee in a timely manner in reply to the Notice of Allowance mailed November 7, 2006, which set a statutory period for reply of three (3) months. Accordingly, by operation of law, the above-identified application became abandoned on February 8, 2007.

The petition satisfies the conditions for revival pursuant to the provisions of 37 CFR 1.137(b) in that (1) the reply in the form of payment of the issue fee; (2) the petition fee; and (3) the required statement of unintentional delay have been received. Accordingly, the payment of the issue fee is accepted as having been unintentionally delayed.

This application is being referred to the Office of Publications.

Telephone inquiries concerning this decision should be directed to the undersigned at (571) 272-3303.

Bryan Lin

Bryan Lin
Legal Examiner
Office of the Deputy Commissioner
for Patent Examination Policy

UNITED STATES PATENT AND TRADEMARK OFFICE

COMMISSIONER FOR PATENTS
UNITED STATES PATENT AND TRADEMARK OFFICE
P.O. BOX 1450
ALEXANDRIA, VA 22313-1450
www.uspto.gov

Paper No. 5

RYAN KROMHOLZ & MANION, S.C.
POST OFFICE BOX 26618
MILWAUKEE, WI 53226

COPY MAILED

FEB 02 2004

OFFICE OF PETITIONS

In re Application of :
Belongia et al. :
Application No. 10/414,822 : DECISION REFUSING STATUS
Filed: April 16, 2003 : UNDER 37 CFR § 1.47(a)
Atty Docket No. 9513.18131-PROV FOR:
Title: DETACHABLE BREAKAWAY POWER :
SUPPLY SOURCE :

This is a decision on the Petition under 37 C.F.R. § 1.47(a), filed December 15, 2003.

The petition is **DISMISSED AS INAPPROPRIATE**.

Rule 47 applicant is given **TWO MONTHS** from the mailing date of this decision to reply, correcting the below-noted deficiencies. Any reply should be entitled "Request for Reconsideration of Petition Under 37 C.F.R. §1.47(a)," and should only address the deficiencies noted below, except that the reply may include an oath or declaration executed by the non-signing inventor. **Failure to respond will result in abandonment of the application.** Any extensions of time will be governed by 37 C.F.R. § 1.136(a).

The above-identified application was filed on April 16, 2003, without an executed oath or declaration. Accordingly, on June 11, 2003, applicants were mailed a "Notice to File Missing Parts of Nonprovisional Application," requiring submission of an executed oath or declaration and payment of the surcharge for late filing under § 1.16(e). This Notice set a two-month period for reply, with extensions of time obtainable under § 1.136(a).

In response, rule 47 applicants timely[1] filed the instant petition, along with payment of the petition fee and of the late surcharge.

A grantable petition under 37 C.F.R. § 1.47(a) requires: (1) proof that the non-signing inventor cannot be reached or found, after diligent effort, or refuses to sign the oath or declaration after having been presented with the application papers (specification, claims and drawings); (2) an acceptable oath or

[1] This reply was made timely by an accompanying petition (and fee) for extension of time within the fourth month.

declaration in compliance with 35 U.S.C. §§115 and 116; (3) the petition fee; and (4) a statement of the last known address of the non-signing inventor.

Moreover, as stated in MPEP 409.03(d),

> Where inability to find or reach a nonsigning inventor "after diligent effort" is the reason for filing under 37 CFR 1.47, a statement of facts should be submitted that fully describes the exact facts which are relied on to establish that a diligent effort was made. The fact that a nonsigning inventor is on vacation or out of town and is therefore temporarily unavailable to sign the declaration is not an acceptable reason for filing under 37 CFR 1.47.

Here, petitioner states that nonsigning inventor Kuo has verbally agreed to sign the Oath/Declaration but has not yet returned the signed Oath/Declaration. Further, by declaration of John Manion petitioner indicates that the basis for inventor Kuo's unavailability is that "beginning prior to 31 October 2003, he began traveling throughout Taiwan and has not yet returned to his residence to sign the Oath/Declaration." (Though traveling away from home, it is noted that the inventor resides in Taiwan).

Under the circumstances, and pursuant to MPEP 409.03(d), it cannot be concluded that petitioner has submitted adequate proof that the non-signing inventor cannot be reached or found, after diligent effort. The evidence supports a conclusion that the inventor is merely temporarily unavailable.

Further correspondence with respect to this matter should be addressed as follows:

By mail: Mail Stop Petition
Commissioner for Patents
P.O. Box 1450
Alexandria, VA 22313-1450

By FAX: (703) 872-9306
Attn: Office of Petitions
ATTN: NANCY JOHNSON

By hand: CUSTOMER SERVICE WINDOW
2011 South Clark Place
Crystal Plaza Two Lobby
Arlington, VA 22202

Telephone inquiries related to this decision may be directed to the undersigned at (703) 305-0309.

Nancy Johnson

Nancy Johnson
Senior Petitions Attorney
Office of Petitions

UNITED STATES PATENT AND TRADEMARK OFFICE

COMMISSIONER FOR PATENTS
UNITED STATES PATENT AND TRADEMARK OFFICE
P.O. BOX 1450
ALEXANDRIA, VA 22313-1450
www.uspto.gov

Paper No. 8

RYAN KROMHOLZ & MANION, S.C.
POST OFFICE BOX 26618
MILWAUKEE, WI 53226

COPY MAILED

MAR 15 2004

OFFICE OF PETITIONS

In re Application of Belongia et al. Application No. 10/414,822 Filed: April 16, 2003 Atty Docket No. 9513.18131-PROV FOR: Title: DETACHABLE BREAKAWAY POWER SUPPLY SOURCE	DECISION NOTING JOINDER OF INVENTOR AND PETITION UNDER § 1.47(a) DISMISSED AS MOOT

This is a decision on the "REQUEST FOR RENEWAL AND RECONSIDERATION OF PETITION UNDER 37 C.F.R. § 1.47(a)," filed March 8, 2004.

The petition is **DISMISSED AS MOOT**.

The above-identified application was filed on April 16, 2003, without an executed oath or declaration. In response to the "Notice to File Missing Parts of Nonprovisional Application" mailed June 11, 2003, applicants timely filed the initial petition under § 1.47(a), along with payment of the petition fee and of the late surcharge. However, the petition was dismissed as inappropriate as it indicated that non-signing inventor Kuo was only temporarily unavailable to sign the declaration (Decision mailed February 2, 2004).

On instant renewed petition, petitioner submitted a declaration executed by joint inventor Kuo. This is a proper type of reply to the decision refusing status under § 1.47(a). The declaration filed March 8, 2004, has been reviewed and found in compliance with § 1.63.

In view of the joinder of inventor Kuo, further consideration under 37 CFR 1.47(a) is not necessary and the petition is considered moot. This application does not have any Rule 1.47(a) status and no such status should appear on the file wrapper. This application need not be returned to this Office for further consideration under 37 CFR 1.47(a).

The application file is being forwarded to Technology Center Art Unit 2833 for examination in due course.

Telephone inquiries regarding this decision should be directed to the undersigned at (703) 305-0309.

Nancy Johnson
Senior Petitions Attorney
Office of Petitions

UNITED STATES PATENT AND TRADEMARK OFFICE

Commissioner for Patents
United States Patent and Trademark Office
P.O. Box 1450
Alexandria, VA 22313-1450
www.uspto.gov

BEYER WEAVER & THOMAS LLP
P.O. BOX 70250
OAKLAND CA 94612-0250

COPY MAILED

NOV 04 2005

OFFICE OF PETITIONS

In re Application of
Stefan Roever et al.
Application No. 10/414,830
Filed: April 15, 2003
Attorney Docket No. APLD-P003

: DECISION GRANTING PETITION

This is a decision on the petition, filed June 27, 2005, under 37 CFR 1.137(f) which is treated as a petition to revive the above-identified nonprovisional application under the unintentional provisions of 37 CFR 1.137(b).

The petition is **GRANTED**.

Petitioner states that the present nonprovisional application is the subject of a foreign or international application filed on May 15, 2003. However, the U.S. Patent and Trademark Office was unintentionally not notified of this filing within 45 days subsequent to the filing of the subject application in a foreign country.

In view of the above, this application became abandoned pursuant to 35 U.S.C. § 122(b)(2)(B)(iii) and 37 CFR 1.213(c) for failure to timely notify the Office of the filing of an application in a foreign country, or under a multilateral international agreement, that requires publication of applications 18 months after filing.

A petition under 37 CFR 1.137(f) must be accompanied by:

(1) the reply which is met by the notification of such filing in a foreign country or under a multinational treaty;

(2) the petition fee as set forth in 37 CFR 1.17(m); and

(3) a statement that the entire delay in filing the required reply from the due date of the reply until the filing of a grantable petition was unintentional.

The present petition has been found to be in compliance with 37 CFR 1.137(f). Accordingly, the failure to timely notify the Office of a foreign or international filing within 45 days after the date of filing of such foreign or international application as provided by 35 U.S.C. § 122(b)(2)(B)(I) has been rescinded. A projected publication date will be

assigned and will be communicated to the applicants in a separate correspondence, in due course.

The petition fee has been applied.

This matter is being referred to the Pre-Grant Publications Division for a mailing of Notice Regarding Rescission of Non-Publication Request.

Telephone inquiries related to this decision should be directed to the undersigned Petitions Attorney at (571) 272-3212.

Patricia Faison-Ball

Patricia Faison-Ball
Senior Petitions Attorney
Office of Petitions

UNITED STATES PATENT AND TRADEMARK OFFICE

Commissioner for Patents
United States Patent and Trademark Office
P.O. Box 1450
Alexandria, VA 22313-1450
www.uspto.gov

MOTOROLA, INC.
1303 EAST ALGONQUIN ROAD
IL01/3RD
SCHAUMBURG IL 60196

COPY MAILED

MAY 05 2008

OFFICE OF PETITIONS

In re Application of	:	
Perkins et al.	:	
Application No. 10/414,838	:	DECISION ON PETITION
Filed: April 16, 2003	:	
Attorney Docket No. CML00884J	:	

This is a decision on the petition under the unintentional provisions of 37 CFR 1.137(b), filed April 2, 2008, to revive the above-identified application.

The petition is **GRANTED**.

The petition satisfies the requirements of 37 CFR 1.137(b) in that petitioner has supplied (1) the reply in the form of the Issue Fee Transmittal with payment of the issue and publication fees, (2) the petition fee, and (3) a proper statement of unintentional delay.

Telephone inquiries concerning this decision should be directed to the undersigned at (571) 272-3206.

This matter is being referred to the Office of Data Management for processing into a patent.

Liana Walsh
Petitions Examiner
Office of Petitions

UNITED STATES PATENT AND TRADEMARK OFFICE

Commissioner for Patents
United States Patent and Trademark Office
P. O. Box 1450
Alexandria, VA 22313-1450
www. uspto. gov

LEXMARK INTERNATIONAL, INC.
INTELLECTUAL PROPERTY LAW DEPARTMENT
740 WEST NEW CIRCLE ROAD
BLDG. 082-1
LEXINGTON, KY 40550-0999

COPY MAILED

FEB 0 2 2009

OFFICE OF PETITIONS

In re Application of	:	
James Ray Bailey et al	:	
Application No. 10/414,854	:	ON PETITION
Filed: April 16, 2003	:	
Attorney Docket No. 2002-0647.02	:	

This is a decision on the petition under 37 CFR 1.137(b), filed April 25, 2008, to revive the above-identified application.

The petition is **GRANTED.**

The above-identified application became abandoned for failure to reply in a timely manner to the final Office action mailed July 23, 2007, which set a shortened statutory period for reply of three (3) months. No extension of time under the provisions of 37 CFR 1.136(a) were obtained. Accordingly, the above-identified application became abandoned on October 24, 2007.

Telephone inquiries concerning this decision should be directed to Irvin Dingle at (571) 272-3210.

This matter is being referred to Technology Center AU 2625 for further processing.

Irvin Dingle
Petitions Examiner
Office of Petitions

UNITED STATES PATENT AND TRADEMARK OFFICE

10-30-07

Commissioner for Patents
United States Patent and Trademark Office
P.O. Box 1450
Alexandria, VA 22313-1450
www.uspto.gov

Patent No. : 7,187,449 B2
Ser. No. : 10/414,860
Inventor(s) : Hideaki Tamiya, et. al.
Issued : March 6, 2007
Title : LIGHT-RECEIVING/EMITTING COMPOSITE UNIT, METHOD FOR MANUFACTURING THE SAME, AND DISPLACEMENT DETECTION DEVICE

Re: Request for Certificate of Correction

Consideration has been given your request for the issuance of a certificate of correction for the above-identified patent under the provisions of Rule(s) 1.322.

Assignees' names and addresses (assignment data) printed in a patent, are based *solely* on information supplied in the appropriate space for identifying the assignment data, i.e., item 3 of the Issue Fee Transmittal Form PTOL-85B. Granting of a request under 37 CFR 3.81(b) is required to correct applicant's error providing ***incorrect or erroneous*** assignment data, *before* issuance of a Certificate of Correction, under 37 CFR 1.323 *(see Manual of Patent Examining Procedures (M.P.E.P) Chp.1400, sect. 1481).* This procedure is required *at any time after the issue fee is paid*, including after issuance of the patent.

In view of the foregoing, your request, in this mater, is hereby denied.

A request to correct the Assignee under 37 CFR 3.81(b) should include:

A. **the processing fee set forth in 37 CFR 1.117(h) (currently $130);**
B. a statement that the failure to include the correct assignee name on the PTOL-85B was inadvertent; and
C. a copy of the Notice of Recordation of Assignment Document, reflecting the reel and frame number where the assignment(s) is recorded and/or reflecting proof of *the date* the assignment was submitted for recordation.

In the Request, Applicant(s) may request that the file be forwarded to Certificates of Correction Branch, for issuance of a Certificate of Correction, if the Request is granted.

Any request under 37 CFR 3.81(b) should be directed to the following address or facsimile number:

By mail: Mail Stop PETITIONS
Commissioner for Patents
Post Office Box 1450
Alexandria, VA 22313-1450

By hand: Customer Service Window
Mail Stop Petitions
Randolph Building
401 Dulany Street
Alexandria, VA 22314

By fax: (703) 872-9306
ATTN: Office of Petitions

If a fee (currently $100) was previously submitted for consideration of a Request for Certificate of Correction, under CFR 1.323, to correct assignment data, , no additional fee is required.

Eva James
For Cecelia Newman
Decisions & Certificates
of Correction Branch
(703) **308-9390 ext. 124** or (703) 308-8309

Haverstock & Owens
162 N Wolfe Road
Sunnyvale, CA 94086

ej

UNITED STATES PATENT AND TRADEMARK OFFICE

Commissioner for Patents
United States Patent and Trademark Office
P.O. Box 1450
Alexandria, VA 22313-1450
www.uspto.gov

HAVERSTOCK & OWENS LLP
162 N WOLFE ROAD
SUNNYVALE CA 94086

COPY MAILED

MAR 1 4 2008

OFFICE OF PETITIONS

ON PETITION

In re Patent No. 7,187,449 :
Issued: March 6, 2007 :
Application No. 10/414,860 :
Filed: September 4, 2002 :
Attorney Docket Number: KOIKE-00600 :

This is a decision on the petition filed December 17, 2007, under 37 CFR 3.81(b)[1], to correct the assignee's name on the front of the Patent.

The petition is **GRANTED**.

Petitioner states that the failure to include the correct name of the assignee on the Fee(s) Transmittal form PTOL-85(b) filed January 23, 2007 was inadvertent. Accordingly, petitioner requests that a certificate of correction be issued to reflect the correct name of the assignee on the front page of the Letters Patent.

37 CFR 3.81(b), effective June 25, 2004, reads:

> *After payment of the issue fee:* Any request for issuance of an application in the name of the assignee submitted after the date of payment of the issue fee, and any request for a patent to be corrected to state the name of the assignee, must state that the assignment was submitted for recordation as set forth in § 3.11 before issuance of the patent, and must include a request for a certificate of correction under § 1.323 of this chapter (accompanied by the fee set forth in § 1.20(a) and the processing fee set forth in § 1.17(i) of this chapter.

A request for a certificate of correction was filed September 4, 2007 and was dismissed in a decision mailed October 31, 2007 since the request was not accompanied by a petition under 37 CFR 3.81.

Office assignment records however, reflect that SONY MANUFACTURING SYSTEMS CORPORATION is the assignee of record. Accordingly, as the request complies with

---

[1] *See* Official Gazette of June 22, 2004

the provisions of 37 CFR 3.81(b), it would be appropriate for a certificate of correction to issue.

The petition fee in the amount of $130.00 and the fee for the certificate of correction in the amount of $100.00 have been applied.

Inquiries concerning this decision should be directed to the undersigned at (571) 272-3212. Any questions concerning the issuance of a certificate of correction should be directed to the Certificates of Correction Branch at (703) 305-8309.

This file is being referred to the Certificates of Correction Branch for issuance of a certificate of correction.

Patricia Faison-Ball

Patricia Faison-Ball
Senior Petitions Attorney
Office of Petitions

UNITED STATES PATENT AND TRADEMARK OFFICE

Commissioner for Patents
United States Patent and Trademark Office
P.O. Box 1450
Alexandria, VA 22313-1450
www.uspto.gov

COPY MAILED
NOV 0 9 2006
OFFICE OF PETITIONS

JAMES V. COSTIGAN ESQ.
HEDMAN & COSTIGAN PC
1185 AVENUE OF THE AMERICAS
NEW YORK, NY 10036

In re Patent No. 6,836,989	:	
Issue Date: January 4, 2005	:	
Application No. 10/414,861	:	DECISION ON REQUEST UNDER
Filed: April 16, 2003	:	37 CFR 1.28(c)
Attorney Docket No. 163-475	:	

This is a notice regarding your requests under 37 CFR 1.28(c), filed March 6, 2006 and May 15, 2006.

The request to accept the deficiency submission under 37 CFR 1.28 cannot be granted at this time.

The rule at 37 CFR 1.28(c)(2)(ii) requires an itemization of the total deficiency payment and must include the following information: (1) each particular type of fee that was erroneously paid as a small entity (*e.g.*, basic statutory filing fee, two-month extension of time fee, etc.), along with the current fee amount for a non-small entity; (2) the small entity fee actually paid, and when; (3) the deficiency owed amount (for each fee erroneously paid); and (4) the total deficiency payment owed, which is the sum or total of the individual deficiency owed amounts set forth in paragraph 1.28(c)(2)(ii)(C) of this section.

In view of the above, the request to accept the deficiency submission under 37 CFR 1.28(c) is not in compliance with the applicable rule.

Further correspondence with respect to this matter should be addressed as follows:

By mail: Mail Stop PETITIONS
Commissioner for Patents
Post Office Box 1450
Alexandria, VA 22313-1450

By hand: Customer Service Window
Mail Stop Petitions
Randolph Building
401 Dulany Street
Alexandria, VA 22314

By fax: (571) 273-8300
ATTN: Office of Petitions

Any questions concerning this matter may be directed to the undersigned at (571) 272-3218.

Frances Hicks

Frances Hicks
Petitions Examiner
Office of Petitions

UNITED STATES PATENT AND TRADEMARK OFFICE

Commissioner for Patents
United States Patent and Trademark Office
P.O. Box 1450
Alexandria, VA 22313-1450
www.uspto.gov

JAMES V. COSTIGAN ESQ.
HEDMAN & COSTIGAN PC
1185 AVENUE OF THE AMERICAS
NEW YORK, NY 10036

COPY MAILED

JUN 04 2007

OFFICE OF PETITIONS

In re Patent No. 6,836,989	:	
Issue Date: January 4, 2005	:	
Application No. 10/414,861	:	NOTICE
Filed: April 16, 2003	:	
Attorney Docket No. 163-475	:	

This is a notice regarding your renewed request for acceptance of a fee deficiency submission under 37 CFR 1.28. On September 1, 1998, the Court of Appeals for the Federal Circuit held that 37 CFR 1.28(c) is the sole provision governing the time for correction of the erroneous payment of the issue fee as a small entity. **See DH Technology v. Synergystex International, Inc. 154 F.3d 1333, 47 USPQ2d 1865 (Fed. Cir. Sept. 1, 1998).**

The Office no longer investigates or rejects original or reissue applications under 37 CFR 1.56. **1098 Off. Gaz. Pat. Office 502 (January 3, 1989).** Therefore, nothing in this Notice is intended to imply that an investigation was done.

Your fee deficiency submission under 37 CFR 1.28 is hereby **ACCEPTED**.

This patented file is no longer entitled to small entity status. Accordingly, all future fees paid in this patent must be paid at the large entity rate.

Inquiries related to this communication should be directed to the undersigned at (571) 272-3218.

Frances Hicks
Petitions Examiner
Office of Petitions

UNITED STATES PATENT AND TRADEMARK OFFICE

COMMISSIONER FOR PATENTS
UNITED STATES PATENT AND TRADEMARK OFFICE
P.O. BOX 1450
ALEXANDRIA, VA 22313-1450
www.uspto.gov

JJGJr: 10-03

Paper No: 4

JOSEPH F. LEIGHTNER, ESQ.
INTERNATIONAL FLAVORS
& FRAGRANCES INC.
521 WEST 57TH STREET
NEW YORK NY 10019

COPY MAILED

OCT 17 2003

OFFICE OF PETITIONS

In re Application of:	:	
Farbood, et al.	:	
Filed: 16 April, 2003	:	REQUEST FOR DOCUMENTATION
Application No. 10/414,873	:	
Docket No. IFF 18923-2	:	

This is a request in connection with the Petition filed on 25 August, 2003, and considered under 37 C.F.R. §1.53, to accord a filing date of 21 January, 2003, to the application deposited on that date.

Petitioner must submit the following material within one (1) month of the mail date of the instant request and no extension of time will be available under 37 C.F.R. §1.136:

- a clear copy of the receipt card accompanying the instant application as submitted (i.e., Petitioner's file copy before the receipt card was stamped by the Office);
- a clear copy of the receipt card accompanying the instant application as date-stamped by the Office.

Further correspondence with regard to this matter should be addressed as follows:

By mail: Office of Petitions
U.S. Patent and Trademark Office
P.O. Box 1450
Alexandria, VA 22313-1450

By FAX: (703) 308-6916
Attn: Office of Petitions

Application No. 10/414,873

By hand: Office of Petitions
Crystal Plaza Four, Suite CP4-3C23
2201 South Clark Place
Arlington, VA 22202

Telephone inquiries concerning this decision may be directed to the undersigned at (703)305-9199.

John J. Gillon, Jr.
Senior Attorney
Office of Petitions

UNITED STATES PATENT AND TRADEMARK OFFICE

COMMISSIONER FOR PATENTS
UNITED STATES PATENT AND TRADEMARK OFFICE
P.O. BOX 1450
ALEXANDRIA, VA 22313-1450
www.uspto.gov

JJGJr: 12-03

Paper No: 8

JOSEPH F. LEIGHTNER, ESQ.
INTERNATIONAL FLAVORS
& FRAGRANCES INC.
521 WEST 57TH STREET
NEW YORK NY 10019

COPY MAILED

DEC 16 2003

OFFICE OF PETITIONS

In re Application of:	:	
Farbood, et al.	:	
Filed: 16 April, 2003	:	DECISION ON PETITION
Application No. 10/414,873	:	
Docket No. IFF 18923-2	:	

This is a decision on the petition filed under 37 C.F.R. §1.53(b) on 18 November, 2003 (previously submitted in parts on 25 August and 29 October, 2003), seeking to have accorded a filing date of 16 April, 2003, to Fig. 3B and 3C of the application, which the Office deemed omitted at the time of filing.

For the reasons set forth below, the petition under 37 C.F.R. §1.53(b) is **GRANTED**.

This application was deposited on 16 April, 2003. On 17 July, 2003, the Office mailed a "Notice of Omitted Item(s) in a Nonprovisional Application (Filed Under 37 C.F.R. §1.53," with a statement that "a filing date has been accorded" to the application, however, "Figure(s) 3B, 3C described in the specification" appeared to have been omitted from the application.

In response, the a petition under 37 C.F.R. §1.53 was filed on 25 August, 2003, in response to which a request for additional information was mailed on 17 October, 2003, and a reply was filed on 29 October, 2003, followed by a telephone conference on 7 November and a letter memorializing the conference was mailed on 14 November, 2003.

The petition contends that, in the transmittal of the instant application:

- Petitioner sets forth (at box 5 and box 16) a statement that this application is a divisional of Application "No. 10/293 filed on November 13, 2002, which is a divisional application of U.S. Serial No. 09/573,532, filed on May 19, 2000 . . ."; and

- the incorporation-by-reference language is inserted and checked ("x") at box 5 of Petitioner's one- (1-) page application transmittal form).

Moreover, the papers apparently supplementing the original petition include a two- (2-) page photocopy containing what purports to be a copy of the Petitioner's date stamped ("04/16/03") receipt card--notably, the date stamp was on the address and not the listing side.

However, of particular note is that the receipt card, on which Petitioner originally set forth that "xx DRAWINGS 16 sheets" accompanied the application and were received by the Office, and this does not appear to have been altered by the Office.

Analysis

A search of the official file reveals that it contains, *inter alia*, of the materials deposited on 16 April, 2003, 14 sheets of drawings containing (each on a separate sheet unless otherwise noted) Figures 1-A, 1-B, 1-C, 1-D, 1-E, 1-F, 2-A, 2-B, 2-C, 2-D, 3-A, 4 and 5 (both on one sheet), 6-A, and 6-B.

Because the return postcard receipt properly itemizes the contents of the application package in accordance with MPEP §503, the Office concludes that Figure(s) 3B, 3C submitted with the specification was subsequently misplaced in the Office.

Accordingly, the petition under 37 C.F.R. §1.53 is **granted**.[1]

The Notice mailed on 17 July, 2003, hereby is withdrawn as to Figure(s) 3B, 3C submitted with the specification.

This application is being forwarded to the Office of Initial Patent Examination for further processing with a filing date of 16 April, 2003, using:

- Figures 1-A, 1-B, 1-C, 1-D, 1-E, 1-F, 2-A, 2-B, 2-C, 2-D, 3-A, 4 and 5 (both on one sheet), 6-A, and 6-B filed on 16 April, 2003; and

- Figures 3B and 3C, supplied on 25 August, 2003, with an indication on the PALM bib data sheet that 16 sheets of drawings were present on filing.

---

[1] Pursuant to Petitioner's authorization, the petition fee ($130.00) is being refunded via Treasury check.

Telephone inquiries concerning this decision may be directed to the undersigned at (703) 305-9199.

John J. Gillon, Jr.
Senior Attorney
Office of Petitions

UNITED STATES PATENT AND TRADEMARK OFFICE

COMMISSIONER FOR PATENTS
UNITED STATES PATENT AND TRADEMARK OFFICE
P.O. BOX 1450
ALEXANDRIA, VA 22313-1450
www.uspto.gov

JJGJr: 11-03

Paper No: 6

JOSEPH F. LEIGHTNER, ESQ.
INTERNATIONAL FLAVORS
& FRAGRANCES INC.
521 WEST 57TH STREET
NEW YORK NY 10019

COPY MAILED
NOV 1 4 2003
OFFICE OF PETITIONS

In re Application of:	:	
Farbood, et al.	:	
Filed: 16 April, 2003	:	CONFIRMATION OF CONFERENCE
Application No. 10/414,873	:	
Docket No. IFF 18923-2	:	

This is a confirmation of a telephone conference of 7 November, 2003, wherein Petitioner indicated that he would be filing further papers in connection with the Petition filed on 25 August, and since supplemented on 29 October, 2003, and considered under 37 C.F.R. §1.53, to accord a filing date of 21 January, 2003, to the application deposited on that date.

Petitioner also should include a copy of the Figs. 3B and 3C, which are at issue herein.

Decision will be rendered after Wednesday, 19, December, 2003, or Petitioner's submission of his supplement, whichever event is first occurring, and no extension of time will be available under 37 C.F.R. §1.136.

Further correspondence with regard to this matter should be addressed as follows:

By mail: Office of Petitions
U.S. Patent and Trademark Office
P.O. Box 1450
Alexandria, VA 22313-1450

By FAX: (703) 308-6916
Attn: Office of Petitions

By hand: Office of Petitions
Crystal Plaza Four, Suite CP4-3C23
2201 South Clark Place
Arlington, VA 22202

Telephone inquiries concerning this decision may be directed to the undersigned at (703)305-9199.

John J. Gillon, Jr.
Senior Attorney
Office of Petitions

UNITED STATES PATENT AND TRADEMARK OFFICE

Commissioner for Patents
United States Patent and Trademark Office
P.O. Box 1450
Alexandria, VA 22313-1450
www.uspto.gov

Joseph F. Leightner, Esq.
INTERNATIONAL FLAVORS & FRAGRANCES INC.
521 West 57th Street
New York NY 10019

COPY MAILED

JUN 19 2007

OFFICE OF PETITIONS

In re Application of	:	
Farbood, et al.	:	
Application No. 10/414,873	:	DECISION ON PETITION
Filed: April 16, 2003	:	
Attorney Docket No. IFF-18923-2	:	

This is a decision on the petition under the unintentional delay provisions of 37 CFR 1.137(b), filed January 22, 2007, to revive the above-identified application.

The petition is **GRANTED**.

This application became abandoned for failure to timely pay the issue and publication fees on or before December 19, 2006, as required by the Notice of Allowance and Fee(s) Due, mailed September 19, 2006. Accordingly, the date of abandonment of this application is December 20, 2006. A Notice of Abandonment was mailed on January 17, 2007.

The petition satisfies the requirements of 37 CFR 1.137(b) in that petitioner has supplied (1) the reply in the form of payment of the issue fee of $1,400.00 and the publication fee of $300.00, (2) the petition fee of $1,500.00; and (3) a proper statement of unintentional delay.

Telephone inquiries concerning this decision should be directed to the undersigned at (571) 272-3230.

This application is being referred to Publishing Division for processing into a patent.

Shirene Willis Brantley

Shirene Willis Brantley
Senior Petitions Attorney
Office of Petitions

UNITED STATES PATENT AND TRADEMARK OFFICE

Commissioner for Patents
United States Patent and Trademark Office
P.O. Box 1450
Alexandria, VA 22313-1450
www.uspto.gov

JAMES C. SCOTT, ROETZEL & ANDRESS
1375 E. 9TH STREET
10TH FLOOR
ONE CLEVELAND CENTER
CLEVELAND, OH 44114

COPY MAILED
JUN 06 2006
OFFICE OF PETITIONS

In re Application of	:	
Christine Kaprosy	:	
Application No. 10/414,875	:	DECISION ON PETITION
Filed: April 16, 2003	:	TO MAKE SPECIAL UNDER
Attorney Docket No. 109769.0010	:	37 CFR 1.102(d)
	:	

This is a decision on the petition under 37 CFR §1.102(d), filed April 5, 2006, to make the above-identified application special based on actual infringement as set forth in M.P.E.P. § 708.02, Section II.

The petition is **GRANTED.**

A grantable petition to make an application special under 37 CFR §1.102(d) and MPEP §708.02, Section II: Infringement, must be accompanied by the required fee pursuant to 37 CFR 1.17(h) and a statement by the applicant, assignee, or attorney/agent registered to practice before the office alleging:

> (A) That there is an infringing device or product actually on the market or method in use;
>
> (B) That a rigid comparison of the alleged infringing device, product, or method with the claims of the application has been made, and that, in his or her opinion, some of the claims are unquestionably infringed; and
>
> (C) That he or she has made or caused to be made a careful and thorough search of the prior art or has a good knowledge of the pertinent prior art.
>
> Applicant must provide one copy of each of the references deemed most closely related to the subject matter encompassed by the claims if said references are not already of record.

The petition complies with all the above stated requirements. Accordingly, the above-identified application has been accorded "special" status.

Telephone inquiries concerning this decision should be directed to Irvin Dingle at 571-272-3210.

All other inquiries concerning either the examination or status of the application should be directed to the Technology Center.

The application is being forwarded to the Technology Center Art Unit 2173 for action on the merits commensurate with this decision.

Amelia Au
Petitions Examiner
Office of Petitions

UNITED STATES PATENT AND TRADEMARK OFFICE

COMMISSIONER FOR PATENTS
UNITED STATES PATENT AND TRADEMARK OFFICE
P.O. BOX 1450
ALEXANDRIA, VA 22313-1450
www.uspto.gov

OCT 29 2003

MAILED

OCT 29 2003

OFFICE OF THE DIRECTOR
TC 3600

John D. Jeter
1403 Teche Drive
St. Martinville, LA 70582

Paper No. 4

In re application of
Donald E. Mosing et al.
Application No. 10/414,893
Filed: April 15, 2003
For: SLIP MANIPULATING APPARATUS

DECISION ON PETITION TO MAKE SPECIAL (APPLICANT'S AGE)

This is a decision on the petition submitted on April 15, 2003 under 37 CFR 1.102 (c) to make the above-identified application special under the accelerated examination procedure set forth in MPEP 708.02, Section IV: Applicant's Age. The delay in deciding this petition is regretted.

The petition is **GRANTED**.

An application may be accorded special status upon the filing of a petition providing evidence showing that the applicant is at least 65 years old. Such a showing may be provided by evidence such as a birth certificate or a statement from the applicant.

The evidence submitted with the petition is a statement from the applicant stating that he is at least 65 years of age.

The examiner is directed (1) to make an interference search for possible interfering applications, (2) to promptly examine this application out of turn, and (3) if any interfering application is discovered, to examine such application simultaneously and state in the first official letter of such application that it is being taken out of turn because of a possible interference.

Petitioner is advised that this application will continue to be special, throughout its entire prosecution and pendency, including interference or appeal, if any, only if petitioner makes a prompt ***bona fide*** effort, in response to each Office action, to place the application in condition for allowance, even if it is necessary to conduct an interview with the examiner to accomplish this purpose.

SUMMARY: Petition to Make Special **GRANTED**.

Steven N. Meyers
Special Programs Examiner
Technology Center 3600
(703) 308-3868

SNM/cps 10/27/03

UNITED STATES PATENT AND TRADEMARK OFFICE

Commissioner for Patents
United States Patent and Trademark Office
P.O. Box 1450
Alexandria, VA 22313-1450
www.uspto.gov

JOHN D. JETER
1403 TECHE DRIVE
ST. MARTINVILLE, LA 70582

COPY MAILED

MAR 0 2 2005

OFFICE OF PETITIONS

In re Application of :
Donald E. Mosing, et al. :
Application No. 10/414,893 : ON PETITION
Filed: April 15, 2003 :
Attorney Docket No. 519 :

This is a decision on the petition under 37 CFR 1.137(b), filed December 20, 2004, to revive the above-identified application.

The petition is **DISMISSED**.

Any request for reconsideration of this decision must be submitted within TWO (2) MONTHS from the mail date of this decision. Extensions of time under 37 CFR 1.136(a) are permitted. The reconsideration request should include a cover letter entitled "**Renewed Petition under 37 CFR 1.137(b).**" This is **not** a final agency action within the meaning of 5 U.S.C. § 704.

Petitioner is advised that as of December 8, 2004, the Petition fee for revival of an application for patent abandoned unintentionally under 37 CFR 1.137(b) is $1,500 for a large entity. Petitioner remitted $1,370 for the petition fee on December 20, 2004; therefore, the deficiency of $130 is due. Petitioner is also advised that as of December 8, 2004, the issue fee payment increased to $1,400. Petitioner remitted $1,370 for the issue fee; therefore, the fee deficiency of $30 is due upon the filing of the "renewed petition."

The file does not indicate a change of address has been submitted, although the address given on the petition differs from the address of record. If appropriate, a change of address should be filed in accordance with MPEP 601.03. A courtesy copy of this decision is being mailed to the address given on the petition; however, the Office will mail future correspondence solely to the address of record.

Further correspondence with respect to this matter should be addressed as follows:

By mail: Mail Stop PETITIONS
Commissioner for Patents
Post Office Box 1450
Alexandria, VA 22313-1450

By hand: Customer Window located at:

Customer Service Window, Mail Stop Petitions
Randolph Building
401 Dulany Street
Alexandria, VA 22314

By fax: (703) 872-9306
ATTN: Office of Petitions

Telephone inquiries concerning this decision should be directed to the undersigned at (571) 272-3229.

Retta Williams

Retta Williams
Petitions Examiner
Office of Petitions
Office of the Deputy Commissioner
for Patent Examination Policy

cc: JOHN D. JETER
P.O. BOX 846
SAINT MARTINVILLE, LA 70582

UNITED STATES PATENT AND TRADEMARK OFFICE

Commissioner for Patents
United States Patent and Trademark Office
P.O. Box 1450
Alexandria, VA 22313-1450
www.uspto.gov

JOHN D. JETER
P. O. BOX 846
ST. MARTINVILLE, LA 70582

COPY MAILED

JUN 2 7 2005

OFFICE OF PETITIONS

In re Application of :
Donald E. Mosing, et al. :
Application No. 10/414,893 :
Filed: April 15, 2003 :
Attorney Docket No. 519 :

ON PETITION

This is a decision on the renewed petition under 37 CFR 1.137(b), filed May 18, 2005, to revive the above-identified application.

The petition is **GRANTED.**

The above-identified application became abandoned for failure to submit the issue fee in a timely manner in reply to the Notice of Allowance mailed June 28, 2004, which set a statutory period for reply of three (3) months. Accordingly, the above-identified application became abandoned on September 29, 2004.

The Change of Correspondence Address has been previously accepted and recorded.

The petition satisfies the conditions for revival pursuant to the provisions of 37 CFR 1.137(b) in that (1) the reply in the form of payment of the issue fee; (2) the petition fee; and (3) the required statement of unintentional delay have been received. Accordingly, the issue fee is accepted as having been unintentionally delayed.

Telephone inquiries concerning this decision should be directed to the undersigned at (571) 272-3229.

This application matter is being forwarded to the Publishing Division for further processing.

Retta Williams

Retta Williams
Petitions Examiner
Office of Petitions
Office of the Deputy Commissioner
for Patent Examination Policy

UNITED STATES PATENT AND TRADEMARK OFFICE

COMMISSIONER FOR PATENTS
UNITED STATES PATENT AND TRADEMARK OFFICE
P.O. BOX 1450
ALEXANDRIA, VA 22313-1450
www.uspto.gov

ROCKWELL COLLINS, INC.
INTELLECTUAL PROPERTY DEPARTMENT
400 COLLINS ROAD NE
M/S 124-323
CEDAR RAPIDS, IA 52498

COPY MAILED
SEP 19 2008

In re Application of	:	
Carlos J. Chavez, et al.	:	
Application No. 10/414,931	:	ON PETITION
Filed: April 16, 2003	:	
Attorney Docket No. 02CR058/KE	:	
	:	

This is a decision on the petition under 37 CFR 1.137(b), filed May 8, 2008, to revive the above-identified application.

The petition is **GRANTED**.

The application became abandoned for failure to timely file a reply within the meaning of 37 CFR 1.113 to the final Office action mailed March 19, 2007. A Notice of Abandonment was mailed on April 21, 2008.

The proposed reply required for consideration of a petition to revive must be a Notice of Appeal (and appeal fee required by 37 CFR 41.20(b)(2), an amendment that *prima facie* places the application in condition for allowance, a Request for Continued Examination and submission (37 CFR 1.114), or the filing of a continuing application under 37 CFR 1.53(b). See MPEP 711.03(c)(II)(A)(2).

The petition satisfies the requirements of 37 CFR 1.137(b) in that petitioner has supplied (1) the reply in the form of a Request for Continued Examination (RCE), including the fee of $810 and the submission required by 37 CFR 1.114; (2) the petition fee of $1,540; and (3) an adequate statement of unintentional delay.

This application is being referred to Technology Center AU 2611 for processing of the RCE and for appropriate action by the Examiner in the normal course of business on the amendment submitted in accordance with 37 CFR 1.114.

Telephone inquiries concerning this decision should be directed to the undersigned at (571) 272-3204. Inquiries relating to further prosecution should be directed to the Technology Center.

Sherry D. Brinkley
Petitions Examiner
Office of Petitions

UNITED STATES PATENT AND TRADEMARK OFFICE

Commissioner for Patents
United States Patent and Trademark Office
P.O. Box 1450
Alexandria, VA 22313-1450
www.uspto.gov

NORRIS, McLAUGHLIN & MARCUS, P.A.
875 THIRD AVENUE, 18TH FLOOR
NEW YORK, NY 10022

COPY MAILED

AUG 10 2006

OFFICE OF PETITIONS

In re Application of
Matthias Lowel et al
Application No. 10/414,942
Filed: April 16, 2003
Attorney Docket No. 101215-133

DECISION GRANTING PETITION
UNDER 37 CFR 1.313(c)(2)

This is a decision on the petition, filed August 4, 2006, under 37 CFR 1.313(c)(2) to withdraw the above-identified application from issue after payment of the issue fee.

The petition is **GRANTED**.

The above-identified application is withdrawn from issue for consideration of a submission under 37 CFR 1.114 (request for continued examination). See 37 CFR 1.313(c)(2).

Petitioner is advised that the issue fee paid on May 1, 2006 in the above-identified application cannot be refunded. If, however, the above-identified application is again allowed, petitioner may request that it be applied towards the issue fee required by the new Notice of Allowance.[1]

Telephone inquiries should be directed to the undersigned at (571) 272-3218.

This matter is being referred to Technology Center AU 1651 for processing of the request for continued examination under 37 CFR 1.114 and for consideration of the Information Disclosure Statement.

Frances Hicks
Petitions Examiner
Office of Petitions

C:\Documents and Settings\FHicks\My Documents\470\Aug9\414942.wpd

---

[1] *The request to apply the issue fee to the new Notice may be satisfied by completing and returning the new Part B – Fee(s) Transmittal Form (along with any balance due at the time of submission), which includes the following language thereon: "The Director of the USPTO is requested to apply the Issue Fee and Publication Fee (if any) or to re-apply any previously paid issue fee in the application identified above. Petitioner is advised that, whether a fee is indicated as being due or not, the Issue Fee Transmittal Form* ***must*** *be completed and timely submitted to avoid abandonment. Note the language in bold text on the first page of the Notice of Allowance and Fee(s) Due (PTOL-85).*

UNITED STATES PATENT AND TRADEMARK OFFICE

UNITED STATES DEPARTMENT OF COMMERCE
United States Patent and Trademark Office
Address: COMMISSIONER FOR PATENTS
P.O. Box 1450
Alexandria, Virginia 22313-1450
www.uspto.gov

FINNEGAN, HENDERSON, FARABOW, GARRETT & DUNNER LLP
901 NEW YORK AVENUE, NW
WASHINGTON, DC 20001-4413

Mail Date: 04/21/2010

Applicant	: Eisaburo Itakura	: DECISION ON REQUEST FOR
Patent Number	: 7573877	: RECALCULATION of PATENT
Issue Date	: 08/11/2009	: TERM ADJUSTMENT IN VIEW
Appliction No	: 10/414,947	: OF WYETH AND NOTICE OF INTENT TO
Filed	: 04/16/2003	: ISSUE CERTIFICATE OF CORRECTION
		:

The Request for Recalculation is **GRANTED** to the extent indicated.

The patent term adjustment has been determined to be **1830** days. The USPTO will *sua sponte* issue a certificate of correction reflecting the amount of PTA days determined by the recalculation.

Prior to the issuance of the certificate of correction, the USPTO will afford patentee an opportunity to be heard and request reconsideration. Accordingly, patentee has **one month or thirty (30) days**, whichever is longer, to file a request for reconsideration of this patent term adjustment calculation. See 35 U.S.C. 154(b)(3)(B)(ii) and 37 CFR 1.322(a)(4). No extensions of time will be granted under 37 CFR 1.136.

Patentee should use document code PET.OP if electronically filing a request for reconsideration of this patent term adjustment calculation. The patentee must also include the information required by 37 CFR 1.705(b)(2) and the fee required by 37 CFR 1.18(e). If patentee does not file a timely request for reconsideration of this patent term adjustment calculation including the information required by 37 CFR 1.705(b)(2) and the fee required by 37 CFR 1.18(e), the USPTO will issue a certificate of correction reflecting the PTA determination noted above.

Patentee should be aware that in order to preserve the right to review in the United States District Court for the District of Columbia of the USPTO patent term adjustment determination, patentee must ensure that he or she also take the steps required under 35 U.S.C. 154(b)(4)(A) in a timely manner. Nothing in the request for recalculation should be construed as providing an alternative time frame for commencing a civil action under 35 U.S.C. 154(b)(4)(A).

Any questions concerning this decision should be directed to the Office of Patent Legal Administration at 571-272-7702.

UNITED STATES PATENT AND TRADEMARK OFFICE

Commissioner for Patents
United States Patent and Trademark Office
P.O. Box 1450
Alexandria, VA 22313-1450
www.uspto.gov

MAILED

APR 19 2005

Director's Office
Group 3700

In re Application of Kenneth E. Kadziauskas et al Serial No. : 10/414,950 Filed : April 15, 2003 For : Method for Controlling Fluid Flow to and from an Eye During Ophthalmic Surgery	:	DECISION ON PETITION TO WITHDRAW HOLDING OF ABANDONMENT

This is a decision on petitioner's request filed July 19, 2004, to review the holding of abandonment mailed July 12, 2004, for failure to respond to the Office action mailed December 16, 2003. There is no fee required for this request/petition.

Petitioner has submitted a copy of a response and a copy of a PTO-stamped post card receipt dated February 23, 2004, to show the timely receipt of the response. The original submission has been found and is now in the file. Any inconvenience is deeply regretted.

In view of the above, the Notice of Abandonment mailed July 12, 2004, is in error and is hereby vacated. The holding of abandonment is withdrawn. Upon the mailing of this decision, the application will be forwarded to the Examiner via the Legal Instruments Examiner for entry and consideration of the response received February 23, 2004.

Summary: Holding of Abandonment Withdrawn.

Richard A. Bertsch, Director
Technology Center 3700
Phone: (571) 272-3750

Walter A. Hackler, Ph.D.
Suite B
2372 S.E. Bristol
Newport Beach, CA 92660-0755

ak/04/18/05

UNITED STATES PATENT AND TRADEMARK OFFICE

Commissioner for Patents
United States Patent and Trademark Office
P.O. Box 1450
Alexandria, VA 22313-1450
www.uspto.gov

DAVIDSON, DAVIDSON & KAPPEL, LLC
485 SEVENTH AVENUE, 14TH FLOOR
NEW YORK, NY 10018

COPY MAILED
MAY 09 2007
OFFICE OF PETITIONS

In re Application of	:	
Paviot et al.	:	
Application No. 10/414973	:	ON PETITION
Filing or 371(c) Date: 04/16/2003	:	
Attorney Docket Number: 510.1068	:	

This is a decision on the Petition for Revival of an Application for Patent Abandoned Unintentionally Under 37 C.F.R. § 1.137(b), filed January 25, 2007.

This Petition is hereby **granted**.

The above-identified application became abandoned for failure to timely and properly reply to the Notice of Allowance and Issue Fee Due, mailed October 16, 2006. The Notice set a non-extendable three (3) month period for reply. No reply having been received, the application became abandoned on January 17, 2007. A Notice of Abandonment was mailed March 28, 2007.

Applicant has submitted the issue fee with the instant petition.

This application is being referred to Publishing Division for processing into a patent.

Telephone inquiries concerning this decision should be directed to the undersigned at (571) 272-3232.

Derek L. Woods
Attorney
Office of Petitions

UNITED STATES PATENT AND TRADEMARK OFFICE

Commissioner for Patents
United States Patent and Trademark Office
P.O. Box 1450
Alexandria, VA 22313-1450
www.uspto.gov
DW Jun-05

ST. ONGE STEWARD JOHNSTON & REENS, LLC
986 BEDFORD STREET
STAMFORD CT 06905-5619

COPY MAILED

JUN 2 8 2005

OFFICE OF PETITIONS

In re Application of	:	
Kwon et al.	:	
Application No. 10/414,977	:	DECISION ON PETITION
Filed: 16 April, 2003	:	
Atty Docket No. 03982-P0001A	:	

This is a decision on the petition filed on 12 May, 2005, under 37 CFR 1.137(b),[1] to revive the above-identified application.

The petition is **GRANTED**.

The application became abandoned on 3 May, 2005, for failure to timely submit the issue and publication fees in response to the Notice of Allowance and Fee(s) Due mailed on 2 February, 2005, which set a three (3) month statutory period for reply. The

---

[1] Effective December 1, 1997, the provisions of 37 CFR 1.137(b) now provide that where the delay in reply was unintentional, a petition may be filed to revive an abandoned application or a lapsed patent pursuant to 37 CFR 1.137(b). A grantable petition filed under the provisions of 37 CFR 1.137(b) must be accompanied by:

(1) the required reply, unless previously filed. In a nonprovisional application abandoned for failure to prosecute, the required reply may be met by the filing of a continuing application. In a nonprovisional utility or plant application filed on or after June 8, 1995, and abandoned for failure to prosecute, the required reply may also be met by the filing of a request for continuing examination in compliance with § 1.114. In an application or patent, abandoned or lapsed for failure to pay the issue fee or any portion thereof, the required reply must be the payment of the issue fee or any outstanding balance thereof.

(2) the petition fee as set forth in 37 CFR 1.17(m);

(3) a statement that the entire delay in filing the required reply from the due date for the reply until the filing of a grantable petition pursuant to 37 CFR 1.137(b) was unintentional. The Commissioner may required additional information where there is a question whether the delay was unintentional; and

(4) any terminal disclaimer (and fee as set forth in 37 CFR 1.20(d)) required pursuant to 37 CFR 1.137(c)).

filing of the present petition precedes the mailing of Notice of Abandonment.

The issue and publication fees have been received.

This application is being referred to the Publishing Division for processing into a patent.

Telephone inquiries concerning this matter may be directed to the undersigned at (571) 272-3231.

D Wood

Douglas I. Wood
Senior Petitions Attorney
Office of Petitions

UNITED STATES PATENT AND TRADEMARK OFFICE

Commissioner for Patents
United States Patent and Trademark Office
P.O. Box 1450
Alexandria, VA 22313-1450
www.uspto.gov

CHARLES H. JEW, ESQ.
CASCIO, SCHOMOYER & ZERVAS
423 BROADWAY AVE, STE 314
MILLBRAE CA 94030-1905

COPY MAILED
MAR 21 2006
OFFICE OF PETITIONS

In re Application of
James F. STAMPS, *et al.*
Application No. 10/414,979
Filed: April 16, 2003
Attorney docket No. SAND-01122US0 CHJ/JPO

ON PETITION

This is a decision on the petition under 37 CFR 1.137(b), filed on February 2, 2006, to revive the above-identified application.

The petition under 37 CFR 1.137(b) is **DISMISSED** as moot.

The application became abandoned for failure to reply in a timely manner to the non-final Office action mailed on April 6, 2005, which set a shortened statutory period for reply of three (3) months. No extensions of time under the provisions of 37 CFR 1.136(a) were obtained. Accordingly, the application became abandoned, by operation of law, on July 7, 2005. A Notice of Abandonment was mailed on November 2, 2005.

Petitioner states that the reply to the non-final Office action of April 6, 2005 was timely filed on September 23, 2005, but "[U]nfortunately, the wrong application number was used, namely: 10/267,190". As evidenced by the USPTO image file wrapper (IFW) record of the application No. 10/267,190, the response to the aforementioned non-final Office action and the $1020 extension of time fee were indeed timely submitted on September 23, 2005, but with incorrect application number.

A minor error in the identification of the application can be corrected by the Office provided the correct identification can be quickly discovered. See MPEP 502. Where the Office can determine the correct application file that the papers were actually intended for, based on identifying information in the heading of the papers (e.g., application number, filing date, title of invention and inventor(s) name(s)), the Office will transfer the papers to the correct application file for which they were intended without the need of a petition. See MPEP 724.05(III). Accordingly, the petitioner's reply of September 23, 2005 to the non-final Office action of April 6, 2005, including the request for extension of time and the $1020 extension of time fee, is being transferred from the application file No. 10/267,190 to the application file No. 10/414,979 and is being treated as timely filed. As such, the application was not abandoned in fact. There is no remedy that can be provided pursuant to 37 CFR 1.137(a), accordingly. Therefore, the

petition fee of $1500 submitted concurrently with the instant petition is unnecessary and will be credited to petitioner's deposit account No. 50-3737.

For the above stated reasons, the instant petition to revive is rendered moot by the timely filing of the required reply to the non-final Office action of April 6, 2005. The Notice of Abandonment is hereby vacated and the holding of abandonment withdrawn. The application is restored to pending status.

Furthermore, an extension of time under 37 CFR 1.136 must be filed prior to the expiration of the maximum extendable period for reply. See In re Application of S., 8 USPQ2d 1630, 1631 (Comm'r Pats. 1988). Since the $1020 extension of time fee submitted with the instant petition on February 2, 2006 was subsequent to the maximum extendable period for reply, this fee is unnecessary and will be credited to petitioner's deposit account No. 50-3737.

The application file is being referred to Technology Center AU 2838 for appropriate action on the amendment of September 23, 2005.

Telephone inquiries concerning this decision should be directed to Anatoly Vortman at (571) 272-6051, or in his absence to the undersigned at (571) 272-7099.

David Bucci
Petitions Examiner
Office of Petitions

SPE RESPONSE FOR CERTIFICATE OF CORRECTION

Paper No.:20091223

DATE : December 24, 2009

TO SPE OF : ART UNIT 3662

SUBJECT : Request for Certificate of Correction on Patent No.: 6873290

A response is requested with respect to the accompanying request for a certificate of correction.

Please complete this form and return with file, within **7** days to:
Certificates of Correction Branch - PK 3-910
Palm location **7590** - Tel. No. 305-8201

With respect to the change(s) requested, correcting Office and/or Applicant's errors, should the patent read as shown in the certificate of correction? No new matter should be introduced, nor should the scope or meaning of the claims be changed.

Thank You For Your Assistance **Certificates of Correction Branch**

The request for issuing the above-identified correction(s) is hereby:
Note your decision on the appropriate box.

☒ **Approved** **All** changes apply.

☐ **Approved in Part** Specify below which changes **do not** apply.

☐ **Denied** State the reasons for denial below.

Comments:

SPE: /Thomas H. Tarcza/ **Art Unit** 3662

UNITED STATES PATENT AND TRADEMARK OFFICE

Commissioner for Patents
United States Patent and Trademark Office
P.O. Box 1450
Alexandria, VA 22313-1450
www.uspto.gov

STEPHEN R. CHRISTIAN
BBWI
P O BOX 1625
IDAHO FALLS, ID 83415-3899

COPY MAILED

JUL 2 1 2004

OFFICE OF PETITIONS

In re Application of
Bruce M. Wilding et al
Application No. 10/414,991
Filed: April 14, 2003
Attorney Docket No. B-156D1

: DECISION GRANTING PETITION
: UNDER 37 CFR 313(c)(2)

This is a decision on the petition, filed July 16, 2004, under 37 CFR 1.313(c)(2) to withdraw the above-identified application from issue after payment of the issue fee.

The petition is **GRANTED**.

The above-identified application is withdrawn from issue for consideration of a submission under 37 CFR 1.114 (request for continued examination). See 37 CFR 1.313(c)(2).

Petitioner is advised that the issue fee paid on May 10, 2004 in the above-identified application cannot be refunded. If, however, the above-identified application is again allowed, petitioner may request that it be applied towards the issue fee required by the new Notice of Allowance.[1]

Telephone inquiries should be directed to the undersigned at (703) 305-8680.

This matter is being referred to Technology Center AU 3744 for processing of the request for continued examination under 37 CFR 1.114 and for consideration of the concurrently filed Information Disclosure Statement.

Frances Hicks
Petitions Examiner
Office of Petitions
Office of the Deputy Commissioner
for Patent Examination Policy

---

[1] The request to apply the issue fee to the new Notice may be satisfied by completing and returning the new Issue Fee Transmittal Form PTOL-85(b), which includes the following language thereon: "Commissioner for Patents is requested to apply the Issue Fee and Publication Fee (if any) or re-apply any previously paid issue fee to the application identified above." Petitioner is advised that, whether a fee is indicated as being due or not, the Issue Fee Transmittal Form **must** be completed and timely submitted to avoid abandonment. Note the language in bold text on the first page of the Notice of Allowance and Fee(s) Due (PTOL-85).

UNITED STATES PATENT AND TRADEMARK OFFICE

COMMISSIONER FOR PATENTS
UNITED STATES PATENT AND TRADEMARK OFFICE
P.O. BOX 1450
ALEXANDRIA, VA 22313-1450
www.uspto.gov

Paper No. 012104

SNELL & WILMER LLP
1920 Main Street, Suite 1200
Irvine, CA 92614

JAN 22 2004

In re Application of:
INOUE *et al.*
Serial No.: 10/414,992
Filed: April 16, 2003
Attorney Docket No.: **52478-3436**

DECISION ON PETITION
TO MAKE SPECIAL

This is a decision on the petition under 37 C.F.R. § 1.102(c), filed June 11, 2003, to make the above-identified application special under the accelerated examination procedure set forth in the Manual of Patent Examining Procedure (M.P.E.P.), § 708.02, Item VI: Energy, or, in the alternative, Item VIII: Accelerated Examination.

A grantable petition under 37 C.F.R. § 1.102(c), and in accordance with M.P.E.P. § 708.02, Item VI, for inventions which materially contribute to (A) the discovery or development of energy resources, or (B) the more efficient utilization and conservation of energy resources, must be accompanied by statements under 37 C.F.R. § 1.102 by the applicant, assignee, or an attorney/agent registered to practice before the Office explaining how the invention materially contributes to category (A) or (B) set forth above. No fee is required for this petition.

A grantable petition to make special under 37 C.F.R. § 1.102 and in accordance with M.P.E.P., Section 708.02, Item VIII, must be accompanied by (a) the fee set forth in 37 C.F.R. § 1.17(i), (b) a statement that all claims are directed a single invention or an offer to make an oral election without traverse should the Patent and Trademark Office hold that the claims are not directed to a single invention, (c) a statement that a pre-examination search has been made by the inventor, attorney, agent, professional searcher, etc., and a listing of the field of search by class and subclass, (d) one copy of each of the references deemed most closely related to the subject matter encompassed by the claims, and (e) a detailed description of the submitted references and discussions pointing out how the claimed subject matter is distinguishable over these references.

The petition is not sufficient to satisfy the requirements under Item VI. However, the petition does satisfy the above requirements under Item VIII. Accordingly, the petition is **GRANTED**.

The application is being forwarded to the examiner for expedited prosecution.

If the examiner can make this application special without prejudice to any possible interfering applications, and s/he should make a rigid search for such, s/he is authorized to do so for the next

action. Should the application be rejected, the application will not be considered special for the subsequent action unless the applicant promptly makes a bona fide effort to place the application in condition for allowance, even if it is necessary to have an interview with the examiner to accomplish this purpose.

If the examiner finds any interfering application for the same subject matter, s/he should consider such application simultaneously with this application and should state in the official letter of such application that s/he is taking it out of its turn because of possible interference.
Should an appeal be taken in this application or should this application become involved in an interference, consideration of the appeal and the interference will be expedited by all Patent and Trademark Office officials concerned, contingent likewise upon diligent prosecution by the applicant.

After allowance, this application will be given priority for printing. See M.P.E.P. § 1309.

Inquiries regarding this decision should be directed to Clayton E. LaBalle at (703) 308-0519.

Clayton E. LaBalle, Special Programs Examiner
Technology Center 2800
Semiconductors, Electrical and Optical
Systems and Components

26 FEB 2004
UNITED STATES PATENT AND TRADEMARK OFFICE

#5

COMMISSIONER FOR PATENTS
UNITED STATES PATENT AND TRADEMARK OFFICE
P.O. BOX 1450
ALEXANDRIA, VA 22313-1450
www.uspto.gov

Hogan & Hartson
IP Group Columbia Square
555 Thirteenth Street, N.W.
Washington, DC 20004

In re Application of	:	
ZACCHE et al.	:	
Application No.: 10/415,002	:	
PCT No.: PCT/IT01/00521	:	DECISION ON REQUEST
Int. Filing Date: 15 October 2001	:	
Priority Date: 26 October 2000	:	
Attorney Docket No.: 82062.0043	:	
For: PRESSURIZATION DEVICE		

This is a decision on applicants' "Petition under 37 CFR 1.182" filed in the Patent and Trademark Office on 22 January 2004. The petition fee under 37 CFR 1.17(h) has been charged to Deposit Account no. 50-1349.

BACKGROUND

On 15 October 2001, applicant filed international application PCT/IT01/00521 which claimed a priority date of 26 October 2000. A copy of the international application was communicated to the United States Patent and Trademark Office from the International Bureau on 02 May 2002. Pursuant to 37 CFR 1.495, the deadline for payment of the basic national fee in the United States was to expire 30 months from the priority date, 26 April 2003.

On 23 April 2003, applicants filed a Transmittal Letter for entry into the national stage accompanied, *inter alia,* by: the requisite basic national fee; a copy of the international application; and an information disclosure statement.

On 30 June 2003, the United States Designated/Elected Office (DO/EO/US) mailed a NOTIFICATION OF MISSING REQUIREMENTS UNDER 35 U.S.C. 371 (Form PCT/DO/EO/905) indicating that an oath or declaration executed by the inventor and the $130.00 surcharge for filing after the thirty-month period were required. The notification set a TWO MONTH period for response.

On 22 January 2004, applicants filed "Petition under 37 CFR 1.182" which was accompanied, inter alia, by: copy of the declaration and power of attorney; a post card receipt; and a copy of a transmittal letter for application no. 10/203,933.

DISCUSSION

Accordingly, the present petition has been treated as a petition under 37 CFR 1.182 to correct the application number identified on applicant's 26 August 2003 submission to the proper application number, that is, 10/415,002.

The best evidence of what was actually received by the Office is a postcard receipt containing a specific itemization of all the items being submitted. See MPEP 503. Here, applicants have provided a copy of their date-stamped filing receipt. The receipt identifies the application by applicant, title of invention, serial/application number, and the docket number. The receipt itemizes, inter alia: Transmittal Letter; a Check for $130.00; and a Declaration for Patent Application. The receipt is stamped "Rec'd. OIPE AUG 26 2003" across its face. A review of the papers filed 26 August 2003 reveals that the declaration included sufficient information to permit identification of the application to which it was intended to be directed, i.e., national stage application no.10/415,002.

CONCLUSION

Applicants' petition under 37 CFR 1.182 is **GRANTED**. The declaration and power of attorney filed 26 August 2003 was a timely response to the Notification of Missing Requirements mailed 30 June 2003.

A review of the application papers reveals that applicant completed all the requirements of 35 U.S.C. 371 for entry into the national stage. This application will be given an international application filing date of 15 October 2001 and a date of **26 August 2003** under 35 U.S.C. 371.

The application is being returned to the United States Designated/Elected Office for further processing in accordance with this decision.

Anthony Smith

Anthony Smith
Attorney-Advisor
Office of PCT Legal Administration
Tel: (703) 308-6314
Fax: (703) 308-6459

UNITED STATES PATENT AND TRADEMARK OFFICE

COMMISSIONER FOR PATENTS
UNITED STATES PATENT AND TRADEMARK OFFICE
P.O. BOX 1450
ALEXANDRIA, VA 22313-1450
www.uspto.gov

Joseph E Zahner
Saint Louis University
Suite C110
3556 Caroline Mall
St Louis MO 63104-1085

COPY MAILED

JUL 0 5 2006

OFFICE OF PETITIONS

In re Application of	:	
Waisman, et al.	:	
Application No. 10/415,012	:	ON PETITION
Filed: April 22, 2003	:	
Attorney Docket No. ME03-220// 101991(new)	:	

This is a decision on the Request to Withdraw as attorney or agent of record under 37 CFR § 1.36(b), filed November 17, 2005, and the petition under 37 CFR § 1.183 to waive 37 CFR § 1.32(b)(4), which requires that a power of attorney be signed by each applicant for patent.

The request to withdraw as attorney is **APPROVED**.

The petition under 37 CFR § 1.183 to waive 37 CFR § 1.32(b)(4) is **DISMISSED**.

A grantable request to withdraw as attorney/agent of record must be signed by every attorney/agent seeking to withdraw or contain a clear indication that one attorney is signing on behalf of another/others. A request to withdraw will not be approved unless at least 30 (thirty) days would remain between the date of approval and the later of the expiration date of a time to file a response or the expiration date of the maximum time period which can be extended under 37 CFR § 1.136(a).

The request to withdraw was signed by Joseph E. Zahner, the sole attorney of record. Petitioners are reminded that there are no attorneys of record at this time because the petition lacks a power of attorney signed by David M. Waisman and Mijung Kwon. The undersigned cannot locate the "attached powers of attorney as appointing the referenced attorney" (petition first page). Therefore, the petition under 37 CFR § 1.183 to waive 37 CFR § 1.32(b)(4) to approve the appointment of a new attorney by less than all applicants for patent is dismissed.

Only the correspondence address of record has been changed to the address specified on the November 17, 2005 request to withdraw and the new correspondence address is the address indicated below.

Further correspondence with respect to the petition under 37 CFR § 1.183 to waive 37 CFR § 1.32(b)(4) should be addressed as follows:

By mail: Mail Stop PETITION
Commissioner for Patents
Post Office Box 1450
Alexandria, VA 22313-1450

By hand: U.S. Patent and Trademark Office
Customer Service Window, Mail Stop Petition
Randolph Building
401 Dulany Street
Alexandria, VA 22314

By FAX: (571) 273-8300 - ATTN: Office of Petitions

The application will be returned to Technology Center AU 1643.

Telephone inquiries concerning this decision should be directed to the undersigned at (571) 272-3230.

Shirene Willis Brantley
Shirene Willis Brantley
Senior Petitions Attorney
Office of Petitions

cc: POLSINELLI SHALTON WELTE SUELTHAUS P.C.
700 W. 47TH STREET
SUITE 1000
KANSAS CITY, MO 64112-1802

UNITED STATES PATENT AND TRADEMARK OFFICE

Commissioner for Patents
United States Patent and Trademark Office
P.O. Box 1450
Alexandria, VA 22313-1450
www.uspto.gov

KATHRYN J. DOTY
POISINELLI SHALTON WELTE SUELTHAUS PC
100 S. FOURTH STREET
SUITE 1100
ST. LOUIS MO 63102

COPY MAILED

OCT 19 2006

OFFICE OF PETITIONS

In re Application of
Waisman, et al.
Application No. 10/415,012
Filed: April 22, 2003
Attorney Docket No. ME03-220// 101991(new)

ON PETITION

This is a decision on the reconsideration petition under 37 CFR § 1.183 to waive 37 CFR § 1.32(b)(4), which requires that a power of attorney be signed by each applicant for patent. The petition was filed on August 25, 2006.

In view of (1) petitioners' inability to locate fellow joint inventor Geetha Kassam despite diligent efforts and (2) the withdrawal of the only attorney of record, it is agreed that justice would be served by waiving the requirement for her signature on any power of attorney.

The power of attorney signed by the two available joint inventors, Minjung Kwon and David M. Waisman, has been accepted, on petition, and placed in the file.

The petition under 37 CFR § 1.183 to waive 37 CFR § 1.32(b)(4) is **GRANTED**.

The application will be returned to Technology Center AU 1643.

Telephone inquiries concerning this decision should be directed to the undersigned at (571) 272-3230.

Shirene Willis Brantley
Senior Petitions Attorney
Office of Petitions

UNITED STATES PATENT AND TRADEMARK OFFICE

Commissioner for Patents
United States Patent and Trademark Office
P.O. Box 1450
Alexandria, VA 22313-1450
www.uspto.gov

MAR 23 2007

KATE H MURASHIGE
MORRISON & FOERSTER
SUITE 500
3811 VALLEY CENTRE DRIVE
SAN DIEGO CA 92130-2332

In re Application of	:
Pia M. Challita-Eid et al	:
Serial No.: 10/415,014	: PETITION TO MAKE SPECIAL
Filed: October 27, 2003	:
Attorney Docket No.: 511582004300	:

This is in response to the petition filed April 24, 2003, to make the above-identified application special under the provisions of 37 CFR 1.102(d).

Applicant has satisfied the provisions set forth in M.P.E.P. 708.02, XII. Therefor the petition is **GRANTED**.

Should there be any questions with regard to this letter please contact William R. Dixon, Jr. by letter addressed to the Director, Technology Center 1600, P.O. Box 1450, Alexandria, VA 22313-1450, or by telephone at 571-272-0519 or by facsimile transmission at 571-273-8300.

William R. Dixon, Jr.
Special Program Examiner
Technology Center 1600

UNITED STATES PATENT AND TRADEMARK OFFICE

Commissioner for Patents
United States Patent and Trademark Office
P.O. Box 1450
Alexandria, VA 22313-1450
www.uspto.gov

MAILED
FROM DIRECTOR'S OFFICE
JUN 19 2006
TECHNOLOGY CENTER 3600

RENNER OTTO BOISSELLE & SKLAR, LLP
1621 EUCLID AVENUE
NINETEENTH FLOOR
CLEVELAND, OH 44115

In re application of	:	**DECISION ON PETITION**
Jeffrey B. Mcgeorge	:	**TO MAKE SPECIAL**
Application No. 10/415,022	:	**(ACCELERATED**
Filed: September 05, 2003	:	**EXAMINATION)**
For: TRADING SYSTEM		

This is in response to the petition filed on June 13, 2006 to make the above-identified application special on the basis of special examining procedure for certain new applications - accelerated examination as set forth in MPEP § 708.02 VIII.

The requirements for granting special status under this section are: (A) a petition to make special accompanied by the fee set forth in 37 CFR 1.17(i); (B) all claims being directed to a single invention, or an election without traverse if the Office determines that all the claims are not directed to a single invention; (C) a statement that a pre-examination search was made listing the field of search; (D) one copy of each of the references deemed most closely related to the subject matter encompassed by the claims if said references are not already of record; and (E) a detailed discussion of how the claimed subject matter is patentable over the references in accordance with 37 CFR 1.111 (b) and (c).

Since all of the requirements for special status under MPEP § 708.02 VIII have been met, the petition is **GRANTED**.

The examiner is directed (1) to make an interference search for possible interfering applications, (2) to promptly examine this application out of turn, and (3) if any interfering application is discovered, to examine such application simultaneously and state in the first official letter of such application that it is being taken out of turn because of a possible interference.

Petitioner is advised that this application will continue to be special, throughout its entire prosecution and pendency, including interference or appeal, if any, only if petitioner makes a prompt ***bona fide*** effort, in response to each Office action, to place the application in condition for allowance, even if it is necessary to conduct an interview with the examiner to accomplish this purpose.

SUMMARY: Petition to Make Special **GRANTED.**

Kenneth J. Dorner
Special Programs Examiner
Technology Center 3600
(571) 272-6587

KJD/slb: 06/15/06

19 AUG 20

UNITED STATES PATENT AND TRADEMARK OFFICE

Commissioner for Patents
United States Patent and Trademark Office
PO Box 1450
Alexandria, VA 22313-1450
www.uspto.gov

Attn: Director of Intellectual Property
Eatoni Ergonomics, Inc.
42 West 24th Street
New York, NY 10010

In re Application of Gutowitz et al. US Application No.: 10/415,031 PCT Application No.: PCT/US01/30264 International Filing Date: 27 September 2001 Priority Date: 27 September 2000 Attorney's Docket No.: EATONI - 5 For: METHOD AND APPARATUS FOR ACCELERATED ENTRY OF SYMBOLS ON A REDUCED KEYPAD	**DECISION ON PETITION FOR REVIVAL UNDER 37 CFR 1.137(b)**

The petition to revive under 37 CFR 1.137(b), filed on 23 April 2003 in the above-captioned application, is hereby **GRANTED** as follows.

On 27 September 2001, Applicants filed international application PCT/US01/30264, which claimed priority of an earlier application filed on 27 September 2000. The thirty-month period for paying the basic national fee ended at midnight on 27 March 2002.

The basic national fee required by 37 CFR 1.495(b) was not submitted on or before 27 March 2002. Accordingly, the international application became abandoned as to the United States on 28 March 2002.

The instant petition is accompanied by, *inter alia*:

(1) A transmittal letter for entry into the national stage in the United States under 35 U.S.C. 371;

(2) An authorization to charge the $50 basic national fee (small entity) required by 35 U.S.C. 371(c)(1) and 37 CFR 1.492(a)(4), and the $650 petition fee (small entity), to Deposit Account No. 50-1758;

(3) A statement to the effect that the entire delay in filing the basic national fee from its due date until the filing of the instant petition under 37 CFR 1.137(b) was unintentional.

US 1041503103P1

Creation date: 09-17-2003
Indexing Officer: PDAYS - PATRICE DAYS
Team: OIPEScanning
Dossier: 10415031

Legal Date: 09-10-2003

No.	Doccode	Number of pages
1	M903	2

Total number of pages: 2

Remarks:

Order of re-scan issued on .....

UNITED STATES PATENT AND TRADEMARK OFFICE

Commissioner for Patents
United States Patent and Trademark Office
P.O. Box 1450
Alexandria, VA 22313-1450
www.uspto.gov

COPY MAILED
AUG 1 1 2006
OFFICE OF PETITIONS

EATONI ERGONOMICS INC
DIRECTOR OF INTELLECTUAL PROPERTY
42 WEST 24TH ST
NEW YORK NY 10010

In re Application of	:	
Gutowitz, et al.	:	
Application No. 10/415,031	:	ON PETITION
Filed: June 17, 2004	:	
Attorney Docket No. 5000-5186	:	

This is a decision on the petition to revive under 37 CFR 1.137(b), filed October 13, 2005.

The petition under 37 CFR 1.137(b) is **GRANTED**.

The above-identified application became abandoned for failure to timely file a reply in response to the Notice of Non-Compliant Amendment mailed February 15, 2005. This Notice set a shortened period for reply of one (1) month. No extensions of time under 37 CFR 1.136(a) were obtained. No reply having been received, the application became abandoned on March 16, 2005. A Notice of Abandonment was mailed on September 19, 2005.

With the instant petition, petitioner paid the petition fee, submitted the required reply in the form of an amendment, and made the proper statement of unintentional delay.

The matter is being forwarded to Group Art Unit 2125 for consideration of the Amendment filed October 13, 2005.

Telephone inquiries related to this decision should be directed to the undersigned at (571)272-3207.

Cliff Congo
Petitions Attorney
Office of Petitions

02 MAR 2004

#7

UNITED STATES PATENT AND TRADEMARK OFFICE

COMMISSIONER FOR PATENTS
UNITED STATES PATENT AND TRADEMARK OFFICE
P.O. BOX 1450
ALEXANDRIA, VA 22313-1450
www.uspto.gov

John J. McDonnell
McDonnell Boehnen Hulbert & Berghoff
300 South Wacker Drive
Chicago, IL 60606

In re Application of CUNNINGHAM, et al. PCT No.: PCT/US01/50723 Application No.: 10/415,037 Int. Filing Date: 23 October 2001 Priority Date: 30 October 2000 Atty. Docket No.: 00-1123-E1 For: A LABEL-FREE HIGH-THROUGHPUT OPTICAL TECHNIQUE FOR DETECTING BIOMOLECULAR INTERACTIONS	DECISION ON PETITION UNDER 37 CFR 1.47(a)

This decision is in response to applicant's "Petition Under 37 CFR § 1.47(a)" filed 14 January 2004 in the United States Patent and Trademark Office (USPTO).

BACKGROUND

On 23 October 2001, applicant filed international application PCT/US01/50723, which claimed priority of an earlier application filed 30 October 2000. A Demand for international preliminary examination, in which the United States was elected, was filed prior to the expiration of nineteen months from the priority date. Accordingly, the thirty-month period for paying the basic national fee in the United States expired at midnight on 30 April 2003.

On 23 April 2003, applicant filed a transmittal letter for entry into the national stage in the United States, which was accompanied by the requisite basic national fee as required by 35 U.S.C. 371(c)(1) and a copy of the International Search Report. An executed oath or declaration was not included.

On 14 August 2003, applicant was mailed a NOTIFICATION OF MISSING REQUIREMENTS UNDER 35 U.S.C. 371 (Form PCT/DO/EO/905) informing applicant of the need to provide an oath or declaration of the inventors, in compliance with 37 CFR 1.497(a) and (b), identifying the application by the international application number and international filing date. Applicant was given two months to respond and advised that this time period could be extended with a proper petition and payment of fees

On 14 January 2004, applicant responded with the present petition to accept the combined declaration and power of attorney without the signature of joint inventors Douglas Hobbs and Jane Pepper accompanied by a declaration executed by the remaining joint inventors on their own behalf and on the behalf of the non-signing joint inventors. In addition, applicant filed a petition for three-month extension of time accompanied by payment of the appropriate three-month extension fee. With the filing of the petition and payment of the extension fee, applicant's response is considered timely filed.

DISCUSSION

A petition under 37 CFR 1.47(a) must be accompanied by (1) the fee under 37 CFR 1.17(i), (2) factual proof that the missing joint investor refuses to execute the application or cannot be reached after diligent effort, (3) a statement of the last known address of the missing inventor, and (4) an oath or declaration by each 37 CFR 1.47(a) applicant on his or her own behalf and on behalf of the non-signing joint inventor. With the filing of the present petition and accompanying papers, applicant has satisfied all four items and it is appropriate to grant the petition under 37 CFR 1.47(a).

Regarding item (1), applicant has provided payment of the appropriate petition fee.

As to item (2), applicant has provided a signed declaration from Lisa Hillman detailing her efforts to obtain the signature of Mr. Hobbs and Ms. Pepper; including sending them complete sets of the application papers, without receiving responses from the non-signing inventors.

Regarding item (3), applicant has supplied a statement of the last known addresses of Mr. Hobbs and Ms. Pepper.

As to item (4), applicant has a combined declaration and power of attorney executed by the remaining joint inventors on their own behalf and on the behalf of the non-signing joint inventors. Accordingly, applicant has satisfied all four items detailed above and it is proper to grant applicant's petition at this time.

CONCLUSION

For the reasons above, applicant's petition under 37 CFR 1.47(a) is **GRANTED**.

The application has an international filing date of 19 July 2001 under 35 U.S.C. 363, and will be given a date of **20 January 2004** under 35 U.S.C. 371(c)(1), (c)(2) and (c)(4).

As provided in 37 CFR 1.47(a), a notice of the filing of this application will be forwarded to the non-signing inventor at his last known address of record. A notice of the filing of the application under 37 CFR 1.47(a) will be published in the Official Gazette. This application is being returned to the DO/EO/US for processing in accordance with this decision. Specifically, the mailing of a Notification of Acceptance (Form PCT/DO/EO/903).

Derek A. Putonen
Attorney Advisor
Office of PCT Legal Administration
Tel: (703) 305-0130
Fax: (703) 308-6459

02 MAR 2004

UNITED STATES PATENT AND TRADEMARK OFFICE

COMMISSIONER FOR PATENTS
UNITED STATES PATENT AND TRADEMARK OFFICE
P.O. BOX 1450
ALEXANDRIA, VA 22313-1450
www.uspto.gov

Mr. Douglas Hobbs
1998 Massachusetts Avenue
Lexington, MA 024240

In re Application of
CUNNINGHAM, et al.
PCT No.: PCT/US01/50723
Application No.: 10/415,037
Int. Filing Date: 23 October 2001
Priority Date: 30 October 2000
Atty. Docket No.: 00-1123-E1
For: A LABEL-FREE HIGH-THROUGHPUT OPTICAL TECHNIQUE FOR DETECTING BIOMOLECULAR INTERACTIONS

Dear Mr. Hobbs:

You are named as an inventor in the above identified United States patent application, filed under the provisions of 37 CFR 1.47(a) and 35 U.S.C. 116. Should a patent be granted, you will be designated as an inventor.

As a named inventor, you are entitled to inspect any paper in the file wrapper of the application, order copies of all or any part thereof (at a prepaid cost per 37 CFR 1.19) or to make your position of record in the application. Alternately, you may arrange to do any of the preceding through a registered patent agent or attorney presenting written authorization from you. If you care to join in the application, counsel of record (see below) would presumably assist you. Joining in the application would entail the filing of the appropriate oath or declaration by you pursuant to 37 CFR 1.63.

Derek A. Putonen
Attorney Advisor
Office of PCT Legal Administration
Tel: (703) 305-0130
Fax: (703) 308-6459

John J. McDonnell
McDonnell Boehnen Hulbert & Berghoff
300 South Wacker Drive
Chicago, IL 60606

UNITED STATES PATENT AND TRADEMARK OFFICE

Commissioner for Patents
United States Patent and Trademark Office
P.O. Box 1450
Alexandria, VA 22313-1450
www.uspto.gov

MCDONNELL BOEHNEN HULBERT &
BERGHOFF LLP
300 S. WACKER DRIVE
32ND FLOOR
CHICAGO IL 60606

COPY MAILED

SEP 1 8 2009

OFFICE OF PETITIONS

In re Patent No. 7,435,385	:	
Cunningham, et al.	:	DECISION ON
Issue Date: October 14, 2008	:	REQUEST FOR RECONSIDERATION
Application No. 10/415,037	:	OF
Filed: January 20, 2004	:	PATENT TERM ADJUSTMENT
Attorney Docket No. 00-1123-E1	:	

This is in response to the "REQUEST FOR RECONSIDERATION OF PATENT TERM ADJUSTMENT FILED UNDER 37 CFR §1.705 (b)-(d)," filed December 11, 2008, requesting that the patent term adjustment determination for the above-identified patent be changed from one thousand and six (1,006) days to one thousand two hundred seventy-seven (1,277) days.

The request for reconsideration is granted to the extent that the determination has been reconsidered; however, the request for reconsideration of patent term adjustment is **DISMISSED** with respect to making any change in the patent adjustment determination under 35 U.S.C. § 154(b) of 1,006 days.

On October 14, 2008, the above-identified application matured into U.S. Patent No. 7,435,385 with a patent term adjustment of 1,006 days.

This request for reconsideration of patent term adjustment was timely filed within two months of the issue date of the patent. See 1.705(d).

The Office acknowledges submission of the $200.00 fee set forth in 37 CFR 1.18(e). No additional fees are required.

Patentees request recalculation of the patent term adjustment based on the decision in *Wyeth v. Dudas*, 580 F. Supp. 2d 138, 88 U.S.P.Q. 2d 1538 (D.D.C. 2008). Patentees assert that pursuant

to *Wyeth*, a PTO delay under §154(b)(1)(A) overlaps with a delay under §154(b)(1)(B) only if the delays "occur on the same day." Patentees maintain that a portion of the period of adjustment due to the Three Year Delay by the Office, pursuant to 37 CFR § 1.703(b), 271 of 633 days and the period of adjustment due to examination delay, pursuant to 37 CFR §1.702(a), of 1,033 days do not overlap as these periods do not occur on the same day

Patentees argue that the period of adjustment due to the Three Year Delay by the Office, pursuant to 37 CFR § 1.702(b), is 633 days. Patentees calculate this 633 day period based on the application having fulfilled requirements under 35 U.S.C. §371 on January 20, 2004, and the patent having not issued until October 14, 2008, three years and 633 days later.

Patentees are informed that the Three Year Delay period is triggered by the application's commencement date, not the § 371 fulfillment date. The commencement date is 30 months from the priority date claimed in the international application, or earlier. The priority date claimed in the international application is October 30, 2000. Thirty months from that date is April 30, 2003, which is the beginning of the Three Year Delay period. Accordingly, the period of adjustment under § 1.702(b) is 898 days, counting the number of days beginning on May 1, 2006 and ending on October 14, 2008 when the patent issued.

Patentees assert that in addition to the three year delay period, they are entitled to a period of adjustment due to examination delay, pursuant to 37 CFR §1.702(a) of 1,033 days for the failure by the Office to mail at least one of a notification under 35 U.S.C. 132 not later than fourteen months after the date the application fulfilled the requirements of 35 U.S.C. § 371 in an international application, pursuant to § 1.702(a)(1). A non-final Office action was mailed on January 17, 2008, which was 14 months and 1,033 days after the § 371 fulfillment date.

Under 37 CFR § 1.703(f), patentees are entitled to a period of patent term adjustment equal to the period of delays based on the grounds set forth in 37 CFR §1.702 reduced by the period of time equal to the period of time during which patentees failed to engage in reasonable efforts to conclude prosecution pursuant to 37 CFR §1.704. In other words, the period of Office delay reduced by the period of applicant delay. The period of reduction of 27 days for applicant delay is not in dispute.

Patentees assert that the total period of Office delay is the sum of the period of Three Year Delay (633 days per patentees' calculation) and the period of Examination Delay (1,033 days, not in dispute) **to the extent that these periods of delay are not overlapping.**

Patentees contend that there is an overlap of 362 days between the two periods of delay, from January 21, 2007 to January 17, 2008. However, as discussed above, the Three Year Delay period is from May 1, 2006 to October 14, 2008. Therefore, applying patentees' definition of overlap, a portion of the Three Year Delay period (May 1, 2006 to October 14, 2008) overlaps with a portion of the period of examination delay for the failure by the Office to mail at least one of a notification under 35 U.S.C. 132 not later than fourteen months after the date the application fulfilled the requirements of 35 U.S.C. 371 in an international application, pursuant to § 1.702(a)(1), (March 21, 2005 to January 17, 2008). This overlapping period is the 627 days running from May 1, 2006 to January 17, 2008. Considering that the three-year period is properly calculated based on the commencement date and is 898 days, not 633 days, and that the period of overlap is 627 days, applying patentees' definition of overlap to the correct three-year period, patentees assertion of the total period of Office delay is considered to be 1,304 days, which is the sum of the period of Three Year Delay (898 days) and the period of Examination Delay (1,033 days), reduced by the period of overlap (627 days).

Considering that the Three Year Delay period is properly calculated based on the commencement date and is 898 days, not 633 days, and that the period of overlap is 627 days, applying patentees' definition of overlap to the correct three-year period, patentees assertion of entitlement to a patent term adjustment is considered to be 1,277 days (898 + 1,033 reduced by 627 overlap - 27 for applicant delay).

As discussed above, the Office states that the patent issued 3 years and 898 days after the application's commencement date. The Office agrees that the action detailed above was not taken within the specified time frames, and thus, the entry of period of adjustment of 898 days is correct. At issue is whether Patentees should accrue 271 (adjusted for overlap, per patentees' definition of overlap and Office's calculation of the Three Year Delay Period) days of patent term adjustment for the Office taking in excess of three years to issue the patent, as

well as, 1,033 days for Office failure to take a certain action within a specified time frame (or examination delay).

The Office contends that 898 days overlap. Patentees' interpretation of the period of overlap has been considered and found to be incorrect. Patentees' calculation of the period of overlap is inconsistent with the Office's interpretation of this provision. 35 U.S.C. 154(b)(2)(A) limits the adjustment of patent term, as follows:

> to the extent that the periods of delay attributable to grounds specified in paragraph (1) overlap, the period of any adjustment granted under this subsection shall not exceed the actual number of days the issuance of the patent was delayed.

Likewise, 37 CFR 1.703(f) provides that:

> To the extent that periods of delay attributable to the grounds specified in §1.702 overlap, the period of adjustment granted under this section shall not exceed the actual number of days the issuance of the patent was delayed.

As explained in *Explanation of 37 CFR 1.703(f) and of the United States Patent and Trademark Office Interpretation of 35 U.S.C. 154(b)(2)(A)*, 69 Fed. Reg. 34283 (June 21, 2004), the Office interprets 35 U.S.C. 154(b)(2)(A) as permitting either patent term adjustment under 35 U.S.C. 154(b)(1)(A)(i)-(iv), or patent term adjustment under 35 U.S.C. 154(b)(1)(B), but not as permitting patent term adjustment under both 35 U.S.C. 154(b)(1)(A)(i)-(iv) and 154(b)(1)(B). Accordingly, the Office implements the overlap provision as follows:

> If an application is entitled to an adjustment under 35 U.S.C. 154(b)(1)(B), the entire period during which the application was pending (except for periods excluded under 35 U.S.C. 154(b)(1)(B)(i)-(iii)), and not just the period beginning three years after the actual filing date of the application, is the period of delay under 35 U.S.C. 154(b)(1)(B) in determining whether periods of delay overlap under 35 U.S.C. 154(b)(2)(A). Thus, any days of delay for Office issuance of the patent more than 3 years after the filing date of the application, which overlap with the days of patent term adjustment accorded prior to

> the issuance of the patent will not result in any additional patent term adjustment. See 35 U.S.C. 154(b)(1)(B), 35 U.S.C. 154(b)(2)(A), and 37 CFR § 1.703(f). See *Changes to Implement Patent Term Adjustment Under Twenty Year Term; Final Rule*, 65 Fed. Reg. 56366 (Sept. 18, 2000). See also *Revision of Patent Term Extension and Patent Term Adjustment Provisions; Final Rule*, 69 Fed. Reg. 21704 (April 22, 2004), 1282 Off. Gaz. Pat. Office 100 (May 18, 2004). See also *Explanation of 37 CFR 1.703(f) and of the United States Patent and Trademark Office Interpretation of 35 U.S.C. 154(b)(2)(A)*, 69 Fed. Reg. 34283 (June 21, 2004).

The current wording of § 1.703(f) was revised in response to the misinterpretation of this provision by a number of patentees. The rule was slightly revised to more closely track the corresponding language of 35 U.S.C. 154(b)(2)(A). The relevant portion differs only to the extent that the statute refers back to provisions of the statute whereas the rule refers back to sections of the rule. This was not a substantive change to the rule nor did it reflect a change of the Office's interpretation of 35 U.S.C. 154(b)(2)(A). As stated in the *Explanation of 37 CFR 1.703(f) and of the United States Patent and Trademark Office Interpretation of 35 U.S.C. 154(b)(2)(A)*, the Office has consistently taken the position that if an application is entitled to an adjustment under the three-year pendency provision of 35 U.S.C. 154(b)(1)(B), the entire period during which the application was pending before the Office (except for periods excluded under 35 U.S.C. 154(b)(1)(B)(i)-(iii)), and not just the period beginning three years after the actual filing date of the application, is the relevant period under 35 U.S.C. 154(b)(1)(B) in determining whether periods of delay "overlap" under 35 U.S.C. 154(b)(2)(A).

This interpretation is consistent with the statute. Taken together the statute and rule provide that to the extent that periods of delay attributable to grounds specified in 35 U.S.C. 154(b)(1) and in corresponding §1.702 overlap, the period of adjustment granted shall not exceed the actual number of days the issuance of the patent was delayed. The grounds specified in these sections cover the A) guarantee of prompt Patent and Trademark Office responses, B) guarantee of no more than 3 year application pendency, and C) guarantee or adjustments for delays due to interference, secrecy orders and appeals. A section by

section analysis of 35 U.S.C. 154(b)(2)(A) specifically provides that:

> Section 4402 imposes limitations on restoration of term. In general, pursuant to [35 U.S.C.] 154(b)(2)(A)-(C), total adjustments granted for restorations under [35 U.S.C. 154](b)(1) are reduced as follows: (1) To the extent that there are multiple grounds for extending the term of a patent that may exist simultaneously (e.g., delay due to a secrecy order under [35 U.S.C.] 181 and administrative delay under [35 U.S.C.] 154(b)(1)(A)), the term should not be extended for each ground of delay but only for the actual number of days that the issuance of a patent was delayed; See 145 Cong. Rec. S14,718[1]

As such, the period for over 3 year pendency does not overlap only to the extent that the actual dates in the period beginning three years after the commencement date overlap with the actual dates in the periods for failure of the Office to take action within specified time frames. In other words, consideration of the overlap does not begin three years after the commencement date of the application.

In this instance, the relevant period under 35 U.S.C. 154(b)(1)(B) in determining whether periods of delay "overlap" under 35 U.S.C. 154(b)(2)(A) is the entire period from the application's commencement date through the date it matured into Patent No. 7,435,385, April 30, 2003 to October 14, 2008. (There were no periods excluded under 35 U.S.C. 154(b)(1)(B)(i)-(iii)).

1,033 days of patent term adjustment were accorded prior to the issuance of the patent for the Office failing to respond within a specified time frame during the pendency of the application. During that time, the issuance of the patent was delayed by 1,033 days, not 1,033 + 271 days. The Office took 14 months and 1,033 days to issue a first Office action. Otherwise, the Office took all actions set forth in 37 C.F.R. § 1.702(a) within the prescribed timeframes. Nonetheless, given the initial 1,033 days of Office delay and the time allowed within the timeframes

---

[1] The AIPA is title IV of the Intellectual Property and Communications Omnibus Reform Act of 1999 (S. 1948), which was incorporated and enacted as law as part of Pub. L. 106-113. The Conference Report for H.R. 3194, 106th Cong. 1st Sess. (1999), which resulted in Pub. L. 106-113, does not contain any discussion (other than the incorporated language) of S. 1948. A section-by-section analysis of S. 1948, however, was printed in the Congressional Record at the request of Senator Lott, See 145 Cong. Rec. S14,708-26 (1999)(daily ed. Nov. 17, 1999).

for processing and examination, the patent issued, three years and 898 days after its filing date. The Office did not delay 1,033 days then an additional 271 days (per patentees' definition of overlap). The 898 days attributable to the delay in the issuance of the patent overlaps with the adjustment of 1,033 days attributable to ground specified in § 1.702(a)(1). Entry of both periods is not warranted. 1,033 days was properly determined to be the actual number of days that the issuance of the patent was delayed, considering the 898 days over three years.

Accordingly, at issuance, the Office properly entered no additional days of patent term adjustment for the Office taking in excess of 3 years to issue the patent.

In view thereof, the patent term adjustment at the time of the issuance of the patent remains 1,006 days.

The Office acknowledges submission of the $200.00 fee set forth in 37 CFR 1.18(e). No additional fees are required. The fee will not be refunded.

Patentees are reminded of their duty of candor to the Office.

Telephone inquiries specific to this matter should be directed to Shirene Willis Brantley, Senior Petitions Attorney, at (571) 272-3230.

Nancy Johnson
Senior Petitions Attorney
Office of the Deputy Commissioner
for Patent Examination Policy

27 SEP 2004

UNITED STATES PATENT AND TRADEMARK OFFICE

COMMISSIONER FOR PATENTS
UNITED STATES PATENT AND TRADEMARK OFFICE
P.O. BOX 1450
ALEXANDRIA, VA 22313-1450
www.uspto.gov

DAVIS & BUJOLD, P.L.L.C.
FOURTH FLOOR
500 N. COMMERCIAL STREET
MANCHESTER, NH 03101-1151

In re Application of HENNEKEN et al	:	
U.S. Application No.: 10/415,038	:	
PCT Application No.: PCT/EP01/12847	:	
Int. Filing Date: 07 November 2001	:	
Priority Date Claimed: 11 November 2000	:	DECISION
Attorney Docket No.: ZAHFRI P504US	:	
For: METHOD FOR CONTROLLING AN AUTOMATIC GEARBOX OF A MOTOR VEHICLE IN THE EVENT THAT THE GAS/PEDAL IS SPONTANEOUSLY RELEASED	:	

This is in response to applicant's facsimile communication dated 21 April 2004, which is being treated as a petition under 37 CFR 1.10(c). No petition fee is due.

BACKGROUND

On 07 November 2001, applicant filed international application PCT/EP01/12847, which claimed priority of an earlier Germany application filed 11 November 2000. A copy of the international application was communicated to the USPTO from the International Bureau on 16 May 2002. The thirty-month period for paying the basic national fee in the United States expired on 11 May 2003.

On 23 April 2003, applicant filed national stage papers in the United States Designated/Elected Office (DO/EO/US). The submission was accompanied by, *inter alia*, the basic national fee required by 35 U.S.C. 371(c)(1).

On 12 August 2003, the DO/EO/US mailed a Notification of Acceptance of Application Under 35 U.S.C. 371 (Form PCT/DO/EO/903).

On 21 April 2004, applicant filed the present petition under 37 CFR 1.10(c).

DISCUSSION

37 CFR 1.10(c) states,

> Any person filing correspondence under this section that was received by the Office and delivered by the "Express Mail Post Office to Addressee" service of the USPS, who can show that there is a discrepancy between the filing date accorded by the Office to the correspondence and the date of deposit as shown by the "date-in" on the "Express Mail" mailing label or other official USPS notation, may petition the Commissioner to accord the correspondence a filing date as of the "date-in" on the "Express Mail" mailing label or other official USPS notation, provided that:
>
> (1) The petition is filed promptly after the person becomes aware that the Office has accorded, or will accord, a filing date other than the USPS deposit date;
>
> (2) The number of the "Express Mail" mailing label was placed on the paper(s) or fee(s) that constitute the correspondence prior to the original mailing by "Express Mail;" and
>
> (3) The petition includes a true copy of the "Express Mail" mailing label showing the "date-in," and of any other official notation by the USPS relied upon to show the date of deposit.

With regard to item (1) above, the petition was promptly filed after applicant became aware of the accorded national stage entry date.

With regard to item (2) above, a review of the Transmittal Letter and the Express Mail mailing label indicates that the Express Mail mailing label number was placed on the correspondence in question prior to the original mailing by Express Mail.

With regard to item (3) above, the Express Mail mailing label shows a "date-in" of 23 April 2003.

CONCLUSION

For the reasons above, the petition under 37 CFR 1.10(c) is GRANTED.

The Notification of Acceptance of Application Under 35 U.S.C. 371 (Form PCT/DO/EO/903) mailed 12 August 2003 is hereby VACATED.

The application has an international filing date of 07 November 2001 and a date under 35 U.S.C. 371(c)(1), (c)(2), and (c)(4) of 23 April 2003.

This application is being forwarded to the United States Designated/Elected Office (DO/EO/US) for further processing in accordance with this decision, including preparation and mailing of a corrected Notification of Acceptance of Application Under 35 U.S.C. 371 (Form PCT/DO/EO/903) and a corrected filing receipt.

Bryan Tung
PCT Legal Examiner
Office of PCT Legal Administration

Telephone: 703-308-6614
Facsimile: 703-308-6459

25 JUL 2003

UNITED STATES PATENT AND TRADEMARK OFFICE

COMMISSIONER FOR PATENTS
UNITED STATES PATENT AND TRADEMARK OFFICE
P.O. BOX 1450
ALEXANDRIA, VA 22313-1450
www.uspto.gov

Samuel Borodach
Fish & Richardson, P.C.
45 Rockefeller Plaza, Suite 2800
New York, NY 10111

In re Application of ONO, et al. U.S. Application No.: 10/415,047 PCT No.: PCT/JP02/08728 Int. Filing Date: 29 August 2002 Priority Date: 29 August 2001 Attorney Docket No.: 10689-007US1 For: ENGINE, ENGINE EXHAUST TEMPERATURE CONTROLLING APPARATUS, AND CONTROLLING METHOD	DECISION ON REQUEST TO WITHDRAW AS ATTORNEY OF RECORD

This decision is in response to counsel's "Request For Permission to Withdraw as Attorney of Record" filed 11 June 2003 in the United States Patent and Trademark Office (USPTO).

BACKGROUND

On 29 August 2002, applicant filed the above-captioned international application, which claimed a priority date of 29 August 2001 and designated the United States. A copy of the international application was communicated to the United States Patent and Trademark Office from the International Bureau on 06 March 2003. A Demand for international preliminary examination was not filed prior to 19 months from the priority date. Accordingly, the twenty-month period for paying the basic national fee expired at midnight on 29 April 2003.

On 23 April 2003, applicant filed a transmittal letter for entry into the national stage in the United States which was accompanied by, *inter alia*, payment of the U.S. basic national fee, a translation of the international application into English, an executed declaration of the inventors, an assignment document for recording and an information disclosure sheet .

On 11 June 2003, counsel for the law firm of Fish & Richardson, P.C. filed the present request for permission to withdraw as attorney of record.

DISCUSSION

The criteria for effecting a proper withdrawal of attorney are spelled out in Section 402.06 of the Manual of Patent Examining Procedure (M.P.E.P.) which reads, in part, as follows:

In the event that a notice of withdrawal is filed by an attorney or agent of record... appropriate procedure will be followed pertaining to the withdrawal. The **withdrawal is effective when approved** rather than when received.

To expedite the handling of requests for permission to withdraw as attorney, under 37 CFR 1.36, the request should be submitted in triplicate (original and two copies) and indicate thereon the present mailing addresses of the attorney who is withdrawing and of the applicant. The examining group number should also appear on all such requests. Because the Office does not recognize law firms, each attorney of record must sign the notice of withdrawal, or the notice of withdrawal must contain a clear indication of one attorney signing on behalf of another.

The Commissioner of Patents and Trademarks usually requires that there be at least thirty days between *approval* of the withdrawal and the latter of the expiration date of a time response period or the expiration date of the period which can be obtained by a petition and fee for extension of time under 37 CFR 1.136(a). This is so that the applicant will have sufficient time to obtain other representation or take other action.

Attorney Samuel Borodach has provided a clear indication that the request is being made on behalf of himself and all other attorneys/agents of record.

Since all of the criteria delineated in Section 402.06 of the M.P.E.P. have been complied with the request to withdraw the Power of Attorney/Agent is **GRANTED**.

CONCLUSION

In view of the above discussion, counsel's Request for Withdrawal is **GRANTED**.

A copy of this decision will be forwarded to the applicant at the address indicated in the present request.

A review of the application file finds that applicant has satisfied all of the requirements of 35 U.S.C. 371 for entry into the national stage in the United States. This application is being forwarded to the United States Designated/Elected Office (DO/EO/US) for further processing in accordance with this decision, including the preparation and mailing of a Notification of

Acceptance (Form PCT/DO/EO/903). The 35 U.S.C. 371(c) date is **23 April 2003**.

Richard Cole
PCT Legal Examiner
Office of PCT Legal Administration

Derek A. Putonen
Attorney Advisor
Office of PCT Legal Administration
Tel: (703) 305-0130
Fax: (703) 308-6459

CC: Robert C. Farber, Esq.
Ostrolenk, Faber, Gerb & Soffen, LLP
1180 Avenue of the Americas
New York, NY 10036-8403

29 APR 2004

UNITED STATES PATENT AND TRADEMARK OFFICE

COMMISSIONER FOR PATENTS
UNITED STATES PATENT AND TRADEMARK OFFICE
P.O. BOX 1450
ALEXANDRIA, VA 22313-1450
www.uspto.gov

PILLSBURY WINTHROP, LLP
P.O. BOX 10500
MCLEAN VA 22102

In re Application of	:	
CUVELIER	:	
Application No.: 10/415,049	:	DECISION
PCT No.: PCT/BE01/00185	:	
Int. Filing Date: 23 October 2001	:	
Priority Date: 24 October 2000	:	
Attorney Docket No.: P 302809	:	
For: METHOD AND INSTALLATION FOR	:	
CUTTING OUT GLASS PIECES	:	

This decision is in response to applicant's submission filed via facsimile transmission in the United States Patent and Trademark Office (USPTO) on 27 February 2004, which has been treated as a petition under 37 CFR 1.181. No petition fee is required.

BACKGROUND

On 23 October 2001, applicant filed international application PCT/BE01/00185, which claimed a priority date of 24 October 2000. A copy of the international application was communicated to the United States Patent and Trademark Office from the International Bureau on 02 May 2002. The thirty-month period for paying the basic national fee in the United States expired at midnight on 27 May 2003 (24 May 2003 being a Saturday and 26 May 2003 being a Federal holiday).

On 23 April 2003, applicant filed, *inter alia*, a submission for entry into the national stage in the United States which was accompanied by, *inter alia*, the U.S. Basic National Fee.

On 27 February 2004, applicant filed the instant submission which was accompanied by, *inter alia*, a copy of a request for refund, a notification of a change in small entity status, and a receipt date-stamped 14 July 2003 by the USPTO.

DISCUSSION

Petition Under 37 CFR 1.181

A review of the application file reveals that the original papers filed 14 July 2003 are located therein. Accordingly, the petition under 37 CFR 1.181 filed 27 February 2004 is MOOT.

Request for Refund

The request for refund filed 14 July 2003 requests a refund of one-half of the fees submitted on 23 April 2003 and is accompanied by an assertion of small entity status. A refund pursuant to 37 CFR 1.26, based on establishment of small entity status, of a portion of fees timely paid in full prior to establishing status as a small entity may only be obtained if an assertion under 37 CFR 1.27(c) and a request for a refund of the excess amount are filed within three months of the date of the timely payment of the full fee. 37 CFR 1.28(a). Here, an assertion of small entity status under 37 CFR 1.27(c) and a request for refund of the excess amount have been filed within three months of the timely payment of the full fee. Accordingly, Deposit Account 03-3975 will be credited $1,193. (Applicant requested a refund of $1,148. The additional $45 is for a charge made to the Deposit Account on 08 September 2003 for additional claims in excess of twenty.)

CONCLUSION

The petition under 37 CFR 1.181 is **DISMISSED** as **MOOT** for the reasons set forth above.

The request for refund under 37 CFR 1.26 is **GRANTED** for the reasons set forth above.

Daniel Stemmer
Legal Examiner
PCT Legal Affairs
Office of Patent Cooperation Treaty
Legal Administration
Telephone: (703) 308-2066
Facsimile: (703) 308-6459

UNITED STATES PATENT AND TRADEMARK OFFICE

Commissioner for Patents
United States Patent and Trademark Office
P.O. Box 1450
Alexandria, VA 22313-1450
www.uspto.gov

DOUGHERTY CLEMENTS & HOFER
1901 ROXBOROUGH ROAD
SUITE 300
CHARLOTTE NC 28211

COPY MAILED

MAY 0 4 2006

OFFICE OF PETITIONS

In re Application of
Ken Watson et al.
Application No. 10/415,051
Filed: April 23, 2003
Attorney Docket No.: 3721

ON PETITION

This is a decision on the petition filed April 5, 2006 under 37 CFR 1.137(b),[1] to revive the above-identified application.

The petition is **GRANTED**.

This application became abandoned for failure to timely reply to the non-Final Office Action mailed December 14, 2004. A shortened statutory period of three months was set for replying to the non-Final Office Action. No extensions of time having been requested, this application became abandoned March 15, 2005. Accordingly, a Notice of Abandonment was mailed July 25, 2005.

This matter is being referred to Technology Center 3711 for appropriate action on the amendment filed April 5, 2006.

Telephone inquiries concerning this matter should be directed to the undersigned Petitions Attorney at (571) 272-3212.

Patricia Faison-Ball
Senior Petitions Attorney
Office of Petitions

---

[1]Effective December 1, 1997, the provisions of 37 CFR 1.137(b) now provide that where the delay in reply was unintentional, a petition may be filed to revive an abandoned application or a lapsed patent pursuant to 37 CFR 1.137(b). A grantable petition filed under the provisions of 37 CFR 1.137(b) must be accompanied by:

(1) the required reply, unless previously filed. In a nonprovisional application abandoned for failure to prosecute, the required reply may be met by the filing of a continuing application. In a nonprovisional application filed on or after June 8, 1995, and abandoned for failure to prosecute, the required reply may also be met by the filing of a request for continued examination in compliance with § 1.114. In an application or patent, abandoned or lapsed for failure to pay the issue fee or any portion thereof, the required reply must be the payment of the issue fee or any outstanding balance thereof. In an application abandoned for failure to pay the publication fee, the required reply must include payment of the publication fee.

(2) the petition fee as set forth in 37 CFR 1.17(m);

(3) a statement that the entire delay in filing the required reply from the due date for the reply until the filing of a grantable petition pursuant to 37 CFR 1.137(b) was unintentional. The Commissioner may required additional information where there is a question whether the delay was unintentional; and

(4) any terminal disclaimer (and fee as set forth in 37 CFR 1.20(d)) required pursuant to 37 CFR 1.137(c)).

UNITED STATES PATENT AND TRADEMARK OFFICE

UNITED STATES DEPARTMENT OF COMMERCE
United States Patent and Trademark Office
Address: COMMISSIONER FOR PATENTS
P.O. Box 1450
Alexandria, Virginia 22313-1450
www.uspto.gov

STITES & HARBISON PLLC
1199 NORTH FAIRFAX STREET
SUITE 900
ALEXANDRIA, VA 22314

Mail Date: 04/21/2010

Applicant	: Philip Craig Withers	: DECISION ON REQUEST FOR
Patent Number	: 7651271	: RECALCULATION of PATENT
Issue Date	: 01/26/2010	: TERM ADJUSTMENT IN VIEW
Appliction No	: 10/415,070	: OF WYETH AND NOTICE OF INTENT TO
Filed	: 08/01/2003	: ISSUE CERTIFICATE OF CORRECTION
		:

The Request for Recalculation is **GRANTED** to the extent indicated.

The patent term adjustment has been determined to be **12** days. The USPTO will *sua sponte* issue a certificate of correction reflecting the amount of PTA days determined by the recalculation.

Prior to the issuance of the certificate of correction, the USPTO will afford patentee an opportunity to be heard and request reconsideration. Accordingly, patentee has **one month or thirty (30) days**, whichever is longer, to file a request for reconsideration of this patent term adjustment calculation. See 35 U.S.C. 154(b)(3)(B)(ii) and 37 CFR 1.322(a)(4). No extensions of time will be granted under 37 CFR 1.136.

Patentee should use document code PET.OP if electronically filing a request for reconsideration of this patent term adjustment calculation. The patentee must also include the information required by 37 CFR 1.705(b)(2) and the fee required by 37 CFR 1.18(e). If patentee does not file a timely request for reconsideration of this patent term adjustment calculation including the information required by 37 CFR 1.705(b)(2) and the fee required by 37 CFR 1.18(e), the USPTO will issue a certificate of correction reflecting the PTA determination noted above.

Patentee should be aware that in order to preserve the right to review in the United States District Court for the District of Columbia of the USPTO patent term adjustment determination, patentee must ensure that he or she also take the steps required under 35 U.S.C. 154(b)(4)(A) in a timely manner. Nothing in the request for recalculation should be construed as providing an alternative time frame for commencing a civil action under 35 U.S.C. 154(b)(4)(A).

Any questions concerning this decision should be directed to the Office of Patent Legal Administration at 571-272-7702.

UNITED STATES PATENT AND TRADEMARK OFFICE

Commissioner for Patents
United States Patent and Trademark Office
P.O. Box 1450
Alexandria, VA 22313-1450
www.uspto.gov

SUGHRUE MION, PLLC
2100 PENNSYLVANIA AVENUE, N.W.
SUITE 800
WASHINGTON DC 20037

COPY MAILED

FEB 03 2005

OFFICE OF PETITIONS

In re Application of	:	
Toshio Yokonishi et al	:	
Application No. 10/415,075	:	ON PETITION
Filed: April 25, 2003	:	
Attorney Docket No. Q75221	:	

This is a decision on the petition, filed January 27, 2004, under 37 CFR 1.313(c)(2) to withdraw the above-identified application from issue after payment of the issue fee.

The petition is **GRANTED**.

The above-identified application is withdrawn from issue for consideration of a submission under 37 CFR 1.114 (request for continued examination). See 37 CFR 1.313(c)(2).

Petitioner is advised that the issue fee paid on May 18, 2004 in the above-identified application cannot be refunded. If, however, the above-identified application is again allowed, petitioner may request that it be applied towards the issue fee required by the new Notice of Allowance.[1]

Telephone inquiries should be directed to the undersigned at (571) 272-3208.

The examiner of Technology Center AU 3617 will consider the request for continued examination under 37 CFR 1.114.

Karen Creasy

Karen Creasy
Petitions Examiner
Office of Petitions
Office of the Deputy Commissioner
for Patent Examination Policy

---

[1] The request to apply the issue fee to the new Notice may be satisfied by completing and returning the new Issue Fee Transmittal Form PTOL-85(b), which includes the following language thereon: "Commissioner for Patents is requested to apply the Issue Fee and Publication Fee (if any) or re-apply any previously paid issue fee to the application identified above." Petitioner is advised that, whether a fee is indicated as being due or not, the Issue Fee Transmittal Form **must** be completed and timely submitted to avoid abandonment. Note the language in bold text on the first page of the Notice of Allowance and Fee(s) Due (PTOL-85).

05 NOV 2003

#4

UNITED STATES PATENT AND TRADEMARK OFFICE

COMMISSIONER FOR PATENTS
UNITED STATES PATENT AND TRADEMARK OFFICE
P.O. BOX 1450
ALEXANDRIA, VA 22313-1450
www.uspto.gov

Ronald E. Greigg
Greigg & Greigg, P.L.L.C.
1423 Powhatan Street, Suite One
Alexandria, VA 22314

In re Application of
WINTER, et al.
Application No.: 10/415,087
PUT No.: PCT/DE02/03140
Int. Filing Date: 23 August 2002
Priority Date: 25 August 2001
Attorney Docket No.: R.41425
For: FUEL INJECTION SYSTEM FOR AN INTERNAL COMBUSTION ENGINE

DECISION ON PETITION

UNDER 37 CFR 1.42

This decision is in response to applicant's "Response to Notice of Missing Requirements Under 35 U.S.C. 371" filed 17 October 2003. The response is being treated as a request for status pursuant to 37 CFR 1.42. No petition fee is required.

BACKGROUND

On 23 August 2002, applicant filed the international application, which claimed a priority date of 25 August 2001. A copy of the international application was communicated to the United States Patent and Trademark Office from the International Bureau on 06 March 2003. Pursuant to 37 CFR 1.495, the deadline for payment of the basic national fee in the United States was to expire 30 months from the priority date, 25 February 2004.

On 25 April 2003, applicant filed a transmittal letter for entry into the national stage in the United States accompanied by the requisite basic national fee, an English translation of the International Application; a First preliminary amendment and an unexecuted combined declaration and power of attorney.

On 21 August 2003, applicant was mailed a "NOTIFICATION OF MISSING REQUIREMENTS UNDER 35 U.S.C. 371" (Form PCT/DO/EO/905) informing applicant of the need to provide an executed oath or declaration of the inventors, in compliance with 37 CFR 1.497(a) and (b), identifying the application by the International application number and international filing date. Applicant was afforded two months to file the proper reply and informed that this period could be extended pursuant to 37 CFR 1.136(a).

On 17 October 2003, applicant filed the present response which included a combined declaration and power of attorney executed by joint inventors Joachim Winter, Gerhard Mack, Christoph Buehler, Friedrich Moser, Thomas Kuegler, Philippe Allio and Peter Boehland. In addition, the declaration and power of attorney was executed by Maike Sander-Potz as an heir to the estate of deceased inventor Detlev Potz.

DISCUSSION

Pursuant to 37 CFR 1.42, first sentence:

"In case of the death of the inventor, the legal representative (executor, administrator, etc.) of the deceased inventor may make the necessary oath or declaration, and apply for and obtain a patent."

The declaration filed 17 October 2003 is executed by Maike Sander-Potz as one of the heirs to the estate of deceased inventor Detlev Potz. Applicant is advised that while the filed translation of inheritance certificate states that Maike Sander-Potz and Wendelin Potz are each entitled to one half of the estate, neither the declaration nor the transmittal letter declares that they are all the heirs of the deceased. As such, the declaration can not be accepted at this time. Applicant is required to file a statement either from the heirs themselves or applicant's counsel setting forth that the individuals listed above represent all of the heirs of the deceased inventor, Detlev Potz. In addition, said statement should set forth that no legal representative of the deceased's estate has been appointed or is statutorily required to be appointed. In addition, the declaration is not in compliance with 37 CFR 1.497 (a)-(b) in that the declaration does not appear to set forth the residence, post office address and country of citizenship of Wendelin Potz as required under 37 CFR 1.497(b). The information must be provided for both the deceased joint inventor, Detlev Potz and the surviving heirs. The filed declaration only provides the citizenship for two individuals (See 37 CFR 1.63).

CONCLUSION

Applicants' petition under 37 CFR 1.42 is **DISMISSED, without prejudice**.

Applicants are hereby afforded **TWO (2) MONTHS** from the mail date of this decision to file an oath or declaration in compliance with 37 CFR 1.497 (a)-(b). Any reconsideration request should include a cover letter entitled, "Renewed Petition Under 37 CFR 1.42." No additional petition fee is required. Extensions of time may be obtained under 37 CFR 1.136(a).

Any further correspondence with respect to this matter should be directed to Mail Stop PCT, Commissioner for Patents, Office of PCT Legal Administration, P.O. Box 1450, Alexandria, Virginia 22313-1450, with the contents of the letter marked to the attention of the Office of PCT Legal Administration.

Derek A. Putonen
Attorney Advisor
Office of PCT Legal Administration
Tel: 703-305-0130
Fax: 703-308-6459

27 MAY 2004

#6

UNITED STATES PATENT AND TRADEMARK OFFICE

COMMISSIONER FOR PATENTS
UNITED STATES PATENT AND TRADEMARK OFFICE
P.O. BOX 1450
ALEXANDRIA, VA 22313-1450
www.uspto.gov

Ronald E. Greigg
Greigg & Greigg, P.L.L.C.
1423 Powhatan Street, Suite One
Alexandria, VA 22314

In re Application of	:	
WINTER, et al.	:	
Application No.: 10/415,087	:	
PUT No.: PCT/DE02/03140	:	DECISION ON PETITION
Int. Filing Date: 23 August 2002	:	
Priority Date: 25 August 2001	:	UNDER 37 CFR 1.42
Attorney Docket No.: R.41425	:	
For: FUEL INJECTION SYSTEM FOR AN	:	
INTERNAL COMBUSTION ENGINE	:	

This decision is in response to applicant's "Renewed Petition Under 37 CFR 1.42" filed 26 April 2004 in the United States Patent and Trademark Office (USPTO).

BACKGROUND

On 05 November 2003, applicant was mailed a decision dismissing applicant's request for status under 37 CFR 1.42. Applicant was afforded two months to file any request for reconsideration and advised that this period could be extended pursuant to 37 CFR 1.136(a).

On 26 April 2004, applicant filed the present renewed petition under 37 CFR 1.42 accompanied by a petition for a four-month extension of time and payment of the appropriate extension of time fee. As such, applicant's renewed petition is timely filed.

DISCUSSION

As detailed in the decision mailed 05 November 2003, 37 CFR 1.42, first sentence:

"In case of the death of the inventor, the legal representative (executor, administrator, etc.) of the deceased inventor may make the necessary oath or declaration, and apply for and obtain a patent."

A review of the presently filed papers finds that applicant has submitted a compliant combined declaration and power of attorney. The declaration is executed Maike-Sander Potz as one heir to the estate of deceased inventor, Detlev Potz. In addition, Maike-Sander Potz has executed the declaration on behalf of the minor heir, Wendelin Potz. The declaration provides the

residence, postal address and citizenship for both of the heirs, as well as that of the deceased inventor. Finally, Maike-Sander Potz has stated that she and Wendelin Potz are entitled to ½ of the estate and thus are all of the heirs of the deceased. Therefore, it is appropriate to grant applicant's renewed request at this time.

CONCLUSION

Applicant's renewed request for status under 37 CFR 1.42 is **GRANTED**.

This application will be given an international application filing date of 23 August 2002 and a date of **26 April 2004** under 35 U.S.C. 371.

This application is being returned to the DO/EO/US for processing in accordance with this decision.

Derek A. Putonen
Attorney Advisor
Office of PCT Legal Administration
Tel: 703-305-0130
Fax: 703-308-6459

21 OCT 2003

#5

UNITED STATES PATENT AND TRADEMARK OFFICE

COMMISSIONER FOR PATENTS
UNITED STATES PATENT AND TRADEMARK OFFICE
P.O. BOX 1450
ALEXANDRIA, VA 22313-1450
www.uspto.gov

Mel R. Quintos
Armstrong, Westerman & Hattori, LLP
1725 K Street, N.W., Suite 1000
Washington, D.C. 20006

In re Application of	:	
IIDA, et al.	:	
U.S. Application No.: 10/415,097	:	DECISION ON PETITION
PCT No.: PCT/JP02/07771	:	
Int. Filing Date: 31 July 2002	:	UNDER 37 CFR 1.182
Priority Date: 30 August 2001	:	
Attorney Docket No.: 030503	:	
For: LINEAR ACTUATOR	:	

This decision is in response to applicant's "Response to Notice of Missing Requirements And Petition Under 37 CFR 1.182" filed 10 September 2003 in the United States Patent and Trademark Office (USPTO). Applicant has provided payment of the $130.00 petition fee.

BACKGROUND

On 31 July 2002, applicant filed international application PCT/JP02/07771 which claimed priority to a Japanese application filed 05 March 1999. A copy of the international application was communicated to the United States Patent and Trademark Office from the International Bureau on 13 March 2003. Pursuant to 37 CFR 1.495, the deadline for payment of the basic national fee in the United States was to expire 30 months from the priority date, 30 February 2004.

On 30 April 2003, applicant filed a transmittal letter for entry into the national stage in the United States, which was accompanied by the requisite basic national fee as required by 35 U.S.C. 371(c)(1); a translation of the International Application into English and an executed declaration.

On 10 July 2003, applicant was mailed a NOTIFICATION OF MISSING REQUIREMENTS UNDER 35 U.S.C. 371 (Form PCT/DO/EO/905) informing applicant of the need to provide an oath or declaration of the inventors, in compliance with 37 CFR 1.497(a) and (b), identifying the application by the International application number and international filing date. Applicant was advised that the spelling of the second named inventor was different from the spelling of the inventor on the published International Application. Applicant was given two months to respond and advised that this time period could be extended with a proper petition and payment of fees.

On 10 September 2003, applicant filed the present petition under 37 CFR 1.182.

DISCUSSION

The Manual of Patent Examining Procedure at § 605.04(c) requires in instances where an inventor has changed his or her name after the application has been filed to submit a petition under 37 CFR 1.182. The petition must include the appropriate petition fee and an affidavit signed with both names setting forth the procedure whereby the change of name was effected, or certified copy of the court order. Applicant has not included an affidavit executed by inventor KADONO with both names. As such, it is not possible to grant applicant's petition under 37 CFR 1.182 at this time.

It appears from applicant's present filing that the name change was effected in the international stage by filing a request with the Japanese Patent Office acting as the receiving office. Thus, as an alternative to applicant providing an affidavit signed with both names setting forth the procedure whereby the change of name was effected, or certified copy of the court order, applicant may provide a showing that a change was effected under PCT Rule 92bis during the international stage, i.e. a copy of the form PCT/IB/306.

CONCLUSION

For the reasons above, applicant's petition under 37 CFR 1.182 is **DISMISSED**.

Any reconsideration on the merits of this petition must be filed within **TWO (2) MONTHS** from the mail date of this decision. Any reconsideration request should include a cover letter entitled "Renewed Petition Under 37 CFR 1.182."

Any further correspondence with respect to this matter should be directed to Mail Stop PCT, Commissioner for Patents, Office of PCT Legal Administration, P.O. Box 1450, Alexandria, Virginia 22313-1450, with the contents of the letter marked to the attention of the Office of PCT Legal Administration.

Derek A. Putonen
Attorney Advisor
Office of PCT Legal Administration
Tel: 703-305-0130
Fax: 703-308-6459

06 JAN 2004

#7

UNITED STATES PATENT AND TRADEMARK OFFICE

COMMISSIONER FOR PATENTS
UNITED STATES PATENT AND TRADEMARK OFFICE
P.O. BOX 1450
ALEXANDRIA, VA 22313-1450
www.uspto.gov

Stephen G. Adrian
Westerman, Hattori, Daniels & Adrian, LLP
1250 Connecticut Avenue, N.W.
Suite 700
Washington, D.C. 20036

In re Application of	:	
IIDA, et al.	:	
U.S. Application No.: 10/415,097	:	DECISION ON RENEWED
PCT No.: PCT/JP02/07771	:	
Int. Filing Date: 31 July 2002	:	PETITION UNDER
Priority Date: 30 August 2001	:	
Attorney Docket No.: 030503	:	37 CFR 1.182
For: LINEAR ACTUATOR	:	

This decision is in response to applicant's "Renewed Petition Under 37 CFR §1.182" filed 22 December 2003 in the United States Patent and Trademark Office (USPTO).

BACKGROUND

On 21 October 2003, applicant was mailed a decision dismissing applicant's petition under 37 CFR 1.182. Applicant was afforded two months to file any request for reconsideration.

On 22 December 2003, applicant filed the present renewed petition under 37 CFR 1.182 which included a copy of Form PCT/IB/306 showing that the name of inventor KADONO was changed in the international stage. 21 December 2003 being a Sunday, the renewed petition is considered timely filed.

DISCUSSION

Applicant has presently provided evidence that inventor KADONO's first name is in fact Toshiaki, as appears on the declaration filed 30 April 2003. As such it is proper to hold the declaration as compliant with 37 CFR 1.497(a)-(b). Further, a review of the application file reveals that all of the requirements of 35 U.S.C. 371 for entry into the national stage in the United States have been satisfied.

CONCLUSION

For the reasons discussed above, the renewed petition under 37 CFR 1.182 is **GRANTED**.

As discussed above, a review of the application papers reveals that applicant has now completed all the requirements of 35 U.S.C. 371 for entry into the national stage. This application will be given an international application filing date of **31 July 2002** and a date of **30 April 2003** under 35 U.S.C. 371.

The application is being returned to the United States Designated/Elected Office for further processing in accordance with this decision

Derek A. Putonen
Attorney Advisor
Office of PCT Legal Administration
Tel: 703-305-0130
Fax: 703-308-6459

UNITED STATES PATENT AND TRADEMARK OFFICE

Commissioner for Patents
United States Patent and Trademark Office
P.O. Box 1450
Alexandria, VA 22313-1450
www.uspto.gov

BIRCH STEWART
KOLASCH & BIRCH
PO BOX 747
FALLS CHURCH VA 22040-0747

COPY MAILED
FEB 18 2009
OFFICE OF PETITIONS

In re Application of	:	
Degen, et al.	:	
Application No. 10/415,144	:	DECISION
Filed: 25 April, 2003	:	
Attorney Docket No. 3868-0137P	:	

This is a decision on the papers considered as a petition filed on 20 November, 2008, to expunge from the application certain materials under the provisions of 37 C.F.R. §1.59.

The (papers considered as a) petition to expunge under 37 C.F.R. §1.59 is **DISMISSED**.

The conditions for a petition pursuant to 37 C.F.R. §1.59 are set forth in the regulation, to wit:

> **§ 1.59 Expungement of information or copy of papers in application file.**
> (a)...
>
> (1) Information in an application will not be expunged, except as provided in paragraph (b) of this section or §41.7(a) of this title.
> (2)Information forming part of the original disclosure (*i.e.*, written specification including the claims, drawings, and any preliminary amendment specifically incorporated into an executed oath or declaration under §§1.63 and 1.175) will not be expunged from the application file.
>
> (b)An applicant may request that the Office expunge information, other than what is excluded by paragraph (a)(2) of this section, by filing a petition under this paragraph. Any petition to expunge information from an application must include the fee set forth in §1.17(g) and establish to the satisfaction of the Director that the expungement of the information is appropriate in which case a notice granting the petition for expungement will be provided.
>
> (c)Upon request by an applicant and payment of the fee specified in §1.19(b), the Office will furnish copies of an application, unless the application has been disposed of (*see* §§1.53(e), (f) and (g)). The Office cannot provide or certify copies of an application that has been disposed of.

Guidance in this matter is set forth at MPEP §724.05 and §724.06. The guidance at MPEP §724.05 provides in pertinent part:

724.05 Petition To Expunge Information or Copy of Papers in Application File [R-6]

I. INFORMATION SUBMITTED UNDER MPEP §724.02

A petition under 37 C.F.R. §1.59(b) to expunge information submitted under MPEP §724.02, or that should have been submitted under MPEP §724.02 (as where proprietary information is submitted in an information disclosure statement but inadvertently not submitted in a sealed envelope as discussed in MPEP §724.02) will be entertained only if the petition fee (37 C.F.R. §1.17(g)) is filed and the information has been found *not* to be **>material to< patentability. If the information is found to be **>material to< patentability, any petition to expunge the information will be denied. Any such petition to expunge information submitted under MPEP §724.02 should be submitted at the time of filing the information under MPEP §724.02 and directed to the Technology Center (TC) to which the application is assigned. Such petition must contain:

(A) a clear identification of the information to be expunged without disclosure of the details thereof;
(B) a clear statement that the information to be expunged is trade secret material, proprietary material, and/or subject to a protective order, and that the information has not been otherwise made public;
(C) a commitment on the part of the petitioner to retain such information for the period of any patent with regard to which such information is submitted;
(D) a statement that the petition to expunge is being submitted by, or on behalf of, the party in interest who originally submitted the information;
(E) the fee as set forth in 37 C.F.R. §1.17(g) for a petition under 37 C.F.R. §1.59(b).

Any such petition to expunge should accompany the submission of the information and, in any event, must be submitted in sufficient time that it can be acted on prior to the mailing of a notice of allowability or a notice of abandonment for original and reissue applications, or prior to>, or shortly after (i.e., in time to be addressed before the reexamination proceeding enters the reexamination certificate printing process),< the mailing of a Notice of Intent to Issue Reexamination Certificate (NIRC) for reexamination proceedings. Timely submission of the petition is, accordingly, extremely important. If the petition does not accompany the information when it is initially submitted, the petition should be submitted while the application or reexamination is pending in the Technology Center (TC) and before it is transmitted to the Publishing Division. If a petition to expunge is not filed prior to the mailing of a notice of allowability or a notice of abandonment for original and reissue applications, or prior to>,

or shortly after (i.e., in time to be addressed before the reexamination proceeding enters the reexamination certificate printing process),< the mailing of a NIRC for reexamination proceedings, any material then in the file will remain therein and be open to the public in accordance with 37 C.F.R. §1.14. Accordingly, it is important that both the submission of any material under MPEP §724.02and the submission of any petition to expunge occur as early as possible during the examination process. The decision will be held in abeyance and be decided upon the close of prosecution on the merits.

II. INFORMATION UNINTENTIONALLY SUBMITTED IN APPLICATION

A petition to expunge information unintentionally submitted in an application (other than information forming part of the original disclosure) may be filed under 37 C.F.R. §1.59(b), provided that:

> (A) the Office can effect such return prior to the issuance of any patent on the application in issue;
> (B) it is stated that the information submitted was unintentionally submitted and the failure to obtain its return would cause irreparable harm to the party who submitted the information or to the party in interest on whose behalf the information was submitted;
> (C) the information has not otherwise been made public;
> (D) there is a commitment on the part of the petitioner to retain such information for the period of any patent with regard to which such information is submitted;
> (E) it is established to the satisfaction of the Director that the information to be returned is not material information under 37 C.F.R. §1.56; and
> (F) the petition fee as set forth in 37 C.F.R. §1.17(g) is included.

A request to expunge information that has not been clearly identified as information that may be later subject to such a request by marking and placement in a separate sealed envelope or container shall be treated on a case-by-case basis. Applicants should note that unidentified information that is a trade secret, proprietary, or subject to a protective order that is submitted in an Information Disclosure Statement may inadvertently be placed in an Office prior art search file by the examiner due to the lack of such identification and may not be retrievable.

***

BACKGROUND

The record reflects as follows:

The Examiner mailed a non-final Office action mailed on 16 May, 2008, with reply due absent extension of time on or before 16 August, 2008.

On 13 November, 2008, Petitioner filed a reply in the form of an amendment, a request and fee for a two- (2-) month extension of time (insufficient to make the reply timely), and an authorization to charge to a deposit account any necessary fees.[1]

Petitioner filed a petition with fee pursuant to 37 C.F.R. §1.137(b), averring unintentional delay, on 20 November, 2008, a reply in the form of an amendment, and made the statement of unintentional delay. Petitioner also:

- Averred that the papers submitted on 13 November, 2008, were improvidently filed amendment papers for another application, and, thus, were not the proper reply to the Examiner's Office action of 16 May, 2008; and

- Sought also the expungement of the improvidently filed amendment papers of 13 November, 2008, however, this was included in papers submitted in support of the petition, not in a separate paper as required by the provisions of 37 C.F.R. §1.4(c).

With regard to 37 C.F.R. §1.4(c), Petitioner is reminded that the rule provides:

***

> (c) Since different matters may be considered by different branches or sections of the United States Patent and Trademark Office, each distinct subject, inquiry or order must be contained in a separate paper to avoid confusion and delay in answering papers dealing with different subjects.

***

With regard to 37 C.F.R. §1.59, the provisions of the rule are set forth above, as is the guidance provided in the Commentary at MPEP §724.05. (See also MPEP §724.06.)

---

[1] It appears that the Office in fact acted on Petitioner's authorization to charge the deposit account for any necessary fees (mentioned above) and properly interpreted Petitioner's request as one for the requisite three- (3-) month extension of time—thus, Petitioner's 13 November, 2008, reply was considered timely. However, the reply was not proper as required under the provisions of 37 C.F.R. §1.135(b), to wit:

***

> (b) Prosecution of an application to save it from abandonment pursuant to paragraph (a) of this section must include such complete and proper reply as the condition of the application may require. The admission of, or refusal to admit, any amendment after final rejection or any amendment not responsive to the last action, or any related proceedings, will not operate to save the application from abandonment. (Emphasis supplied.)

***

Thus, Petitioner failed to reply timely and properly to the non-final Office action of 156 May, 2008.

The application went abandoned by operation of law after midnight 16 November, 2008.

Petitioner has failed to satisfy the requirement that Petitioner make the affirmative showings as set forth in the guidance at MPEP §724.05(I) items (A) through (E) (and/or MPEP §724.05(II) items (A) through (F), as applicable).

(The Office will not return documents from a/the physical file because it is Office policy not to remove paper from files that have been scanned. Even if a petition "to expunge" is granted as to one or more documents with regard to an application or patent, the image of the recorded document will remain in the records of the Office. However, the Office will close the images in the application or patent that was the subject of the petition so that no information about the recorded document will appear when someone searches for the application or patent number in the electronic file.)

The availability of applications and application papers online to applicants/practitioners who diligently associate their Customer Number with the respective application(s) now provides an applicant/practitioner on-demand information as to events/transactions in an application.

Out of an abundance of caution, Petitioners always are reminded that those registered to practice *and* all others who make representations before the Office must inquire into the underlying facts of representations made to the Office and support averments with the appropriate documentation–since all owe to the Office the continuing duty to disclose.[2]

CONCLUSION

The petition to expunge under 37 C.F.R. §1.59 is **DISMISSED**.

---

[2] See supplement of 17 June, 1999. The Patent and Trademark Office is relying on petitioner's duty of candor and good faith and accepting a statement made by Petitioner. See Changes to Patent Practice and Procedure, 62 Fed. Reg. at 53160 and 53178, 1203 Off. Gaz. Pat. Office at 88 and 103 (responses to comments 64 and 109)(applicant obligated under 37 C.F.R. §10.18 to inquire into the underlying facts and circumstances when providing statements to the Patent and Trademark Office). See specifically, the regulations at 37 C.F.R. §10.18.

Telephone inquiries regarding this decision may be directed to the undersigned at (571) 272-3214—it is noted, however, that all practice before the Office is in writing (see: 37 C.F.R. §1.2[3]) and the proper authority for action on any matter in this regard are the statutes (35 U.S.C.), regulations (37 C.F.R.) and the commentary on policy (MPEP). Therefore, no telephone discussion may be controlling or considered authority for Petitioner's action(s).

/John J. Gillon, Jr./
John J. Gillon, Jr.
Senior Attorney
Office of Petitions

[3] The regulations at 37 C.F.R. §1.2 provide:
§1.2 Business to be transacted in writing.
All business with the Patent and Trademark Office should be transacted in writing. The personal attendance of applicants or their attorneys or agents at the Patent and Trademark Office is unnecessary. The action of the Patent and Trademark Office will be based exclusively on the written record in the Office. No attention will be paid to any alleged oral promise, stipulation, or understanding in relation to which there is disagreement or doubt.

UNITED STATES PATENT AND TRADEMARK OFFICE

Commissioner for Patents
United States Patent and Trademark Office
P.O. Box 1450
Alexandria, VA 22313-1450
www.uspto.gov

BIRCH STEWART
KOLASCH & BIRCH
PO BOX 747
FALLS CHURCH VA 22040-0747

COPY MAILED

FEB 18 2009

OFFICE OF PETITIONS

In re Application of	:	
Degen, et al.	:	
Application No. 10/415,144	:	DECISION
Filed: 25 April, 2003	:	
Attorney Docket No. 3868-0137P	:	

This is a decision on the petition filed on 20 November, 2008, considered as a petition under 37 C.F.R. §1.137(b) to revive the application as having been abandoned due to unintentional delay.

The petition under 37 C.F.R. §1.137(b) is **GRANTED**.

As to Allegations of
Unintentional Delay

The requirements of a grantable petition pursuant to 37 C.F.R. §1.137(b) are the petition and fee therefor, a reply, a proper statement of unintentional delay under the regulation, and, where applicable, a terminal disclaimer and fee. (However, it does not appear that a terminal disclaimer and fee are due here.)

BACKGROUND

The record reflects as follows:

The Examiner mailed a non-final Office action on 16 May, 2008, with reply due absent extension of time on or before 16 August, 2008.

On 13 November, 2008, Petitioner filed a reply in the form of an amendment, a request and fee for a two- (2-) month extension of time (insufficient to make the reply timely), and an authorization to charge to a deposit account any necessary fees.

It does not appear that the Office mailed a Notice of Abandonment before the instant petition was filed.

Petitioner filed the instant petition with fee pursuant to 37 C.F.R. §1.137(b), averring unintentional delay, on 20 November, 2008, a reply in the form of an amendment, and made the statement of unintentional delay. Petitioner also:

- Avers that the papers submitted on 13 November, 2008, were improvidently filed amendment papers for another application, and, thus, were not the proper reply to the Examiner's Office action of 16 May, 2008; and

- Seeks also the expungement of the improvidently filed amendment papers of 13 November, 2008, however, this was included in papers submitted in support of the petition, not in a separate paper as required by the provisions of 37 C.F.R. §1.4(c).

It appears that the Office in fact acted on Petitioner's authorization to charge the deposit account for any necessary fees (mentioned above) and properly interpreted Petitioner's request as one for the requisite three- (3-) month extension of time—thus, Petitioner's 13 November, 2008, reply was considered timely. However, the reply was not proper as required under the provisions of 37 C.F.R. §1.135(b), to wit:

***

> (b) Prosecution of an application to save it from abandonment pursuant to paragraph (a) of this section <u>must include such complete and proper reply as the condition of the application may require</u>. The admission of, or refusal to admit, any amendment after final rejection or any amendment not responsive to the last action, or any related proceedings, will not operate to save the application from abandonment. (Emphasis supplied.)

***

Thus, Petitioner failed to reply timely <u>and properly</u> to the non-final Office action of 156 May, 2008.

The application went abandoned by operation of law after midnight 16 November, 2008.

With regard to 37 C.F.R. §1.4(c), Petitioner is reminded that the rule provides:

***

> (c) Since different matters may be considered by different branches or sections of the United States Patent and Trademark Office, each distinct subject, inquiry or order must be contained in a separate paper to avoid confusion and delay in answering papers dealing with different subjects.

***

With regard to 37 C.F.R. §1.59, Petitioner is reminded that the rule provides:

> **§ 1.59 Expungement of information or copy of papers in application file.**
> (a)(1) Information in an application will not be expunged, except as provided in paragraph (b) of this section or §41.7(a) of this title.
> (2) Information forming part of the original disclosure (*i.e.*, written specification including the claims, drawings, and any preliminary amendment specifically incorporated into an executed oath or declaration under §§1.63 and 1.175) will not be expunged from the application file.
> (b) An applicant may request that the Office expunge information, other than what is excluded by paragraph (a)(2) of this section, by filing a petition under this paragraph. Any petition to expunge information from an application must include the fee set forth in §1.17(g) and establish to the satisfaction of the Director that the expungement of the information is appropriate in which case a notice granting the petition for expungement will be provided.
> (c) Upon request by an applicant and payment of the fee specified in §1.19(b), the Office will furnish copies of an application, unless the application has been disposed of (*see* §§1.53(e), (f) and (g)). The Office cannot provide or certify copies of an application that has been disposed of.

Petitioner's attentions further are directed to the guidance provided in the Commentary at MPEP §724.05 and §724.06—and Petitioner should plan to satisfy the showings outlined therein.

Thus, the issue of expungement is properly addressed and will be addressed separately from the instant petition.

The availability of applications and application papers online to applicants/practitioners who diligently associate their Customer Number with the respective application(s) now provides an applicant/practitioner on-demand information as to events/transactions in an application.

Out of an abundance of caution, Petitioners always are reminded that those registered to practice and all others who make representations before the Office are reminded to inquire into the underlying facts of representations made to the Office and support averments with the appropriate documentation–since all owe to the Office the continuing duty to disclose.[1]

STATUTES, REGULATIONS AND ANALYSIS

[1] See supplement of 17 June, 1999. The Patent and Trademark Office is relying on petitioner's duty of candor and good faith and accepting a statement made by Petitioner. See Changes to Patent Practice and Procedure, 62 Fed. Reg. at 53160 and 53178, 1203 Off. Gaz. Pat. Office at 88 and 103 (responses to comments 64 and 109)(applicant obligated under 37 C.F.R. §10.18 to inquire into the underlying facts and circumstances when providing statements to the Patent and Trademark Office).

Congress has authorized the Commissioner to "revive an application if the delay is shown to the satisfaction of the Commissioner to have been "unavoidable." 35 U.S.C. §133 (1994).[2]
The regulations at 37 C.F.R. §1.137(a) and (b) set forth the requirements for a Petitioner to revive a previously unavoidably or unintentionally, respectively, abandoned application under this congressional grant of authority.

Unintentional delays are those that do not satisfy the very strict statutory and regulatory requirements of unavoidable delay, and also, by definition, are not intentional.[3]))

As to Allegations of
Unintentional Delay

The requirements under 37 C.F.R. §1.137(b) have been satisfied.

CONCLUSION

Accordingly, The petition under 37 C.F.R. §1.137(b) is **granted**.

The instant application is released to Technology Center/AU (TC/AU) 1616 for further processing in due course.

Petitioner may find it beneficial to view Private PAIR within a fortnight of the instant decision to ensure that the revival has been acknowledged by the TC/AUin response to this decision. It is noted that all inquiries with regard to that change in status need be directed to the TC/AU where that change of status must be effected—that does not occur in the Office of Petitions.

---

[2] 35 U.S.C. §133 provides:
35 U.S.C. §133 Time for prosecuting application.
Upon failure of the applicant to prosecute the application within six months after any action therein, of which notice has been given or mailed to the applicant, or within such shorter time, not less than thirty days, as fixed by the Commissioner in such action, the application shall be regarded as abandoned by the parties thereto, unless it be shown to the satisfaction of the Commissioner that such delay was unavoidable.

[3] Therefore, by example, an unintentional delay in the reply might occur if the reply and transmittal form are to be prepared for shipment by the US Postal Service, but other pressing matters distract one's attention and the mail is not timely deposited for shipment.

Telephone inquiries regarding this decision may be directed to the undersigned at (571) 272-3214—it is noted, however, that all practice before the Office is in writing (see: 37 C.F.R. §1.2[4]) and the proper authority for action on any matter in this regard are the statutes (35 U.S.C.), regulations (37 C.F.R.) and the commentary on policy (MPEP). Therefore, no telephone discussion may be controlling or considered authority for Petitioner's action(s).

/John J. Gillon, Jr./
John J. Gillon, Jr.
Senior Attorney
Office of Petitions

[4] The regulations at 37 C.F.R. §1.2 provide:
§1.2 Business to be transacted in writing.
All business with the Patent and Trademark Office should be transacted in writing. The personal attendance of applicants or their attorneys or agents at the Patent and Trademark Office is unnecessary. The action of the Patent and Trademark Office will be based exclusively on the written record in the Office. No attention will be paid to any alleged oral promise, stipulation, or understanding in relation to which there is disagreement or doubt.

UNITED STATES PATENT AND TRADEMARK OFFICE

COMMISSIONER FOR PATENTS
UNITED STATES PATENT AND TRADEMARK OFFICE
P.O. BOX 1450
ALEXANDRIA, VA 22313-1450
www.uspto.gov

GREGORY J. LAVORGNA
DRINKER BIDDLE & REATH LLP
ONE LOGAN SQUARE
18TH AND CHERRY STREETS
PHILADELPHIA, PA 19103

COPY MAILED

DEC 1 0 2003

OFFICE OF PETITIONS

In re Application of
Ian Donald
Application No. 10/415,156
Filed: April 25, 2003
Attorney Docket No. 185333 (8830-204)

NOTICE

This is a notice regarding your request for acceptance of a fee deficiency submission under 37 CFR 1.28. On September 1, 1998, the Court of Appeals for the Federal Circuit held that 37 CFR 1.28(c) is the sole provision governing the time for correction of the erroneous payment of the issue fee as a small entity. **See DH Technology v. Synergystex International, Inc. 154 F.3d 1333, 47 USPQ2d 1865 (Fed. Cir. Sept. 1, 1998).**

The Office no longer investigates or rejects original or reissue applications under 37 CFR 1.56. **1098 Off. Gaz. Pat. Office 502 (January 3, 1989).** Therefore, nothing in this Notice is intended to imply that an investigation was done.

Your fee deficiency submission under 37 CFR 1.28 is hereby **ACCEPTED**.

Inquiries related to this communication should be directed to the Office of Petitions Staff at (703) 305-9285.

Further correspondence with respect to this matter should be addressed as follows:

By mail: Mail Stop PETITION
Commissioner for Patents
Post Office Box 1450
Alexandria, VA 22313-1450

Effective December 1, 2003, the Office of Petitions can no longer receive hand-carried correspondence, or facsimile transmissions of correspondence. The centralized location for hand-carried correspondence is the Customer Window located at:

2011 South Clark Place
Crystal Plaza Two, Lobby
Arlington, VA 22202

The centralized facsimile number is **(703) 872-9306.**

This file is being forwarded to Technology Center AU 3672.

Irvin Dingle
Petitions Examiner
Office of Petitions
Office of the Deputy Commissioner
for Patent Examination Policy

21 NOV 200

JPF

UNITED STATES PATENT AND TRADEMARK OFFICE

COMMISSIONER FOR PATENTS
UNITED STATES PATENT AND TRADEMARK OFFICE
P.O. BOX 1450
ALEXANDRIA, VA 22313-1450
www.uspto.gov

* No Docketing Required *
Reviewed By Practice Systems
Initials: JMB
Reviewed By Docketing Secretary
Initials: HRM

RECEIVED
NOV 24 2003
FISH & RICHARDSON, P.C.
BOSTON OFFICE

FISH & RICHARDSON PC
225 FRANKLIN ST
BOSTON, MA 02110

In re Application of
BOAS et al.
Serial No.: 10/415,163
PCT No.: PCT/US01/02646
Int. Filing Date: 26 January 2001
Priority Date: 28 January 2000
Attorney's Docket No.: 00786-447US1
For: FETAL PULSE OXIMETRY

DECISION ON PETITION

UNDER 37 CFR 1.137(b)

The petition to revive under 37 CFR 1.137(b) filed 25 April 2003 in the above-captioned application is hereby **GRANTED** as follows:

Applicant's statement that the "entire period of delay in filing the National Phase filing of PCT application No. PCT/US01/02646 from June 28, 2002 until the filing of a grantable petition under 37 CFR 1.137(b) was unintentional" has been interpreted as meaning that "entire delay in filing the required reply from the due date for the reply until the filing of this petition under 37 CFR 1.137(b) was unintentional" as required by 37 CFR 1.137(b)(3) at the time of filing this petition. If this is an incorrect interpretation in view of the rules, petitioner is required to promptly notify this office.

A review of the application file reveals that the basic national fee of $50 has been paid. The required petition fee of $650 has also been paid. Thus, the requirements of 37 CFR 1.137(b) have been satisfied. Therefore, the request to revive the application abandoned under 35 U.S.C. 371(d) is granted as to the National stage in the United States of America.

The declaration filed on 25 April 2003 contains duplicate page 2s. Section 201.03 of the MPEP states, in pertinent part,:

> An oath or declaration under 37 CFR 1.63 by each actual inventor must be presented. While each inventor need not execute the same oath or declaration, each oath or declaration executed by an inventor must contain a complete listing of all inventors so as to clearly indicate what each inventor believes to be the appropriate inventive entity. Where individual declarations are executed, they must be submitted as individual declarations rather than combined into one declaration. For example, where the inventive entity is A and B, a declaration may not be executed only by A naming only A as the inventor and a different declaration may not be executed only by B naming only B as the inventor, which two declarations are then combined into one declaration with a first page of boiler plate, a second page with A's signature, and a second page with B's signature (so that it appears that the declaration was executed with the entire inventive entity appearing in the declaration when it did not).

(Emphasis added.)

The declaration submitted contained two duplicate page 2 signature pages. Each page is signed by different inventors and combined into one declaration. The declaration is not properly

executed. It appears that the attorney pieced together separate complete declarations into one composite declaration or the inventors were presented with an incomplete declaration. What is required is one declaration where all inventors have signed or separate complete declarations. Thus, the requirements of 37 CFR 1.497 (a) and (b) have not been met and the declaration is unacceptable as filed.

This application is being forwarded to the United States Designated/Elected Office for further processing including issuance of a Notification of Missing Requirements indicating that a new oath or declaration executed by the inventors is required. The $65 surcharge for filing the oath or declaration after the thirty month period has been charged to applicant's deposit account per their authorization.

Cynthia M. Kratz

Cynthia M. Kratz
Attorney Advisor
PCT Legal Office

Telephone: (703) 306-5467
Facsimile: (703) 308-6459

30 SEP 20[redacted]

UNITED STATES PATENT AND TRADEMARK OFFICE

COMMISSIONER FOR PATENTS
UNITED STATES PATENT AND TRADEMARK OFFICE
ALEXANDRIA, VA 22313-1450
www.uspto.gov

Incyte Genomics, Inc.
3160 Porter Drive
Palo Alto, CA 94304

In re Application of	:	
Lal et al.	:	
Application No.: 10/415,186	:	
PCT No.: PCT/US01/44973	:	
Int. Filing Date: 30 October 2001	:	DECISION
Priority Date: 02 November 2000	:	
Attorney Docket No.: PF-0830 USN	:	
For: Enzymes Involved In Glycoprotein	:	
And Glycolipid Metabolism	:	

This is a decision on applicants' "Communication Re Inventor Name Change" filed on 23 April 2003.

BACKGROUND

This international application was filed on 30 October 2001 and claimed a priority date of 02 November 2000. A Demand electing the United States was filed prior to the elapse of 19 months from the priority date. Consequently, the thirty period for payment of the basic national fee in the United States expired as of midnight on 02 May 2003.

On 23 April 2003, applicants filed *inter alia* the basic national fee and the instant communication.

DISCUSSION

Review of the record reveals that the declaration of the inventors filed on 23 April 2003 itemizes a joint inventor, Narinder Chawla, whose name does not appear in the published international application, and that the published international application itemizes a joint inventor, Narinder Walia, whose name does not appear in the declaration of the inventors filed on 23 April 2003. The "Communication" is accompanied by a "Statement Regarding Name Change" attesting that the discrepancy arose from the inventor's name change due to marriage, and signed by the inventor as both "Narinder K. Chawla" and "Narinder K. Walia." In that this is clearly more than a mere typographic error or phonetic misspelling of applicant's name, a proper petition under 37 CFR 1.182 is required to resolve this matter. Accordingly, the$130.00 petition fee is being charged to counsel's deposit account.

CONCLUSION

The petition under 37 CFR 1.182 is **GRANTED**.

Petitioner's Deposit Account No. 09-0108 is being charged in the amount of $130.00 for the petition fee, as authorized by the "Communication..." filed on 23 April 2003.

This application is being returned to the National Stage Processing Branch for further processing. Its date under 35 U.S.C. 371(c)(1), (2) and (4) is **23 April 2003**.

Leonard Smith
PCT Legal Examiner
PCT Legal Office

George M. Dombroske
PCT Legal Examiner
PCT Legal Office
Tel: (703) 308-6721
Fax: (703) 308-6459

UNITED STATES PATENT AND TRADEMARK OFFICE

COMMISSIONER FOR PATENTS
UNITED STATES PATENT AND TRADEMARK OFFICE
P.O. BOX 1450
ALEXANDRIA, VA 22313-1450
www.uspto.gov

#3

11 AUG 2003

Donald L. Stephens, Jr.
KLARQUIST SPARKMAN, LLP
One World Trade Center, Suite 1600
121 S.W. Salmon Street
Portland, Oregon 97204-2988

In re Application of	:	
Rodney B. CROTEAU et al.	:	DECISION ON PETITION
Application No.: 10/415,197	:	
PCT No.: PCT/US00/27006	:	UNDER 37 CFR 1.137(b)
Int. Filing Date: 29 September 2000	:	
Priority Date: 30 September 1999	:	
Attorney Docket No.: 4630-65769	:	
For: TRANSACYLASES OF THE PACLITAXEL	:	
BIOSYNTHETIC PATHWAY	:	

This is in response to applicants' Petition For Revival Of Unintentionally Abandoned Application Pursuant To 37 CFR § 1.137(b) filed 24 April 2003 which is being treated as a petition under 37 CFR 1.137(b) requesting revival of an international application for patent designating the United States abandoned unintentionally. Applicants included the $1300.00 large entity petition fee.

BACKGROUND

On 29 September 2000, applicants filed international application PCT/US00/27006. A Demand for international preliminary examination, in which the United States was elected, was filed prior to the expiration of nineteen months from the priority date. Accordingly, the thirty month period for paying the basic national fee in the United States expired at midnight on 01 April 2002 (30 March 2002 being a Saturday).

On 02 April 2002, the application became abandoned for failure to pay the basic national fee in the United States.

On 24 April 2003, applicants filed in the United States Patent and Trademark Office (PTO) the instant petition. The petition included, *inter alia*, a petition fee of $1300, a national stage transmittal letter, a copy of the international application, a preliminary amendment, an

unexecuted combined declaration and power of attorney, a copy of the international search report, and national stage fees of $1320.

DISCUSSION

A petition under 37 CFR 1.137(b) requesting that the application be revived on the grounds of unintentional abandonment must be accompanied by (1) the required reply, (2) the petition fee required by law, (3) a statement that the, "entire delay in filing the required reply from the due date for the reply until the filing of a grantable petition pursuant to this paragraph was unintentional" and (4) any terminal disclaimer and fee pursuant to 37 CFR 1.137(c) (where required).

With regard to Item (1), the proper response was the payment of the basic national fee and submission of a copy of the international application as filed (if not previously transmitted by the International Bureau). A check for $1320 and a copy of the international application accompanied the instant petition.

As to Item (2), a check in the amount of the $1300 was included with the instant petition.

With regard to Item (3), applicants' petition includes the statement "(t)he entire delay from the deadline for entering the national phase under 35 U.S.C. §371 until the filing of a grantable petition under 37 C.F.R. §1.137(b) was unintentional." Applicants' statement and the prompt filing of the petition satisfies the requirement of 37 CFR 1.137(b)(3).

As to Item (4), the terminal disclaimer is not required since this application was filed after 08 June 1995.

A review of the application file reveals that all of the requirements of 37 CFR 1.137(b) for revival have been satisfied and revival is therefore appropriate. However, a review of the application file reveals that all of the requirements of 35 U.S.C. 371 for entry into the national stage in the United States have **not** been satisfied. The combined declaration and power of attorney submitted 24 April 2003 is unexecuted.

CONCLUSION

For the reasons stated above, the petition for revival is **GRANTED**.

As authorized by the general authorization to charge additional fees in applicants'

national stage transmittal letter, $130.00 will be deducted from deposit account no. 02-4550 for payment of the appropriate surcharge for providing the declaration later than 30 months from the priority date.

The application is being returned to the United States Designated/Elected Office for further processing in accordance with this decision, including the preparation and mailing of a Notification of Missing Requirements Under 35 U.S.C. 371 In The United States Designated/Elected Office (DO/EO/US) (Form PCT/DO/EO/905) requiring an oath or declaration in compliance with 37 CFR 1.497(a) and (b).

Michael A. Neas
PCT Special Program Examiner
Office of PCT Legal Administration

Boris Milef
PCT Legal Examiner
Office of PCT Legal Administration

Telephone: (703) 308-0954
Facsimile: (703) 308-6459

18 MAR 2004

#6

UNITED STATES PATENT AND TRADEMARK OFFICE

COMMISSIONER FOR PATENTS
UNITED STATES PATENT AND TRADEMARK OFFICE
P.O. BOX 1450
ALEXANDRIA, VA 22313-1450
www.uspto.gov

MERCHANT & GOULD
P.O. BOX 2903
MINNEAPOLIS, MN 55402-0903

In re Application of	:	DECISION ON
KREUTER	:	
Application No.: 10/415,199	:	PETITION UNDER
PCT No.: PCT/EP01/12308	:	
Int. Filing Date: 24 October 2001	:	37 CFR 1.47(b)
Priority Date: 24 October 2000	:	
Attorney Docket No.: 2968.249USWO	:	
For: SECURITY FEATURE	:	

This is a decision on applicant's "PETITION UNDER 37 CFR §1.47(b)" filed in the United States Patent and Trademark Office (USPTO) on 14 January 2004.

BACKGROUND

On 24 October 2001, applicants filed international application PCT/EP01/12308, which claimed a priority date of 24 October 2000. A copy of the international application was communicated to the United States Patent and Trademark Office (USPTO) from the International Bureau on 02 May 2002. The thirty-month period for paying the basic national fee in the United States expired at midnight on 24 April 2003.

On 24 April 2003, applicants filed a submission for entry into the national stage in the United States which was accompanied by, *inter alia*, the U.S. Basic National Fee and an unexecuted declaration of the inventor.

On 16 September 2003, the United States Designated/Elected Office (DO/EO/US) mailed a NOTIFICATION OF MISSING REQUIREMENTS UNDER 35 U.S.C. 371 (Form PCT/DO/EO/905) indicating, *inter alia*, that an oath or declaration of the inventor in compliance with 37 CFR 1.497(a)-(b) and the surcharge under 37 CFR 1.492(e) for providing the oath or declaration later than thirty months from the priority date were required. The NOTIFICATION set a two-month extendable period for reply.

On 14 January 2004, applicants submitted the instant petition under 37 CFR 1.47(b), which was accompanied by, *inter alia*: a petition/fee for a two-month extension of time; a declaration of inventor executed by Dennis J. Warwick as representative of the non-signing inventor; a declaration of facts from Andrea Snook; a UPS shipping label listing Mr. Kreuter as the shipper; a UPS tracking report; a copy of a translated redacted employment contract between

Mr. Kreuter and DataCard Deutschland Gmbh of Dusseldorf Germany (hereinafter "DC Germany"); a declaration of the inventor signed by Dennis J. Warwick; an authorization from a Secretary of DataCard Corporation of Minnetonka, Minnesota (hereinafter "DCC") for Dennis J. Warwick to sign on behalf of DCC.

DISCUSSION

A petition under 37 CFR 1.47(b) must be accompanied by: (1) the fee under 37 CFR 1.17(h), (2) factual proof that the inventor refuses to execute the application or cannot be reached after diligent effort, (3) a statement of the last known address of the inventor, (4) an oath or declaration by the 37 CFR 1.47(b) applicant on behalf of and as agent for the non-signing inventor, (5) proof that the 37 CFR 1.47(b) applicant has sufficient proprietary interest in the application, and (6) a showing that such action is necessary to preserve the rights of the parties or to prevent irreparable damage.

Items (1), (3), (4), and (6) have been met. Regarding item (1), the fee has been charged to deposit account 13-2725. Although the cover letter for the submission filed 14 January 2004 refers to a check for $130 for the petition fee, the petition fee was not applied to the above-identified application.

Item (2) has not been met. Copies of the application papers were sent to Mr. Kreuter at his last known address on 31 July 2003. The declaration of Andrea Snook states that Mr. Kreuter received these papers on 04 August 2003 and a copy of a UPS tracking report is provided as evidence. However, it is not clear that the UPS tracking report provided is for the correspondence mailed 31 July 2003 referred to in the declaration of Andrea Snook. For example, there is no indication that the tracking number on the UPS tracking report corresponds to the tracking number of the correspondence mailed 31 July 2003. Also, as of the date of the filing of the petition, Mr. Kreuter had not responded to the 31 July 2003 communication. However, there does not appear to have been any follow-up, either by letter or by phone, with Mr. Kreuter regarding the 31 July 2003 communication. Mr. Kreuter could have received the documents and simply forgotten about them. Although Mr. Kreuter was terminated on or about 25 April 2003 and has since sued DataCard Corporation over his termination of employment, follow-up to the 31 July 2003 communication is still required to establish a refusal to sign.

Item (5) has not been met. Translated and redacted copies of pages 1, 6, and 8 of an employment agreement between Mr. Kreuter and DC Germany have been provided. However, the translation is unsigned. A copy of the untranslated agreement has not been provided, nor has any other evidence that Mr. Kreuter actually signed the agreement. Also, it is not clear from the redacted translation whether there are any conditions on the assignment of employees' inventions besides being made during the term of employment; for example, the invention must have been made in the course of the normal duties of the employee. Additionally, when an employee agreement is relied on, it must be established by a statement of a person having firsthand

knowledge of the facts that the invention was made by the employee while employed by the 37 CFR 1.47(b) applicant. MPEP §·409.03(f).

CONCLUSION

For the above reasons, applicants' petition under 37 CFR 1.47(b) is **DISMISSED**, without prejudice.

If reconsideration on the merits of this petition is desired, a proper response must be filed within TWO (2) MONTHS from the mail date of this decision. Failure to timely file the proper response will result in abandonment of this application. Any reconsideration request should include a cover letter entitled "Renewed Petition Under 37 CFR 1.47(b)". No additional petition fee is required.

Please direct further correspondence with respect to this matter to Mail Stop PCT, Commissioner for Patents, Office of PCT Legal Administration, P.O. Box 1450, Alexandria, Virginia 22313-1450, with the contents of the letter marked to the attention of the Office of PCT Legal Administration.

Daniel Stemmer
Legal Examiner
PCT Legal Affairs
Office of Patent Cooperation Treaty
Legal Administration
Telephone: (703) 308-2066
Facsimile: (703) 308-6459

10 JAN 2005

#8

UNITED STATES PATENT AND TRADEMARK OFFICE

COMMISSIONER FOR PATENTS
UNITED STATES PATENT AND TRADEMARK OFFICE
P.O. BOX 1450
ALEXANDRIA, VA 22313-1450
www.uspto.gov

MERCHANT & GOULD
P.O. BOX 2903
MINNEAPOLIS, MN 55402-0903

In re Application of	:	DECISION ON
KREUTER	:	
Application No.: 10/415,199	:	PETITION UNDER
PCT No.: PCT/EP01/12308	:	
Int. Filing Date: 24 October 2001	:	37 CFR 1.47(b)
Priority Date: 24 October 2000	:	
Attorney Docket No.: 2968.249USWO	:	
For: SECURITY FEATURE	:	

This is a decision on applicant's "PETITION UNDER 37 CFR §1.47(b)" filed in the United States Patent and Trademark Office (USPTO) on 14 January 2004.

BACKGROUND

On 24 October 2001, applicants filed international application PCT/EP01/12308, which claimed a priority date of 24 October 2000. A copy of the international application was communicated to the United States Patent and Trademark Office (USPTO) from the International Bureau on 02 May 2002. The thirty-month period for paying the basic national fee in the United States expired at midnight on 24 April 2003.

On 24 April 2003, applicants filed a submission for entry into the national stage in the United States which was accompanied by, *inter alia*, the U.S. Basic National Fee and an unexecuted declaration of the inventor.

On 16 September 2003, the United States Designated/Elected Office (DO/EO/US) mailed a NOTIFICATION OF MISSING REQUIREMENTS UNDER 35 U.S.C. 371 (Form PCT/DO/EO/905) indicating, *inter alia*, that an oath or declaration of the inventor in compliance with 37 CFR 1.497(a)-(b) and the surcharge under 37 CFR 1.492(e) for providing the oath or declaration later than thirty months from the priority date were required. The NOTIFICATION set a two-month extendable period for reply.

On 14 January 2004, applicants submitted the instant petition under 37 CFR 1.47(b), which was accompanied by, *inter alia*: a petition/fee for a two-month extension of time; a declaration of inventor executed by Dennis J. Warwick as representative of the non-signing inventor; a declaration of facts from Andrea Snook; a UPS shipping label listing Mr. Kreuter as the shipper; a UPS tracking report; a copy of a translated redacted employment contract between

Mr. Kreuter and DataCard Deutschland Gmbh of Dusseldorf Germany (hereinafter "DC Germany"); a declaration of the inventor signed by Dennis J. Warwick; an authorization from a Secretary of DataCard Corporation of Minnetonka, Minnesota (hereinafter "DCC") for Dennis J. Warwick to sign on behalf of DCC.

On 18 March 2004, a decision was mailed dismissing applicants' petition under 37 CFR 1.47(b) without prejudice. Specifically, it was noted that applicants had not provided sufficient factual proof that the inventor could not be reached after diligent effort and that applicants had not provided sufficient proof that the 37 CFR 1.47(b) applicant has sufficient proprietary interest in the application.

On 18 August 2004, applicants submitted the instant "RENEWED PETITION UNDER 37 CFR 1.47(b)", which was accompanied by, inter alia, a petition/fee for a three month extension of time, a copy of a letter dated 20 May 2004 sent to Mr. Kreuter, a copy of a letter and an English translation of this letter from German counsel representing Mr. Kreuter dated 02 June 2004, a copy of a letter and an English translation of this letter from German counsel representing Mr. Kreuter dated 07 August 2003, a copy of a redacted German employment agreement signed by Mr. Kreuter, a redacted copy of a portion of an amended employment agreement executed on 01 May 1999, a declaration by James A. Larson, a declaration of facts by Heiner Bohnsack, and a memorandum from German counsel regarding ownership of the invention.

DISCUSSION

A petition under 37 CFR 1.47(b) must be accompanied by: (1) the fee under 37 CFR 1.17(h), (2) factual proof that the inventor refuses to execute the application or cannot be reached after diligent effort, (3) a statement of the last known address of the inventor, (4) an oath or declaration by the 37 CFR 1.47(b) applicant on behalf of and as agent for the non-signing inventor, (5) proof that the 37 CFR 1.47(b) applicant has sufficient proprietary interest in the application, and (6) a showing that such action is necessary to preserve the rights of the parties or to prevent irreparable damage.

As noted in the decision mailed 18 March 2004, items (1), (3), (4), and (6) have been met.

Item (2) has now been satisfied. The translations of the letters from German counsel representing Mr. Kreuter date 07 August 2003 and 02 June 2004 establish that Mr. Kreuter refuses to execute the application.

Item 5 has been satisfied by the legal memorandum from German counsel submitted 18 August 2004.

CONCLUSION

For the above reasons, applicants' renewed petition under 37 CFR 1.47(b) is **GRANTED**.

As provided in 37 CFR 1.47(b), a notice of the filing of this application will be forwarded to non-signing inventor at his last known address of record.

A notice of the filing of the application under 37 CFR 1.47(b) will be published in the Official Gazette.

This application is being forwarded to the National Stage Processing Branch of the Office of PCT Operations to continue national stage processing of the application, including the accordation of a 35 U.S.C. §§371(c)(1), (c)(2), and (c)(4) date of **14 January 2004**.

Daniel Stemmer
Legal Examiner
PCT Legal Affairs
Office of Patent Cooperation Treaty
Legal Administration
Telephone: (571) 272-3301
Facsimile: (571) 273-0459

10 JAN 2005

UNITED STATES PATENT AND TRADEMARK OFFICE

COMMISSIONER FOR PATENTS
UNITED STATES PATENT AND TRADEMARK OFFICE
P.O. BOX 1450
ALEXANDRIA, VA 22313-1450
www.uspto.gov

Rudiger G. Kreuter
Heinrich-Delp Str. 290
64297 Darmstadt
Germany

In re Application of
KREUTER
Application No.: 10/415,199
PCT No.: PCT/EP01/12308
Int. Filing Date: 24 October 2001
Priority Date: 24 October 2000
Attorney Docket No.: 2968.249USWO
For: SECURITY FEATURE

Dear Mr. Kreuter:

You are named as an inventor in the above-captioned United States national stage application, filed under the provisions of 37 CFR 1.47(b) and 35 U.S.C. 116. Should a patent be granted, you will be designated as an inventor.

As a named inventor, you are entitled to inspect any paper in the file wrapper of the application, order copies of all or any part thereof (at a prepaid cost per 37 CFR 1.19) or to make your position of record in the application. Alternatively, you may arrange to do any of the preceding through a registered patent agent or attorney presenting written authorization from you. Joining in the application would entail the filing of an appropriate oath or declaration by you pursuant to 37 CFR 1.63.

Daniel Stemmer
PCT Legal Examiner
PCT Legal Affairs
Office of Patent Cooperation Treaty
Legal Administration
Telephone: (571) 272-3301
Facsimile: (571) 273-0459

MERCHANT & GOULD
P.O. BOX 2903
MINNEAPOLIS, MN 55402-0903

UNITED STATES PATENT AND TRADEMARK OFFICE

Commissioner for Patents
United States Patent and Trademark Office
P.O. Box 1450
Alexandria, VA 22313-1450
www.uspto.gov

BASF CORPORATION
PATENT DEPARTMENT
1609 BIDDLE AVENUE
MAIN BUILDING
WYANDOTTE MI 48192

COPY MAILED

JAN 27 2009

OFFICE OF PETITIONS

In re Application of Christopher Hilger et al. Application No. 10/415,201 Filed: April 24, 2003 Attorney Docket No.: IN-5679	: : : : :	ON PETITION

This is a decision on the petition filed January 8, 2009, under 37 CFR 1.137(b) to revive the above-identified application.

The petition is **GRANTED**.

This application was held abandoned on November 18, 2008 and a Notice of Abandonment was sent vial email notification on December 2, 2008, for the appellant's failure to timely take action after the Board of Patent Appeals and Interferences decision rendered September 18, 2008.

In response thereof, petitioner has submitted a Request for Continued Examination (RCE) and an amendment as the submission required under 37 CFR 1.114.

This matter is being referred to Technology Center 1792 for processing of the RCE.

Telephone inquiries related to this decision should be directed to the undersigned Petitions Attorney at (571) 272-3212.

Patricia Faison-Ball

Patricia Faison-Ball
Senior Petitions Attorney
Office of Petitions

UNITED STATES PATENT AND TRADEMARK OFFICE

COMMISSIONER FOR PATENTS
UNITED STATES PATENT AND TRADEMARK OFFICE
P.O. BOX 1450
ALEXANDRIA, VA 22313-1450
www.uspto.gov

PFIZER INC.
PATENT DEPARTMENT, MS8260-1611
EASTERN POINT ROAD
GROTON, CT 06340

COPY MAILED

JAN 14 2005

OFFICE OF PETITIONS

In re Application of	:	
Pierre Bougneres	:	
Application No. 10/415,228	:	NOTICE
Filed: April 23, 2003	:	
Attorney Docket No. PC27955	:	

This is a notice regarding your request for acceptance of a fee deficiency submission under 37 CFR 1.28. On September 1, 1998, the Court of Appeals for the Federal Circuit held that 37 CFR 1.28(c) is the sole provision governing the time for correction of the erroneous payment of the issue fee as a small entity. **See DH Technology v. Synergystex International, Inc. 154 F.3d 1333, 47 USPQ2d 1865 (Fed. Cir. Sept. 1, 1998).**

The Office no longer investigates or rejects original or reissue applications under 37 CFR 1.56. **1098 Off. Gaz. Pat. Office 502 (January 3, 1989).** Therefore, nothing in this Notice is intended to imply that an investigation was done.

Your fee deficiency submission under 37 CFR 1.28 is hereby **ACCEPTED**.

Inquiries related to this communication should be directed to the Office of Petitions Staff at (571) 272-3201.

This file is being referred to Technology Center 1634 for examination in due course.

Sherry D. Brinkley
Petitions Examiner
Office of Petitions
Office of the Deputy Commissioner
for Patent Examination Policy

UNITED STATES PATENT AND TRADEMARK OFFICE

Commissioner for Patents
United States Patent and Trademark Office
P.O. Box 1450
Alexandria, VA 22313-1450
www.uspto.gov

Patent No. : 7,256,028 B2
Serial No. : 10/415,232
Inventor(s) : Winther et al.
Issued : August 14, 2007
Title : **METHODS FOR SCREENING COMPOUNDS THAT MODULATE LIPID METABOLISM**
Docket No. : **04511.0005.NPUS01**

Re: Request for Certificate of Correction

Consideration has been given your request for the issuance of a certificate of correction for the above-identified patent under the provisions of 37 CFR 1.322 and/or 1.323.

A petition under 37 CFR 3.81 must be filed and granted to fulfill your request, to date, there is no petition on record to consider your request.

Furthermore, Assignees' and/ or Co-assignees' names and addresses (assignment data) printed in a patent are based *solely* on information supplied in the appropriate space for identifying the assignment data, i.e., item 3 of the Fee(s) Transmittal Form PTOL-85B. After payment of the issue fee, correction of assignment data submitted on the PTOL-85B can only be done by Certificate of Correction under 37 CFR 1.323, which requires petition under 37 CFR 3.81(b).

A request for a patent to be corrected to state the name of the assignee must:

A. state that the assignment was submitted for recordation as set forth in 37 CFR 3.11 before issuance of the patent;
B. include a request for a certificate of correction under 37 CFR 1.323 along with the fee set forth in 37 CFR 1.20(a); and
C. include the processing fee set forth in 37 CFR 1.17(i).

If the request is granted, Certificates of Correction Branch will be notified that a Certificate of Correction may be issued.
See Manual of Patent Examining Procedure, Section 1481.01 (Rev. 3) (Oct. 2005).

Applicant has not included items B and or C above, accordingly, the request for Certificate of Correction to add or change the assignee data is dismissed.
Any request under 37 CFR 3.81(b) should be directed to the following address or facsimile number:

By mail: Mail Stop PETITIONS

Commissioner for Patents
Post Office Box 1450
Alexandria, VA 22313-1450

By hand: Customer Service Window
Mail Stop Petitions
Randolph Building
401 Dulany Street
Alexandria, VA 22314

By fax: 571-273-8300 ATTN: Office of Petitions

If a fee (currently $100) was previously submitted for consideration of a Request for Certificate of Correction, under CFR 1.323, to correct assignment data, no additional fee is required.

If, the petition under 37 CFR 1.182 (required fee currently $130), is filed and granted, the patentee would be entitled to a certificate of correction under 37 CFR 1.323 (required fee currently $100).

Ernest C. White, *LIE*
For Mary F. Diggs (703) 308-9390 x 125
Decisions & Certificates
of Correction Branch
(703) **308-9390 x 122**

IP Prosecution
Howrey Simon Arnold & White LLP
Box No. 34
1299 Pennsylvania Avenue, N.W.
Washington DC 20004-2402

ecw

UNITED STATES PATENT AND TRADEMARK OFFICE

Commissioner for Patents
United States Patent and Trademark Office
P.O. Box 1450
Alexandria, VA 22313-1450
www.uspto.gov

IP Prosecution
Howrey Simon Arnold & White LLP
Box No. 34
1299 Pennsylvania Avenue, N.W.
Washington DC 20004-2402

MAILED

JUL 13 2009

OFFICE OF PETITIONS

In re Patent No. 7,256,028 :
Issue Date: August 14, 2007 :
Application No. 10/415,232 : DECISION ON PETITION
Filed: November 24, 2003 :
Attorney Docket No. 04511.0005.NPUS01 :

This is a decision on the Request To Correct The Assignee under 37 CFR 3.81(b), filed November 6, 2008, to correct assignee's name on the PTOL-85B. The Request is being treated as a Petition. A completed Certificate of Correction Form (PTO/SB/44) was also submitted on November 6, 2008.

The petition under 37 CFR 3.81 is **GRANTED**.

Petitioner urges that the present Petition was submitted to correct the assignee's name on the previously submitted PTOL-85B and that such correction was inadvertent. Accordingly, petitioner requests, in effect, that the Title Page of the above-identified patent be corrected, via issuance of a Certificate of Correction, to correct the name of the assignee identified thereon from "Xenon Genetics Inc." to:

--Xenon Pharmaceuticals Inc.--

37 CFR 3.81(b), effective June 25, 2004, reads:

> *After payment of the issue fee:* Any request for issuance of an application in the name of the assignee submitted after the date of payment of the issue fee, and any request for a patent to be corrected to state the name of the assignee, must state that the assignment was submitted for recordation as set forth in § 3.11 before issuance of the patent, and must include a request for a certificate of correction under § 1.323 of this chapter (accompanied by the fee set forth in § 1.20(a) and the processing fee set forth in § 1.17(i) of this chapter.

The requisite $100.00 fee (Fee Code 1811) as set forth under 37 CFR 1.20(a), and the requisite $130.00 processing fee (Fee Code 1464) as set forth under 37 CFR 1.17(i) were submitted. Further, Office assignment records are consistent with the requested correction. Accordingly, since the Petition complies with the provisions of 37 CFR 3.81(b), it is appropriate for the Office to issue a Certificate of Correction in accordance with the content of the Form PTO/SB/44 that accompanied the present Petition.

Inquiries related this communication should be directed to Cheryl Gibson-Baylor at (571)272-3213.

Any questions concerning the issuance of a Certificate of Correction should be directed to the Certificates of Correction Branch at (571) 272-4200.

This matter is being referred to the Certificates of Correction Branch for processing of a Certificate of Correction in U.S. Patent No. 7,256,028.

Brian W. Brown
Petitions Examiner
Office of Petitions

UNITED STATES PATENT AND TRADEMARK OFFICE

UNITED STATES DEPARTMENT OF COMMERCE
United States Patent and Trademark Office
Address: COMMISSIONER FOR PATENTS
P.O. Box 1450
Alexandria, Virginia 22313-1450
www.uspto.gov

APPLICATION NO.	FILING DATE	FIRST NAMED INVENTOR	ATTORNEY DOCKET NO.	CONFIRMATION NO.
10/415,234	04/25/2003	Takashi Hirano	033036.064	6826

7590 04/25/2005

Smith Gambrell & Russell
Suite 800
1850 M Street NW
Washington, DC 20036

EXAMINER
CHU, JOHN S Y

ART UNIT	PAPER NUMBER
1752	

DATE MAILED: 04/25/2005

Please find below and/or attached an Office communication concerning this application or proceeding.

UNITED STATES PATENT AND TRADEMARK OFFICE

Commissioner for Patents
United States Patent and Trademark Office
P.O. Box 1450
Alexandria, VA 22313-1450
www.uspto.gov

In re Patent Application No. HIRANO ET AL.	:	
Appl No.: 10/415,234	:	**DECISION GRANTING**
Filed: April 25, 2003	:	**PETITION**
For: Positive Photosensitive Resin Composition, Process for Production of Positive Photosensitive Resin Composition, and Semiconductor	:	*37 CFR 1.48(a)*

This is a decision on the petition filed December 13, 2004 and the Supplemental declaration received February 17, 2005 to correct inventorship under 37 CFR 1.48(a).

The petition is granted.

The application file is being forwarded to the Office of Initial Patent Examination (OIPE) for correction of Office records to reflect the inventorship as corrected.

John S. Chu
Primary Patent Examiner
Art Unit 1752
Technology Center 1700

Smith Gambrell & Russell
1230 Peachtree Street, NE
Suite 3100, Promenade II
Atlanta, Georgia 30309-3592

UNITED STATES PATENT AND TRADEMARK OFFICE

Commissioner for Patents
United States Patent and Trademark Office
P.O. Box 1450
Alexandria, VA 22313-1450
www.uspto.gov

JJGJr: 03-06

Paper No: __

AIR LIQUIDE
INTELLECTUAL PROPERTY DEPARTMENT
2700 POST OAK BLVD, STE. 1800
HOUSTON TX 77056

COPY MAILED

APR 17 2006

OFFICE OF PETITIONS

In re Application of	:	
Guillaume	:	
Application No. 10/415,236	:	ON PETITION
Filed: 25 April, 2003	:	
Attorney Docket No.: Serie 5241	:	

This is a decision on the petition filed on 22 March, 2006, alleging unintentional delay under 37 C.F.R. §1.137(b), and, in light of allegations and request, considered as a request to withdraw the holding of abandonment under 37 C.F.R. §1.181.

For the reasons set forth below, the petition as considered under 37 C.F.R. §1.181 is **DISMISSED**, and the petition under 37 C.F.R. §1.137(b) is **GRANTED**.

BACKGROUND

It appears that:

- Petitioner failed to respond timely and properly to the non-final Office action mailed on 29 June, 2004, with reply due absent extension of time on or before 29 September, 2004;
- the instant application went abandoned after midnight 29 September, 2004;
- Petitioner filed a reply in the form of the amendment on 14 December, 2005, and averred timely reply in October 2004, however, the application already had gone abandoned by

operation of law (such that the Office took no action in response to the amendment), and Petitioner appears to have taken no action at that time to remedy the abandonment;

- the Office mailed the Notice of Abandonment on 7 March, 2006;
- Petitioner filed, *inter alia*, the instant petition on 22 March, 2006, with fee and a reply in the form of an amendment, and indicated that she timely filed a response on or about 28 October, 2004, however, despite the averment of a date-stamped receipt card, (see: MPEP §503[1]), no such paper appears to accompany the petition;
- thus, the showing provided by Petitioner as of this writing is not in the nature of, for example, in the form of a date-stamped receipt cards to support allegations as to any content and completeness of filings before the Office.

---

[1] MPEP §503 provides in pertinent part:

§503 Application Number and Filing Receipt

* * *

A return postcard should be attached to *each* patent application for which a receipt is desired. It is important that the return postcard itemize all of the components of the application. If the postcard does not itemize each of the components of the application, it will not serve as evidence that any component which was not itemized was received by the United States Patent and Trademark Office (USPTO). It should be recognized that the identification of an application by application number does not necessarily signify that the USPTO has accepted the application as complete (37 C.F.R. §1.53(a)).

* * *

RETURN POSTCARD

If a receipt of any item (e.g., paper or fee) filed in the USPTO is desired, it may be obtained by enclosing with the paper a self-addressed postcard specifically identifying the item. The USPTO will stamp the receipt date on the postcard and place it in the outgoing mail. A postcard receipt which itemizes and properly identifies the items which are being filed serves as *prima facie* evidence of receipt in the USPTO of all the items listed thereon on the date stamped thereon by the USPTO.

The identifying data on the postcard should be so complete as to clearly identify the item for which receipt is requested. For example, the postcard should identify the applicant's name, application number (if known), confirmation number (if known), filing date, interference number, title of the invention, etc. The postcard should also identify the type of paper being filed, e.g., new application, affidavit, amendment, notice of appeal, appeal brief, drawings, fees, motions, supplemental oath or declaration, petition, etc., and the number of pages being submitted. If a new application is being filed, all parts of the application being submitted should be separately listed on the postcard, e.g., the number of pages of specification (including written description, claims and abstract), number of claims, number of sheets of drawings, number of pages of oath/declaration, number of pages of cover sheet (provisional application).

The postcard receipt will not serve as *prima facie* evidence of receipt of any item which is not adequately itemized on the postcard. For example, merely listing on the postcard "a complete application" or "patent application" will not serve as a proper receipt for each of the required components of an application (e.g., specification (including claims), drawings (if necessary), oath or declaration and the application filing fee) or missing portions (e.g., pages, sheets of drawings) of an application if one of the components or portion of a component is found to be missing by the USPTO. Each separate component should be specifically and properly itemized on the postcard. Furthermore, merely incorporating by reference in the postcard receipt, the items listed in a transmittal letter will not serve as *prima facie* evidence of receipt of those items.

The person receiving the item(s) in the USPTO will check the listing on the postcard against the item(s) being filed to be sure they are properly identified and that all the items listed on the postcard are presently being submitted to the USPTO. If any of the items listed on the postcard are not being submitted to the USPTO, those items will be crossed off and the post-card initialed by the person receiving the items. Upon return of a postcard receipt from the USPTO, the postcard receipt should be promptly reviewed by the person who filed the items to ensure that every item specifically denoted on the postcard was received by the USPTO. If the postcard receipt has been annotated to indicate that a particular item denoted on the postcard was not received by the USPTO, the postcard receipt will not serve as *prima facie* evidence of receipt of that item in the USPTO. (Emphasis supplied.)

STATUTES, REGULATIONS AND ANALYSIS

Congress has authorized the Commissioner to "revive an application if the delay is shown to the satisfaction of the Commissioner to have been "unavoidable." 35 U.S.C. §133 (1994).[2]

The regulations at 37 C.F.R. §1.137(a) and (b) set forth the requirements for a petitioner to revive a previously unavoidably or unintentionally, respectively, abandoned application under this congressional grant of authority. The language of 35 U.S.C. §133 and 37 C.F.R. §1.137(a) is clear, unambiguous, and without qualification: the delay in tendering the reply to the outstanding Office action, as well as filing the first petition seeking revival, must have been unavoidable for the reply now to be accepted on petition.[3]

Delays in responding properly raise the question whether delays are unavoidable.[4] Where there is a question whether the delay was unavoidable, Petitioners must meet the burden of establishing that the delay was unavoidable within the meaning of 35 U.S.C. §133 and 37 C.F.R. §1.137(a).[5] And the Petitioner must be diligent in attending to the matter.[6] Failure to do so does not constitute the care required under Pratt, and so cannot satisfy the test for diligence and due care.

(By contrast, unintentional delays are those that do not satisfy the very strict statutory and regulatory requirements of unavoidable delay, and also, by definition, are not intentional.[7]))

Allegations as to the Request to Withdraw the Holding of Abandonment

The courts have determined the construct for properly supporting a petition seeking withdrawal

---

[2] 35 U.S.C. §133 provides:
35 U.S.C. §133 Time for prosecuting application.
Upon failure of the applicant to prosecute the application within six months after any action therein, of which notice has been given or mailed to the applicant, or within such shorter time, not less than thirty days, as fixed by the Commissioner in such action, the application shall be regarded as abandoned by the parties thereto, unless it be shown to the satisfaction of the Commissioner that such delay was unavoidable.

[3] Therefore, by example, an unavoidable delay in the payment of the Filing Fee might occur if a reply is shipped by the US Postal Service, but due to catastrophic accident, the delivery is not made.

[4] See: *Changes to Patent Practice and Procedure; Final Rule Notice*, 62 *Fed. Reg.* at 53158-59 (October 10, 1997), 1203 *Off. Gaz. Pat. Office* at 86-87 (October 21, 1997).

[5] See: In re Application of G, 11 USPQ2d 1378, 1380 (Comm'r Pats. 1989).

[6] See: Diligence in Filing Petitions to Revive and Petitions to Withdraw the Holding of Abandonment, 1124 Off. Gaz. Pat. Office 33 (March 19, 1991). It was and is Petitioner's burden to exercise diligence in seeking either to have the holding of abandonment withdrawn or the application revived. See 1124 Off. Gaz. Pat. Office supra.

[7] Therefore, by example, an unintentional delay in the reply might occur if the reply and transmittal form are to be prepared for shipment by the US Postal Service, but other pressing matters distract one's attention and the mail is not timely deposited for shipment.

of a holding of abandonment.[8],[9]

Thus, Petitioner appears not to have satisfied the showing requirements described above. Petitioner has failed to carry his burden in this matter so as to obtain relief under the provisions of 37 C.F.R. §1.181.

Therefore, relief cannot be granted under the provisions of 37 C.F.R. §1.181.

Allegations as to
Unintentional Delay

The requirements for relief under the provisions of 37 C.F.R. §1.137(b) are: petition, fee, reply, showing of unintentional delay, and–where appropriate–a terminal disclaimer and fee.

---

[8] See: Delgar v. Schulyer, 172 USPQ 513 (D.D.C. 1971).

[9] The commentary at MPEP §711.03(c) provides:

* * *

B. Petition To Withdraw Holding of Abandonment Based on Evidence That a Reply Was Timely Mailed or Filed

37 C.F.R. §1.10(c) through §1.10(e) and §1.10(g) set forth procedures for petitioning the Director of the USPTO to accord a filing date to correspondence as of the date of deposit of the correspondence as "Express Mail." A petition to withdraw the holding of abandonment relying upon a timely reply placed in "Express Mail" must include an appropriate petition under 37 C.F.R. §1.10(c), (d), * (e), or (g) (see MPEP § 513). When a paper is shown to have been mailed to the Office using the "Express Mail" procedures, the paper must be entered in PALM with the "Express Mail" date.

Similarly, applicants may establish that a reply was filed with a postcard receipt that properly identifies the reply and provides *prima facie* evidence that the reply was timely filed. See MPEP § 503. For example, if the application has been held abandoned for failure to file a reply to a first Office action, and applicant has a postcard receipt showing that an amendment was timely filed in response to the Office action, then the holding of abandonment should be withdrawn upon the filing of a petition to withdraw the holding of abandonment. When the reply is shown to have been timely filed based on a postcard receipt, the reply must be entered into PALM using the date of receipt of the reply as shown on the post card receipt.

Where a certificate of mailing under 37 C.F.R. §1.8, but not a postcard receipt, is relied upon in a petition to withdraw the holding of abandonment, see 37 C.F.R. §1.8(b) and MPEP § 512. As stated in 37 C.F.R. §1.8(b)(3) the statement that attests to the previous timely mailing or transmission of the correspondence must be on a personal knowledge basis, or to the satisfaction of the Director of the USPTO. If the statement attesting to the previous timely mailing is not made by the person who signed the Certificate of Mailing (i.e., there is no personal knowledge basis), then the statement attesting to the previous timely mailing should include evidence that supports the conclusion that the correspondence was actually mailed (e.g., copies of a mailing log establishing that correspondence was mailed for that application). When the correspondence is shown to have been timely filed based on a certificate of mailing, the correspondence is entered into PALM with the actual date of receipt (i.e., the date that the duplicate copy of the papers was filed with the statement under 37 C.F.R. §1.8).

37 C.F.R. §1.8(b) also permits applicant to notify the Office of a previous mailing or transmission of correspondence and submit a statement under 37 C.F.R. 1.8(b)(3) accompanied by a duplicate copy of the correspondence when a reasonable amount of time (e.g., more than one month) has elapsed from the time of mailing or transmitting of the correspondence. Applicant does not have to wait until the application becomes abandoned before notifying the Office of the previous mailing or transmission of the correspondence. Applicant should check the private Patent Application Information Retrieval (PAIR) system for the status of the correspondence before notifying the Office. See MPEP § 512.

* * *

It appears that Petitioner has satisfied the requirements of the regulation.

CONCLUSION

Because Petitioner has not satisfied the burdens set forth in Delgar v. Schulyer and within the regulation, the petition under 37 C.F.R. §1.181 hereby is **dismissed**, and the 7 March, 2006, Notice of Abandonment is maintained.

However, the petition under 37 C.F.R. §1.137(b) is **granted**.

The instant application is released to Technology Center 3700 for further processing in due course.

Telephone inquiries concerning this decision may be directed to the undersigned at (571) 272-3214.

John J. Gillon, Jr.
Senior Attorney
Office of Petitions

02 APR 2004

UNITED STATES PATENT AND TRADEMARK OFFICE

COMMISSIONER FOR PATENTS
UNITED STATES PATENT AND TRADEMARK OFFICE
P.O. BOX 1450
ALEXANDRIA, VA 22313-1450
www.uspto.gov

Siwen Chen
Corning Incorporated
SP-TI-03
Corning, NY 14831

In re Application of BROCHETON, et al. U.S. Application No.: 10/415,237 PCT No.: PCT/EP01/12283 Int. Filing Date: 09 October 2001 Priority Date: 27 October 2000 Attorney Docket No.: SP00-340 For: NON-PHOTOCHROMIC, COLORED, BORO-SILICATE INORGANIC GLASSES WHICH ABSORB ULTRAVIOLET, AND PREPARATIONS	DECISION ON PETITION UNDER 37 CFR 1.181

This decision is in response to applicant's "Petition to be Given New Time Period For Reply Under 37 C.F.R. § 1.134" filed 17 November 2003 and again by facsimile on 26 March 2004. For the reasons detailed below, the petition is being treated as a petition under 37 CFR 1.181.

BACKGROUND

On 09 October 2001, applicant filed international application PCT/EP01/12283, which claimed priority of an earlier application filed 27 October 2000. A copy of the international application was communicated to the United States Patent and Trademark Office from the International Bureau on 10 May 2002. The deadline for payment of the basic national fee in the United States was to expire 30 months from the priority date, 27 April 2003.

On 25 April 2003, applicant filed a transmittal letter for entry into the national stage in the United States, which was accompanied by the requisite basic national fee as required by 35 U.S.C. 371(c)(1) and a First Preliminary Amendment.

On 29 July 2003, applicant was mailed a NOTIFICATION OF MISSING REQUIREMENTS UNDER 35 U.S.C. 371 (Form PCT/DO/EO/905) informing applicant of the need to provide an executed oath or declaration of the inventors, in compliance with 37 CFR 1.497(a) and (b), identifying the application by the International Application number and international filing date. In addition, applicant was advised of the need to pay the surcharge for providing an oath or declaration of the inventor later than thirty months from the priority date. Applicant was given two months to respond and advised that this time period could be extended

with a proper petition and payment of fees.

On 17 November 2003, applicant filed the present petition arguing that the Form PCT/DO/EO/905 was never received.

On 26 March 2003, applicant re-filed the present petition by facsimile.

On 30 March 2004, the present application became abandoned as to the United State of America for failure to timely respond to the Form PCT/DO/EO/905 mailed 29 July 2003.

DISCUSSION

The Official Gazette, at 1156 OG 53, provides that a petition requesting relief based on the grounds that an Office action was not received must be accompanied by a statement that (1) the Office action was not received, (2) attests that a search of the file jacket indicates the Office action was not received, (3) attests that a search of counsel's docket records indicates the Office action was not received and (4) the Petition must also be accompanied by copies of the docket records where the non-received Office action would have been entered. (See also, Delgar v. Schulyer, 172 USPQ 513 (D.D.C. 1971). Applicant has satisfied items (1) - (3) above.

Regarding item (4), it appears that applicant has only provided the docket record for attorney Siwen Chen. As detailed above, in order to satisfy item (4) applicant is required to provide a copy of the docket record for the entire firm (or in this case Corning Intellectual Property Department) where the non-received Office action would have been entered. Applicant's exhibits make clear that the office action in question was not received into the present application file or tracking system for the present application. However, absent a copy of the docket record for the entire department for this time period, the possibility exists that the Form PCT/DO/EO/905 was in fact received but docket to an incorrect application . As such, it is not possible to grant applicant's petition at this time.

CONCLUSION

For the reasons detailed above, applicant's petition under 37 CFR 1.181 is **DISMISSED**.

This application is being returned to the United States Designated/Elected Office (US/DO/EO) for the preparation and mailing of a NOTIFICATION OF ABANDONMENT (Form PCT/DO/EO/909).

Any reconsideration on the merits of this petition must be filed within **TWO (2) MONTHS** from the mail date of this decision. Any reconsideration request should include a cover letter entitled "Renewed Petition Under 37 CFR 1.181." Extensions of time may be obtained under 37 CFR 1.136(a).

Any further correspondence with respect to this matter should be directed to Mail Stop PCT, Commissioner for Patents, Office of PCT Legal Administration, P.O. Box 1450, Alexandria, Virginia 22313-1450, with the contents of the letter marked to the attention of the Office of PCT Legal Administration.

Derek A. Putonen
Attorney Advisor
Office of PCT Legal Administration
Tel: (703) 305-0130
Fax: (703) 308-6459

19 JUL 2004

#7

UNITED STATES PATENT AND TRADEMARK OFFICE

Commissioner for Patents
United States Patent and Trademark Office
P.O. Box 1450
Alexandria, VA 22313-1450
www.uspto.gov

Siwen Chen
Corning Incorporated
SP-TI-03
Corning, NY 14831

In re Application of	:	
BROCHETON, et al.	:	
U.S. Application No.: 10/415,237	:	
PCT No.: PCT/EP01/12283	:	DECISION ON RENEWED
Int. Filing Date: 09 October 2001	:	
Priority Date: 27 October 2000	:	PETITION UNDER
Attorney Docket No.:SP00-340	:	
For: NON-PHOTOCHROMIC, COLORED, BORO-SILICATE INORGANIC GLASSES WHICH ABSORB ULTRAVIOLET, AND PREPARATIONS	:	37 CFR 1.181

This decision is in response to applicant's "Renewed Petition Under 37 C.F.R. § 1.181" filed 10 May 2004 in the United States Patent and Trademark Office (USPTO).

BACKGROUND

On 02 April 2004, applicant was mailed a decision dismissing applicant's petition under 37 CFR 1.181. Applicant was afforded two months to file any request for reconsideration.

On 10 May 2004, applicant filed the present renewed petition.

DISCUSSION

As detailed in the decision mailed 02 April 2004 and Official Gazette notice 1156 OG 53, a petition under 37 CFR 1.181 requesting relief based upon non-receipt of an office action must be accompanied by:

> A statement from the practitioner stating that the Office action was not received by the practitioner and attesting to the fact that a search of the file jacket and docket records indicates that the Office action was not received. A copy of the docket record where the non-received Office action would have been entered had it been received and docketed must be attached to and referenced in practitioner's statement.

Applicant previously satisfied all of the above elements except providing a complete copy

of the firm docket records for where the non-received Office action would have been entered. Applicant presently contends that this item was satisfied in that applicant previously provided the docket record for the attorney of record and that counsel has been attorney of record for the entire prosecution period. In addition, applicant has included an affidavit from Michelle M. Proctor explaining the docketing procedures for the firm. Notwithstanding applicant's submission, a copy of the docket for the entire legal department for the period in question is required. This requirement is to assure that the Office action was not inadvertently docketed to another attorney in the department or law firm. As explained in the Manual of Patent Examination (MPEP):

> A copy of the docket record where the nonreceived Office communication would have been entered had it been received and docketed must be attached to and referenced in practitioner's statement. For example, if a three month period for reply was set in the nonreceived Office action, a copy of the docket report showing all replies docketed for a date three months from the mail date of the nonreceived Office action must be submitted as documentary proof of nonreceipt of the Office action.

In order to guard against human error in the docketing of papers, applicant is required to provide a copy of the docket record for the legal department. Applicant is not required to provide the docket record for the entire prosecution period, but merely for the period for reply; specifically, 29 September 2003.

CONCLUSION

Applicant's renewed petition under 37 CFR 1.181 is **DISMISSED**.

Applicant is hereby afforded **TWO (2) MONTHS** from the mail date of this decision to file any request for reconsideration. Any reconsideration request should include a cover letter entitled, "Renewed Petition Under 37 CFR 1.181." No additional petition fee is required. Extensions of time may be obtained under 37 CFR 1.136(a).

Any further correspondence with respect to this matter should be directed to Mail Stop PCT, Commissioner for Patents, Office of PCT Legal Administration, P.O. Box 1450, Alexandria, Virginia 22313-1450, with the contents of the letter marked to the attention of the Office of PCT Legal Administration.

Derek A. Putonen
Attorney Advisor
Office of PCT Legal Administration
Tel: 703-305-0130
Fax: 703-308-6459

14 OCT 2004

#4

UNITED STATES PATENT AND TRADEMARK OFFICE

Commissioner for Patents
United States Patent and Trademark Office
P.O. Box 1450
Alexandria, VA 22313-1450
www.uspto.gov

Siwen Chen
Corning Incorporated
SP-TI-03
Corning, NY 14831

In re Application of	:	
BROCHETON, et al.	:	
U.S. Application No.: 10/415,237	:	
PCT No.: PCT/EP01/12283	:	DECISION ON RENEWED
Int. Filing Date: 09 October 2001	:	
Priority Date: 27 October 2000	:	PETITION UNDER
Attorney Docket No.:SP00-340	:	
For: NON-PHOTOCHROMIC, COLORED, BORO-SILICATE INORGANIC GLASSES WHICH ABSORB ULTRAVIOLET, AND PREPARATIONS	:	37 CFR 1.181

This decision is in response to applicant's "Renewed Petition Under 37 C.F.R. § 1.181" filed 13 September 2004 in the United States Patent and Trademark Office (USPTO).

BACKGROUND

On 19 July 2004, applicant was mailed a decision dismissing applicant's renewed petition under 37 CFR 1.181. Applicant was afforded two months to file any request for reconsideration.

On 13 September 2004, applicant filed the present renewed petition.

DISCUSSION

As detailed in the decision mailed 19 July 2004 and Official Gazette notice 1156 OG 53, a petition under 37 CFR 1.181 requesting relief based upon non-receipt of an office action must be accompanied by:

> A statement from the practitioner stating that the Office action was not received by the practitioner and attesting to the fact that a search of the file jacket and docket records indicates that the Office action was not received. A copy of the docket record where the non-received Office action would have been entered had it been received and docketed must be attached to and referenced in practitioner's statement.

Applicant previously satisfied all of the above elements except providing a complete copy

of the firm docket records for where the non-received Office action would have been entered. Applicant's present filing and explanation of counsel satisfies this item. As such it proper to grant applicant's second renewed petition at this time in that it is clear that applicant never received the Form PCT/DO/EO/905 in question. Further, a review of the application file finds that applicant filed a declaration on 10 May 2004 thus meeting the requirements of the Notification of Missing Requirements mailed 29 July 2003.

CONCLUSION

Applicant's second renewed petition under 37 CFR 1.181 is **GRANTED**.

The application will be given an international filing date of 09 October 2001 under 35 U.S.C. 363 and a date of **10 May 2004** under 35 U.S.C. 371(c)(1), (c)(2) and (c)(4).

This application is being returned to the United States Designated/Elected Office (US/DO/EO) for further processing in accordance with this decision, namely the issuance of a "Notification of Acceptance of Application Under 35 U.S.C. 371 and 37 CFR 1.495" (Form PCT/DO/EO/903) and a corrected filing receipt indicating the correct 371 date as detailed above.

Derek A. Putonen
Attorney Advisor
Office of PCT Legal Administration
Tel: 703-305-0130
Fax: 703-308-6459

UNITED STATES PATENT AND TRADEMARK OFFICE

Commissioner for Patents
United States Patent and Trademark Office
P.O. Box 1450
Alexandria, VA 22313-1450
www.uspto.gov

Mailed: 5/16/05

WAK
Paper Number __

In re application of :
Yves Brocheton et al. : DECISION ON
Serial No. 10/415,237 : PETITION
Filed: April 25, 2003 :
For: NON-PHOTOCHROMIC COLORED BOROSILICATE: INORGANIC GLASSES WHICH ABSORB ULTRAVIOLET AND PREPARATIONS

This is a decision on PETITION TO EXPUNGE UNDER 37 C.F.R. 1.59(b), filed November 15, 2004, which has been accepted as a timely petition under 1.59(b) and MPEP 724.02 and is before the Group Director of Technology Center for consideration.

DECISION

Petitioner requests that Exhibits 5, 7 and 8 filed November 14, 2003 and September 9, 2004 be expunged that the documents be appropriately disposed of in accordance with 37 CFR 1.59. Each of the criteria for granting the request has been satisfied, see the MPEP 724.05.

The petition is **GRANTED.**

Section 1.59 has been amended to eliminate references to returning documents that have been expunged to recognize that, with electronic Official files, there will be nothing to return when a paper is expunged.

The Office is capturing electronic images of all documents that form the Official file. Where the image is generated from a physical source document, the originating document may be disposed of once the electronic image accuracy is verified. The paper source document will eventually be destroyed under a United States National Archives and Records Administration (NARA) approved schedule. Therefore, if a document is to be expunged from the record, the only operation that will be required will be removal of the image from the Official file.

Paragraph (a)(1) of §1.59 has been amended by deleting the phrase "and returned " from the first sentence, and deleting the second sentence. Paragraph (b) of §1.59 has been amended by deleting the phrase "and return " from each of the first and second sentences. The Office will continue to provide notice in the Official file that a paper has been expunged and the Office will send a decision to the applicant notifying the applicant that the paper has been expunged.

10/415,237

The image of the document will be removed from the Official file.

JMStone

Jacqueline M. Stone, Director
Technology Center 1700
Chemical and Materials Engineering

Siwen Chen
Corning Incorporated
SP-TI-03
Corning, NY 14831

UNITED STATES PATENT AND TRADEMARK OFFICE

Commissioner for Patents
United States Patent and Trademark Office
P.O. Box 1450
Alexandria, VA 22313-1450
www.uspto.gov

MAY 14 2007

NIXON & VANDERHYE, PC
901 NORTH GLEBE ROAD, 11TH FLOOR
ARLINGTON VA 22203

In re Application of	:
Klatzmann et al.	:
Serial No.: 10/415,242	: PETITION DECISION
Filed: October 15, 2003	:
Attorney Docket No.: BJS-3665-50	:

This is in response to the petition under 37 CFR § 1.181, filed March 16, 2007, requesting that the finality of the Office action of November 16, 2006 be withdrawn.

BACKGROUND

The examiner mailed a non-final Office action on March 20, 2006, setting a three month shortened statutory period for reply. In this action, claim 66 was rejected under 35 U.S.C. 112, second paragraph as being indefinite. Claims 66-69 and 72 were rejected under 35 U.S.C. 112, first paragraph, as failing to comply with the written description requirement. Claims 66-68 were rejected under 35 U.S.C. 102 (b) as being anticipated by Rensen et al. Claims 66-69, 72, and 73 were also rejected under 35 U.S.C. 102 (b) as being anticipated by Hatziioannou et al.

In response to the non-final Office action of March 20, 2006, applicants amended claim 66. Applicants also argued the rejections set forth in the Office action.

The examiner mailed a final Office action on November 16, 2006, setting a three month shortened statutory period for reply. In this Office action, the rejection of claims 66-68 under 35 U.S.C. §102(b) as being anticipated by Rensen et al. and the rejection of claims 66-69, 72, and 73 under 35 U.S.C. §102(b) as being anticipated by Hatziioannou et al. was withdrawn in view of applicants' amendment. The rejection of claim 66 under 35 U.S.C. 112, second paragraph, was also withdrawn in view of applicants' amendment to claim 66. The rejection of claims 66-69 and 72 under 35 U.S.C. 112, first paragraph, was maintained. Also, upon further consideration, new grounds of rejection were made in view of the amendment to claim 66. Specifically, claims 66-68 were rejected under 35 U.S.C 102 (b) as being anticipated by Wagner et al. Claims 66-69, 72 and 73 were rejected under 35 U.S.C 103 (a) as being unpatentable over Bennett et al. in view of Chu et al.

In response thereto, applicants filed this petition on March 16, 2007, requesting that the finality of the Office action of November 16, 2006 be withdrawn.

DISCUSSION

Applicants argue the Office action of November 16, 2006, sets forth two new grounds of rejections based on newly cited art. Specifically, applicants argue that the finality is premature as the two new art grounds of rejection were neither necessitated by applicants' amendment of the claims nor based on information submitted in an information disclosure statement filed during the period set forth in Rule 97(c).

Applicants' argument is not persuasive. The claims filed in response to the first Office action were amended to recite "a retroviral core protein synthesized from a gag gene". Because the original claims were not limited to a retroviral core protein synthesized from a gag gene, the examiner was not compelled to search for this limitation. When applicants amended the claims to recite a retroviral core protein synthesized from a gag gene, the inclusion of this language triggered a new search which yielded the new references used to reject the amended claims. Therefore, it is considered that applicants' amendment necessitated the new grounds of rejection in the Office action of November 16, 2006 which was properly made final.

DECISION

The petition is **DENIED**. Any new or renewed petition must be filed within TWO MONTHS of the mail date of this decision.

Should there be any questions about this decision please contact Marianne C. Seidel, by letter addressed to Director, TC 1600, at the address listed above, or by telephone at 571-272-0584 or by facsimile sent to the general Office facsimile number, 703-872-9306.

John LeGuyader
Director, Technology Center 1600

OIPE
MAR 16 2007
PATENT & TRADEMARK OFFICE

IN THE UNITED STATES PATENT AND TRADEMARK OFFICE

In re Patent Application of

KLATZMANN, D. et al. Atty. Ref.: 3665-50; Confirmation No. 4662

Appl. No. 10/415,242 TC/A.U. 1648

Filed: October 15, 2003 Examiner: HUMPHREY

For: SYNTHETIC VIRUSES AND USES THEREOF

* * * * * * * * * * *

March 16, 2007

Mail Stop AF
Commissioner for Patents
P.O. Box 1450
Alexandria, VA 22313-1450

Sir:

PETITION PURSUANT TO RULE 181 AND MPEP § 706.07(c)

Pursuant to Rule 181 and MPEP § 706.07(c), withdrawal of the finality of the Office Action dated November 16, 2006, is requested.

The applicants believe the finality of the Office Action dated November 16, 2006 is premature as the Amendment of August 21, 2006 is not believed to have necessitated the new grounds of rejection.

More specifically, the Office Action of November 16, 2006 contains two new grounds of rejection based on newly cited art (i.e., the Section 102 rejection of claims 66-68 over Wagner (Archives of Virology 1992, Vol. 127, pp 117-137); and the Section 103 rejection of claims 66-69, 72 and 73 over Bennett (Journal of Virology, March 1999,

Vol. 73, No. 3, pp 2045-2051) and Chu (Gene Therapy, September 1994, Vol. 1(5), pp 292-299)).

The Amendment of August 21, 2006 amended claim 66 to (i) further characterize the synthetic retroviral particle as comprising a retroviral core protein synthesized from a gag gene to obviate a Section 112, second paragraph rejection of the claim, and (ii) delete a period to obviate an objection to the claim. The objection and Section 112, second paragraph, rejection of claim 66 contained in the Office Action of March 20, 2006 were withdrawn in response to the amendment of claim 66 and accompanying remarks.

Moreover, the art rejections asserted in the Office Action of March 20, 2006 (i.e., the Section 102 rejection of claims 66-68 over Van Rensen (Pharmaceutical Research, 1999, Vol. 16, No. 2, pp 198-204), and the Section 102 rejection of claims 66-69, 72 and 73 over Hatziioannou (Journal of Virology, June 1998, Vol. 72, No. 6, pp 5313-5317)) were withdrawn in response to the Remarks of the Amendment of August 21, 2006.

The finality of the Office Action of November 16, 2006 is premature as the two new art grounds of rejection were neither necessitated by the applicants' amendment of the claims nor based on information submitted in an information disclosure statement filed during the period set forth in Rule 97(c). As noted in MPEP § 706.07(a):

> A second or any subsequent action on the merits in any application or patent involved in reexamination proceedings should not be made final if it includes a rejection, on prior art not of record, of any claim amended to include limitations which should reasonably have been expected to be claimed. See MPEP § 904 et seq. For example, one would reasonably expect that a rejection under 35 U.S.C. 112 for the reason of incompleteness would be replied to by an amendment supplying the omitted element.

The Examiner should have reasonably expected that the Section 112, second paragraph, rejection of the Office Action of March 20, 2006 would be replied to, as noted in the above-quoted example of the MPEP. The Amendment of August 21, 2006 did not necessitate the new art rejections of November 16, 2006 and the Office Action of November 16, 2006 should not have been made final.

Withdrawal of the finality of the Office Action dated November 16, 2006 is requested.

A fee is not believed to be required for consideration of the present Petition as the same is only believed to be necessary due to Examiner error in issuing a premature final Office Action. The Office is authorized however to charge the undersigned's Deposit Account No. 14-1140 for any fee deemed to be required for consideration of the present Petition.

An early and favorable decision on the present Petition prior to the Examiner's next Action is requested.

Respectfully submitted,

NIXON & VANDERHYE P.C.

By: /B. J. Sadoff/
B. J. Sadoff
Reg. No. 36,663

BJS:
901 North Glebe Road, 11th Floor
Arlington, VA 22203-1808
Telephone: (703) 816-4000
Facsimile: (703) 816-4100

UNITED STATES PATENT AND TRADEMARK OFFICE

UNITED STATES DEPARTMENT OF COMMERCE
United States Patent and Trademark Office
Address: COMMISSIONER FOR PATENTS
P.O. Box 1450
Alexandria, Virginia 22313-1450
www.uspto.gov

BANNER & WITCOFF, LTD.
1100 13th STREET, N.W.
SUITE 1200
WASHINGTON, DC 20005-4051

Mail Date: 04/21/2010

Applicant	: Sergio Barberis	: DECISION ON REQUEST FOR
Patent Number	: 7596377	: RECALCULATION of PATENT
Issue Date	: 09/29/2009	: TERM ADJUSTMENT IN VIEW
Appliction No	: 10/415,254	: OF WYETH AND NOTICE OF INTENT TO
Filed	: 06/03/2003	: ISSUE CERTIFICATE OF CORRECTION
		:

The Request for Recalculation is **GRANTED** to the extent indicated.

The patent term adjustment has been determined to be **300** days. The USPTO will *sua sponte* issue a certificate of correction reflecting the amount of PTA days determined by the recalculation.

Prior to the issuance of the certificate of correction, the USPTO will afford patentee an opportunity to be heard and request reconsideration. Accordingly, patentee has **one month or thirty (30) days**, whichever is longer, to file a request for reconsideration of this patent term adjustment calculation. See 35 U.S.C. 154(b)(3)(B)(ii) and 37 CFR 1.322(a)(4). No extensions of time will be granted under 37 CFR 1.136.

Patentee should use document code PET.OP if electronically filing a request for reconsideration of this patent term adjustment calculation. The patentee must also include the information required by 37 CFR 1.705(b)(2) and the fee required by 37 CFR 1.18(e). If patentee does not file a timely request for reconsideration of this patent term adjustment calculation including the information required by 37 CFR 1.705(b)(2) and the fee required by 37 CFR 1.18(e), the USPTO will issue a certificate of correction reflecting the PTA determination noted above.

Patentee should be aware that in order to preserve the right to review in the United States District Court for the District of Columbia of the USPTO patent term adjustment determination, patentee must ensure that he or she also take the steps required under 35 U.S.C. 154(b)(4)(A) in a timely manner. Nothing in the request for recalculation should be construed as providing an alternative time frame for commencing a civil action under 35 U.S.C. 154(b)(4)(A).

Any questions concerning this decision should be directed to the Office of Patent Legal Administration at 571-272-7702.

09 SEP 2004

UNITED STATES PATENT AND TRADEMARK OFFICE

COMMISSIONER FOR PATENTS
UNITED STATES PATENT AND TRADEMARK OFFICE
P.O. BOX 1450
ALEXANDRIA, VA 22313-1450
www.uspto.gov

SYNGENTA CROP PROTECTION, INC.
Patent and Trademark Department
410 Swing Road
Greensboro, NC 27409

In re Application of
JONES, Raymond V. H.
U.S. Application No.: 10/415,258
PCT No.: PCT/GB01/04648
Int. Filing Date: 18 October 2001
Priority Date: 27 October 2000
Attorney Docket No.: PPD 50600/UST
For: PREPARATION OF 4-METHYL-2, 3, 5, 6-TETRAFLUOROBENZYL ALCOHOL

DECISION ON PETITION TO WITHDRAW HOLDING OF ABANDONMENT

This decision is in response to applicant's "Petition to Withdraw Holding of Abandonment . . . " ("Pet.") filed 26 May 2004. No fee is required.

BACKGROUND

On 05 September 2003, the United States Designated/Elected Office (DO/EO/US) mailed a Notification of Missing Requirements under 35 U.S.C. 371 (Form PCT/DO/EO/905) indicating that an oath or declaration in compliance with 37 CFR 1.497(a) and (b) and a $130.00 surcharge fee pursuant to 37 CFR 1.492(e) was required. A two-month time limit in which to respond was set with extensions of time available.

On 22 January 2004, applicant filed a "Status Request."

On 05 March 2004, a response to the status request was mailed indicating that a Form PCT/DO/EO/905 was mailed to the applicant on 05 September 2003.

On 22 March 2004, the DO/EO/US mailed a Notification of Abandonment (Form PCT/DO/EO/909) for failing to respond to the Form PCT/DO/EO/905 within the time period set therein.

On 26 May 2004, applicant filed the instant petition which was accompanied by, *inter alia*, a "Statement from Susan Keefer" and several pages of computer generated docket records.

DISCUSSION

The showing required to establish the failure to receive an Office communication

consists of: (1) a statement from the practitioner declaring that the Office communication was not received by the practitioner; (2) a statement attesting to the fact that a search of the file jacket and docket records indicates that the Office communication was not received; and, (3) a copy of the docket record where the nonreceived Office communication would have been entered had it been received and docketed must be attached to and referenced in practitioners' statement.

In the petition, counsel states that "the Notification of Missing Requirements was not received." Pet. at ¶ 1. In addition, counsel "attests that a search of the file jacket and docket records in my office indicates that this Notification was not received." Id. at ¶ 2. These statements satisfy items (1) and (2) above.

The petitioner also submitted several pages of a computer docket sheet "where the non-received Notification of Missing Requirements would have been entered had it been received and docketed," Id. at ¶ 3, and a "Statement from Susan Keefer" who claims that she did not receive the Form PCT/DO/EO/905 mailed 05 September 2003.

A review of the docket records show that there is no record that the Form PCT/DO/EO/905 mailed 05 September 2003 was received. Petitioner included a record of all correspondence received from 05 September 2003 to 28 November 2003 and the computer docket record for the above-captioned application. In addition, a statement from Ms. Susan Keefer was provided who declares that she did not receive the correspondence. This evidence is sufficient to satisfy item (3).

Applicant has met all of the requirements required to establish nonreceipt of an Office action.

CONCLUSION

For the reasons noted above, applicant's petition to withdraw the holding of abandonment is hereby **GRANTED**.

The Notification of Abandonment (Form PCT/DO/EO/909) mailed 22 March 2004 is hereby **VACATED**.

Applicant must provide a declaration in compliance with 37 CFR 1.497 within **TWO (2) MONTHS** from the mail date of this decision. Extensions of time pursuant to 37 CFR 1.136 are available. Failure to comply will result in the abandonment of this application.

Any further correspondence with respect to this matter deposited with the United States Postal Service should be addressed to the Mail Stop PCT, Commissioner for Patents, Office of PCT Legal Administration, P.O. Box 1450, Alexandria, Virginia

22313-1450, with the contents of the letter marked to the attention of the Office of PCT Legal Administration.

James Thomson
Attorney Advisor
Office of PCT Legal Administration

Tel.: (703) 308-645;
(571) 273-3302 (after 30 September 2004)

28 OCT 2004

UNITED STATES PATENT AND TRADEMARK OFFICE

COMMISSIONER FOR PATENTS
UNITED STATES PATENT AND TRADEMARK OFFICE
P.O. BOX 1450
ALEXANDRIA, VA 22313-1450
www.uspto.gov

SYNGENTA CROP PROTECTION, INC.
Patent and Trademark Department
410 Swing Road
Greensboro, NC 27409

In re Application of
JONES, Raymond V. H.
U.S. Application No.: 10/415,258
PCT No.: PCT/GB01/04648
Int. Filing Date: 18 October 2001
Priority Date: 27 October 2000
Attorney Docket No.: PPD 50600/UST
For: PREPARATION OF 4-METHYL-2, 3, 5, 6-TETRAFLUOROBENZYL ALCOHOL

DECISION

This decision is in response to applicant's "Response to Decision on Petition to Withdraw Holding of Abandonment" filed 22 October 2004. This is treated as a petition under 37 CFR 1.181. No fee is required.

BACKGROUND

On 09 September 2004, a decision granting applicant's petition to withdraw the holding of abandonment was mailed. Applicant was given two months to submit a declaration in compliance with 37 CFR 1.497(a) and (b).

On 22 October 2004, applicant filed the instant petition which was accompanied by, *inter alia*, a copy of documents purportedly mailed on 29 April 2004, a copy of a Monthly Statement of Deposit Account and a date-stamped postcard receipt for the 29 April 2004 mailing.

DISCUSSION

A review of the above-captioned application reveals that the declaration purportedly filed 29 April 2004 was not located in the file. MPEP § 503 lists procedures to ensure receipt of any paper filed in the USPTO. A postcard receipt which itemizes and properly identifies the papers which are being filed serves as *prima facie* evidence of receipt in the USPTO of all the items listed thereon on the date stamped thereon by the USPTO.

In this case, applicant provided a copy of the date-stamped filing receipt for the documents submitted 29 April 2004. The filing receipt records that an "Executed Declaration and Fee $130.00" were received in the USPTO. The filing receipt is stamped "OIPE APR 29 2004" across its face. The U.S. application number, and

attorney docket number were listed on the postcard receipt.

Accordingly, applicant has provided *prima facie* evidence that the executed declaration was originally received by the USPTO on 29 April 2004. Moreover, USPTO financial records indicate that a surcharge fee of $130.00 was charged to applicant's Deposit Account No. 50-1676 in the above-captioned application on 29 April 2004.

DECISION

Applicant's petition under 37 CFR 1.181 is **GRANTED**.

The executed declaration is in compliance with 37 CFR 1.497(a) and (b).

Applicant has completed the requirements for acceptance under 35 U.S.C. 371(c). The application has an international filing date of 18 October 2001, under 35 U.S.C. 363 and a 35 U.S.C. 371(c)(1), (c)(2) and (c)(4) date of 29 April 2004.

This application is being forwarded to the National Stage Processing Division of the Office of PCT Operations for continued processing.

James Thomson
Attorney Advisor
Office of PCT Legal Administration

Tel.: (571) 272-3302

28 OCT 2004

UNITED STATES PATENT AND TRADEMARK OFFICE

COMMISSIONER FOR PATENTS
UNITED STATES PATENT AND TRADEMARK OFFICE
P.O. BOX 1450
ALEXANDRIA, VA 22313-1450
www.uspto.gov

SYNGENTA CROP PROTECTION, INC.
Patent and Trademark Department
410 Swing Road
Greensboro, NC 27409

In re Application of
JONES, Raymond V. H.
U.S. Application No.: 10/415,258
PCT No.: PCT/GB01/04648
Int. Filing Date: 18 October 2001
Priority Date: 27 October 2000
Attorney Docket No.: PPD 50600/UST
For: PREPARATION OF 4-METHYL-2, 3, 5, 6-TETRAFLUOROBENZYL ALCOHOL

DECISION

This decision is in response to applicant's "Response to Decision on Petition to Withdraw Holding of Abandonment" filed 22 October 2004. This is treated as a petition under 37 CFR 1.181. No fee is required.

BACKGROUND

On 09 September 2004, a decision granting applicant's petition to withdraw the holding of abandonment was mailed. Applicant was given two months to submit a declaration in compliance with 37 CFR 1.497(a) and (b).

On 22 October 2004, applicant filed the instant petition which was accompanied by, *inter alia*, a copy of documents purportedly mailed on 29 April 2004, a copy of a Monthly Statement of Deposit Account and a date-stamped postcard receipt for the 29 April 2004 mailing.

DISCUSSION

A review of the above-captioned application reveals that the declaration purportedly filed 29 April 2004 was not located in the file. MPEP § 503 lists procedures to ensure receipt of any paper filed in the USPTO. A postcard receipt which itemizes and properly identifies the papers which are being filed serves as *prima facie* evidence of receipt in the USPTO of all the items listed thereon on the date stamped thereon by the USPTO.

In this case, applicant provided a copy of the date-stamped filing receipt for the documents submitted 29 April 2004. The filing receipt records that an "Executed Declaration and Fee $130.00" were received in the USPTO. The filing receipt is stamped "OIPE APR 29 2004" across its face. The U.S. application number, and

attorney docket number were listed on the postcard receipt.

Accordingly, applicant has provided *prima facie* evidence that the executed declaration was originally received by the USPTO on 29 April 2004. Moreover, USPTO financial records indicate that a surcharge fee of $130.00 was charged to applicant's Deposit Account No. 50-1676 in the above-captioned application on 29 April 2004.

DECISION

Applicant's petition under 37 CFR 1.181 is **GRANTED**.

The executed declaration is in compliance with 37 CFR 1.497(a) and (b).

Applicant has completed the requirements for acceptance under 35 U.S.C. 371(c). The application has an international filing date of 18 October 2001, under 35 U.S.C. 363 and a 35 U.S.C. 371(c)(1), (c)(2) and (c)(4) date of 29 April 2004.

This application is being forwarded to the National Stage Processing Division of the Office of PCT Operations for continued processing.

James Thomson
Attorney Advisor
Office of PCT Legal Administration

Tel.: (571) 272-3302

28 SEP 2004

UNITED STATES PATENT AND TRADEMARK OFFICE

COMMISSIONER FOR PATENTS
UNITED STATES PATENT AND TRADEMARK OFFICE
ALEXANDRIA, VA 22313-1450
www.uspto.gov

Pearne & Gordon LLP
526 Superior Avenue East, Suite 1200
Cleveland, OH 44114-1484

In re Application of	:	
Ogawa et al.	:	
Application No. 10/415,266	:	DECISION ON
PCT No.: PCT/JP01/10419	:	
Int. Filing Date: 29 November 2001	:	PETITION UNDER
Priority Date: 30 November 2000	:	
Atty. Docket No.: 34880	:	37 CFR 1.10 (e)
For: Transferring Apparatus And	:	
Remote Control System	:	

This is in response to the petition under 37 CFR 1.10(e) filed on 30 July 2004.

BACKGROUND

This international application was filed on 29 November 2001, claimed an earliest priority date of 30 November 2000, and designated the U.S. The 30 month time period for paying the basic national fee in the United States expired at midnight on 30 May 2003. On 28 April 2003, applicants filed the basic national fee and a recordation fee.

A Notification of Acceptance (Form PCT/DO/EO/903) was mailed to counsel on 13 November 2003, indicating inter alia that the date of this application under 35 U.S.C. 371(c)(1), (2) and (4) is 28 April 2003.

DISCUSSION

Counsel states that

> It has come to our attention that the PTO is unable to locate the above-referenced PCT-based application, which was deposited with the USPS, via Express Mail (mailing label EV293319055), on April 28, 2003. Therefore, the applicants are petitioning the Commissioner to consider the application filed in the Office on the USPS deposit date of April 28, 2003.

Counsel encloses a "copy of the originally submitted application, including the specification, Application Data Sheet, Abstract, 8 sheets of formal drawings, Declaration and Power of Attorney, and Assignment." Review of the records of the USPTO reveals that the correspondence in question, including the "copy of the originally submitted application, including the specification, Application Data Sheet, Abstract, 8 sheets of formal drawings, Declaration and Power of Attorney, and Assignment," was in fact received by the USPTO on 28 April 2003 and subsequently scanned into the USPTO's IFW electronic patent application system. As the application papers actually were received and their images are appropriately recorded in the IFW system,.the present petition is **MOOT**.

DECISION

The petition under 37 CFR 1.10(e) is **DISMISSED AS MOOT**, without prejudice.

Please direct any further correspondence with respect to this matter to the Assistant Commissioner for Patents, Mail Stop PCT, Alexandria, VA 22313-1450, and address the contents of the letter to the attention of the PCT Legal Office.

Leonard Smith
PCT Legal Examiner
PCT Legal Office

George M. Dombroske
PCT Legal Examiner
PCT Legal Office
Tel: (703) 308-6721
After 30 Sep. 2004: (571) 272-3283
Fax: (703) 308-6459
After 30 Sep. 2004: (571) 273-0459

UNITED STATES PATENT AND TRADEMARK OFFICE

Commissioner for Patents
United States Patent and Trademark Office
P.O. Box 1450
Alexandria, VA 22313-1450
www.uspto.gov

ROBERTS, MLOTKOWSKI & HOBBES
P. O. BOX 10064
MCLEAN VA 22102-8064

COPY MAILED

DEC 0 5 2007

OFFICE OF PETITIONS

In re Patent No. 6,915,597	:	
Issue Date: 07/12/2005	:	
Application No. 10/415278	:	ON PETITION
Filing or 371(c) Date: 04/28/2003	:	
Atty. Docket No. 740120-208	:	

This is a decision on the Petition Under 37 CFR 1.182 to Receive Duplicate Ribboned Letters Patent, filed October 17, 2007.

The petition is **GRANTED**.

The Publishing Division is directed to issue a duplicate Letters Patent.

The $400 fee for the petition under 37 CFR 1.182 has been assessed to petitioner's deposit account.

Questions concerning this decision may be directed to the undersigned at 571-232-3232. Inquiries regarding the issuance of a duplicate Letters Patent may be directed to Krystal Paige in the Publishing Division at (703) 308-9250, Ext. 139.

A copy of this decision is being faxed to Publishing Division for issuance of a duplicate Letters Patent.

Derek L. Woods
Attorney
Office of Petitions

CC: Krystal Paige
South Tower 8th floor, Room C-32 (FAX 571-270-9937)

UNITED STATES PATENT AND TRADEMARK OFFICE

Commissioner for Patents
United States Patent and Trademark Office
P.O. Box 1450
Alexandria, VA 22313-1450
www.uspto.gov

GLAXOSMITHKLINE CORPORATE INTELLECTUAL PROPERTY, MAI B475
FIVE MOORE DR., P.O. BOX 13398
RESEARCH TRIANGLE PARK, NC 27709-3398

COPY MAILED
OCT 19 2007
OFFICE OF PETITIONS

In re Application of	:	
Anthony Patrick Jones et al	:	
Application No. 10/415,279	:	DECISION GRANTING PETITION
Filed: April 28, 2003	:	UNDER 37 CFR 1.313(c)(2)
Attorney Docket No. PG4014USW	:	

This is a decision on the petition under 37 CFR 1.313(c)(2), filed October 18, 2007, to withdraw the above-identified application from issue after payment of the issue fee.

The petition is **GRANTED**.

The above-identified application is withdrawn from issue for consideration of a submission under 37 CFR 1.114 (request for continued examination). *See* 37 CFR 1.313(c)(2).

Petitioner is advised that the issue fee paid on August 27, 2007 cannot be refunded. If, however, this application is again allowed, petitioner may request that it be applied towards the issue fee required by the new Notice of Allowance.[1]

Telephone inquiries should be directed to the undersigned at (571) 272-3208.

This application is being referred to Technology Center AU 3771 for processing of the request for continued examination under 37 CFR 1.114 and for consideration of the concurrently filed IDS.

Karen Creasy

Karen Creasy
Petitions Examiner
Office of Petitions

---

[1] *The request to apply the issue fee to the new Notice may be satisfied by completing and returning the new Part B – Fee(s) Transmittal Form (along with any balance due at the time of submission). Petitioner is advised that the Issue Fee Transmittal Form* ***must*** *be completed and timely submitted to avoid abandonment of the application.*

UNITED STATES PATENT AND TRADEMARK OFFICE

COMMISSIONER FOR PATENTS
UNITED STATES PATENT AND TRADEMARK OFFICE
P.O. BOX 1450
ALEXANDRIA, VA 22313-1450
www.uspto.gov

Paper No. 05052005

William J. Sapone
Coleman Sudo Sapne P.C.
714 Colorado Avenue
Bridgeport, CT 06605

COPY MAILED

MAY 2 6 2005

OFFICE OF PETITIONS

In re Application of Whitty Application No. 10/415285 Filed: April 28, 2003 Attorney Docket No. 780/9-1808	: : : : :	DECISION ON PETITION 37 CFR 1.137(b)

This is a decision on the petition under 37 CFR 1.137(b), filed 2/14/2005, to revive the above-identified application.

The petition is **GRANTED**.

The instant application became abandoned for failure to reply to the nonfinal office action mailed July 26, 2004, which set a shortened statutory period for reply of three months. As no reply was received, and no extensions of time were obtained, this application became abandoned on October 26, 2004.

Petitioner has met the requirements for filing a grantable petition under 37 CFR 1.137(b).

This application is being referred to TC 1723 for consideration of the reply filed February 14. 2005.
Any questions concerning this matter may be directed to Gene Kim at (571) 272-6052, or in his absence, the undersigned at (571)272-3217.

Brian Hearn

Brian Hearn
Petitions Examiner
Office of Petitions
Office of the Deputy Commissioner
for Patent Examination Policy

PTO/SB/64 (09-04)
Approved for use through 07/31/2008. OMB 0651-0031
U.S. Patent and Trademark Office; U.S. DEPARTMENT OF COMMERCE
Under the Paperwork Reduction Act of 1995, no persons are required to respond to a collection of information unless it displays a valid OMB control number.

PETITION FOR REVIVAL OF AN APPLICATION FOR PATENT ABANDONED UNINTENTIONALLY UNDER 37 CFR 1.137(b)

Docket Number (Optional) 780/9-1808

First named inventor: Ross Anthony WHITTY

Application No.: 10/415,285

Art Unit: 3723

Filed: April 28, 2003

Examiner: George Binh Minh Nguyen

Title: SANDER

Attention: Office of Petitions
Mail Stop Petition
Commissioner for Patents
P.O. Box 1450
Alexandria, VA 22313-1450
FAX (703) 872-9306

NOTE: If information or assistance is needed in completing this form, please contact Petitions Information at (703) 305-9282.

The above-identified application became abandoned for failure to file a timely and proper reply to a notice or action by the United States Patent and Trademark Office. The date of abandonment is the day after the expiration date of the period set for reply in the office notice or action plus an extensions of time actually obtained.

APPLICANT HEREBY PETITIONS FOR REVIVAL OF THIS APPLICATION

NOTE: A grantable petition requires the following items:
(1) Petition fee;
(2) Reply and/or issue fee;
(3) Terminal disclaimer with disclaimer fee - required for all utility and plant applications filed before June 8, 1995; and for all design applications; and
(4) Statement that the entire delay was unintentional.

1. Petition fee
☑ Small entity-fee $ 750 (37 CFR 1.17(m)). Applicant claims small entity status. See 37 CFR 1.27.
☐ Other than small entity – fee $ _____ (37 CFR 1.17(m))

2. Reply and/or fee
A. The reply and/or fee to the above-noted Office action in the form of Amendment (identify type of reply):
☐ has been filed previously on _____.
☑ is enclosed herewith.

B. The issue fee and publication fee (if applicable) of $ _____.
☐ has been paid previously on _____.
☐ is enclosed herewith.

This collection of information is required by 37 CFR 1.137(b). The information is required to obtain or retain a benefit by the public which is to file (and by the USPTO to process) an application. Confidentiality is governed by 35 U.S.C. 122 and 37 CFR 1.11 and 1.14. This collection is estimated to take 1.0 hour to complete, including gathering, preparing, and submitting the completed application form to the USPTO. Time will vary depending upon the individual case. Any comments on the amount of time you require to complete this form and/or suggestions for reducing this burden, should be sent to the Chief Information Officer, U.S. Patent and Trademark Office, U.S. Department of Commerce, P.O. Box 1450, Alexandria, VA 22313-1450. DO NOT SEND FEES OR COMPLETED FORMS TO THIS ADDRESS. SEND TO: Mail Stop Petition, Commissioner for Patents, P.O. Box 1450, Alexandria, VA 22313-1450.

If you need assistance in completing the form, call 1-800-PTO-9199 and select option 2.

05/26/2005 OKELLEY 00000015 040838 10415285
01 FC:2453 750.00 DA

04 MAR 2004

UNITED STATES PATENT AND TRADEMARK OFFICE

COMMISSIONER FOR PATENTS
UNITED STATES PATENT AND TRADEMARK OFFICE
P.O. BOX 1450
ALEXANDRIA, VA 22313-1450
www.uspto.gov

BORDEN LADNER GERVAIS
100 Queen Street, Suite 1100
Ottawa, ON K1P 1J9
CANADA

In re Application of:	:	
STEWART, James, et al.	:	
U.S. Application No.: 10/415,294	:	DECISION ON PETITION
PCT No.: PCT/CA01/01508	:	
International Filing Date: 26 October 2001	:	
Priority Date: 26 October 2000	:	
Attorney's Docket No.: PAT 537W-2	:	
For: AGROCHEMICAL FORMULATION AID	:	
COMPOSITION AND USES THEREOF	:	

This decision is issued in response to applicant's "Request For Response To Be Accepted" filed 19 February 2004 and the "Petition To The Director Under 37 CFR 1.181" filed 25 February 2004 which seek to confirm the filing of a response to the Notification Of Missing Requirements on 22 September 2003. No petition fee is required.

BACKGROUND

On 26 October 2001, applicant filed international application PCT/CA01/01508 which claimed a priority date of 26 October 2000 and which designated the United States. On 02 May 2002, a copy of the International Application was communicated to the United States Patent And Trademark Office (USPTO) by the International Bureau (IB). The deadline for payment of the basic national fee was thirty months from the priority date, i.e., 28 April 2003 (26 April 2003 was a Saturday).

On 28 April 2003, applicant filed a transmittal letter for entry into the national stage in the United States accompanied by, among other materials, payment for the basic national fee.

On 19 August 2003, the United States Designated/Elected Office (DO/EO/US) mailed a Notification Of Missing Requirements (Form PCT/DO/EO/905) indicating that an oath or declaration in compliance with 37 CFR 1.497 was required.

On 19 February 2004, applicant filed a "Request For Response To Be Accepted." This submission asserts that on 22 September 2003, applicant filed via facsimile a timely response to the Notification Of Missing Requirements that included an executed declaration. Attached to the petition is a copy of an "Auto-Reply Facsimile Transmission from the USPTO" confirming receipt of an 8 page facsimile from applicant on 22 September 2003, and a copy of a declaration.

On 25 February 2004, applicant filed the petition under 37 CFR 1.181 considered herein. Attached to the petition are copies of the materials purportedly filed on 22 September 2003, as well as a copy of the "Auto-Reply Facsimile Transmission from the USPTO" confirming receipt of an 8 page facsimile from applicant on 22 September 2003.

DISCUSSION

Based on applicant's statements in the petition under 37 CFR 1.181, the attached materials and the "Auto-Reply Facsimile Transmission from the USPTO" (with the cetificate of transmission contained thereon), for purposes of timeliness, the materials attached to the present petition (and specifically, the executed declaration), will be treated as having been filed on 22 September 2003. The submission was therefore a timely response to the Notification Of Missing Requirements mailed 19 August 2003 (it is noted that, for all purposes other than timeliness, the materials will be treated as having been filed on 24 February 2004, the date the petition was filed).

Based on this finding, applicant's alternative petition (contained in the 19 February 2004), requesting acceptance of the declaration with payment of a four month extension fee, is moot.

A review of the declaration attached to the petition confirms that the declaration is in compliance with 37 CFR 1.497.

CONCLUSION

Applicants' petition under 37 CFR 1.181 is **GRANTED**. The materials attached to the present petition under 37 CFR 1.181, including the executed declaration, are considered (for timeliness considerations) to have been filed on 22 September 2003 as a timely response to the Notification Of Missing Requirements.

This application is being returned to the National Stage Processing Branch of the Office of PCT Operations for further processing in accord with this decision. The date under 35 U.S.C. 371(c)(1), (c)(2) and (c)(4) is 25 February 2004.

Richard M. Ross
PCT Petitions Attorney
PCT Legal Office
Telephone: (703) 308-6155
Facsimile: (703) 308-6459

UNITED STATES PATENT AND TRADEMARK OFFICE

#3

COMMISSIONER FOR PATENTS
UNITED STATES PATENT AND TRADEMARK OFFICE
WASHINGTON, D.C. 20231
www.uspto.gov

06 MAY 2003

Birch, Stewart, Kolasch & Birch, LLP
P.O. Box 747
Falls Church, VA 22040-0747

In re Application of STRIDSBERG	:	
U.S. Application No.: 10/415,298	:	DECISION ON PETITION
Int. Application No.: PCT/SE01/02313	:	
Int. Filing Date: 22 October 2001	:	UNDER 37 CFR 1.137(b)
Priority Date: 22 October 2000	:	
Attorney Docket No.: 1291-0208P	:	
For: POSITION TRANSDUCER	:	

This is in response to applicant's "Petition for Revival of an International Application for Patent Designating the U.S. Abandoned Unintentionally Under 37 C.F.R. § 1.137(b)" filed 28 April 2003.

BACKGROUND

On 22 October 2001, applicant filed international application PCT/SE01/02313, which claimed priority of an earlier Sweden application filed 22 October 2000. A copy of the international application was communicated to the USPTO from the International Bureau on 22 October 2001. A Demand for international preliminary examination, in which the United States was elected, was filed prior to the expiration of nineteen months from the priority date. Accordingly, the thirty-month period for paying the basic national fee in the United States expired at midnight on 22 April 2003.

International application PCT/SE01/02313 became abandoned as to the United States for failure to timely pay the basic national fee.

On 28 April 2003, applicant filed the present petition. The petition states that it is accompanied by a proper response under 35 U.S.C. 371, the petition fee set forth in 37 CFR 1.17(m), and a statement that abandonment of the application was unintentional.

DISCUSSION

Under 37 CFR 1.137(b), a petition requesting that an application be revived on the grounds of unintentional abandonment must be accompanied by: (1) the required reply unless previously filed, (2) the petition fee as set forth in 37 CFR 1.17(m), (3) a statement that the entire

delay in filing the required reply from the due date for the reply until the filing of a grantable petition was unintentional, and (4) a terminal disclaimer if the application was filed before 08 June 1995.

With regard to item (1), although the filing of a continuation application would be an appropriate response under 37 CFR 1.137(b), a review of the application file reveals that no specification or drawings are present, contrary to the assertion in the petition.

With regard to item (2), applicant has provided the required petition fee.

With regard to item (3), applicant has provided the required statement.

With regard to item (4), because the international application was filed after 08 June 1995, no terminal disclaimer is required.

CONCLUSION

For the reasons above, the petition under 37 CFR 1.137(b) is DISMISSED without prejudice.

If reconsideration on the merits of the petition is desired, a proper response must be filed within TWO (2) MONTHS from the mail date of this decision. Extensions of time are available under 37 CFR 1.136(a). Any reconsideration request should include a cover letter entitled "Renewed Petition Under 37 CFR 1.137(b)". No additional petition fee is required.

Please direct further correspondence with respect to this matter to Mail Stop PCT, Commissioner for Patents, Office of PCT Legal Administration, P.O. Box 1450, Alexandria, Virginia 22313-1450, with the contents of the letter marked to the attention of the Office of PCT Legal Administration.

Bryan Tung
PCT Legal Examiner
PCT Legal Office

Telephone: 703-308-6614
Facsimile: 703-308-6459

15 OCT 2003

#5

UNITED STATES PATENT AND TRADEMARK OFFICE

COMMISSIONER FOR PATENTS
UNITED STATES PATENT AND TRADEMARK OFFICE
WASHINGTON, D.C. 20231
www.uspto.gov

Birch, Stewart, Kolasch & Birch, LLP
P.O. Box 747
Falls Church, VA 22040-0747

In re Application of STRIDSBERG	:	
U.S. Application No.: 10/415,298	:	DECISION ON PETITION
Int. Application No.: PCT/SE01/02313	:	
Int. Filing Date: 22 October 2001	:	UNDER 37 CFR 1.137(b)
Priority Date: 22 October 2000	:	
Attorney Docket No.: 1291-0208P	:	
For: POSITION TRANSDUCER	:	

This is in response to applicant's "Renewed Petition Under 37 C.F.R. § 1.137(b)" filed 06 June 2003.

BACKGROUND

On 22 October 2001, applicant filed international application PCT/SE01/02313, which claimed priority of an earlier Sweden application filed 22 October 2000. A copy of the international application was communicated to the USPTO from the International Bureau on 22 October 2001. A Demand for international preliminary examination, in which the United States was elected, was filed prior to the expiration of nineteen months from the priority date. Accordingly, the thirty-month period for paying the basic national fee in the United States expired at midnight on 22 April 2003.

International application PCT/SE01/02313 became abandoned as to the United States for failure to timely pay the basic national fee.

On 28 April 2003, applicant filed a petition under 37 CFR 1.137(b).

On 06 May 2003, this Office mailed a decision dismissing the 28 April 2003 petition.

On 06 June 2003, applicant filed the present renewed petition.

DISCUSSION

The renewed petition is accompanied by a copy of a specification and drawings purportedly filed on 28 April 2003. The evidence of record is sufficient to establish that the

specification and drawings were originally filed on 28 April 2003. Specifically, the copy of the return postcard, which includes a specification and drawings in its itemized contents and which bears a USPTO date stamp of 28 April 2003, serves as *prima facie* evidence that the specification and drawings were received by the USPTO on 28 April 2003.

A review of the application file for U.S. Application No. 10/415,298 and the application file for U.S. Application No. 10/423,931 reveals that two application numbers were inadvertently generated for the same application papers. Accordingly, U.S. Application No. 10/423,931 will no longer be active for the present application.

Applicant has satisfied all of the requirements for a petition under 37 CFR 1.137(b).

CONCLUSION

For the reasons above, the renewed petition under 37 CFR 1.137(b) is GRANTED.

The application is being forwarded to the Office of Initial Patent Examination for processing in accordance with this decision including: (1) merging the papers of U.S. Application No. 10/423,931 into the present application file, (2) removing U.S. Application No. 10/423,931 as an active serial number, and (3) processing U.S. Application No. 10/415,298 as a continuation of international application PCT/SE01/02313.

Bryan Tung
PCT Legal Examiner
PCT Legal Office

Telephone: 703-308-6614
Facsimile: 703-308-6459

17 JUN 2004

UNITED STATES PATENT and TRADEMARK OFFICE

COMMISSIONER FOR PATENTS
UNITED STATES PATENT AND TRADEMARK OFFICE
P.O BOX 1450
ALEXANDRIA, VA 22313-1450
www.uspto.gov

David A. GREENLEE
P.O. Box 340557
COLUMBUS, OH 43234-0557

In re Application of	:	DECISION ON
Stephen RAWLINGS et al	:	
Application No.: 10/415,321	:	
PCT No.: PCT/US01/49236	:	PETITION
Int. Filing Date: 20 October 2001	:	
Priority Date: 20 October 2000	:	
Attorney's Docket No.: 30522	:	
For: FOLDING CONVERTIBLE TOP WITH INTEGRAL BOOT :	:	

This decision is responsive to applicants' "RESPONSE TO DECISION ON PETITION UNDER 37 CFR 1.137(b)" filed on 07 April 2004 requesting the acceptance of the executed declaration.

BACKGROUND

In a decision from this Office on 04 February 2004, the declaration submitted was not accepted because it did not comply with 37 CFR 1.497(a) and (b) because applicants submitted a composite declarations, which were incomplete.

On 07 April 2004 applicants submitted a second renewed petition under 37 CFR 1.137(b) submitting a proper executed declaration.

DISCUSSION

The declarations filed on 07 April 2004 is a properly executed declaration that satisfies the conditions set forth under 37 CFR 1.497(a) and (b).

DECISION

The petition is **GRANTED.**

This application is being returned to the United States Designated/Elected Office (DO/EO/US) for continued processing. The 35 USC 371(c)(1), (c)(2), and (c)(4) date of this application is **07 April 2004**.

Rafael Bacares
PCT Legal Examiner
PCT Legal Examiner
Work (703) 308-6312
Fax (703) 308-6459

10 FEB 2004

10-APR-04
File declaration

UNITED STATES PATENT and TRADEMARK OFFICE

COMMISSIONER FOR PATENTS
UNITED STATES PATENT AND TRADEMARK OFFICE
P.O BOX 1450
ALEXANDRIA, VA 22313-1450
www.uspto.gov

RECEIVED
FEB 16 2004
DAVID A. GREENLEE

DAVID A. GREENLEE
P.O BOX 340557
COLUMBUS, OH 43234-0557

In re Application of	:	DECISION ON
STEPHEN P. RAWLINGS et al	:	
Application No.: 10/415,321	:	
PCT No.: PCT/US01/49236	:	
Int. Filing Date: 20 October 2001	:	PETITION UNDER
Priority Date: 20 October 2000	:	
Attorney's Docket No.: 30522	:	
For: FOLDING CONVERTIBLE TOP WITH	:	
INTEGRAL BOOT	:	37 CFR 1.137(b)

This decision is in response to applicants' "Petition For Revival Of An Application For Abandonment Unintentionally Under 37 CFR 1.137(b)," filed on 28 April 2003.

BACKGROUND

On 20 October 2001, this international application was filed, claiming an earliest priority date of 20 October 2000.

A Demand electing the United States was filed in this international application on 20 May 2002. The deadline for paying the basic national fee in the United States under 35 U.S.C. 371 was 20 April 2003.

On 28 April 2003, petitioner filed the instant petition under 37 CFR 1.137(b) and Transmittal letter for entry into the national stage in the United States, which was accompanied by, *inter alia*, basic national fee and an improper executed declaration.

DISCUSSION

A grantable petition to revive an abandoned application under 37 CFR 1.137(b) must be accompanied by (1) the required reply, unless previously filed. In a nonprovisional application abandoned for failure to prosecute, the required reply may be met by the filing of a continuing application; (2) the petition fee as set forth in § 1.17(m); and (3) a statement that the entire delay in filing the required reply from the due date for the reply until the filing of a grantable petition pursuant to this paragraph was unintentional. The Commissioner may require additional information where there is a question whether the delay was unintentional; and (4) any terminal disclaimer (and fee as set forth in § 1.20 (d)) required pursuant to paragraph (c) of this section.

04/12/2004 SNAJARRO 00000068 10415321
01 FC:1617 130.00 OP

Petitioner has provided: (1) the proper reply by submitting the basic national filing fee, (2) the petition fee set forth in §1.17(m) and (3) the proper statement under 137(b)(3). In this application, no terminal disclaimer is required.

Accordingly, the petition is deemed to satisfy requirements (1), (2), (3), and (4) under 37 CFR 1.137(b).

Petitioner submitted a composite declaration comprising of two sets of declarations each declaration names only one inventor out of the two and is signed respectively by that inventor. The composite declaration is defective because 37 CFR 1.497(a) and (b) requires that each declaration must be complete and identify each inventor. See MPEP § 602. In this case each declaration must identifying both inventors in each declaration although each declaration may be signed separately by each of the two inventors. In addition, the required fee of $130.00 due to the surcharge under 1.492(e) for late filing of the declaration will need to be submitted.

DECISION

The petition under 37 CFR 1.137(b) is **GRANTED**.

Accordingly, the application does not meet the requirements under 35 U.S.C. 371 for entry into the national stage in the US. Applicant is required to provide an oath or declaration in compliance with 37 CFR 1.497(a)-(b) within TWO (2) MONTHS from the mail date of this Decision. Failure to respond will result in the abandonment of the application. Extensions of time under 37 CFR 1.136(a) are available.

Any further correspondence with respect to this matter should be addressed to the Mail Stop PCT, Commissioner for Patents, Office of PCT Legal Administration, P.O. Box 1450, Alexandria, Virginia 22313-1450, with the contents of the letter marked to the attention of the Office of PCT Legal Administration.

Rafael Bacares
PCT Legal Examiner
PCT Legal Office

Telephone: (703) 308-6312

10 FEB 2004

#3

UNITED STATES PATENT and TRADEMARK OFFICE

COMMISSIONER FOR PATENTS
UNITED STATES PATENT AND TRADEMARK OFFICE
P.O BOX 1450
ALEXANDRIA, VA 22313-1450
www.uspto.gov

DAVID A. GREENLEE
P.O BOX 340557
COLUMBUS, OH 43234-0557

In re Application of	:	DECISION ON
STEPHEN P. RAWLINGS et al	:	
Application No.: 10/415,321	:	
PCT No.: PCT/US01/49236	:	
Int. Filing Date: 20 October 2001	:	PETITION UNDER
Priority Date: 20 October 2000	:	
Attorney's Docket No.: 30522	:	
For: FOLDING CONVERTIBLE TOP WITH	:	
INTEGRAL BOOT	:	37 CFR 1.137(b)

This decision is in response to applicants' "Petition For Revival Of An Application For Abandonment Unintentionally Under 37 CFR 1.137(b)," filed on 28 April 2003.

BACKGROUND

On 20 October 2001, this international application was filed, claiming an earliest priority date of 20 October 2000.

A Demand electing the United States was filed in this international application on 20 May 2002. The deadline for paying the basic national fee in the United States under 35 U.S.C. 371 was 20 April 2003.

On 28 April 2003, petitioner filed the instant petition under 37 CFR 1.137(b) and Transmittal letter for entry into the national stage in the United States, which was accompanied by, *inter alia*, basic national fee and an improper executed declaration.

DISCUSSION

A grantable petition to revive an abandoned application under 37 CFR 1.137(b) must be accompanied by (1) the required reply, unless previously filed. In a nonprovisional application abandoned for failure to prosecute, the required reply may be met by the filing of a continuing application; (2) the petition fee as set forth in § 1.17(m); and (3) a statement that the entire delay in filing the required reply from the due date for the reply until the filing of a grantable petition pursuant to this paragraph was unintentional. The Commissioner may require additional information where there is a question whether the delay was unintentional; and (4) any terminal disclaimer (and fee as set forth in § 1.20 (d)) required pursuant to paragraph (c) of this section.

Petitioner has provided: (1) the proper reply by submitting the basic national filing fee, (2) the petition fee set forth in §1.17(m) and (3) the proper statement under 137(b)(3). In this application, no terminal disclaimer is required.

Accordingly, the petition is deemed to satisfy requirements (1), (2), (3), and (4) under 37 CFR 1.137(b).

Petitioner submitted a composite declaration comprising of two sets of declarations each declaration names only one inventor out of the two and is signed respectively by that inventor. The composite declaration is defective because 37 CFR 1.497(a) and (b) requires that each declaration must be complete and identify each inventor. See MPEP § 602. In this case each declaration must identifying both inventors in each declaration although each declaration may be signed separately by each of the two inventors. In addition, the required fee of $130.00 due to the surcharge under 1.492(e) for late filing of the declaration will need to be submitted.

DECISION

The petition under 37 CFR 1.137(b) is **GRANTED**.

Accordingly, the application does not meet the requirements under 35 U.S.C. 371 for entry into the national stage in the US. Applicant is required to provide an oath or declaration in compliance with 37 CFR 1.497(a)-(b) within TWO (2) MONTHS from the mail date of this Decision. Failure to respond will result in the abandonment of the application. Extensions of time under 37 CFR 1.136(a) are available.

Any further correspondence with respect to this matter should be addressed to the Mail Stop PCT, Commissioner for Patents, Office of PCT Legal Administration, P.O. Box 1450, Alexandria, Virginia 22313-1450, with the contents of the letter marked to the attention of the Office of PCT Legal Administration.

Rafael Bacares
PCT Legal Examiner
PCT Legal Office

Telephone: (703) 308-6312
Facsimile: (703) 308-6459

05 APR 2006

UNITED STATES PATENT AND TRADEMARK OFFICE

H 15

Commissioner for Patents
United States Patent and Trademark Office
Washington, D.C. 20231
www.uspto.gov

ISIS PHARMACEUTICALS INC
1896 RUTHERFORD RD.
CARLSBAD, CA 92008

In re Application of	:	
BENNETT, Frank, C., et al.	:	
U.S. Application No.: 10/415,324	:	DECISION ON PETITION
PCT No.: PCT/US01/50743	:	TO REVIVE UNDER 37 CFR
International Filing Date: 13 November 2001	:	1.137(a)
Priority Date: 17 November 2000	:	
Attorney's Docket No.: RTSP-0484	:	
For: ANTISENSE MODULATION OF INTEGRIN	:	
BETA 4 BINDING PROTEIN EXPRESSION	:	

This decision is issued in response to applicants' "Petition To Revive - Unavoidable Abandonment" filed on 29 July 2005.

BACKGROUND

On 13 November 2001, applicants filed international application PCT/US01/50743. The application claimed a priority date of 17 November 2000 and designated the United States. The deadline for payment of the basic national fee was thirty months from the priority date, i.e., 17 May 2003.

On 25 April 2003, applicants filed a Transmittal Letter seeking entry into the national stage in the United States for PCT/US01/50743 accompanied by, among other materials, payment of the basic national fee.

On 07 July 2003, the United States Designated/Elected Office (DO/EO/US) mailed a "Notification Of Missing Requirements" (Form PCT/DO/EO/905) indicating that an executed oath or declaration in compliance with 37 CFR 1.497 and the surcharge for filing the oath or declaration later than thirty months after the priority date was required.

On 25 August 2003, applicants filed a response to the Notification Of Missing Requirements that included an executed declaration and the required surcharge.

On 02 June 2005, the DO/EO/US mailed a "Notification Of Defective Response (Form PCT/DO/EO/916). The Notification Of Defective Response acknowledged receipt of the 25 August 2003 response, but went on to state that the paper copy of the sequence listing in the application file did not match the computer readable form (CRF) of the sequence listing. The Notification stated that these sequences were required to be identical, and that a statement under 37 CFR 1.821 confirming this fact was required. The Notification also identified these sequence

listing materials as "requirements set forth in the NOTIFICATION of MISSING REQUIREMENTS mailed 07/07/2003" that had not been completed, and provided a non-extendable one-month response period.

On 29 July 2005, applicants filed a "Response To Notification Of Defective Response." The submission includes materials responsive to the sequence listing requirements set forth in the Notification Of Defective Response and the "Petition To Revive - Unavoidable Abandonment" considered herein. The petition argues that the Notification Of Defective Response was mailed to an incorrect address and that the delay in responding to the Notification Of Defective Response was therefore unavoidable.

DISCUSSION

As discussed above, the Notification Of Missing Requirements mailed 07 July 2003 identified only two outstanding requirements in the present application: an executed oath or declaration in compliance with 37 CFR 1.497 and the surcharge for filing the oath or declaration later than thirty months after the priority date. The Notification Of Missing Requirements did not identify any deficiency or outstanding requirement with respect to the sequence listing materials. Applicants' 25 August 2003 response to the Notification of Missing Requirements included both the requirements identified in the Notification Of Missing Requirements, that is, an executed declaration and the required surcharge. Applicants' 25 August 2003 submission was therefore a complete and proper response to the Notification Of Missing Requirements.

The 05 June 2005 mailing of a Notification Of Defective Response requiring the submission of sequence listing materials that had not been identified as outstanding requirements in the Notification Of Missing Requirements was therefore improper. The Notification Of Defective Response mailed 05 June 2005 is therefore appropriately vacated.

Based on the above, the present application did not become abandoned for failure to file a timely response to the Notification Of Defective Response. Applicants' petition to revive the application is therefore moot.

CONCLUSION

The Notification Of Defective Response (Form PCT/DO/EO/916) mailed 02 June 2005 is hereby **VACATED** and the present application is not abandoned for failure to file a timely response to such abandoned Notification.

The petition to revive the application under 37 CFR 1.137(a) is therefore **DISMISSED AS MOOT**.

This application is being forwarded to the National Stage Processing Branch of the Office Of PCT Operations for further processing in accordance with this decision, including a review of the sequence listing materials filed by applicants on 29 July 2005. If these sequence

listing materials are not adequate, then a new Notification Of Missing Requirements should be issued identifying the required materials.

The date under 35 U.S.C. 371(c)(1), (c)(2), and (c)(4) is 25 August 2003.

Richard M. Ross
Attorney Advisor
Office of PCT Legal Administration
Telephone: (571) 272-3296
Facsimile: (571) 273-0459

12 SEP 2005

UNITED STATES PATENT AND TRADEMARK OFFICE

Commissioner for Patents
United States Patent and Trademark Office
P.O. Box 1450
Alexandria, VA 22313-1450
www.uspto.gov

TAKEDA PHARMACEUTICALS NORTH AMERICA, INC
INTELLECTUAL PROPERTY DEPARTMENT
475 HALF DAY ROAD
SUITE 500
LINCOLNSHIRE IL 60069

In re Application of	:	
KOYAMA, Nobuyuki et al.	:	
Application No.: 10/415,326	:	DECISION ON
PCT No.: PCT/JP01/09478	:	
Int. Filing Date: 29 October 2001	:	PETITION
Priority Date: 30 October 2000	:	
Attorney Docket No.: 2807 US0P	:	UNDER 37 CFR 1.181
For: NOVEL GENE OVEREXPRESSED IN	:	
HEART AND SKELETAL MUSCLE	:	
AND USE THEREOF	:	

This decision is in response to applicant's "Request For Reconsideration of Holding Of Abandonment," filed on 01 March 2005.

BACKGROUND

On 29 October 2001, applicant filed international application PCT/JP01/09478, claiming a priority date of 30 October 2000. A copy of the international application was communicated to the United States Patent and Trademark Office (USPTO) from the International Bureau on 10 May 2002. The deadline for entry into the national stage in the United States was thirty months from the priority date, 30 April 2003.

On 28 April 2003, applicant filed a transmittal letter for entry into the national stage in the United States, accompanied by the basic national fee.

On 22 July 2004, the Office mailed Notification to Comply With Requirements For Patent Applications Containing Nucleotide And/Or Amino Acid Sequence Disclosures (Form PCT/DO/EO/922) indicating that a sequence listing in computer readable form and the necessary statement were required.

On 15 September 2004, applicant submitted a sequence listing in computer readable form and the required statement.

On 07 October 2004, the Office corrected errors in the Sequence listing and entered it.

On 20 October 2004, the Office mailed Notification of Defective Response Abandonment (Form PCT/DO/EO/918) indicating that applicants failed to properly respond to the 22 July 2004 Notification..

On 01 March 2005, applicants submitted the instant petition accompanied by a copy of the 15 September 2004 submission.

DISCUSSION

As indicated above, applicants submitted a computer readable form and necessary statement on 15 September 2004. The notification of abandonment issued in error.

CONCLUSION

For the reasons set forth above, the petition under 37 CFR 1.181 is **GRANTED**.

The Notice of Defective Response Abandonment (Form PCT/DO/EO/918) mailed 20 October 2004 is **VACATED**.

This application is being forwarded to the National Stage Processing Branch of the Office of PCT Operations for further processing in accordance with this decision. The date under 35 U.S.C. §§371(c)(1), (c)(2) and (c)(4) is 28 April 2003.

Erin P. Thomson

Erin P. Thomson
Attorney Advisor
PCT Legal Administration

Telephone: 571-272-3292
Facsimile: 571-273-0459

#7

UNITED STATES PATENT AND TRADEMARK OFFICE

Commissioner for Patents
United States Patent and Trademark Office
P.O. Box 1450
Alexandria, VA 22313-1450
www.uspto.gov

29 SEP 2006

Christopher J. McDonald
Hoffman, Wasson & Gilter, P.C.
2461 South Clark Street
Suite 522 - Crystal Center 2
Arlington, VA 22202

In re Application of	:	
STENHOUSE	:	DECISION ON PETITIONS
U.S. Application No.: 10/415,337	:	
PCT No.: PCT/AU01/01422	:	UNDER 37 CFR 1.181
Int. Filing Date: 06 November 2001	:	
Priority Date: 07 November 2000	:	AND 1.137(b)
Attorney Docket No.: A-8559	:	
For: CARPET STRETCHER	:	

This decision is in response to applicant's "Re-Submission of Petition to Revive" filed 05 January 2006 and supplemented by an additional filing on 30 May 2006 in the United States Patent and Trademark Office (USPTO). The filing is being treated as a petition under 37 CFR 1.181 to accept the copy of the underlying petition to revive originally filed on 30 June 2005. No petition fee is required for the petition under 37 CFR 1.181.

BACKGROUND

On 06 November 2001, applicant filed international application PCT/AU01/01422, which claimed priority of an earlier application filed 07 November 2000. Pursuant to 37 CFR 1.495, the thirty-month period for paying the basic national fee in the United States expired at midnight on 07 May 2003.

On 02 May 2003, applicant filed a transmittal letter for entry into the national stage in the United States, which was accompanied by the requisite basic national fee as required by 35 U.S.C. 371(c)(1) and an un-executed declaration.

On 05 September 2003, applicant was mailed a "NOTIFICATION OF MISSING REQUIREMENTS UNDER 35 U.S.C. 371" (Form PCT/DO/EO/905) informing applicant of the need to provide an executed oath or declaration of the inventor, in compliance with 37 CFR 1.497(a) and (b), identifying the application by the International application number and international filing date. Applicant was afforded two months to file the response.

On 18 October 2004, applicant was mailed a NOTIFICATION OF ABANDONMENT (Form PCT/DO/EO/909) informing applicant that applicant had failed to respond to the Form PCT/DO/EO/905 mailed 05 September 2003 within the time period set therein and that above-identified application was abandoned as to the United States.

On 05 January 2006, applicant filed the present petition under 37 CFR 1.181 to accept the filed copy of a petition to revive pursuant to 37 CFR 1.137(b) originally filed on 30 June 2005. In addition, applicant filed another copy of the petition on 30 May 2006. A search of the application file finds the 05 January 2006 filing contained therein; as such, there is no need to consider the 30 May 2006 filing.

DISCUSSION

I. Petition Under 37 CFR 1.181

The best evidence of what was actually received by the Office is a postcard receipt containing a specific itemization of all the items being submitted. See MPEP 503. Applicant's 05 January 2006 filing includes a copy of a date-stamped postcard receipt. The postcard identifies the application by applicant, application number, title and docket number. Among the items listed on the receipt are: Petition to Revive; Declaration/Power of Attorney (with the signed box checked) and check in the amount of $815.00." The receipt is stamped "OIPE JC25 Patent and Trademark Office JUN 30 2005." Thus, it is clear that applicant filed these items on 30 June 2005. As such, it is proper to accept the papers filed on 05 January 2006 as having been filed 30 June 2005. Thus, it is proper to grant applicant's petition under 37 CFR 1.181.

II. Petition Under 37 CFR 1.137(b)

The petition to revive under 37 CFR 1.137(b) filed 30 June 2005 in the above-captioned application is hereby **GRANTED** as follows:

Applicant's statement that "the entire delay between the abandonment of the application and the filing of this petition was unintentional" is being interpreted to mean that the entire delay in providing a compliant declaration in response to the Form PCT/DO/EO/905 from the due date for filing a proper reply until the filing of a grantable petition pursuant to this paragraph was unintentional. If this is an incorrect reading of applicant's statement applicant should contact the PCT Legal Office immediately. Applicant's statement and the prompt filing of the petition satisfies the requirement of 37 CFR 1.137(b)(3).

A review of the application file reveals that applicant has now provided a compliant combined declaration and power of attorney signed by the inventor. Therefore, the request to revive the application abandoned under 35 U.S.C. 371(d) is granted as to the National stage in the United States of America. Further, a review of the application file reveals that all of the requirements of 35 U.S.C. 371 for entry into the national stage in the United States have been satisfied.

CONCLUSION

Applicant's petition under 37 CFR 1.181 is **GRANTED**.

Applicant's petition under 37 CFR 1.137(b) is **GRANTED**.

The application has an international filing date of 06 November 2001 under 35 U.S.C. 363 and will be given a date of **30 June 2005** under 35 U.S.C. 371(c)(1), (c)(2) and (c)(4).

This application is being returned to the United States Designated/Elected Office (DO/EO/US) for treatment in accordance with this decision.

Derek A. Putonen
Attorney Advisor
Office of PCT Legal Administration
Tel: (571) 272-3294
Fax: (571) 273-0459

10 JAN 2005

UNITED STATES PATENT AND TRADEMARK OFFICE

COMMISSIONER FOR PATENTS
UNITED STATES PATENT AND TRADEMARK OFFICE
P.O. BOX 1450
ALEXANDRIA, VA 22313-1450
www.uspto.gov

John C. Holman
JACOBSON HOLMAN, PLLC
400 Seventh Street, N.W.
Washington, D.C. 20004-2201

In re Application of	:
OKADA, Keiji	: DECISION ON
US Application No.: 10/415,344	:
PCT Application No.: PCT/JP01/09702	:
Int. Filing Date: 06 November 2001	: PETITION UNDER
Priority Date: 06 November 2000	:
Attorney's File Reference: P68831US0	:
For: HUMIDIFIER	: 37 CFR 1.181

This is a decision on applicant's "Petition To Withdraw Holding of Abandonment" filed on 10 November 2004, which is being treated as a petition under 37 CFR 1.181.

BACKGROUND

On 06 November 2001, applicant filed international application PCT/JP01/09702. The international application claims a priority date of 06 November 2000 and designates the United States. The deadline for entry into the United States National Stage was thirty months from the priority date, that is 06 May 2003.

On 05 May 2003, applicant filed national stage papers in the United States Designated/Elected Office (DO/EO/US). The submission was accompanied by, *inter alia,* a copy of the international application.

On 13 August 2003, a Notification of Missing Requirements Under 35 U.S.C 371 (Form PCT/DO/EO/905) was mailed to applicant, requiring the submission of an executed oath or declaration of the inventors, in compliance with 37 CFR 1.497 (a) and (b), identifying the application by the International application number and international filing date, with a deadline to file the requisite response by 13 October 2003.

On 13 October 2004, a Notification of Abandonment (Form PCT/DO/EO/909) was mailed to applicant, indicating that this international application had become abandoned with respect to the national stage in the United States for failure to timely reply to the Notification of Missing Requirements.

On 10 November 2004, applicant filed the present petition urging that a proper response was filed on 10 October 2003. The petition was accompanied by, *inter alia*, copies of the Response to Notification of Missing Requirements and a Combined Declaration/Power of Attorney.

DISCUSSION

Petitioner requests that the Notification of Abandonment be withdrawn because applicant submitted a timely response to the Notification of Missing Requirements mailed on 13 August 2003. Applicant has submitted, *inter alia*, copies of the Response to Notification of Missing Requirements, Combined Declaration and Power of Attorney, and an itemized postcard listing the aforementioned items. The postcard is stamped with a PCT/PTO receipt stamp dated 10 October 2003. In view of this evidence, it is concluded that the aforementioned items were received on 10 October 2003. Accordingly, applicant completed all the requirements under 35 U.S.C. 371 for entry into the United States on 10 October 2003.

DECISION

The petition under 37 CFR 1.181 to withdraw the holding of abandonment is **GRANTED** and the Notification of Abandonment mailed 13 October 2004 is hereby **VACATED.**

Applicant's claim for priority is acknowledged. The application has an international filing date of 06 November 2001 under 35 U.S.C. 363 and a date of 10 October 2003 under 35 U.S.C. 371(c)(1), (c)(2) and (c)(4).

This application is being forwarded to the National Stage Processing Branch of the International Division for continued processing

Ula Ruddock
Ula Ruddock
PCT Legal Administration Detailee
PCT Special Programs Office
Telephone: 571-272-3279

Richard Cole
PCT Legal Examiner
PCT Legal Office

SPE: T. Denion

SPE RESPONSE FOR CERTIFICATE OF CORRECTION

Paper No.: 062106

DATE : 6/5/06

TO SPE OF : ART UNIT 3748

SUBJECT : Request for Certificate of Correction for Appl. No.: 10/415,360 Patent No.: 6912841

Please respond to this request for a certificate of correction within 7 days.

Please review the requested changes/corrections as shown in the **COCIN** document(s) in the IFW application image. No new matter should be introduced, nor should the scope or meaning of the claims be changed.

Please complete the response (see below) and forward the completed response to scanning using document code **COCX**.

Lamonte M. Newsome
Certificates of Correction Branch
703-308-9390 ext. 112

Thank You For Your Assistance

The request for issuing the above-identified correction(s) is hereby:

Note your decision on the appropriate box.

- [x] **Approved** — **All** changes apply.
- [ ] **Approved in Part** — Specify below which changes **do not** apply.
- [ ] **Denied** — State the reasons for denial below.

Comments: _____

Thomas Denion

THOMAS DENION
SUPERVISORY PATENT EXAMINER
TECHNOLOGY CENTER 3700

SPE — **Art Unit** 3748

UNITED STATES PATENT AND TRADEMARK OFFICE

Commissioner for Patents
United States Patent and Trademark Office
P.O. Box 1450
Alexandria, VA 22313-1450
www.uspto.gov

MAILED

JUL 19 2010

OFFICE OF PETITIONS

FOLEY & LARDNER LLP
150 EAST GILMAN STREET
P.O. BOX 1497
MADISON WI 53701-1497

In re Application Jori Arrakoski Application No. 10/415,372 Filed: August 25, 2003 Attorney Docket No. **088245-0762**	DECISION ON APPLICATION FOR PATENT TERM ADJUSTMENT

This is in response to the REQUEST FOR RECONSIDERATION OF PATENT TERM ADJUSTMENT UNDER 37 C.F.R. §1.705 filed June 4, 2010. Applicant requests that the determination of patent term adjustment be corrected from 798 to 1651 days. Applicant requests this correction in part on the basis that the Office will take in excess of three years to issue this patent and in light of the recent court decision in Wyeth v. Kappos, No. 2009-1120 (Jan. 7, 2010).

As the instant application for patent term adjustment requests reconsideration of the patent term adjustment as it relates to the Office's failure to issue the patent within three years of the filing date, the application for patent term adjustment under 37 CFR 1.705(b) is **DISMISSED as PREMATURE**.

Knowledge of the actual date the patent issues is required to calculate the amount, if any, of additional patent term patentees are entitled to for Office failure to issue the patent within three years. See 37 CFR 1.702(b). (This is true even where a request for continued examination (RCE) was filed). The computer will not undertake the § 1.702(b) calculation until the actual date of issuance of the patent has been determined. Likewise, the computer will not calculate any further Office delay under 37 CFR 1.702(a)(4) or applicant delay under 37 CFR 1.704(c)(10) until the actual date of issuance of the patent has been determined. As such, the Office cannot make a determination on the patent term adjustment relating to those provisions until the patent has issued.

Requesting reconsideration of the patent term adjustment to be indicated on the patent under 37 CFR 1.705(b) based on the initial determination of patent term adjustment

and a projected issuance date of the patent (or even the filing date of the request for continued examination) is premature. Accordingly, it is appropriate to dismiss such a request as premature.

Rather than file an application for patent term adjustment under 37 CFR 1.705(b) contesting the 37 CFR 1.702(b) calculation at the time of the mailing of the notice of allowance, applicants are advised that they may wait until the time of the issuance of the patent and file a request for reconsideration of the patent term adjustment pursuant to 37 CFR 1.705(d). As the USPTO does not calculate the amount of time earned pursuant to 37 CFR 1.702(b) until the time of the issuance of the patent, the Office will consider any request for reconsideration of the patent term adjustment due to an error in the calculation of 37 CFR 1.702(b) to be timely if the request for reconsideration is filed within two months of the issuance of the patent. However, as to all other bases for contesting the initial determination of patent term adjustment received with the notice of allowance, applicants must timely file an application for patent term adjustment prior to the payment of the issue fee.[1]

The Office acknowledges submission of the $200.00 fee set forth in 37 CFR 1.18(e) for consideration of the application for patent term adjustment under 37 CFR 1.705(b).

Any request for reconsideration of the patent term adjustment indicated on the patent must be timely filed within two months after issuance pursuant to 37 CFR 1.705(d) and must include payment of the required fee under 37 CFR 1.18(e).

The Office of Data Management has been advised of this decision. This application is being referred to the Office of Data Management for issuance of the patent.

Telephone inquiries specific to this decision should be directed to Senior Petitions Attorney Patricia Faison-Ball at (571) 272-3212.

Anthony Knight
Director
Office of Petitions

---

[1] For example, if applicants dispute both the calculation of patent term adjustment under 37 CFR 1.702(a)(1) for Office failure to mail a first Office action or notice of allowance not later than fourteen months after the date on which the application was filed, and under 37 CFR 1.702(b) for Office failure to issue a patent within three years of the actual filing date of the application, then applicants must still timely file an application for patent term adjustment prior to the payment of the issue fee to contest the calculation of Office delay in issuing a first Office action or notice of allowance. See 37 CFR 1.705(b) and 35 U.S.C. 154(b)(3)(B). A dispute as to the calculation of the § 1.702(a)(1) period raised on request for reconsideration of patent term adjustment under 37 CFR 1.705(d) will be dismissed as untimely filed.

UNITED STATES PATENT AND TRADEMARK OFFICE

COMMISSIONER FOR PATENTS
UNITED STATES PATENT AND TRADEMARK OFFICE
P.O. BOX 1450
ALEXANDRIA, VA 22313-1450
www.uspto.gov

#6

14 JUL 2003

Incyte Corporation
3160 Porter Drive
Palo Alto, CA 94304

In re Application of TANG et al	:	
U.S. Application No.: 10/415,378	:	
PCT Application No.: PCT/US01/46055	:	DECISION
Int. Filing Date: 25 October 2001	:	
Priority Date Claimed: 27 October 2000	:	
Attorney Docket No.: PI-0270 USN	:	
For: TRANSPORTERS AND ION CHANNELS	:	

This is in response to applicant's "Communication Re Inventor Name Change" filed 25 April 2003, which is being treated as a petition under 37 CFR 1.182.

BACKGROUND

On 25 October 2001, applicant filed international application PCT/US01/46055, which claimed priority of an earlier United States application filed 27 October 2000. A copy of the international application was communicated to the USPTO from the International Bureau on 23 May 2002. A Demand for international preliminary examination, in which the United States was elected, was filed on 15 May 2002, prior to the expiration of nineteen months from the priority date. Accordingly, the thirty-month period for paying the basic national fee in the United States expired on 27 April 2003.

On 25 April 2003, applicant filed national stage papers in the United States Designated/Elected Office (DO/EO/US). The submission was accompanied by, *inter alia*, the basic national fee required by 35 U.S.C. 371(c)(1) and the present petition under 37 CFR 1.182.

DISCUSSION

Inventor Narinder Chawla is listed as Narinder Walia in the international application. Although applicant has submitted a copy of a request under PCT Rule 92bis filed with the International Bureau (IB), the DO/EO/US has not received a Notification of the Recording of a Change (Form PCT/IB/306) which indicates that the requested name changes have been accepted for recording

MPEP 605.04(c) states in relevant part,

> In cases where an inventor's name has been changed after the application has been filed and the inventor desires to change his or her name on the application, he or she must submit a petition under 37 CFR 1.182. . . . The petition must include an appropriate petition fee and an affidavit signed with both names and setting forth the procedure whereby the change of name was effected, or a certified copy of the court order.

Applicant has filed a petition under 37 CFR 1.182 along with an affidavit signed with both names and setting forth the procedure whereby the change of name was effected. The requisite petition fee will be charged to Deposit Account 09-0108 as authorized in the petition.

CONCLUSION

For the reasons above, the petition under 37 CFR 1.182 is GRANTED.

The application has an International Filing Date under 35 U.S.C. 363 of 25 October 2001, and a date under 35 U.S.C. 371(c) of 25 April 2003.

This application is being forwarded to the United States Designated/Elected Office (DO/EO/US) for further processing in accordance with this decision.

Bryan Tung
PCT Legal Examiner
PCT Legal Office

Telephone: 703-308-6614
Facsimile: 703-308-6459

07/16/2003 GFREY1 00000167 090108 10415378
01 FC:1460 130.00 DA

23 NOV 2004

UNITED STATES PATENT AND TRADEMARK OFFICE

COMMISSIONER FOR PATENTS
UNITED STATES PATENT AND TRADEMARK OFFICE
P.O. BOX 1450
ALEXANDRIA, VA 22313-1450
www.uspto.gov

Brian W. Hameder
Ladas & Parry
224 South Michigan Avenue
Suite 1200
Chicago, IL 60604

In re Application of NILSSON PCT No.: PCT/SE01/02362 Application No.: 10/415,397 Int. Filing Date: 26 October 2001 Priority Date: 30 October 2000 Atty. Docket No.: CU-3225 For: SYSTEM AND METHOD FOR PHYSIOLOGICAL DRAINAGE	DECISION ON PETITION UNDER 37 CFR 1.181

This is a decision on applicant's "Petition to Correct Filing Date & Request For Corrected Filing Receipt" filed on 19 November 2004 in the United States Patent and Trademark Office (USPTO). The request is being treated as a petition under 37 CFR 1.181. No petition fee is due.

BACKGROUND

On 26 October 2001, applicant filed international application PCT/SE01/02362 which claimed priority to an earlier application filed 30 October 2000.

On 09 January 2004, applicant was mailed a "Notification of Acceptance" (Form PCT/DO/EO/903) indicating a 371 date of 08 December 2003.

On 19 November 2004, applicant filed the present petition for a corrected filing receipt and for PCT/DO/EO/903.

DISCUSSION

The best evidence of what was actually received by the Office is a postcard receipt containing a specific itemization of all the items being submitted. See MPEP 503. Here, applicant has provided a copy of the date-stamped postcard receipt. The postcard identifies the application by title, applicant and serial number. Among the items listed on the receipt are: Declaration/Power and Fee $170.00. The postcard is stamped "DT12 Rec'd PCT/PTO 06 JUN 2003." In addition, a review of the fee records for the present application shows $170.00 in payments for 06 June 2003. The evidence is sufficient to establish that the executed declaration was received in the USPTO on 06 June 2003. As such, it is proper to **GRANT** applicant's petition at this time.

CONCLUSION

Applicant's petition under 37 CFR 1.181 is **GRANTED**.

The application will be given an international filing date of 26 October 2001 under 35 U.S.C. 363 and a date of **06 June 2003** under 35 U.S.C. 371(c)(1), (c)(2) and (c)(4).

The "Notification of Acceptance of Application Under 35 U.S.C. 371 and 37 CFR 1.494 or 1.495" (Form PCT/DO/EO/903) mailed 09 January 2004 indicating a date of 08 December 2003 under 35 U.S.C. 371(c) is hereby **VACATED**.

This application is being returned to the United States Designated/Elected Office (US/DO/EO) for further processing in accordance with this decision, namely the issuance of a "Notification of Acceptance of Application Under 35 U.S.C. 371 and 37 CFR 1.494 or 1.495" (Form PCT/DO/EO/903) and a corrected filing receipt indicating the correct 371 date as detailed above.

Derek A. Putonen
Attorney Advisor
Office of PCT Legal Administration
Tel: (571) 272-3294
Fax: (571) 273-0459

19 DEC 2003

#7

UNITED STATES PATENT AND TRADEMARK OFFICE

COMMISSIONER FOR PATENTS
UNITED STATES PATENT AND TRADEMARK OFFICE
P.O. BOX 1450
ALEXANDRIA, VA 22313-1450
www.uspto.gov

LADAS & PARRY
224 SOUTH MICHIGAN AVENUE, SUITE 1200
CHICAGO, IL 60604

In re Application of TAKAHASHI Application No.: 10/415,403 PCT No.: PCT/JP01/08968 Int. Filing: 12 October 2001 Priority Date: 06 November 2000 Attorney Docket No.: CU-3226 RJS For: COMPOSITE LENTICULAR LENS SHEET AND PROJECTION SCREEN	COMMUNICATION REGARDING RESPONSE TO NOTIFICATION OF MISSING REQUIREMENTS

This decision is in response to applicant's "Response To Communication Regarding Response to Notification of Missing Requirements" filed 18 November 2003 in the United States Patent and Trademark Office (USPTO) in the above-captioned application and treated as a petition under 37 CFR 1.181. Applicant requests acceptance of a copy of the declaration in lieu of the originally filed declaration filed in the USPTO on 12 June 2003. No petition fee is required.

On 12 June 2003, applicant filed a transmittal letter, executed declaration, assignment and information disclosure sheet in U.S. application 10/415,403. Thereafter, on 14 August 2003, a Notification of Missing Requirements was mailed to applicant indicating that an oath or declaration in compliance with 37 CFR 1.497(a) & (b) was required. On 25 August 2003, applicant filed a Response to the Notification of Missing Requirements, indicating that a declaration was filed on 12 June 2003 along with a post card receipt. However, applicant did not include a copy of the originally filed declaration. A communication mailed to applicant on 06 November 2003 advised applicant to file a petition under 37 CFR 1.181 along with true copies of the papers submitted on 12 June 2003.

On 18 November 2003, applicant filed the instant petition, requesting acceptance of a copy of the declaration as filed 12 June 2003, accompanied by a copy of the itemized postcard receipt with USPTO date-stamp 12 June 2003, indicating receipt of, *inter alia*, the declaration of the inventor.

DISCUSSION

A review of the USPTO date-stamped, itemized postcard receipt indicates that the declaration and power of attorney, among other documents, were deposited with the USPTO on 12 June 2003.

The evidence submitted is sufficient to establish that this application was received in the USPTO on 12 June 2003. Accordingly, it is appropriate to accept the copy of the application as a replacement for the missing original declaration with a deposit date of 12 June 2003.

A review of the declaration reveals that the declaration identifies each inventor, and states the residency, citizenship and mailing address of each inventor. Thus, the declaration is acceptable and the requirements of 37 CFR 1.497 are met.

CONCLUSION

The petition under 37 CFR 1.181 to accept the declaration filed on 12 June 2003 is **GRANTED**.

The copy of the declaration originally submitted on 12 June 2003 and resubmitted on 18 November 2003 is acceptable and meets the requirements of 37 CFR 1.497.

The application will be forwarded to the United States Designated/Elected Office (DO/EO/US) for further processing. The 35 U.S.C. 371 date is **12 June 2003.**

Cynthia M. Kratz

/Cynthia M. Kratz
Attorney Advisor
PCT Legal Office

Telephone: (703) 306-5467

UNITED STATES PATENT AND TRADEMARK OFFICE

Commissioner for Patents
United States Patent and Trademark Office
P.O. Box 1450
Alexandria, VA 22313-1450
www.uspto.gov

CIBA SPECIALTY CHEMICALS CORPORATION
PATENT DEPARTMENT
540 WHITE PLAINS RD
P O BOX 2005
TARRYTOWN NY 10591-9005

COPY MAILED

OCT 0 6 2004

OFFICE OF PETITIONS

ON PETITION

In re Application of :
Lain Frank Fraser et al. :
Application No. 10/415,404 :
Filed: April 29, 2003 :
Attorney Docket No.: 11/2-22274/MA
2199/PCT

This decision is in response to the petition under 37 CFR 1.137(a)[1] to revive the above identified application.

The petition under 37 CFR 1.137(a) is **DISMISSED**.

Any request for reconsideration of this decision must be submitted within TWO (2) MONTHS from the mail date of this decision. Extensions of time under 37 CFR 1.136(a) are permitted. The reconsideration request should include a cover letter entitled "Renewed Petition under 37 CFR 1.137(a)" or "Renewed Petition under 37 CFR 1.137(b)." This is not a final agency decision.

A non-Final Office Action was mailed February 13, 2004. No response having been filed, this application became abandoned May 14, 2004. Accordingly, a Notice of Abandonment was mailed August 31, 2004.

Petitioner argues that a timely response was filed to the non-Final Office Action on May 12, 2004. In support of the argument, petitioner supplies a copy of the response which included an amendment.

The cover letter used to file the amendment and the substitute drawings did however

---

[1]A grantable petition under 37 CFR 1.137(a) must be accompanied by:

(1) the required reply, unless previously filed; In a nonprovisional application abandoned for failure to prosecute, the required reply may be met by the filing of a continuing application. In a nonprovisional utility or plant application filed on or after June 8, 1995, and abandoned for failure to prosecute, the required reply may also be met by the filing of a request for continued examination in compliance with § 1.114. In an application or patent, abandoned or lapsed for failure to pay the issue fee or any portion thereof, the required reply must be the payment of the issue fee or any outstanding balance thereof.

(2) the petition fee as set forth in 37 CFR 1.17(l);

(3) a showing to the satisfaction of the Commissioner that the entire delay in filing the required reply from the due date for the reply until the filing of a grantable petition pursuant to 37 CFR 1.137(a) was unavoidable; and

(4) any terminal disclaimer (and fee as set forth in 37 CFR 1.20(d)) required pursuant to 37 CFR 1.137(c)).

include a certificate of mail pursuant to 37 CFR 1.8, which is proof that the documents provided were in fact mailed on May 12, 2004.

However, a key requirement of 37 CFR 1.137(a) is a statement concerning the entire delay. The statement contained in the instant petition does not set forth that the entire delay from the due date of the required reply to the date of the filing of a grantable petition was unintentional. Thus the petition lacks item 3 of the requirement and the application cannot be revived unless and until such a statement regarding the delay has been submitted.

Further correspondence with respect to this matter should be addressed as follows:

By mail: Mail Stop Petitions
Commissioner for Patents
P.O. Box 1450
Alexandria VA 22313-1450

By FAX: (703) 872-9306
Attn: Office of Petitions

Telephone inquiries concerning this matter may be directed to the undersigned Petitions Attorney at (571) 272-3212.

Patricia Faison-Ball

Patricia Faison-Ball
Senior Petitions Attorney
Office of Petitions

UNITED STATES PATENT AND TRADEMARK OFFICE

Commissioner for Patents
United States Patent and Trademark Office
P.O. Box 1450
Alexandria, VA 22313-1450
www.uspto.gov

CIBA SPECIALTY CHEMICALS CORPORATION
PATENT DEPARTMENT
540 WHITE PLAINS RD
P O BOX 2005
TARRYTOWN NY 10591-9005

COPY MAILED

DEC 17 2004

OFFICE OF PETITIONS

ON PETITION

In re Application of :
Lain Frank Fraser et al. :
Application No. 10/415,404 :
Filed: April 29, 2003 :
Attorney Docket No.: 11/2-22274/MA 2199/PCT

This decision is in response to the renewed petition filed November 1, 2004, under 37 CFR 1.137(a)[1], to revive the above identified application.

The petition is GRANTED.

The application became abandoned on May 14, 2004 for failure to file a timely response to a non-Final Office Action mailed February 13, 2004. No response having been filed, this application became abandoned. Accordingly, a Notice of Abandonment was mailed August 31, 2004. In response thereof, petitioner filed a petition to revive on September 20, 2004, which was dismissed in a decision mailed October 7, 2004 because while proof in the form of a copy of the timely filed amendment mailed May 12, 2004 and a certificate of mailing pursuant to 37 CFR 1.8 was submitted on petition, the entire delay statement was not provided.

The instant petition provides the entire delay statement. The requirements under 37 CFR 1.137(a) having now been satisfied, this application is revived and is being forwarded to Technology Center 1755 for further examination.

Telephone inquiries concerning this matter may be directed to the undersigned Petitions Attorney at (571) 272-3212.

Patricia Faison-Ball
Senior Petitions Attorney
Office of Petitions

---

[1]A grantable petition under 37 CFR 1.137(a) must be accompanied by:

(1) the required reply, unless previously filed; In a nonprovisional application abandoned for failure to prosecute, the required reply may be met by the filing of a continuing application. In a nonprovisional utility or plant application filed on or after June 8, 1995, and abandoned for failure to prosecute, the required reply may also be met by the filing of a request for continued examination in compliance with § 1.114. In an application or patent, abandoned or lapsed for failure to pay the issue fee or any portion thereof, the required reply must be the payment of the issue fee or any outstanding balance thereof.

(2) the petition fee as set forth in 37 CFR 1.17(l);

(3) a showing to the satisfaction of the Commissioner that the entire delay in filing the required reply from the due date for the reply until the filing of a grantable petition pursuant to 37 CFR 1.137(a) was unavoidable; and

(4) any terminal disclaimer (and fee as set forth in 37 CFR 1.20(d)) required pursuant to 37 CFR 1.137(c)).

10 MAR 2004

UNITED STATES PATENT AND TRADEMARK OFFICE

COMMISSIONER FOR PATENTS
UNITED STATES PATENT AND TRADEMARK OFFICE
P.O. BOX 1450
ALEXANDRIA, VA 22313-1450
www.uspto.gov

Schwegman Lundberg Woessner & Kluth PA
PO Box 2938
Minneapolis, MN 55402

In re Application of RUTZKE, Corine Johnson Application No.: 10/415,430 PCT No.: PCT/US01/31254 Int. Filing Date: 05 October 2001 Priority Date: 27 October 2000 Attorney's Docket No.: 1153.024US1 For: ALTERATION OF PLANT NITRATE AND OXALIC ACID CONCENTRATION	DECISION ON PETITION UNDER 37 CFR 1.182

This decision responds to "Communication RE: Missing Parts," filed with the United States Patent and Trademark Office on 03 November 2003. The submission contains an indication that Inventor Johnson's name changed subsequent to a marriage. The submission has been construed as a petition under 37 CFR 1.182 to change applicant's name. The petition fee will be charged to deposit account no. 19-0743, as authorized.

BACKGROUND

On 05 October 2001, applicant filed international application PCT/US01/31254. On 23 May 2002, applicant filed a demand for international preliminary examination which elected the United States, prior to nineteen months from the priority date. The deadline for entry into the national stage in the United States was midnight 28 April 2003 (27 April 2003 was a Sunday).

On 28 April 2003, applicant filed a submission for entry into the national stage in the United States which was accompanied by, *inter alia*, the U.S. Basic National Fee.

On 30 July 2003, the Office mailed Notification of Missing Requirements (Form PCT/DO/EO/905) indicating, *inter alia*, that an oath or declaration in compliance with 37 CFR 1.497(a)-(b) was required.

On 03 November 2003, applicant responded to the Notification of Missing Requirements with a declaration executed by Corinne Johnson Rutzke accompanied by an Affidavit, License and Certificate of Marriage and the fee for a one month extension of time. The certificate of mailing indicated the letter was deposited on 30 October 2003.

DISCUSSION

The marriage certificate indicates that Ms. Johnson's surname changed to Rutzke on 22 September 2001 upon her marriage. This satisfies the requirements of the petition under 37 CFR 1.182.

CONCLUSION

For the above reasons, the Petition Under 37 CFR 1.182 is **GRANTED**.

This application is being forwarded to the National Stage Processing Branch of the Office of PCT Operations for further processing in accordance with this decision, including the mailing of a Notification Of Acceptance (Form PCT/DO/EO/903) and filing receipt. The date under date under 35 U.S.C. §§371(c)(1), (c)(2) and (c)(4) date is 03 November 2003.

By authority for

Boris Milef
PCT Legal Examiner
PCT Legal Administration

Erin M. Pender
Attorney Advisor
PCT Legal Administration

Telephone: (703) 305-0455
Facsimile: (703) 308-6459

UNITED STATES PATENT AND TRADEMARK OFFICE

Commissioner for Patents
United States Patent and Trademark Office
PO Box 1450
Alexandria, VA 22313-1450

2 6 SEP 2003

D. Peter Hochberg Co., L.P.A.
1940 East 6th Street - 6th Floor
Cleveland, OH 44114

In re Application of	:	
Sun	:	
US Application No.: 10/415,444	:	
PCT Application No.: PCT/CN00/00411	:	DECISION ON
International Filing Date: 31 October 2000	:	PETITION FOR REVIVAL
Priority Date: 01 November 1999	:	UNDER 37 CFR 1.137(b)
Attorney's Docket No.: KG0689US (#90614)	:	
For: FRONT PROJECTION SCREEN	:	

The petition to revive under 37 CFR 1.137(b), filed on 29 April 2003 in the above-captioned application, is hereby **GRANTED** as follows.

On 31 October 2000, Applicant filed international application PCT/CN00/00411, which claimed priority of an earlier application filed on 01 November 1999. A copy of the international application, in Chinese, was communicated from the International Bureau to the USPTO on 10 May 2001. A demand for international preliminary examination, in which the United States was elected, was filed on 01 June 2001, the end of the 19-month period from the 01 November 1999 priority date. The period for paying the basic national fee is thus 30 months and ended at midnight on 01 May 2002.

The basic national fee was not submitted on or before 01 May 2002. The international application became abandoned as to the United States on 02 May 2002.

The instant petition is accompanied by, *inter alia*:

(1) A transmittal letter for entry into the national stage in the United States under 35 U.S.C. 371, along with the $530 basic national fee (small entity) required by 35 U.S.C. 371(c)(1) and 37 CFR 1.492(a)(3);

(2) The $650 petition fee (small entity);

(3) A statement to the effect that the entire delay in filing the basic national fee from its due date until the filing of the instant petition under 37 CFR 1.137(b) was unintentional.

Moreover, a terminal disclaimer is not applicable in the instant case.

The request to revive the application abandoned under 35 U.S.C. 371(d) is granted as to the national stage in the United States of America.

Applicant's claim for priority is acknowledged. The application has an international filing date of 31 October 2000 under 35 U.S.C. 363.

The application is being returned to the National Stage Processing Division of the Office of PCT Operations for continued processing, including mailing of a Notification of Missing Requirements under 35 U.S.C. 371, requiring an oath or declaration in compliance with 37 CFR 1.497(a)-(b).

Richard Cole
PCT Legal Examiner
PCT Legal Office

RC Tang
Petitions Attorney
PCT Legal Office
Telephone: 703-308-1315
Facsimile: 703-308-6459

UNITED STATES PATENT AND TRADEMARK OFFICE

Commissioner for Patents
United States Patent and Trademark Office
P.O. Box 1450
Alexandria, VA 22313-1450
www.uspto.gov

RONALD R. SANTUCCI
FROMMER LAWRENCE & HAUG
745 FIFTH AVENUE
NEW YORK, NY 10151

COPY MAILED

OCT 07 2004

OFFICE OF PETITIONS

In re Application of	:	
Norbert Angert et al	:	
Application No. 10/415,445	:	ON PETITION
Filed: August 20, 2003	:	
Attorney Docket No. 930008-2103	:	

This is a decision on the petition, filed September 29, 2004, and supplemented on October 5, 2004, under 37 CFR 1.313(c)(3) to withdraw the above-identified application from issue after payment of the issue fee.

The petition is **GRANTED**.

The above-identified application is withdrawn from issue for express abandonment. See 37 CFR 1.313(c)(3). The above-identified application is expressly abandoned in favor of a continuing application filed September 29, 2004.

Telephone inquiries should be directed to the undersigned at (703) 305-8859.

The application will be referred to Files Repository.

Karen Creasy
Petitions Examiner
Office of Petitions
Office of the Deputy Commissioner
for Patent Examination Policy

UNITED STATES PATENT AND TRADEMARK OFFICE

COMMISSIONER FOR PATENTS
UNITED STATES PATENT AND TRADEMARK OFFICE
P.O. BOX 1450
ALEXANDRIA, VA 22313-1450
www.uspto.gov

26 SEP 2003

Proskauer Rose, Llp
1585 Broadway
New York, NY 10036

In re Application of	:	
Pircher, et al.	:	
Application Serial No.: 10/415,451	:	
PCT No.: PCT/EP01/12201	:	DECISION ON PETITION UNDER
Intl. Filing Date: 23 October 2001	:	
Priority Date: 23 October 2000	:	37 CFR 1.137(b)
Attorney's Docket No.:	:	
For: METHOD FOR PRODUCING A MAGNESIUM	:	
HOT STRIP	:	

This decision is in response to applicants' "PETITION FOR REVIVAL OF AN UNINTENTIONALLY ABANDONED APPLICATION", filed 28 April 2003.

BACKGROUND

On 23 October 2001, applicants filed international Application PCT/EP01/12201 which claimed priority to an earlier application filed 23 October 2000. A copy of the international application was communicated to the United States Patent and Trademark Office on 10 May 2002. Accordingly, pursuant to 37 CFR 1.495, the thirty month period for paying the basic national fee expired at midnight 23 April 2003.

On 28 April 2003, applicant filed a transmittal letter for entry into the national stage in the United States, which was accompanied by, inter alia,: the requisite basic national fee as required by 35 U.S.C. 371(c)(1), a translation of the international application, and a first preliminary amendment, and the instant petition and requisite petition fee.

DISCUSSION

Under 37 CFR 1.137(b), a petition requesting that the application be revived on the grounds of unintentional delay must be filed promptly after applicant becomes aware of the abandonment and must be accompanied by: (1) the required reply, unless previously filed, (2) the petition fee required by law, (3) a statement that the entire delay in filing the required reply from the due date of the reply until the filing of a grantable petition was unintentional and (4) a terminal disclaimer (for applications filed before 8 June 1995).

As to item (1), the petition is accompanied by the required reply in the form of an authorization charge deposit account 16-2500 for the basic national filing fee.

As to item (2), the petition was also charged to deposit account 16-2500 as authorized.

As to item (3), the petition is accompanied by applicants' statement that 'the entire delay in filing the required reply from the due date of the reply until the filing of a grantable petition was unintentional."

As to item (4), a terminal disclaimer is not required in the present case.

CONCLUSION

The petition under 37 CFR 1.137 (b) to revive the international application abandoned under 35 USC 371(d) is **granted** as to the national stage in the United States of America.

Deposit account 16-2500 will be charged $130.00 for the filing of the English translation of the international application after twenty or thirty months from the priority date.

This application is being forwarded to the National Stage Processing Branch of the International Division to continue national stage processing of the present application, including preparation and mailing of the Notification of Missing Requirement Under 35 USC 371 requiring an oath or declaration as required by 35 USC 371(c)(4) and the surcharge for filing the oath or declaration later than thirty months from the priority date as required by 37 CFR 1.492(e).

Leonard Smith
PCT Legal Examiner
PCT Legal Office
Telephone: (703) 305-0010
Facsimile: (703) 308-6459

Kenya A. McLaughlin
PCT Legal Office Detailee
PCT Legal Office

18 FEB 2004

#9

UNITED STATES PATENT AND TRADEMARK OFFICE

COMMISSIONER FOR PATENTS
UNITED STATES PATENT AND TRADEMARK OFFICE
P.O. BOX 1450
ALEXANDRIA, VA 22313-1450
www.uspto.gov

Jeffrey M. Greenman
BAYER PHARMACEUTICALS CORPORATION
400 Morgan Lane
West Haven, CT 06516

In re Application of :
BOSS, Frank-Gerhard *et al* :
Application No.: 10/415,455 :
PCT No.: PCT/EP01/12098 :
Int. Filing Date: 19 October 2001 :
Priority Date: 30 October 2000 : **DECISION**
Attorney Docket No.: Le A 34 968 :
For: SULPHONAMIDES FOR THE :
TREATMENT OF THE CENTRAL :
NERVOUS SYSTEM DISEASES :

This decision is in response to applicants' "Response to Notification of Defective Response" filed on 29 December 2003 which is treated as a petition under 37 CFR 1.181. No fee is required.

BACKGROUND

On 14 August 2003, the United States Designated/Elected Office (DO/EO/US) mailed a Notification of Missing Requirements under 35 U.S.C. 371 (Form PCT/DO/EO/905) indicating that a declaration in compliance with 37 CFR 1.497(a) and (b), a $130.00 surcharge fee must be provided. A two-month time period for response was set with extensions of time available under 37 CFR 1.136(a).

On 01 October 2003, applicants filed a response which included an executed declaration and authorization to charge the surcharge fee to Deposit Account No. 13-3372.

On 25 November 2003, a Notification of a Defective Response (Form PCT/DO/EO/916) was mailed by the DO/EO/US informing applicants that the declaration filed 01 October 2003 was not in compliance with 37 CFR 1.497(a) and (b). One of the inventors' names was listed differently on the declaration than the international application. The declaration listed the name of the applicant and inventor as Stephan-Nicholas Wirtz, while the international publication recorded the name as Stephan-Nicholas Müller.

On 29 December 2003, applicants filed the instant response stating that a request for a name change of the inventor had already been submitted to the IB on 31 March 2003. Applicants claim that the Notification of the Recording of a Change (Form PCT/IB/306) had not yet been received from the IB.

DISCUSSION

There was no indication in the file that a Notification of the Recording of a Change (Form PCT/IB/306) had been received from the IB. But a check with the IB reveals that the request of change of the name of one of the applicant/inventors to Stephan-Nicholas Wirtz was received and a Notification of the Recording of a Change (Form PCT/IB/306) signifying official recognition of the name change was mailed on 20 May 2003. A copy of this form was sent by the IB via facsimile and placed in the file.

This is sufficient to explain the discrepancy on the declaration.

DECISION

Applicants' petition under 37 CFR 1.181 is **GRANTED**.

The Notification of a Defective Response (Form PCT/DO/EO/916) mailed 25 November 2003 is hereby **VACATED**.

The declaration filed 01 October 2003 is in compliance with 37 CFR 1.497(a) and (b).

Applicants have completed the requirements for acceptance under 35 U.S.C. 371(c). The application has an international filing date of 19 October 2001, under 35 U.S.C. 363, and a 35 U.S.C. 371 date of 01 October 2003.

This application is being forwarded to the National Stage Processing Division of the Office of PCT Operations for continued processing.

James Thomson
Attorney Advisor
Office of PCT Legal Administration

Tel.: (703) 308-6457

10 DEC 2003

#7

UNITED STATES PATENT AND TRADEMARK OFFICE

COMMISSIONER FOR PATENTS
UNITED STATES PATENT AND TRADEMARK OFFICE
P.O. BOX 1450
ALEXANDRIA, VA 22313-1450
www.uspto.gov

John Campa
NIXON PEABODY
P.O. Box 31051
Clinton Square
Rochester, NY 14603-1051

In re Application of	:	
CLARK, Harry Kennedy *et al*	:	
U.S. Application No.: 10/415,465	:	
PCT No.: PCT/US01/43056	:	**DECISION ON**
Int. Filing Date: 13 November 2001	:	**RENEWED PETITION**
Priority Date: 13 November 2000	:	**UNDER 37 CFR 1.47(a)**
Attorney Docket No.: 201969/172	:	
For: METHOD AND ASSESSMENT OF	:	
USER PERFORMANCE	:	

This is a decision on applicants' renewed petition under 37 CFR 1.47(a) ("Ren.Pet.") filed on 19 November 2003.

BACKGROUND

On 28 August 2003, a decision dismissing applicants' petition under 37 CFR 1.47(a) was mailed because applicants failed to satisfy item (2) of 37 CFR 1.47(a) for two joint inventors, Mr. Clark and Mr. Meesuk. Applicants were given two months to respond.

On 19 November 2003, applicants filed the instant renewed petition which was accompanied by, *inter alia*, Exhibits ("Exh.") A - E.

DISCUSSION

In the original petition, applicants did not satisfying item (2) of 37 CFR 1.47(a) by demonstrating that either of the two nonsigning joint inventors' conduct constituted a refusal.

Concerning Mr. Harry Kennedy Clark, the requirements were not satisfied because the evidence presented suggested that he was requesting clarification of his legal obligations from the 37 CFR 1.47(a) applicants and seeking the advice of counsel.

In the renewed petition, the 37 CFR 1.47(a) applicants declare that "a complete copy of the filed application papers" were submitted to Mr. Clark's counsel, Jennifer L. Bowman on 29 October 2003. Ren.Pet. at ¶ 2. Ms. Bowman responded with a letter dated 10 November 2003 on Mr. Clark's behalf stating that "at this time, Mr. Clark is not inclined to execute the Declaration." Exh. C at ¶ 2. Ms. Bowman offered a settlement

proposal to the 37 CFR 1.47(a) applicants in the 10 November 2003 response. A copy of both the on 29 October 2003 cover letter sent to Ms. Bowman and her 10 November 2003 response above were submitted with the instant petition as required. The 37 CFR 1.47(a) applicants maintain that "sufficient proof has been presented showing that non-signing inventor Harry Kennedy Clark has expressly refused to sign the Combined Declaration and Power of Attorney, and that this conduct also constitutes a refusal." Ren.Pet. at ¶ 5.

A review of the 10 November 2003 response from Ms. Bowman submitted as Exhibit C confirms that this letter was properly deemed an express written refusal as discussed in section 409.03(d) of the MPEP. As such, the 37 CFR 1.47(a) applicants have demonstrated a refusal to join in the above-captioned application by Mr. Clark and have now satisfied item (2) of 37 CFR 1.47(a) with regards to him.

Concerning Mr. Kasempath Meesuk, the requirements were not satisfied because the evidence presented was considered not to constitute an oral refusal. Further clarification of Mr. Meesuk's position was requested.

In the renewed petition, the 37 CFR 1.47(a) applicants state that they mailed "another complete copy of the filed application papers" to Mr. Meesuk on 29 October 2003. Id. at ¶ 6. A copy of the FedEx delivery documents and the cover letter were submitted as Exhibits D - E. The 37 CFR 1.47(a) applicants also declare that they contacted Mr. Meesuk via telephone on 14 July 2003, but that "Mr. Meesuk offered no more specific information with regard to his position as to whether he is refusing to sign the Combined Declaration and Power of Attorney other than what was submitted by the undersigned in the June 25th Petition." Id. at ¶ 7.

The 37 CFR 1.47(a) applicants also argue that the 29 October 2003 cover letter gave Mr. Meesuk until 07 November 2003 to respond, but "[a]s of the mailing date of this Request For Reconsideration, the undersigned submits that he has not received a signed Combined Declaration and Power of Attorney nor any further correspondence from Mr. Meesuk. Id. at ¶ 8. The 37 CFR 1.47(a) applicants maintain that "Kasempath Meesuk's conduct constitutes a refusal to sign the Combined Declaration and Power of Attorney." Id.

A review of the evidence presented shows that the date to respond on the 29 October 2003 correspondence was 12 November 2003, not 07 November 2003 as stated in the petition. Nevertheless, the 37 CFR 1.47(a) applicants have shown that by not reponding in a timely fashion to the 29 October 2003 correspondence, the conduct of Mr. Meesuk constitutes a refusal to join as discussed in section 409.03(d) of the MPEP. Thus, item (2) of 37 CFR 1.47(a) is now satisfied for both Mr. Clark and Mr. Meesuk.

All the requirements of 37 CFR 1.47(a) are now complete.

CONCLUSION

Applicants' renewed petition under 37 CFR 1.47(a) is **GRANTED**.

Applicants have completed the requirements for acceptance under 35 U.S.C. 371(c). The application has an international filing date of 13 November 2001 under 35 U.S.C. 363, and a 35 U.S.C. 371 date of 27 August 2003.

As provided in 37 CFR 1.47(a), a notice of the filing of this application will be forwarded to the non-signing inventors at their last known address of record and will be published in the Official Gazette.

This application is being forwarded to the National Stage Processing Division of the Office of PCT Operations for continued processing.

James Thomson
Attorney Advisor
Office of PCT Legal Administration

Tel.: (703) 308-6457

10 DEC 2003

UNITED STATES PATENT AND TRADEMARK OFFICE

COMMISSIONER FOR PATENTS
UNITED STATES PATENT AND TRADEMARK OFFICE
P.O. BOX 1450
ALEXANDRIA, VA 22313-1450
www.uspto.gov

Mr. Kasempath Meesuk
17 Brown Shady Drive
Glen Burnie, MD 21061

In re Application of
CLARK, Harry Kennedy *et al*
U.S. Application No.: 10/415,465
PCT No.: PCT/US01/43056
Int. Filing Date: 13 November 2001
Priority Date: 13 November 2000
Attorney Docket No.: 201969/172
For: METHOD AND ASSESSMENT OF USER PERFORMANCE

Mr. Meesuk:

You are named as an inventor in the above identified United States patent application, filed under the provisions of 37 CFR 1.47(a) and 35 U.S.C. § 116. Should a patent be granted, you will be designated as an inventor.

As a named inventor, you are entitled to inspect any paper in the file wrapper of the application, order copies of all or any part thereof (at a prepaid cost per 37 CFR 1.19) or to make your position of record in the application. Alternatively, you may arrange to do any of the preceding through a registered patent agent or attorney presenting written authorization from you. If you care to join in the application, counsel of record (see below) would presumably assist you. Joining in the application would entail the filing of an appropriate oath or declaration by you pursuant to 37 CFR 1.63.

James Thomson
Attorney Advisor
Office of PCT Legal Administration

Tel.: (703) 308-6457

John Campa
NIXON PEABODY
P.O. Box 31051
Clinton Square
Rochester, NY 14603-1051

10 DEC 2003

UNITED STATES PATENT AND TRADEMARK OFFICE

COMMISSIONER FOR PATENTS
UNITED STATES PATENT AND TRADEMARK OFFICE
P.O. BOX 1450
ALEXANDRIA, VA 22313-1450
www.uspto.gov

Mr. Harry Kennedy Clark
1608 Montmorency Drive
Vienna, VA 22182

In re Application of
CLARK, Harry Kennedy *et al*
U.S. Application No.: 10/415,465
PCT No.: PCT/US01/43056
Int. Filing Date: 13 November 2001
Priority Date: 13 November 2000
Attorney Docket No.: 201969/172
For: METHOD AND ASSESSMENT OF USER PERFORMANCE

Mr. Clark:

You are named as an inventor in the above identified United States patent application, filed under the provisions of 37 CFR 1.47(a) and 35 U.S.C. § 116. Should a patent be granted, you will be designated as an inventor.

As a named inventor, you are entitled to inspect any paper in the file wrapper of the application, order copies of all or any part thereof (at a prepaid cost per 37 CFR 1.19) or to make your position of record in the application. Alternatively, you may arrange to do any of the preceding through a registered patent agent or attorney presenting written authorization from you. If you care to join in the application, counsel of record (see below) would presumably assist you. Joining in the application would entail the filing of an appropriate oath or declaration by you pursuant to 37 CFR 1.63.

James Thomson
Attorney Advisor
Office of PCT Legal Administration

Tel.: (703) 308-6457

John Campa
NIXON PEABODY
P.O. Box 31051
Clinton Square
Rochester, NY 14603-1051

20 AUG 2004
UNITED STATES PATENT AND TRADEMARK OFFICE

COMMISSIONER FOR PATENT
UNITED STATES PATENT AND TRADEMARK OFFIC
ALEXANDRIA, VA 22313-1450
www.uspto.go

Blakely, Sokoloff, Taylor & Zafman, LLP
12400 Wilshire Blvd., Seventh Floor
Los Angeles, CA 90025-1026

In re Application of:	:	
McGovern et al..	:	
Application No.: 10/415,466	:	DECISION
PCT No.: PCT/GB01/04772	:	
Int. Filing Date: 26 October 2001	:	UNDER
Priority Date: 26 October 2000	:	
Atty. Docket No.: 6622P001	:	37 CFR 1.47
For: Software Development	:	

This is in response to the renewed petition under 37 CFR 1.47(a) filed on 29 December 2003.

DISCUSSION

A petition under 37 CFR 1.47(a) must be accompanied by (1) the fee under 37 CFR 1.17(h), (2) factual proof that the missing joint inventor refuses to execute the application or cannot be reached after diligent effort, (3) a statement of the last known address of the missing inventor, and (4) an oath or declaration by each 37 CFR 1.47(a) applicant on his or her own behalf and on behalf of the non-signing joint inventor. In a decision mailed on 26 September 2003, petitioner was advised that the petition filed on 28 August 2003 had satisfied requirements (1) and (3), but not (2) and (4).

Regarding requirement (2), petitioner has provided a declaration signed by formerly non-signing joint inventor Garrett Conaty. Petitioner has also demonstrated that non-signing joint inventor Philip Head refused to sign an oath or declaration after receiving the oath or declaration and a copy of the application (as described in the "Declaration Under 35 U.S.C. § 1.16" accompanying the instant petition). Meanwhile, the "Declaration Under 35 U.S.C. § 1.16" signed by Adrian James Samuels states that a copy of the application and a declaration form were mailed to Mr. Hogan, but that "I have not received a reply from my letter to Mr. Hogan nor have I received any contact from him." However, it is not clear whether petitioner is relying on these facts to establish that Mr. Hogan refuses to sign, or that he could not be found or reached after diligent effort. Mr. Samuels' declaration suggests that there is a doubt as to Mr. Hogan's whereabouts, as reflected in the statement that "I asked Mr. Head if he was aware of how I could contact Mr. Hogan." Also, the chart on the second page of the petition indicates that Mr. Hogan "cannot be located." If petitioner is attempting to demonstrate that Mr. Hogan cannot be found or reached after diligent effort, a showing as to what diligent efforts were undertaken to locate him must be provided. In this regard, petitioner does not even explicitly state whether or not

delivery confirmation of the letter to Mr. Hogan was obtained, or whether it was returned to sender. Therefore, it would not be appropriate to conclude that requirement (2) has been satisfied at this time.

Regarding requirement (4), petitioner has submitted declarations newly executed by Martin Chapman and by Garrett Conaty. Petitioner had filed previously (on 28 August 2003) a complete declaration executed by Fergal McGovern. Consequently, requirement (4) has been satisfied.

CONCLUSION

The petition is **DISMISSED**, without prejudice.

If reconsideration on the merits of this petition is desired, a proper response must be filed within **TWO (2) MONTHS** from the mail date of this decision. Any reconsideration request should include a cover letter entitled "Renewed Petition Under 37 CFR 1.47." No additional petition fee is required. Extensions of time may be obtained under 37 CFR 1.136(a).

Please direct any further correspondence with respect to this matter to the Assistant Commissioner for Patents, Mail Stop PCT, Alexandria, VA 22313-1450, and address the contents of the letter to the attention of the PCT Legal Office.

Leonard Smith
PCT Legal Examiner
PCT Legal Office

George M. Dombroske
PCT Legal Examiner
PCT Legal Office
Tel: (703) 308-6721
Fax: (703) 308-6459

UNITED STATES PATENT AND TRADEMARK OFFICE

COMMISSIONER FOR PATENTS
UNITED STATES PATENT AND TRADEMARK OFFICE
P.O. BOX 1450
ALEXANDRIA, VA 22313-1450
www.uspto.gov

#6

26 SEP 2003

Blakely, Sokoloff, Taylor & Zafman LLP
12400 Wilshire Blvd., Seventh Floor
Los Angeles, CA 90025-1026

In re Application of	:	
McGovern, Chapman, Conaty, Head, and Hogan	:	
Application No. 10/415,466	:	
PCT No.: PCT/GB01/04772	:	DECISION ON PETITION
International Filing Date: 26 October 2001	:	UNDER 37 CFR 1.47(a)
Priority Date: 26 October 2000	:	
Attorney Docket No.: 6622P001	:	
For: SOFTWARE DEVELOPMENT	:	

This is a decision on the applicant's petition under 37 CFR 1.47(a) filed 28 August 2003, to accept the application without the signature of joint inventors Conaty, Head, and Hogan.

BACKGROUND

On 26 October 2000, applicant filed international application PCT/GB01/04772 which claimed a priority date of 26 October 2000 and designated the United States. The thirty-month period for paying the basic national fee in the United States was midnight, 26 April 2003.

On 28 April 2003, applicant filed a transmittal letter for entry into the national stage in the United States, which was accompanied by the requisite basic national fee as required by 35 USC 371(c)(1).

On 26 June 2003, the United States Designated/Elected Office mailed Notification of Missing Requirements under 35 USC 371 indicating that an oath or declaration in compliance with 37 CFR 1.497(a) and (b) must be filed along with the surcharge for the later filing of the oath or declaration, among other items. The notification set a two-month time limit in which to respond.

On 28 August 2003 (certificate of mailing dated 25 August 2003), applicant filed the instant petition under 37 CFR 1.47(a). The petition was accompanied by an oath or declaration signed by only inventors McGovern and Chapman, a statement of inventor McGovern, and other documentary evidence.

DISCUSSION

A petition under 37 CFR 1.47(a) must be accompanied by (1) the fee under 37 CFR 1.17(h), (2) factual proof that the missing joint inventor refuses to execute the application or cannot be reached after diligent effort, (3) a statement of the last known address of the missing inventor, and (4) an oath or declaration signed by each 37 CFR 1.47(a) applicant on his behalf and on behalf of the non-signing inventor.

As to Item (1), the petition fee of $130.00 will be charged to deposit account 02-2666. 2003.

As to Item (3), a the petition states the last known address of the non-signing inventors.

Accordingly, Items (1) and (3) have been satisfied.

As to item (2), applicant has not properly established that the nonsigning inventors are unavailable to join the application or refuse to do so. The statement of inventor McGovern indicates that a diligent effort was made to locate the nonsigning inventors, attempts were made to confirm the postal and e-mail addresses for the non-signing inventors, and that a letter was sent to the last known addresses of the nonsigning inventors requesting that they execute the oath or declaration. The statement of inventor McGovern is inadequate for evidentiary purposes of the 37 CFR 1.47(a) petition. Section 409.03(d) of the *Manual of Patent Examining Procedure(MPEP)* provides, in pertinent part, that: "[w]here inability to find or reach a nonsigning inventor is the reason for filing under 37 CFR 1.47, a statement of facts should be submitted that fully describes the exact facts which are relied on to establish that a diligent effort was made." This section of the MPEP furthers states that:

> The statement of facts must be signed, where at all possible, by a person having firsthand knowledge of the facts recited therein, Statements based on hearsay will not normally be accepted. Copies of documentary evidence such as Internet searches, certified mail, return receipts, cover letters or instructions, telegrams, that support a finding that the nonsigning inventor could not be found or reached should be made a part of the statement. The steps taken to locate the whereabouts of the nonsigning inventor should be included in the statements of facts. It is important that the statement contain facts as opposed to conclusions.

The statement of inventor McGovern only states that diligent efforts to locate the non-signing inventors were made, without specifically stating what those efforts were. Further, inventor McGovern's statements recounts efforts to locate the nonsigning inventors undertaken by another person, namely John Beresford. This is hearsay and unacceptable as evidence for a petition under 37 CFR 1.47.

Applicant also indicates that the nonsigning inventors may be refusing to join the application, but applicant has not provided sufficient evidence to support the conclusion that the nonsigning inventors are refusing to join the application. Section 409.03(d) of the MPEP states, in pertinent part, that:

> [a] refusal by an inventor to sign an oath or declaration when the inventor has not been presented with the application papers does not itself suggest that the inventor is refusing to join the application unless it is clear that the inventor understands exactly what he or she is being asked to sign and refuses to accept the application papers. A copy of the application papers should be sent to the last known address of the non-signing inventor . . .
>
> Where a refusal of the inventor to sign the application papers is alleged, the circumstances of the presentation of the application papers and of the refusal must be specified in a statement of facts by person who presented the inventor with the application papers and/or to whom the refusal was made.

The petition indicates that the oath or declaration was sent to the non-signing inventors, but does not indicate that a complete copy of the application papers was included. Before a refusal to join the application will be assumed, applicant must establish that a complete copy of the application papers was presented to the nonsigning inventors. Further, applicant must recount the exact details of an express refusal by the nonsigning inventors to join the application, or describe the conduct of the nonsigning inventors that would support the conclusion that the nonsigning inventors have refused constructively to join the application.

As to item (4), the declaration filed is defective in that it is a compilation of several declarations rather than one complete declaration signed by all named inventors, or complete declarations for each named inventor with all signature pages attached. The defect in the declaration is evidenced by the presence of two pages labeled "3" . Applicant must file a proper declaration with any renewed petition filed.

For the reasons stated above, it would not be appropriate to accept the application without the signatures of inventors Conaty, Head, and Hogan under 37 CFR 1.47(a) at this time

CONCLUSION

Applicant's petition under 37 CFR 1.47(a) is **DISMISSED, without prejudice**.

Applicant's are hereby afforded TWO (2) MONTHS from the mailed date of this decision to file wither 1) an oath or declaration in compliance with 37 CFR 1.497(a)-(b) signed by all inventors or (2) a renewed petition satisfying the requirements under 37 CFR 1.47(a). Any reconsideration request should include a cover letter titled, "Renewed Petition Under 37 CFR 1.47(a)." No additional petition fee is required.

Any further correspondence with respect to this matter should be directed to the Mail Stop PCT, Commissioner for Patents, PO Box 1450, Alexandria, Virginia, 22313-1450.

Boris Milef
PCT Legal Examiner
Office of PCT Legal Administration

Kenya A. McLaughlin
PCT Detailee
Office of PCT Legal Administration

Telephone (703)305-0010
Facsimile (703) 308-6459

17 DEC 2004

#10

UNITED STATES PATENT AND TRADEMARK OFFICE

COMMISSIONER FOR PATENT
UNITED STATES PATENT AND TRADEMARK OFFIC
P.O. BOX 1450
ALEXANDRIA, VA 22313-1450
www.uspto.go

Blakely, Sokoloff, Taylor & Zafman, LLP
12400 Wilshire Blvd., Seventh Floor
Los Angeles, CA 90025-1026

In re Application of:	:	
McGovern et al..	:	
Application No.: 10/415,466	:	DECISION
PCT No.: PCT/GB01/04772	:	
Int. Filing Date: 26 October 2001	:	UNDER
Priority Date: 26 October 2000	:	
Atty. Docket No.: 6622P001	:	37 CFR 1.47
For: Software Development	:	

This is in response to the renewed petition under 37 CFR 1.47(a) filed on 26 October 2004.

DISCUSSION

A petition under 37 CFR 1.47(a) must be accompanied by (1) the fee under 37 CFR 1.17(h), (2) factual proof that the missing joint inventor refuses to execute the application or cannot be reached after diligent effort, (3) a statement of the last known address of the missing inventor, and (4) an oath or declaration by each 37 CFR 1.47(a) applicant on his or her own behalf and on behalf of the non-signing joint inventor. In a decision mailed on 20 August 2004, petitioner was advised that the petition filed on 28 August 2003 had satisfied requirements (1), (3) and (4), but not requirement (2). Regarding requirement (2), petitioner has provided a declaration signed by formerly non-signing joint inventor Michael Hogan. As discussed in the previous decision, petitioner has also demonstrated that non-signing joint inventor Philip Head refused to sign an oath or declaration after receiving the oath or declaration and a copy of the application. Therefore, requirement (2) has now been satisfied. As such, it would now be appropriate to grant the requested relief.

CONCLUSION

The petition is **GRANTED**.

The Application Division and the International Division are authorized to accept the application as a 37 CFR 1.47(a) application and to mail a filing receipt. The application will be given an international filing date of 26 October 2001 under 35 U.S.C. 363. The date of this application under 35 U.S.C. 371(c)(1), (2) and (4) is **26 October 2004**.

As provided in 37 CFR 1.47(a), a notice of the filing of this application will be forwarded to the non-signing inventor at his last known address of record.

A notice of the filing of the application under 37 CFR 1.47(a) will be published in the Official Gazette.

The application is being returned to the National Stage Processing Branch for processing as the U.S. National Stage of the above-identified international application.

Richard Cole
PCT Legal Examiner
PCT Legal Office

George M. Dombroske
PCT Legal Examiner
PCT Legal Office
Tel: (571) 272-3283
Fax: (571) 273-0459

17 DEC 2004

UNITED STATES PATENT AND TRADEMARK OFFICE

COMMISSIONER FOR PATENT
UNITED STATES PATENT AND TRADEMARK OFFIC
WASHINGTON, D.C. 20231
www.uspto.go

Philip Head
Hedgerow Cottage
Ashbrook Walk
Lytchett Manor
Dorset BH16 6HZ
GREAT BRITAIN

In re Application of
McGovern et al.
Application No. 10/415,466
PCT No.: PCT/GB01/04772
Int. Filing Date: 26 October 2001
Priority Date: 26 October 2000
For: Software Development

Dear Mr. Head:

You are named as a joint inventor in the above identified United States patent application, filed under the provisions of 35 U.S.C. 116 (United States Code), and 37 CFR 1.47(a), Rules of Practice in Patent Cases. Should a patent be granted on the application you will be designated therein as a joint inventor.

As a named inventor you are entitled to inspect any paper in the file wrapper of the application, order copies of all or any part thereof (at a prepaid cost per 37 CFR 1.19) or make your position of record in the application. Alternatively, you may arrange to do any of the preceding through a registered patent attorney or agent presenting written authorization from you. If you care to join the application, counsel of record (see below) would presumably assist you. Joining in the application would entail the filing of an appropriate oath or declaration by you pursuant to 37 CFR 1.63.

Telephone inquiries regarding this communication should be directed to the undersigned at (703) 308-6721. Requests for information regarding your application should be directed to the File Information Unit at (703) 308-2733. Requests for information regarding how to pay for and order a copy of the application, or a specific paper in the application, should be directed to Certification Division at (703) 308-9726 or 1(800) 972-6382 (outside the Washington D.C. area).

Any further correspondence with respect to this matter should be addressed to the Assistant Commissioner for Patents, Mail Stop PCT, Alexandria, VA 22313-1450, with the contents of the letter marked to the attention of the PCT Legal Office.

FOR

Leonard Smith
PCT Legal Examiner
PCT Legal Office

George M. Dombroske
PCT Legal Examiner
PCT Legal Office
Tel: (703) 308-6721
Fax: (703) 308-6459

Blakely, Sokoloff, Taylor & Zafman, LLP
12400 Wilshire Blvd., Seventh Floor
Los Angeles, CA 90025-1026

UNITED STATES PATENT AND TRADEMARK OFFICE

COMMISSIONER FOR PATENT
UNITED STATES PATENT AND TRADEMARK OFFIC
ALEXANDRIA, VA 22313-1450
www.uspto.go

OFFICIAL GAZETTE NOTICE

37 CFR 1.47 Notice by Publication

Notice is hereby given of the filing of an application with a petition under 37 CFR 1.47 requesting acceptance of the application without the signature of all inventors. The petition has been granted. A notice has been sent to the last known address of the non-signing inventor. The inventor whose signature is missing (Philip Head) may join in the application by promptly filing an appropriate oath or declaration complying with 37 CFR 1.63. The international application number is PCT/GB01/04772 and was filed on October 26, 2001 in the names of Fergal McGovern, Martin Chapman, Garrett Conaty, Philip Head and Michael Hogan for the invention entitled SOFTWARE DEVELOPMENT. The national stage application number is 10/415,466 and has a 35 U.S.C. 371(c)(1), (2) and (4) date of October 26, 2004.

28 MAR 2005

#5

UNITED STATES PATENT AND TRADEMARK OFFICE

Commissioner for Patents
United States Patent and Trademark Office
P.O. Box 1450
Alexandria, VA 22313-1450
www.uspto.gov

Harold V. Stotland
Seyfarth Shaw LLP
55 E. Monroe Street - Suite 4200
Chicago, IL 60603-5803

In re Application of	:	
NG	:	
Application No.: 10/415,467	:	DECISION ON PETITION
Filing Date: 29 April 2003	:	
Attorney Docket No.: 400100	:	UNDER 37 CFR 1.181
For: BRIDGE FOR ATTACHING AUXILIARY	:	
LENSES	:	

This decision is in response to applicant's "Request For Reinstatement or Petition to Withdraw Holding of Abandonment And Petition to Revive" filed 08 March 2005 in the United States Patent and Trademark Office (USPTO). The request is being treated as a petition under 37 CFR 1.181. No petition fee is required.

BACKGROUND

On 31 October 2001, applicant filed international application PCT/CA01/01538. The thirty-month period for paying the basic national fee in the United States expired at midnight on 30 April 2003.

On 29 April 2003, applicant filed a transmittal letter for entry into the national stage in the United States, which was accompanied by the requisite basic national fee as required by 35 U.S.C. 371(c)(1) and a preliminary amendment. An oath or declaration as required by 35 U.S.C. 371 (c)(4) was not filed.

On 11 July 2003, applicant was mailed a NOTIFICATION OF MISSING REQUIREMENTS UNDER 35 U.S.C. 371 (Form PCT/DO/EO/905) informing applicant of the need to provide an executed oath or declaration of the inventor, in compliance with 37 CFR 1.497(a) and (b), identifying the application by the International application number and international filing date. Applicant was given two months to respond and advised that this time period could be extended with a proper petition and payment of fees.

On 18 October 2004, applicant was mailed a "Notification of Abandonment" (Form PCT/DO/EO/909) informing application that the present application was abandoned as to the National stage in the United States for failure to respond to the Form PCT/DO/EO/905 mailed 11 July 2003.

On 08 March 2005, applicant filed the present petition under 37 CFR 1.181 to withdraw the holding of abandonment. Included in the filed papers is a stamped postcard showing that the petition considered herein was originally filed with the USPTO on 05 November 2004.

DISCUSSION

As detailed in Official Gazette notice 1156 OG 53 and the Manual of Patent Examining Procedure 711.03(c), a petition under 37 CFR 1.181 requesting relief based upon non-receipt of an office action must be accompanied by:

> A statement from the practitioner stating that the Office action was not received by the practitioner and attesting to the fact that a search of the file jacket and docket records indicates that the Office action was not received. A copy of the docket record where the non-received Office action would have been entered had it been received and docketed must be attached to and referenced in practitioner's statement.

Applicant has provided a statement that the Office Action was not received, however, applicant has not satisfied the other three requirements including a statement that a search of the file jacket and docket records indicates that the Office action was not received and a copy of the firm's docket record for the relevant time period. As such, it is not possible to grant applicant's petition at this time. Applicant is advised that in any renewed petition it is necessary to provide a copy of the docket record for the entire firm for the time period in question to assure that the notice was not inadvertently docked to a different file.

CONCLUSION

Applicant's petition under 37 CFR 1.181 is **DISMISSED**.

Applicant is hereby afforded **TWO (2) MONTHS** from the mail date of this decision to file any request for reconsideration. Any reconsideration request should include a cover letter entitled, "Renewed Petition Under 37 CFR 1.181."

Any further correspondence with respect to this matter should be directed to Mail Stop PCT, Commissioner for Patents, Office of PCT Legal Administration, P.O. Box 1450, Alexandria, Virginia 22313-1450, with the contents of the letter marked to the attention of the Office of PCT Legal Administration.

Derek A. Putonen
Attorney Advisor
Office of PCT Legal Administration
Tel: (571) 272-3294
Fax: (571) 273-0459

05 JUL 2005

#7

UNITED STATES PATENT AND TRADEMARK OFFICE

Commissioner for Patents
United States Patent and Trademark Office
P.O. Box 1450
Alexandria, VA 22313-1450
www.uspto.gov

Harold V. Stotland
Seyfarth Shaw LLP
55 E. Monroe Street - Suite 4200
Chicago, IL 60603-5803

In re Application of NG Application No.: 10/415,467 PCT No.: PCT/CA01/01538 Int. Filing Date: 31 October 2001 Priority Date: 31 October 2001 Attorney Docket No.: 400100 For: BRIDGE FOR ATTACHING AUXILIARY LENSES	DECISION ON RENEWED PETITIONS UNDER 37 CFR1.181

This decision is in response to applicant's "Supplemental Request For Reinstatement or Petition to Withdraw Holding of Abandonment And Petition to Revive" filed by facsimile on 05 June 2005 and originally filed 11 April 2005 in the United States Patent and Trademark Office (USPTO).

BACKGROUND

On 28 March 2005, applicant was mailed a decision dismissing applicant's petition under 37 CFR 1.181 to withdraw the holding of abandonment in the present U.S. National stage application. Applicant was afforded two months to file any request for reconsideration.

On 05 June 2005, applicant filed the present renewed petition under 37 CFR 1.181 to withdraw the holding of abandonment accompanied by a copy of the request filed 11 April 2005 and a stamped return postcard.

DISCUSSION

I. Petition Under 37 CFR 1.181 to Accept Copy of Previously Filed Petition

Applicant has provided a legible copy of the receipt postcard which shows a USPTO date stamp, "JC07 Rec'd PCT/PTO 11 APR 2005" and clearly identifies the supplemental request considered herein as well as listing the serial number, docket number and applicant name. The evidence is sufficient to establish that the renewed petition was received in the USPTO on 11 April 2005. Applicant has certified that the copy of the renewed petition and declaration is a true and complete copy of the papers originally filed on 11 April 2005. The present filing is therefore considered a timely response to the decision mailed 28 March 2005. As such, it is proper to **GRANT** applicant's petition under 37 CFR 1.181 at this time.

II. Renewed Petition Under 37 CFR 1.181

As detailed in Official Gazette notice 1156 OG 53 and the Manual of Patent Examining Procedure 711.03(c), a petition under 37 CFR 1.181 requesting relief based upon non-receipt of an office action must be accompanied by:

> A statement from the practitioner stating that the Office action was not received by the practitioner and attesting to the fact that a search of the file jacket and docket records indicates that the Office action was not received. A copy of the docket record where the non-received Office action would have been entered had it been received and docketed must be attached to and referenced in practitioner's statement.

Applicant previously satisfied item (1) in providing a statement that the Office Action was not received. Applicant has currently provided statements attesting that searches of the file jacket and the docket record do not show any indication that the Office action mailed 11 July 2003 was ever received. In addition, applicant has provided a copy of the relevant docket record for the firm for the time period in question. As such, it is proper to grant applicant's renewed petition at this time to withdraw the holding of abandonment.

CONCLUSION

Applicant's renewed petition under 37 CFR 1.181 to withdraw the holding of abandonment is **GRANTED**.

The "Notification of Abandonment" mailed 18 October 2004 is hereby **VACATED**.

The application has an international filing date of 31 October 2001 under 35 U.S.C. 363, and will be given a date of **05 November 2004** under 35 U.S.C. 371(c)(1), (c)(2) and (c)(4).

This application is being returned to the DO/EO/US for processing in accordance with this decision.

Derek A. Putonen
Attorney Advisor
Office of PCT Legal Administration
Tel: (571) 272-3294
Fax: (571) 273-0459

UNITED STATES PATENT AND TRADEMARK OFFICE

COMMISSIONER FOR PATENTS
UNITED STATES PATENT AND TRADEMARK OFFICE
P.O. BOX 1450
ALEXANDRIA, VA 22313-1450
www.uspto.gov

26 SEP 2003

Edward Langer
c/o Shiboleth, Yisraeli, Roberts, Zisman & Co.
395 Fifth Avenue
60th Floor
New York, NY 10118

In re Application of	:	
Joseph Finkelstein	:	
Application Serial No.: 10/415,473	:	
PCT No.: PCT/IL01/00861	:	DECISION ON PETITION UNDER
Intl. Filing Date: 11 September 2001	:	
Priority Date: 11 September 2000	:	37 CFR 1.137(b)
Attorney's Docket No.: 1705	:	
For: Anti-Bird Roosting Device	:	

This decision is in response to applicants' "PETITION FOR REVIVAL OF AN UNINTENTIONALLY ABANDONED APPLICATION", filed 30 April 2003.

BACKGROUND

On 11 September 2001, applicants filed international Application PCT/IL/00861 which claimed priority to an earlier application filed on 11 September 2000. A copy of the international application was communicated to the United States Patent and Trademark Office from the International Bureau on 02 April 2003. Accordingly, pursuant to 37 CFR 1.495, the thirty month period for paying the basic national fee expired at midnight 11 March 2003.

On 30 April 2003, applicants filed the instant petition and national stage papers in the United States, including, inter alia, a transmittal letter stating that the application was being filed under 35 U.S.C. 371, a copy of the international application, and the oath or declaration for the sole inventor.

DISCUSSION

Under 37 CFR 1.137(b), a petition requesting that the application be revived on the grounds of unintentional delay must be filed promptly after applicant becomes aware of the abandonment and must be accompanied by: (1) the required reply, unless previously filed, (2) the petition fee required by law, (3) a statement that the entire delay in filing the required reply from the due date of the reply until the filing of a grantable petition was unintentional and (4) a terminal disclaimer (for applications filed before 8 June 1995).

As to item (1), the petition was accompanied by the required reply in the form of a check for payment of the U.S. Basic National Fee.

As to item (2), the petition is accompanied by the required petition fee.

As to item (3), the petition is accompanied by applicants' statement that 'the entire delay in filing the required reply from the due date of the reply until the filing of a grantable petition was unintentional."

As to item (4), a terminal disclaimer is not required in the present case.

CONCLUSION

The request to revive the application abandoned under 35 U.S.C. 371(d) is granted as to the National stage in the United States of America.

The petition under 37 CFR 1.137 (b) is **GRANTED**.

This application is being forwarded to the National Stage Processing Branch of the Office of PCT Operations to continue national stage processing of the present application, including according the present application a 35 USC 371 (c) date of 30 April 2003.

Leonard Smith
PCT Legal Examiner
PCT Legal Office

Kenya A. McLaughlin
PCT Legal Office Detailee
PCT Legal Office

Telephone: (703) 305-0010
Facsimile: (703) 308-6459

OIPE JC54
OCT 30 2003
PATENT & TRADEMARK OFFICE

DT02 Rec'd PCT/PTO 30 OCT 2003

PCT

UNITED STATES PATENT AND TRADEMARK OFFICE

COMMISSIONER FOR PATENTS
UNITED STATES PATENT AND TRADEMARK OFFICE
P.O. BOX 1450
ALEXANDRIA, VA 22313-1450
www.uspto.gov

26 SEP 2003

Edward Langer
c/o Shiboleth, Yisraeli, Roberts, Zisman & Co.
395 Fifth Avenue
60th Floor
New York, NY 10118

In re Application of	:	
Joseph Finkelstein	:	
Application Serial No.: 10/415,473	:	
PCT No.: PCT/IL01/00861	:	DECISION ON PETITION UNDER
Intl. Filing Date: 11 September 2001	:	
Priority Date: 11 September 2000	:	37 CFR 1.137(b)
Attorney's Docket No.: 1705	:	
For: Anti-Bird Roosting Device	:	

This decision is in response to applicants' "PETITION FOR REVIVAL OF AN UNINTENTIONALLY ABANDONED APPLICATION", filed 30 April 2003.

BACKGROUND

On 11 September 2001, applicants filed international Application PCT/IL/00861 which claimed priority to an earlier application filed on 11 September 2000. A copy of the international application was communicated to the United States Patent and Trademark Office from the International Bureau on 02 April 2003. Accordingly, pursuant to 37 CFR 1.495, the thirty month period for paying the basic national fee expired at midnight 11 March 2003.

On 30 April 2003, applicants filed the instant petition and national stage papers in the United States, including, inter alia, a transmittal letter stating that the application was being filed under 35 U.S.C. 371, a copy of the international application, and the oath or declaration for the sole inventor.

DISCUSSION

Under 37 CFR 1.137(b), a petition requesting that the application be revived on the grounds of unintentional delay must be filed promptly after applicant becomes aware of the abandonment and must be accompanied by: (1) the required reply, unless previously filed, (2) the petition fee required by law, (3) a statement that the entire delay in filing the required reply from the due date of the reply until the filing of a grantable petition was unintentional and (4) a terminal disclaimer (for applications filed before 8 June 1995).

As to item (1), the petition was accompanied by the required reply in the form of a check for payment of the U.S. Basic National Fee.

As to item (2), the petition is accompanied by the required petition fee.

As to item (3), the petition is accompanied by applicants' statement that 'the entire delay in filing the required reply from the due date of the reply until the filing of a grantable petition was unintentional."

As to item (4), a terminal disclaimer is not required in the present case.

CONCLUSION

The request to revive the application abandoned under 35 U.S.C. 371(d) is granted as to the National stage in the United States of America.

The petition under 37 CFR 1.137 (b) is **GRANTED**.

This application is being forwarded to the National Stage Processing Branch of the Office of PCT Operations to continue national stage processing of the present application, including according the present application a 35 USC 371 (c) date of 30 April 2003.

Leonard Smith
PCT Legal Examiner
PCT Legal Office

Kenya A. McLaughlin
PCT Legal Office Detailee
PCT Legal Office

Telephone: (703) 305-0010
Facsimile: (703) 308-6459

UNITED STATES PATENT AND TRADEMARK OFFICE

Commissioner for Patents
United States Patent and Trademark Office
P.O. Box 1450
Alexandria, VA 22313-1450
www.uspto.gov

MAILED
FROM DIRECTORS OFFICE
AUG 03 2005
TECHNOLOGY CENTER 3600

Edward Langer
Shiboleth, Yisraeli, Roberts and Zisman LLP
350 Fifth Ave., 60th Floor
New York, NY 10118

In re Application of Finkelstein Application No. 10/415,473 Filed: April 30, 2003	: : : : :	DECISION ON PETITION Under 37 CFR 1.181

For: ANTI-BIRD ROOSTING DEVICE

This is a decision on applicant's Petition to Withdraw Final Rejection As Premature filed under 37 CFR 1.181. This petition was filed July 7, 2005.

The petition is **DENIED.**

Applicant's petition alleges that the Final Office action mailed March 3, 2005 should not have been made final. An interview with the examiner was held on August 11, 2004 where it was indicated that the crossing spikes limitation appeared drawn to allowable subject matter. The final rejection, which was mailed subsequent to the interview, contained a rejection based on Donoho 5,433,029 which disclosed crossing spikes. Applicant argues that this reference was of record at the time of the reference and the examiner erred in making the rejection after she stated the crossed spikes was allowable claim language. A review of the file shows no such record of the '029 patent at the time of the interview and this reference is listed on the form PTO-892 provided with the final action. There is no indication anywhere else in the file that this reference was of record or that the examiner was aware of it.

Applicant also argues that the final is premature because the examiner misunderstood the technical basis of the invention. There appears to be no basis for this statement. Clearly the reference meets the specific limitations of the claim. The essence of the invention, as applicant refers to on page 4 of his petition, is not relevant. This merely suggests that applicant's claims are broad enough to cover other devices that do not meet the essence of his invention. The examiner only needs to apply art that meets the specific claim language.

After careful consideration of applicant's appeal, none of the arguments raised support the position that the finality of the action was improper.

For the reasons above, the finality of the action mailed March 7, 2005 was proper and the petition is **DENIED**.

The application is being forwarded to the examiner of record for consideration of the amendment after final rejection filed July 7, 2005.

John J. Love
Patent Technology Center 3600
Telephone No.: (571) 272-5250

Cf/sm: 8/02/05
SM

RECEIVED
CENTRAL FAX CENTER
JUL 07 2005

COPY FOR DIRECTORS USE ONLY. DO NOT SCAN

I hereby certify that this paper (10 pages) is being facsimile transmitted to the USPTO on the date shown below.
Date July 7 '05
Edward Langer, Reg. No. 30,564

IN THE UNITED STATES PATENT AND TRADEMARK OFFICE

In re Application of : FINKELSTEIN, Joseph

BY FAX (703) 872-9306

Serial No. : 10/415,473

Filed : April 30, 2003

For : ANTI-BIRD ROOSTING DEVICE

Group Art Unit 3635
Examiner: GREEN, C. M.

Tel Aviv, Israel
July 7, 2005

Hon. Commissioner of Patents and Trademarks
Alexandria, VA 22313

Sir:

PETITION TO WITHDRAW FINAL REJECTION AS PREMATURE

PETITION UNDER 37 CFR SEC 1.181

Applicant hereby petitions to withdraw the Final Rejection status of the Office Action mailed March 7, 2005 as premature.

Applicant believes that the Final Rejection was mailed:
1) before the development of an issue, and
2) the Final Rejection contains a technical inaccuracy which reflects a misunderstanding on the part of the Examiner, resulting in a "hasty" and inconsistent prosecution record.

To support this position, Applicant presents his supporting arguments.

TIMING OF THIS PETITION

The present petition is being submitted after receipt of the Final Rejection Office Action. The Final Rejection was mailed on March 7, 2005.

PAGE 1/11 * RCVD AT 7/7/2005 11:49:53 AM [Eastern Daylight Time] * SVR:USPTO-EFXRF-1/1 * DNIS:8729306 * CSID:+972 3 7103322 * DURATION (mm-ss):03-54

It is believed that in these circumstances, that this petition is timely, as the case is still pending per MPEP Sec. 706.07(d).

SUMMARY OF PROSECUTION HISTORY

The subject application was filed on April 30, 2003 as a National Stage of a PCT application having an international filing date of September 11, 2001.

The first Office Action was mailed on June 22, 2004.

An interview was conducted by the undersigned at the US PTO with Examiner Green on August 11, 2004, during which a demonstration model of the invention was exhibited and deposited with the Examiner.

The Examiner issued an interview summary indicating agreement had been reached on a proposed amendment to the claims.

A response was filed in accordance with the agreement, on September 6, 2004.

A technicality in the September 6, 2004 response resulted in the mailing of an Office Action on November 29, 2004, and a re-submitted response was filed on December 5, 2004.

A Final Rejection Office Action was mailed on April 5, 2005 rejecting all of the claims.

The above summarizes the status of the prosecution thus far.

FINAL REJECTION SENT PRIOR TO DEVELOPMENT OF AN ISSUE - PLACES UNFAIR EXTRA BURDEN ON APPLICANT

In the discussion with the Examiner during the interview, the issue of projecting spikes in which a "portion of the spikes project inwardly so as to cross one another" was identified as the key to patentability, as the Examiner did not have this feature in the cited prior art, specifically Donoho (US Pat. 6,250,023).

Another Donoho patent, which was listed in the prior art of record (US Pat. 5,433,029) prior to the interview, was NOT cited specifically during the interview.

Therefore, the Applicant's receipt of a Final Office Action with a rejection based on a feature allegedly shown in existing prior art of record (Donoho '029), was a surprise.

The feature of inwardly projecting spikes which "cross one another" was the beginning of the development of an issue, which has now become the basis for an additional amendment in the attached amendment in response to the Final Rejection.

PAGE 2/11 * RCVD AT 7/7/2005 11:49:53 AM [Eastern Daylight Time] * SVR:USPTO-EFXRF-1/1 * DNIS:8729306 * CSID:+972 3 7103322 * DURATION (mm-ss):03-54

It is believed that in these circumstances, that this petition is timely, as the case is still pending per MPEP Sec. 706.07(d).

SUMMARY OF PROSECUTION HISTORY

The subject application was filed on April 30, 2003 as a National Stage of a PCT application having an international filing date of September 11, 2001.

The first Office Action was mailed on June 22, 2004.

An interview was conducted by the undersigned at the US PTO with Examiner Green on August 11, 2004, during which a demonstration model of the invention was exhibited and deposited with the Examiner.

The Examiner issued an interview summary indicating agreement had been reached on a proposed amendment to the claims.

A response was filed in accordance with the agreement, on September 6, 2004.

A technicality in the September 6, 2004 response resulted in the mailing of an Office Action on November 29, 2004, and a re-submitted response was filed on December 5, 2004.

A Final Rejection Office Action was mailed on April 5, 2005 rejecting all of the claims.

The above summarizes the status of the prosecution thus far.

FINAL REJECTION SENT PRIOR TO DEVELOPMENT OF AN ISSUE - PLACES UNFAIR EXTRA BURDEN ON APPLICANT

In the discussion with the Examiner during the interview, the issue of projecting spikes in which a "portion of the spikes project inwardly so as to cross one another" was identified as the key to patentability, as the Examiner did not have this feature in the cited prior art, specifically Donoho (US Pat. 6,250,023).

Another Donoho patent, which was listed in the prior art of record (US Pat. 5,433,029) prior to the interview, was NOT cited specifically during the interview.

Therefore, the Applicant's receipt of a Final Office Action with a rejection based on a feature allegedly shown in existing prior art of record (Donoho '029), was a surprise.

The feature of inwardly projecting spikes which "cross one another" was the beginning of the development of an issue, which has now become the basis for an additional amendment in the attached amendment in response to the Final Rejection.

PAGE 3/11 * RCVD AT 7/7/2005 11:49:53 AM [Eastern Daylight Time] * SVR:USPTO-EFXRF-1/1 * DNIS:8729306 * CSID:+972 3 7103322 * DURATION (mm-ss):03-54

However, the finality of the rejection, is deemed improper.

The reason for this is that with respect to the present invention, there is a long prosecution history, including prior art references cited and arguments made, which placed the matter of an internal defense mechanism as a major, primary theme.

As proof of this, in the PCT prosecution of International Application PCT/IL 01/00861, a Written Opinion of the IPEA/US was mailed on June 25, 2003.

Although the Donoho ('029) reference used in the Final Rejection was not cited in the PCT prosecution, Applicant responded to the Written Opinion in a letter dated July 24, 2003 (a copy of which is attached here) by clearly stating that the invention was related to an internal defense mechanism (page 2, line 10).

The context of the invention was originally framed in relation to the internal defense mechanism, and the definition of this was being worked out during the interview at the PTO, in August 2004.

From the above it is clear that the issue for patentability of the inventive device was always the internal defense mechanism. Not only was this part of the original specification, but also, as part of the PCT examination process, **conducted by USPTO Examiners**, it was argued and highlighted by the Applicant that the invention was related to an internal defense mechanism.

Therefore, the Examiner's statement in the Interview Summary that <u>there was an agreement</u>, was relied upon by the Applicant.

Applicant believes that if the Examiner considered Donoho ('029) to be relevant, this should have been raised at the time of the interview, and not in a "surprise" Final Rejection.

<u>TECHNICAL INACCURACY OF THE FINAL REJECTION</u>

As understood by the Applicant's attorney, if there is a technical inaccuracy in the Final Rejection, this can be considered as a basis for the present petition to withdraw the Final Rejection and re-open the prosecution.

It is believed that the Examiner has misunderstood the technical basis of the invention, which relates to bird behavior and biology. In this context, the Examiner's analysis is flawed.

The invention provides an internal defense mechanism based on the arrangement of the spikes which project inwardly, in proximate relation to the vertical spikes, and the symmetrical configuration

PAGE 4/11 * RCVD AT 7/7/2005 11:49:53 AM [Eastern Daylight Time] * SVR:USPTO-EFXRF-1/1 * DNIS:8729306 * CSID:+972 3 7103322 * DURATION (mm-ss):03-54

allowing multiple modules to cover a large area, without gaps between spikes, as contrasted with Donoho ('029) and others.

The technical inaccuracy of the final rejection is that it places Donoho ('029) and Burnside ('171) at the same level of proction against bird roosting as the internal defense mechanism disclosed in the present invention.

It is Applicant's position that the Examiner's statement in the Final Rejection that both Donoho ('029) and Burnside ('171) disclose spikes which "cross one another to form an internal defense mechanism" indicates a technical inaccuracy.

The fact that the spikes cross one another is not the essence of the invention, but this feature serves to highlight fact that the spikes are projecting at various angles from <u>different</u> originating base elements. Thus, what is required is a refinement of the claim language to clarify this point, and this is presented in the accompanying amendment.

Therefore, it is concluded that the Examiner's decision to send a Final Rejection was premature.

It should have been clear from the outset, in view of the PCT prosecution history, which was available to the Examiner, that the internal defense mechanism was key to patentability, and the citations of Donoho ('029) and Burnside ('171) should have been presented <u>earlier</u>, if considered relevant.

It is believed that the technical inaccuracy of the current Final Rejection is established, since the internal defense mechanism has a technical distinction over the prior art.

Therefore, it remains Applicant's position that the finality of the last Office Action was premature, and the status of the application should be changed so that it is not in the post-final rejection condition.

Therefore, it is respectfully requested that the present petition be reviewed promptly and that the Applicant be notified of any questions requiring an immediate response, with a view toward resolving the status of this case immediately.

Respectfully submitted,

Edward Langer, Pat. Atty.
Attorney for Applicant
Reg. No. 30, 564

324804/1
Shiboleth, Yisraeli, Roberts and Zisman LLP
350 Fifth Ave., 60th Floor
New York, NY 10118
212-244-4111 telephone, 212-563-7108 fax

PAGE 5/11 * RCVD AT 7/7/2005 11:49:53 AM [Eastern Daylight Time] * SVR:USPTO-EFXRF-1/1 * DNIS:8729306 * CSID:+972 3 7103322 * DURATION (mm-ss):03-54

UNITED STATES PATENT AND TRADEMARK OFFICE

Commissioner for Patents
United States Patent and Trademark Office
P.O. Box 1450
Alexandria, VA 22313-1450
www.uspto.gov

MAILED
FROM DIRECTORS OFFICE

SEP 07 2005

TECHNOLOGY CENTER 3600

Edward Langer
Shiboleth, Yisraeli, Roberts and Zisman LLP
350 Fifth Ave., 60th Floor
New York, NY 10118

In re Application of
Finkelstein
Application No. 10/415473
Filed: April 30, 2003

For: ANTI-BIRD ROOSTING DEVICE

RENEWED
DECISION ON PETITION
Under 37 CFR 1.181

This is a decision on applicant's Request for Reconsideration of the Decision on Petition filed August 29, 2005. The petition requested that the finality of the Office action mailed March 3, 2005 was premature and should be withdrawn.

The petition is **GRANTED.**

The record indicates that in an interview a tentative agreement was reached on patentable subject matter and an amendment was filed along those lines. Upon reconsideration, the examiner rejected the amended claims using art of record. In these circumstances it is not deemed proper from an equitable viewpoint to make the rejection final.

The application is being forwarded to the examiner of record for withdrawal of the finality of the previous Office action and consideration of the amendment after final rejection filed July 7, 2005.

John J. Love
Patent Technology Center 3600
Telephone No.: (571) 272-5250
Cf 09/07/05

RECEIVED
CENTRAL FAX CENTER

AUG 29 2005

IN THE UNITED STATES PATENT AND TRADEMARK OFFICE

In re Application of : FINKELSTEIN, Joseph

Serial No. : 10/415,473

Filed : April 30, 2003

For : ANTI-BIRD ROOSTING DEVICE

BY FAX
(571) 273-8300

Group Art Unit 3635
Examiner: GREEN, C. M.

Tel Aviv, Israel
August 29, 2005

Hon. Commissioner of Patents and Trademarks
Alexandria, VA
ATTENTION: EX. CARL FRIEDMAN, Tel. (571) 272-6842

URGENT REQUEST FOR RECONSIDERATION OF DECISION
DENYING PETITION TO WITHDRAW FINAL REJECTION AS PREMATURE

Sir:

Applicant hereby requests reconsideration of the decision mailed August 3, 2005 denying Applicant's petition to withdraw the Final Rejection in the subject case, based on the petition filed July 7, 2005.

Upon receipt of the decision, Applicant's attorney, the undersigned, immediately attempted to contact the Director Mr. John Love, whose name appears in the signature of the above decision. Via several telephone calls, Applicant's attorney learned that the decision was written by Ex. Carl Friedman. In a telephone call to Mr. Friedman on August 22, 2005, an attempt was made to explain a clear **ERROR** which appears in the reason given for the decision to deny the petition. Mr. Friedman indicated in the phone conversation that he could see the error but would need a formal request for reconsideration.

Applicant's attorney wrote a handwritten note on the decision and immediately forwarded this by fax to the USPTO on August 22, 2005, in an attempt to expedite the reconsideration

process, but was notified by telephone to his local agent, that a more formal presentation of the reconsideration was required.

Thus, this request for reconsideration restates the facts presented in the handwritten note and the phone conversations.

On page 1 of the decision, it is stated that "A review of this file shows no such record of the '029 patent at the time of the interview" (Donoho US Patent 5,433,029).

But in fact, as pointed out to Ex. Friedman by phone, the June 22, 2004 Office Action (prior to the Final Rejection) clearly lists the '029 reference on the PTO-892 form.

Since this reference was in the record prior to the interview conducted on August 11, 2004, Applicant maintains his earlier-stated position that the Final Rejection was premature and should be withdrawn.

Summarizing what was previously stated in the petition, the existence of the '029 reference in the record prior to the interview, and the subsequent interview indicating an agreement had been reached, followed by the citation of the '029 reference as the basis for a Final Rejection, was an unfair surprise reflecting a gross inconsistency in the prosecution.

Reconsideration and grant of the petition is earnestly solicited and the Examiner is requested to act with all due speed since the 6-month period after the Final Rejection expires on September 7, 2005, and Applicant should not be forced to have to consider carrying additional fees for an RCE procedure, unless actually needed.

Respectfully submitted,

Edward Langer, Atty. for Applicant
Registration No. 30,564

CONTACT LOCAL AGENT - AMY HUNT AT (703) 486-1150

OR
Shiboleth, Yisraeli, Roberts and Zisman LLP
350 Fifth Ave., 60th Floor
New York, NY 10118
212-244-4111
212-563-7108 fax

23 FEB 2004

UNITED STATES PATENT AND TRADEMARK OFFICE

23 FEB 2004

COMMISSIONER FOR PATENTS
UNITED STATES PATENT AND TRADEMARK OFFICE
P.O. BOX 1450
ALEXANDRIA, VA 22313-1450
www.uspto.gov

Eric M. Dunston
Burnes, Doane, Swecker, & Mathis, L.L.P.
P.O. Box 1404
Alexandria, Va 22313-1404

In re Application of DELACOURTE, André Application No.: 10/415,479 PCT Application No.: PCT/FR01/03410 International Filing Date: 05 November 2001 Priority Date: 03 November 2000 Attorney Docket No.: 032475-010 For: MEANS FOR DETECTING PATHOLOGICAL TRANSFORMATION OF THE APP PROTEIN AND THEIR USES	DECISION ON PETITION UNDER 37 CFR 1.137(b)

Applicant's "Petition for Revival of an International Application for Patent Designating the U.S. Abandoned Unintentionally Under 37 CFR 1.137(b)," filed in the United States Patent and Trademark Office (USPTO) on 02 October 2003 is **GRANTED**.

BACKGROUND

On 05 November 2001, applicant filed international application number PCT/FR01/03410. This application claims priority of a French application that was filed on 03 November 2000. A copy of the international application was transmitted by the International Bureau on 10 May 2002. The deadline for paying the basic national fee for the United States National Stage was thirty months from the priority date, that is 05 May 2003 (03 May 2003 was a Saturday).

On 18 September 2003, applicant filed, *inter alia*, the petition to revive and checks for the basic national fee and the petition fee.

DISCUSSION

A petition to revive an abandoned application under 37 CFR 1.137(b) must be filed without intentional delay from the time the application became abandoned and/or applicant first became aware of the abandoned status of the application. A petition under 37 CFR 1.137(b) must be accompanied by (1) a statement that the entire delay in filing the required reply from the due date for the reply until the filing of a grantable petition was unintentional, (2) a proper reply, (3) the petition fee required by law (37 CFR 1.17(m)), and (4) a terminal disclaimer and fee (if the international application was filed prior to 08 June 1995). A proper reply requires payment of the basic national fee and submission of a copy of the international application, if such a copy has not already been communicated by the International Bureau.

Applicant's statement that "The entire delay in filing the required reply from the due date for the required reply until the filing of a grantable petition under 37 CFR 1.137(b) was unintentional," satisfies the requirements of 37 CFR 1.137(b)(3). The basic national fee and the petition fee have been paid. A copy of the international application was previously communicated by the International Bureau. A terminal disclaimer is not required because the application was filed on or after 08 June 1995. Therefore, the requirements for a grantable petition under 37 CFR 1.137(b) have been satisfied.

CONCLUSION

The petition under 37 CFR 1.137(b) to revive the application abandoned as to the National Stage in the United States of America is **GRANTED** .

The application is being returned to the National Stage Processing Division of the Office of PCT Operations for continued processing, including the mailing of a Notice of Missing Requirements (PCT/DO/EO/905) indicating that an oath or declaration of the inventors, the surcharge for late filing of the oath or declaration, an English-language translation of the international application, and the processing fee for late filing of the English-language translation are due.

Boris Milef
PCT Legal Examiner
PCT Legal Administration

Ankur Parekh
Detailee
PCT Legal Administration

Telephone: (703) 308-1315
Facsimile: (703) 308-6459

26 OCT 2004

#5

UNITED STATES PATENT AND TRADEMARK OFFICE

COMMISSIONER FOR PATENTS
UNITED STATES PATENT AND TRADEMARK OFFICE
P.O. BOX 1450
ALEXANDRIA, VA 22313-1450
www.uspto.gov

BURNS DOANE SWECKER & MATHIS LLP
POST OFFICE BOX 1404
ALEXANDRIA VA 22313-1404

In re Application of	:	
DELACOURTE et al.	:	
Application No.: 10/415,479	:	DECISION
PCT No.: PCT/FR01/03410	:	
Int. Filing Date: 05 November 2001	:	
Priority Date: 03 November 2000	:	
Attorney Docket No.: 032475-010	:	
For: MEANS FOR DETECTING PATHOLOGICAL	:	
TRANSFORMATION OF THE APP PROTEIN AND	:	
THEIR USES	:	

This is a decision on applicants' submission filed 15 June 2004 in the United States Patent and Trademark Office (USPTO).

BACKGROUND

On 05 November 2001, applicants filed international application PCT/FR01/03410, which designated the United States and claimed priority of an earlier application filed on 03 November 2000. A copy of the international application was communicated from the International Bureau to the USPTO on 10 May 2002. The thirty-month period for paying the basic national fee in the United States expired at midnight on 05 May 2003 (03 May 2003 being a Saturday).

On 30 April 2003, applicants filed a submission for entry into the national stage in the United States. The U.S. Basic National Fee was not provided, however.

On 02 October 2003, applicants submitted, *inter alia*, a "PETITION FOR REVIVAL OF AN INTERNATIONAL APPLICATION FOR PATENT DESIGNATING THE US. ABANDONED UNINTENTIONALLY UNDER 37 CFR 1.137(b)" and the U.S. Basic National Fee.

On 23 February 2004, a decision was mailed granting applicants' petition under 37 CFR 1.137(b).

On 16 March 2004, the United States Designated/Elected Office (DO/EO/US) mailed a NOTIFICATION OF MISSING REQUIREMENTS UNDER 35 U.S.C. 371 (Form PCT/DO/EO/905) indicating, *inter alia*, that an oath or declaration of the inventors in compliance with 37 CFR 1.497(a)-(b), the surcharge under 37 CFR 1.492(e) for providing the

oath or declaration later than thirty months from the priority date, a translation of the application into English, and the processing fee under 37 CFR 1.492(f) for providing the translation later than thirty months from the priority date were required.

On 15 June 2004, applicants filed, *inter alia*, a petition/fee for a one-month extension of time, a "PETITION UNDER 37 C.F.R. § 1.47(b)", and a declaration of inventors.

DISCUSSION

37 CFR 1.41(a)(4) states:

> The inventorship of an international application entering the national stage under 35 U.S.C. 371 is that inventorship set forth in the international application, which includes any change effected under PCT Rule 92bis. See § 1.497(d) and (f) for filing an oath or declaration naming an inventive entity different from the inventive entity named in the international application, or if a change to the inventive entity has been effected under PCT Rule 92bis subsequent to the execution of any declaration filed under PCT Rule 4.17(iv) (§ 1.48(f)(1) does not apply to an international application entering the national stage under 35 U.S.C. 371).

The declaration filed 15 June 2004 does not list the inventorship set forth in the international application. The declaration identifies an additional inventor not listed in the international application--Dorothee VANUXEEM. A Form PCT/IB/306 (NOTIFICATION OF THE RECORDING OF A CHANGE) from the International Bureau indicating that an inventor has been added does not appear in the file. Nor is there any other indication that a PCT Rule 92bis change has been made in the above-identified international application. Accordingly, the inventorship in the national stage is the inventorship set forth in the international application and the declaration filed 15 June 2004 is not sufficient.

Applicants are required to file a declaration in compliance with 37 CFR 1.497(a)-(b) naming the proper inventive entity, or a proper change of inventorship under 37 CFR 1.497(d), or a Form PCT/IB/306 indicating a change effected under PCT Rule 92bis corresponding to the declarations filed 23 February 2004.

37 CFR 1.497(d) states

> If the oath or declaration filed pursuant to 35 U.S.C. 371(c)(4) and this section names an inventive entity different from the inventive entity set forth in the international application, or if a change to the inventive entity has been effected under PCT Rule 92 bis subsequent to the execution of any oath or declaration which was filed in the application under PCT Rule 4.17(iv) or this section and the inventive entity thus changed is different from the inventive entity identified in any such oath or declaration, applicant must submit:
>
> (1) A statement from each person being added as an inventor and from each person being deleted as an inventor that any error in inventorship in the international application occurred without deceptive intention on his or her part;
>
> (2) The processing fee set forth in § 1.17(i); and

(3) If an assignment has been executed by any of the original named inventors, the written consent of the assignee (see § 3.73(b) of this chapter); and
(4) Any new oath or declaration required by paragraph (f) of this section.

The requirements of 37 CFR 1.497(d) may be waived upon the filing of a request and fee under 37 CFR 1.183 (along with the request and fee under 37 CFR 1.497(d)) to permit the filing of a statement by less than all the parties required to submit a statement. However, these occasions are rare and such a waiver will not be considered unless the facts of record unequivocally support the correction sought. As 37 CFR 1.497(d) is intended as a simple procedural remedy and does not represent a substantive determination as to inventorship, issues relating to the inventors' or alleged inventors' actual contributions to conception and reduction to practice are not appropriate for consideration in determining whether the record unequivocally supports the correction sought. *Cf.*, MPEP 201.03, II, A, (set forth in part below).

Petitions under 37 CFR 1.47 are not applicable to the requirement for a statement from each person being added as an inventor and each person deleted as any inventor that any error in inventorship in the international application occurred without deceptive intention on his or her part. Accordingly, the petition under 37 CFR 1.47 filed 15 June 2004 is moot. *Cf.*, MPEP 201.03, II, A, (set forth in part below).

An available remedy to obtain correction of inventorship where waiver of a required statement is not available to correct the inventorship in a particular application is to refile the application naming the correct inventive entity. A request under 37 CFR 1.497(d) would not then be required in the newly filed application as no correction would be needed. Furthermore, a request under 37 CFR 1.497(d) would also not be required in the prior application that was refiled, since the prior application will be abandoned. Benefit of the parent application's filing date would be available under 35 U.S.C. 120 provided there is at least one inventor overlap between the two applications. (Note: a sole-to-sole correction would not obtain benefit under 35 U.S.C. 120). *Cf.*, MPEP 201.03, II, A, (set forth in part below).

MPEP 201.03, II, A states in part:

On very infrequent occasions, the requirements of 37 CFR 1.48(a) have been waived upon the filing of a request and fee under 37 CFR 1.183 (along with the request and fee under 37 CFR 1.48(a)) to permit the filing of a statement by less than all the parties required to submit a statement. In re Cooper, 230 USPQ 638, 639 (Dep. Assist. Comm'r Pat. 1986). However, such a waiver will not be considered unless the facts of record unequivocally support the correction sought. In re Hardee, 223 USPQ 1122, 1123 (Comm'r Pat. 1984). As 37 CFR 1.48(a) is intended as a simple procedural remedy and does not represent a substantive determination as to inventorship, issues relating to the inventors' or alleged inventors' actual contributions to conception and reduction to practice are not appropriate for consideration in determining whether the record unequivocally supports the correction sought.

In those situations where an inventor to be added refuses to submit a statement

supporting the addition or such party cannot be reached, waiver under 37 CFR 1.183 of the requirement for a statement from that party would be appropriate upon a showing of such refusal or inability to reach the inventor. Every existing assignee of the original named inventors must give its consent to the requested correction. Where there is more than one assignee giving its consent, the extent of that interest (percentage) should be shown. Where no assignment has been executed by the inventors, or if deletion of a refusing inventor is requested, waiver will not be granted absent unequivocal support for the correction sought. Petitions under 37 CFR 1.47 are not applicable to the requirement for statements from each originally named inventor.

An available remedy to obtain correction of inventorship where waiver of a required statement is not available to correct the inventorship in a particular application is to refile the application naming the correct inventive entity. A request under 37 CFR 1.48(a) would not then be required in the newly filed application as no correction would be needed. Furthermore, a request under 37 CFR 1.48(a) would also not be required in the prior application that was refiled, since the prior application will be abandoned. Benefit of the parent application's filing date would be available under 35 U.S.C. 120 provided there is at least one inventor overlap between the two applications. (Note: a sole-to-sole correction would not obtain benefit under 35 U.S.C. 120).

CONCLUSION

For the above reasons, applicants' petition under 37 CFR 1.47(a) is **DISMISSED** as **MOOT**.

If reconsideration on the merits of this petition is desired, a proper response must be filed within TWO (2) MONTHS from the mail date of this decision. **Failure to timely file the proper response will result in abandonment of this application.** Any reconsideration request should include a cover letter entitled "Petition Under 37 CFR 1.183". Extensions of time may be obtained under 37 CFR 1.136(a).

Please direct further correspondence with respect to this matter to Mail Stop PCT, Commissioner for Patents, Office of PCT Legal Administration, P.O. Box 1450, Alexandria, Virginia 22313-1450, with the contents of the letter marked to the attention of the Office of PCT Legal Administration.

Daniel Stemmer
Legal Examiner
PCT Legal Affairs
Office of Patent Cooperation Treaty
Legal Administration
Telephone: (571) 272-3301
Facsimile: (571) 273-0459

23 MAY 2005

UNITED STATES PATENT AND TRADEMARK OFFICE

COMMISSIONER FOR PATENTS
UNITED STATES PATENT AND TRADEMARK OFFICE
P.O. BOX 1450
ALEXANDRIA, VA 22313-1450
www.uspto.gov

BURNS DOANE SWECKER & MATHIS LLP
POST OFFICE BOX 1404
ALEXANDRIA VA 22313-1404

In re Application of	:	
DELACOURTE et al.	:	
Application No.: 10/415,479	:	DECISION
PCT No.: PCT/FR01/03410	:	
Int. Filing Date: 05 November 2001	:	
Priority Date: 03 November 2000	:	
Attorney Docket No.: 032475-010	:	
For: MEANS FOR DETECTING PATHOLOGICAL	:	
TRANSFORMATION OF THE APP PROTEIN AND	:	
THEIR USES	:	

This is a decision on applicants' submission filed 23 December 2004 in the United States Patent and Trademark Office (USPTO).

BACKGROUND

On 05 November 2001, applicants filed international application PCT/FR01/03410, which designated the United States and claimed priority of an earlier application filed on 03 November 2000. A copy of the international application was communicated from the International Bureau to the USPTO on 10 May 2002. The thirty-month period for paying the basic national fee in the United States expired at midnight on 05 May 2003 (03 May 2003 being a Saturday).

On 30 April 2003, applicants filed a submission for entry into the national stage in the United States. The U.S. Basic National Fee was not provided, however.

On 02 October 2003, applicants submitted, *inter alia*, a "PETITION FOR REVIVAL OF AN INTERNATIONAL APPLICATION FOR PATENT DESIGNATING THE US. ABANDONED UNINTENTIONALLY UNDER 37 CFR 1.137(b)" and the U.S. Basic National Fee.

On 23 February 2004, a decision was mailed granting applicants' petition under 37 CFR 1.137(b).

On 16 March 2004, the United States Designated/Elected Office (DO/EO/US) mailed a NOTIFICATION OF MISSING REQUIREMENTS UNDER 35 U.S.C. 371 (Form PCT/DO/EO/905) indicating, *inter alia*, that an oath or declaration of the inventors in compliance with 37 CFR 1.497(a)-(b), the surcharge under 37 CFR 1.492(e) for providing the

oath or declaration later than thirty months from the priority date, a translation of the application into English, and the processing fee under 37 CFR 1.492(f) for providing the translation later than thirty months from the priority date were required.

On 15 June 2004, applicants filed, *inter alia*, a petition/fee for a one-month extension of time, a "PETITION UNDER 37 C.F.R. § 1.47(b)" (which was properly treated as a petition under 37 CFR 1.47(a)), and a declaration of inventors.

On 26 October 2004, a decision was mailed dismissing applicant's petition under 37 CFR 1.47(a) as moot. Specifically, it was noted that the declaration filed 15 June 2004 did not list the inventorship set forth in the international application, that the declaration identified an additional inventor not listed in the international application--Dorothee VANUXEEM, that no Form PCT/IB/306 (NOTIFICATION OF THE RECORDING OF A CHANGE) from the International Bureau indicating that an inventor had been added appeared in the file, and that there was no other indication that a PCT Rule 92bis change had been made in the above-identified international application. Accordingly, it was noted that since the inventorship in the national stage is the inventorship set forth in the international application, the declaration filed 15 June 2004 was not sufficient.

On 23 December 2004, applicants filed the instant submission which was accompanied by, *inter alia*, a copy of a Form PCT/IB/306 (NOTIFICATION OF THE RECORDING OF A CHANGE) indicating that Dorothee VANUXEEM has been added as an inventor, a "PETITION UNDER 37 CFR 1.183[1] & RENEWED PETITION UNDER 37 CFR 1.47(a)", copies of letters to Dorothee Vanuxeem and copies of postal receipts for these letters.

DISCUSSION

The inventorship in the international application now corresponds to the inventorship set forth in the declaration filed 15 June 2004 pursuant to the Form PCT/IB/306.

A petition under 37 CFR 1.47(a) must be accompanied by: (1) the fee under 37 CFR 1.17(h); (2) factual proof that the missing joint inventor refuses to execute the application or cannot be reached after diligent effort; (3) a statement of the last known address of the missing inventor; and (4) an oath or declaration by each 37 CFR 1.47(a) applicant on his or her own behalf and on behalf of the non-signing joint inventor.

Items (1), (3), and (4) have been satisfied.

Item (2) has not been satisfied. As noted in MPEP § 409.03(d), the statement of facts must be signed, where at all possible, by a person having firsthand knowledge of the facts recited

---

[1]No petition under 37 CFR 1.183 is presented by applicants and thus such a petition has not been addressed in this decision.

therein. Here, a statement of facts has not been provided. Moreover, even if the statements in the petition made by Erin M. Dunston were considered a statement of facts, it does not appear that she has firsthand knowledge. Statements based on hearsay will not normally be accepted. Additionally, to establish a refusal to sign, it is required that the inventor be presented with the application papers (specification, including claims, drawings, and oath or declaration). See MPEP 409.03(d). "It is reasonable to require that the inventor be presented with the application papers before a petition under 37 CFR 1.47 is granted since such a procedure ensures that the inventor is apprised of the application to which the oath or declaration is directed. *In re Gray*, 115 USPQ 80 (Comm'r Pat. 1956)." MPEP 409.03(d). It is not clear whether Dorothee Vanuxeem was presented with a copy of the application papers, in part because translations of the letters to her have not been provided. Finally, translations of the postal receipts have not been provided either.

CONCLUSION

For the above reasons, applicants' petition under 37 CFR 1.47(a) is **DISMISSED** without prejudice.

If reconsideration on the merits of this petition is desired, a proper response must be filed within TWO (2) MONTHS from the mail date of this decision. **Failure to timely file the proper response will result in abandonment of this application.** Any reconsideration request should include a cover letter entitled "Petition Under 37 CFR 1.47(a)". Extensions of time may be obtained under 37 CFR 1.136(a).

Please direct further correspondence with respect to this matter to Mail Stop PCT, Commissioner for Patents, Office of PCT Legal Administration, P.O. Box 1450, Alexandria, Virginia 22313-1450, with the contents of the letter marked to the attention of the Office of PCT Legal Administration.

Daniel Stemmer
Legal Examiner
PCT Legal Affairs
Office of Patent Cooperation Treaty
Legal Administration
Telephone: (571) 272-3301
Facsimile: (571) 273-0459

20 SEP 2005

UNITED STATES PATENT AND TRADEMARK OFFICE

Commissioner for Patents
United States Patent and Trademark Office
P.O. Box 1450
Alexandria, VA 22313-1450
www.uspto.gov

BURNS DOANE SWECKER & MATHIS LLP
POST OFFICE BOX 1404
ALEXANDRIA VA 22313-1404

In re Application of	:	
DELACOURTE et al.	:	
Application No.: 10/415,479	:	DECISION
PCT No.: PCT/FR01/03410	:	
Int. Filing Date: 05 November 2001	:	
Priority Date: 03 November 2000	:	
Attorney Docket No.: 032475-010	:	
For: MEANS FOR DETECTING PATHOLOGICAL	:	
TRANSFORMATION OF THE APP PROTEIN AND	:	
THEIR USES	:	

This is a decision on applicants' submission filed 23 August 2005 in the United States Patent and Trademark Office (USPTO).

BACKGROUND

On 05 November 2001, applicants filed international application PCT/FR01/03410, which designated the United States and claimed priority of an earlier application filed on 03 November 2000. A copy of the international application was communicated from the International Bureau to the USPTO on 10 May 2002. The thirty-month period for paying the basic national fee in the United States expired at midnight on 05 May 2003 (03 May 2003 being a Saturday).

On 30 April 2003, applicants filed a submission for entry into the national stage in the United States. The U.S. Basic National Fee was not provided, however.

On 02 October 2003, applicants submitted, *inter alia*, a "PETITION FOR REVIVAL OF AN INTERNATIONAL APPLICATION FOR PATENT DESIGNATING THE US. ABANDONED UNINTENTIONALLY UNDER 37 CFR 1.137(b)" and the U.S. Basic National Fee.

On 23 February 2004, a decision was mailed granting applicants' petition under 37 CFR 1.137(b).

On 16 March 2004, the United States Designated/Elected Office (DO/EO/US) mailed a NOTIFICATION OF MISSING REQUIREMENTS UNDER 35 U.S.C. 371 (Form PCT/DO/EO/905) indicating, *inter alia*, that an oath or declaration of the inventors in compliance with 37 CFR 1.497(a)-(b), the surcharge under 37 CFR 1.492(e) for providing the oath or declaration later than thirty months from the priority date, a translation of the application into

English, and the processing fee under 37 CFR 1.492(f) for providing the translation later than thirty months from the priority date were required.

On 15 June 2004, applicants filed, *inter alia*, a petition/fee for a one-month extension of time, a "PETITION UNDER 37 C.F.R. § 1.47(b)" (which was properly treated as a petition under 37 CFR 1.47(a)), and a declaration of inventors.

On 26 October 2004, a decision was mailed dismissing applicant's petition under 37 CFR 1.47(a) as moot. Specifically, it was noted that the declaration filed 15 June 2004 did not list the inventorship set forth in the international application, that the declaration identified an additional inventor not listed in the international application--Dorothee VANUXEEM, that no Form PCT/IB/306 (NOTIFICATION OF THE RECORDING OF A CHANGE) from the International Bureau indicating that an inventor had been added appeared in the file, and that there was no other indication that a PCT Rule 92bis change had been made in the above-identified international application. Accordingly, it was noted that since the inventorship in the national stage is the inventorship set forth in the international application, the declaration filed 15 June 2004 was not sufficient.

On 23 December 2004, applicants filed a submission which was accompanied by, *inter alia*, a copy of a Form PCT/IB/306 (NOTIFICATION OF THE RECORDING OF A CHANGE) indicating that Dorothee VANUXEEM has been added as an inventor, a "PETITION UNDER 37 CFR 1.183[1] & RENEWED PETITION UNDER 37 CFR 1.47(a)", copies of letters to Dorothee Vanuxeem and copies of postal receipts for these letters.

On 23 May 2005, a decision was mailed dismissing applicants' petition under 37 CFR 1.47(a). Specifically, it was noted that factual proof that the nonsigning joint inventor refuses to execute the application had not been provided.

On 23 August 2005, applicants filed the instant submission which was accompanied by, *inter alia*, a petition/fee for a one month extension of time, a declaration of facts by Chantal Peaucelle, English translations of the letters and postal receipts filed with the 23 December 2004 submission, a copy of a letter sent to Dorothee Vanuxeem on 19 July 2005 and an English translation thereof, and a copy of a postal receipt for the letter sent 19 July 2005 and an English translation thereof.

DISCUSSION

A petition under 37 CFR 1.47(a) must be accompanied by: (1) the fee under 37 CFR 1.17(h); (2) factual proof that the missing joint inventor refuses to execute the application or cannot be reached after diligent effort; (3) a statement of the last known address of the missing

---

[1]A petition under 37 CFR 1.183 was not actually presented by applicants and thus such a petition was not addressed in the subsequent decision.

inventor; and (4) an oath or declaration by each 37 CFR 1.47(a) applicant on his or her own behalf and on behalf of the non-signing joint inventor.

As noted in the decision mailed 23 May 2005, items (1), (3), and (4) have been satisfied.

Item (2) has now been satisfied as well.

CONCLUSION

For the above reasons, applicants' renewed petition under 37 CFR 1.47(a) is **GRANTED**.

As provided in 37 CFR 1.47(a), a notice of the filing of this application will be forwarded to the non-signing inventors at their last known addresses of record.

A notice of the filing of the application under 37 CFR 1.47(a) will be published in the Official Gazette.

This application is being forwarded to the National Stage Processing Branch of the Office of PCT Operations to continue national stage processing of the application, including the accordation of a 35 U.S.C. §§371(c)(1), (c)(2), and (c)(4) date of **15 June 2004**.

Daniel Stemmer
Legal Examiner
PCT Legal Affairs
Office of Patent Cooperation Treaty
Legal Administration
Telephone: (571) 272-3301
Facsimile: (571) 273-0459

UNITED STATES PATENT AND TRADEMARK OFFICE

Commissioner for Patents
United States Patent and Trademark Office
P.O. Box 1450
Alexandria, VA 22313-1450
www.uspto.gov

BIOTECH BEACH LAW GROUP, PC
625 BROADWAY, SUITE 1210
SAN DIEGO, CA 92101

COPY MAILED

SEP 0 8 2008

OFFICE OF PETITIONS

In re Application of	:	
Holger KLAPPROTH, et al	:	
Application No. 10/415,481	:	DECISION ON PETITION
Filed: April 30, 2003	:	TO WITHDRAW
Attorney Docket No. SCHWAB0006	:	FROM RECORD
	:	

This is a decision on the Request to Withdraw as attorney or agent of record under 37 C.F.R. § 1.36(b), filed June 19 2008.

The request is **NOT APPROVED.**

A grantable request to withdraw as attorney/agent of record must be signed by every attorney/agent seeking to withdraw or contain a clear indication that one attorney is signing on behalf of another/others. The Office requires the practitioner(s) requesting withdrawal to certify that he, she, or they have: (1) given reasonable notice to the client, prior to the expiration of the response period, that the practitioner(s) intends to withdraw from employment; (2) delivered to the client or a duly authorized representative of the client all papers and property (including funds) to which the client is entitled; and (3) notified the client of any responses that may be due and the time frame within which the client must respond, pursuant 37 CFR 10.40(c).

The request cannot be approved because there is no indication that the acts noted above have been performed.

The request cannot be approved because no reasons for withdrawal have been provided. The Office cannot, at this time, determine whether practitioner's request is one of the mandatory or permissive reasons enumerated in 37 CFR 10.40. Any subsequent requests must include reasons for withdrawal. Please note that there is a space provided for on PTO/SB/83 (Request to Withdraw as Attorney or Agent) to supply practitioner's reasons.

All future communications from the Office will continue to be directed to the above-listed address until otherwise notified by applicant.

Telephone inquiries concerning this decision should be directed to the undersigned at 571-272-6735.

Diane Goodwyn
Petitions Examiner
Office of Petitions

cc: RAYMOND WAGENKNECHT
BIOTECH BEACH LAW GROUP, PC
625 BROADWAY, STE. 1210
SAN DIEGO, CA 92101

UNITED STATES PATENT AND TRADEMARK OFFICE

Commissioner for Patents
United States Patent and Trademark Office
P.O. Box 1450
Alexandria, VA 22313-1450
www.uspto.gov

GRIFFIN & SZIPL, PC
SUITE PH-1
2300 NINTH STREET, SOUTH
ARLINGTON, VA 22204

COPY MAILED
SEP 17 2008

In re Application of	:	
Holger KLAPPROTH, et al	:	
Application No. 10/415,481	:	DECISION ON PETITION
Filed: April 30, 2002	:	TO WITHDRAW
Attorney Docket No. SCHWAB006	:	FROM RECORD
	:	

This is a decision on the Request to Withdraw as attorney or agent of record under 37 C.F.R. § 1.36(b), filed July 16, 2008.

The request is **DISMISSED** as moot.

A review of the file record indicates that the power of attorney to Griffin & Szipl, PC, has been revoked by the assignee of the patent application on July 21, 2008. Accordingly, the request to withdraw under 37 C.F.R. § 1.36(b) is moot.

The correspondence address of record has been changed and the new correspondence address is the address indicated below.

Telephone inquires concerning this decision should be directed to undersigned at 571-272- 6735.

Diane Goodwyn
Petitions Examiner
Office of Petitions

cc: MICRONAS HOLDING GMBH
HANS-BUNTE-STR.19
FREIBURG 719108
GERMANY

UNITED STATES PATENT AND TRADEMARK OFFICE

Commissioner for Patents
United States Patent and Trademark Office
P.O. Box 1450
Alexandria, VA 22313-1450
www.uspto.gov

MILLEN, WHITE, ZELANO & BRANIGAN, P.C.
2200 CLARENDON BLVD.
SUITE 1400
ARLINGTON VA 22201

MAILED
JUN 22 2010
OFFICE OF PETITIONS

In re Application of :
Ralf Wagner et al. :
Application No. 10/415,483 : ON PETITION
Filed: October 21, 2003 :
Attorney Docket No. WEICKM-0027

This is a decision on theAPPLICATION FOR PATENT TERM ADJUSTMENT filed November 9, 2009 which is being treated under 37 C.F.R. 1.705(b). Applicant requests that the determination of patent term adjustment be corrected from 538 days to 897 days. Applicant requests this correction in part on the basis that the Office will take in excess of three years to issue this patent and in light of the recent court decision in Wyeth v. Dudas, No. 07-1492 (D.D.C. September 30, 2008).[1]

To the extent that this application for patent term adjustment requests reconsideration of the patent term adjustment as it relates to the Office's failure to issue the patent within 3 years of the filing date, the application for patent term adjustment under 37 CFR 1.705(b) is **DISMISSED as PREMATURE**.

Knowledge of the actual date the patent issues is required to calculate the amount, if any, of additional patent term patentees are entitled to for Office failure to issue the patent within three years. See 37 CFR 1.702(b). (This is true even where a request for continued examination (RCE) was filed). The computer will not undertake the § 1.702(b) calculation until the actual date of issuance of the patent has been determined. Likewise, the computer will not calculate any further Office delay under 37 CFR 1.702(a)(4) or applicant delay under 37 CFR 1.704(c)(10) until the actual date of issuance of the patent has been determined. As such, the Office cannot make a determination on the correctness of the patent term adjustment until the patent has issued.

Requesting reconsideration of the patent term adjustment to be indicated on the patent under 37 CFR 1.705(b) based on the initial determination of patent term adjustment and a projected issuance date of the patent (or even the filing date of the request for continued examination) is premature. Accordingly, it is appropriate to dismiss such a request as premature.

---

[1]Reconsidered in light of the Court of Appeals for the Federal Circuit's decision in *Wyeth v. Kappos*, 2009-1120 (Fed. Cir. 1-7-2010).

With respect to the over 3 year calculation, rather than file an application for patent term adjustment under 37 CFR 1.705(b) contesting the 37 CFR 1.702(b) calculation at the time of the mailing of the notice of allowance, applicants are advised that they may wait until the time of the issuance of the patent and file a request for reconsideration of the patent term adjustment pursuant to 37 CFR 1.705(d). As the USPTO does not calculate the amount of time earned pursuant to 37 CFR 1.702(b) until the time of the issuance of the patent, the Office will consider any request for reconsideration of the patent term adjustment due to an error in the calculation of 37 CFR 1.702(b) to be timely if the request for reconsideration is filed within two months of the issuance of the patent. However, as to all other bases for contesting the initial determination of patent term adjustment received with the notice of allowance, applicants must timely file an application for patent term adjustment prior to the payment of the issue fee.

To the extent that applicant otherwise requests correction of the patent term adjustment at the time of the mailing of the Notice of Allowance, the application for patent term adjustment is **DISMISSED**.

The Office initially determined a patent term adjustment based on an adjustment for PTO delay of six hundred forty-one (641) days, pursuant to 35 U.S.C. 154(b)(1)(A)(I) and 37 CFR § 1.702(a)(1).

Applicant disputes the period of adjustment for Office failure to mail a first action under 35 U.S.C. 132. Applicant asserts that for the present application, October 21, 2003 is the date Applicants filed all the necessary requirements under 35 U.S.C. § 371(c).

A review of the application history confirms that the requirements of 35 U.S.C. 371 were fulfilled on October 24, 2003 and not on October 21, 2003 as indicated by applicants and thus the number of days in the period of adjustment pursuant to § 1.703(a)(1) for the Office's mailing of a first action under 35 U.S.C. 132 on September 26, 2006, is 641 days and is correct as indicated in the determination of patent term adjustment at the time of the mailing of the Notice of Allowance. This period is counted beginning on the day after the date that is fourteen months after the date on which the application fulfilled the requirements of 35 U.S.C. 371, October 24, 2003, and ending on the date of the mailing of the first action under 35 U.S.C. 132, September 26, 2006.

Given the 641 days for PTO delay, the correct determination of patent term adjustment at the time of the mailing of the Notice of Allowance is five hundred thirty-eight (538) days.

The Office acknowledges submission of the $200.00 fee set forth in 37 CFR 1.18(e). No additional fees are required.

Applicants are reminded that any delays by the Office pursuant to 37 CFR 1.702(a)(4) and 1.702(b) and any applicant delays under 37 CFR 1.704(c)(10) will be calculated at the time of the issuance of the patent and applicants will be notified of the revised patent term adjustment to be indicated on the patent in the Issue Notification letter that is mailed to applicants approximately three weeks prior to issuance.

The Office of Data Management has been advised of this decision. This matter is being referred to the Office of Data Management for issuance of the patent.

Telephone inquiries specific to this decision should be directed to Senior Petitions Attorney Patricia Faison-Ball at (571) 272-3212.

Anthony Knight
Director
Office of Petitions

09 JUL 2003

#3

UNITED STATES PATENT AND TRADEMARK OFFICE

COMMISSIONER FOR PATENTS
UNITED STATES PATENT AND TRADEMARK OFFICE
P.O. BOX 1450
ALEXANDRIA, VA 22313-1450
www.uspto.gov

Carl Oppendahl
Oppendahl & Larson LLP
P.O. Box 5068
Dillon, CO 80435

In re Application of	:	
STEVENS, John K.	:	
Application No.: 10/415,502	:	DECISION ON PETITION
PCT No.: PCT/US01/26840	:	UNDER 37 CFR 1.137(b)
Int. Filing Date: 28 August 2001	:	
Priority Date: 28 August 2000	:	
Attorney Docket No.: JKMS.P-008-NP	:	
For: HIGH SECURITY WIRELESS KEY FOR ASYNCHRONOUS DELIVERY DROP BOXES	:	

The petition to revive under 37 CFR 1.137(b) filed 28 April 2003 in the above-captioned application is hereby **GRANTED** as follows:

Applicant's statement that "the entire delay in filing the required reply from the due date for the reply until the filing of a grantable petition under 37 CFR 1.137(b) was unintentional" meets the requirements of 37 CFR 1.137(b)(3).

A review of the application file reveals that applicant has submitted the basic national fee of $360 and the requirements of 37 CFR 1.137(b) have been satisfied. Therefore, the request to revive the application abandoned under 35 U.S.C. 371(d) is granted as to the National stage in the United States of America.

Deposit Account No. 15-0610 has been charged a $65.00 surcharge fee under 37 CFR 492(e) for supplying an oath or declaration later than 30 months from the earliest claimed priority date.

This application is being returned to the United States Designated/Elected Office for processing in accordance with this decision.

Anthony Smith

Anthony Smith
Attorney-Advisor
Office of PCT Legal Administration
Telephone: (703) 308-6314
Facsimile: (703) 308-6459

UNITED STATES PATENT AND TRADEMARK OFFICE

UNITED STATES DEPARTMENT OF COMMERCE
United States Patent and Trademark Office
Address: COMMISSIONER FOR PATENTS
P.O. Box 1450
Alexandria, Virginia 22313-1450
www.uspto.gov

CONLEY ROSE, P.C.
David A. Rose
P. O. BOX 3267
HOUSTON, TX 77253-3267

Mail Date: 04/20/2010

Applicant	: Klaus Biester	: DECISION ON REQUEST FOR
Patent Number	: 7576447	: RECALCULATION of PATENT
Issue Date	: 08/18/2009	: TERM ADJUSTMENT IN VIEW
Appliction No	: 10/415,510	: OF WYETH AND NOTICE OF INTENT TO
Filed	: 07/21/2003	: ISSUE CERTIFICATE OF CORRECTION
		:

The Request for Recalculation is **GRANTED** to the extent indicated.

The patent term adjustment has been determined to be **1398** days. The USPTO will *sua sponte* issue a certificate of correction reflecting the amount of PTA days determined by the recalculation.

Prior to the issuance of the certificate of correction, the USPTO will afford patentee an opportunity to be heard and request reconsideration. Accordingly, patentee has **one month or thirty (30) days**, whichever is longer, to file a request for reconsideration of this patent term adjustment calculation. See 35 U.S.C. 154(b)(3)(B)(ii) and 37 CFR 1.322(a)(4). No extensions of time will be granted under 37 CFR 1.136.

Patentee should use document code PET.OP if electronically filing a request for reconsideration of this patent term adjustment calculation. The patentee must also include the information required by 37 CFR 1.705(b)(2) and the fee required by 37 CFR 1.18(e). If patentee does not file a timely request for reconsideration of this patent term adjustment calculation including the information required by 37 CFR 1.705(b)(2) and the fee required by 37 CFR 1.18(e), the USPTO will issue a certificate of correction reflecting the PTA determination noted above.

Patentee should be aware that in order to preserve the right to review in the United States District Court for the District of Columbia of the USPTO patent term adjustment determination, patentee must ensure that he or she also take the steps required under 35 U.S.C. 154(b)(4)(A) in a timely manner. Nothing in the request for recalculation should be construed as providing an alternative time frame for commencing a civil action under 35 U.S.C. 154(b)(4)(A).

Any questions concerning this decision should be directed to the Office of Patent Legal Administration at 571-272-7702.

UNITED STATES PATENT AND TRADEMARK OFFICE

UNITED STATES DEPARTMENT OF COMMERCE
United States Patent and Trademark Office
Address: COMMISSIONER FOR PATENTS
P.O. Box 1450
Alexandria, Virginia 22313-1450
www.uspto.gov

CONLEY ROSE, P.C.
David A. Rose
P. O. BOX 3267
HOUSTON, TX 77253-3267

Mail Date: 05/17/2010

Applicant : Klaus Biester
Patent Number : 7576447
Issue Date : 08/18/2009
Application No : 10/415,510
Filed : 07/21/2003

: NOTICE CONCERNING IMPROPER
: CALCULATION OF PATENT TERM
: ADJUSTMENT BASED UPON USPTO
: IMPROPERLY MEASURING REDUCTION
: PERIOD UNDER 37 CFR 1.704(c)(10).

The United States Patent and Trademark Office (USPTO) discovered that in processing the recent recalculation decisions mailed in response to patentee's filed Request for Recalculation of Patent Term Adjustment in view of Wyeth, the USPTO improperly measured the reduction period for reductions under 37 CFR 1.704(c)(10). Pursuant to 37 CFR 1.704(c)(10), patentee's reduction begins on the date of filing the amendment under 37 CFR 1.312 ("1.312 amendment") or other related paper and ends on the date that the Office mails a response to the filing of the 1.312 amendment or other paper. It has been discovered that during the recalculation, the calculation failed to the limit the reduction to the mail date of the response to the 1.312 amendment or other paper. Accordingly, patentee's reductions were greater than warranted.

This notice **VACATES** the previous GRANTED request for recalculation and provides patentee with a revised GRANTED recalculation.

The patent term adjustment has been determined to be **1434** days. The USPTO will *sua sponte* issue a certificate of correction reflecting the amount of patent term adjustment (PTA) days determined by the recalculation.

Prior to the issuance of the certificate of correction, the USPTO will afford patentee an opportunity to be heard and request reconsideration. Accordingly, patentee has **one month or thirty (30) days** from the mail date of this notice, whichever is longer, to file a request for reconsideration of this PTA calculation. See 35 U.S.C. § 154(b)(3)(B)(ii) and 37 CFR 1.322(a)(4).

Patentee should use document code PET.OP if electronically filing a request for reconsideration of this PTA calculation. The patentee must also include the information required by 37 CFR 1.705(b)(2), and the fee required by 37 CFR 1.18(e). If patentee does not file a timely request for reconsideration of this PTA calculation, including the information required by 37 CFR 1.705(b)(2) and the fee required by 37 CFR 1.18(e), the USPTO will issue a certificate of correction reflecting the PTA determination noted above.

Patentee should be aware that in order to preserve the right of review of the USPTO's PTA determination in the United States District Court for the District of Columbia, patentee must ensure that the steps required under 35 U.S.C. § 154 (b)(4) are taken in a timely manner. Nothing in the request for recalculation should be construed as providing an alternative time frame for commencing a civil action under 35 U.S.C. § 154(b)(4).

UNITED STATES PATENT AND TRADEMARK OFFICE

Commissioner for Patents
United States Patent and Trademark Office
P.O. Box 1450
Alexandria, VA 22313-1450
www.uspto.gov

MAILED

FEB 07 2007

Technology Center 2100

Bradley D. Lytle
OBLON, SPIVAK, MCCLELLAND, MAIER & NEUSTADT, P.C.
1940 DUKE STREET
ALEXANDRIA VA 22314

In re Application of: Toshihiro Morita
Application No. 10/415,513
Filed: September 29, 2003
Attorney Docket No.: 275817US6PCT
For: INFORMATION PROCESSING APPARATUS AND METHOD

DECISION ON PETITION
UNDER 37 CFR 1.181
TO WITHDRAW REQUIREMENT
FOR INFORMATION

This is a decision on the petition filed on August 24, 2006, under 37 CFR 1.181 to invoke Supervisory Authority with respect to the Office action mailed on June 16, 2006, and requests that the requirement under 37 CFR 1.105 be withdrawn as improper.

The Petition is **GRANTED.**

RECENT PROSECUTION HISTORY

November 28, 2005	Non-Final Rejection (FAOM) mailed.
February 1, 2006	IDS filed.
February 15, 2006	IDS filed.
March 23, 2006	IDS, and Amendment filed canceling all original claims, and reciting new claims 13-36.
May 17, 2006	IDS filed.
June 16, 2006	Final Rejection mailed, rejecting all claims over art, and requiring information under 37 CFR 1.105.
August 24, 2006	Instant petition filed. After final amendment filed.
September 5, 2006	Advisory action mailed.

September 19, 2006 Request for Continued Examination filed.

December 8, 2006 Non-Final action mailed.

REQUIREMENTS

A petition under 3 7 CFR § 1.181 must include: (1) a statement of facts involved and (2) the point or points to be reviewed and the action requested. Note, the mere filing of a petition will not stay any period for reply that may be running against the application, nor act as a stay of other proceedings. In addition § 1.181 (f) sets forth: any petition under this part not filed within two months of the mailing date of the action or notice from which relief is requested may be dismissed as untimely. Further, when a petition is taken from an action or requirement of an examiner in the ex parte prosecution of an application, ... it may be required that there have been a proper request for reconsideration (37 CFR § 1.111) and a repeated action by the Examiner.

The petition filed on August 24, 2006, includes elements (1) and (2) above, as well as a request for reconsideration. The advisory action mailed September 5, 2006, constitutes a repeated action by the Examiner.

RELIEF REQUESTED

The instant petition filed under 37 CFR 1.181 request the requirement under 37 CFR 1.105, made in the final rejection mailed on June 16, 2006 be withdrawn.

OPINION

Petitioner presents the following arguments in support of the position that the requirement under 37 CFR 1.105 was improper:

1. Rule 105 is improper if utilized in an attempt to obtain opinion information.
2. The requirement to show support for the "claim language added to any present claims on amendment and any new claims" imposes a duty on the applicant which is inconsistent with 37 CFR 1.105.

ANALYSIS

The Non-Final Office action mailed on November 28, 2005, rejected claims 1-12 under section 35 USC § 102 over Kaplan (US 2001/0056434). A response to the first Office action was timely filed and received in the Patent and Trademark Office (Office) on March 23, 2006. In the response, all of the pending claims (1-12) were canceled "without prejudice and disclaimer" by Applicant and new claims 13-36 were added. An Office action was mailed June 16, 2006 rejecting all claims (13-36), under section 35 USC § 103(a), over Kaplan in view of Eustace (US 7000188). The Examiner held that the amendment necessitated the new ground(s) of rejection and made the June 16, 2006 Office action final. Examiner also included the above mentioned requirement for Information in the final office action mailed on June 16, 2006.

The relevant sections of the M.P.E.P. are set forth below:

MPEP 704.11 states in part:

> There must be a reasonable basis for the information required that would aid in the examination of an application or treatment of some matter. A requirement for information under 37 CFR 1.105 places a substantial burden on the applicant that is to be minimized by clearly focusing the reason for the requirement and the scope of the expected response. Thus, the scope of the requirement should be narrowly defined, and a requirement under 37 CFR 1.105 may only be made when the examiner has a reasonable basis for requiring information.

MPEP 704.11(b) III states in part:

> A requirement for information is not proper when no further action would be taken by the examiner. The reasonable necessity criteria for a requirement for information implies further action by the examiner. This means that actions in which requirements for information necessary for examination are made should generally be a non-final action because the applicant's reply must be considered and applied as appropriate.

On careful review of the prosecution history, it does not seem that the examiner has provided a reasonable basis for requiring information. Further, it seems that no further action would be taken by the examiner since all claims in this application were finally rejected over art, in the action mailed on June 16, 2006.

Accordingly, the Petition is **GRANTED**.

Jack Harvey, Director
Technology Center 2100
Computer Architecture, Software,
and Information Security

UNITED STATES PATENT AND TRADEMARK OFFICE

Commissioner for Patents
United States Patent and Trademark Office
P.O. Box 1450
Alexandria, VA 22313-1450
www.uspto.gov

12/8/09

Patent No. :7229689
Ser. No. :10415520
Inventor(s) : Yimin Qin
Issued : 6/12/07
Title : Polysaccharide Fibres
Docket No. :

Re: Request for Certificate of Correction

Consideration has been given your request for the issuance of a certificate of correction for the above-identified patent under the provisions of Rule(s) 1.322 and/or 1.323.

Assignees' names and addresses (assignment data) printed in a patent, are based *solely* on information supplied in the appropriate space for identifying the assignment data, i.e., item 3 of the Issue Fee Transmittal Form PTOL-85B. Granting of a request under 37 CFR 3.81(b) is required to correct applicant's error providing ***incorrect or erroneous*** assignment data, *before* issuance of a Certificate of Correction, under 37 CFR 1.323 *(see Manual of Patent Examining Procedures (M.P.E.P) Chp.1400, sect. 1481).* This procedure is required *at any time after the issue fee is paid*, including after issuance of the patent.

In view of the foregoing, your request, in this mater, is hereby denied.

A request to correct the Assignee under 37 CFR 3.81(b) should include:

A. **the processing fee set forth in 37 CFR 1.117(h) (currently $130);**
B. a statement that the failure to include the correct assignee name on the PTOL-85B was inadvertent; and
C. a copy of the Notice of Recordation of Assignment Document, reflecting the reel and frame number where the assignment(s) is recorded and/or reflecting proof of *the date* the assignment was submitted for recordation.

In the Request, Applicant(s) may request that the file be forwarded to Certificates of Correction Branch, for issuance of a Certificate of Correction, if the Request is granted.

Any request under 37 CFR 3.81(b) should be directed to the following address or facsimile number:

By mail: Mail Stop PETITIONS
Commissioner for Patents
Post Office Box 1450
Alexandria, VA 22313-1450

By hand: Customer Service Window
Mail Stop Petitions
Randolph Building
401 Dulany Street
Alexandria, VA 22314

By fax: (703) 872-9306
ATTN: Office of Petitions

If a fee (currently $100) was previously submitted for consideration of a Request for Certificate of Correction, under CFR 1.323, to correct assignment data, , no additional fee is required.

A certificate of correction will be issued to correct the remaining errors noted in your request.

Henry Randall
Decisions & Certificates
of Correction Branch
(703) 756-1571

Mark C. Comtois
Duane Morris LLP
505 9th Street, N.W. Suite 1000
Washington DC 2006

HR

UNITED STATES PATENT AND TRADEMARK OFFICE

Commissioner for Patents
United States Patent and Trademark Office
P.O. Box 1450
Alexandria, VA 22313-1450
www.uspto.gov

CANTOR COLBURN LLP
55 GRIFFIN ROAD SOUTH
BLOOMFIELD CT 06002

COPY MAILED

JUN 26 2007

OFFICE OF PETITIONS

In re Application of	:	
Cancian, et al.	:	
Application No. 10/415,530	:	ON PETITION
Filed: April 29, 2003	:	
Attorney Docket No. GRP-0039		

This is in response to the petition to withdraw the holding of abandonment under 37 CFR 1.181, filed April 20, 2007.

The petition under 37 CFR 1.181 is **GRANTED**.

The holding of abandonment is **WITHDRAWN**.

The above-identified application became abandoned for failure to timely file a reply in response to the Election/Restriction Requirement mailed July 5, 2005. This Office action did not set a period for reply for response; however, it did indicate that in no event may a reply be timely filed after six months. No reply was filed. The Office mailed a Notice of Abandonment on January 25, 2006.

A review of the July 5, 2005 Office action reveals that not only did it not set a period for reply, but that a page was missing from the Office action (Page 3). In view thereof, the holding of abandonment is withdrawn.

The matter is being forwarded to Group Art Unit 1732 for re-mailing of the July 5, 2005 Office action, this time including all of the pages (including Page 3), and setting a new period for response.

Telephone inquiries related to this decision should be directed to the undersigned at (571)272-3207.

Cliff Congo
Petitions Attorney
Office of Petitions

UNITED STATES PATENT AND TRADEMARK OFFICE

Commissioner for Patents
United States Patent and Trademark Office
P.O. Box 1450
Alexandria, VA 22313-1450
www.uspto.gov

CANTOR COLBURN LLP
55 GRIFFIN ROAD SOUTH
BLOOMFIELD CT 06002

COPY MAILED

SEP 2 4 2007

OFFICE OF PETITIONS

In re Application of	:
Cancian, et al.	: CORRECTED DECISION
Application No. 10/415,530	: VACATING DECISION OF
Filed: April 29, 2003	: JUNE 26, 2007
Attorney Docket No. GRP-0039	

This is a corrected decision, in response to the petition to withdraw the holding of abandonment under 37 CFR 1.181, filed April 20, 2007.

The petition under 37 CFR 1.181 is **DISMISSED**.

The decision mailed June 26, 2007 is **VACATED**

The above-identified application became abandoned for failure to timely file a reply in response to the Election/Restriction Requirement mailed July 5, 2005. This Office action did not set a shortened period for reply for response; however, it did indicate that in no event may a reply be timely filed after six months. No reply was filed. The Office mailed a Notice of Abandonment on January 25, 2006. Applicants filed a petition to withdraw the holding of abandonment on April 20, 2007. The decision was granted in a decision mailed on June 26, 2007.

In addition to failing to set a period for reply, the July 5, 2005 Office action was missing a page - page 3. Accordingly,

Applicants contacted the Examiner, and on July 26, 2005, the Examiner transmitted via facsimile a copy of page 3 of the Office action. In view thereof, Applicants had what was needed to make a complete reply to the July 5, 2005 Office action. However, Applicants state that it was their "understanding" that a new Office action would be mailed, setting a new period for reply. Nothing in the record supports this understanding.[1] Applicants failed to file a reply, and as such the application became abandoned by operation of law on January 6, 2006. The Notice of Abandonment was mailed on January 25, 2006.

Not only have Applicants not provided a sufficient showing as to why no reply was filed after they received page 3 on July 26, 2005, Applicants have not provided a sufficient showing as to why they did not timely file the instant petition to withdraw the holding of abandonment. 37 CFR 1.181(f) states that any petition under §1.181 not filed within two months of the action or notice from which relief is requested may be dismissed as untimely. Applicants did not file the instant petition until nearly 15 months after the mailing of the Notice of Abandonment.

While the showing of record is not sufficient to merit withdrawing the holding of abandonment, petitioner is not precluded from obtaining relief by filing a petition pursuant to 37 CFR 1.137(b) on the basis of unintentional delay. A grantable petition pursuant to 37 CFR 1.137(b) must be accompanied by (1) The reply required to the outstanding Office action or notice, unless previously filed; (2) The petition fee as set forth in 37 CFR 1.17(m); and (3) A statement that the entire delay in filing the required reply from the due date for the reply until the filing of a grantable petition pursuant to this paragraph was unintentional.

Further correspondence with respect to this matter should be addressed as follows:

By mail: Mail Stop Petitions
Commissioner for Patents
P.O. Box 1450
Alexandria VA 22313-1450

By FAX: (571) 273-8300
Attn: Office of Petitions

---

[1] The action of the Patent and Trademark Office will be based exclusively on the written record in the Office. 37 CFR 1.2.

Telephone inquiries related to this decision should be directed to the undersigned at (571)272-3207.

Cliff Congo
Petitions Attorney
Office of Petitions

30 SEP 20

UNITED STATES PATENT AND TRADEMARK OFFICE

COMMISSIONER FOR PATENTS
UNITED STATES PATENT AND TRADEMARK OFFICE
P.O. BOX 1450
ALEXANDRIA, VA 22313-1450
www.uspto.gov

Kilpatrick Stockton LLP
1100 Peachtree Street
Suite 2800
Atlanta, GA 30309-4530

In re Application of	:	
Ion Muirhead Williams	:	
Application Serial No.: 10/415,534	:	
PCT No.: PCT/IB01/01786	:	DECISION ON PETITION UNDER
Intl. Filing Date: 28 September 2001	:	
Priority Date: 29 September 2000	:	37 CFR 1.137(b)
Attorney's Docket No.: 45669-285656	:	
For: A FORMER FOR A REINFORCED	:	
CONCRETE SLAB	:	

This decision is in response to applicants' "PETITION UNDER 37 CFR 1.137(b) FOR REVIVAL OF AN APPLICATION UNINTENTIONALLY ABANDONED FOR FAILURE TO PROSECUTE", filed 30 April 2003.

BACKGROUND

On 28 September 2001, applicants filed International Application PCT/IB01/01786 which claimed priority to an earlier application filed on 29 September 2001. Accordingly, pursuant to 37 CFR 1.495, the thirty month period for paying the basic national fee expired at midnight 29 March 2003.

A copy of the international application was communicated to the United States Patent and Trademark Office from the International Bureau, however; applicants did not timely submit the basic national fee. Accordingly, the application became abandoned on 30 March 2003.

The instant petition was filed on 30 April 2003, and was accompanied by the petition fee, a "Transmittal Letter to the United States Designated/Elected Office (DO/EO/US) Concerning a Filing under

35 USC 371", a preliminary amendment, and a "Information Disclosure Statement".

DISCUSSION

Under 37 CFR 1.137(b), a petition requesting that the application be revived on the grounds of unintentional delay must be filed promptly after applicant becomes aware of the abandonment and must be accompanied by: (1) the required reply, unless previously filed, (2) the petition fee required by law, (3) a statement that the entire delay in filing the required reply from the due date of the reply until the filing of a grantable petition was unintentional and (4) a terminal disclaimer (for applications filed before 8 June 1995).

As to item (1), the petition is accompanied by the required reply in the form of a check for the basic national filing fee

As to item (2), the petition is accompanied by the required petition fee.

As to item (3), the petition is accompanied by applicants' statement that 'the entire delay in filing the required reply from the due date of the reply until the filing of a grantable petition was unintentional."

As to item (4), a terminal disclaimer is not required in the present case.

CONCLUSION

The petition under 37 CFR 1.137 (b) is **GRANTED**.

This application is being forwarded to the National Stage Processing Branch of the International Division to continue national stage processing of the present application, including preparation and mailing of the Notification of Missing Requirement Under 35 USC 371 requiring an oath or declaration as required by 35 USC 371(c)(4) and the surcharge for filing the oath or declaration later than thirty months from the priority date as required by 37 CFR 1.492(e).

Richard Cole
PCT Legal Examiner
PCT Legal Office

Kenya A. McLaughlin
PCT Legal Office Detailee
PCT Legal Office

Telephone: (703) 305-0010
Facsimile: (703) 308-6459

31 OCT 2003

UNITED STATES PATENT AND TRADEMARK OFFICE

COMMISSIONER FOR PATENTS
UNITED STATES PATENT AND TRADEMARK OFFICE
P.O. BOX 1450
ALEXANDRIA, VA 22313-1450
www.uspto.gov

Brian Kinnear
HOLLAND & HART
555 17th Street, Suite 3200
Denver, CO 80201

In re Application of :
ROBIN, Olivier :
U.S. Application No.: 10/415,545 :
PCT No.: PCT/SE01/02829 :
Int. Filing Date: 19 December 2001 : **DECISION**
Priority Date: 20 December 2000 :
Attorney's Docket No.: Allgon.83001.USO :
For: ANTENNA DEVICE AND METHOD OF :
ADJUSTING SAID DEVICE :

This decision is in response to the "Petition Under 37 C.F.R. §1.47(b) . . . " ("Pet.") submitted on 17 September 2003.

BACKGROUND

On 30 July 2003, the United States Designated/Elected Office (DO/EO/US) mailed a Notification of Missing Requirements under 35 U.S.C. 371 (Form PCT/DO/EO/905) indicating that an oath or declaration in compliance with 37 CFR 1.497(a) and (b) was required. Petitioner was given two-months to respond with extensions of time available pursuant to 37 CFR 1.136(a).

On 17 September 2003, the 37 CFR 1.47(b) applicant submitted the instant petition which was accompanied by, *inter alia*, authorization to charge any required fees to Deposit Account No. 08-2623; a copy of an "Assignment" dated 23 January 2001; a copy of a letter dated 10 June 2003 and accompanying envelope sent to the last known address of the sole inventor; a statement under 37 CFR 3.73(b); and a copy of a Swedish "Certificate of Registration" for AMC Centurion AB.

DISCUSSION

In response to the Form PCT/DO/EO/905 mailed 30 July 2003, the 37 CFR 1.47(b) applicant claims that Mr. Olivier Robin "cannot be located, " and that they have "made a diligent effort to obtain Mr. Robin's signature." Pet. at ¶ 1.

A petition under 37 CFR 1.47(b) must be accompanied by (1) the requisite petition fee, (2) factual proof that the inventor cannot be reached after diligent effort, (3) a statement of the last known address of the inventor, (4) an oath or declaration by the 37 CFR 1.47(b) applicant on behalf of and as agent for the non-signing inventor, (5) proof that the 37 CFR 1.47(b) applicant has sufficient proprietary interest in the

application, and (6) a showing that such action is necessary to preserve the rights of the parties or to prevent irreparable damage.

The appropriate petition fee has been charged to Deposit Account No. 08-2623 as authorized. The last known address of Olivier Robin is listed in the petition as:

Gun Herbert
Strandavägen
54, S-184 51,
Österkär, Sweden

With regard to item (6), section 409.03(g) of the Manual of Patent Examining Procedure (MPEP) states that "[i]rreparable damage may be established by a showing (a statement) that a filing date is necessary to preserve the rights of the party or to prevent irreparable damage." The 37 CFR 1.47(b) applicant declares that "[b]ecause the deadline to file a response to the Notification of Missing Requirements expires on, September 30, 2003, it is respectfully submitted that Mr. Olivier Robin's signature be waived. Id. at #6. This statement is sufficient to meet the requirements of the MPEP.

Therefore, items (1), (3) and (6) of 37 CFR 1.47(b) are satisfied.

Concerning item (2), the 37 CFR 1.47(b) applicant claims that Mr. Robin was "forwarded an Assignment and Combined Declaration and Power of Attorney" using "registered mail. Mr. Oliver [*sic*] did not claim these documents." Id. at # 3. A copy of the envelope and cover letter were included in the petition. The petitioner has not presented any further evidence of any other attempts to contact Mr. Robin.

Applicant's burden in proving that an inventor cannot be located is explained in section 409.03(d) of the MPEP which states, in part:

> Where inability to find or reach a nonsigning inventor 'after diligent effort' is the reason for filing under 37 CFR 1.47, an affidavit or declaration of the facts should be submitted that fully describes the exact facts which are relied on to establish that a diligent effort was made. . . .
>
> The affidavit or declaration of facts must be signed, where at all possible, by a person having firsthand knowledge of the facts recited therein. Statements based on hearsay will not normally be accepted. Copies of documentary evidence such as certified mail return receipt, cover letter of instructions, telegrams, etc., that support a finding that the nonsigning inventor could not be found or reached should be made part of the affidavit or declaration. It is important that the affidavit or declaration contain statements of fact as opposed to conclusions.

Here, a declaration of facts by a person having firsthand knowledge that fully describes the exact details which are relied on to establish that a diligent effort was made to reach the sole inventor was not submitted. While the documentary evidence filed concerning the registered delivery attempted on 10 June 2003 to the last known address of Mr. Robin is acceptable, one returned mailing does not meet the diligent effort standard. Moreover, there is no evidence that the 37 CFR 1.47(b) applicant attempted to contact Mr. Robin by telephone, e-mail, or even tried do a search for him using the internet. Furthermore, the 37 CFR 1.47(b) has not contacted his former co-workers to see if anyone knows where he moved to and how to contact him. These efforts are not extraordinary and should be attempted to demonstrate that a diligent effort was made. Copies of any searches and any other documentary evidence should be included in a renewed petition. Absent such a showing, item (2) of 37 CFR 1.47(b) is not satisfied

Regarding item (4), section 409.03(b) of the MPEP requires that a declaration signed by the 37 CFR 1.47(b) applicant must be provided. The 37 CFR 1.47(b) applicant has <u>not</u> provided such a declaration. As such, item (4) of 37 CFR 1.47(b) is also not satisfied.

Finally, section 409.03(f) of the MPEP discusses the proof required to show the requisite proprietary interest required by item (5) of 37 CFR 1.47(b) and states, in part:

> When an application is deposited pursuant to 37 CFR 1.47(b), the 37 CFR 1.47(b) applicant must prove that:
>
> (A) the invention has been assigned to the applicant, or
> (B) the inventor has agreed in writing to assign the invention to the applicant, or
> (C) the applicant otherwise has sufficient proprietary interest in the subject matter to justify the filing of the application. . . .

In the petition, the 37 CFR 1.47(b) applicant provided a copy of an assignment signed by the sole inventor. The assignment grants Allgon AB the "right to obtain a patent in Sweden" on Swedish patent application No. 0004723-3. However, it does not appear that any international rights were conveyed in this assignment. The 37 CFR 1.47(b) applicant must show that the sole inventor assigned all applicable rights including international rights in the above-captioned application.

Thus, item (5) of 37 CFR 1.47(b) is not satisfied.

If the 37 CFR 1.47(b) is unable to produce a satisfactory assignment or agreement to assign the above-captioned application, section 409.03(f) of the MPEP provides the 37 CFR 1.47(b) applicant another way to demonstrate sufficient proprietary interest in the above-captioned application and states:

> A proprietary interest obtained other than by assignment or agreement to assign may be demonstrated by an appropriate legal memorandum to the effect that a court of competent jurisdiction (federal, state, or foreign) would by the weight of authority in that jurisdiction award title of the invention to the 37 CFR 1.47(b) applicant. The facts in support of any conclusion that a court would award title to the 37 CFR 1.47(b) applicant should be made of record by way of an affidavit or declaration of the person having firsthand knowledge of same. **The legal memorandum should be prepared and signed by an attorney at law familiar with the law of the jurisdiction involved.** A copy (in the English language) of a statute (if other than the United States statute) or a court decision (if other than a reported decision of a federal court or a decision reported in the United States Patents Quarterly) relied on to demonstrate a proprietary interest should be made of record. (Emphasis added).

The 37 CFR 1.47(b) applicant failed to meet items (2), (4) and (5), thus, it is not appropriate to accept this application under 37 CFR 1.47(b) at this time.

CONCLUSION

The petition under 37 CFR 1.47(b) is **DISMISSED** without prejudice.

If reconsideration on the merits of this petition is desired, a proper response must be filed within **TWO (2) MONTHS** from the mail date of this decision. Extensions of time may be obtained under 37 CFR 1.136(a).

Any further correspondence with respect to this matter deposited with the United States Postal Service should be addressed to the Mail Stop PCT, Commissioner for Patents, Office of PCT Legal Administration, P.O. Box 1450, Alexandria, Virginia 22313-1450, with the contents of the letter marked to the attention of the Office of PCT Legal Administration.

James Thomson

James Thomson
Attorney Advisor
Office of PCT Legal Administration

Tel.: (703) 308-6457

DT20 Rec'd PCT/PTO 13 FEB 2004

Attorney Docket No. Allgon.830001.US0
Client Reference No. 48586.830001.US0
Express Mail Label No. EV269463670US #9

IN THE UNITED STATES PATENT AND TRADEMARK OFFICE

In re Patent Application of:	
Robin, Olivier	Examiner: not yet assigned
Serial No. 10/415,545	Art Unit: not yet assigned
Filed: April 29, 2003	
For: ANTENNA DEVICE AND METHOD OF ADJUSTING SAID ANTENNA DEVICE	

CERTIFICATE OF MAILING BY EXPRESS MAIL

Mail Stop PCT
Commissioner for Patents
Office of PCT Legal Administration
P.O. Box 1450
Alexandria, VA 22313

Sir:

The undersigned hereby certifies that the enclosed

1. Response to Decision;
2. Copy of Decision;
3. Combined Declaration and Power of Attorney;
4. Petition for a two-month extension of time;
5. Check in the amount of $420.00 for the extension of time;
6. Recordation Cover Sheet, Assignment and Check in the amount of $40.00;
7. Certificate of Mailing by Express Mail; and
8. Return Card,

relating to the above application, were deposited as "Express Mail," Mailing Label No. EV269463670US with the United States Postal Service, addressed to Mail Stop PCT; Commissioner for Patents, Office of PCT Legal Administration; P.O. Box 1450, Alexandria, VA 22313, on this February 13, 2004.

February 13, 2004 _____
Mailer

February 13, 2004 _____

Brian Kinnear, Reg. No. 43,717
555-17th Street, Suite 3200
Denver, Colorado 80201
Telephone: (303) 295-8170
Facsimile: (303) 295-8261

31 OCT 200

UNITED STATES PATENT AND TRADEMARK OFFICE

COMMISSIONER FOR PATENTS
UNITED STATES PATENT AND TRADEMARK OFFICE
P.O. BOX 1450
ALEXANDRIA, VA 22313-1450
www.uspto.gov

Brian Kinnear
HOLLAND & HART
555 17th Street, Suite 3200
Denver, CO 80201

RECEIVED
NOV 03 2003
Holland & Hart LLP

In re Application of
ROBIN, Olivier
U.S. Application No.: 10/415,545
PCT No.: PCT/SE01/02829
Int. Filing Date: 19 December 2001
Priority Date: 20 December 2000
Attorney's Docket No.: Allgon.83001.USO
For: ANTENNA DEVICE AND METHOD OF ADJUSTING SAID DEVICE

DECISION

This decision is in response to the "Petition Under 37 C.F.R. §1.47(b) . . . " ("Pet.") submitted on 17 September 2003.

BACKGROUND

On 30 July 2003, the United States Designated/Elected Office (DO/EO/US) mailed a Notification of Missing Requirements under 35 U.S.C. 371 (Form PCT/DO/EO/905) indicating that an oath or declaration in compliance with 37 CFR 1.497(a) and (b) was required. Petitioner was given two-months to respond with extensions of time available pursuant to 37 CFR 1.136(a).

On 17 September 2003, the 37 CFR 1.47(b) applicant submitted the instant petition which was accompanied by, *inter alia*, authorization to charge any required fees to Deposit Account No. 08-2623; a copy of an "Assignment" dated 23 January 2001; a copy of a letter dated 10 June 2003 and accompanying envelope sent to the last known address of the sole inventor; a statement under 37 CFR 3.73(b); and a copy of a Swedish "Certificate of Registration" for AMC Centurion AB.

DISCUSSION

In response to the Form PCT/DO/EO/905 mailed 30 July 2003, the 37 CFR 1.47(b) applicant claims that Mr. Olivier Robin "cannot be located, " and that they have "made a diligent effort to obtain Mr. Robin's signature." Pet. at ¶ 1.

A petition under 37 CFR 1.47(b) must be accompanied by (1) the requisite petition fee, (2) factual proof that the inventor cannot be reached after diligent effort, (3) a statement of the last known address of the inventor, (4) an oath or declaration by the 37 CFR 1.47(b) applicant on behalf of and as agent for the non-signing inventor, (5) proof that the 37 CFR 1.47(b) applicant has sufficient proprietary interest in the

Mail Ledger	11-5-03
Docketed	MC
Due Date	12-31-03

application, and (6) a showing that such action is necessary to preserve the rights of the parties or to prevent irreparable damage.

The appropriate petition fee has been charged to Deposit Account No. 08-2623 as authorized. The last known address of Olivier Robin is listed in the petition as:

Gun Herbert
Strandavägen
54, S-184 51,
Österkär, Sweden

With regard to item (6), section 409.03(g) of the Manual of Patent Examining Procedure (MPEP) states that "[i]rreparable damage may be established by a showing (a statement) that a filing date is necessary to preserve the rights of the party or to prevent irreparable damage." The 37 CFR 1.47(b) applicant declares that "[b]ecause the deadline to file a response to the Notification of Missing Requirements expires on, September 30, 2003, it is respectfully submitted that Mr. Olivier Robin's signature be waived. Id. at #6. This statement is sufficient to meet the requirements of the MPEP.

Therefore, items (1), (3) and (6) of 37 CFR 1.47(b) are satisfied.

Concerning item (2), the 37 CFR 1.47(b) applicant claims that Mr. Robin was "forwarded an Assignment and Combined Declaration and Power of Attorney" using "registered mail. Mr. Oliver [*sic*] did not claim these documents." Id. at # 3. A copy of the envelope and cover letter were included in the petition. The petitioner has not presented any further evidence of any other attempts to contact Mr. Robin.

Applicant's burden in proving that an inventor cannot be located is explained in section 409.03(d) of the MPEP which states, in part:

> Where inability to find or reach a nonsigning inventor 'after diligent effort' is the reason for filing under 37 CFR 1.47, an affidavit or declaration of the facts should be submitted that fully describes the exact facts which are relied on to establish that a diligent effort was made. . . .
>
> The affidavit or declaration of facts must be signed, where at all possible, by a person having firsthand knowledge of the facts recited therein. Statements based on hearsay will not normally be accepted. Copies of documentary evidence such as certified mail return receipt, cover letter of instructions, telegrams, etc., that support a finding that the nonsigning inventor could not be found or reached should be made part of the affidavit or declaration. It is important that the affidavit or declaration contain statements of fact as opposed to conclusions.

Here, a declaration of facts by a person having firsthand knowledge that fully describes the exact details which are relied on to establish that a diligent effort was made to reach the sole inventor was not submitted. While the documentary evidence filed concerning the registered delivery attempted on 10 June 2003 to the last known address of Mr. Robin is acceptable, one returned mailing does not meet the diligent effort standard. Moreover, there is no evidence that the 37 CFR 1.47(b) applicant attempted to contact Mr. Robin by telephone, e-mail, or even tried do a search for him using the internet. Furthermore, the 37 CFR 1.47(b) has not contacted his former co-workers to see if anyone knows where he moved to and how to contact him. These efforts are not extraordinary and should be attempted to demonstrate that a diligent effort was made. Copies of any searches and any other documentary evidence should be included in a renewed petition. Absent such a showing, item (2) of 37 CFR 1.47(b) is not satisfied

Regarding item (4), section 409.03(b) of the MPEP requires that a declaration signed by the 37 CFR 1.47(b) applicant must be provided. The 37 CFR 1.47(b) applicant has <u>not</u> provided such a declaration. As such, item (4) of 37 CFR 1.47(b) is also not satisfied.

Finally, section 409.03(f) of the MPEP discusses the proof required to show the requisite proprietary interest required by item (5) of 37 CFR 1.47(b) and states, in part:

> When an application is deposited pursuant to 37 CFR 1.47(b), the 37 CFR 1.47(b) applicant must prove that:
>
> (A) the invention has been assigned to the applicant, or
> (B) the inventor has agreed in writing to assign the invention to the applicant, or
> (C) the applicant otherwise has sufficient proprietary interest in the subject matter to justify the filing of the application. . . .

In the petition, the 37 CFR 1.47(b) applicant provided a copy of an assignment signed by the sole inventor. The assignment grants Allgon AB the "right to obtain a patent in Sweden" on Swedish patent application No. 0004723-3. However, it does not appear that any international rights were conveyed in this assignment. The 37 CFR 1.47(b) applicant must show that the sole inventor assigned all applicable rights including international rights in the above-captioned application.

Thus, item (5) of 37 CFR 1.47(b) is not satisfied.

If the 37 CFR 1.47(b) is unable to produce a satisfactory assignment or agreement to assign the above-captioned application, section 409.03(f) of the MPEP provides the 37 CFR 1.47(b) applicant another way to demonstrate sufficient proprietary interest in the above-captioned application and states:

> A proprietary interest obtained other than by assignment or agreement to assign may be demonstrated by an appropriate legal memorandum to the effect that a court of competent jurisdiction (federal, state, or foreign) would by the weight of authority in that jurisdiction award title of the invention to the 37 CFR 1.47(b) applicant. The facts in support of any conclusion that a court would award title to the 37 CFR 1.47(b) applicant should be made of record by way of an affidavit or declaration of the person having firsthand knowledge of same. **The legal memorandum should be prepared and signed by an attorney at law familiar with the law of the jurisdiction involved.** A copy (in the English language) of a statute (if other than the United States statute) or a court decision (if other than a reported decision of a federal court or a decision reported in the United States Patents Quarterly) relied on to demonstrate a proprietary interest should be made of record. (Emphasis added).

The 37 CFR 1.47(b) applicant failed to meet items (2), (4) and (5), thus, it is not appropriate to accept this application under 37 CFR 1.47(b) at this time.

CONCLUSION

The petition under 37 CFR 1.47(b) is **DISMISSED** without prejudice.

If reconsideration on the merits of this petition is desired, a proper response must be filed within **TWO (2) MONTHS** from the mail date of this decision. Extensions of time may be obtained under 37 CFR 1.136(a).

Any further correspondence with respect to this matter deposited with the United States Postal Service should be addressed to the Mail Stop PCT, Commissioner for Patents, Office of PCT Legal Administration, P.O. Box 1450, Alexandria, Virginia 22313-1450, with the contents of the letter marked to the attention of the Office of PCT Legal Administration.

James Thomson

James Thomson
Attorney Advisor
Office of PCT Legal Administration

Tel.: (703) 308-6457

Attorney Docket No. Allgon.830001.US0
Client Reference No. 48586.830001.US0
Express Mail Label No. EV269463670US

IN THE UNITED STATES PATENT AND TRADEMARK OFFICE

In re Patent Application of:	
Robin, Olivier	Examiner: not yet assigned
Serial No. 10/415,545	Art Unit: not yet assigned
Filed: April 29, 2003	
For: ANTENNA DEVICE AND METHOD OF ADJUSTING SAID ANTENNA DEVICE	

RESPONSE TO DECISION MAILED OCTOBER 31, 2003

Mail Stop PCT
Commissioner for Patents
Office of PCT Legal Administration
P.O. Box 1450
Alexandria, VA 22313

Sir:

In response to the Decision, mailed October 31, 2003, the period for which to respond extends until February 29, 2004, with a two-month extension of time. The applicant submits herewith an executed Declaration for Utility or Design Patent Application (37 CFR 1.63) along with a check in the amount of $420.00 for the two-month extension of time. Any fee deficiency may be charged to Deposit Account No. 08-2623.

Mr. Olivier Robin's current address is Route de Blaslay, F-86380 CHENECHE, France.

February 13, 2004

Brian Kinnear, Reg. No. 43,717
555-17th Street, Suite 3200
Denver, Colorado 80201
Telephone: (303) 295-8170
Facsimile: (303) 295-8261

10 MAY 2004

#7

UNITED STATES PATENT AND TRADEMARK OFFICE

COMMISSIONER FOR PATENTS
UNITED STATES PATENT AND TRADEMARK OFFICE
P.O. BOX 1450
ALEXANDRIA, VA 22313-1450
www.uspto.gov

Brian Kinnear
HOLLAND & HART
555 17th Street, Suite 3200
Denver, CO 80201

In re Application of :
ROBIN, Olivier :
U.S. Application No.: 10/415,545 :
PCT No.: PCT/SE01/02829 :
Int. Filing Date: 19 December 2001 : **DECISION**
Priority Date: 20 December 2000 :
Attorney's Docket No.: 48586.830001.USO :
For: ANTENNA DEVICE AND METHOD OF :
ADJUSTING SAID DEVICE :

This decision is in response to the papers filed via facsimile on 06 May 2004 and the papers filed 13 February 2004 which are treated as a renewed petition under 37 CFR 1.47(b).

BACKGROUND

On 31 October 2003, a decision dismissing applicant's petition under 37 CFR 1.47(b) was mailed. Applicant was given two-months to respond with extensions of time available under 37 CFR 1.136(a).

On 13 February 2004, applicant filed the instant renewed petition which was accompanied by, *inter alia*, a declaration executed by the sole inventor and a two-month extension and a $420.00 fee.

On 06 May 2004, applicants filed via facsimile a copy of the papers purportedly filed 13 February 2004 and a date stamped postcard receipt for the 13 February 2004 documents.

DISCUSSION

The papers filed 13 February 2004 have been matched with the above-captioned case. No further analysis is required.

The 37 CFR 1.47(b) has submitted a declaration executed by the sole inventor which is in compliance with 37 CFR 1.497(a) and (b). A two-month extension fee of $420.00 was paid.

No further response is required.

DECISION

Since the nonsigning sole inventor has executed a declaration in the above-captioned application, the petition filed under 37 CFR 1.47(b) is dismissed as **MOOT**.

Applicant has completed the requirements for acceptance under 35 U.S.C. 371(c). The application has an international filing date of 19 December 2001, under 35 U.S.C. 363, and a 35 U.S.C. 371(c)(1), (c)(2) and (c)(4) date of 13 February 2004.

This application is being forwarded to the National Stage Processing Division of the Office of PCT Operations for continued processing.

James Thomson

James Thomson
Attorney Advisor
Office of PCT Legal Administration

Tel.: (703) 308-6457

UNITED STATES PATENT AND TRADEMARK OFFICE

COMMISSIONER FOR PATENTS
UNITED STATES PATENT AND TRADEMARK OFFICE
P.O. BOX 1450
ALEXANDRIA, VA 22313-1450
WWW.USPTO.GOV

Paper No. None

Robert Brouillette
BROUILLETT KOSIE PRINCE
25th Floor
1100 Rene-Levesque Boulevard West
Montreal QC H3B 5C9 CA CANADA

COPY MAILED

AUG 0 5 2005

OFFICE OF PETITIONS

In re Application of :
Gilles Soucy et al. :
Application No. 10/415,557 :
Filed: April 15, 2003 :
Attorney Docket Number: 04104-015-US-02 :
Title: ENDLESS TRACK FOR A VEHICLE :

DECISION ON PETITION
UNDER 37 C.F.R. §1.137(b)

This is a decision on the petition filed April 8, 2005, pursuant to 37 C.F.R. §1.137(b)[1], to revive the above-identified application.

The above-identified application became abandoned for failure to reply in a timely manner to the non-final Office action, mailed July 12, 2004, which set a shortened statutory period for reply of three (3) months. No response was received, and no extensions of time under the provisions of 37 C.F.R. §1.136(a) were requested. Accordingly, the above-identified application became abandoned on October 13, 2004. A Notice of Abandonment was mailed March 11, 2005.

37 C.F.R. §1.137(b)(3) requires a statement that the entire delay in filing the required reply from the due date for the reply until the filing of a grantable petition pursuant to 37 C.F.R. §1.137(b) was unintentional. Since the statement contained in the instant petition varies from the language required by 37 C.F.R. §1.137(b)(3), the statement contained in the instant petition is being

1 A grantable petition pursuant to 37 CFR 1.137(b) must be accompanied by:
(1) The reply required to the outstanding Office action or notice, unless previously filed;
(2) The petition fee as set forth in § 1.17(m);
(3) A statement that the entire delay in filing the required reply from the due date for the reply until the filing of a grantable petition pursuant to this paragraph was unintentional. The Commissioner may require additional information where there is a question whether the delay was unintentional, and;
(4) Any terminal disclaimer (and fee as set forth in § 1.20(d)) required pursuant to paragraph (d) of this section.

construed as the statement required by 37 C.F.R. §1.137(b)(3) and petitioner must notify the Office if this is not a correct interpretation of the statement contained in the instant petition.

With the instant petition, Petitioner has filed the petition fee and has made a statement which is being construed as the proper statement of unintentional delay. Petitioner has met requirements (2) and (3) above. The fourth requirement does not apply.

Regarding the first requirement, the requirement has not been satisfied because Petitioner did not submit the required reply to the Office action. The required reply is the reply sufficient to have avoided abandonment, had such reply been timely filed[2]. In order for the application to be revived, petitioner must submit a reply which satisfies 37 C.F.R. §1.137(b)(1) (i.e., either an amendment or a response to the non-final communication of July 12, 2004, or the filing of a continuing application). Although the petition sets forth that a reply was included with the submission, a copy of the same has not been located in the electronic file.

As such, the petition must be **DISMISSED**.

Any reply must be submitted within **TWO (2) MONTHS** from the mail date of this decision. Extensions of time under 37 C.F.R. §1.136(a) are permitted. The reply should include a cover letter entitled "Renewed Petition Under 37 C.F.R. 1.137(b)". This is not a final agency action within the meaning of 5 U.S.C 704.

The renewed petition should indicate in a prominent manner that the attorney handling this matter is Paul Shanoski.

Any renewed petition may be submitted by mail[3], hand-delivery[4], or facsimile[5].

Telephone inquiries regarding *this decision* should be directed to the undersigned at (571) 272-3225. All other inquiries concerning examination procedures or status of the application should be directed to the Technology Center.

Paul Shanoski
Senior Attorney
Office of Petitions
United States Patent and Trademark Office

2 See M.P.E.P. 711.03(c).

3 Mail Stop Petition, Commissioner for Patents, United States Patent and Trademark Office, P.O. Box 1450, Alexandria, VA, 22313-1450.

4 Customer Window, Randolph Building, 401 Dulaney Street, Alexandria, VA, 22314.

5 (703) 872-9306 - please note this is a central facsimile number. On July 15, 2005, the Central FAX Number changed to 571-273-8300. To give customers time to adjust to the new Central FAX Number, faxes sent to the old number (703-872-9306) will be routed to the new number until September 15, 2005.

UNITED STATES PATENT AND TRADEMARK OFFICE

Commissioner for Patents
United States Patent and Trademark Office
P.O. Box 1450
Alexandria, VA 22313-1450
www.uspto.gov

CARLSON, GASKEY & OLDS, P.C.
400 WEST MAPLE ROAD
SUITE 350
BIRMINGHAM, MI 48009

COPY MAILED

JAN 2 5 2006

OFFICE OF PETITIONS
ON PETITION

In re Application of :
Correia, et al. :
Application No. 10/415,572 :
Filed: April 30, 2003 :
Attorney Docket No. 60,130-1745;00MRA0012 :

This is a decision on the petition under 37 CFR 1.181, filed October 21, 2005, to withdraw the holding of abandonment. The petition was recently forwarded to this office for review.

The petition is **GRANTED**.

This application became abandoned for failure to timely file a proper reply to the non-final Office action mailed January 6, 2005. Accordingly, this application became abandoned on April 7, 2005. A Notice of Abandonment was mailed on July 14, 2005.

Petitioner asserts the Office action was never received and that the Office mailed the action to the wrong address. A review of the application file indicates that the Office action was mailed to an incorrect address. The Office sincerely apologizes for this error.

Accordingly, the petition is granted and the holding of abandonment is withdrawn.

This application is being forwarded to Technology Center 3600, for review of the amendment filed October 21, 2005, *in due course*.

Telephone inquiries concerning this matter may be directed to the undersigned at (571) 272-3228.

Edward J. Tannouse
Petitions Attorney
Office of Petitions
Office of the Deputy Commissioner
for Patent Examination Policy

UNITED STATES PATENT AND TRADEMARK OFFICE

Commissioner for Patents
United States Patent and Trademark Office
P.O. Box 1450
Alexandria, VA 22313-1450
www.uspto.gov

MORGAN, LEWIS & BROKIUS, LLP
ONE MARKET SPEAR
STREET TOWER
SAN FRANCISCO, CA 94105

COPY MAILED

DEC 17 2007

OFFICE OF PETITIONS
ON PETITION

In re Application of
Christopher Liddle et. al
Application No. 10/415,607
Filed: November 20, 2003
Attorney Docket No. 67718-5007-US

This is a decision on the petition under 37 CFR 1.137(b)[1], filed October 5, 2007, to revive the above-identified application.

The petition is **GRANTED**.

This application became abandoned for failure to timely reply to the Final Office Action mailed February 9, 2007. A response was filed May 11, 2007 with a one month extension of time request, but by Advisory Action of June 4, 2007, petitioner was advised that the response did not place the application in condition for allowance. Accordingly, a Notice of Abandonment was mailed October 5, 2007.

Petitioner has submitted a Request for Continued Examination (RCE) and an amendment as the submission required under 37 CFR 1.114.

This matter is being referred to Technology Center 1632 for processing of the RCE.

Telephone inquiries related to this decision should be directed to the undersigned Petitions Attorney at (571) 272-3212.

Patricia Faison-Ball

Patricia Faison-Ball
Senior Petitions Attorney
Office of Petitions

---

[1]Effective December 1, 1997, the provisions of 37 CFR 1.137(b) now provide that where the delay in reply was unintentional, a petition may be filed to revive an abandoned application or a lapsed patent pursuant to 37 CFR 1.137(b). A grantable petition filed under the provisions of 37 CFR 1.137(b) must be accompanied by:

(1) the required reply, unless previously filed. In a nonprovisional application abandoned for failure to prosecute, the required reply may be met by the filing of a continuing application. In an application or patent, abandoned or lapsed for failure to pay the issue fee or any portion thereof, the required reply must be the payment of the issue fee or any outstanding balance thereof.

(2) the petition fee as set forth in 37 CFR 1.17(m);

(3) a statement that the entire delay in filing the required reply from the due date for the reply until the filing of a grantable petition pursuant to 37 CFR 1.137(b) was unintentional. The Commissioner may required additional information where there is a question whether the delay was unintentional; and

(4) any terminal disclaimer (and fee as set forth in 37 CFR 1.20(d)) required pursuant to 37 CFR 1.137(c)).

UNITED STATES PATENT AND TRADEMARK OFFICE

COMMISSIONER FOR PATENTS
UNITED STATES PATENT AND TRADEMARK OFFICE
P.O. BOX 1450
ALEXANDRIA, VA 22313-1450
www.uspto.gov

08 SEP 2003

Karin H. Butchko
Carlson Gaskey & Olds, PC
400 W. Maple, Suite 350
Birmingham, MI 48009

In re Application of	:	
CHAN, David, et al.	:	
Application No.: 10/415,610	:	DECISION
PCT No.: PCT/GB01/03894	:	
Int. Filing Date: 13 August 2001	:	ON PETITION UNDER
Priority Date: 05 September 2000	:	
Docket No.: 60,130-1738	:	37 CFR 1.137(b)
For: CONNECTION BETWEEN VEHICLE	:	
AXLE AND SUSPENSION ARM	:	

Applicant's "Petition For Revival of an International Application For Patent Designating the U.S. Abandoned Unintentionally Under 37 CFR 1.137(b)," filed in the above-captioned application on 30 April 2003 is **GRANTED**.

Applicant states "the entire delay in filing the required reply from the due date for the required reply until the filing of a grantable petition under 37 CFR 1.137(b) was unintentional," as required by 37 CFR 1.137(b)(3). The appropriate national fee and petition fee have been submitted. A terminal disclaimer is not required as the application was filed on or after 08 June 1995. Accordingly, all requirements under 37 CFR 1.137(b) have been satisfied.

A signed oath or declaration has not yet been submitted.

This application is being forwarded to the National Stage Processing Branch of the Office of PCT Operations for continued processing in accordance with this decision, including the mailing of a Notification of Missing Requirements (Form PCT/DO/EO/905) indicating that an oath or declaration in compliance with 37 CFR 1.497(a)-(b) and the surcharge for late filing of the oath or declaration are required.

Erin M. Pender

Erin M. Pender
Attorney Advisor
PCT Legal Administration

Telephone: (703) 305-0455
Facsimile: (703) 308-6459

30 SEP 2003

UNITED STATES PATENT AND TRADEMARK OFFICE

Commissioner for Patents
United States Patent and Trademark Office
PO Box 1450
Alexandria, VA 22313-1450
www.uspto.gov

Karin H. Butchko
Carlson, Gaskey & Olds, P.C.
400 W. Maple, Suite 350
Birmingham, MI 48009

In re Application of	:	
Hughes	:	
US Application No.: 10/415,611	:	**DECISION ON**
PCT Application No.: PCT/GB01/03908	:	**PETITION FOR REVIVAL**
International Filing Date: 31 August 2001	:	**UNDER 37 CFR 1.137(b)**
Priority Date: 05 September 2000	:	
Attorney's Docket No.: 60,130-1739	:	
For: PIVOT BEARING	:	

The petition to revive under 37 CFR 1.137(b), filed on 30 April 2003 in the above-captioned application, is hereby **GRANTED** as follows.

BACKGROUND

On 31 August 2001, Applicant filed international application PCT/GB01/03908, which claimed priority of an earlier application filed on 05 September 2000. A copy of the international application was communicated from the International Bureau to the USPTO on 14 March 2002. The period for paying the basic national fee is 30 months and ended at midnight on 05 March 2003. The basic national fee was not paid on or before 05 March 2003. The international application became abandoned as to the United States on 06 March 2003.

The instant petition encloses, *inter alia*,

(1) A transmittal letter for entry into the national stage in the United States (Form PTO-1390), along with a $908 check to pay for the $900 basic national fee required by 35 U.S.C. 371(c)(1) and 37 CFR 1.495(a)(5);

(2) The $1,300 petition fee;

(3) A statement to the effect that the entire delay in filing the basic national fee from its due date until the filing of the instant petition under 37 CFR 1.137(b) was unintentional.

Moreover, a terminal disclaimer is not applicable in the instant case.

CONCLUSION

In view of the above, the request to revive the application abandoned under 35 U.S.C. 371(d) is granted as to the national stage in the United States of America.

A review of the declaration submitted with the petition reveals that it complies with 37 CFR 1.497(a) and (b). Applicant has met the requirements of 37 CFR 1.495 for acceptance into the national stage under 35 U.S.C. 371(c). Consequently, the application has an international filing date of 31 August 2001, and a 35 U.S.C. 371 date of 30 April 2003.

Finally, the Office notes that the Form PTO-1390 intended to allocate $890 of the $908 check payment to the basic national fee, and $18 to the extra claim fee. Subtracting the $900 required for the basic national fee from the $908 payment leaves a $8 balance. On 12 September 2003, by facsimile, Counsel authorized the Office to charge the $10 deficiency for filing the extra claim to Deposit Account No. 50-1482.

The application is being returned to the National Stage Processing Division of the Office of PCT Operations for continued processing.

Boris Milef
PCT Legal Examiner
PCT Legal Office

RC Tang
Petitions Attorney
PCT Legal Office
Telephone: 703-308-1315
Facsimile: 703-308-6459

UNITED STATES PATENT AND TRADEMARK OFFICE

Commissioner for Patents
United States Patent and Trademark Office
P.O. Box 1450
Alexandria, VA 22313-1450
www.uspto.gov

GERLINDE M NATTLER
CONTINENTAL TEVES INC
ONE CONTINENTAL DRIVE
AUBURN HILLS, MI 48326

COPY MAILED

MAR 2 3 2005

OFFICE OF PETITIONS

In re Application of	:	
Peter Wanke et al	:	
Application No. 10/415,618	:	ON PETITION
Filed: October 17, 2003	:	
Attorney Docket No. AP9968	:	

This is a decision on the petition under 37 CFR 1.137(b), filed March 8, 2005, to revive the above-identified application.

The petition is **GRANTED**.

The above-identified application became abandoned for failure to submit the issue fee and publication fee in a timely manner in reply to the Notice of Allowance mailed October 5, 2004, which set a statutory period for reply of three (3) months. Accordingly, the above-identified application became abandoned on January 6, 2005.

There is no indication that petitioner has submitted an Issue Fee Transmittal Form (PTOL-85b). Accordingly, if petitioner desires to have the information normally found thereon printed on the patent, the attached blank Issue Fee Transmittal Form should be completed and returned to the Publishing Division within **ONE MONTH** from the mail date of this decision.

Pursuant to petitioner's authorization, Deposit Account No. 50-2570 was charged a total of $3,200.00 -- $1,500.00 for the petition to revive an unintentionally abandoned application, $1,400.00 for the issue fee and $300.00 for the publication fee.

Telephone inquiries concerning this decision should be directed to Wan Laymon at (571) 272-3220.

This matter is being referred to Publishing Division.

Wan Laymon
Wan Laymon
Petitions Examiner
Office of Petitions
Office of the Deputy Commissioner
for Patent Examination Policy

Attachment: PTOL-85(b)

UNITED STATES PATENT AND TRADEMARK OFFICE

COMMISSIONER FOR PATENTS
UNITED STATES PATENT AND TRADEMARK OFFICE
P.O. BOX 1450
ALEXANDRIA, VA 22313-1450
www.uspto.gov

KATTEN MUCHIN ROSENMAN LLP
575 MADISON AVENUE
NEW YORK, NY 10022-2585

COPY MAILED

FEB 0 2 2007

OFFICE OF PETITIONS

In re Application of	:	
Gabriele Mazzarolo	:	
Application No.: 10/415,624	:	ON PETITION
Filed: April 29, 2003	:	
Attorney Docket No. SAIC 20.366	:	

This is a decision on the petition under 37 CFR 1.182, filed July 19, 2006, to correct the spelling of the inventor's name by way of a Certificate of Correction.

The petition is **granted**.

USPTO records will be corrected as follows:

> The inventor's name will be changed from "Gabriele Mazzarolo"
> to "Giovanni Mazzarolo"

The file is being referred to Certificates of Correction Branch for issuance of the requested Certificate of Correction. A corrected Filing Receipt is enclosed.

Telephone inquiries concerning this decision may be directed to the undersigned at (571) 272-3204. Any questions relating to the issuance of the Certificate of Correction should be directed to Certificates of Correction Branch at (571) 272-4200.

Sherry D. Brinkley
Petitions Examiner
Office of Petitions

Enclosure: Corrected Filing Receipt

UNITED STATES PATENT AND TRADEMARK OFFICE

UNITED STATES DEPARTMENT OF COMMERCE
United States Patent and Trademark Office
Address: COMMISSIONER FOR PATENTS
P.O. Box 1450
Alexandria, Virginia 22313-1450
www.uspto.gov

APPL NO.	FILING OR 371 (c) DATE	ART UNIT	FIL FEE REC'D	ATTY.DOCKET NO	DRAWINGS	TOT CLMS	IND CLMS
10/415,624	04/29/2003	3765	1200	SAIC 20.366	2	5	1

CONFIRMATION NO. 8782
CORRECTED FILING RECEIPT
OC000000022272912
OC000000022272912

26304
KATTEN MUCHIN ROSENMAN LLP
575 MADISON AVENUE
NEW YORK, NY 10022-2585

Date Mailed: 02/01/2007

Receipt is acknowledged of this regular Patent Application. It will be considered in its order and you will be notified as to the results of the examination. Be sure to provide the U.S. APPLICATION NUMBER, FILING DATE, NAME OF APPLICANT, and TITLE OF INVENTION when inquiring about this application. Fees transmitted by check or draft are subject to collection. Please verify the accuracy of the data presented on this receipt. **If an error is noted on this Filing Receipt, please mail to the Commissioner for Patents P.O. Box 1450 Alexandria Va 22313-1450. Please provide a copy of this Filing Receipt with the changes noted thereon. If you received a "Notice to File Missing Parts" for this application, please submit any corrections to this Filing Receipt with your reply to the Notice. When the USPTO processes the reply to the Notice, the USPTO will generate another Filing Receipt incorporating the requested corrections (if appropriate).**

Applicant(s)

Giovanni Mazzarolo, Coste di Maser, ITALY;

Power of Attorney:

Harris Wolin--39432

Domestic Priority data as claimed by applicant

This application is a 371 of PCT/EP02/08462 07/30/2002

Foreign Applications

ITALY TV2001U000046 08/10/2001

If Required, Foreign Filing License Granted: 01/31/2007

The country code and number of your priority application, to be used for filing abroad under the Paris Convention, is
US10/415,624

Projected Publication Date: Not Applicable

Non-Publication Request: No

Early Publication Request: No

Title

GARMENT WITH PROTECTED DEFORMABLE INSERTS

Preliminary Class

002

PROTECTING YOUR INVENTION OUTSIDE THE UNITED STATES

Since the rights granted by a U.S. patent extend only throughout the territory of the United States and have no effect in a foreign country, an inventor who wishes patent protection in another country must apply for a patent in a specific country or in regional patent offices. Applicants may wish to consider the filing of an international application under the Patent Cooperation Treaty (PCT). An international (PCT) application generally has the same effect as a regular national patent application in each PCT-member country. The PCT process **simplifies** the filing of patent applications on the same invention in member countries, but **does not result** in a grant of "an international patent" and does not eliminate the need of applicants to file additional documents and fees in countries where patent protection is desired.

Almost every country has its own patent law, and a person desiring a patent in a particular country must make an application for patent in that country in accordance with its particular laws. Since the laws of many countries differ in various respects from the patent law of the United States, applicants are advised to seek guidance from specific foreign countries to ensure that patent rights are not lost prematurely.

Applicants also are advised that in the case of inventions made in the United States, the Director of the USPTO must issue a license before applicants can apply for a patent in a foreign country. The filing of a U.S. patent application serves as a request for a foreign filing license. The application's filing receipt contains further information and guidance as to the status of applicant's license for foreign filing.

Applicants may wish to consult the USPTO booklet, "General Information Concerning Patents" (specifically, the section entitled "Treaties and Foreign Patents") for more information on timeframes and deadlines for filing foreign patent applications. The guide is available either by contacting the USPTO Contact Center at 800-786-9199, or it can be viewed on the USPTO website at http://www.uspto.gov/web/offices/pac/doc/general/index.html.

For information on preventing theft of your intellectual property (patents, trademarks and copyrights), you may wish to consult the U.S. Government website, http://www.stopfakes.gov. Part of a Department of Commerce initiative, this website includes self-help "toolkits" giving innovators guidance on how to protect intellectual property in specific countries such as China, Korea and Mexico. For questions regarding patent enforcement issues, applicants may call the U.S. Government hotline at 1-866-999-HALT (1-866-999-4158).

LICENSE FOR FOREIGN FILING UNDER
Title 35, United States Code, Section 184
Title 37, Code of Federal Regulations, 5.11 & 5.15

GRANTED

The applicant has been granted a license under 35 U.S.C. 184, if the phrase "IF REQUIRED, FOREIGN FILING LICENSE GRANTED" followed by a date appears on this form. Such licenses are issued in all applications where the conditions for issuance of a license have been met, regardless of whether or not a license may be required as set forth in 37 CFR 5.15. The scope and limitations of this license are set forth in 37 CFR 5.15(a) unless an earlier license has been issued under 37 CFR 5.15 (b). The license is subject to revocation upon written notification. The date indicated is the effective date of the license, unless an earlier license of similar scope has been granted under 37 CFR 5.13 or 5.14.

This license is to be retained by the licensee and may be used at any time on or after the effective date thereof unless it is revoked. This license is automatically transferred to any related applications(s) filed under 37 CFR 1.53(d). This license is not retroactive.

The grant of a license does not in any way lessen the responsibility of a licensee for the security of the subject matter as imposed by any Government contract or the provisions of existing laws relating to espionage and the national security or the export of technical data. Licensees should apprise themselves of current regulations especially with respect to certain countries, of other agencies, particularly the Office of Defense Trade Controls, Department of State (with respect to Arms, Munitions and Implements of War (22 CFR 121-128)); the Bureau of Industry and Security, Department of Commerce (15 CFR parts 730-774); the Office of Foreign Assets Control, Department of Treasury (31 CFR Parts 500+) and the Department of Energy.

NOT GRANTED

No license under 35 U.S.C. 184 has been granted at this time, if the phrase "IF REQUIRED, FOREIGN FILING LICENSE GRANTED" DOES NOT appear on this form. Applicant may still petition for a license under 37 CFR 5.12, if a license is desired before the expiration of 6 months from the filing date of the application. If 6 months has lapsed from the filing date of this application and the licensee has not received any indication of a secrecy order under 35 U.S.C. 181, the licensee may foreign file the application pursuant to 37 CFR 5.15(b).

UNITED STATES PATENT AND TRADEMARK OFFICE

UNITED STATES DEPARTMENT OF COMMERCE
United States Patent and Trademark Office
Address: COMMISSIONER FOR PATENTS
P.O. Box 1450
Alexandria, Virginia 22313-1450
www.uspto.gov

APPLICATION NO.	FILING DATE	FIRST NAMED INVENTOR	ATTORNEY DOCKET NO.	CONFIRMATION NO.
10/415,634	05/01/2003	Michael De Jong	RAG-15002/08	9369

25006 7590 05/15/2006

GIFFORD, KRASS, GROH, SPRINKLE & CITKOWSKI, P.C
PO BOX 7021
TROY, MI 48007-7021

EXAMINER
RODRIGUEZ, RUTH C

ART UNIT	PAPER NUMBER
3677	

DATE MAILED: 05/15/2006

Please find below and/or attached an Office communication concerning this application or proceeding.

UNITED STATES PATENT AND TRADEMARK OFFICE

Commissioner for Patents
United States Patent and Trademark Office
P.O. Box 1450
Alexandria, VA 22313-1450
www.uspto.gov

Thomas E. Anderson
Gifford, Krass, Groh, Sprinkle,
Anderson & Citkowski, P.C.
P.O. Box 7021
Troy, M1 48007-702 1

In re application of	:
De Jong et al.	:
Application No.: 10/415634	:DECISION ON PETITION
Date of Filing: May 1, 2003	:FOR CORRECTION OF
Attorney Docket No.: RAG-15002/08	:INVENTORSHIP OF PATENT
For: WAVE ATTENUATOR	:

This is in response to applicant's Petition for Correction of Inventorship of Patent under 37 CFR 1.324 which was filed in the Patent and Trademark Office on May 1, 2003.

The petition is **GRANTED.**

The applicant has requested adding an inventor to the above-issued patent via the PTO issuing a certificate correcting the error. In accordance with 37 CFR 1.324, the applicant has submitted a petition, a statement by the unnamed inventor that the error occurred without deceptive intent, a statement by each named inventor that they do not disagree with the change of inventorship, a statement of consent of the assignee, and a fee of $130.00 as required under 37 CFR 1.20.

Telephone inquires relative to this decision should be directed to Supervisory Primary Examiner J.J. Swann at (703) 306-4115.

J.J. Swann, Supervisory Primary Examiner
Patent Technology Center 3600
(571) 272-7075
Facsimile No.: (571) 273-7075

27 OCT 2003

#8

UNITED STATES PATENT AND TRADEMARK OFFICE

COMMISSIONER FOR PATENTS
UNITED STATES PATENT AND TRADEMARK OFFICE
P.O. BOX 1450
ALEXANDRIA, VA 22313-1450
www.uspto.gov

Oblon, Spivak, McClelland, Maier & Neustadt, P.C.
1940 Duke Street
Alexandria, VA 22314

In re Application of SENGA et al	:	
U.S. Application No.: 10/415,658	:	
PCT Application No.: PCT/JP01/09766	:	DECISION
Int. Filing Date: 08 November 2001	:	
Priority Date Claimed: 08 November 2000	:	
Attorney Docket No.: 237428US3PCT	:	
For:	:	

This is in response to applicant's "Response to Notice of Defective Response" filed 07 October 2003.

BACKGROUND

On 08 November 2001, applicant filed international application PCT/JP01/09766, which claimed priority of an earlier Japan application filed 08 November 2000. A copy of the international application was communicated to the USPTO from the International Bureau on 16 May 2002. The thirty-month period for paying the basic national fee in the United States expired on 08 May 2003.

On 08 May 2003, applicant filed national stage papers in the United States Designated/Elected Office (DO/EO/US). The submission was accompanied by, *inter alia*, the basic national fee required by 35 U.S.C. 371(c)(1).

On 01 July 2003, the DO/EO/US mailed a Notification of Missing Requirements Under 35 U.S.C. 371 (Form PCT/DO/EO/905), which indicated that an oath or declaration in compliance with 37 CFR 1.497 must be filed.

On 02 September 2003, applicant filed an executed declaration.

On 09 September 2003, the DO/EO/US mailed a Notification of Defective Response (Form PCT/DO/EO/916), which indicated that the declaration filed 02 September 2003 is improper.

10/29/2003 SNAJARRO 00000002 150030 10415658

01 FC:1460 130.00 DA

On 07 October 2003, applicant filed the present response, which is being treated as a petition under 37 CFR 1.182.

DISCUSSION

The name of the third inventor is listed as Hiroyuki Inoue in the declaration and is listed as Hiroyuki Nakaba in the international application. The DO/EO/US has not received a Notification of the Recording of a Change (Form PCT/IB/306) which indicates that the requested name changes have been accepted for recording

MPEP 605.04(c) states in relevant part,

> In cases where an inventor's name has been changed after the application has been filed and the inventor desires to change his or her name on the application, he or she must submit a petition under 37 CFR 1.182. . . . The petition must include an appropriate petition fee and an affidavit signed with both names and setting forth the procedure whereby the change of name was effected, or a certified copy of the court order.

Applicant has filed a petition under 37 CFR 1.182 along with an affidavit signed with both names. The requisite petition fee will be charged to Deposit Account 15-0030 as authorized in the petition.

CONCLUSION

For the reasons above, the petition under 37 CFR 1.182 is GRANTED.

The application has an International Filing Date under 35 U.S.C. 363 of 08 November 2001, and a date under 35 U.S.C. 371(c) of 02 September 2003.

This application is being forwarded to the United States Designated/Elected Office (DO/EO/US) for further processing in accordance with this decision.

Please direct further correspondence with respect to this matter to Mail Stop PCT, Commissioner for Patents, Office of PCT Legal Administration, P.O. Box 1450, Alexandria, Virginia 22313-1450, with the contents of the letter marked to the attention of the Office of PCT Legal Administration.

Bryan Tung
PCT Legal Examiner
PCT Legal Office

Telephone: 703-308-6614
Facsimile: 703-308-6459

UNITED STATES PATENT AND TRADEMARK OFFICE

Commissioner for Patents
United States Patent and Trademark Office
P.O. Box 1450
Alexandria, VA 22313-1450
www.uspto.gov

9-24-07

WAK

In re Application of	:	
Venancio et al.	:	
Serial Number: 10/415,666	:	DECISION
Filed: May 1, 2003	:	ON
For: Sensor For Analysis Of Mixtures By Global Selectivity And Its Use In Sensor System	:	PETITION

This is in response to the request filed August 30, 2007, requesting reissue of the final office action of June 28, 2007 because the action was mailed to a former address of the attorney for Applicants.

A change of address was filed with the Patent Office on May 1, 2007.

The Petition is **Granted**.

The office action of June 28, 2007 will be remailed and the time period for response restarted.

Jacqueline M. Stone/lw

Jacqueline Stone, Director
Technology Center 1700
Chemical and Materials Engineering

S.Craig Hemenway
DORSEY & WHITNEY, LLP
INTELLECTUAL PROPERTY DEPARTMENT
370 SEVENTEENTH STREET
SUITE 4700
DENVER CO 80202-5647

TH

UNITED STATES PATENT AND TRADEMARK OFFICE

UNITED STATES DEPARTMENT OF COMMERCE
United States Patent and Trademark Office
Address: COMMISSIONER FOR PATENTS
P.O. Box 1450
Alexandria, Virginia 22313-1450
www.uspto.gov

APPLICATION NO.	FILING DATE	FIRST NAMED INVENTOR	ATTORNEY DOCKET NO.	CONFIRMATION NO.
10/415,673	09/11/2003	Ivan Collado Cano	X-14174	1115

25885 7590 08/07/2007
ELI LILLY & COMPANY
PATENT DIVISION
P.O. BOX 6288
INDIANAPOLIS, IN 46206-6288

EXAMINER
ANDERSON, REBECCA L

ART UNIT	PAPER NUMBER
1626	

NOTIFICATION DATE	DELIVERY MODE
08/07/2007	ELECTRONIC

Please find below and/or attached an Office communication concerning this application or proceeding.

The time period for reply, if any, is set in the attached communication.

Notice of the Office communication was sent electronically on above-indicated "Notification Date" to the following e-mail address(es):

patents@lilly.com

UNITED STATES
PATENT AND
TRADEMARK OFFICE

UNDER SECRETARY OF COMMERCE FOR INTELLECTUAL PROPERTY AND
DIRECTOR OF THE UNITED STATES PATENT AND TRADEMARK OFFICE
P.O. Box 1450
Alexandria, VA. 22313-1450
WWW.USPTO.GOV

ELI LILLY & COMPANY
PATENT DIVISION
P.O. BOX 6288
INDIANAPOLIS, IN 46206-6288

Date: 27 July 2007
Application No. 10/415,673
Filed: 11 September 2003
Subject: **PEROXISOME PROLIFERATOR ACTIVATED RECEPTOR ALPHA AGONISTS**

ON PETITION
37 CFR 1.48(b)

Receipt is acknowledged of the petition filed July 23, 2007 under 37 CFR 1.48(b) for correction of inventorship. The petition has been **GRANTED**.

In view of the papers filed, it has been found that during the prosecution of the instant application, not all of the inventors contributed to the invention as claimed in allowed claims 1, 4-6, 9, 10, 12-31,44-46, 49, 51, 57, 59-62 and 93. Accordingly, this application has been changed by the **deletion of IVAN COLLADO; CHRISTINA GARCIA-PAREDES; MICHAEL EDWARD LeTOURNEAU; MICHAEL JOHN MARTINELLI; DAVID SCOTT COFFEY; and JEFFREY THOMAS VICENZI.** The application will be forwarded to the Office of Initial Patent Examination (OIPE) for issuance of a corrected filing receipt, and correction of the file jacket and PTO PALM data to reflect the inventorship as corrected.

Joseph K. McKane

JOSEPH K. MCKANE
United States Patent and Trademark Office
Technology Center 1600
SPE, ART UNIT 1626
Remsen 5A05
571-272-0699

UNITED STATES PATENT AND TRADEMARK OFFICE

COMMISSIONER FOR PATENTS
UNITED STATES PATENT AND TRADEMARK OFFICE
P.O. BOX 1450
ALEXANDRIA, VA 22313-1450
www.uspto.gov

Paper No.

ELI LILLY & COMPANY
PATENT DIVISION
P.O. BOX 6288
INDIANAPOLIS IN 46206-6288

COPY MAILED

SEP 18 2007

OFFICE OF PETITIONS

In re Application of	:	
Dominianni et al.	:	DECISION ON APPLICATION
Application No. 10/415,673	:	FOR
Filed: September 11, 2003	:	PATENT TERM ADJUSTMENT
Attorney Docket No. X-14174	:	

This is a decision on the "REQUEST FOR RECONSIDERATION OF PATENT TERM ADJUSTMENT INDICATED IN NOTICE OF ALLOWANCE (37 C.F.R. § 1.705)," filed July 23, 2007. Applicants request that the initial determination of patent term adjustment under 35 U.S.C. 154(b) be corrected from three hundred thirty (330) days to four hundred forty-five (445) days.

The application for patent term adjustment is **DISMISSED**.

On April 23, 2007, the Office mailed the Determination of Patent Term Adjustment under 35 U.S.C. 154(b) in the above-identified application. The Notice stated that the patent term adjustment to date is 330 days. On July 23, 2007, applicants timely[1] submitted an application for patent term adjustment (with required fee), asserting that the correct number of days of PTA at the time of the mailing of the Notice of Allowance is 445 days.

Applicants request reconsideration on the basis that the restriction requirement sent on December 6, 2005 (and used by

[1] PALM records indicate that the Issue Fee payment was also received on July 23, 2007.

the Office as the basis for calculating the response after national filing), was withdrawn and replaced by the restriction requirement mailed on March 31, 2006. Applicants maintain that the restriction requirement mailed March 31, 2006 should be used in ascertaining examination delay under 37 CFR 1.702(a)(1).

Applicants' argument is not persuasive. On December 6, 2005, the Office issued an action as a result of the examination conducted pursuant to 35 U.S.C. 131. Moreover, on January 6, 2006, applicants responded with the filing of an election. The subsequent action in this case does not negate the fact that a first Office action was mailed on December 6, 2005. Accordingly, the period of examination delay was properly calculated based on the December 6, 2005 date.

In view thereof, the determination of patent term adjustment at the time of the mailing of the Notice of Allowance of three hundred thirty (330) days is correct.

The Office acknowledges submission of the $200.00 fee set forth in 37 CFR 1.18(e). No additional fees are required.

The application is being forwarded to the Publications Division for issuance of a patent. The patent term adjustment indicated on the patent (as shown on the Issue Notification mailed about three weeks prior to patent issuance) will include any additional adjustment accrued both for Office delay in issuing the patent more than four months after payment of the issue fee and satisfaction of all outstanding requirements, and for the Office taking in excess of three years to issue the patent (to the extent that the three-year period does not overlap with periods already accorded).

Telephone inquiries specific to this matter should be directed to the undersigned at (571) 272-3219.

Nancy Johnson

Nancy Johnson
Senior Petitions Attorney
Office of Petitions

UNITED STATES PATENT AND TRADEMARK OFFICE

Commissioner for Patents
United States Patent and Trademark Office
P.O. Box 1450
Alexandria, VA 22313-1450
www.uspto.gov

Paper No.

COPY MAILED

JUN 19 2008

OFFICE OF PETITIONS

KENYON & KENYON LLP
ONE BROADWAY
NEW YORK NY 10004

In re Application of
Tetuharu Ibaraki et al.
Application No. 10/415,675
Filed: April 30, 2003
Attorney Docket No.: 52433/730
Title: METAL OXIDE-CONTAINING GREEN PELLET FOR REDUCING FURNACE, METHOD FOR PRODUCTION THEREOF, METHOD OF REDUCTION THEREOF, AND REDUCTION FACILITIES

DECISION ON PETITION PURSUANT TO 37 C.F.R. § 1.181

This is a decision on the petition filed May 5, 2008, pursuant to 37 C.F.R. § 1.181, requesting that the holding of abandonment in the above-identified application be withdrawn.

The above-identified application became abandoned for failure to reply in a timely manner to the non-final Office action, mailed August 31, 2007, which set a shortened statutory period for reply of three months. No response was received, and no extensions of time under the provisions of 37 C.F.R. § 1.136(a) were requested. Accordingly, the above-identified application became abandoned on December 1, 2007. A notice of abandonment was mailed on April 3, 2008.

With this petition, Petitioner has asserted that a response was submitted to the Office on February 29, 2008 along with a petition for a three-month extension of time. Petitioner has submitted a copy of this response, and it is noted that it contains a certificate of mailing that is dated February 26, 2008. Moreover, Petitioner has included a copy of the postcard receipt that is associated with this submission, and it evinces that an "Amendment" and an "Extension Request" were received in the Office on February 29, 2008.

Additionally, it is noted that both this response and the petition for a three-month extension of time have been located in the electronic file, and Office records reflect the receipt of $1050 (the fee that is associated with a petition for a three-month extension of time) on February 29, 2008; therefore, it is clear that this response was timely received on February 29, 2008.

Considering the facts and circumstances of the delay at issue, as set forth on petition, it is concluded that Petitioner has met his burden of establishing that a response was timely submitted.

Accordingly, the petition under 37 C.F.R. § 1.181(a) is **GRANTED**. The holding of abandonment is **WITHDRAWN**.

The Technology Center will be notified of this decision. The Technology Center's support staff will notify the Examiner of this decision, so that the response to the non-final Office action that was received on February 29, 2008 can be processed.

Petitioner may find it beneficial to view Private PAIR within a fortnight of the present decision to ensure that the withdrawal of the holding of abandonment has been acknowledged by the Technology Center in response to this decision. It is noted that all inquiries with regard to any failure of that change in status should be directed to the Technology Center where that change of status must be effected - **the Office of Petitions cannot effectuate a change of status.**

Telephone inquiries regarding *this decision* should be directed to the undersigned at (571) 272-3225[1]. All other inquiries concerning examination procedures or status of the application should be directed to the Technology Center.

/Paul Shanoski/
Paul Shanoski
Senior Attorney
Office of Petitions

---

1 Petitioner will note that all practice before the Office should be in writing, and the action of the Office will be based exclusively on the written record in the Office. See 37 C.F.R. § 1.2. As such, Petitioner is reminded that no telephone discussion may be controlling or considered authority for Petitioner's further action(s).

30 SEP 2003

UNITED STATES PATENT AND TRADEMARK OFFICE

COMMISSIONER FOR PATENTS
UNITED STATES PATENT AND TRADEMARK OFFICE
P.O. BOX 1450
ALEXANDRIA, VA 22313-1450
www.uspto.gov

Thomas H. Majcher
6060 Center Drive, 10th Floor
Los Angeles, CA 90045

In re Application of CANO ET AL Application Serial No.: 10/415683 PCT No.: PCT/US01/09624 Int. Filing Date: 23 March 2001 Priority Date: 24 March 2000 Attorney Docket No.: ACS-63457 For: METHOD AND APPARATUS FOR CAPTURING OBJECTS BEYOND AN OPERATIVE SITE IN MEDICAL PROCEDURES	DECISION ON PETITION UNDER 37 CFR 1.137(b)

This decision is in response to applicant's "PETITION FOR REVIVAL OF AN INTERNATIONAL APPLICATION FOR PATENT DESIGNATING THE U.S. ABANDONED UNINTENTIONALLY UNDER 37 CFR 1.137(b)", filed 01 May 2003.

On 23 March 2001, applicants filed international application PCT/US01/09624 which claimed priority to an earlier application filed on 24 March 2000. A demand for international preliminary examination, in which the United States was elected, was made on 22 October 2001. Pursuant to 37 CFR 1.495, the thirty-month period for paying the basic national fee expired at midnight 24 September 2002.

On 01 May 2003, applicants filed a transmittal letter for entry into the national stage in the United States, which was accompanied by, inter alia, the requisite basic national fee as required under 35 USC 371(c)(1), a declaration as required under 35 USC 371(c)(4), a copy of the international application, a copy of the International Preliminary Examination Report (PCT/IPEA/409), and a copy of the International Search Report (PCT/ISA/210).

Under 37 CFR 1.137(b), a petition requesting that the application be revived on the grounds of unintentional delay must be filed promptly after applicant becomes aware of the abandonment and must be accompanied by: (1) the required reply, unless previously filed, (2) the petition fee required by law, (3) a statement that the entire delay in filing the required reply from the due date of the reply until the filing of a grantable petition was unintentional and (4) a terminal disclaimer (for applications filed before 08 June 1995).

As to item (1), the petition is accompanied by the required reply in the form of a check for the basic national filing fee.

As to item (2), the petition is accompanied by the required petition fee.

As to item (3), the petition is accompanied by applicant's statement that "the entire delay in filing the required reply from the due date of the reply until the filing of a grantable petition was unintentional."

As to item (4), a terminal disclaimer is not required in the present case.

CONCLUSION

The petition under 37 CFR 1.137(b) is **GRANTED**.

To date, an oath or declaration as required by 35 USC 371(c)(4) has not been filed.

This application is being forwarded to the National Stage Processing Division of the Office of PCT Operations for continued processing of the present application, including mailing of a Notification of Missing Requirements under 35 USC 371, requiring an oath or declaration as required under 35 USC 371(c)(4).

Leonard E. Smith
PCT Legal Examiner
PCT Legal Office

Wanda G. Banks
Paralegal Specialist
PCT Legal Office

WGB/LES:wgb

Tel: (703) 308-6513

29 APR 2004

UNITED STATES PATENT and TRADEMARK OFFICE

COMMISSIONER FOR PATENTS
UNITED STATES PATENT AND TRADEMARK OFFICE
P.O. BOX 1450
ALEXANDRIA, VA 22313-1450
www.uspto.gov

Thomas H. Majcher
Fulwider Patton Lee & Utecht
Howard Hughes Center
6060 Center Drive, Tenth Floor
Los Angeles, CA 90045

In re Application of	:
Cano, et al.	:
Application No.: 10/415,683	:
PCT No.: PCT/US01/09624/	:
Int. Filing Date: 23 March 2001	: DECISION
Priority Date: 24 March 2000	:
Attorney's Docket No.: ACS 64357	:
For: METHOD AND APPARATUS FOR	:
CAPTURING OBJECTS BEYOND AN OPERATIVE	:
SITE IN MEDICAL PROCEDURES	:

This application comes before the PCT Legal Office for matters arising under 35 U.S.C. 371. No petition fee is due.

BACKGROUND

On 23 March 2001, applicant filed international application PCT/US01/09624 that claimed priority of earlier United States Provisional applications, the earliest of which was filed 24 March 2000. A copy of the international application was communicated to the United States Patent and Trademark Office from the International Bureau on 04 October 2001. A Demand for international preliminary examination, in which the United States was elected, was timely filed on 22 October 2001. Accordingly, the thirty-month period for paying the basic national fee for the national stage in the United States expired at midnight on 24 September 2002.

On 01 May 2003, applicant filed a letter for entry into the national stage in the United States which was accompanied by, *inter alia*, a copy of the international application and the basic national fee of $100 as required by 35 U.S.C. 371(c). These papers were assigned application number 10/415,683.

On 02 October 2003, the United States Patent and Trademark Office in its capacity as an Elected Office mailed out a "NOTIFICATION OF MISSING REQUIREMENTS UNDER 35 U.S.C. 371 IN THE UNITED STATES DESIGNATED/ELECTED OFFICE (DO/EO/US)" (Form PCT/EO/EO905) indicating that applicant needed to provide an oath/declaration

in compliance with 37 CFR 1.497(a) and (b). The Notice set a two-month time period for response.

In order to satisfy the requirements of 35 U.S.C. 371(c)(4), on 23 December 2003, applicants filed the following papers:

1) a Response to Notification of Missing Requirements under 35 U.S.C. 371 in the United States Designated/Elected Office (DO/EO/US) including

2) an executed declaration; and,

3) a request for a one-month extension of time along with the required fee.

On 30 January 2004, the United States Patent and Trademark Office in its capacity as an Elected Office mailed out a second "NOTIFICATION OF MISSING REQUIREMENTS UNDER 35 U.S.C. 371 IN THE UNITED STATES DESIGNATED/ELECTED OFFICE (DO/EO/US)" (Form PCT/EO/EO905) again indicating that applicant needed to provide an oath/declaration incompliance with 37 CFR 1.497(a) and (b). Again, the Notice set a two-month time period for response.

DISCUSSION

A review of the file shows that applicant timely filed a signed copy of the declaration on 23 December 2003, along with the petition for a one-month extension of time and the requisite fee.

CONCLUSION

The "NOTIFICATION OF MISSING REQUIREMENTS UNDER 35 U.S.C. 371 IN THE UNITED STATES DESIGNATED/ELECTED OFFICE (DO/EO/US)" (Form PCT/EO/EO905) mailed 30 January 2004 is hereby **VACATED**.

This application is being returned to the United States Designated/Elected Office for processing in accordance with this decision; and, if appropriate, a Notification of Acceptance of Application (Form PCT/DO/EO/903) will be mailed showing a 35 U.S.C. 371 date of 23 December 2003.

Debra S. Brittingham
PCT Special Programs Examiner
PCT Legal Office

Conferee: Richard Cole
PCT Legal Examiner
PCT Legal Office

DSB/RC:dsb
Telephone: (703) 308-3401
Facsimile: (703) 308-6459

UNITED STATES PATENT AND TRADEMARK OFFICE

UNITED STATES DEPARTMENT OF COMMERCE
United States Patent and Trademark Office
Address: COMMISSIONER FOR PATENTS
P.O. Box 1450
Alexandria, Virginia 22313-1450
www.uspto.gov

CHRISTENSEN, O'CONNOR, JOHNSON, KINDNESS, PLLC
1420 FIFTH AVENUE
SUITE 2800
SEATTLE, WA 98101-2347

Mail Date: 04/20/2010

Applicant	: Guy Weyens	: DECISION ON REQUEST FOR
Patent Number	: 7608754	: RECALCULATION of PATENT
Issue Date	: 10/27/2009	: TERM ADJUSTMENT IN VIEW
Appliction No	: 10/415,686	: OF WYETH AND NOTICE OF INTENT TO
Filed	: 09/22/2003	: ISSUE CERTIFICATE OF CORRECTION
		:

The Request for Recalculation is **GRANTED** to the extent indicated.

The patent term adjustment has been determined to be **720** days. The USPTO will *sua sponte* issue a certificate of correction reflecting the amount of PTA days determined by the recalculation.

Prior to the issuance of the certificate of correction, the USPTO will afford patentee an opportunity to be heard and request reconsideration. Accordingly, patentee has **one month or thirty (30) days**, whichever is longer, to file a request for reconsideration of this patent term adjustment calculation. See 35 U.S.C. 154(b)(3)(B)(ii) and 37 CFR 1.322(a)(4). No extensions of time will be granted under 37 CFR 1.136.

Patentee should use document code PET.OP if electronically filing a request for reconsideration of this patent term adjustment calculation. The patentee must also include the information required by 37 CFR 1.705(b)(2) and the fee required by 37 CFR 1.18(e). If patentee does not file a timely request for reconsideration of this patent term adjustment calculation including the information required by 37 CFR 1.705(b)(2) and the fee required by 37 CFR 1.18(e), the USPTO will issue a certificate of correction reflecting the PTA determination noted above.

Patentee should be aware that in order to preserve the right to review in the United States District Court for the District of Columbia of the USPTO patent term adjustment determination, patentee must ensure that he or she also take the steps required under 35 U.S.C. 154(b)(4)(A) in a timely manner. Nothing in the request for recalculation should be construed as providing an alternative time frame for commencing a civil action under 35 U.S.C. 154(b)(4)(A).

Any questions concerning this decision should be directed to the Office of Patent Legal Administration at 571-272-7702.

02 OCT 2006

UNITED STATES PATENT AND TRADEMARK OFFICE

Commissioner for Patents
United States Patent and Trademark Office
P.O. Box 1450
Alexandria, VA 22313-1450
www.uspto.gov

Thomas L. Adams
120 Eagle Rock Avenue
P.O. Box 340
East Hanover, NJ 07936

In re Application of	:	
MARKS, Simeon	:	
Application No.: 10/415,690	:	DECISION ON
PCT No.: PCT/GB01/04874	:	
Int. Filing Date: 02 November 2001	:	PETITION
Priority Date: 02 November 2000	:	
Attorney Docket No.: MKS	:	UNDER 37 CFR 1.181
For: IMPLEMENT HOLDER	:	

This decision is in response to applicant's letter, filed with the United States Patent and Trademark Office on 27 July 2006. It has been treated as a petition under 37 CFR 1.181.

BACKGROUND

On 02 November 2001, applicant filed international application PCT/GB01/04874, claiming a priority date of 02 November 2000. A copy of the international application was communicated to the United States Patent and Trademark Office (USPTO) from the International Bureau on 10 May 2002. The deadline for entry into the national stage in the United States was 02 May 2003.

On 01 May 2003, applicant filed a submission for entry into the national stage in the United States which was accompanied by, *inter alia*, the U.S. Basic National Fee and an unexecuted declaration.

On 04 September 2003, the Office mailed a Notification of Acceptance (Form PCT/DO/EO/903) to the above East Hanover address listing both 35 U.S.C. 371 dates as 01 May 2003.

On 10 September 2003, the Office mailed a Notification of Acceptance (Form PCT/DO/EO/903) to Fred Hirth in Glendale, AZ, customer no. 22038. It listed the 35 U.S.C. 371(c)(1), (c)(2) and (c)(4) date as 01 May 2003, but the date for all 35 U.S.C. 371 requirements was blank

On 03 October 2003, applicant supplied a declaration executed by the inventor in compliance with 37 CFR 1.497(a)-(b).

On 22 September 2005, the Office mailed a non-final rejection to the Arizona address. The action was eventually returned as undeliverable.

On 03 May 2006, the Office mailed Notice of Abandonment, indicating that applicant had failed to respond to the 22 September 2005 office action. This notice was also returned as undeliverable.

On 27 July 2006, applicant submitted this petition to correct the address and to withdraw the holding of abandonment.

DISCUSSION

The Notifications of Acceptance mailed on 04 September 2003 and 10 September 2003 issued in error. The declaration fulfilling the 35 U.S.C. 371(c)(1), (c)(2) and (c)(4) requirements was not received until 03 October 2003. They are both vacated.

Additionally, the Office incorrectly listed the correspondence address for this application as customer no. 22038. The unexecuted power of attorney appointed practitioners associated with customer no. 20238. The correspondence address listed in the papers has been entered.

CONCLUSION

For the reasons set forth above, the petition under 37 CFR 1.181 is **GRANTED**.

The Notifications of Acceptance (Form PCT/DO/EO/903) mailed on 04 September 2003 and 10 September 2003 are **VACATED**.

This application is being forwarded to the National Stage Processing Division of the Office of the PCT Operations for continued processing, including mailing of a corrected Notification of Acceptance indicating that the date under 35 U.S.C. §371(c)(1), (c)(2) and (c)(4) is 03 October 2003. This application is also being referred to Technology Center 3700 for appropriate action.

Erin P. Thomson

Erin P. Thomson
Attorney Advisor
PCT Legal Administration

Telephone: 571-272-3292
Facsimile: 571-273-0459

UNITED STATES PATENT AND TRADEMARK OFFICE

Commissioner for Patents
United States Patent and Trademark Office
P.O. Box 1450
Alexandria, VA 22313-1450
www.uspto.gov

OLIFF & BERRIDGE, PLC
P.O. BOX 320850
ALEXANDRIA, VA 22320-4850

COPY MAILED

OCT 0 6 2008

OFFICE OF PETITIONS

In re Patent No. 7,359,862
Application No. 10/415,703
Filed: July 22, 2003
Issued: April 15, 2008
Attorney Docket No. 115859

ON PETITION

This is a decision on the petition filed May 7, 2008, which is being treated as a request under 37 CFR 3.81(b)[1] to correct the name of the assignee on the front page of the above-identified patent by way of a Certificate of Correction.

The request is **GRANTED**.

This matter is being referred to the Certificates of Correction Branch for issuance of the requested Certificate of Correction.

Telephone inquiries concerning this decision may be directed to Joan Olszewski at (571) 272-7751. Inquiries regarding the issuance of a certificate of correction should be directed to the Certificate of Correction Branch at (571) 272-4200.

/Liana Walsh/
Liana Walsh
Petitions Examiner
Office of Petitions

[1] *See* MPEP 1309, subsection II; and Official Gazette of June 22, 2004.

UNITED STATES PATENT AND TRADEMARK OFFICE

UNITED STATES DEPARTMENT OF COMMERCE
United States Patent and Trademark Office
Address: COMMISSIONER FOR PATENTS
P.O. Box 1450
Alexandria, Virginia 22313-1450
www.uspto.gov

HUNTON & WILLIAMS LLP
INTELLECTUAL PROPERTY DEPARTMENT
1900 K STREET, N.W.
SUITE 1200
WASHINGTON, DC 20006-1109

Mail Date: 04/21/2010

Applicant	: Klaus Schimmer	: DECISION ON REQUEST FOR
Patent Number	: 7587322	: RECALCULATION of PATENT
Issue Date	: 09/08/2009	: TERM ADJUSTMENT IN VIEW
Appliction No	: 10/415,709	: OF WYETH AND NOTICE OF INTENT TO
Filed	: 10/21/2003	: ISSUE CERTIFICATE OF CORRECTION
		:

The Request for Recalculation is **GRANTED** to the extent indicated.

The patent term adjustment has been determined to be **906** days. The USPTO will *sua sponte* issue a certificate of correction reflecting the amount of PTA days determined by the recalculation.

Prior to the issuance of the certificate of correction, the USPTO will afford patentee an opportunity to be heard and request reconsideration. Accordingly, patentee has **one month or thirty (30) days**, whichever is longer, to file a request for reconsideration of this patent term adjustment calculation. See 35 U.S.C. 154(b)(3)(B)(ii) and 37 CFR 1.322(a)(4). No extensions of time will be granted under 37 CFR 1.136.

Patentee should use document code PET.OP if electronically filing a request for reconsideration of this patent term adjustment calculation. The patentee must also include the information required by 37 CFR 1.705(b)(2) and the fee required by 37 CFR 1.18(e). If patentee does not file a timely request for reconsideration of this patent term adjustment calculation including the information required by 37 CFR 1.705(b)(2) and the fee required by 37 CFR 1.18(e), the USPTO will issue a certificate of correction reflecting the PTA determination noted above.

Patentee should be aware that in order to preserve the right to review in the United States District Court for the District of Columbia of the USPTO patent term adjustment determination, patentee must ensure that he or she also take the steps required under 35 U.S.C. 154(b)(4)(A) in a timely manner. Nothing in the request for recalculation should be construed as providing an alternative time frame for commencing a civil action under 35 U.S.C. 154(b)(4)(A).

Any questions concerning this decision should be directed to the Office of Patent Legal Administration at 571-272-7702.

UNITED STATES PATENT AND TRADEMARK OFFICE

UNITED STATES DEPARTMENT OF COMMERCE
United States Patent and Trademark Office
Address: COMMISSIONER FOR PATENTS
P.O. Box 1450
Alexandria, Virginia 22313-1450
www.uspto.gov

HUNTON & WILLIAMS LLP
INTELLECTUAL PROPERTY DEPARTMENT
1900 K STREET, N.W.
SUITE 1200
WASHINGTON, DC 20006-1109

Mail Date: 05/18/2010

Applicant : Klaus Schimmer
Patent Number : 7587322
Issue Date : 09/08/2009
Application No : 10/415,709
Filed : 10/21/2003

: NOTICE CONCERNING IMPROPER
: CALCULATION OF PATENT TERM
: ADJUSTMENT BASED UPON USPTO
: IMPROPERLY MEASURING REDUCTION
: PERIOD UNDER 37 CFR 1.704(c)(10).

The United States Patent and Trademark Office (USPTO) discovered that in processing the recent recalculation decisions mailed in response to patentee's filed Request for Recalculation of Patent Term Adjustment in view of Wyeth, the USPTO improperly measured the reduction period for reductions under 37 CFR 1.704(c)(10). Pursuant to 37 CFR 1.704(c)(10), patentee's reduction begins on the date of filing the amendment under 37 CFR 1.312 ("1.312 amendment") or other related paper and ends on the date that the Office mails a response to the filing of the 1.312 amendment or other paper. It has been discovered that during the recalculation, the calculation failed to the limit the reduction to the mail date of the response to the 1.312 amendment or other paper. Accordingly, patentee's reductions were greater than warranted.

This notice **VACATES** the previous GRANTED request for recalculation and provides patentee with a revised GRANTED recalculation.

The patent term adjustment has been determined to be **990** days. The USPTO will *sua sponte* issue a certificate of correction reflecting the amount of patent term adjustment (PTA) days determined by the recalculation.

Prior to the issuance of the certificate of correction, the USPTO will afford patentee an opportunity to be heard and request reconsideration. Accordingly, patentee has **one month or thirty (30) days** from the mail date of this notice, whichever is longer, to file a request for reconsideration of this PTA calculation. See 35 U.S.C. § 154(b)(3)(B)(ii) and 37 CFR 1.322(a)(4).

Patentee should use document code PET.OP if electronically filing a request for reconsideration of this PTA calculation. The patentee must also include the information required by 37 CFR 1.705(b)(2), and the fee required by 37 CFR 1.18(e). If patentee does not file a timely request for reconsideration of this PTA calculation, including the information required by 37 CFR 1.705(b)(2) and the fee required by 37 CFR 1.18(e), the USPTO will issue a certificate of correction reflecting the PTA determination noted above.

Patentee should be aware that in order to preserve the right of review of the USPTO's PTA determination in the United States District Court for the District of Columbia, patentee must ensure that the steps required under 35 U.S.C. § 154 (b)(4) are taken in a timely manner. Nothing in the request for recalculation should be construed as providing an alternative time frame for commencing a civil action under 35 U.S.C. § 154(b)(4).

UNITED STATES PATENT AND TRADEMARK OFFICE

Commissioner for Patents
United States Patent and Trademark Office
P.O. Box 1450
Alexandria, VA 22313-1450
www.uspto.gov

MORGAN LEWIS & BOCKIUS LLP
1111 PENNSYLVANIA AVENUE NW
WASHINGTON DC 20004

COPY MAILED

OCT 30 2007

OFFICE OF PETITIONS

In re Application of
LINWOOD ANDERSON
Application No. 10/415,714
Filed: 09/19/2003
Attorney Docket No. 061935-5001

DECISION ON PETITION

This is a decision on the petition under 37 CFR 1.137(b), filed June 18, 2007, to revive the above-identified application.

The petition is **GRANTED**.

The application became abandoned for failure to reply in a timely manner to the Restriction Requirement, mailed August 11, 2006, which set a shortened statutory period for reply of one (1) month or thirty (30) days (whichever is later). No extensions of time under the provisions of 37 CFR 1.136(a) were obtained. Accordingly, the application became abandoned on September 12, 2006. The Office mailed a Notice of Abandonment on March 12, 2007.

The petition satisfies the requirements of 37 CFR 1.137(b) in that petitioner has supplied (1) the reply in the form an Election; (2) the petition fee; and (3) an acceptable statement of unintentional delay.

37 CFR 1.137(b)(3) requires a statement that "the entire delay in filing the required reply from the due date for the reply until the filing of a grantable petition pursuant to this paragraph was unintentional" be submitted. The statement presented will be accepted and construed as the statement required by 37 CFR 1.137(b)(3). Petitioner must notify the Office if this is not a correct interpretation of the statement contained in the present petition.

The Office reminds petitioner that an extension of time under 37 CFR 1.136 must be filed prior to the expiration of the maximum extendable period for reply. See In re Application of S., 8 USPQ2d 1630, 1631 (Comm'r Pats. 1988). As the $1,020.00 extension of time fee submitted with the petition on June 18, 2007, was subsequent to the maximum extendable period for reply, the fee is unnecessary and will be credited to petitioner's deposit account.

This matter is being forwarded to Technology Center AU 1621.

Telephone inquiries concerning this matter may be directed to the undersigned at (571) 272-3211.

Christina T. Donnell

Christina Tartera Donnell
Senior Petitions Attorney
Office of Petitions

30 SEP 2003

#5

UNITED STATES PATENT AND TRADEMARK OFFICE

COMMISSIONER FOR PATENTS
UNITED STATES PATENT AND TRADEMARK OFFICE
P.O. Box 1450
ALEXANDRIA, VA 22313-1450
www.uspto.gov

Glenn Patent Group
3475 Edison Way, Suite L
Menlo Park, CA 94025

In re Application of QUIGLEY, Ben, et al. Application No.: 10/415,720 PCT No.: PCT/US00/30099 Int. Filing Date: 31 October 2000 Priority Date: None Attorney Docket No.: NETS0079 For: CLICK-TO-ADD, JOT-IT-DOWN, AND ADD BANNER	DECISION ON PETITION UNDER 37 CFR 1.47(a)

This is a decision on applicants' "Based Upon Unavailability of Inventor," filed in the United States Patent and Trademark Office (USPTO) on 02 September 2003.

BACKGROUND

On 31 October 2000, applicants filed international application PCT/US00/30099. A Demand for international preliminary examination, in which the United States was elected, was filed on 14 May 2002, within nineteen months from the priority date. Accordingly, the thirty-month period for paying the basic national fee in the United States expired at midnight on 30 April 2003.

On 30 April 2003, applicants filed a submission for entry into the national stage in the United States which was accompanied by, *inter alia*, the U.S. Basic National Fee.

On 02 July 2003, the Office mailed a Notification of Missing Requirements (Form PCT/DO/EO/905) indicating, *inter alia*, that an oath or declaration of the inventors in compliance with 37 CFR 1.497(a)-(b) and the surcharge for late filing of the oath or declaration were required.

On 02 September 2003, applicants submitted the instant petition under 37 CFR 1.47(a).

DISCUSSION

A petition under 37 CFR 1.47 must be accompanied by: (1) the fee under 37 CFR 1.17(h), (2) proof of pertinent facts, namely that the inventor refuses to sign after being presented with the application papers or cannot be reached after diligent effort, (3) a statement of the last known address of the inventor, and (4) an oath or declaration by the 37 CFR 1.47(a) applicant on behalf of himself or herself and the nonsigning applicant

Items (1), (3) and (4) have been met. (1) The petition fee will be charged to deposit account no. 07-1445, as authorized. (3) The petition lists the last known address of non-signing inventor Michael Sugarbaker as 2342 Shattuck Avenue, Berkeley, CA 94704. (4) The declaration complies with 37 CFR 1.497(a)-(b) and 37 CFR 1.47.

Item (2) has not been satisfied. When applicants are unable to locate the inventor after a diligent effort, "a statement of facts should be submitted that fully describes the exact facts which are relied on to establish that a diligent effort was made." MPEP §409.03(d). "The statement must be signed where at all possible by a person having firsthand knowledge of the facts recited therein." MPEP §409.03(d). Michael Glenn's statement does not indicate that he has the requisite first hand knowledge. Additionally, copies of documentary evidence, e.g. internet searches, that support a finding that the inventor could not be located after a diligent effort should be submitted. MPEP §409.03(d).

CONCLUSION

For the above reasons, applicants' petition under 37 CFR 1.47(a) is **DISMISSED** without prejudice.

If reconsideration on the merits of this petition is desired, a proper response must be filed within TWO (2) MONTHS from the mail date of this decision. Failure to timely file the proper response will result in abandonment of this application. Any reconsideration request should include a cover letter entitled "Renewed Petition Under 37 CFR 1.47(a)." No additional petition fee is required.

Any further correspondence with respect to this matter should be addressed to the Mail Stop PCT, Commissioner for Patents, Office of PCT Legal Administration, P.O. Box 1450, Alexandria, Virginia 22313-1450, with the contents of the letter marked to the attention of the Office of PCT Legal Administration.

Leonard E. Smith
PCT Legal Examiner
PCT Legal Administration

Erin M. Pender
Attorney Advisor
PCT Legal Administration

Telephone: (703) 305-0455
Facsimile: (703) 308-6459

10/02/2003 SNAJARRO 00000003 071445 10415720
01 FC:1460 130.00 DA

03 MAY 2004

UNITED STATES PATENT AND TRADEMARK OFFICE

COMMISSIONER FOR PATENTS
UNITED STATES PATENT AND TRADEMARK OFFICE
P.O. BOX 1450
ALEXANDRIA, VA 22313-1450
www.uspto.gov

Glenn Patent Group
3475 Edison Way, Suite L
Menlo Park, CA 94025

In re Application of	:	
QUIGLEY, Ben, et al.	:	
Application No.: 10/415,720	:	DECISION ON
PCT No.: PCT/US00/30099	:	
Int. Filing Date: 31 October 2000	:	PETITION UNDER
Priority Date: None	:	
Attorney Docket No.: NETS0079	:	37 CFR 1.47(a)
For: CLICK-TO-ADD, JOT-IT-DOWN, AND ADD BANNER	:	

This is a decision on applicants' "Transmittal Form," filed in the United States Patent and Trademark Office (USPTO) on 12 November 2003.

BACKGROUND

On 31 October 2000, applicants filed international application PCT/US00/30099. A Demand for international preliminary examination, in which the United States was elected, was filed on 14 May 2002, within nineteen months from the priority date. Accordingly, the thirty-month period for paying the basic national fee in the United States expired at midnight on 30 April 2003.

On 30 April 2003, applicants filed a submission for entry into the national stage in the United States which was accompanied by, *inter alia*, the U.S. Basic National Fee.

On 02 July 2003, the Office mailed a Notification of Missing Requirements (Form PCT/DO/EO/905) indicating, *inter alia*, that an oath or declaration of the inventors in compliance with 37 CFR 1.497(a)-(b) and the surcharge for late filing of the oath or declaration were required.

On 02 September 2003, applicants submitted a petition under 37 CFR 1.47(a).

On 30 September 2003, the Office dismissed the petition without prejudice.

On 12 November 2003, applicants submitted a declaration executed by the previously nonsigning inventor.

DISCUSSION

Applicants have submitted an executed declaration in compliance with 37 CFR 1.497(a)-(b). The petition under 37 CFR 1.47(a) is moot.

CONCLUSION

For the above reasons, applicants' petition under 37 CFR 1.47(a) is **DISMISSED AS MOOT**.

This application is being forwarded to the National Stage Processing Branch of the Office of PCT Operations to continue national stage processing of the application, including accordation of a 35 U.S.C. §§371(c)(1), (c)(2) and (c)(4) date of **12 November 2003**.

Leonard E. Smith
PCT Legal Examiner
PCT Legal Administration

Erin M. Pender
Attorney Advisor
PCT Legal Administration

Telephone: (703) 305-0455
Facsimile: (703) 308-6459

UNITED STATES PATENT AND TRADEMARK OFFICE

UNITED STATES DEPARTMENT OF COMMERCE
United States Patent and Trademark Office
Address: COMMISSIONER FOR PATENTS
P.O. Box 1450
Alexandria, Virginia 22313-1450
www.uspto.gov

GLENN PATENT GROUP
3475 EDISON WAY, SUITE L
MENLO PARK, CA 94025

Mail Date: 04/21/2010

Applicant	: Tony Espinoza	: DECISION ON REQUEST FOR
Patent Number	: 7627830	: RECALCULATION of PATENT
Issue Date	: 12/01/2009	: TERM ADJUSTMENT IN VIEW
Appliction No	: 10/415,720	: OF WYETH AND NOTICE OF INTENT TO
Filed	: 11/12/2003	: ISSUE CERTIFICATE OF CORRECTION
		:

The Request for Recalculation is **GRANTED** to the extent indicated.

The patent term adjustment has been determined to be **1151** days. The USPTO will *sua sponte* issue a certificate of correction reflecting the amount of PTA days determined by the recalculation.

Prior to the issuance of the certificate of correction, the USPTO will afford patentee an opportunity to be heard and request reconsideration. Accordingly, patentee has **one month or thirty (30) days**, whichever is longer, to file a request for reconsideration of this patent term adjustment calculation. See 35 U.S.C. 154(b)(3)(B)(ii) and 37 CFR 1.322(a)(4). No extensions of time will be granted under 37 CFR 1.136.

Patentee should use document code PET.OP if electronically filing a request for reconsideration of this patent term adjustment calculation. The patentee must also include the information required by 37 CFR 1.705(b)(2) and the fee required by 37 CFR 1.18(e). If patentee does not file a timely request for reconsideration of this patent term adjustment calculation including the information required by 37 CFR 1.705(b)(2) and the fee required by 37 CFR 1.18(e), the USPTO will issue a certificate of correction reflecting the PTA determination noted above.

Patentee should be aware that in order to preserve the right to review in the United States District Court for the District of Columbia of the USPTO patent term adjustment determination, patentee must ensure that he or she also take the steps required under 35 U.S.C. 154(b)(4)(A) in a timely manner. Nothing in the request for recalculation should be construed as providing an alternative time frame for commencing a civil action under 35 U.S.C. 154(b)(4)(A).

Any questions concerning this decision should be directed to the Office of Patent Legal Administration at 571-272-7702.

UNITED STATES PATENT AND TRADEMARK OFFICE

COMMISSIONER FOR PATENTS
UNITED STATES PATENT AND TRADEMARK OFFICE
P.O. BOX 1450
ALEXANDRIA, VA 22313-1450
www.uspto.gov

McDermott Will & Emery
7th Floor
4370 La Jolla Village Drive
San Diego CA 92122

COPY MAILED

MAR 21 2006

OFFICE OF PETITIONS

Applicant: Zhou et al.
Appl. No.: 10/415,724
International Filing Date: November 1, 2002
Title: PROKINETICIN POLYPEPTIDES, RELATED COMPOSITIONS AND METHODS
Attorney Docket No.: 066778-0316
Pub. No.: US 2005/0074758 A1
Pub. Date: April 7, 2005

This is a decision on the request for a corrected patent application publication under 37 CFR 1.221(b), filed on June 7, 2005, for the above-identified application.

The request is granted.

At least one of the errors may have been due to the quality of the text in the application. Applicants have been advised to file applications having cleaner and larger text with sufficient clarity and contrast to permit reproduction, such as electronic reproduction by digital imaging and optical character recognition, which will avoid errors in the patent application publication process. See 37 CFR 1.52.

The corrected patent application publication will be published in due course, unless the patent issues before the application is republished.

Inquiries relating to this matter may be directed to Mark O. Polutta at (571) 272-7709.

Mark O. Polutta
Office of Patent Legal Administration
Office of the Deputy Commissioner
for Patent Examination Policy

UNITED STATES PATENT AND TRADEMARK OFFICE

COMMISSIONER FOR PATENTS
UNITED STATES PATENT AND TRADEMARK OFFICE
P.O. BOX 1450
ALEXANDRIA, VA 22313-1450
www.uspto.gov

GARY C. COHN PLLC
1147 NORTH FOURTH STREET
UNIT 6E
PHILADELPHIA, PA 19123

COPY MAILED

FEB 16 2007

OFFICE OF PETITIONS

In re Application of JUNG, et al. Application No. 10/415,729 Filed: April 30, 2003 Attorney Docket No. TSA 018	: : : : :	ON PETITION

This is a decision on the petition under 37 CFR 1.137(b) to revive the above-identified application, filed September 11, 2006.

The petition is **GRANTED**.

The application became abandoned for failure to pay the issue fee on or before June 10, 2005. A Notice of Abandonment was mailed on May 18, 2006.

The petition satisfies the requirements of 37 CFR 1.137(b) in that petitioner has supplied (1) the reply in the form of the $1400 issue fee and the $300 publication fee; (2) the petition fee of $1,500; and (3) the required statement of unintentional delay.

The application is being referred to the Office of Publications to be processed into a patent.

Telephone inquires related to this decision should be directed to the undersigned at (571) 272-3204. Telephone inquiries related to processing at Publishing Division should be directed to (571) 272-4200.

Sherry D. Brinkley
Petitions Examiner
Office of Petitions

SPE RESPONSE FOR CERTIFICATE OF CORRECTION

Paper No.: X

DATE : February 06, 2008

TO SPE OF : ART UNIT 1626

SUBJECT : Request for Certificate of Correction for Appl. No.: 10/415,751 Patent No.: 7138400 B2

Deleted: 2881
Deleted: 1
Deleted: 043
Deleted: 262
Deleted: 45584

A response is requested with respect to a request for a certificate of correction.

With respect to the change(s) requested to correct Office and/or Applicant's errors, should the patent read as shown in the certificate of correction attached herewith or the COCIN document(s), in IFW images for the above-identified patented application? No new matter should be introduced, nor should the scope or meaning of the claims be changed.

If the response is for an IFW, within 7 days, please complete and forward the response, to the employee (named below) via scanning into application images, using document code COCX.

DO NOT SENT TO ATTORNEY

If the response is for a paper file wrapper, please complete the response and forward the response with the paper file wrapper, to the employee (named below), within 7 days, to:

Certificates of Correction Branch (CofC)
South Tower - 9A22
Palm Location 7580

You can fax the Directors/SPE response to 571-270-9990

LAMONTE NEWSOME

Certificates of Correction Branch

703-308-9390 ext. 112

Thank You For Your Assistance

The request for issuing the above-identified correction(s) is hereby:

Note your decision on the appropriate box.

☑ Approved	All changes apply.
☐ Approved in Part	Specify below which changes do not apply.
☐ Denied	State the reasons for denial below.

Comments: _____

Joseph K. McKane

JOSEPH K. McKANE
SUPERVISORY PATENT EXAMINER
TECHNOLOGY CENTER 1600

A.U. 1626

PTOL-306 (REV. 7/03) U.S. DEPARTMENT OF COMMERCE Patent and Trademark Office

UNITED STATES PATENT AND TRADEMARK OFFICE

Commissioner for Patents
United States Patent and Trademark Office
P.O. Box 1450
Alexandria, VA 22313-1450
www.uspto.gov

AKIN GUMP STRAUSS HAUER & FELD L.L.P.
ONE COMMERCE SQUARE
2005 MARKET STREET, SUITE 2200
PHILADELPHIA, PA 19103

COPY MAILED

JAN 12 2007

OFFICE OF PETITIONS

In re Application of	:	
Yasumori Hino et al	:	
Application No. 10/415,755	:	ON PETITION
Filed: May 1, 2003	:	
Attorney Docket No. 8861-458US (P26569-03)	:	

This is a decision on the petition filed, September 5, 2006 under 37 CFR 1.137(b), to revive the above-identified application.

The petition is **GRANTED.**

The above-identified application became abandoned for failure to reply within the meaning of 37 CFR 1.113 in a timely manner to the final Office action mailed January 23, 2006, which set a shortened statutory period for reply of three (3) months. No extension of time under the provisions of 37 CFR 1.136(a) were obtained. Accordingly, the above-identified application became abandoned on April 24, 2006.

The above-identified application is being revived solely for purposes of continuity with a Request For Continued Examination (RCE) filed on September 5, 2006.

Telephone inquiries concerning this decision should be directed to Irvin Dingle at (571) 272-3210.

This matters is being referred to Technology Center AU 2627 for further processing.

Irvin Dingle
Petitions Examiner
Office of Petitions

UNITED STATES PATENT AND TRADEMARK OFFICE

COMMISSIONER FOR PATENTS
UNITED STATES PATENT AND TRADEMARK OFFICE
P.O. BOX 1450
ALEXANDRIA, VA 22313-1450
www.uspto.gov

Michael J Gratz
Boyle Fredrickson Newholm Stein & Gratz
250 Plaza Suite 1030
250 East Wisconsin Avenue
Milwaukee, WI 53202

COPY MAILED

JUL 21 2006

OFFICE OF PETITIONS

In re Application of:	:	
Christine et al.	:	
Application No. 10/415,766	:	DECISION ON
Filed: September 15, 2003	:	PETITION
Attorney Docket Number: 146.062	:	

This is a decision on the petition for revival of an application abandoned unintentionally under 37 CFR 1.137(b), filed March 2, 2006, to revive the above-identified application.

This Petition is hereby **granted**.

The above-identified application became abandoned for failure to reply in a timely manner to the final Office action, mailed May 20, 2005. The Office action set a shortened statutory period for reply of three (3) months from the mail date of the Notice, and also provided for extensions of time under 37 CFR 1.136(a). No reply having been received, the application became abandoned August 21, 2005. A Notice of Abandonment was mailed February 22, 2006.

With the instant petition, Applicant has filed a Terminal Disclaimer in response to the final Office action.

This application is being returned to Technology Center 3735 for processing of the Terminal Disclaimer in due course.

Telephone inquiries related to this decision may be directed to the undersigned at (571) 272-3232.

Derek L. Woods
Attorney
Office of Petitions

UNITED STATES PATENT AND TRADEMARK OFFICE

Commissioner for Patents
United States Patent and Trademark Office
P.O. Box 1450
Alexandria, VA 22313-1450
www.uspto.gov

COPY MAILED

SEP 18 2006

OFFICE OF PETITIONS

Walter Fasse
PO Box 726
Hampden, Maine 04444-0726

In re Application of Stoever Application No. 10/415,779 Patent No. 7,036,272 Filed: May 1, 2006 Attorney Docket No. 4521	: DECISION GRANTING PTA REQUEST

This decision is in response to Patentees "REQUEST FOR REVIEW OF PTA DETERMINATION" FILED ON May 8, 2006 requesting that the USPTO review the PTA determination at the time of the issuance of the patent in light of the submission of a supplemental oath or declaration filed on February 28, 2006. Th Office thanks patentees for their good faith and candor in bringing this matter to the attention of the USPTO.

Patentee's request is **GRANTED**. The Office will *sua sponte* issue a certificate of correction reflecting an adjustment of 36-days rather than the 100-day amount printed on the front of the patent. The Office will also adjust the PTA calculation reflected in PAIR to reflect this decision.

If patentee disputes this determination, patentee may file a reply within **thirty days or one-month** whichever is longer. No extensions of time under 37 CFR 1.136.

Patentee argues that the Office erred in failing to take into consideration the patentee's submission of a supplemental oath or declaration that was filed on February 28, 2006.

Patentee's argument is persuasive. Upon review, the record clearly reflects the submission of a supplemental oath or declaration that was submitted after the mail date of the notice of allowance and is considered an applicant delay pursuant to 37 CFR 1.704(c)(10). Although the submission of the oath or declaration is found in the Image File Wrapper (IFW), USPTO personnel failed to enter the submission into PALM and accordingly, the PTA determination fail to take such submission into consideration and did not assess applicant delay for such submission. The submission should have amounted to a reduction of 64-days.[1] Overall the amount of PTA at time

[1]The reduction began on February 28, 2006 and ended on May 2, 2006, a sixty-four day-delay.

of issuance is 36 days (105-5-64=36).[2]

After review of this decision, this application will be forwarded to the certificate of correction branch for a prompt issuance of a certificate of correction. The certificate of correction branch will wait the longer of thirty-days or one-month and then issue such certificate of correction if no reply.

Since this letter is considered a letter of good faith and candor, the USPTO will not assess a $200.00 fee.

Any questions concerning the issuance of this patent should be directed to Kery A. Fries, Office of Patent Legal Administration, Office of Deputy Commissioner for Patent Examination Policy at 571-272-7757

Kery A. Fries

Kery A. Fries
Senior Legal Advisor
Office of Patent Legal Administration
Office of Deputy Commissioner
for Patent Examination Policy

cc: Adjusted Pair Calculation
Draft Certificate of Correction

[2]The Office delay was 105-days pursuant to 37 CFR 1.702(a)(1). Applicant delay was 5-days pursuant to 37 CFR 1.704(b) and 64-days pursuant to 37 CFR 1.704(c)(10).

Day : Sunday
Date: 9/10/2006

PALM INTRANET

Time: 09:26:17

PTA Calculations for Application: 10/415779			
Application Filing Date:	05/01/2003	PTO Delay (PTO):	105
Issue Date of Patent:	05/02/2006	Three Years:	0
Pre-Issue Petitions:	0	Applicant Delay (APPL):	5
Post-Issue Petitions:	0	Total PTA (days):	36
PTO Delay Adjustment:	-64		

File Contents History

Number	Date	Contents Description	PTO	APPL	START
41	09/10/2006	ADJUSTMENT OF PTA CALCULATION BY PTO		64	
36.5	04/12/2006	PTA 36 MONTHS			
36	05/02/2006	PATENT ISSUE DATE USED IN PTA CALCULATION			
35	03/17/2006	EXPORT TO FINAL DATA CAPTURE			
34	03/16/2006	DISPATCH TO FDC			
33	03/09/2006	APPLICATION IS CONSIDERED READY FOR ISSUE			
32	02/28/2006	ISSUE FEE PAYMENT VERIFIED			
31	02/28/2006	ISSUE FEE PAYMENT RECEIVED			
30	02/13/2006	FINISHED INITIAL DATA CAPTURE			
29	12/07/2005	EXPORT TO INITIAL DATA CAPTURE			
28	12/05/2005	MAIL NOTICE OF ALLOWANCE			
27	12/05/2005	MAIL EXAMINER'S AMENDMENT			
26	11/28/2005	EXAMINER'S AMENDMENT COMMUNICATION			
25	11/28/2005	ISSUE REVISION COMPLETED			
24	11/28/2005	NOTICE OF ALLOWANCE DATA VERIFICATION COMPLETED			
23	11/28/2005	CASE DOCKETED TO EXAMINER IN GAU			
22	11/23/2005	NOTICE OF ALLOWABILITY			
21	11/15/2005	DATE FORWARDED TO EXAMINER			
20	11/10/2005	AMENDMENT AFTER FINAL REJECTION			
19	08/10/2005	MAIL FINAL REJECTION (PTOL - 326)			
18	08/08/2005	FINAL REJECTION			
17	05/27/2005	DATE FORWARDED TO EXAMINER			
16	05/24/2005	RESPONSE TO ELECTION / RESTRICTION FILED			
15	04/25/2005	MAIL RESTRICTION REQUIREMENT			

14	04/18/2005	REQUIREMENT FOR RESTRICTION / ELECTION			
13	02/04/2005	DATE FORWARDED TO EXAMINER			
12	01/19/2005	RESPONSE AFTER NON-FINAL ACTION		5	10
11	01/19/2005	WORKFLOW INCOMING AMENDMENT IFW			
10	10/14/2004	MAIL NON-FINAL REJECTION	105		-1
9	09/28/2004	NON-FINAL REJECTION			
8	09/20/2004	CASE DOCKETED TO EXAMINER IN GAU			
7	04/28/2004	IFW TSS PROCESSING BY TECH CENTER COMPLETE			
5	07/11/2003	INFORMATION DISCLOSURE STATEMENT (IDS) FILED			
4	10/30/2003	CLEARED BY OIPE CSR			
3	08/20/2003	APPLICATION DISPATCHED FROM OIPE			
2	08/20/2003	NOTICE OF DO/EO ACCEPTANCE MAILED			
1	05/01/2003	INITIAL EXAM TEAM NN			

Search Another: Application# Search

EXPLANATION OF PTA CALCULATION

EXPLANATION OF PTE CALCULATION

To go back use Back button on your browser toolbar.

Back to PALM | ASSIGNMENT | OASIS | Home page

DRAFT

UNITED STATES PATENT AND TRADEMARK OFFICE

CERTIFICATE OF CORRECTION

PATENT : 7,036,272 B2

DATED : May 2, 2006

INVENTOR(S) : Stoever

It is certified that error appears in the above-identified patent and that said Letters Patent is hereby corrected as shown below:

On the cover page, in "[*] Notice: Subject to any disclaimer, the term of this patent is extended or adjusted under 35 USC 154(b) by 100 days",

delete the phrase "by 100 days" and insert --by 36 days--.

UNITED STATES PATENT AND TRADEMARK OFFICE

Commissioner for Patents
United States Patent and Trademark Office
P.O. Box 1450
Alexandria, VA 22313-1450
www.uspto.gov

FINNEGAN HENDERSON FARABOW GARRETT & DUNNER
LLP
901 NEW YORK AVENUE NW
WASHINGTON DC 20001-4413

COPY MAILED

OCT 1 0 2008

OFFICE OF PETITIONS

In re Application of	:	
Ronald Garey	:	
Application No. 10/415,804	:	ON PETITION
Filed: May 5, 2003	:	
Attorney Docket No. 08049.0826	:	

This is a decision on the petition filed on March 3, 2008, pursuant to 37 CFR 1.137(b), to revive the above-identified application.

The petition is **DISMISSED** as moot.

The Office mailed a final Office action on August 30, 2007. This Office action set a shortened statutory period for reply of three (3) months. On November 30, 2007, Applicants filed a Notice of Appeal. Accordingly, Applicants had a two (2) month extendable period of time from that date in which to file an Appeal Brief. The last possible day for submission, together with the maximum obtainable five (5) month extension of time, would be June 30, 2008. On March 3, 2008, applicants filed the instant petition for revival, together with an RCE.

Regarding this situation, the Manual of Patent Examining Procedure Section 706.07(h) states:

> If an applicant files an RCE under 37 CFR 1.114 after the filing of a Notice of Appeal to the Board of Patent Appeals and Interferences (Board), but prior to a decision on the appeal, it will be treated as a request to withdraw the appeal and to reopen prosecution of the application before the examiner, regardless of whether the RCE is proper or improper. See 37 CFR 1.114(d). The Office will withdraw the appeal upon the filing of an RCE.

In view of the above, and because the period for reply is still within the five (5) month extendable period for reply, the application is not abandoned, and the petition is dismissed as moot.

A two (2) month extension of time ($460) is needed to make the March 24, 2008 RCE timely. Applicants submitted $1050 for a three month extension of time. Accordingly, the difference of $590 will be refunded to petitioner under separate cover. In addition, the $1,540 petition fee will also be refunded to petitioner.

The matter is being forwarded to Group Art Unit 2163 for consideration of the RCE, filed March 3, 2008.

Telephone inquiries concerning this decision should be directed to the undersigned at (571)272-3207.

Cliff Congo
Petitions Attorney
Office of Petitions

10415835

SPE RESPONSE FOR CERTIFICATE OF CORRECTION

Paper No.: _____

DATE : 9-1-05

TO SPE OF : ART UNIT 3744

SUBJECT : Request for Certificate of Correction on Patent No.: 6871513

A response is requested with respect to the accompanying request for a certificate of correction.

Please complete this form and return with file, within **7** days to:
Palm location **7580, Certificates of Correction Branch – South Tower – 9A22**
If response is for an IFW, **return to employee (named below) via PUBSCofC Team in MADRAS.**
With respect to the change(s) requested, correcting Office and/or Applicant's errors, should the patent read as shown in the certificate of correction (COCIN)? No new matter should be introduced, nor should the scope or meaning of the claims be changed.

Valerie Jackson

Thank You For Your Assistance

Certificates of Correction Branch
Tel. No. 703-308-9390 ext. 114

The request for issuing the above-identified correction(s) is hereby:
Note your decision on the appropriate box.

- ☒ **Approved** — All changes apply.
- ☐ **Approved in Part** — Specify below which changes **do not** apply.
- ☐ **Denied** — State the reasons for denial below.

Comments:

Cheryl Tyler for

SPE 3744 **Art Unit**

UNITED STATES PATENT AND TRADEMARK OFFICE

Commissioner for Patents
United States Patent and Trademark Office
P.O. Box 1450
Alexandria, VA 22313-1450
www.uspto.gov

WILLIAM J. SAPONE
COLEMAN SUDOL SAPONE P.C.
714 COLORADO AVENUE
BRIDGE PORT CT 06605

COPY MAILED

MAR 16 2007

OFFICE OF PETITIONS

In re Application of	:	
Erich Shaw et al	:	
Application No. 10/415,844	:	DECISION GRANTING PETITION
Filed: January 12, 2004	:	UNDER 37 CFR 1.137(b)
Attorney Docket No. 696/9-1810	:	

This is a decision on the petition under 37 CFR 1.137(b), filed November 15, 2006, to revive the above-identified application.

The petition is **GRANTED**.

The petition satisfies the conditions for revival pursuant to the provisions of 37 CFR 1.137(b) in that (1) the reply in the form of an amendment; (2) the petition fee; and (3) the required statement of unintentional delay have been received. Accordingly, the reply to the Nonfinal Rejection of April 17, 2006, is accepted as having been unintentionally delayed.

Telephone inquiries concerning this decision should be directed to the undersigned at (571) 272-3208.

This matter is being referred to Technology Center AU 1744.

Karen Creasy

Karen Creasy
Petitions Examiner
Office of Petitions

UNITED STATES PATENT AND TRADEMARK OFFICE

COMMISSIONER FOR PATENTS
UNITED STATES PATENT AND TRADEMARK OFFICE
P.O. BOX 1450
ALEXANDRIA, VA 22313-1450
www.uspto.gov

27 AUG 2003

MUSERLIAN AND LUCAS AND MERCANTI, LLP
600 THIRD AVENUE
NEW YORK, NY 10016

In re Application of.	:	
Mass, et al.	:	
Application Serial No.: 10/415,845	:	
PCT No.: PCT/EP01/10863	:	DECISION ON PETITION UNDER
Intl. Filing Date: 20 September 2001	:	
Priority Date: 25 October 2000	:	37 CFR 1.137(b)
Attorney's Docket No.: 188.536	:	
For: VARIABLE VALVE TRAIN FOR LOAD	:	
CONTROL OF A SPARK-IGNITED INTERNAL	:	
COMBUSTION ENGINE	:	

This decision is in response to applicants' "PETITION FOR REVIVAL OF AN UNINTENTIONALLY ABANDONED APPLICATION", filed 01 May 2003.

BACKGROUND

On 20 September 2001, applicants filed international Application PCT/EP01/10863 which claimed priority to an earlier application filed on 25 October 2000. A demand for international preliminary examination, in which the United States was elected, was made on 7 March 2002 within nineteen months of the international filing date . Accordingly, pursuant to 37 CFR 1.495, the thirty month period for paying the basic national fee expired at midnight 25 April 2003.

On 01 May 2003, applicant filed a transmittal letter for entry into the national stage in the United States, which was accompanied by, inter alia,: the requisite basic national fee as required by 35 U.S.C. 371(c)(1), the petition fee , and a copy of the international application, a translation of the international application, an unexecuted oath or declaration, and preliminary amendment.

DISCUSSION

Under 37 CFR 1.137(b), a petition requesting that the application be revived on the grounds of unintentional delay must be filed promptly after applicant becomes aware of the abandonment and must be accompanied by: (1) the required reply, unless previously filed, (2) the petition fee required by law, (3) a statement that the entire delay in filing the required reply from the due date of the reply until the filing of a grantable petition was unintentional and (4) a terminal disclaimer (for applications filed before 8 June 1995).

As to item (1), the petition is accompanied by the required reply in the form of a check for the basic national filing fee . Deposit account 02-2275 will be charged $130.00 for the filing of an English translation after twenty or thirty months from the priority date.

As to item (2), the petition is accompanied by the required petition fee.

As to item (3), the petition is accompanied by applicants' statement that 'the entire delay in filing the required reply from the due date of the reply until the filing of a grantable petition was unintentional."

As to item (4), a terminal disclaimer is not required in the present case.

CONCLUSION

The petition under 37 CFR 1.137 (b) is **GRANTED**.

This application is being forwarded to the National Stage Processing Branch of the International Division to continue national stage processing of the present application, including preparation and mailing of the Notification of Missing Requirement Under 35 USC 371 requiring a properly executed oath or declaration as required by 35 USC 371(c)(4) and the surcharge for filing the oath or declaration later than thirty months from the priority date as required by 37 CFR 1.492(e).

Boris Milef
PCT Legal Examiner
PCT Legal Office

Telephone: (703) 305-0010
Facsimile: (703) 308-6459

Kenya A. McLaughlin
PCT Legal Office Detailee
PCT Legal Office

UNITED STATES PATENT AND TRADEMARK OFFICE

Commissioner for Patents
United States Patent and Trademark Office
P.O. Box 1450
Alexandria, VA 22313-1450
www.uspto.gov

01 DEC 2006

Patton Boggs LLP
8484 Westpark Drive
Suite 900
McLean, VA 22102

In re Application of	:	
CASTAN, Catherine et al.	:	
U.S. Application No.: 10/415,850	:	
PCT No.: PCT/FR01/03625	:	
Int. Filing Date: 19 November 2001	:	**DECISION**
Priority Date: 17 November 2000	:	
Attorney Docket No.: 022290.0114PTUS	:	
For: MEDICINE BASED ON ... FOR	:	
PREPARING USING SAME	:	

This is a decision on Request for Refund, filed in the United States Patent and Trademark Office on 20 October 2006.

BACKGROUND

On 01 May 2003, applicants filed papers for entry into the national stage of PCT/FR02/01745, which included the small entity fees of $477.00 for a national stage application.

On 21 March 2006, applicants filed an itemization letter, a fee transmittal and a credit card form, paying an additional $573.

On 20 October 2006, applicants filed this request for refund.

DISCUSSION

In the papers filed 20 October 2006, applicants requested a refund of the $573 paid in March. 37 CFR 1.28 (a) states:

> (a) *Refunds based on later establishment of small entity status.* A refund pursuant to § 1.26, based on establishment of small entity status, of a portion of fees timely paid in full prior to establishing status as a small entity may only be obtained if an assertion under § 1.27(c) and a request for a refund of the excess amount are filed within three months of the date of the timely payment of the full fee. The three-month time period is not extendable under § 1.136. Status as a small entity is waived for any fee by the failure to establish the status prior to paying, at the time of paying, or within three months of the date of payment of, the full fee.

Though applicants claim to have originally submitted the request for refund on 17 April 2006, such request is not present in the application, the postcard receipt of applicants is not date stamped by the Office to indicate receipt and the papers dated 17 April 2006 do not bear a certificate under 37 CFR 1.8. As such, the refund request has a receipt date of 20 October 2006, meaning it was received long past the three-month time period for requesting a refund.

CONCLUSION

For the above reason, applicants' request for a refund pursuant to 37 CFR 1.28(a) is **DISMISSED** without prejudice.

Any request for reconsideration of this matter should be filed within **TWO (2) MONTHS** of the mail date of this decision.

Further correspondence with respect to this matter should be addressed to the Mail Stop PCT, Commissioner for Patents, Office of PCT Legal Administration, P.O. Box 1450, Alexandria, Virginia 22313-1450, with the contents of the letter marked to the attention of the Office of PCT Legal Administration.

Erin P. Thomson

Erin P. Thomson
Attorney Advisor
PCT Legal Administration

Tel.: (571) 272-3292

0 8 JUN 2007

UNITED STATES PATENT AND TRADEMARK OFFICE

Commissioner for Patents
United States Patent and Trademark Office
P.O. Box 1450
Alexandria, VA 22313-1450
www.uspto.gov

Patton Boggs LLP
8484 Westpark Drive
Suite 900
McLean, VA 22102

In re Application of	:	
CASTAN, Catherine et al.	:	
U.S. Application No.: 10/415,850	:	
PCT No.: PCT/FR01/03625	:	
Int. Filing Date: 19 November 2001	:	**DECISION**
Priority Date: 17 November 2000	:	
Attorney Docket No.: 022290.0114PTUS	:	
For: MEDICINE BASED ON ... FOR	:	
PREPARING USING SAME	:	

This is a decision on applicant's renewed Request for Refund, filed in the United States Patent and Trademark Office on 19 April 2007.

BACKGROUND

On 01 December 2006, the Office mailed Decision on applicant's request for refund, refusing applicant's request as it was untimely.

On 19 April 2007, applicant submitted this renewed request, accompanied by a postcard receipt for the refund request applicant claims to have submitted 17 April 2006.

DISCUSSION

In the interim between the last decision being mailed on the refund request and applicant's latest renewed refund request, the 17 April 2006 refund request has been matched with the application. The 17 April 2006 request is timely. The $573 has been refunded to applicant's credit card.

CONCLUSION

For the above reason, applicants' request for a refund pursuant to 37 CFR 1.28(a) is **GRANTED**.

This application is being referred to the National Stage Processing Branch of the Office of PCT Operations for further action consistent with this decision.

Erin P. Thomson

Erin P. Thomson
Attorney Advisor
PCT Legal Administration

Tel.: (571) 272-3292

UNITED STATES PATENT AND TRADEMARK OFFICE

Commissioner for Patents
United States Patent and Trademark Office
P.O. Box 1450
Alexandria, VA 22313-1450
www.uspto.gov

FISH & RICHARDSON PC
P.O. BOX 1022
MINNEAPOLIS MN 55440-1022

MAILED

SEP 25 2009

OFFICE OF PETITIONS

In re Patent No. 7,478,047 Loyall et al. Issue Date: January 13, 2009 Application No. 10/415,851 Filed: November 14, 2003 Attorney Docket No. 12888-009US1 Title: Interactive Character System	DECISION ON REQUEST FOR RECONSIDERATION OF PATENT TERM ADJUSTMENT

This is a decision on the "APPLICATION FOR PATENT TERM ADJUSTMENT UNDER 37 C.F.R. §1.705(d)", filed March 13, 2009. Patentees request the final Patent Term Adjustment calculation to increase from 328 days to 789 days.

The application for reconsideration of patent term adjustment is **GRANTED** to the extent indicated herein.

The patent term adjustment indicated on the patent is to be corrected by issuance of a certificate of correction showing a revised Patent Term Adjustment of **five hundred twenty (520) days**.

The above-identified application matured into U.S. Patent No. 7,478,047 on January 13, 2009. The patent issued with a patent term adjustment of 328 days. This request for reconsideration of patent term adjustment was timely filed within two months of the issue date of the patent. See, 37 CFR 1.705(d). Patentees request that the patent term adjustment determination for the above-identified patent be changed from 328 days to 789 days.

Patentee requests recalculation of the patent term adjustment based on the decision in Wyeth v. Dudas, 580 F. Supp. 2d 138, 88 U.S.P.Q. 2d 1538 (D.D.C. 2008). Patentees assert that pursuant

to Wyeth, patentees are entitled to a patent term adjustment of 789 days as the 266 days of examination delay pursuant to 37 CFR 1.702(a) do not overlap with the 841 days of over three year delay pursuant to 37 CFR 1.702(b) as these periods do not occur on the same day. Thus, patentees request that the determination of patent term adjustment be increased by 461 days to a total of seven hundred eighty-nine (789) days (the sum of the period of three-year delay (841 days) and the period of examination delay (266 days) less 318 days of applicant delay).

As stated in 37 CFR 1.703(b), the period of adjustment under § 1.702(b) is the number of days in the period beginning on the day after the date that is three years after the date on which the application was filed under 35 U.S.C. 111(a) or the national stage commenced under 35 U.S.C. 371(b) or (f) in an international application and ending on the date a patent was issued, but not including the sum of the periods under § 1.703(b)(1)-(4). While the date of completion of all 35 U.S.C. 371 requirements, November 14, 2003, is the date used in calculating examination delay under 37 CFR 1.703(a), the date the national stage commenced under 35 U.S.C. 371(b), Monday, May 5, 2003,[1] is used in determining the Three Year Delay under 37 CFR 1.703(b).

Pursuant to 37 CFR 1.703(b)(1), the period of adjustment under 37 CFR 1.702(b) should be 838 days, counting the number of days beginning on the day after the date that is three years after the date on which the national stage commenced under 35 U.S.C. 371(b), May 6, 2006, and ending on the date the request for continued examination was filed, August 21, 2008.

At issue is whether patentees should accrue 838 days of patent term adjustment for the Office taking in excess of three years to issue the patent, as well as 266 days for Office failure to take certain actions within specified time frames (or examination delay).

The Office contends that 266 days overlap. Patentees' calculation of the period of overlap is inconsistent with the Office's interpretation of this provision. 35 U.S.C. 154(b)(2)(A) limits the adjustment of patent term, as follows:

---

[1] It is noted that May 3, 2003 fell on a Saturday. Thus, the date the national stage commenced under 35 U.S.C. 371(b) is Monday, May 5, 2003.

> to the extent that the periods of delay attributable to grounds specified in paragraph (1) overlap, the period of any adjustment granted under this subsection shall not exceed the actual number of days the issuance of the patent was delayed.

Likewise, 37 CFR 1.703(f) provides that:

> To the extent that periods of delay attributable to the grounds specified in §1.702 overlap, the period of adjustment granted under this section shall not exceed the actual number of days the issuance of the patent was delayed.

As explained in *Explanation of 37 CFR 1.703(f) and of the United States Patent and Trademark Office Interpretation of 35 U.S.C. 154(b)(2)(A)*, 69 Fed. Reg. 34283 (June 21, 2004), the Office interprets 35 U.S.C. 154(b)(2)(A) as permitting either patent term adjustment under 35 U.S.C. 154(b)(1)(A)(i)-(iv), or patent term adjustment under 35 U.S.C. 154(b)(1)(B), but not as permitting patent term adjustment under both 35 U.S.C. 154(b)(1)(A)(i)-(iv) and 154(b)(1)(B). Accordingly, the Office implements the overlap provision as follows:

> If an application is entitled to an adjustment under 35 U.S.C. 154(b)(1)(B), the entire period during which the application was pending (except for periods excluded under 35 U.S.C. 154(b)(1)(B)(i)-(iii)), and not just the period beginning three years after the actual filing date of the application, is the period of delay under 35 U.S.C. 154(b)(1)(B) in determining whether periods of delay overlap under 35 U.S.C. 154(b)(2)(A). Thus, any days of delay for Office issuance of the patent more than 3 years after the filing date of the application, which overlap with the days of patent term adjustment accorded prior to the issuance of the patent will not result in any additional patent term adjustment. See 35 U.S.C. 154(b)(1)(B), 35 U.S.C. 154(b)(2)(A), and 37 CFR § 1.703(f). See *Changes to Implement Patent Term Adjustment Under Twenty Year Term; Final Rule*, 65 Fed. Reg. 56366 (Sept. 18, 2000). See also *Revision of Patent Term Extension and Patent Term Adjustment Provisions; Final Rule*, 69 Fed. Reg. 21704 (April 22, 2004), 1282 Off. Gaz. Pat. Office 100 (May 18, 2004). See also *Explanation of 37 CFR 1.703(f) and of the United States Patent and Trademark*

Office Interpretation of 35 U.S.C. 154(b)(2)(A), 69 Fed. Reg. 34283 (June 21, 2004).

As such, the period for over 3 year pendency does not overlap only to the extent that the actual dates in the period beginning three years after the date on which the application commenced overlap with the actual dates in the periods for failure of the Office to take action within specified time frames.

In this instance, the relevant period under 35 U.S.C. 154(b)(1)(B) in determining whether periods of delay "overlap" under 35 U.S.C. 154(b)(2)(A) is the entire period during which the national stage commenced, May 5, 2003, to the filing of the RCE on August 21, 2008. 266 days of patent term adjustment were accorded prior to the filing of the RCE for Office delay pursuant to 37 CFR §1.702(a)(1). Entry of both 838 days pursuant to 37 CFR §1.702(b) and 266 days pursuant to 37 CFR §1.702(a) is neither permitted nor warranted. The Office did not delay 838 days and then another 266 days. The greater period, 838 days, is the actual number of days issuance of the patent was delayed by the Office. All but 572 days of the periods pursuant to 37 CFR §§1.702(a) and 1.702(b) overlap. Accordingly, at issuance the Office should have entered an additional 572 days (not 380 days) of patent term adjustment for taking in excess of three months to issue the patent for a total Office delay of 838 days.

The period of adjustment of 380 days will be removed and a period of adjustment of 572 days will be entered.

In view thereof, the patent term adjustment indicated on the patent should be five hundred twenty **(520) days** ((266 + 572) - 318) days.

The Office acknowledges submission of the $200.00 fee set forth in 37 CFR 1.18(e). No additional fees are required.

Patentees are given THIRTY (30) DAYS or ONE (1) MONTH, whichever is longer, from the mail date of this decision to respond to this decision. No extensions of time will be granted under § 1.136.

The application file is being forwarded to the Certificates of Correction Branch for issuance of a certificate of correction in order to rectify this error. The Office will issue a

certificate of correction indicating that the term of the above-identified patent is extended or adjusted by five hundred twenty (520) days.

Telephone inquiries specific to this matter should be directed to Petitions Attorney Charlema Grant, at (571) 272-3215.

Christina Partee Donnell for

Anthony Knight
Supervisor
Office of Petitions

Enclosure: Copy of DRAFT Certificate of Correction

.UNITED STATES PATENT AND TRADEMARK OFFICE

Commissioner for Patents
United States Patent and Trademark Office
P.O. Box 1450
Alexandria, VA 22313-1450
www.uspto.gov

MAILED

MAR 25 2010

OFFICE OF PETITIONS

FISH & RICHARDSON PC
P.O. BOX 1022
MINNEAPOLIS MN 55440-1022

In re Patent No. 7,478,047 Loyall et al. Issue Date: January 13, 2009 Application No. 10/415,851 Filed: November 14, 2003 Attorney Docket No. 12888-009US1 Title: INTERACTIVE CHARACTER SYSTEM	DECISION ON REQUEST FOR RECONSIDERATION OF PATENT TERM ADJUSTMENT AND NOTICE OF INTENT TO ISSUE CERTIFICATE OF CORRECTION

This is a decision on the petition filed on October 22, 2009, which is being treated as a petition under 37 CFR 1.181 requesting that the patent term adjustment indicated on the above-identified patent be corrected to indicate that the term of the above-identified patent is extended or adjusted by seven hundred eighty-nine (789) days. The petition was filed within two months of a decision by the Office mailed on September 24, 2009 dismissing in part applicants' request for reconsideration of PTA under 37 CFR 1.705(d).

The petition to correct the patent term adjustment indicated on the above-identified patent to indicate that the term of the above-identified patent is extended or adjusted by seven hundred eighty-six (786) days is **GRANTED to the extent indicated herein.**

The calculation is based on the commencement date of May 5, 2006. Since the commencement date fell on a weekend (May 3, 2003) and the requirements for early commencement were not met, the next business day is used for calculating delay pursuant to 37 CFR 1.703(b).

In addition, as the period from the filing date of the request for continued examination (RCE) to the issue date of the patent is not included in the "B" delay period, the over three year period begins on May 6, 2006 and ends on August 20, 2008, the

day before the RCE was filed, and is 838 days. See, 35 U.S.C. 154(b)(1)(B)(i). As such, the patent term adjustment is 786, not 789 days.

The Office will *sua sponte* issue a certificate of correction. Pursuant to 37 CFR 1.322, the Office will not issue a certificate of correction without first providing assignee or patentee an opportunity to be heard. Accordingly, patentees are given **one (1) month or thirty (30) days**, whichever is longer, from the mail date of this decision to respond. No extensions of time will be granted under § 1.136.

The Office acknowledges the previous submission of the $200.00 fee set forth in 37 CFR 1.18(e). No additional fees are required.

The application is being forwarded to the Certificate of Correction Branch for issuance of a certificate of correction. The Office will issue a certificate of correction indicating that the term of the above-identified patent is extended or adjusted by **seven hundred eighty-six (786)** days.

Telephone inquiries specific to this matter should be directed to Petitions Attorney, Charlema Grant at (571) 272-3215.

/ALESIA M. BROWN/

Alesia M. Brown
Petitions Attorney
Office of Petitions

Enclosure: Copy of DRAFT Certificate of Correction

UNITED STATES PATENT AND TRADEMARK OFFICE

CERTIFICATE OF CORRECTION

PATENT : 7,478,047 B2

DATED : **January 13, 2009** **DRAFT**

INVENTOR(S) : Loyall et al.

It is certified that error appears in the above-identified patent and that said Letters Patent is hereby corrected as shown below:

On the cover page,

[*] Notice: Subject to any disclaimer, the term of this patent is extended or adjusted under 35 USC 154(b) by 520 days

Delete the phrase "by 520 days" and insert – by 786 days--

30 SEP 200

#7

UNITED STATES PATENT AND TRADEMARK OFFICE

COMMISSIONER FOR PATENTS
UNITED STATES PATENT AND TRADEMARK OFFICE
P.O. BOX 1450
ALEXANDRIA, VA 22313-1450
www.uspto.gov

Bayer Polymers LLC
100 Bayer Road
Pittsburgh, PA 15205

In re Application of	:	
BEHRENS, Hans-Josef, et al.	:	DECISION ON
Application No.: 10/415,870	:	
PCT No.: PCT/EP01/12261	:	REQUEST
Int. Filing Date: 24 October 2001	:	
Priority Date: 06 November 2000	:	UNDER 37 CFR §§1.42 and 1.43
Attorney's Docket No.: P07767/LeA 3434831	:	
For: OPTICAL WAVEGUIDE	:	

This is a decision on applicants' "Submission of Missing Parts," filed in the United States Patent and Trademark Office on 27 August 2003. The declaration contains an indication that joint inventor Heinz Dieter Brandt is deceased. As such, it has been treated as a request for status under 37 CFR 1.42.

BACKGROUND

On 24 October 2001, applicants filed international application PCT/EP01/12261, which claimed a priority date of 06 November 2000. A copy of the international application was communicated to the United States Patent and Trademark Office (USPTO) from the International Bureau on 10 May 2002. On 15 May 2002, a demand for international preliminary examination was filed within nineteen months from the priority date. As such, the deadline for entry into the national stage in the United States was 06 May 2003.

On 02 May 2003, applicants filed a submission for entry into the national stage in the United States which was accompanied by, *inter alia*, the U.S. Basic National Fee.

On 15 August 2003, the Office mailed Notification of Missing Requirements (Form PCT/DO/EO/905) indicating, *inter alia*, that an oath or declaration in compliance with 37 CFR 1.497(a)-(b) and the surcharge for late filing of the oath or declaration were required.

On 27 August 2003, applicants submitted "Submission of Missing Parts" accompanied by a declaration.

DISCUSSION

Under 35 U.S.C. §117, legal representatives of deceased inventors may make application for patent upon compliance with the requirements and on the same terms and conditions applicable to the inventor. The "legal representative (executor, administrator, etc.) of the deceased inventor may make the necessary oath or declaration, and apply for and obtain the patent." 37 CFR 1.42. However, the declaration must include the signature of the legal

representative or the signature of all of the heirs (or if there is only one heir, the sole heir), if under applicable law, the heirs' authority corresponds to that of a legal representative. See MPEP 409.01(d).

The 27 August 2003 declaration lists Martina Brandt, Franziska Hanne Brandt and Inken Margarethe Brandt as heirs and lists the citizenship, residence and postal address for each heir and for inventor Brandt. The declaration is signed by a guardian for the minor heirs of inventor Brandt. This is acceptable under 37 CFR 1.43. The Joint Certificate of Inheritance indicates that the heirs that executed the declaration are the only heirs of inventor Brandt. If this interpretation is incorrect, applicants must notify the Office immediately and provide a declaration executed by ALL of the heirs of inventor Brandt. The submission of the declaration signed by the heirs is construed as an indication that a legal representative has not been appointed nor is one required to be appointed by applicable law, and thus, the heirs are signing as the legal representative of the estate. See MPEP 409.01(d). If this interpretation is incorrect, applicants are required to promptly notify the Office of such and to submit a declaration properly executed by the legal representative of the deceased inventor in response to the decision. The declaration complies with 37 CFR 1.497(a)-(b).

CONCLUSION

For the above reasons, the request for status under 37 CFR 1.42 and 37 CFR 1.43 is **GRANTED**.

The application has an international filing date of 24 October 2001 under 35 U.S.C. §363 and a date of 27 August 2003 under 35 U.S.C. §371. This application is being forwarded to the National Stage Processing Division of the Office of the PCT Operations for continued processing.

Boris Milef
PCT Legal Examiner
PCT Legal Administration

Erin M. Pender
Attorney Advisor
PCT Legal Administration

Telephone: (703) 305-0455
Facsimile: (703) 308-6459

Under the Paperwork Reduction Act of 1995, no persons are required to respond to a collection of information unless it displays valid OMB control number.

PETITION TO ACCEPT UNINTENTIONALLY DELAYED PAYMENT OF MAINTENANCE FEE IN AN EXPIRED PATENT (37 CFR 1.378(c))

Patent Number	Issue Date (YYYY-MM-DD)	Application Number	Filing Date (YYYY-MM-DD)	Docket Number (if applicable)
6747038	2004-06-08	10415877	2003-05-02	

CAUTION: Maintenance fee (and surcharge, if any) payment must correctly identify: (1) the patent number and (2) the application number of the actual U.S. application leading to issuance of that patent to ensure the fee(s) is/are associated with the correct patent. 37 CFR 1.366(c) and (d).

SMALL ENTITY
☒ Patentee claims, or has previously claimed, small entity status. See 37 CFR 1.27.

LOSS OF ENTITLEMENT TO SMALL ENTITY STATUS
☐ Patentee is no longer entitled to small entity status. See 37 CFR 1.27(g)

NOT Small Entity		Small Entity	
Fee	Code	Fee	Code
○ 3 ½ year	(1551)	◉ 3 ½ year	(2551)
○ 7 ½ year	(1552)	○ 7 ½ year	(2552)
○ 11 ½ year	(1553)	○ 11 ½ year	(2553)

SURCHARGE
The surcharge required by 37 CFR 1.20(i)(2) (Fee Code 1558) must be paid as a condition of accepting unintentionally delayed payment of the maintenance fee.

MAINTENANCE FEE (37 CFR 1.20(e)-(g))
The appropriate maintenance fee must be submitted with this petition.

STATEMENT
THE UNDERSIGNED CERTIFIES THAT THE DELAY IN PAYMENT OF THE MAINTENANCE FEE TO THIS PATENT WAS UNINTENTIONAL

PETITIONER(S) REQUEST THAT THE DELAYED PAYMENT OF THE MAINTENANCE FEE BE ACCEPTED AND THE PATENT REINSTATED

THIS PORTION MUST BE COMPLETED BY THE SIGNATORY OR SIGNATORIES

37 CFR 1.378(d) states: "Any petition under this section must be signed by an attorney or agent registered to practice before the Patent and Trademark Office, or by the patentee, the assignee, or other party in interest."

I certify, in accordance with 37 CFR 1.4(d)(4) that I am

○ An attorney or agent registered to practice before the Patent and Trademark Office

◉ A sole patentee

○ A joint patentee; I certify that I am authorized to sign this submission on behalf of all the other patentees.

○ A joint patentee; all of whom are signing this e-petition

○ The assignee of record of the entire interest

Sole Patentee			
A signature of the applicant or representative is required in accordance with 37 CFR 1.33 and 10.18. Please see 37 CFR 1.4(d) for the form of the signature.			
Signature	/Bernd Clement/	Date (YYYY-MM-DD)	2008-07-29
Name	Prof. Dr. Bernd Clement		

This collection of information is required by 37 CFR 1.378(c). The information is required to obtain or retain a benefit by the public which is to file (and by the USPTO to process) an application. Confidentiality is governed by 35 U.S.C. 122 and 37 CFR 1.11 and 1.14. This collection is estimated to take 1 hour to complete, including gathering, preparing, and submitting the completed application form to the USPTO. Time will vary depending upon the individual case. Any comments on the amount of time you require to complete this form and/ or suggestions for reducing this burden, should be sent to the Chief Information Officer, U.S. Patent and Trademark Office, U.S. Department of Commerce, P.O. Box 1450, Alexandria, VA 22313-1450. DO NOT SEND FEES OR COMPLETED FORMS TO THIS ADDRESS. **This form can only be used when in conjunction with EFS-Web. If this form is mailed to the USPTO, it may cause delays in reinstating the patent.**

Privacy Act Statement

The Privacy Act of 1974 (P.L. 93-579) requires that you be given certain information in connection with your submission of the attached form related to a patent application or patent. Accordingly, pursuant to the requirements of the Act, please be advised that: (1) the general authority for the collection of this information is 35 U.S.C. 2(b)(2); (2) furnishing of the information solicited is voluntary; and (3) the principal purpose for which the information is used by the U.S. Patent and Trademark Office is to process and/or examine your submission related to a patent application or patent. If you do not furnish the requested information, the U.S. Patent and Trademark Office may not be able to process and/or examine your submission, which may result in termination of proceedings or abandonment of the application or expiration of the patent.

The information provided by you in this form will be subject to the following routine uses:

1. The information on this form will be treated confidentially to the extent allowed under the Freedom of Information Act (5 U.S.C. 552) and the Privacy Act (5 U.S.C. 552a). Records from this system of records may be disclosed to the Department of Justice to determine whether the Freedom of Information Act requires disclosure of these record s.

2. A record from this system of records may be disclosed, as a routine use, in the course of presenting evidence to a court, magistrate, or administrative tribunal, including disclosures to opposing counsel in the course of settlement negotiations.

3. A record in this system of records may be disclosed, as a routine use, to a Member of Congress submitting a request involving an individual, to whom the record pertains, when the individual has requested assistance from the Member with respect to the subject matter of the record.

4. A record in this system of records may be disclosed, as a routine use, to a contractor of the Agency having need for the information in order to perform a contract. Recipients of information shall be required to comply with the requirements of the Privacy Act of 1974, as amended, pursuant to 5 U.S.C. 552a(m).

5. A record related to an International Application filed under the Patent Cooperation Treaty in this system of records may be disclosed, as a routine use, to the International Bureau of the World Intellectual Property Organization, pursuant to the Patent Cooperation Treaty.

6. A record in this system of records may be disclosed, as a routine use, to another federal agency for purposes of National Security review (35 U.S.C. 181) and for review pursuant to the Atomic Energy Act (42 U.S.C. 218(c)).

7. A record from this system of records may be disclosed, as a routine use, to the Administrator, General Services, or his/her designee, during an inspection of records conducted by GSA as part of that agency's responsibility to recommend improvements in records management practices and programs, under authority of 44 U.S.C. 2904 and 2906. Such disclosure shall be made in accordance with the GSA regulations governing inspection of records for this purpose, and any other relevant (i.e., GSA or Commerce) directive. Such disclosure shall not be used to make determinations about individuals.

8. A record from this system of records may be disclosed, as a routine use, to the public after either publication of the application pursuant to 35 U.S.C. 122(b) or issuance of a patent pursuant to 35 U.S.C. 151. Further, a record may be disclosed, subject to the limitations of 37 CFR 1.14, as a routine use, to the public if the record was filed in an application which became abandoned or in which the proceedings were terminated and which application is referenced by either a published application, an application open to public inspections or an issued patent.

9. A record from this system of records may be disclosed, as a routine use, to a Federal, State, or local law enforcement agency, if the USPTO becomes aware of a violation or potential violation of law or regulation.

UNITED STATES PATENT AND TRADEMARK OFFICE

Commissioner for Patents
United States Patent and Trademark Office
P.O. Box 1450
Alexandria, VA 22313-1450
www.uspto.gov

In re Patent No. 6747038
Issue Date: June 8,2004
Application No. 10415877
Filed: May 2,2003
Attorney Docket No. ONC-6028

:
:DECISION GRANTING PETITION
:UNDER 37 CFR 1.378(c)
:

This is a decision on the electronic petition, filed July 29,2008 ,under 37 CFR 1.378(c) to accept the unintentionally delayed payment of the 3.5 year maintenance fee for the above-identified patent.

The petition is GRANTED.

The maintenance fee is accepted, and the above-identified patent reinstated as of July 29,2008 . This decision also constitutes notice that the fee has been accepted. An electronic copy of the petition and this decision has been created as an entry in an Image File Wrapper. Nevertheless, petitioner should print and retain an independent copy

Telephone inquires related to this electronic decision should be directed to the Electronic Business Center at 1-866-217-9197.

UNITED STATES PATENT AND TRADEMARK OFFICE

COMMISSIONER FOR PATENTS
UNITED STATES PATENT AND TRADEMARK OFFICE
P.O. BOX 1450
ALEXANDRIA, VA 22313-1450
www.uspto.gov

YOUNG & THOMPSON
745 SOUTH 23RD STREET
2ND FLOOR
ARLINGTON, VA 22202

COPY MAILED

JUL 26 2007

OFFICE OF PETITIONS

In re Application of LANFRANCHI Application No.: 10/415,879 Filing Date: May 1, 2003 Attorney Docket No.: 2553-1028	: : : : :	DECISION ON PETITION UNDER 37 CFR 1.137(B)

This is a decision on the petition under 37 CFR 1.137(b), filed March 15, 2007, to revive the above-identified application.

The petition is **GRANTED.**

The above-identified application became abandoned for failure to submit the issue fee and publication fee in a timely manner in reply to the Notice of Allowance mailed June 30, 2005, which set a statutory period for reply of three (3) months. Accordingly, by operation of law, the above-identified application became abandoned on October 1, 2005.

The petition satisfies the conditions for revival pursuant to the provisions of 37 CFR 1.137(b) in that (1) the reply in the form of payment of the issue fee and publication fee; (2) the petition fee; and (3) the required statement of unintentional delay have been received. Accordingly, the payment of the issue fee and publication fee is accepted as having been unintentionally delayed.

This application is being referred to the Office of Publications.

Telephone inquiries concerning this decision should be directed to the undersigned at (571) 272-3303.

Bryan Lin

Bryan Lin
Legal Examiner
Office of the Deputy Commissioner
for Patent Examination Policy

14 SEP 2004

UNITED STATES PATENT AND TRADEMARK OFFICE

COMMISSIONER FOR PATENTS
UNITED STATES PATENT AND TRADEMARK OFFICE
P.O. BOX 1450
ALEXANDRIA, VA 22313-1450
www.uspto.gov

OBLON, SPIVAK, McCLELLAND, MAIER & NEUSTADT, PC
1940 Duke Street
Alexandria, VA 22314

In re Application of	:	
OGIMURA, Yoshio *et al*	:	
U.S. Application No.: 10/415,889	:	
PCT No.: PCT/JP01/09843	:	**DECISION ON**
Int. Filing Date: 09 November 2001	:	**REQUEST FOR REFUND**
Priority Date: 09 November 2000	:	
Docket No.: 237481US3PCT	:	
For: PASSENGER CONVEYER SYSTEM	:	

This decision is in response to applicants' request for a refund of the $290.00 fee for a multiple dependent claim which is hereby **DISMISSED**.

Section 1893.01(c) of the Manual Patent Examining Procedure, states in part:

> A preliminary amendment accompanying the initial national stage submission under 35 U.S.C. 371 that cancels claims and/or eliminates multiple dependent claims will be effective to reduce the number of claims to be considered in calculating extra claim fees required under 37 CFR 1.492(b)-(c) and/or eliminate the multiple dependent claim fee required under 37 CFR 1.492(d). **A subsequently filed amendment canceling claims and/or eliminating multiple dependent claims will not entitle applicant to a refund of fees previously paid.**

In this case, the preliminary amendment was not submitted until 27 October 2003. The national stage application was initially filed on 09 May 2003. Accordingly, a refund of the multiple dependent claim fee is not warranted.

Any further correspondence with respect to this matter deposited with the United States Postal Service should be addressed to the Mail Stop PCT, Commissioner for Patents, Office of PCT Legal Administration, P.O. Box 1450, Alexandria, Virginia 22313-1450, marked to the attention of the Office of PCT Legal Administration.

James Thomson
Attorney Advisor
Office of PCT Legal Administration

Tel.: (703) 308-645;
(571) 273-3302 (after 30 September 2004)

UNITED STATES PATENT AND TRADEMARK OFFICE

Commissioner for Patents
United States Patent and Trademark Office
P.O. Box 1450
Alexandria, VA 22313-1450
www.uspto.gov

STRIKER, STRIKER & STENBY
103 EAST NECK ROAD
HUNTINGTON, NY 11743

COPY MAILED

FEB 2 0 2007

OFFICE OF PETITIONS

In re Application of	:	
Harold Bux et al	:	
Application No. 10/415,895	:	DECISION ON PETITION
Filed: May 6, 2005	:	
Attorney Docket No. M1103.70152US01	:	

This is a decision on the petition, filed August 11, 2006, which is being treated as a petition under 37 CFR 1.8(b), requesting withdrawal of the holding of abandonment in the above-identified application.

The petition is **DISMISSED**.

This application was held abandoned for failure to timely respond to the non-final Office action of November 30, 2005, which set a three (3) month shortened statutory period for reply. Accordingly, a reply was due on or before February 28, 2006. A Notice of Abandonment was mailed on July 10, 2006.

Petitioner states that a timely reply was filed via certificate of facsimile transmission on February 27, 2006, which included the following papers:. a certificate of facsimile transmission dated February 27, 2006 for an amendment. Petitioner has submitted a copy of the previously transmitted correspondence, which bears a certificate of facsimile transmission dated February 27, 2006, which would have rendered the reply timely if received. The certificate of facsimile transmission is signed by petitioner herein.

The file record does not include the originally submitted papers. Failure to receive correspondence which includes a certificate of mailing or certificate of facsimile transmission is addressed in 37 CFR 1.8(b), reproduced below:

> In the event that correspondence is considered timely filed by being mailed or transmitted in accordance with paragraph (a) of this section, but not received in the U.S. Patent and Trademark Office after a reasonable amount of time has elapsed from the time of mailing or transmitting of the correspondence, or after the application is held to be abandoned, or after the proceeding is

dismissed, terminated, or decided with prejudice, the correspondence will be considered timely if the party who forwarded such correspondence:

(1) Informs the Office of the previous mailing or transmission of the correspondence promptly after becoming aware that the Office has no evidence of receipt of the correspondence;

(2) Supplies an additional copy of the previously mailed or transmitted correspondence and certificate; and

(3) Includes a statement which attests on a personal knowledge basis or to the satisfaction of the Director to the previous timely mailing or transmission. **If the correspondence was sent by facsimile transmission, a copy of the sending unit's report confirming transmission may be used to support this statement.**

The petition fails to satisfy item (3) above. When correspondence is filed by facsimile transmission, the sender receives a transmission report. The petition does not include a copy of the transmission report, which would support a showing that the reply asserted to have been transmitted on February 27, 2006 was or was not successfully sent. Accordingly, as all the corroborating evidence in accordance with 37 CFR 1.8(b)(3) has not been supplied, the holding of abandonment will not be withdrawn at this time.

If the evidence necessary to establish the timely filing by facsimile transmission of the reply to the November 30, 2005 non-final Office action cannot be provided or petitioner does not wish to, a petition under 37 CFR 1.137(b) should be promptly submitted to avoid any issue of intentional delay in this application.

Further correspondence with respect to this matter should be addressed as follows:

By Mail: Mail Stop PETITION
Commissioner for Patents
P. O. Box 1450
Alexandria, VA 22313-1450

By hand: U. S. Patent and Trademark Office
Customer Service Window, Mail Stop Petitions
Randolph Building
401 Dulany Street
Alexandria, VA 22314

The centralized facsimile number is **(571) 273-8300.**

Telephone inquiries concerning this decision should be directed to the undersigned at (571) 272-3218.

Frances Hicks
Petitions Examiner
Office of Petitions

UNITED STATES PATENT AND TRADEMARK OFFICE

Commissioner for Patents
United States Patent and Trademark Office
P.O. Box 1450
Alexandria, VA 22313-1450
www.uspto.gov

STRIKER, STRIKER & STENBY
103 EAST NECK ROAD
HUNTINGTON, NY 11743

COPY MAILED

DEC 1 2 2007

OFFICE OF PETITIONS

In re Application of	:	
Harold Bux et al	:	
Application No. 10/415,895	:	DECISION ON PETITION
Filed: May 6, 2003	:	
Attorney Docket No. M1103.70152US01	:	
PGPUB Date: February 26, 2004		

This is a decision on the petition, filed February 27, 2007, which is being treated as a petition under 37 CFR 1.8(b), requesting withdrawal of the holding of abandonment in the above-identified application.

The petition is **DISMISSED**.

This application was held abandoned for failure to timely respond to the non-final Office action of November 30, 2005, which set a three (3) month shortened statutory period for reply. Accordingly, a reply was due on or before February 28, 2006. A Notice of Abandonment was mailed on July 10, 2006.

In reply to the adverse decision of February 20, 2007, which inter alia, required a copy of the Sending Unit's transmission confirmation report, which would have been generated February 27, 2006, petitioner asserts that while it was retained temporarily, it was not extant almost 1 year later. In the alternative, petitioner relies upon a copy of counsel's office docket records for the mailing and faxing of documents on February 27, 2006, as corroborative of the assertions in the petition.

The failure to provide the sending unit's report does not ease petitioner's burden. The reply is asserted to have been transmitted in late February 2006; the Notice of Abandonment was mailed less than 5 months later in July 2006, and the first petition was filed August 11, 2006. It is not clear why the Sending Unit report did not accompany the first. Petition under 37 CFR 1.8(b), a mere 5months after the contested date. Moreover, given the noticeable lack of any USPTO receipt of a reply which was readily discernable in both PUBLIC PAIR (this application was published in 2004) and PRIVATE PAIR it is not clear why petitioner did not notify the Office of the apparent non receipt of the previously submitted correspondence, per MPEP 512, subsection IV:

> 37 CFR 1.8(b) permits a party to notify the Office of a previous mailing, or transmitting, of correspondence when a reasonable amount of time has elapsed from the time of mailing or transmitting of the correspondence. In the event that correspondence may be considered timely filed because it was mailed or transmitted in accordance with 37 CFR 1.8(a), but was not received in the Office after a reasonable amount of time has elapsed, (e.g., more than one month from the time the correspondence was mailed), applicant is not required to wait until the end of the maximum extendable period for reply set in a prior Office action (for the Office to hold the application abandoned) before informing the Office of the previously submitted correspondence. Applicant may notify the Office of the previous mailing or transmission and supply a duplicate copy of the previously mailed or transmitted correspondence and a statement attesting on a personal knowledge basis or to the satisfaction of the Director to the previous timely mailing or transmission. If the person signing the statement did not sign the certificate of mailing, then the person signing the statement should explain how they have firsthand knowledge of the previous timely mailing or transmission. Such a statement should be filed promptly after the person becomes aware that the Office has not received the correspondence.
>
> Before notifying the Office of a previously submitted correspondence that appears not to have been received by the Office, applicants are encouraged to check the private Patent Application Information Retrieval (PAIR) System to see if the correspondence has been entered into the application file.

Thus, petitioner's indication that the sending unit report was not maintained one year after the alleged date of transmission misses the point of the rule: an applicant does not have to wait for a forthcoming notice of abandonment, or even later, an adverse decision on a petition under 37 CFR 1.8(b), to make of record the sending unit's report. Indeed, it is unclear why the sending unit report would not have been kept until at least the paper was observed to have been entered into the IFW file history, or the lack of receipt of the transmission clarified. In any event, petitioner's failure to make or maintain adequate business records under 37 CFR 1.8 does not warrant relief under that rule. See Krahn v. Commissioner, 15 USPQ2d 1823, 1825 (D.C. E. VA. 1990). The certificate of mailing or transmission procedure set forth in the USPTO's regulations was specifically designed to provide applicants with a simple mechanism to protect themselves from precisely the situation which has allegedly arisen in this case. Therefore, the regulation, as well as prudence, dictates that an applicant must comply with the provisions of 37 CFR 1.8 if he wishes to secure the advantages of the certificate of mailing or transmission procedure. Id. The copy of the firm's log book for mailing and facsimile transmission is merely a recital of the usual and ordinary procedures in place in counsel's firm, which does not provide an adequate basis for relief under the rule. Id. The procedure set out in the PTO's regulations is designed to provide the type of direct evidence needed to prove when an allegedly lost

amendment was sent to and received at the USPTO. The sending unit report has been acceptable direct evidence of the successful transmission since both the Notice of Proposed Rulemaking which added facsimile transmission to Rule 8 as reported at 57 F.R. 36034 (Aug.12, 1992), and the final Notice of Rulemaking, 58 F.R. 54494 (Oct.22, 1993).

As noted previously, if the evidence necessary to establish the timely filing by facsimile transmission of the reply to the November 30, 2005 non-final Office action cannot be provided or petitioner does not wish to, a petition under 37 CFR 1.137(b) should be promptly submitted to avoid any issue of intentional delay in this application.

Further correspondence with respect to this matter should be addressed as follows:

By Mail: Mail Stop PETITION
Commissioner for Patents
P. O. Box 1450
Alexandria, VA 22313-1450

By hand: U. S. Patent and Trademark Office
Customer Service Window, Mail Stop Petitions
Randolph Building
401 Dulany Street
Alexandria, VA 22314

The centralized facsimile number is **(571) 273-8300.**

Telephone inquiries concerning this decision should be directed to the undersigned at (571) 272-3217.

Brian Hearn
Petitions Examiner
Office of Petitions

UNITED STATES PATENT AND TRADEMARK OFFICE

Commissioner for Patents
United States Patent and Trademark Office
P.O. Box 1450
Alexandria, VA 22313-1450
www.uspto.gov

Striker Striker & Stenby
103 East Neck Road
Huntington NY 11743

COPY MAILED

MAR 1 2 2008

OFFICE OF PETITIONS

In re Application of	:	
Harald Bux et al.	:	
Application No. 10/415,895	:	ON PETITION
Filed: May 6, 2003	:	
Attorney Docket No. 2548	:	

This is a decision on the petition under 37 CFR 1.137(b), filed December 19, 2007, to revive the above-identified application.

The petition is **GRANTED**.

The above-identified application became abandoned for failure to submit a response to the non-final Office action mailed November 30, 2005, which set a shortened statutory period for reply of three (3) months. Accordingly, by operation of law, the above-identified application became abandoned on February 28, 2006.

The petition satisfies the conditions for revival pursuant to the provisions of 37 CFR 1.137(b) in that (1) the reply in the form of an amendment; (2) the petition fee of $1,540; and (3) the required statement of unintentional delay have been received. Accordingly, the issue fee is accepted as having been unintentionally delayed.

Telephone inquiries concerning this decision should be directed to Carl Friedman at (571) 272-6842.

The application file is being referred to Technology Center Art Unit 3682 for consideration of the amendment filed December 19, 2007 in due course.

David Bucci
Petitions Examiner
Office of Petitions

UNITED STATES PATENT AND TRADEMARK OFFICE

Commissioner for Patents
United States Patent and Trademark Office
P.O. Box 1450
Alexandria, VA 22313-1450
www.uspto.gov

VINCENT LAUER
1 VILLA DE BEAUTE
94130 NOGENT SUR MARNE
FRANCE

COPY MAILED

OCT 23 2006

OFFICE OF PETITIONS

In re Application of	:	DECISION ON
Lauer	:	
Application No.: 10/415,897	:	
Int. App. No: PCT/FR01/03394	:	PETITION UNDER
Int. Filing Date: 02 November 2001	:	
Priority Date: 06 November 2000	:	37 CFR 1.137(b)
Docket No.: N/A	:	
For: Microscope For Diffracting Objects	:	

This is a decision on the petition under 37 CFR 1.137(b), filed on July 10, 2006.

The petition is **DISMISSED**.

Any request for reconsideration of this decision must be submitted within **TWO (2) MONTHS** from the mail date of this decision. Extensions of time under 37 CFR 1.136(a) are permitted. The reconsideration request should include a cover letter entitled "Renewed Petition under 37 CFR 1.137(b)." This is **not** a final agency action within the meaning of 5 U.S.C. § 704.

This application became abandoned as of midnight on April 11, 2006 for failure to timely reply to the final Office action mailed on October 11, 2005. A Notice of Abandonment was mailed on May 17, 2006.

A grantable petition under 37 CFR 1.137(b) must be accompanied by: (1) the required reply, unless previously filed; (2) the petition fee as set forth in 37 CFR 1.17(m); (3) a statement that the entire delay in filing the required reply from the due date for the reply until the filing of a grantable petition pursuant to 37 CFR 1.137(b) was unintentional; and (4) any terminal disclaimer (and fee as set forth in 37 CFR 1.20(d)) required by 37 CFR 1.137(d). Where there is a question as to whether either the abandonment or the delay in filing a petition under 37 CFR 1.137 was unintentional, the Director may require additional information. See MPEP 711.03(c). The instant petition lacks item (1).

Although the petition states that the required reply "in the form of continuation application... is enclosed herewith," review of the application file reveals that no such reply is present. In the absence of the required reply to the final Office action mailed on October 11, 2005, it would be inappropriate to grant the requested relief at this time.

Further correspondence with respect to this matter should be addressed as follows:

By Mail: Mail Stop PETITION
Commissioner for Patents
P. O. Box 1450
Alexandria, VA 22313-1450

By hand: U. S. Patent and Trademark Office
Customer Service Window, Mail Stop Petitions
Randolph Building
401 Dulany Street
Alexandria, VA 22314

The centralized facsimile number is **(571) 273-8300.**

Telephone inquiries concerning this decision should be directed to the undersigned.

George Dombroske
PCT Legal Examiner
Office of PCT Legal Administration
on behalf of
Office of Petitions
Telephone: 571-272-3283
Facsimile: 571-273-0459

UNITED STATES PATENT AND TRADEMARK OFFICE

Commissioner for Patents
United States Patent and Trademark Office
P.O. Box 1450
Alexandria, VA 22313-1450
www.uspto.gov

14 MAR 2007

VINCENT LAUER
1 VILLA DE BEAUTE
94130 NOGENT SUR MARNE
FRANCE

In re Application of	:	
Lauer	:	DECISION ON
Application No.: 10/415,897	:	
Int. App. No: PCT/FR01/03394	:	PETITION UNDER
Int. Filing Date: 02 November 2001	:	
Priority Date: 06 November 2000	:	37 CFR 1.137(b)
Docket No.: N/A	:	
For: Microscope For Diffracting Objects	:	

This is a decision on the renewed petition under 37 CFR 1.137(b), filed on December 20, 2006.

DISCUSSION

In a Decision mailed on October 23, 2006, the petition under 37 CFR 1.137(b) filed on July 10, 2006 was dismissed, without prejudice, because

> Although the petition states that the required reply "in the form of continuation application... is enclosed herewith," review of the application file reveals that no such reply is present. In the absence of the required reply to the final Office action mailed on October 11, 2005, it would be inappropriate to grant the requested relief at this time.

In response, petitioner states that "The continuation papers were present in the reply as shown by the receipt postcard, a copy of which is enclosed, and by the filing receipt of the continuation application, a copy of which is also enclosed." Inspection of the copy of the filing receipt submitted by petitioner, for application no. 11/483,274, reveals that it was filed on July 10, 2006. Review of the Image File Wrapper (IFW) for application no. 11/483,274 reveals that the first sentence of its specification states in part that "This application is a continuation of U.S. Application no 10/415,897..." In view of the totality of the evidence now of record, it would be appropriate to construe the instant petition under 37 CFR 1.137(b) as a petition to revive the present application for purposes of establishing co-pendency with application no. 11/483,274. As such, petitioner has now satisfied requirement (1) under 37 CFR 1.137(b) by the filing of purported continuation application no. 11/483,274. As all of the requirements of 37 CFR 1.137(b) have now been satisfied, the petition is **GRANTED** for purposes of establishing co-pendency with application no. 11/483,274. Co-pendency having been established, this international application again stands **ABANDONED** with respect to the national stage in the United States.

CONCLUSION

The petition is **GRANTED** to the extent noted above.

This application is being forwarded to the Files Repository.

George Dombroske
PCT Legal Examiner
Office of PCT Legal Administration
Telephone: 571-272-3283
Facsimile: 571-273-0459

19 MAR 2004

#9

UNITED STATES PATENT AND TRADEMARK OFFICE

COMMISSIONER FOR PATENTS
UNITED STATES PATENT AND TRADEMARK OFFICE
P.O. BOX 1450
ALEXANDRIA, VA 22313-1450
www.uspto.gov

OLIFF & BERRIDGE
P.O. BOX 19928
ALEXANDRIA, VA 22320

In re Application of HOLMES et al.
Application No.: 10/415,903
PCT No.: PCT/GB01/05538
Int. Filing: 14 December 2001
Priority Date: 15 December 2000
Attorney Docket No.: 115862
For: DIFFUSE REFLECTOR AND METHOD

: DECISION ON PETITION
: UNDER 37 CFR 1.47(a)

This is a decision on applicant's petition under 37 CFR 1.47(a) filed in the United States Patent and Trademark Office (USPTO) on 01 December 2003. Applicant also requests a one month extension of time, which is granted.

BACKGROUND

On 05 May 2003, within thirty months of the priority date, applicant filed a transmittal letter (PTO-1390) requesting entry into the national stage in the United States of America under 35 U.S.C. § 371. Filed with the Transmittal Letter was, *inter alia*, the requisite basic national fee.

On 29 August 2003, a Notification of Missing Requirements was mailed to applicant indicating that an oath or declaration, in compliance with 37 CFR 1.497(a) & (b), and the surcharge for filing the oath or declaration after the thirty month period, was required.

On 01 December 2003, applicant filed a petition under 37 CFR 1.47(a) in an attempt to satisfy the requirements of 35 U.S.C. 371(c)(4). The petition requested the acceptance of the application without the signature of inventor Kenneth John Drinkwater. Applicant alleges that the inventor refuses to sign the application. The petition included the requisite petition fee, a declaration signed by the joint inventor Brian William Holmes on behalf of Kenneth John Drinkwater and a statement of facts under 37 CFR 1.47(a).

DISCUSSION

A petition under 37 CFR §1.47(a) must be accompanied by (1) the fee under 37 CFR §1.17(h), (2) factual proof that the non-signing joint inventor(s) refuses to execute the application or cannot be reached after diligent effort, (3) a statement of the last known address of the non-signing inventor(s), and (4) an oath or declaration by each available joint inventor on his or her own behalf and on behalf of the non-signing joint inventor(s).

Item (1) is satisfied with the payment of the $130 petition fee. Item (3) is satisfied because the last known address for non-signing inventor was provided. With regard to item (4), the declaration was executed by the available joint inventor on his behalf and on behalf of the non-signing inventor and satisfies the requirement of 37 CFR 1.47(a).

With respect to item (2), applicant's Statement of Facts Supporting Petition under 37 CFR 1.47(a) in support of applicant's allegation that inventor Drinkwater refuses to sign the application was submitted by Derek M. Wallace, Group Patent and Trademark Manager for De

La Rue, PLC. Based upon his first hand knowledge, Mr. Wallace attests that "On July 9, 2003, I sent a letter by mail to Dr. Drinkwater that included a copy of the patent application as filed in the United States, Declaration and Power of Attorney executed by the co-inventor Dr. Brian HOLMES, and an Assignment....sent to Dr. Drinkwater's last known address." (Wallace Decl., ¶4). Mr. Wallace also attests that "In reply to the July 9 letter, I received a note from Dr. Drinkwater on August 11, 2003 suggesting that Dr. Drinkwater believed he may not be an inventor of the subject matter of the above-identified patent application.(Wallace Decl., ¶5)... On September 10, 2003, I sent a registered letter to Dr. Drinkwater providing a detailed explanation of the reasons why Dr. Drinkwater is considered to be an inventor of the above-identified patent application...sent to Dr. Drinkwater's last known address."(Wallace Decl., ¶6). Mr. Wallace further states that a reply was not received to his September 10th communication; thus, on October 14, 2003, he forwarded that communication to Dr. Drinkwater at his business address, which was signed for. Mr. Wallace states that to date, Dr. Drinkwater has neither telephoned or returned any of the documents. (Wallace Decl., ¶8). In addition, copies of Mr. Wallace's 09 July 2003, 10 September 2003 and 14 October 2003 letters to Dr. Drinkwater and Dr. Drinkwater's 11 August 2003 reply communication were attached as exhibits to the declaration.

Under these circumstances, it can be concluded that Dr. Drinkwater's conduct constitutes a refusal to sign the application. The evidence submitted supports a finding that the nonsigning inventor refused to sign the application for the reasons set forth above. Accordingly, it is appropriate to accord the national stage application status under 37 CFR §1.47(a) at this time.

CONCLUSION

The petition under 37 CFR §1.47(a) is **GRANTED**.

The U.S. Designated/Elected Office is authorized to accept the application as a 37 CFR 1.47(a) application using the declaration filed 02 February 2004. The application has an international filing date of 14 December 2001 under 35 U.S.C. 363, and a date of 01 December 2003 under 35 U.S.C. 371(c)(1), (c)(2) and (c)(4).

As provided in 37 CFR 1.47(a), a notice of the filing of this application will be forwarded to the non-signing inventors at their respective last known address of record. Also, a notice of the filing of this application will be published in the Official Gazette.

The application is being returned to the International Division for processing as the U.S. National Stage of the above-identified international application.

Cynthia M. Kratz

Cynthia M. Kratz
Attorney Advisor
Office of PCT Legal Administration

Telephone: (703) 306-5467
Fax: (703)-308-6459

19 MAR 2004

UNITED STATES PATENT AND TRADEMARK OFFICE

COMMISSIONER FOR PATENTS
UNITED STATES PATENT AND TRADEMARK OFFICE
P.O. BOX 1450
ALEXANDRIA, VA 22313-1450
www.uspto.gov

DR. KENNETH JOHN DRINKWATER
46 GUILDFORD ROAD
FLEET, HAMPSHIRE, GU13 9EU
UNITED KINGDOM

In re Application of HOLMES et al.	:
Application No.: 10/415,903	:
PCT No.: PCT/GB01/05538	: DECISION ON PETITION
Int. Filing: 14 December 2001	:
Priority Date: 15 December 2000	: UNDER 37 CFR 1.47(a)
Attorney Docket No.: 115862	:
For: DIFFUSE REFLECTOR AND METHOD	:

Dear Dr. Drinkwater:

You are named as an inventor in the above identified United States patent application, filed under the provisions of 37 CFR 1.47(a) and 35 U.S.C. § 116. Should a patent be granted, you will be designated as an inventor.

As a named inventor, you are entitled to inspect any paper in the file wrapper of the application, order copies of all or any part thereof (at a prepaid cost per 37 CFR 1.19) or to make your position of record in the application. Alternatively, you may arrange to do any of the preceding through a registered patent agent or attorney presenting written authorization from you. If you care to join in the application, counsel of record (see below) would presumably assist you. Joining in the application would entail the filing of an appropriate oath or declaration by you pursuant to 37 CFR 1.63.

Cynthia M. Kratz

Cynthia M. Kratz
Attorney Advisor
PCT Legal Office

Telephone: (703) 306-5467

OLIFF & BERRIDGE
P.O. BOX 19928
ALEXANDRIA, VA 22320

UNITED STATES PATENT AND TRADEMARK OFFICE

Commissioner for Patents
United States Patent and Trademark Office
P.O. Box 1450
Alexandria, VA 22313-1450
www.uspto.gov

DANIEL A SCOLA JR
HOFFMAN & BARON
6900 JERICHO TURNPIKE
SYOSSET NY 11791

COPY MAILED
MAY 16 2006
OFFICE OF PETITIONS

In re Application of	:	
Woods, et al.	:	
Application No. 10/415,904	:	ON PETITION
Filed: May 5, 2003	:	
Attorney Docket No. 500-108 PCT/US	:	

This is a decision on the petition under 37 CFR 1.137(b), filed April 21, 2006. Applicants subsequently filed a request to withdraw the petition on May 2, 2006. However, in a telephone conversation with the undersigned on May 15, 2006, it was confirmed that the petition should be considered.

The petition is **GRANTED**.

The above-identified application became abandoned for failure to timely file a reply to the Notice to File Corrected Application Papers, mailed March 13, 2006, which set a non-extendable period for reply of thirty days for applicant to correct the specification. No reply to the Notice to File Corrected Application Papers having been received, the above-identified application became abandoned on April 14, 2006. Applicants filed a reply on April 17, 2006, after the application had already gone abandoned. The mailing of this decision precedes the mailing of a courtesy Notice of Abandonment.

With the instant petition, petitioner paid the petition fee, made the proper statement of unintentional delay, and submitted the required reply.

The file does not indicate a change of address has been submitted, although the address given on the petition differs from the address of record. If appropriate, a change of address should be filed in accordance with MPEP 601.03. A courtesy copy of this decision is being mailed to the address given on the petition; however, the Office will mail all future correspondence solely to the address of record.

The application file is being forwarded to the Office of Patent Publication for processing into a patent.

Telephone inquiries regarding this decision should be directed to the undersigned at (571)272-3207.

Cliff Congo
Petitions Attorney
Office of Petitions

cc: Hoffman & Baron
350 Jericho Turnpike
Jericho, NY 11753

22 JUL 2003

UNITED STATES PA[redacted] AND TRADEMARK OFFICE

#3

COMMISSIONER FOR PATENTS
UNITED STATES PATENT AND TRADEMARK OFFICE
P.O. BOX 1450
ALEXANDRIA, VA 22313-1450
www.uspto.gov

Wenderoth, Lind & Ponack, L.L.P.
2033 K Street, N.W., Suite 800
Washington, DC 20006-1021

In re Application of IRIE et al	:	
U.S. Application No.: 10/415,928	:	
PCT Application No.: PCT/JP01/04106	:	
Int. Filing Date: 17 May 2001	:	DECISION
Priority Date Claimed: (none)	:	
Attorney Docket No.: 2002-0575A	:	
For: DEVICE AND METHOD FOR PRESSURE	:	
CONTROL OF CARGO TANK OF	:	
LIQUEFIED NATURAL GAS CARRIER	:	

This is in response to applicant's "Petition Under 37 CFR §1.182 to Correct International Application Number Employed on National Phase Transmittal Letter to the United States Designated/Elected Office" filed 10 April 2003.

BACKGROUND

On 17 May 2001, applicant filed international application PCT/JP01/04106. A copy of the international application was communicated to the USPTO from the International Bureau on 28 November 2002. The thirty-month period for paying the basic national fee in the United States expired on 17 November 2003.

On 30 May 2002, applicant purported filed national stage papers in the United States Designated/Elected Office (DO/EO/US). The submission included a Transmittal Letter which referenced International Application Number PCT/JP01/04161.

On 11 April 2003, applicant filed the present petition under 37 CFR 1.182.

DISCUSSION

The petition states that the Transmittal Letter contained the incorrect International Application Number. Upon review of the application file, applicant's explanation for the error is accepted. Based on the copy of the return postcard receipt filed with the present petition, the national stage papers are entitled to a filing date of 30 May 2002. It is noted, however, that a

proper declaration was not submitted until 10 April 2003. Therefore, the application is entitled to a date under 35 U.S.C. 371(c) of 10 April 2003 instead of 30 May 2002.

CONCLUSION

For the reasons above, the petition under 37 CFR 1.182 is GRANTED.

The application has an International Filing Date under 35 U.S.C. 363 of 17 May 2001, and a date under 35 U.S.C. 371(c) of 10 April 2003.

This application is being forwarded to the United States Designated/Elected Office (DO/EO/US) for further processing in accordance with this decision, including according the copy of the national stage papers an original filing date of 30 May 2002.

Bryan Tung
PCT Legal Examiner
PCT Legal Office

Telephone: 703-308-6614
Facsimile: 703-308-6459

UNITED STATES PATENT AND TRADEMARK OFFICE

Commissioner for Patents
United States Patent and Trademark Office
P.O. Box 1450
Alexandria, VA 22313-1450
www.uspto.gov

COPY MAILED

SEP 2 4 2007

OFFICE OF PETITIONS

Morrison & Foerster LLP
1650 Tysons Boulevard
Suite 400
Mclean, VA 22102

In re Application of	:	
Klaus Hoffman	:	
Application No. 10/415,933	:	DECISION ON PETITION
Filed: May 5, 2003	:	TO WITHDRAW
Attorney Docket No. 449122053500	:	FROM RECORD
	:	

This is a decision on the Request to Withdraw as attorney or agent of record under 37 C.F.R. § 1.36(b), filed May 18, 2007.

The request is **NOT APPROVED** as moot.

A review of the file record indicates that the power of attorney to Morrison & Foerster LLP has been revoked by the assignee of the patent application on August 3, 2007. Accordingly, the request to withdraw under 37 C.F.R. § 1.36(b) is moot.

All future communications from the Office will continue to be directed to the below-listed address until otherwise notified by applicant.

Telephone inquires concerning this decision should be directed to Terri Williams at 571-272-2991.

T. Williams

Terri Williams
Petitions Examiner
Office of Petitions

cc: **Bell, Boyd & Lloyd, LLP**
P.O. Box 1135
Chicago, IL 60690

UNITED STATES PATENT AND TRADEMARK OFFICE

Commissioner for Patents
United States Patent and Trademark Office
P.O. Box 1450
Alexandria, VA 22313-1450
www.uspto.gov

COPY MAILED

OCT 0 2 2006

OFFICE OF PETITIONS

BIRCH STEWART KOLASCH & BIRCH
PO BOX 747
FALLS CHURCH, VA 22040-0747

In re Application of

LOPEZ-CANOVAS, et al.
Application No. 10/415,950
Filed: October 20, 2003
Attorney Docket No. 4565-0105P

DECISION ON PETITION
TO WITHDRAW
FROM RECORD

This is a decision on the Request to Withdraw as attorney or agent of record under 37 C.F.R. § 1.36(b), filed August 27, 2004 and re-submitted May 26, 2006.

The request is **APPROVED**.

A grantable request to withdraw as attorney/agent of record must be signed by every attorney/agent seeking to withdraw or contain a clear indication that one attorney is signing on behalf of another/others. A request to withdraw will not be approved unless at least 30 (thirty) days would remain between the date of approval and the later of the expiration date of a time to file a response or the expiration date of the maximum time period which can be extended under 37 C.F.R. § 1.136(a).

The request was signed by Charles Gorenstein on behalf of all attorneys of record who are associated with customer No. 02292. All attorneys/agents associated with the Customer Number 02292 have been withdrawn. Applicant is reminded that there is no attorney of record at this time.

The request to change the correspondence of record is not acceptable as the requested correspondence address is not that of: (1) the first named signing inventor; or (2) an intervening assignee of the entire interest under 37 C.F.R 3.71. All future communications from the Office will be directed to the first named signing inventor at the first copied address below until otherwise properly notified by the applicant.

In order to request or take action in a patent matter, the assignee must establish its ownership of the patent to the satisfaction of the Director. In this regard, a Statement under 37 CFR 3.73(b) must have either: (i) documentary evidence of a chain of title from the original owner to the assignee (*e.g.*, copy of an executed assignment), and a statement affirming that the documentary evidence of the chain of title from the original owner to the assignee was or concurrently is being submitted for recordation pursuant to § 3.11; or (ii) a statement specifying where documentary evidence of a chain of title from the original owner to the assignee is recorded in the assignment records of the Office (*e.g.*, reel and frame number).

Telephone inquiries concerning this decision should be directed to Monica A. Graves at 571-272-7253.

Amelia Au
Petitions Examiner
Office of Petitions

cc: **Lilia Lopez Conovas**
Calle 21 A No. 20614 Entre 206a Y 214
Atabey, Playa
Ciudad Habana, Cuba 12100

cc : **Centro Nacional De Investigaciones Cientificas (CNIC)**
Ave. 25 No. 15202 Esq. A158
Cubanacan, Playa Ciudad De La
Habana, Cuba 12100

UNITED STATES PATENT AND TRADEMARK OFFICE

UNITED STATES DEPARTMENT OF COMMERCE
United States Patent and Trademark Office
Address: COMMISSIONER FOR PATENTS
P.O. Box 1450
Alexandria, Virginia 22313-1450
www.uspto.gov

APPLICATION NUMBER	FILING OR 371 (c) DATE	FIRST NAMED APPLICANT	ATTY. DOCKET NO./TITLE
10/415,950	10/20/2003	Lilia Lopez-Canovas	4565-0105P

CONFIRMATION NO. 6799

OC000000020642238

02292
BIRCH STEWART KOLASCH & BIRCH
PO BOX 747
FALLS CHURCH, VA 22040-0747

Date Mailed: 09/29/2006

NOTICE REGARDING CHANGE OF POWER OF ATTORNEY

This is in response to the Power of Attorney filed 05/26/2006.

- The withdrawal as attorney in this application has been accepted. Future correspondence will be mailed to the new address of record. 37 CFR 1.33.

MONICA A GRAVES
OP (571) 272-7253

FORMER ATTORNEY/AGENT COPY

09 JUN 2006

UNITED STATES PATENT AND TRADEMARK OFFICE

Commissioner for Patents
United States Patent and Trademark Office
P.O. Box 1450
Alexandria, VA 22313-1450
www.uspto.gov

Glenn Patent Group
3475 Edison Way, Suite L
Menlo Park, CA 94025

In re Application of
STROBELT et al.
Application No.: 10/415,971
PCT No.: PCT/EP01/12647
Int. Filing Date: 31 October 2001
Priority Date: 03 November 2000
Atty. Docket No.: SCHO0145
For: DOSING DEVICE AND WRITING IMPLEMENT WITH A DOSING DEVICE

DECISION

This decision is issued in response to applicants' "Request for Corrected Filing Receipt and Notice of Acceptance" dated 10 June 2004. Applicants' request is being treated as a Petition under 37 CFR 1.181.

BACKGROUND

On 02 May 2003, applicant filed a Transmittal Letter (PTO-1390) requesting entry into the national stage in the United States of America under 35 U.S.C. 371. Filed with the Transmittal Letter were, *among other materials*, the requisite basic national fee; a copy of the international application; and a preliminary amendment.

On 23 September 2003, the United Stated Designated/Elected Office mailed a Notification of Missing Requirements under 35 U.S.C. 371 (Form PCT/DO/EO/905) indicating that an oath or declaration in compliance with 37 CFR 1.497(a) and (b) must be filed. Further, the notification indicated that the translation of the international application was defective. Specifically, the text in the drawings had not been translated. The notification set a two (2) month period for response. The notification set a two-month time limit in which to respond.

On 24 November 2003, applicants filed an executed declaration of inventors and a translation of international application via United States Postal Service Express Mail.

On 11 December 2003, the United States Designated/Elected Office (DO/EO/US) mailed a "Notification of Acceptance of Application under 35 U.S.C. 371 AND 37 CFR 1.495" (Form PCT/DO/EO/903) which set forth the date of receipt 35 U.S.C. 371(c)(1), (c)(2), and (c)(4) requirements as 25 November 2003 and a 35 U.S.C. 371 completion date of 25 November 2003.

On 10 June 2004, applicants filed "Request for Corrected Filing Receipt and Notice of Acceptance."

DISCUSSION

Applicants request a corrected filing date (or 371(c) date) from 25 November 2003 to 24 November 2003. The actual filing date of the present application is the international filing date, i.e., 31 October 2001. (See 35 U.S.C. 363) The date in the filing date portion on the filing receipt of a national stage application is the date upon which the requirements set forth in 35 U.S.C. 371(c) for entry into the national stage were completed. (See MPEP §1895.01) A review of the application file reveals that the declaration was filed with the USPTO on 24 November 2003, the date which the requirements set forth in 35 U.S.C. 371(c) for entry into the national stage was completed. Therefore, a corrected Notification of Acceptance and Official Filing Receipt which indicates a 35 U.S.C. 371(c)(1), (c)(2), and (c)(4) date of 24 November 2003 is proper since applicants completed the requirements set forth in 35 U.S.C. 371(c) on 24 November 2003. (Note MPEP section 1893.03(b)).

CONCLUSION

Applicants' request under 37 CFR 1.181 for issuance of a corrected Notification of Acceptance and Official Filing Receipt is **GRANTED**.

The Notification of Acceptance of Application Under 35 U.S.C. 371 and 37 CFR 1.494 or 1.495 (Form PCT/DO/EO/903) mailed on 11 December 2003 is hereby **VACATED**.

The application has an international filing date of 31 October 2001 under 35 U.S.C. 363 and a date of 24 November 2003 under 35 U.S.C. 371(c).

This application is being returned to the United States Designated/Elected Office (DO/EO/US) for treatment in accordance with this decision, that is, for mailing of a NOTIFICATION OF ACCEPTANCE OF APPLICATION (Form PCT/DO/EO/903) which identifies a date of 24 November 2003 under 35 U.S.C. 371(c) and preparation and mailing of a corrected Filing Receipt in accordance with this decision, that is a filing receipt that identifies a filing date of 24 November 2003.

Anthony Smith

Anthony Smith
Attorney-Advisor
Office of PCT Legal Administration
Tel.: 571-272-3298
Facsimile: 571-273-0459

UNITED STATES PATENT AND TRADEMARK OFFICE

Commissioner for Patents
United States Patent and Trademark Office
P.O. Box 1450
Alexandria, VA 22313-1450
www.uspto.gov

Patent No. : 7,354,542 B1
Serial No. : 10/415,974
Inventor(s) : Girgin
Issued : April 8, 2008
Title : **LIGHTWEIGHT, HEAT INSULATING, HIGH MECHANICAL STRENGTH SHAPED PRODUCT AND METHOD OF PRODUCING THE SAME**
Docket No. : **027564.00002**

Re: Request for Certificate of Correction

Consideration has been given your request for the issuance of a certificate of correction for the above-identified patent under the provisions of 37 CFR 1.322 and/or 1.323.

A petition under 37 CFR 3.81 must be filed and granted to fulfill your request, to date, there is no petition on record to consider your request.

Furthermore, Assignees' and/ or Co-assignees' names and addresses (assignment data) printed in a patent are based *solely* on information supplied in the appropriate space for identifying the assignment data, i.e., item 3 of the Fee(s) Transmittal Form PTOL-85B. After payment of the issue fee, correction of assignment data submitted on the PTOL-85B can only be done by Certificate of Correction under 37 CFR 1.323, which requires petition under 37 CFR 3.81(b).

A request for a patent to be corrected to state the name of the assignee must:

A. state that the assignment was submitted for recordation as set forth in 37 CFR 3.11 before issuance of the patent;
B. include a request for a certificate of correction under 37 CFR 1.323 along with the fee set forth in 37 CFR 1.20(a); and
C. include the processing fee set forth in 37 CFR 1.17(i).

If the request is granted, Certificates of Correction Branch will be notified that a Certificate of Correction may be issued.
See Manual of Patent Examining Procedure, Section 1481.01 (Rev. 3) (Oct. 2005).

Applicant has not included items B and or C above, accordingly, the request for Certificate of Correction to add or change the assignee data is dismissed.
Any request under 37 CFR 3.81(b) should be directed to the following address or facsimile number:

By mail: Mail Stop PETITIONS

Commissioner for Patents
Post Office Box 1450
Alexandria, VA 22313-1450

By hand: Customer Service Window
Mail Stop Petitions
Randolph Building
401 Dulany Street
Alexandria, VA 22314

By fax: 571-273-8300 ATTN: Office of Petitions

If a fee (currently $100) was previously submitted for consideration of a Request for Certificate of Correction, under CFR 1.323, to correct assignment data, no additional fee is required.

If, the petition under 37 CFR 1.182 (required fee currently $130), is filed and granted, the patentee would be entitled to a certificate of correction under 37 CFR 1.323 (required fee currently $100).

Ernest C. White, ***LIE***
For Mary F. Diggs (703) 308-9390 x 125
Decisions & Certificates
of Correction Branch
(703) **308-9390 x 122**

ARENT FOX LLP
1050 CONNECTICUT AVENUE, N.W.
SUITE 400
WASHINGTON DC 20036

ecw

UNITED STATES PATENT AND TRADEMARK OFFICE

Commissioner for Patents
United States Patent and Trademark Office
P.O. Box 1450
Alexandria, VA 22313-1450
www.uspto.gov

ARENT FOX LLP
1050 CONNECTICUT AVENUE, N.W.
SUITE 400
WASHINGTON DC 20036

MAILED

JUN 24 2009

OFFICE OF PETITIONS

In re Patent No. 7,354,542	:	
Application No. 10/415,974	:	
Filed: May 5, 2003	:	ON PETITION
Issued: April 8, 2008	:	
Attorney Docket No. 027564.00002	:	

This is a decision on the petition filed May 27, 2009, which is being treated as a request under 37 CFR 3.81(b)[1] to correct the name of the assignee on the front page of the above-identified patent by way of a Certificate of Correction.

The request is **GRANTED**.

This matter is being referred to the Certificates of Correction Branch for issuance of the requested Certificate of Correction.

Telephone inquiries concerning this decision may be directed to Joan Olszewski at (571) 272-7751. Inquiries regarding the issuance of a certificate of correction should be directed to the Certificate of Correction Branch at (571) 272-4200.

/Liana Walsh/
Liana Walsh
Petitions Examiner
Office of Petitions

[1] *See* MPEP 1309, subsection II; and Official Gazette of June 22, 2004.

RAM Fee History Query

Revenue Accounting and Management

Name/Number: 10354542 Total Records Found: 5

Start Date: Any Date End Date: Any Date

Accounting Date	Sequence Num.	Fee Type	Fee Code	Fee Amount	Mailroom Date	Payment Method
01/10/2008	00006782	4	1402	$510.00	01/09/2008	DA 070960
11/13/2007	00000440	4	1401	$510.00	11/09/2007	DA 070960
03/06/2006	00000032	1	1806	$180.00	02/27/2006	DA 070960
02/07/2003	00000054	1	8021	$40.00	01/30/2003	DA 070960
02/03/2003	00000052	1	1001	$750.00	01/30/2003	DA 070960

```
Adjustment date: 06/24/2009  LDIEP1
10/06/2008 INTEFSW  00001315 10415974
01 FC:1811                        -100.00 OP
02 FC:1808                        -130.00 OP

06/24/2009 LDIEP1   00000001 7354542

01 FC:1808                         130.00 OP
02 FC:1811                         100.00 OP
```

11 DEC 2003

UNITED STATES PATENT AND TRADEMARK OFFICE

#6

COMMISSIONER FOR PATENTS
UNITED STATES PATENT AND TRADEMARK OFFICE
P.O. BOX 1450
ALEXANDRIA, VA 22313-1450
www.uspto.gov

Anthony J. Orler
Hogan & Hartson, L.L.P.
500 South Grand Avenue, Suite 1900
Los Angeles, CA 90071

In re Application of	:	
NISHIDE, et al.	:	
U.S. Application No.: 10/415,997	:	DECISION ON PETITION
PCT No.: PCT/JP01/09773	:	
Int. Filing Date: 08 November 2001	:	UNDER 37 CFR 1.137(b)
Priority Date: 09 November 2000	:	
Attorney Docket No.: 83363.0008	:	
For: MEDICAL BALLOON CATHETER	:	

The petition to revive under 37 CFR 1.137(b) filed 02 October 2003 in the above-captioned application is hereby **GRANTED** as follows:

Applicant's statement that "the entire delay from the due date for the required response until the filing this has been unintentional" and the prompt filing of the petition satisfies the requirement of 37 CFR 1.137(b)(3).

A review of the application file reveals that applicant has now provided payment of the full, U.S. Basic National fee and the requirements of 37 CFR 1.137(b) have been satisfied. Therefore, the request to revive the application abandoned under 35 U.S.C. 371(d) is granted as to the National stage in the United States of America.

This application is being forwarded to the United States Designated/Elected Office (US/DO/EO) for continued processing including the issuance of a Notification of Missing Requirements (Form PCT/DO/EO/905) indicating that an executed oath or declaration of the inventors is required.

Derek A. Putonen
Attorney Advisor
Office of PCT Legal Administration
Tel: (703) 305-0130
Fax: (703) 308-6459

UNITED STATES PATENT AND TRADEMARK OFFICE

COMMISSIONER FOR PATENTS
UNITED STATES PATENT AND TRADEMARK OFFICE
P.O. BOX 1450
ALEXANDRIA, VA 22313-1450
www.uspto.gov

MAIL

AUG 0 2 2004

DIRECTOR OFFICE
TECHNOLOGY CENTER 2600

WENDEROTH, LIND & PONACK, L.L.P.
2033 K STREET N. W.
SUITE 800
WASHINGTON DC 20006-1021

In re Application of
Makoto Hagai
Application No. 10/416,002
Filed: May 6, 2003
For: **IMAGE CODING METHOD AND IMAGE DECODING METHOD**

DECISION ON PETITION TO MAKE SPECIAL

This is a decision on the petition filed June 4, 2004 under Manual of Patent Examination Procedure §708.02, VIII requesting accelerated examination.

The petition under Manual of Patent Examination Procedure §708.02, VIII, must:

(1) be filed prior to receiving any examination by the examiner,
(2) be accompanied by the required fee- $130,
(3) the claims should be directed to a single invention (if it is determined that the claims pertain to more than one invention, then applicant will have to make an election without traverse or forfeit accelerated examination status),
(4) state that a pre-examination search was made, and fully discuss the search method employed, such as classes and subclasses searched, publications, Chemical abstracts, patents, etc. A search made by a foreign patent office satisfies this requirement,
(5) be accompanied by a copy of each of the references most closely related to the subject matter encompassed by the claims if said references are not already of record,
(6) fully discuss the references, pointing out with the particularity required by 37 C.F.R. §1.111 (b) and (c), how the claimed subject matter is patentable over the references.

The petitioner meets all the above-listed requirements. Accordingly, the petition is **GRANTED**.

The application will retain its special status throughout its entire prosecution, including any appeal to the Board of Patent Appeals and Interferences, subject only to diligent prosecution by the applicant. The application file is being forwarded to the examiner for appropriate action in due course.

Dwayne D. Bost
Special Program Examiner
Technology Center 2600
Communications

SPE RESPONSE FOR CERTIFICATE OF CORRECTION

Paper No.: X

DATE : May 12, 2008

TO SPE OF : ART UNIT 1617

SUBJECT : Request for Certificate of Correction for Appl. No.: 10/416029 Patent No.: 7214808 B2

A response is requested with respect to a request for a certificate of correction.

With respect to the change(s) requested to correct Office and/or Applicant's errors, should the patent read as shown in the certificate of correction attached herewith or the COCIN document(s), in IFW images for the above-identified patented application? No new matter should be introduced, nor should the scope or meaning of the claims be changed.

If the response is for an IFW, within 7 days, please complete and forward the response, to the employee (named below) via scanning into application images, using document code **COCX**.

DO NOT SENT TO ATTORNEY

If the response is for a paper file wrapper, please complete the response and forward the response with the paper file wrapper, to the employee (named below), within 7 days, to:

Certificates of Correction Branch (CofC)
South Tower - 9A22
Palm Location 7580

You can fax the Directors/SPE response to 571-270-9990

LAMONTE NEWSOME
Certificates of Correction Branch
703-308-9390 ext. 112

Thank You For Your Assistance

The request for issuing the above-identified correction(s) is hereby:
Note your decision on the appropriate box.

- ☒ **Approved** — All changes apply.
- ☐ **Approved in Part** — Specify below which changes **do not** apply.
- ☐ **Denied** — State the reasons for denial below.

Comments: Entrance of correction is approved.

Frederick [signature] — SPE

1612 — Art Unit

PTOL-306 (REV. 7/03)

U.S. DEPARTMENT OF COMMERCE Patent and Trademark Office

11 MAY 2004

UNITED STATES PATENT AND TRADEMARK OFFICE

COMMISSIONER FOR PATENTS
UNITED STATES PATENT AND TRADEMARK OFFICE
P.O. BOX 1450
ALEXANDRIA, VA 22313-1450
www.uspto.gov

William H. Holt
Law Office of William H. Holt
Unit 2, First Floor
1423 Powhatan Street
Alexandria, VA 22314

In re Application of	:	
CHEETHAM, et al.	:	
PCT No.: PCT/AU01/01458	:	DECISION ON PETITION
Application No.: 10/416,037	:	
Int. Filing Date: 09 November 2001	:	UNDER 37 CFR 1.181
Priority Date: 09 November 2000	:	
Atty. Docket No.: CHEETHAM-01458	:	
For: A DENTAL CARTRIDGE	:	

This is a decision on applicant's "Request For Corrected Filing Receipt" filed on 23 December 2003 in the United States Patent and Trademark Office (USPTO). The request is being treated as a petition under 37 CFR 1.181. No petition fee is due.

BACKGROUND

On 09 November 2001, applicant filed international application PCT/AU01/01458 which claimed priority to an earlier application filed 09 November 2000. The thirty-month period for paying the basic national fee in the United States expired at midnight on 09 May 2003.

On 07 May 2003, applicant filed a transmittal letter for entry into the national stage in the United States which was accompanied by the requisite basic national fee as required by 35 U.S.C. 371(c)(1) and a First preliminary amendment.

On 20 August 2003, applicant was mailed a "Notification of Missing Requirements" (Form PCT/DO/EO/905) informing applicant that an executed oath or declaration of the inventors in compliance with 37 CFR 1.497(a)-(b) was required. Applicant was also informed of the need to pay the required surcharge for providing and oath or declaration of the inventors later than thirty months from the priority date. Applicant was afforded two months to file the required response.

On 02 September 2003, applicant filed a response including a copy of an executed combined declaration and power of attorney and stamped postcard receipt indicating that the declaration had been filed 09 May 2003.

On 14 October 2003, applicant was mailed a "Notification of Acceptance" indicating a

371 date of 02 September 2003.

On 23 December 2003, applicant filed the present petition to convert pursuant to 37 CFR 1.181 accompanied by a stamped USPTO acknowledgment postcard.

DISCUSSION

The best evidence of what was actually received by the Office is a postcard receipt containing a specific itemization of all the items being submitted. See MPEP 503. Here, applicant has provided a copy of the date-stamped postcard receipt. The postcard identifies the application by title, applicants and docket number. Among the items listed on the receipt is "Combined Declaration and Power of Attorney for Patent Application (USA)" The postcard is stamped "OIPE Patent and Trademark Office JC73 MAY 09 2003." The evidence is sufficient to establish that the combined declaration and power of attorney for this application was received in the USPTO on 09 May 2003. An examination of the application file reveals that all of the requirements of 35 U.S.C. 371 for entry into the national stage in the United States were satisfied on 09 May 2003. As such, it is proper to **GRANT** applicant's petition at this time.

CONCLUSION

Applicant's petition under 37 CFR 1.181 is **GRANTED**.

The application will be given an international filing date of 09 November 2001 under 35 U.S.C. 363 and a date of **09 May 2003** under 35 U.S.C. 371(c)(1), (c)(2) and (c)(4).

The "Notification of Acceptance of Application Under 35 U.S.C. 371 and 37 CFR 1.494 or 1.495" (Form PCT/DO/EO/903) mailed 14 October 2003 indicating a date of 02 September 2003 under 35 U.S.C. 371(c) is hereby **VACATED**.

This application is being returned to the United States Designated/Elected Office (US/DO/EO) for further processing in accordance with this decision, namely the issuance of a "Notification of Acceptance of Application Under 35 U.S.C. 371 and 37 CFR 1.494 or 1.495" (Form PCT/DO/EO/903) and a corrected filing receipt indicating the correct 371 date as detailed above.

Derek A. Putonen
Attorney Advisor
Office of PCT Legal Administration
Tel: (703) 305-0130
Fax: (703) 308-6459

30 MAR 2004

#6

UNITED STATES PATENT AND TRADEMARK OFFICE

COMMISSIONER FOR PATENTS
UNITED STATES PATENT AND TRADEMARK OFFICE
ALEXANDRIA, VA 22313-1450
www.uspto.gov

Kenyon & Kenyon
One Broadway
New York, NY 10004

In re Application of	:	
Sebastian et al.	:	
Application No. 10/416,046	:	
PCT No.: PCT/DE02/02298	:	
Int. Filing Date: 21 June 2002	:	DECISION
Priority Date: 05 September 2001	:	
Atty. Docket No.: 10191/3052	:	
For: Fuel Injector	:	

This is in response to the "Response To Missing Requirements Under 35 U.S.C. 371" filed on 13 January 2004.

BACKGROUND

This international application was filed on 21 June 2002, elected the United States, and claimed an earlier priority date of 05 September 2001. The International Bureau communicated a copy of the published international application to the USPTO on 03 April 2003. Accordingly, the 30 month time period for paying the basic national fee in the United States expired at midnight on 05 March 2004.

On 05 May 2003, applicant filed *inter alia* the basic national fee.

On 13 August 2003, a Notification of Missing Requirements (Form PCT/DO/EO/905) was mailed to applicants, requiring the submission of an executed oath or declaration of the inventors.

On 09 October 2003, applicants filed a declaration and a surcharge under 37 CFR 1.492(e).

On 20 October 2003, a Notification of Defective Response (Form PCT/DO/EO/916) indicating that "there is a change in the 3rd inventor's name on the declaration. The name Wolfgang-Manfred Ruehle is on the published international application. In addition, I do not have an IB Form 306 indicating any change."

DISCUSSION

Inspection of the declaration filed on 09 October 2003 reveals that it names a joint inventor, Wolfgang-Manfred Ruehle, whose name is spelled as Wolfgang Rühle in the published international application. Although "Ruehle" is an acceptable English transliteration of the German spelling "Rühle", the discrepancy between "Wolfgang" and "Wolfgang-Manfred" is clearly more than a mere typographic error or phonetic misspelling of

applicant's name, a proper petition under 37 CFR 1.182 is required to resolve this matter. Such a petition must be accompanied by the $130.00 petition fee and by verified statements by the inventor and any other individuals having first-hand knowledge of the error. These statements must set forth in detail the specific circumstances as to how and when the error was made and discovered, and must also state (if appropriate) that the mistake was an inadvertent error made without deceptive intent.

CONCLUSION

Counsel's request to accept the declaration is **REFUSED**, without prejudice.

Any further correspondence with respect to this matter should be addressed to the Assistant Commissioner for Patents, Mail Stop PCT, Alexandria, VA 22313-1450, with the contents of the letter marked to the attention of the PCT Legal Office.

Leonard Smith
PCT Legal Examiner
PCT Legal Office

George M. Dombroske
PCT Legal Examiner
PCT Legal Office
Tel: (703) 308-6721
Fax: (703) 308-6459

20 SEP 2005

United States Patent and Trademark Office

Commissioner for Patents
United States Patent and Trademark Office
P.O. Box 1450
Alexandria, VA 22313-1450
www.uspto.gov

Kenyon & Kenyon
One Broadway
New York, NY 10004

In re Application of	:	
Sebastian et al.	:	
Application No. 10/416,046	:	
PCT No.: PCT/DE02/02298	:	
Int. Filing Date: 21 June 2002	:	DECISION
Priority Date: 05 September 2001	:	
Atty. Docket No.: 10191/3052	:	
For: Fuel Injector	:	

This is in response to the petitions under 37 CFR 1.182 and 37 CFR 1.137(b) filed on 29 July 2004.

DISCUSSION

Petition Under 37 CFR 1.182

In a decision mailed on 30 March 2004, the declaration filed on 09 October 2003 was not accepted, without prejudice because

> Inspection of the declaration filed on 09 October 2003 reveals that it names a joint inventor, Wolfgang-Manfred Ruehle, whose name is spelled as Wolfgang Rühle in the published international application. Although "Ruehle" is an acceptable English transliteration of the German spelling "Rühle", the discrepancy between "Wolfgang" and "Wolfgang-Manfred" is clearly more than a mere typographic error or phonetic misspelling of applicant's name, a proper petition under 37 CFR 1.182 is required to resolve this matter. Such a petition must be accompanied by the $130.00 petition fee and by verified statements by the inventor and any other individuals having first-hand knowledge of the error. These statements must set forth in detail the specific circumstances as to how and when the error was made and discovered, and must also state (if appropriate) that the mistake was an inadvertent error made without deceptive intent.

In response, counsel has submitted the instant petition under 37 CFR 1.182, which is accompanied by a "Statement In Support Of Petition Under 37 C.F.R. § 1.182" signed by joint inventor Wolfgang-Manfred Ruehle and explaining that the usage of his name as it appears in the executed declaration is the name he uses "in my place of employment in order to avoid confusion with another employee also named Wolfgang Rühle." He also states that the discrepancy "occurred without any deceptive intent on my part," and confirms that "I am the same inventor named in the invention set forth in International Patent Application PCT/DE02/02298 and the U.S. application identified above." The petition fee was paid on 29 July 2004. In view of all of the evidence now of record, it would be appropriate to grant the requested relief under 37 CFR 1.182.

Petition Under 37 CFR 1.137(b)

This international application became abandoned with respect to the United States for failure to timely reply to the Decision mailed on 30 March 2004. A grantable petition to revive an abandoned application under 37 CFR 1.137(b) must be accompanied by (1) the required reply, unless previously filed; (2) the petition fee as set forth in § 1.17(m); (3) a statement that the entire delay in filing the required reply from the due date for the reply until the filing of a grantable petition pursuant to this paragraph was unintentional. The Commissioner may require additional information where there is a question whether the delay was unintentional; and (4) any terminal disclaimer (and fee as set forth in § 1.20 (d)) required pursuant to paragraph (c) of this section.

Regarding requirement (1), the required reply in the form of a grantable petition under 37 CFR 1.182 has been filed, as discussed above.

Regarding requirement (2), the petition fee was filed on 29 July 2004.

Regarding requirement (3), the petition includes a statement that "Applicants' failure to timely file an acceptable Declaration was entirely unintentional." This statement is being construed as a statement that "the entire delay in filing the required reply from the due date for the reply until the filing of a grantable petition pursuant to 37 CFR 1.137(b) was unintentional." Petitioner must notify the Patent and Trademark Office if such an interpretation of the statement in the petition is not correct. Thus, the statement in the petition is being accepted in satisfaction of 37 CFR 1.137(b)(3).

Regarding requirement (4), no terminal disclaimer is required because the international filing date of this application is later than 8 June 1995.

DECISION

The petition under 37 CFR 1.182 is **GRANTED**.

The petition under 37 CFR 1.137(b) is **GRANTED**.

This application is being forwarded to the National Stage Processing Branch for further processing. Its date under 35 U.S.C. 371(c)(1), (2) and (4) is **09 October 2003**.

Leonard Smith
PCT Legal Examiner
PCT Legal Office

George M. Dombroske
PCT Legal Examiner
PCT Legal Office
Tel: (571) 272-3283
Fax: (571) 273-0459

UNITED STATES PATENT AND TRADEMARK OFFICE

Commissioner for Patents
United States Patent and Trademark Office
P.O. Box 1450
Alexandria, VA 22313-1450
www.uspto.gov

26 JAN 2006

James M. Bogden
ZYMOGENETICS INC.
1201 Eastlake Avenue East
Seattle, WA 98102

In re Application of OHRSTROM, Jan U.S. Application No.: 10/416,055 PCT No.: PCT/US01/47144 Int. Filing Date: 08 November 2001 Priority Date: 10 November 2000 Docket No.: 00-104 For: METHOD FOR TREATING HEMOPHILIA B	**DECISION** **ON PETITION UNDER** **37 CFR 1.10(c)**

This decision is in response to the papers filed with the United States Designated/Elected Office (DO/EO/US) on 08 September 2003 which are treated as a petition under 37 CFR 1.10(c). No fee is required.

BACKGROUND

Applicant filed papers to enter the national stage of PCT/US01/47144 using Express Mail service.

On 21 August 2003, the DO/EO/US mailed a Notice of Acceptance of Application Under 35 U.S.C. 371 and 37 CFR 1.495 (Form PCT/DO/EO/903) and filing receipt. The date of completion of all 35 U.S.C. 371 requirements was listed as 07 May 2003 on the Form PCT/DO/EO/903. The filing receipt indicated a filing date of 07 May 2003.

On 08 September 2003, applicant filed the subject petition which was accompanied by, *inter alia*, a copy of the Customer Copy of Express Mail Label No. EV117090365US and a copy of an Express Mail log.

DISCUSSION

Applicant requests that the filing date of the above-captioned national stage application be amended to 06 May 2003. Any correspondence received by the Patent and Trademark Office delivered by "Express Mail" will be considered filed in the office on the date of deposit with the USPS. 37 CFR 1.10(a). Moreover, 37 CFR 1.10(c) states that:

Any person filing correspondence under this section that was received by

the Office and delivered by the "Express Mail Post Office to Addressee" service of the USPS, who can show that there is a discrepancy between the filing date accorded by the Office to the correspondence and the date of deposit as shown by the "date - in" on the "Express Mail" mailing label or other official USPS notation, may petition the Commissioner to accord the correspondence a filing date as of the "date - in" on the "Express Mail" mailing label or other official USPS notation, provided that:

(1) The petition is filed promptly after the person becomes aware that the Office has accorded, or will accord, a filing date other than the USPS deposit date;

(2) The number of the "Express Mail" mailing label was placed on the paper(s) or fee(s) that constitute the correspondence prior to the original mailing by "Express Mail;" and

(3) The petition includes a true copy of the "Express Mail" mailing label showing the "date - in," and of any other official notation by the USPS relied upon to show the date of deposit.

The Express Mail number was listed on the transmittal letter and the date of deposit was recorded as 06 May 2003. A copy of the Customer Copy of Express Mail Label No. EV117090365US was submitted with the petition which shows the "Date In" as "05/06/03." In addition, counsel's Express Mail log submitted as additional evidence shows that Express Mail EV117090365US was deposited on 06 May 2003. This evidence is sufficient to satisfy item (3).

Accordingly, applicants have met all the requirements of 37 CFR 1.10(c).

CONCLUSION

Applicants' petition under 37 CFR 1.10(c) is hereby **GRANTED**.

For the reasons noted above, the Form PCT/DO/EO/903 and filing receipt mailed 21 September 2003 are **VACATED**.

This application is being forwarded to the DO/EO/US for further processing including mailing a corrected Form DO/EO/903 indicating a date of completion of all 35 U.S.C. 371 requirements and 35 U.S.C. 371(c)(1), (c)(2) and (c)(4) requirements of **06 May 2003** and a corrected filing receipt indicating a filing date or 371(c) date of **06 May 2003**.

This application will then be returned to Tech Center 1600 for further processing.

James Thomson
Attorney Advisor
Office of PCT Legal Administration

Tel.: (571) 272-3302

UNITED STATES PATENT AND TRADEMARK OFFICE

COMMISSIONER FOR PATENTS
UNITED STATES PATENT AND TRADEMARK OFFICE
P.O. BOX 1450
ALEXANDRIA, VA 22313-1450
www.uspto.gov

WOLF GREENFIELD & SACKS, P.C.
600 ATLANTIC AVENUE
BOSTON MA 02210-2206

COPY MAILED

SEP 15 2009

OFFICE OF PETITIONS

In re Patent No. 7,498,034	: ON REQUEST FOR
Bicknell et al.	: RECONSIDERATION OF
Issue Date: March 3, 2009	: PATENT TERM ADJUSTMENT
Application No. 10/416,090	: and
Filed: October 15, 2003	: NOTICE OF INTENT TO ISSUE
Attorney Docket No. P0357.	: CERTIFICATE OF CORRECTION
70002US00	:

This is a decision on the "APPLICATION FOR PATENT TERM ADJUSTMENT UNDER 37 C.F.R. § 705(D)," filed on May 1, 2009, which is being treated as a petition pursuant to 37 CFR § 1.705(d), requesting that the patent term adjustment determination for the above-identified patent be changed from three hundred and ninety-nine (399) to one thousand and ninety-six (1096) days.

The request for reconsideration of patent term adjustment is **GRANTED** to the extent indicated herein.

For reasons other than those stated by patentees, the patent term adjustment indicated in the patent is to be corrected by issuance of a certificate of correction showing a revised Patent Term Adjustment of **five hundred and sixty-one (561) days**.

Patentees are given THIRTY (30) DAYS or ONE (1) MONTH, whichever is longer, from the mail date of this decision to respond to this decision. No extensions of time will be granted under § 1.136.

On March 3, 2009, the above-identified application matured into U.S. Patent No. 7,498,034 with a revised patent term adjustment of 399 days. This request for reconsideration of patent term adjustment was timely filed within two months of the issue date of the patent. See 1.705(d). The 399-day patent term adjustment includes a period of adjustment of 28 days pursuant

to 37 CFR 1.702(b) for the Office taking in excess of three years to issue the patent. A review of the record indicates that this 28-day period is incorrect.

The Office accorded 621 days of examination delay as the restriction requirement was mailed on August 28, 2006, which is 14 months and 621 days after the fulfilment date of October 15, 2003. Moreover, as of the filing of a request for continued examination (RCE)[1] on July 25, 2008, this application was pending three years and 811 days after the date on which the national stage commenced under 35 U.S.C. 371(b) or (f) in an international application, (Tuesday) May 6, 2003. As such, the Office should have included a period of adjustment of 190 (811 - 621) days pursuant to 37 CFR 1.702(b) for the Office taking in excess of three years to issue the patent.

Patentees argue that the period of adjustment for Office failure to issue the patent within three years is 811 days. Patentees contend that there are 114 days of overlap[2] between the days calculated under 37 C.F.R. § 1.702(a)(1)(621 days) and 37 C.F.R. § 1.702(b)(811 days), and therefore the correct days charged against the USPTO under § 1.702(a)(1) and § 1.702(b) is one thousand three hundred and forty-six (1346) days.[3] (Thus, given the undisputed applicant delay of 250 days, patentees contend that the patent should have issued with a revised patent term adjustment of 1096 (621 + 28 + 811 - 114 (overlap) - 250) days).

The revised patent term adjustment has been reconsidered, and it is determined that entry of a period of adjustment of 811 days pursuant to 37 CFR 1.702(b) for the Office taking in excess of three years to issue the patent is not warranted. However, as set forth above, the period of adjustment of 28 days accorded pursuant to 37 CFR 1.702(b) is incorrect.

The Office does not agree with patentees' interpretation of the overlap provision. It is the Office's position that the period for over 3 year pendency does not overlap only to the extent that the actual dates in the period beginning three years after the application filing date overlap with the actual dates in the

---

[1] The filing of a RCE cuts-off applicants' ability to accumulate any additional patent term adjustment against the three-year pendency provision, but does not otherwise affect patent term adjustment. 37 CFR § 1.703(b)(1).
2 Petition, page 2, paragraph 2(c).
3 Patentee double-counts the 28 days, entered pursuant to 37 CFR 1.702(b): separately, and as part o the 811 day period.

periods accorded for Office delay during the pendency of the application. The relevant overlap provision, 35 U.S.C. 154(b)(2)(A), limits the adjustment of patent term, as follows:

> to the extent that the periods of delay attributable to grounds specified in paragraph (1) overlap, the period of any adjustment granted under this subsection shall not exceed the actual number of days the issuance of the patent was delayed.

Likewise, 37 CFR 1.703(f) provides that:

> To the extent that periods of delay attributable to the grounds specified in §1.702 overlap, the period of adjustment granted under this section shall not exceed the actual number of days the issuance of the patent was delayed.

As explained in Explanation of 37 CFR 1.703(f) and of the United States Patent and Trademark Office Interpretation of 35 U.S.C. 154(b)(2)(A), 69 Fed. Reg. 34283 (June 21, 2004), the Office interprets 35 U.S.C. 154(b)(2)(A) as permitting either patent term adjustment under 35 U.S.C. 154(b)(1)(A)(i)-(iv), or patent term adjustment under 35 U.S.C. 154(b)(1)(B), but not as permitting patent term adjustment under both 35 U.S.C. 154(b)(1)(A)(i)-(iv) and 154(b)(1)(B). Accordingly, the Office implements the overlap provision as follows:

> If an application is entitled to an adjustment under 35 U.S.C. 154(b)(1)(B), the entire period during which the application was pending (except for periods excluded under 35 U.S.C. 154(b)(1)(B)(i)-(iii)), and not just the period beginning three years after the actual filing date of the application, is the period of delay under 35 U.S.C. 154(b)(1)(B) in determining whether periods of delay overlap under 35 U.S.C. 154(b)(2)(A). Thus, any days of delay for Office issuance of the patent more than 3 years after the filing date of the application, which overlap with the days of patent term adjustment accorded prior to the issuance of the patent will not result in any additional patent term adjustment. See 35 U.S.C. 154(b)(1)(B), 35 U.S.C. 154(b)(2)(A), and 37 CFR § 1.703(f). See *Changes to Implement Patent Term Adjustment Under Twenty Year Term; Final Rule*, 65 Fed. Reg. 56366 (Sept. 18, 2000). See also *Revision of Patent Term*

Extension and Patent Term Adjustment Provisions; Final Rule, 69 Fed. Reg. 21704 (April 22, 2004), 1282 Off. Gaz. Pat. Office 100 (May 18, 2004). See also *Explanation of 37 CFR 1.703(f) and of the United States Patent and Trademark Office Interpretation of 35 U.S.C. 154(b)(2)(A)*, 69 Fed. Reg. 34283 (June 21, 2004).

Moreover, as the period subsequent to the filing of an RCE is not included in the three-year time frame specified in 35 U.S.C. 154(b)(1)(B), in cases where an RCE has been filed, the relevant period under 35 U.S.C. 154(b)(1)(B) in determining whether periods of delay "overlap" under 35 U.S.C. 154(b)(2)(A) is the period from the application's filing date to the date of filing of a request for continued examination. Thus, any days of delay for Office issuance of the patent more than 3 years after the filing date of the application, which overlap with the days of patent term adjustment accorded prior to the filing of the request for continued examination (RCE) will not result in any additional patent term adjustment. See 35 U.S.C. 154(b)(1)(B), 35 U.S.C. 154(b)(2)(A), and 37 CFR § 1.703(f).

In this instance, the commencement date of this application was May 6, 2003, and an RCE was filed on July 25, 2008. Accordingly, the relevant period under 35 U.S.C. 154(b)(1)(B) in determining whether periods of delay "overlap" under 35 U.S.C. 154(b)(2)(A) is the entire period from the application's commencement date, May 6, 2003, to the date of filing of the request for continued examination (RCE), July 25, 2008. As of the filing of the RCE, this application was pending 3 years and 811 days and 621 days of adjustment had been accorded for examination delay. (No periods of adjustment for examination delay were accorded subsequent to the filing of the RCE). The period of delay of 811 days attributable to the delay in the issuance of the patent overlaps with the adjustments of 621 days attributable to the ground specified in § 1.702(a)(1). 811 days is determined to be the actual number of days issuance of the patent was delayed by the Office.

Therefore, at issuance, the Office should have entered 190 (811 - 621) days, not 28 days, of patent term adjustment for the Three Year Delay period for a total Office delay of 811. The 28 day period has been removed and the 190 day period has been entered.

As such, patentees are entitled to a patent term adjustment of 561 days (621 days examination delay + 190 days Three Year delay - 250 days for applicant delay).

Accordingly, the patent term adjustment indicated in the patent is to be corrected by issuance of a certificate of correction showing a revised Patent Term Adjustment of five hundred sixty-one (561) days.

The Office acknowledges receipt of the $200.00 fee set forth in 37 CFR 1.18(e). No additional fees are required.

The application file is being forwarded to the Certificates of Correction Branch for issuance of a certificate of correction in order to rectify this error. The Office will issue a certificate of correction indicating that the term of the above-identified patent is adjusted by five hundred sixty-one (561) days.

Telephone inquiries specific to this matter should be directed to Paul Shanoski, Senior Attorney, at (571) 272-3225.

Nancy Johnson
Senior Petitions Attorney
Office of Petitions

Enclosure: Copy of DRAFT Certificate of Correction

UNITED STATES PATENT AND TRADEMARK OFFICE

CERTIFICATE OF CORRECTION

PATENT : 7,498,034 B2

DATED : Mar. 3, 2009 **DRAFT**

INVENTOR(S) : Bicknell et al.

It is certified that error appears in the above-identified patent and that said Letters Patent is hereby corrected as shown below:

On the cover page,

[*] Notice: Subject to any disclaimer, the term of this patent is extended or adjusted under 35 USC 154(b) by 399 days

Delete the phrase "by 399" and insert – by 561 days--

UNITED STATES PATENT AND TRADEMARK OFFICE

Commissioner for Patents
United States Patent and Trademark Office
P.O. Box 1450
Alexandria, VA 22313-1450
www.uspto.gov

COPY MAILED

NOV 29 2007

OFFICE OF PETITIONS

AKERMAN SENTERFITT
PO BOX 3188
WEST PALM BEACH FL 33402-3188

In re Application of	:	
Koichiro Shinbo	:	
Application No. 10/416,119	:	ON PETITION
Filed: May 8, 2003	:	
Attorney Docket No. 3883.015	:	

This is a decision on the petition under 37 CFR 1.137(b), filed August 15, 2007, to revive the above-identified application.

The petition under 37 CFR 1.137(b) is **GRANTED**.

The above-identified application became abandoned for failure to timely file a response to the non-final Office action mailed May 24, 2005. This Office set a shortened statutory period for reply of three (3) months. No reply having been received, the application became abandoned on August 25, 2005. The Office mailed a Notice of Abandonment on December 7, 2005.

With the instant petition, applicant paid the petition fee, made the proper statement of unintentional delay, and submitted the required reply in the form of an Amendment.

The $750 petition fee has been charged to Deposit Account No. 50-0951, as authorized.

It is not apparent whether the person signing the statement of unintentional delay was in a position to have firsthand or direct knowledge of the facts and circumstances of the delay at issue. Nevertheless, such statement is being treated as having been made as the result of a reasonable inquiry into the facts and circumstances of such delay. See 37 CFR 10.18(b) and Changes to Patent Practice and Procedure; Final Rule Notice, 62 Fed. Reg. 53131, 53178 (October 10, 1997), 1203 Off. Gaz. Pat. Office 63, 103 (October 21, 1997). In the event that such an inquiry has not been made, petitioner must make such an inquiry. If such inquiry results in the discovery that it is not correct that the entire delay in filing the required reply from the due date for the reply until the filing of a grantable petition pursuant to 37 CFR 1.137(b) was unintentional, petitioner must notify the Office.

The matter is being forwarded to Group Art Unit 3625 for consideration of the Amendment filed August 15, 2007.

Telephone inquiries concerning this decision should be directed to the undersigned at (571)272-3207.

Cliff Congo
Petitions Attorney
Office of Petitions

UNITED STATES PATENT AND TRADEMARK OFFICE

Commissioner for Patents
United States Patent and Trademark Office
P.O. Box 1450
Alexandria, VA 22313-1450
www.uspto.gov

SHUMAKER & SIEFFERT, P.A.
1625 RADIO DRIVE
SUITE 300
WOODBURY MN 55125

MAILED

NOV 12 2009

OFFICE OF PETITIONS

In re Application of	:	
Paul E. Share et al	:	
Application No. 10/416,135	:	DECISION ON PETITION
Filed: May 8, 2003	:	
Attorney Docket No. 11939-010US1	:	

This is a decision on the petition under the unintentional provisions of 37 CFR 1.137(b), filed August 10, 2009, to revive the above-identified application.

The petition is **GRANTED**.

The petition satisfies the conditions for revival pursuant to the provisions of 37 CFR 1.137(b) in that (1) the reply in the form of an RCE and an amendment; (2) the petition fee; and (3) the required statement of unintentional delay have been received. Accordingly, the reply is accepted as having been unintentionally delayed.

Telephone inquiries concerning this decision should be directed to the undersigned at (571) 272-3208.

This application is being referred to Technology Center AU 1794 for appropriate action by the Examiner in the normal course of business on the reply received August 10, 2009.

/KOC/
Karen Creasy
Petitions Examiner
Office of Petitions

UNITED STATES PATENT AND TRADEMARK OFFICE

Commissioner for Patents
United States Patent and Trademark Office
P.O. Box 1450
Alexandria, VA 22313-1450
www.uspto.gov

A J Mack
Rosewood
PO Box 55
Williamstown 5351 AU AUSTRALIA

COPY MAILED

SEP 2 3 2005

OFFICE OF PETITIONS

In re Application of
Allan John Mack
Application No. 10/416,143
Filed: May 5, 2003
Title of Invention: Automated Music Harmonizer

ON PETITION

This is a decision on the petition filed June 22, 2005, under 37 CFR 1.137 (a) and in the alternative under 37 CFR 1.137 (b) to revive the above-identified application.

The petition to revive under 37 CFR § 1.137(a) is **DISMISSED**.
The petition to revive under 37 CFR§ 1.137 (b) is **GRANTED.**

This above-identified application became abandoned for failure to timely file a reply to a non-final Office Action. The non-final Office Action was mailed on September 17, 2004 and set a three (3) month shortened statutory period for reply. No extensions of time were obtained under the provisions of 37 CFR §1.136(a). Accordingly, this application became abandoned on December 18, 2004. A Notice of Abandonment was mailed on May 27, 2005.

Petitioner contends that a response to the Office action was timely submitted on November 24, 2004.

PETITION TO REVIVE UNDER 37 CFR § 1.137(a)
A grantable petition under 37 CFR § 1.137(a) must be accompanied by:
(1) the required reply,[1]
(2) the petition fee,
(3) a showing <u>to the satisfaction of the Director</u> that the <u>entire</u> delay in filing the required reply from the due date for the reply until the filing of a grantable petition pursuant to this paragraph was <u>unavoidable</u>, and

[1] In a nonprovisional application abandoned for failure to prosecute, the required reply may be met by the filing of a continuing application. In an application or patent, abandoned or lapsed for failure to pay the issue fee or any portion thereof, the required reply must be the payment of the issue fee or any outstanding balance thereof.

(4) a terminal disclaimer and fee if the application was filed on or before June 8, 1995 or if the application is a design application.

The instant petition lacks items (2) and (3).

As to item (2), the $250.00 petition fee is a prerequisite to treatment of the petition. The Office is only in receipt of the unintentional petition fee.

Assuming arguendo the petition fee had been submitted, petitioner would not have been successful under the unavoidable standard because petitioner has failed to provide sufficient evidence to warrant a finding of unavoidable abandonment . Petitioner contends a reply to the non final Office action was posted at the Williamstown (South Australia) Office of Australia Post using the express option. A review of the record confirms that the response to the non final Office action was not received. While it is acknowledged petitioner has attempted to gather evidence to establish the mail was placed in Australian Express mail, such evidence would not benefit petitioner. 37 CFR 1.10(c) through 1.10(e) set forth procedures for petitioning the Director of the USPTO to accord a filing date to correspondence as of the date of deposit of the correspondence as "Express Mail." The procedure in 37 CFR 1.10 is limited to correspondence deposited in the "Express Mail Post Office to Addressee" service of the United State Postal Service. There are no similar provisions and no similar benefit can be obtained for correspondence deposited in International Express Mail. MPEP 513.

Accordingly, the petition under 37 CFR 1.137 (a) must be dismissed.

Alternative Venue

In the alternative, petitioner has requested the above petition be treated under 37 CFR 1.137(b).

The statement of unintentional delay presented in the petition does not comply with the current rule. Pursuant to 37 CFR 1.137(b)(3) a statement that "the entire delay in filing the required reply from the due date for the reply until the filing of a grantable petition pursuant to 37 CFR 1.137(b) was unintentional" is required. However, the statement presented will be accepted and construed as the statement required by 37 CFR 1.137(b)(3). Petitioner must notify the Office if this is **not** a correct interpretation of the statement contained in the instant petition.

The requirements for the filing of a grantable petition under 37 CFR §1.137(b) have been met. This Petition is hereby **Granted**.

This application is being forwarded to Technology Center 2800 for further processing of the amendments submitted on June 22, 2005 and July 20, 2005.

Telephone inquiries should be directed to the undersigned at (571) 272-3215.

Charlema R. Grant

Charlema R. Grant
Petitions Attorney
Office of Petitions

04 NOV 2003

#5

UNITED STATES PATENT AND TRADEMARK OFFICE

COMMISSIONER FOR PATENTS
UNITED STATES PATENT AND TRADEMARK OFFICE
P.O. BOX 1450
ALEXANDRIA, VA 22313-1450
www.uspto.gov

Norman F. Oblan
Oblon, Spivak, McClelland, Maier & Neustadt, P.C.
Fourth Floor
1755 Jefferson Davis Highway
Arlington, VA. 22202

In re Application of	:	
BIGGI, et al.	:	
Application No.: 10/416,167	:	
PUT No.: PCT/EP01/13052	:	DECISION ON PETITION
Int. Filing Date: 07 November 2001	:	
Priority Date: 16 November 2000	:	UNDER 37 CFR 1.42
Attorney Docket No.: 237379US0XPCT	:	
For: ELASTOMERIC COMPOSITION	:	
COMPRISING A FUNCTIONALIZED	:	
ELASTOMER	:	

This decision is in response to applicant's "Response to Notice of Missing Requirements Under 35 U.S.C. 371" filed 20 October 2003. The response is being treated as a request for status pursuant to 37 CFR 1.42. No petition fee is required.

BACKGROUND

On 07 November 2001, applicants filed the international application, which claimed a priority date of 16 November 2002. A copy of the international application was communicated to the United States Patent and Trademark Office from the International Bureau on 23 May 2002. Pursuant to 37 CFR 1.495, the deadline for payment of the basic national fee in the United States was to expire 30 months from the priority date, 16 May 2003.

On 16 May 2003, applicants filed a transmittal letter for entry into the national stage in the United States accompanied by the requisite basic national fee, an Information Disclosure Statement and an Application Data Sheet.

On 20 August 2003, applicant was mailed a "NOTIFICATION OF MISSING REQUIREMENTS UNDER 35 U.S.C. 371" (Form PCT/DO/EO/905) informing applicant of the need to provide an oath or declaration of the inventors, in compliance with 37 CFR 1.497(a) and (b), identifying the application by the International application number and international filing date. Applicant was afforded two months to file the proper reply and informed that this period could be extended pursuant to 37 CFR 1.136(a).

On 20 October 2003, applicant filed the present response which included a combined

declaration and power of attorney executed by joint inventors Cristina Arcoleo and Luca Vitalini Sacconi. In addition, the declaration and power of attorney was executed by Orsola Casaburo and Lisa Biggi as heirs to the estate of deceased inventor Aroldo Biggi.

DISCUSSION

Pursuant to 37 CFR 1.42, first sentence:

"In case of the death of the inventor, the legal representative (executor, administrator, etc.) of the deceased inventor may make the necessary oath or declaration, and apply for and obtain a patent."

The declaration filed 20 October 2003 is executed by Orsola Casaburo and Lisa Biggi as heirs to the estate of deceased inventor Aroldo Biggi. However, the "Substitutive Declaration of Affidavit" executed by Orsola Casaburo identifies a third heir, Silvia Biggi who has not executed the declaration. As such, the declaration can not be accepted at this time. In addition, the declaration is not in compliance with 37 CFR 1.497 (a)-(b) in that it is unclear whether the declaration (specifically the signature box executed by Orsola Casaburo) is setting forth the residence, post office address and country of citizenship of Aroldo Biggi or the heir. Under 37 CFR 1.497(b) the information must be provided for both the deceased inventor, Aroldo Biggi and the surviving heir, Orsola Casaburo.

In additon to filing a compliant oath or declaration of the inventors, in order to proceed under 37 CFR 1.42, applicant is also required to file a statement that no legal representative of the deceased's estate has been appointed or is statutorily required to be appointed.

CONCLUSION

Applicants' petition under 37 CFR 1.42 is **DISMISSED, without prejudice**.

Applicants are hereby afforded **TWO (2) MONTHS** from the mail date of this decision to file an oath or declaration in compliance with 37 CFR 1.497 (a)-(b). Any reconsideration request should include a cover letter entitled, "Renewed Petition Under 37 CFR 1.42." No additional petition fee is required. Extensions of time may be obtained under 37 CFR 1.136(a).

Any further correspondence with respect to this matter should be directed to Mail Stop PCT, Commissioner for Patents, Office of PCT Legal Administration, P.O. Box 1450, Alexandria, Virginia 22313-1450, with the contents of the letter marked to the attention of the Office of PCT Legal Administration.

Derek A. Putonen
Attorney Advisor
Office of PCT Legal Administration
Tel: 703-305-0130
Fax: 703-308-6459

02 MAR 2004

#7

UNITED STATES PATENT AND TRADEMARK OFFICE

COMMISSIONER FOR PATENTS
UNITED STATES PATENT AND TRADEMARK OFFICE
P.O. BOX 1450
ALEXANDRIA, VA 22313-1450
www.uspto.gov

Norman F. Oblan
Oblon, Spivak, McClelland, Maier & Neustadt, P.C.
Fourth Floor
1755 Jefferson Davis Highway
Arlington, VA. 22202

In re Application of BIGGI, et al. Application No.: 10/416,167 PCT No.: PCT/EP01/13052 Int. Filing Date: 07 November 2001 Priority Date: 16 November 2000 Attorney Docket No.: 237379US0XPCT For: ELASTOMERIC COMPOSITION COMPRISING A FUNCTIONALIZED ELASTOMER	DECISION ON RENEWED PETITION UNDER 37 CFR 1.42

This decision is in response to applicant's "RENEWED PETITION UNDER 37 C.F.R. 1.42" filed 14 January 2004.

BACKGROUND

On 04 November 2003, applicant was mailed a decision dismissing applicant's request for status under 37 CFR 1.42. Applicant was afforded two months to file any request for reconsideration and advised that this period could be extended pursuant to 37 CFR 1.136(a).

On 14 January 2004, applicant filed the present response accompanied by a supplemental declaration and power of attorney and petition for a one-month extension of time. With the filing of the petition for a one-month extension of time and payment of the appropriate extension fee, applicant's response is considered timely filed.

DISCUSSION

As detailed in the decision mailed 04 November 2003, 37 CFR 1.42 states:

"In case of the death of the inventor, the legal representative (executor, administrator, etc.) of the deceased inventor may make the necessary oath or declaration, and apply for and obtain a patent."

In the decision mailed 04 November 2003, applicant was advised that in order to proceed under 37 CFR 1.42, applicant was also required to file a statement that no legal representative of

the deceased's estate has been appointed or is statutorily required to be appointed. Applicant has presently supplied such a statement from Mrs. Orsola Casaburo, one of the heirs to the estate of the deceased joint inventor, Aroldo Biggi.

As to the declaration and power of attorney filed 20 October 2003, the document was previously held not to comply with 37 CFR 1.497 (a)-(b) in that a) it was unclear whether the declaration (specifically the signature box executed by Orsola Casaburo) was setting forth the residence, post office address and country of citizenship of Aroldo Biggi or the heir and b) it appeared that there was an additional heir who had not executed the declaration. Applicant's response of 14 January 2004 does not completely satisfy these concerns.

Applicant has provided a signed statement from Mrs. Casaburo stating that the she and the deceased inventor shared the same citizenship. However, under 37 CFR 1.497, the information must be provided for both the deceased inventor, Aroldo Biggi and the surviving heirs on the filed declaration itself. As to the additional heir, applicant has provided a supplemental declaration executed Mrs. Orsola Casaburo on behalf of her daughter Silvia Biggi. However, the document does not state the relationship of Silvia Biggi to the deceased inventor as required under 37 CFR 1.497(b)(2). In light of the above, it is not possible to grant applicant's renewed petition at this time.

CONCLUSION

Applicant's renewed petition under 37 CFR 1.42 is **DISMISSED, without prejudice**.

Applicant is hereby afforded **TWO (2) MONTHS** from the mail date of this decision to file an oath or declaration in compliance with 37 CFR 1.497 (a)-(b). Any reconsideration request should include a cover letter entitled, "Renewed Petition Under 37 CFR 1.42." No additional petition fee is required. Extensions of time may be obtained under 37 CFR 1.136(a).

Any further correspondence with respect to this matter should be directed to Mail Stop PCT, Commissioner for Patents, Office of PCT Legal Administration, P.O. Box 1450, Alexandria, Virginia 22313-1450, with the contents of the letter marked to the attention of the Office of PCT Legal Administration.

Derek A. Putonen
Attorney Advisor
Office of PCT Legal Administration
Tel: 703-305-0130
Fax: 703-308-6459

15 MAR 2004

#9

UNITED STATES PATENT AND TRADEMARK OFFICE

COMMISSIONER FOR PATENTS
UNITED STATES PATENT AND TRADEMARK OFFICE
P.O. BOX 1450
ALEXANDRIA, VA 22313-1450
www.uspto.gov

Norman F. Oblan
Oblon, Spivak, McClelland, Maier & Neustadt, P.C.
Fourth Floor
1755 Jefferson Davis Highway
Arlington, VA. 22202

In re Application of BIGGI, et al. Application No.: 10/416,167 PCT No.: PCT/EP01/13052 Int. Filing Date: 07 November 2001 Priority Date: 16 November 2000 Attorney Docket No.: 237379US0XPCT For: ELASTOMERIC COMPOSITION COMPRISING A FUNCTIONALIZED ELASTOMER	DECISION ON RENEWED PETITION UNDER 37 CFR 1.42

This decision is in response to applicant's "SECOND RENEWED PETITION UNDER 37 C.F.R. 1.42" filed 11 March 2004.

BACKGROUND

On 02 March 2004, applicant was mailed a decision dismissing applicant's renewed request for status under 37 CFR 1.42. Applicant was afforded two months to file any request for reconsideration and advised that this period could be extended pursuant to 37 CFR 1.136(a).

On 11 March 2004, applicant filed the present response.

DISCUSSION

As detailed in the decision mailed 04 November 2003, 37 CFR 1.42 states:

"In case of the death of the inventor, the legal representative (executor, administrator, etc.) of the deceased inventor may make the necessary oath or declaration, and apply for and obtain a patent."

Discussions with counsel and a review of the signed statement from Mrs. Casaburo shows that declaration filed 14 January 2004 details that Mrs. Casaburo and the deceased inventor shared the same citizenship. In addition, the declaration identifies daughter Silvia Biggi as an heir to the deceased inventor. As such, applicant has satisfied all of the concerns raised in the decisions mailed 04 November 2003 and 02 March 2004 and it is proper to grant applicant's second

renewed petition under 37 CFR 1.42 at this time.

CONCLUSION

Applicant's second renewed request for status under 37 CFR 1.42 is **GRANTED**.

This application will be given an international application filing date of 07 November 2001 and a date of **14 January 2004** under 35 U.S.C. 371.

This application is being returned to the DO/EO/US for processing in accordance with this decision.

Derek A. Putonen
Attorney Advisor
Office of PCT Legal Administration
Tel: 703-305-0130
Fax: 703-308-6459

UNITED STATES PATENT AND TRADEMARK OFFICE

Commissioner for Patents
United States Patent and Trademark Office
P.O. Box 1450
Alexandria, VA 22313-1450
www.uspto.gov

OBLON, SPIVAK, MCCLELLAND MAIER & NEUSTADT, P.C.
1940 DUKE STREET
ALEXANDRIA VA 22314

COPY MAILED

MAR 19 2008

OFFICE OF PETITIONS

In re Application of	:	
Marie-Louise Johansson et al	:	
Application No. 10/416,184	:	DECISION GRANTING PETITION
Filed: May 9, 2003	:	UNDER 37 CFR 1.313(c)(2)
Attorney Docket No. 237269US0PCT	:	

This is a decision on the petition under 37 CFR 1.313(c)(2), filed March 17, 20008, to withdraw the above-identified application from issue after payment of the issue fee.

The petition is **GRANTED**.

The above-identified application is withdrawn from issue for consideration of a submission under 37 CFR 1.114 (request for continued examination). *See* 37 CFR 1.313(c)(2).

Petitioner is advised that the issue fee paid on January 29, 2008 cannot be refunded. If, however, this application is again allowed, petitioner may request that it be applied towards the issue fee required by the new Notice of Allowance.[1]

Telephone inquiries should be directed to the undersigned at (571) 272-3208.

This application is being referred to Technology Center AU 1657 for processing of the request for continued examination under 37 CFR 1.114 and for consideration of the concurrently filed IDS.

Karen Creasy
Petitions Examiner
Office of Petitions

---

[1] *The request to apply the issue fee to the new Notice may be satisfied by completing and returning the new Part B – Fee(s) Transmittal Form (along with any balance due at the time of submission). Petitioner is advised that the Issue Fee Transmittal Form must be completed and timely submitted to avoid abandonment of the application.*

UNITED STATES PATENT AND TRADEMARK OFFICE

Commissioner for Patents
United States Patent and Trademark Office
P.O. Box 1450
Alexandria, VA 22313-1450
www.uspto.gov

KNOBBE MARTENS OLSON & BEAR LLP
2040 MAIN STREET
FOURTEENTH FLOOR
IRVINE CA 92614

COPY MAILED
OCT 29 2007
OFFICE OF PETITIONS

In re Application of	:	
Brian Timothy Boland	:	
Application No. 10/416,194	:	ON PETITION
Filed: May 7, 2003	:	
Attorney Docket No. Grant-005	:	

This is a decision on the petition under 37 CFR 1.137(b), filed February 15, 2007, to revive the above-identified application.

The petition is **GRANTED**.

The application became abandoned for failure to reply in a timely manner to the non-final Office action mailed August 27, 2004, which set a shortened statutory period for reply of three (3) months. No extensions of time under the provisions of 37 CFR 1.136(a) was obtained. Accordingly, the application became abandoned on November 29, 2004. The Notice of Abandonment was mailed April 22, 2005.

The petition satisfies the requirements of 37 CFR 1.137(b) in that petitioner has supplied (1) the reply in the form of an amendment; (2) the petition fee of $750; and (3) an adequate statement of unintentional delay.

Telephone inquiries concerning this decision should be directed to Terri Williams at (571) 272-2991.

The application file is being referred to Technology Center AU 1772 for appropriate action on the concurrently filed amendment.

Liana Walsh
Petitions Examiner
Office of Petitions

UNITED STATES PATENT AND TRADEMARK OFFICE

UNITED STATES DEPARTMENT OF COMMERCE
United States Patent and Trademark Office
Address: COMMISSIONER FOR PATENTS
P.O. Box 1450
Alexandria, Virginia 22313-1450
www.uspto.gov

Fulbright & Jaworski
666 Fifth Avenue
New York, NY 10103

Mail Date: 04/21/2010

Applicant	: Pierre-Henri Leroy	: DECISION ON REQUEST FOR
Patent Number	: 7577603	: RECALCULATION of PATENT
Issue Date	: 08/18/2009	: TERM ADJUSTMENT IN VIEW
Appliction No	: 10/416,195	: OF WYETH AND NOTICE OF INTENT TO
Filed	: 05/06/2003	: ISSUE CERTIFICATE OF CORRECTION
		:

The Request for Recalculation is **GRANTED** to the extent indicated.

The patent term adjustment has been determined to be **1590** days. The USPTO will *sua sponte* issue a certificate of correction reflecting the amount of PTA days determined by the recalculation.

Prior to the issuance of the certificate of correction, the USPTO will afford patentee an opportunity to be heard and request reconsideration. Accordingly, patentee has **one month or thirty (30) days**, whichever is longer, to file a request for reconsideration of this patent term adjustment calculation. See 35 U.S.C. 154(b)(3)(B)(ii) and 37 CFR 1.322(a)(4). No extensions of time will be granted under 37 CFR 1.136.

Patentee should use document code PET.OP if electronically filing a request for reconsideration of this patent term adjustment calculation. The patentee must also include the information required by 37 CFR 1.705(b)(2) and the fee required by 37 CFR 1.18(e). If patentee does not file a timely request for reconsideration of this patent term adjustment calculation including the information required by 37 CFR 1.705(b)(2) and the fee required by 37 CFR 1.18(e), the USPTO will issue a certificate of correction reflecting the PTA determination noted above.

Patentee should be aware that in order to preserve the right to review in the United States District Court for the District of Columbia of the USPTO patent term adjustment determination, patentee must ensure that he or she also take the steps required under 35 U.S.C. 154(b)(4)(A) in a timely manner. Nothing in the request for recalculation should be construed as providing an alternative time frame for commencing a civil action under 35 U.S.C. 154(b)(4)(A).

Any questions concerning this decision should be directed to the Office of Patent Legal Administration at 571-272-7702.

UNITED STATES PATENT AND TRADEMARK OFFICE

Commissioner for Patents
United States Patent and Trademark Office
P.O. Box 1450
Alexandria, VA 22313-1450
www.uspto.gov

VENABLE, BAETJER, HOWARD AND CIVILETTI, LLP
P.O. BOX 34385
WASHINGTON, DC 20043-9998

COPY MAILED

SEP 17 2004

OFFICE OF PETITIONS

ON PETITION

In re Application of :
Holger Schuppan :
Application No. 10/416,198 :
Filed: May 8, 2003 :
Attorney Docket No. 41744-188840 :

This is a notice regarding your request for acceptance of a fee deficiency submission under 37 CFR 1.28. On September 1, 1998, the Court of Appeals for the Federal Circuit held that 37 CFR 1.28(c) is the sole provision governing the time for correction of the erroneous payment of the issue fee as a small entity. **See DH Technology v. Synergystex International, Inc. 154 F.3d 1333, 47 USPQ2d 1865 (Fed. Cir. Sept. 1, 1998).**

The Office no longer investigates or rejects original or reissue applications under 37 CFR 1.56. **1098 Off. Gaz. Pat. Office 502 (January 3, 1989)**. Therefore, nothing in this Notice is intended to imply that an investigation was done.

Your fee deficiency submission under 37 CFR 1.28 is hereby **ACCEPTED**.

Telephone inquiries concerning this decision should be directed to the undersigned at (703) 306-5594.

The application matter is being referred to the Publication Division.

Retta Williams

Retta Williams
Petitions Examiner
Office of Petitions
Office of the Deputy Commissioner
for Patent Examination Policy

#4

UNITED STATES PATENT AND TRADEMARK OFFICE

COMMISSIONER FOR PATENTS
UNITED STATES PATENT AND TRADEMARK OFFICE
P.O. BOX 1450
ALEXANDRIA, VA 22313-1450
www.uspto.gov

1 9 AUG 2003

Jay L. Chaskin
International Patent Operation
General Electric Company
3135 Easton Turnpike (W3C)
Fairfield, CT 06828

In re Application of FULOP et al	:	
U.S. Application No.: 10/416,238	:	
PCT Application No.: PCT/US00/12978	:	DECISION
Int. Filing Date: 11 May 2000	:	
Priority Date Claimed: (none)	:	
Attorney Docket No.: L 11441	:	
For: STARTING AID FOR FLUORESCENT LAMPS	:	

This is in response to applicant's "Petition for Revival of an International Application for Patent Designating the U.S. Abandoned Unintentionally Under 37 CFR 1.137(b)" filed 07 May 2003.

BACKGROUND

On 11 May 2000, applicant filed international application PCT/US00/12978.

International application PCT/US00/12978 became abandoned as to the United States for failure to timely pay the basic national fee.

On 07 May 2003, applicant filed the present petition under 37 CFR 1.137(b).

DISCUSSION

Under 37 CFR 1.137(b), a petition requesting that an application be revived on the grounds of unintentional abandonment must be accompanied by: (1) the required reply unless previously filed, (2) the petition fee as set forth in 37 CFR 1.17(m), (3) a statement that the entire delay in filing the required reply from the due date for the reply until the filing of a grantable petition was unintentional, and (4) a terminal disclaimer if the application was filed before 08 June 1995.

With regard to item (1), applicant has provided the required reply under 35 U.S.C. 371.

With regard to item (2), applicant has provided the required petition fee.

With regard to item (3), applicant has provided the required statement.

With regard to item (4), because the international application was filed after 08 June 1995, no terminal disclaimer is required.

CONCLUSION

For the reasons above, the petition under 37 CFR 1.137(b) is GRANTED.

The application has an International Filing Date under 35 U.S.C. 363 of 11 May 2000, and a date under 35 U.S.C. 371(c) of 07 May 2003.

This application is being forwarded to the United States Designated/Elected Office (DO/EO/US) for further processing in accordance with this decision.

Bryan Tung
PCT Legal Examiner
PCT Legal Office

Telephone: 703-308-6614
Facsimile: 703-308-6459

03 AUG 2004

UNITED STATES PATENT AND TRADEMARK OFFICE

COMMISSIONER FOR PATENTS
UNITED STATES PATENT AND TRADEMARK OFFICE
P.O. BOX 1450
ALEXANDRIA, VA 22313-1450
www.uspto.gov

Karen L. Elbing, Ph.D
Clark & Elbing
101 Federal Street
Boston, MA 02110

In re Application of	:	
WOLFF, et al.	:	
U.S. Application No.: 10/416,257	:	DECISION ON PETITION
PCT No.: PCT/US01/47419	:	
Int. Filing Date: 08 November 2001	:	FOR CORRECTION OF
Priority Date: 08 November 2000	:	
Attorney Docket No.: 00786/392002	:	FILING RECEIPT
For: METHODS FOR INHIBITING PAIN	:	

This decision is in response to applicant's "Petition to Correct Filing Receipt" filed 05 February 2004 requesting that the United States Patent and Trademark Office (USPTO) correct the filing receipt for the above captioned application as to the priority document.

On 09 January 2004, applicant was mailed a "Notification of Acceptance" (Form PCT/DO/EO/903) indicating that this application was a National stage application of PCT/US01/47410.

A careful review of USPTO records confirms that the priority document for this National stage application is in fact PCT/US01/47419 as indicated on applicant's filed transmittal letter, specification and executed combined declaration and power of attorney. As such, applicant's request is **GRANTED**.

The application is being forwarded to the United States Designated/Elected Office for preparation and mailing of a CORRECTED FILING RECEIPT and "Notification of Acceptance" (Form PCT/DO/EO/903) in accordance with this decision; specifically showing "This Application is a 371 of PCT/US01/47419 11/08/2001 which is a CIP of 09/708,375 11/08/2000 ABN.

Derek A. Putonen
Attorney Advisor
Office of PCT Legal Administration
Tel: (703) 305-0130
Fax: (703) 308-6459

UNITED STATES PATENT AND TRADEMARK OFFICE

Commissioner for Patents
United States Patent and Trademark Office
P.O. Box 1450
Alexandria, VA 22313-1450
www.uspto.gov

BIRCH STEWART KOLASCH & BIRCH
8110 GATEHOUSE ROAD
SUITE 100 EAST
P.O. BOX 747
FALLS CHURCH, VA 22040-0747

COPY MAILED

MAR 14 2006

OFFICE OF PETITIONS

In re Patent No. 6,931,935	:	
Issue Date: August 23, 2005	:	
Application No. 10/416,267	:	ON PETITION
Filed: May 9, 2003	:	
Attorney Docket No. 0365-0563P	:	

This is a decision on the petition under 37 CFR 1.183, filed December 15, 2005, which is being treated under 37 CFR 3.81(b), to correct the second assignee data on the front page of the above-identified patent by way of a Certificate of Correction.

The petition is **GRANTED**.

The patent file is being forwarded to the Certificates of Correction Branch for issuance of the requested Certificate of Correction.

Telephone inquiries concerning this decision may be directed to the undersigned at (571) 272-3220. Inquiries regarding the issuance of a certificate of correction should be directed to the Certificate of Correction Branch at (703) 305-8309.

Wan Laymon

Wan Laymon
Petitions Examiner
Office of Petitions

UNITED STATES PATENT AND TRADEMARK OFFICE

Commissioner for Patents
United States Patent and Trademark Office
P.O. Box 1450
Alexandria, VA 22313-1450
www.uspto.gov

MORGAN LEWIS & BOCKIUS, LLP
1111 PENNSYLVANIA AVENUE NW
WASHINGTON, DC 20004

COPY MAILED
JUL 03 2008
OFFICE OF PETITIONS

In re Patent No. 7,179,471 :
Issue Date: February 20, 2007 :
Application No. 10/416,290 : DECISION ON PETITION
Filed: October 27, 2003 :
Patentee(s): Natalia Savelyeva, et. al. :

This is a decision on the request under 37 CFR 3.81 filed on April 17, 2008, to correct the name of the assignee on the front page of the above patent by way of a certificate of correction.

The petition is **dismissed**.

37 CFR 3.81(b) permits the patent to issue in the name of an assignee if the assignment was submitted after payment of the issue fee, but ***prior to issuance of a patent***.

Petitioner requests issuance of a Certificate of Correction in the name of "Cancer Research Technology Limited". However, U.S. Patent and Trademark Office assignment records fail to show that an assignment listing the name of the assignee as "Cancer Research Technology Limited," was submitted for recordation **prior** to issuance of the above patent. Therefore, a Certificate of Correction would not be in order.

It is not apparent whether the person signing the instant petition was ever given a power of attorney or authorization of agent to prosecute the above-identified application. However, in accordance with 37 CFR 1.34(a), the signature of Robert Smyth appearing on the petition shall constitute a representation to the United States Patent and Trademark Office that he is authorized to represent the particular party in whose behalf he acts.

This patent file is being referred to the Certificates of Correction Branch for review of the additional correction requested in the Certificate of Correction filed on April 17, 2008.

Inquiries concerning this decision should be directed to the undersigned at (571) 272-3226.

Andrea Smith
Petitions Examiner
Office of Petitions

UNITED STATES DEPARTMENT OF COMMERCE
Patent and Trademark Office
ASSISTANT SECRETARY OF COMMERCE AND
COMMISSIONER OF PATENTS AND TRADEMARKS
Washington, DC 20231

11/18/01

Patent No. :7179471
Inventor(s) :Natalia Savelyeva et al.
Issued : 10/27/2003
Title : Materials And Methods Relating To Fusion Proteins An Immune Response
Atty.doc./File No.

Request for Certificates of Correction

Consideration has been given to your request for the issuance of a Certificate of Correction, for the above – identified patent under the provisions of CFR 1.322.

Inspection of the application for the patent reveals that item [73] is printed in accordance with the record and also dismissed by the petition Office. Therefore being no fault on the Patent and Trademark Office, It has no authority to issue a certificate of correction under the provision of 1.322.

In view of the forgoing, your request in this matter, is hereby denied.

Future written correspondence concerning this matter should be filed and directed to Decisions & Certificates of Correction Branch.

Henry Randall
Cecelia Newman
Decisions & Certificates
of Correction Branch
(703) 308-9390 Ext. 108

MORGAN LEWIS & BOCKIUS L.L.P.
1111 Pennsylvania Ave NW
Washington, DC 20004

HR/CBN

UNITED STATES PATENT AND TRADEMARK OFFICE

Commissioner for Patents
United States Patent and Trademark Office
P.O. Box 1450
Alexandria, VA 22313-1450
www.uspto.gov

Katten Muchin Zavis Roseman
525 West Monroe
Suite 1600
Chicago, IL 60661-3693

COPY MAILED
JAN 14 2010

In re Application of	:	
Depeng Bi, et al.	:	
Application No. 10/416,292	:	DECISION ON PETITION
Filed: May 6, 2003	:	TO WITHDRAW
Attorney Docket No. 10587.0052-00000	:	FROM RECORD
	:	

This is a decision on the Request to Withdraw as attorney or agent of record under 37 C.F.R. § 1.36(b), filed November 12, 2009.

The request is **NOT APPROVED** because it is moot.

A review of the file record indicates that the power of attorney to Katten Muchin Zavis Roseman has been revoked by the assignee of the patent application on December 15, 2009. Accordingly, the request to withdraw under 37 C.F.R. § 1.36(b) is moot.

All future communications from the Office will continue to be directed to the below-listed address until otherwise notified by applicant.

Telephone inquires concerning this decision should be directed to Terri Johnson at 571-272-2991.

Terri Johnson
Petitions Examiner
Office of Petitions

cc: **FINNEGAN, HENDERSON, FARABOW, GARRETT & DUNNER LLP**
901 New York Avenue, NW
Washington, DC 20001-4413

UNITED STATES PATENT AND TRADEMARK OFFICE

1-5-09

Commissioner for Patents
United States Patent and Trademark Office
P.O. Box 1450
Alexandria, VA 22313-1450
www.uspto.gov

Patent No. : 7,7443,939B2
Ser. No. : 10/416,297
Inventor(s) : Andrew Thurston
Issued : October 28, 2008
Docket No. : 006212.00005

Re: Request for Certificate of Correction

Consideration has been given your request for the issuance of a certificate of correction for the above-identified patent under the provisions of Rule(s) 1.322 or 1.323.

Assignees' names and addresses (assignment data) printed in a patent, are based *solely* on information supplied in the appropriate space for identifying the assignment data, i.e., item 3 of the Issue Fee Transmittal Form PTOL-85B. Granting of a request under 37 CFR 3.81(b) is required to correct applicant's error providing ***incorrect or erroneous*** assignment data, *before* issuance of a Certificate of Correction, under 37 CFR 1.323 *(see Manual of Patent Examining Procedures (M.P.E.P) Chp.1400, sect. 1481).* This procedure is required *at any time after the issue fee is paid*, including after issuance of the patent.

In view of the foregoing, your request is hereby denied.

A request to correct the Assignee under 37 CFR 3.81(b) should include:

A. **the processing fee set forth in 37 CFR 1.117(h) (currently $130);**
B. a statement that the failure to include the correct assignee name on the PTOL-85B was inadvertent; and
C. a copy of the Notice of Recordation of Assignment Document, reflecting the reel and frame number where the assignment(s) is recorded and/or reflecting proof of *the date* the assignment was submitted for recordation.

In the Request, Applicant(s) may request that the file be forwarded to Certificates of Correction Branch, for issuance of a Certificate of Correction, if the Request is granted.

Any request under 37 CFR 3.81(b) should be directed to the following address or facsimile number:

By mail: Mail Stop PETITIONS
Commissioner for Patents
Post Office Box 1450
Alexandria, VA 22313-1450

By hand: Customer Service Window
Mail Stop Petitions
Randolph Building
40l Dulany Street
Alexandria, VA 22314

By fax: (703) 872-9306
ATTN: Office of Petitions

If a fee (currently $100) was previously submitted for consideration of a Request for Certificate of Correction, under CFR 1.323, to correct assignment data, , no additional fee is required.

Eva James
For Mary Diggs
Decisions & Certificates
of Correction Branch
(703) **308-9390 ext. 124** or 125

Bradley J. Van Pelt
Banner & Witcoff, LTD
10 S Wacker Drive
Chicago, IL 60606

ej

UNITED STATES PATENT AND TRADEMARK OFFICE

Commissioner for Patents
United States Patent and Trademark Office
P.O. Box 1450
Alexandria, VA 22313-1450
www.uspto.gov

BANNER & WITCOFF, LTD.
TEN SOUTH WACKER DRIVE
SUITE 3000
CHICAGO, IL 60606

COPY MAILED

FEB 2 6 2009

OFFICE OF PETITIONS

In re Patent No. 7,443,939	:	
Issue Date: October 28, 2008	:	
Application No. 10/416,297	:	ON PETITION
Filed: May 8, 2003	:	
Attorney Docket No. 006212.00005	:	

This is a decision on the petition filed January 29, 2009, which is being treated as a request under 37 CFR 3.81(b)[1] to add the name of the assignee on the front page of the above-identified patent by way of a Certificate of Correction.

The petition is not signed by an attorney of record. Nevertheless, in accordance with 37 CFR 1.34, the signature of Mr. Bradley J. Van Pelt appearing on the correspondence shall constitute a representation to the United States Patent and Trademark Office that he is authorized to represent the particular party on whose behalf he acts.

The request is **GRANTED**.

Telephone inquiries concerning this decision may be directed to Alicia Kelley at (571) 272-6059. Inquiries regarding the issuance of a certificate of correction should be directed to the Certificate of Correction Branch at (571) 272-4200.

The Certificates of Correction Branch will be notified of this decision granting the petition under 37 CFR 3.81(b) and directing issuance of the requested Certificate of Correction.

/SDB/

Sherry D. Brinkley
Petitions Examiner
Office of Petitions

---

[1] *See* MPEP 1309, subsection II; and Official Gazette of June 22, 2004.

UNITED STATES PATENT AND TRADEMARK OFFICE

Commissioner for Patents
United States Patent and Trademark Office
P.O. Box 1450
Alexandria, VA 22313-1450
www.uspto.gov

COPY MAILED

JAN 2 2 2008

OFFICE OF PETITIONS

MORRISON & FOERSTER LLP
1650 TYSONS BOULEVARD, SUITE 400
MCLEAN, CA 22102

In re Application of	:	
FRANZ, et al.	:	
Application No. 10/416,305	:	DECISION ON PETITION
Filed: October 31, 2003	:	TO WITHDRAW
Attorney Docket No. **449122054400**	:	FROM RECORD
	:	

This is a decision on the Request to Withdraw as attorney or agent of record under 37 C.F.R. § 1.36(b), filed May 25, 2007.

The request is **NOT APPROVED** as moot.

A review of the file record indicates that the power of attorney to **MORRISON & FOERSTER LLP** has been revoked by the assignee of the patent application on August 2, 2007. Accordingly, the request to withdraw under 37 C.F.R. § 1.36(b) is moot.

All future communications from the Office will continue to be directed to the below-listed address until otherwise notified by applicant.

Telephone inquires concerning this decision should be directed to the undersigned at 571-272-7253.

Monica A. Graves
Petitions Examiner
Office of Petitions

cc: **BELL BOYD & LLOYD, LLP**
P.O. BOX 1135
CHICAGO, IL 60690

UNITED STATES PATENT AND TRADEMARK OFFICE

Commissioner for Patents
United States Patent and Trademark Office
P.O. Box 1450
Alexandria, VA 22313-1450
www.uspto.gov

DICKINSON WRIGHT, PLLC
1875 EYE STREET NW, SUITE 1200
WASHINGTON, DC 20006

MAILED

JUN 15 2010

OFFICE OF PETITIONS

In re Application of
Mathias FRANZ, et *al.*
Application No. 10/416,305
Filed: October 31, 2003
Attorney Docket No. **2000P20943 (NSN)**

DECISION ON PETITION TO WITHDRAW FROM RECORD

This is a decision on the Request to Withdraw as attorney or agent of record under 37 C.F.R. § 1.36(b), filed May 27, 2010.

The request is **DISMISSED** as moot.

A review of the file record indicates that the power of attorney to **DICKINSON WRIGHT, PLLC** has been revoked by the assignee of the patent application on May 27, 2010. Accordingly, the request to withdraw under 37 C.F.R. § 1.36(b) is moot.

All future communications from the Office will continue to be directed to the below-listed address until otherwise notified by applicant.

Telephone inquires concerning this decision should be directed to the undersigned at 571-272-7253.

/Monica A. Graves/
Petitions Examiner, Office of Petitions

cc: **LERNER GREENBERG STEMER LLP**
P O BOX 2480
HOLLYWOOD FL 33022-2480

06 APR 2004

#15

UNITED STATES PATENT and TRADEMARK OFFICE

COMMISSIONER FOR PATENTS
UNITED STATES PATENT AND TRADEMARK OFFICE
P.O. BOX 1450
ALEXANDRIA, VA 22313-1450
www.uspto.gov

Gary Abelev
Baker Botts LLP
30 Rockefeller Plaza
New York, NY 10112

In re Application of	:
Geiger et al.	:
Application No.: 10/416,319	: DECISION ON
PCT No.: PCT/US01/47925	:
Int. Filing Date: 08 November 2001	: PETITION
Priority Date: 08 November 2000	:
Attorney's Docket No.: A34280 PCT USA 067691.0183	: UNDER 37 CFR 1.47(a)
For: SYSTEM, PROCESS AND SOFTWARE	:
ARRANGEMENT FOR RECOGNIZING	:
HANDWRITTEN CHARACTERS	:

This is a decision in response to the declaration and petition filed under 37 CFR 1.47(a) on 02 January 2004 to accept the application without the signature of co-inventors Jong Oh and Mark Pipes. The required $130 petition fee has been paid.

BACKGROUND

On 08 November 2001, applicants filed international application PCT/US01/47924 that claimed priority of earlier United States applications, the earliest of which was filed 08 November 2000. A copy of the international application was communicated to the United States Patent and Trademark Office from the International Bureau on 16 May 2002. The thirty-month period for paying the basic national fee for the national stage in the United States expired at midnight on 08 May 2003.

On 08 May 2003, applicants filed a letter for entry into the national stage in the United States which was accompanied by, *inter alia*, a copy of the published international application, a preliminary amendment, an information disclosure statement and the basic national fee of $710 as required by 35 U.S.C. 371(c). These papers were assigned application number 10/416,319.

On 25 July 2003, the United States Patent and Trademark Office in its capacity as an Elected Office mailed the "NOTIFICATION OF MISSING REQUIREMENTS UNDER 35 U.S.C. 371 IN THE UNITED STATES DESIGNATED/ELECTED OFFICE (DO/EO/US)" (Form PCT/DO/EO/905) indicating that applicant was required to file an oath/declaration. The notification set a two-month time period in which to respond.

In order to satisfy the requirements of 35 U.S.C. 371(c)(4), on 02 January 2004, applicants filed the following papers:

1) a Response to Notification of Missing Requirements under 35 U.S.C. 371 in the United States Designated/Elected Office (DO/EO/US) including a Petition under 37 CFR 1.47(a);

2) the required petition fee;

3) a declaration signed by Abram M. Goldfinger, Executive Director, Industrial Liason/Technology Transfer, New York University on behalf of inventors Jong Oh and Mark Pipes;

4) a declaration of Gary Abelev; and,

5) a three month extension of time and the requisite fee.

DISCUSSION

A petition under 37 CFR 1.47(a) must be accompanied by (1) the fee under 37 CFR 1.17(h), (2) factual proof that the missing joint inventor refuses to execute the application or cannot be reached after diligent effort, (3) a statement of the last known address of the missing, and (4) an oath or declaration by each 37 CFR 1.47(a) applicant on his or her own behalf and on behalf of the non-signing inventor. The petition is missing item (2) above.

With respect to item (1), applicant has included the $130 petition fee. With respect to item (3), applicant has provided the last known address for inventors Pipes and Oh. With respect to item (4), applicants included a declaration including inventor Geiger's signature.

With respect to item (2), applicants are alleging that the actions of inventors Pipes and Oh constitute a refusal to sign the application. The allegation is based on the fact that inventors Pipes and Oh have not responded to the requests for signature. However, before it can be held that inventors Pipes and Oh have refused to respond, it must be established that they in fact received the application papers. No such proof of receipt has been presented. Applicant did not provide any receipts indicating whether inventors Oh and Pipes actually received the first mailed packages. Further, applicant has provided information regarding the second mailing to inventors Pipes and Jong, and the fact that neither package reached them at their last known address, but applicant did not indicate whether they resided there, or had moved. Further, applicant made no attempt beyond that mailing to find them. Absent a showing that inventors Pipes and Oh have received the application papers, it cannot be held that their actions constitute a refusal to sign.

CONCLUSION

For the reasons above, the petition under 37 CFR 1.47(a) is **DISMISSED** without prejudice.

If reconsideration on the merits of this petition is desired, a proper response must be filed within TWO (2) MONTHS from the mail date of this decision. Any reconsideration request should include a cover letter entitled "Renewed Petition Under 37 CFR 1.47(a)." No additional petition fee is required. Extensions of time may be obtained under 37 CFR 1.136(a).

Any further correspondence with respect to this matter should be addressed to the Mail Stop PCT, Commissioner for Patents, Office of PCT Legal Administration, P.O. Box 1450, Alexandria, Virginia 22313-1450, with the contents of the letter marked to the attention of the Office of PCT Legal Administration.

Debra S. Brittingham
PCT Special Programs Examiner
PCT Legal Office

Conferee: Richard Cole
PCT Legal Examiner
PCT Legal Office

DSB/RC:dsb
Telephone: (703) 308-3401
Facsimile: (703) 308-6459

19-MAY-2005

#7

UNITED STATES PATENT and TRADEMARK OFFICE

COMMISSIONER FOR PATENTS
UNITED STATES PATENT AND TRADEMARK OFFICE
P.O. BOX 1450
ALEXANDRIA, VA 22313-1450

www.uspto.gov

Gary Abelev
Baker Botts LLP
30 Rockefeller Plaza
New York, NY 10112

In re Application of	:
Geiger et al.	:
Application No.: 10/416,319	: DECISION ON
PCT No.: PCT/US01/47925	:
Int. Filing Date: 08 November 2001	: RENEWED PETITION
Priority Date: 08 November 2000	:
Attorney's Docket No.: A34280 PCT USA 067691.0183	: UNDER 37 CFR 1.47(a)
For: SYSTEM, PROCESS AND SOFTWARE	:
ARRANGEMENT FOR RECOGNIZING	:
HANDWRITTEN CHARACTERS	:

This is a decision in response to the declaration and renewed petition filed under 37 CFR 1.47(a) on 05 July 2004 to accept the application without the signature of co-inventors Jong Oh and Mark Pipes. No further petition fee is due.

BACKGROUND

On 08 November 2001, applicants filed international application PCT/US01/47924 that claimed priority of earlier United States applications, the earliest of which was filed 08 November 2000. A copy of the international application was communicated to the United States Patent and Trademark Office from the International Bureau on 16 May 2002. The thirty-month period for paying the basic national fee for the national stage in the United States expired at midnight on 08 May 2003.

On 08 May 2003, applicants filed a letter for entry into the national stage in the United States which was accompanied by, *inter alia*, a copy of the published international application, a preliminary amendment, an information disclosure statement and the basic national fee of $710 as required by 35 U.S.C. 371(c). These papers were assigned application number 10/416,319.

On 25 July 2003, the United States Patent and Trademark Office in its capacity as an Elected Office mailed the "NOTIFICATION OF MISSING REQUIREMENTS UNDER 35 U.S.C. 371 IN THE UNITED STATES DESIGNATED/ELECTED OFFICE (DO/EO/US)" (Form PCT/DO/EO/905) indicating that applicant was required to file an oath/declaration. The notification set a two-month time period in which to respond.

On 02 January 2004, applicants filed a petition under 37 CFR 1.47(a) requesting acceptance of the application without the signature of co-inventors Jong Oh and Mark Pipes.

On 06 April 2004, the petition was dismissed because applicants failed to provide proof of co-inventors Jong Oh and Mark Pipes refusal to sign.

On 08 July 2004, applicants filed the current renewed petition.

DISCUSSION

In the decision mailed 06 April 2004, applicant was told that before it can be held that inventors Pipes and Oh have refused to respond, it must be established that they in fact received the application papers. Mr. Abelev states that "the package sent to Mr. Oh's business address was safely received, but the package sent to Mr. Oh's home address was refused." This statement establishes that Mr. Oh is refusing to sign. With respect to Mr. Pipes, Mr. Abelev states that Mr. Pipes no longer lives as his last known address, and after searching publically available sources, no home address for Mr. Pipes could be located.

CONCLUSION

For the reasons above, the petition under 37 CFR 1.47(a) is **GRANTED**.

The Application Division and the International Division are authorized to accept the application as a 37 CFR 1.47(a) application and to mail a filing receipt. The application will be given an international filing date of 30 September 2000 under 35 U.S.C. 363, and a date 02 January 2004 under 35 U.S.C. 371(c)(1), (c)(2) and (c)(4).

As provided in 37 CFR 1.47(a), a notice of the filing of this application will be forwarded to the non-signing inventor at his last known address of record.

A notice of the filing of the application under 37 CFR 1.47(a) will be published in the Official Gazette.

The application is being returned to the International Division for processing as the U.S. National Stage of the above-identified international application.

Debra Brittingham
Office of PCT Legal Administration
DSB/LS:dsb

Tel: (571) 272-3280
Fax: (571) 273-0459

Leonard Smith
PCT Legal Examiner
Office of PCT Legal Administration

19 MAY 2005

UNITED STATES PATENT and TRADEMARK OFFICE

COMMISSIONER FOR PATENTS
UNITED STATES PATENT AND TRADEMARK OFFICE
P.O. BOX 1450
ALEXANDRIA, VA 22313-1450

www.uspto.gov

Mr. Jong Oh
31 Austin Street, #46
New Haven, CT 06515

In re Application of: Geiger, et al.
Application No.: 10/416,319
PCT No.: PCT/US01/47925
Int. Filing Date: 08 November 2001
Attorney's Docket No.: A34280 PCT USA 067691.0183
For: SYSTEM, PROCESS AND SOFTWARE ARRANGEMENT FOR RECOGNIZING HANDWRITTEN CHARACTERS

Dear Mr. Oh:

You are named as an inventor in the above identified United States patent application, filed under the provisions of 37 CFR 1.47(a) and 35 U.S.C. 116. Should a patent be granted, you will be designated as an inventor.

As a named inventor, you are entitled to inspect any paper in the file wrapper of the application, order copies of all or any part thereof (at a prepaid cost per 37 CFR 1.19) or to make your position of record in the application. Alternatively, you may arrange to do any of the preceding through a registered patent agent or attorney presenting written authorization from you. If you care to join in the application, counsel of record (see below) would presumably assist you. Joining in the application would entail the filing of an appropriate oath or declaration by you pursuant to 37 CFR 1.63.

Debra S. Brittingham
PCT Legal Examiner
Telephone: (571) 272-3280
Facsimile: (571) 273-0459

Leonard Smith
PCT Legal Examiner
Office of PCT Legal Administration

Counsel of Record: Gary Abelev
Baker Botts LLP
30 Rockefeller Plaza
New York, NY 10112

19 MAY 2005

UNITED STATES PATENT and TRADEMARK OFFICE

COMMISSIONER FOR PATENTS
UNITED STATES PATENT AND TRADEMARK OFFICE
P.O. BOX 1450
ALEXANDRIA, VA 22313-1450

www.uspto.gov

Mr. Mark Pipes
475 Memorial Drive, Room 312
Cambridge, 02139

In re Application of: Geiger, et al.
Application No.: 10/416,319
PCT No.: PCT/US01/47925
Int. Filing Date: 08 November 2001
Attorney's Docket No.: A34280 PCT USA 067691.0183
For: SYSTEM, PROCESS AND SOFTWARE ARRANGEMENT FOR RECOGNIZING HANDWRITTEN CHARACTERS

Dear Mr. Oh:

You are named as an inventor in the above identified United States patent application, filed under the provisions of 37 CFR 1.47(a) and 35 U.S.C. 116. Should a patent be granted, you will be designated as an inventor.

As a named inventor, you are entitled to inspect any paper in the file wrapper of the application, order copies of all or any part thereof (at a prepaid cost per 37 CFR 1.19) or to make your position of record in the application. Alternatively, you may arrange to do any of the preceding through a registered patent agent or attorney presenting written authorization from you. If you care to join in the application, counsel of record (see below) would presumably assist you. Joining in the application would entail the filing of an appropriate oath or declaration by you pursuant to 37 CFR 1.63.

Debra S. Brittingham
PCT Legal Examiner
Telephone: (571) 272-3280
Facsimile: (571) 273-0459

Leonard Smith
PCT Legal Examiner
Office of PCT Legal Administration

Counsel of Record: Gary Abelev
Baker Botts LLP
30 Rockefeller Plaza
New York, NY 10112

UNITED STATES PATENT and TRADEMARK OFFICE

COMMISSIONER FOR PATENTS
UNITED STATES PATENT AND TRADEMARK OFFICE
P.O. BOX 1450
ALEXANDRIA, VA 22313-1450

www.uspto.gov

OFFICIAL GAZETTE NOTICE

37 CFR 1.47 Notice by Publication

Notice is hereby given of the filing of an application with a petition under 37 CFR 1.47 requesting acceptance of the application without the signature of all inventors. The petition has been granted. A notice has been sent to the last known address of the non-signing inventors. The inventors whose signatures are missing (Mr. Jong Oh and Mr. Mark Pipes) may join in the application by promptly filing an appropriate oath or Declaration complying with 37 CFR 1.63. The international application number is PCT/US01/47925 and was filed on 08 November 2001 in the names of David Geiger, Jong Oh and Mark Pipes for the invention entitled SYSTEM, PROCESS AND SOFTWARE ARRANGEMENT FOR RECOGNIZING HANDWRITTEN CHARACTERS. The national stage application number is 10/416,319 and has a 35 U.S.C. 371(c)(1), (c)(2) and (c)(4) date of 02 January 2004.

UNITED STATES PATENT AND TRADEMARK OFFICE

Commissioner for Patents
United States Patent and Trademark Office
P.O. Box 1450
Alexandria, VA 22313-1450
www.uspto.gov

Katten Muchin Zavis
Suite 1600
525 West Monroe Street
Chicago IL 60661-3693

COPY MAILED

SEP 16 2005

OFFICE OF PETITIONS

In re Application of	:	
Depeng BI et al.	:	
Application No. 10/416,321	:	DECISION ON PETITIONS
Filed: May 6, 2003	:	UNDER 37 CFR 1.78(a)(6)
Attorney Docket No. 211748-00021	:	

This is a decision on the petition under 37 CFR § 1.78(a)(6), filed August 26, 2005, to accept an unintentionally delayed claim under 35 U.S.C. § 119(e) for the benefit of the prior-filed applications set forth in the concurrently filed amendment.

The petition was accompanied by an amendment to the first sentence of the specification following the title to include a reference to the prior-filed applications. While a reference to the prior-filed applications was not included in an ADS or in the first sentence of the specification following the title, a reference nevertheless was made in the declaration filed with the above-identified application.

The current procedure where a claim for priority under 37 CFR § 1.78(a)(6) is not included in the first sentence of the specification or in an ADS but does appear either in the oath or declaration or a transmittal letter filed with the application and the Office notes the claim for priority, no petition will be required to accept a late claim for priority. This is because the application would have been scheduled for publication on the basis of the information concerning the claim submitted elsewhere in the application within the time period set forth in 37 CFR § 1.78(a)(5)(ii). However, on the other hand, if the USPTO does not note the claim for priority to the prior-filed application(s) set forth in the oath or declaration or transmittal letter submitted with the application, a petition will be required to accept a late claim for priority under 37 CFR § 1.78(a)(6).[1] In the present case, the Office noted the claim for priority of the prior-filed applications in the declaration filed with the application, as shown by their inclusion on the filing receipt.

Therefore, the petition is unnecessary and is **DISMISSED AS INVOLVING A MOOT ISSUE**.

[1] *Note* MPEP 201.11 (III)(D) , pages 200-59 and 200-60 (Rev. 2. May 2004) and 66 Federal Register 67087 at 67089 (Dec. 28, 2001), effective December 28, 2001.

In view of the above, the $1370 petition fee submitted is unnecessary and will be refunded to petitioner's deposit account in due course.

Furthermore, the incorporation by reference to U.S. Provisional Application No. 60/247,492 is improper as an incorporation by reference statement added after an application's filing date is not effective because no new matter can be added to an application after its filing date (see 35 U.S.C. 132(a)).

Any questions concerning this decision on petition may be directed to David Bucci at (571) 272-7099. All other inquiries concerning either the examination procedures or status of the application should be directed to the Technology Center.

This application is being forwarded to the Examiner of Technology Center AU 3628 for appropriate action on the amendment filed **August 26, 2005**, including consideration by the examiner of the claim under 35 U.S.C. §§ 120 AND 119(e) for benefit of the prior-filed applications.

Frances Hicks for
Brian Hearn
Petitions Examiner
Office of Petitions

UNITED STATES PATENT AND TRADEMARK OFFICE

Commissioner for Patents
United States Patent and Trademark Office
P.O. Box 1450
Alexandria, VA 22313-1450
www.uspto.gov

MAILED

FEB 0 1 2010

OFFICE OF PETITIONS

MAILED

FEB 0 1 2010

OFFICE OF PETITIONS

Katten Muchin Zavis
Suite 1600
525 West Monroe Street
Chicago, IL 60661-3693

In re Application of	:	
Depeng Bi, et al.	:	
Application No. 10/416,321	:	DECISION ON PETITION
Filed: November 12, 2009	:	TO WITHDRAW
Attorney Docket No. 10587.0060-00000	:	FROM RECORD
	:	

This is a decision on the Request to Withdraw as attorney or agent of record under 37 C.F.R. § 1.36(b), filed November 12, 2009.

The request is **NOT APPROVED** because it is moot.

A review of the file record indicates that the power of attorney to Katten Muchin Zavis has been revoked by the assignee of the patent application on December 15, 2009. Accordingly, the request to withdraw under 37 C.F.R. § 1.36(b) is moot.

All future communications from the Office will continue to be directed to the below-listed address until otherwise notified by applicant.

Telephone inquires concerning this decision should be directed to Terri Johnson at 571-272-2991.

Terri Johnson
Petitions Examiner
Office of Petitions

cc: **Finnegan, Henderson, Farabow,**
Garrett & Dunner LLP
901 New York Avenue, NW
Washington, DC 20001-4413

UNITED STATES PATENT AND TRADEMARK OFFICE

Commissioner for Patents
United States Patent and Trademark Office
P.O. Box 1450
Alexandria, VA 22313-1450
www.uspto.gov

WENDEROTH, LIND & PONACK
2033 K STREET N.W.
SUITE 800
WASHINGTON DC 20006-1021

COPY MAILED
APR 18 2005
OFFICE OF PETITIONS

In re Application of	:	
Makoto Sunagawa et al	:	
Application No. 10/416,334	:	ON PETITION
Filed: May 8, 2003	:	
Attorney Docket No. 2003_0625A	:	

This is a decision on the petition, filed April 11, 2005, under 37 CFR 1.313(c)(2) to withdraw the above-identified application from issue after payment of the issue fee.

The petition is **GRANTED**.

The above-identified application is withdrawn from issue for consideration of a submission under 37 CFR 1.114 (request for continued examination). See 37 CFR 1.313(c)(2).

Petitioner is advised that the issue fee paid on February 15, 2005 in the above-identified application cannot be refunded. If, however, the above-identified application is again allowed, petitioner may request that it be applied towards the issue fee required by the new Notice of Allowance.[1]

Telephone inquiries should be directed to the undersigned at (571) 272-3208.

The examiner of Technology Center AU 1626 will consider the request for continued examination under 37 CFR 1.114.

Karen Creasy

Karen Creasy
Petitions Examiner
Office of Petitions
Office of the Deputy Commissioner
for Patent Examination Policy

---

[1] The request to apply the issue fee to the new Notice may be satisfied by completing and returning the new Issue Fee Transmittal Form PTOL-85(b), which includes the following language thereon: "Commissioner for Patents is requested to apply the Issue Fee and Publication Fee (if any) or re-apply any previously paid issue fee to the application identified above." Petitioner is advised that, whether a fee is indicated as being due or not, the Issue Fee Transmittal Form **must** be completed and timely submitted to avoid abandonment. Note the language in bold text on the first page of the Notice of Allowance and Fee(s) Due (PTOL-85).

UNITED STATES PATENT AND TRADEMARK OFFICE

UNITED STATES DEPARTMENT OF COMMERCE
United States Patent and Trademark Office
Address: COMMISSIONER FOR PATENTS
P.O. Box 1450
Alexandria, Virginia 22313-1450
www.uspto.gov

DICKSTEIN SHAPIRO LLP
1633 Broadway
NEW YORK, NY 10019

Mail Date: 04/20/2010

Applicant	: Markwart Kunz	: DECISION ON REQUEST FOR
Patent Number	: 7576070	: RECALCULATION of PATENT
Issue Date	: 08/18/2009	: TERM ADJUSTMENT IN VIEW
Appliction No	: 10/416,347	: OF WYETH AND NOTICE OF INTENT TO
Filed	: 09/29/2003	: ISSUE CERTIFICATE OF CORRECTION
		:

The Request for Recalculation is **GRANTED** to the extent indicated.

The patent term adjustment has been determined to be **709** days. The USPTO will *sua sponte* issue a certificate of correction reflecting the amount of PTA days determined by the recalculation.

Prior to the issuance of the certificate of correction, the USPTO will afford patentee an opportunity to be heard and request reconsideration. Accordingly, patentee has **one month or thirty (30) days**, whichever is longer, to file a request for reconsideration of this patent term adjustment calculation. See 35 U.S.C. 154(b)(3)(B)(ii) and 37 CFR 1.322(a)(4). No extensions of time will be granted under 37 CFR 1.136.

Patentee should use document code PET.OP if electronically filing a request for reconsideration of this patent term adjustment calculation. The patentee must also include the information required by 37 CFR 1.705(b)(2) and the fee required by 37 CFR 1.18(e). If patentee does not file a timely request for reconsideration of this patent term adjustment calculation including the information required by 37 CFR 1.705(b)(2) and the fee required by 37 CFR 1.18(e), the USPTO will issue a certificate of correction reflecting the PTA determination noted above.

Patentee should be aware that in order to preserve the right to review in the United States District Court for the District of Columbia of the USPTO patent term adjustment determination, patentee must ensure that he or she also take the steps required under 35 U.S.C. 154(b)(4)(A) in a timely manner. Nothing in the request for recalculation should be construed as providing an alternative time frame for commencing a civil action under 35 U.S.C. 154(b)(4)(A).

Any questions concerning this decision should be directed to the Office of Patent Legal Administration at 571-272-7702.

UNITED STATES PATENT AND TRADEMARK OFFICE

Commissioner for Patents
United States Patent and Trademark Office
P.O. Box 1450
Alexandria, VA 22313-1450
www.uspto.gov

Patent No. : 7,588,178 B2
Ser. No. : 10/416,352
Inventor(s) : Olav Vennemann, et al.
Issued : September 15, 2009
Title : **CONNECTING CONDUITS FOR FLUIDS**
Docket No. : **7096SO-16**

Re: Request for Certificate of Correction

Consideration has been given your request for the issuance of a certificate of correction for the above-identified patent under the provisions of Rule 1.323.

Assignees' names and addresses (assignment data) printed in a patent, are based *solely* on information supplied in the appropriate space for identifying the assignment data, i.e., item 3 of the Issue Fee Transmittal Form PTOL-85B. Granting of a request under 37 CFR 3.81(b) is required to correct applicant's error providing ***incorrect or erroneous*** assignment data, *before* issuance of a Certificate of Correction, under 37 CFR 1.323 *(see Manual of Patent Examining Procedures (M.P.E.P) Chp.1400, sect. 1481).* This procedure is required *at any time after the issue fee is paid*, including after issuance of the patent.

In view of the foregoing, your request, in this mater, is hereby denied.

A request to correct the Assignee under 37 CFR 3.81(b) should include:

A. **the processing fee set forth in 37 CFR 1.117(h) (currently $130);**
B. a statement that the failure to include the correct assignee name on the PTOL-85B was inadvertent; and
C. a copy of the Notice of Recordation of Assignment Document, reflecting the reel and frame number where the assignment(s) is recorded and/or reflecting proof of *the date* the assignment was submitted for recordation.

In the Request, Applicant(s) may request that the file be forwarded to Certificates of Correction Branch, for issuance of a Certificate of Correction, if the Request is granted.

Any request under 37 CFR 3.81(b) should be directed to the following address or facsimile number:

By mail: Mail Stop PETITIONS
Commissioner for Patents
Post Office Box 1450
Alexandria, VA 22313-1450

By hand: Customer Service Window
Mail Stop Petitions
Randolph Building
40l Dulany Street
Alexandria, VA 22314

By fax: (571) 273-0025
ATTN: Office of Petitions

If a fee (currently $100) was previously submitted for consideration of a Request for Certificate of Correction, under CFR 1.323, to correct assignment data, , no additional fee is required.

Antonio Johnson
For Mary F. Diggs
Decisions & Certificates
of Correction Branch
(571)272-0483

SHERIDAN ROSS PC
1560 BROADWAY
SUITE 1200
DENVER CO 80202

UNITED STATES PATENT AND TRADEMARK OFFICE

Commissioner for Patents
United States Patent and Trademark Office
P.O. Box 1450
Alexandria, VA 22313-1450
www.uspto.gov

MAILED

MAY 24 2010

OFFICE OF PETITIONS

SHERIDAN ROSS PC
1560 BROADWAY
SUITE 1200
DENVER CO 80202

In re Patent No. 7,588,178	:	
Issue Date: September 15, 2009	:	
Application No. 10/416,352	:	DECISION ON PETITION
Filed: December 15, 2003	:	
Attorney Docket No. 7096SO-16	:	

This is a decision on the "PETITION FOR CORRECTION OF NAME OF ASSIGNEE UNDER RULE 3.81(B)", filed March 5, 2010.

The petition is **GRANTED**.

An application may issue in the name of an assignee rather than the applicant if requested prior to issuance of a patent.[1] However, in the event the request is not made prior to issuance, a Certificate of Correction under 37 CFR 1.323 may be requested. A request for a Certificate of Correction under 37 CFR 1.323 to correct the assignee's name will not be granted unless a petition under 37 CFR 3.81(b) is granted. Such request under 37 CFR 3.81(b) should include:

(A) the processing fee required by 37 CFR 1.17(i);

(B) a request for issuance of the application in the name of the assignee, or a request that a patent be corrected to state the name of the assignee;

[1] See 37 CFR 3.81.

(C) a statement that the assignment was submitted for recordation as set forth in 37 CFR 3.11 before issuance of the patent; and

(D) a request for a certificate of correction under 37 CFR 1.323 accompanied by the fee set forth in 37 CFR 1.20(a).[2]

The $130 processing fee set forth in 37 CFR 1.17(i) has been charged to Deposit Account No. 19-1970, as authorized. The $100 fee for the Certificate of Correction set forth in 37 CFR 1.20(a) was previously paid on December 11, 2009.

The file is being forwarded to the Certificate of Corrections Branch for issuance of the requested Certificate of Correction.

Telephone inquiries related to this decision should be directed to the undersigned at (571)272-3207.

Cliff Congo
Petitions Attorney
Office of Petitions

[2] MPEP 307.

16 NOV 2004

#6

UNITED STATES PATENT AND TRADEMARK OFFICE

COMMISSIONER FOR PATENTS
UNITED STATES PATENT AND TRADEMARK OFFICE
P.O. BOX 1450
ALEXANDRIA, VA 22313-1450
www.uspto.gov

William R. Evans
LADAS & PARRY
26 West 61st Street
New York, NY 10023

In re Application of:	:	
LIANG, Guangqi	:	
U.S. Application No.: 10/416,374	:	DECISION ON REFUND
PCT No.: PCT/CN01/01517	:	REQUEST AND PETITION
International Filing Date: 30 October 2001	:	
Priority Date: 13 November 2000	:	
Attorney's Docket No.: U 014599-9	:	
For: SUCKING ATOMIZER FOR GASOLINE-	:	
OXYGEN CUTTING & WELDING	:	

This decision is issued in response to applicant's request for refund filed 25 June 2003 and the petition to withdraw the holding of abandonment filed 22 October 2004. No petition fees are required.

BACKGROUND

On 30 October 2001, applicant filed international application PCT/CN01/01517 which claimed a priority date of 13 November 2000 and which designated the United States. On 16 May 2002, a copy of the international application was communicated to the United States Patent And Trademark Office (USPTO) by the International Bureau (IB). The deadline for payment of the basic national fee was thirty months from the priority date, i.e., 13 May 2003.

On 12 May 2003, applicant filed a transmittal letter for entry into the national stage in the United States accompanied by, among other materials, payment for the basic national fee and a translation of the international application into English.

On 25 June 2003, applicant filed a statement asserting small entity status and a request for a refund of half of the large entity basic national fee paid on 12 May 2003. This request for refund is considered below.

On 02 September 2003, the United States Designated/Elected Office (DO/EO/US) mailed a Notification Of Missing Requirements (Form PCT/DO/EO/905) indicating that an oath or declaration in compliance with 37 CFR 1.497 and the surcharge for filing the oath or declaration later than thirty months after the priority date were required.

On 15 October 2004, the DO/EO/US mailed a Notification Of Abandonment (Form PCT/DO/EO/909) indicating that the application was abandoned for failure to respond to the Notification Of Missing Requirements.

On 22 October 2004, applicant filed the petition for withdrawal of the holding of abandonment considered herein. The petition asserts that on 10 November 2003, applicant filed a timely response to the Notification Of Missing Requirements that included an executed declaration, the surcharge payment, and the fee for a one month extension of time to respond. Attached to the petition are copies of the materials purportedly filed on 10 November 2003, as well as a copy of the related "Express Mail" label and a copy of the processed check filed at that time.

DISCUSSION

1. Request For Fee Refund

Applicant's written assertion of small entity status and request for refund were filed within three months of the 12 May 2003 payment of the large entity basic national fee, as required under 37 CFR 1.28, and includes a proper assertion of small entity status under 37 CFR 1.27. The request is therefore appropriately granted.

Deposit Account No. 12-0425 will be credited with a refund of $530, one half of the large entity basic national fee paid by applicant on 12 May 2003.

2. Petition To Withdraw Abandonment

Applicant asserts that a proper response to the Notification Of Missing Requirements was filed by "Express Mail" on 10 November 2003. These materials are not present in the application file.

37 CFR 1.10 (e) states the following:

> (e) Any person mailing correspondence addressed as set out in § 1.1(a) to the Office with sufficient postage utilizing the "Express Mail Post Office to Addressee" service of the USPS, but not received by the Office, may petition the Commissioner to consider such correspondence filed in the Office on the USPS deposit date, provided that:
>
> (1) The petition is filed promptly after the person becomes aware that the Office has no evidence of receipt of the correspondence;
>
> (2) The number of the "Express Mail" mailing label was placed on the paper(s) or fee(s) that constitute the correspondence prior to the original mailing by "Express Mail";
>
> (3) The petition includes a copy of the originally deposited paper(s) or fee(s) that constitute the correspondence showing the number

> of the "Express Mail" mailing label thereon, a copy of any returned postcard receipt, a copy of the "Express Mail" mailing label showing the "date-in," a copy of any other official notation by the USPS relied upon to show the date of deposit, and, if the requested filing date is a date other than the "date-in" on the "Express Mail" mailing label or other official notation entered by the USPS, a showing pursuant to paragraph (d)(3) of this section that the requested filing date was the date the correspondence was deposited in "Express Mail Post Office to Addressee" service prior to the last scheduled pickup for that day; and
>
> (4) The petition includes a statement which establishes, to the satisfaction of the Commissioner, the original deposit of the correspondence, and that the copies of the correspondence, the copy of the "Express Mail" mailing label, the copy of any returned postcard receipt, and any official notation entered by the USPS are true copies of the originally mailed correspondence and original "Express Mail" mailing label, returned postcard receipt, and official notation entered by the USPS. Such statement must be a verified statement if made by a person other than a practitioner as defined in § 10.1(r) of this chapter.

Applicant has satisfied these requirements. The petition was filed one week after the mailing of the Notification Of Abandonment that informed applicant that the 10 November 2003 submission had not been received; item (1) is therefore satisfied.

Regarding items (2) and (3), the copy of the "Completion Of Filing Requirements For International Application Entering National Stage In U.S. Elected/Designated Office (DO/EO/US) Under 35 U.S.C. § 371" included with the petition bears a certification under 37 CFR 1.10 that lists the "Express Mail" label number (EV327550804US), identifies the deposit date as 10 November 2003, and itemizes the materials filed therewith (i.e., the declaration, a small entity statement, and payment of the $55 small entity extension fee and the $65 small entity surcharge). Copies of all these materials (including the processed check) are included with the petition. Items (2) and (3) are therefore satisfied.

As for item (4), the statement of counsel filed with the petition, identifying the attached materials as copies of the materials filed 10 November 2003 and the related Express Mail label, is considered sufficient to establish the original deposit of these itemized materials in Express Mail envelope EV327550804US on 10 November 2003.

Applicant has satisfied all the requirements for a grantable petition under 37 CFR 1.10(e). It is therefore concluded that the materials attached to the present petition, including the executed declaration, surcharge payment, and extension fee, were originally filed 10 November 2003 as a timely response to the Notification Of Missing Requirements mailed 02 September 2003. The Notification Of Abandonment mailed 15 October 2004, based as it was

on applicant's purported failure to file a response to the Notification Of Missing Requirements, is appropriately vacated.

It is noted that the declaration filed on 10 November 2003 satisfies the requirements of 37 CFR 1.497.

In addition, it is noted that, upon receipt of the present petition, Deposit Account No. 12-0425 was charged again for the $65 surcharge and $55 extension fee. Because these fees had already been paid by applicant, Deposit Account No. 12-0425 will be refunded these charges.

CONCLUSION

Applicant's request for refund filed 25 June 2003 is **GRANTED**. Deposit Account No. 12-0425 will be credited with a refund of $530, one half of the large entity basic national fee paid by applicant on 12 May 2003.

Applicant's petition under 37 CFR 1.181 and 37 CFR 1.10(e) filed 22 October 2004 is **GRANTED**. The materials attached to the present petition, including the executed declaration, extension fee, and surcharge payment, are considered to have been filed on 10 November 2003 as a timely response to the Notification Of Missing Requirements.

The Notification Of Abandonment mailed 15 October 2004 is hereby **VACATED**.

This application is being returned to the National Stage Processing Branch of the Office of PCT Operations for further processing in accord with this decision. The date under 35 U.S.C. 371(c)(1), (c)(2) and (c)(4) is 22 October 2004.

Richard M. Ross
PCT Petitions Attorney
PCT Legal Office
Telephone: (571) 272-3296
Facsimile: (571) 273-0459

UNITED STATES PATENT AND TRADEMARK OFFICE

Commissioner for Patents
United States Patent and Trademark Office
P.O. Box 1450
Alexandria, VA 22313-1450
www.uspto.gov

COPY MAILED
SEP 25 2006
OFFICE OF PETITIONS

SMITHKLINE BEECHAM
CORPORATION
CORPORATE INTELLECTUAL
PROPERTY-US, UW2220
P. O. BOX 1539
KING OF PRUSSIA, PA 19406-0939

In re Application of

Hadley, et al. :

Application No. 10/416,377

: DECISION ON PETITION

Filed: November 11, 2003

:

Attorney Docket No. P32710

This is a decision on the petition under 37 CFR 1.137(b), filed August 3, 2006, to revive the above-identified application.

The petition is **GRANTED**.

The above-cited application became abandoned for failure to reply in a timely manner to the non-final Office action mailed December 6, 2005, which set a shortened statutory period for reply of three (3) months from its mailing date. No extension of time pursuant to 37 CFR 1.136(a) was obtained within the allowable period. Accordingly, the application became abandoned on March 7, 2006. A Notice of Abandonment was mailed on July 21, 2005

The amendment filed August 3, 2006, is noted.

The application is being forwarded to Technology Center 1600, GAU 1624 for further processing.

Telephone inquiries concerning this decision should be directed to the undersigned at (571) 272-3222.

Kenya A. McLaughlin
Petitions Attorney
Office of Petitions

UNITED STATES PATENT AND TRADEMARK OFFICE

UNITED STATES DEPARTMENT OF COMMERCE
United States Patent and Trademark Office
Address: COMMISSIONER FOR PATENTS
P.O. Box 1450
Alexandria, Virginia 22313-1450
www.uspto.gov

HOFFMANN & BARON, LLP
6900 JERICHO TURNPIKE
SYOSSET, NY 11791

Mail Date: 04/21/2010

Applicant	: Glen M. de Vries	: DECISION ON REQUEST FOR
Patent Number	: 7596541	: RECALCULATION of PATENT
Issue Date	: 09/29/2009	: TERM ADJUSTMENT IN VIEW
Appliction No	: 10/416,380	: OF WYETH AND NOTICE OF INTENT TO
Filed	: 05/09/2003	: ISSUE CERTIFICATE OF CORRECTION
		:

The Request for Recalculation is **GRANTED** to the extent indicated.

The patent term adjustment has been determined to be **861** days. The USPTO will *sua sponte* issue a certificate of correction reflecting the amount of PTA days determined by the recalculation.

Prior to the issuance of the certificate of correction, the USPTO will afford patentee an opportunity to be heard and request reconsideration. Accordingly, patentee has **one month or thirty (30) days**, whichever is longer, to file a request for reconsideration of this patent term adjustment calculation. See 35 U.S.C. 154(b)(3)(B)(ii) and 37 CFR 1.322(a)(4). No extensions of time will be granted under 37 CFR 1.136.

Patentee should use document code PET.OP if electronically filing a request for reconsideration of this patent term adjustment calculation. The patentee must also include the information required by 37 CFR 1.705(b)(2) and the fee required by 37 CFR 1.18(e). If patentee does not file a timely request for reconsideration of this patent term adjustment calculation including the information required by 37 CFR 1.705(b)(2) and the fee required by 37 CFR 1.18(e), the USPTO will issue a certificate of correction reflecting the PTA determination noted above.

Patentee should be aware that in order to preserve the right to review in the United States District Court for the District of Columbia of the USPTO patent term adjustment determination, patentee must ensure that he or she also take the steps required under 35 U.S.C. 154(b)(4)(A) in a timely manner. Nothing in the request for recalculation should be construed as providing an alternative time frame for commencing a civil action under 35 U.S.C. 154(b)(4)(A).

Any questions concerning this decision should be directed to the Office of Patent Legal Administration at 571-272-7702.

UNITED STATES PATENT AND TRADEMARK OFFICE

Commissioner for Patents
United States Patent and Trademark Office
P.O. Box 1450
Alexandria, VA 22313-1450
www.uspto.gov

WHITE & CASE LLP
PATENT DEPARTMENT
1155 AVENUE OF THE AMERICAS
NEW YORK, NY 10036

COPY MAILED

JAN 17 2006

OFFICE OF PETITIONS

ON PETITION

In re Application of :
Lee et al. :
Application No. 10/416,410 :
Filed: May 12, 2003 :
Attorney Docket No. 1602034-0003 :

This is a decision on the petition under 37 CFR 1.181, filed June 20, 2005, to withdraw the holding of abandonment.

The petition is **granted.**

The above-identified application was deemed abandoned for failure to reply in a timely manner to the non-final Office action mailed September 23, 2004, which set a shortened statutory period for reply of one (1) month or thirty (30) days (whichever is later). No extensions of time under the provisions of 37 CFR 1.136(a) were obtained. Accordingly, the above-identified application was deemed abandoned as of midnight on October 23, 2004. A Notice of Abandonment was mailed on June 2, 2005.

Petitioner contends a reply was timely filed. A review of the electronic file wrapper indicates the presence of the timely filed reply. Therefore, the Notice of Abandonment is hereby vacated and the holding of abandonment withdrawn.

Technology Center Art Unit 2162 will be notified of the instant decision so that the examiner may further consider the merits of the application in due course.

Telephone inquiries should be directed to Petitions Attorney Steven Brantley at (571) 272-3203.

Charles Steven Brantley
Petitions Attorney
Office of Petitions

UNITED STATES PATENT AND TRADEMARK OFFICE

Commissioner for Patents
United States Patent and Trademark Office
P.O. Box 1450
Alexandria, VA 22313-1450
www.uspto.gov

KHORSANDI PATENT LAW GROUP, A.L.C.
140 S. LAKE., SUITE 312
PASADENA CA 91101-4710

COPY MAILED

JUN 13 2008

OFFICE OF PETITIONS

In re Application of	:	
Charles D. Cole, III	:	LETTER REGARDING PATENT
Application No. 10/416,419	:	TERM ADJUSTMENT
Filed: May 8, 2003	:	
Attorney Docket No. PSAE0007US/MRK	:	

This letter is in response to the "APPLICATION FOR RECONSIDERATION OF PATENT TERM ADJUSTMENT INDICATED IN NOTICE OF ALLOWANCE 37 C.F.R. § 1.705(b)," filed December 27, 2007. Pursuant to applicant's duty of good faith and candor to the Office, applicant requests that the determination of patent term adjustment under 35 U.S.C. 154(b) be reviewed for accuracy. Applicant states that the patent term adjustment for the above-identified application should be set at three hundred ninety-seven (397) days instead of seven hundred three (703) days.

The request for review of the initial Determination of Patent Term Adjustment is **granted**.

The Office has updated the PAIR screen to reflect that the correct Patent Term Adjustment (PTA) determination at the time of the mailing of the notice of allowance is **three hundred ninety-seven (397) days**. A copy of the updated PAIR screen, showing the correct determination, is enclosed.

On October 2, 2007, the Office mailed the Determination of Patent Term Adjustment under 35 U.S.C. 154(b) in the above-identified application. The Notice stated that the patent term adjustment to date is seven hundred three (703) days. On December 27, 2007, applicant submitted the instant comment.

Applicant asserts that the Office's delay pursuant to 37 CFR 1.703(a)(1) was incorrectly calculated as seven hundred forty-five (745) days. Applicant states that the present application fulfilled the requirements of 35 U.S.C. 371 on May 8, 2003, and that the first action under 35 U.S.C. 132 was mailed on September 22, 2005. Applicant avers that period of adjustment should be four hundred forty-one (441) days.

The application history has been reviewed and it has been determined that the initial patent term adjustment of seven hundred three (703) days is incorrect.

Pursuant to 37 CFR 1.703(a)(1), the period of adjustment of patent term due to the failure of the Office to take action within a specified time frame is the sum of the following periods:

(1) The number of days, if any, in the period beginning on the day after the date that is fourteen months after the date on which the application was filed under 35 U.S.C. 111(a) or fulfilled the requirements of 35 U.S.C. 371 and ending on the date of mailing of either an action under 35 U.S.C. 132, or a notice of allowance under 35 U.S.C. 151, whichever occurs first[.]

The period of adjustment under 37 CFR 1.703(a)(1) should be four hundred forty-one (441) days, the number of days in the period beginning on the day after the date that is fourteen months after the date on which the application fulfilled the requirements of 35 U.S.C. 371, July 9, 2004, and ending on the date of mailing of the nonfinal Office action, September 22, 2005.

Additionally, applicant asserts that applicant was not assessed any period of delay for filing a Request for Continued Examination (RCE) on June 23, 2006, in excess of the three-month period from the March 21, 2006 mailing date of the final rejection. See 37 CFR 1.704(b).

Pursuant to 37 CFR 1.704(b):

> With respect to the grounds for adjustment set forth in §§ 1.702(a) through (e), and in particular the ground of adjustment set forth in § 1.702(b), an applicant shall be

> deemed to have failed to engage in reasonable efforts to conclude processing or examination of an application for the cumulative total of any periods of time in excess of three months that are taken to reply to any notice or action by the Office making any rejection, objection, argument, or other request, measuring such three-month period from the date the notice or action was mailed or given to the applicant, in which case the period of adjustment set forth in § 1.703 shall be reduced by the number of days, if any, beginning on the day after the date that is three months after the date of mailing or transmission of the Office communication notifying the applicant of the rejection, objection, argument, or other request and ending on the date the reply was filed. The period, or shortened statutory period, for reply that is set in the Office action or notice has no effect on the three-month period set forth in this paragraph.

In accordance with 37 CFR 1.704(b), the period of adjustment of the term of the patent should be reduced by two (2) days, the number of days in the period beginning on the day after the date that is three months after the date of mailing of the Office action under 35 U.S.C. 132, June 22, 2006, and ending on the date the reply was filed, June 23, 2006.

In view thereof, the correct patent term adjustment at the time of the mailing of the notice of allowance is **three hundred ninety-seven 397 days** (441 days of Office delay - 44 days of applicant delay).

As this letter was submitted as an advisement to the Office of an error in applicant's favor, the Office will not assess the $200.00 fee as set forth in 37 CFR 1.18(e). The Office thanks applicant for applicant's good faith and candor in bringing this to the attention of the Office.

Applicant is reminded that any delays by the Office pursuant to 37 CFR 1.702(a)(4) and 1.702(b) and any applicant delays under 37 CFR 1.704(c)(10) will be calculated at the time of the issuance of the patent and applicants will be notified in the Issue Notification letter that is mailed to applicant approximately three weeks prior to issuance.

The Office of Data Management has been advised of this decision. This matter is being referred to the Office of Data Management for issuance of the patent.

Telephone inquiries regarding this matter should be directed to Christina Tartera Donnell, Senior Petitions Attorney, at (571) 272-3211.

Kery A. Fries
Senior Legal Advisor
Office of Patent Legal Administration
Office of the Deputy Commissioner
For Patent Examination Policy

Enclosure: Copy of updated PAIR screen

Day : Thursday
Date: 6/12/2008

PALM INTRANET

Time: 10:23:55

PTA Calculations for Application: 10/416419

Application Filing Date:	05/08/2003	PTO Delay (PTO):	745
Issue Date of Patent:		Three Years:	0
Pre-Issue Petitions:	0	Applicant Delay (APPL):	42
Post-Issue Petitions:	0	Total PTA (days):	397
PTO Delay Adjustment:	-306		

File Contents History

Number	Date	Contents Description	PTO	APPL	START
58	06/12/2008	ADJUSTMENT OF PTA CALCULATION BY PTO		306	
50	10/02/2007	MAIL NOTICE OF ALLOWANCE			
49	10/02/2007	MAIL EXAMINER'S AMENDMENT			
48	09/27/2007	ISSUE REVISION COMPLETED			
47	09/27/2007	DOCUMENT VERIFICATION			
46	09/27/2007	NOTICE OF ALLOWANCE DATA VERIFICATION COMPLETED			
45	09/27/2007	CASE DOCKETED TO EXAMINER IN GAU			
44	09/25/2007	EXAMINER'S AMENDMENT COMMUNICATION			
43	09/25/2007	NOTICE OF ALLOWABILITY			
42	07/16/2007	DATE FORWARDED TO EXAMINER			
41	07/11/2007	AMENDMENT SUBMITTED/ENTERED WITH FILING OF CPA/RCE			
40	07/16/2007	DATE FORWARDED TO EXAMINER			
39	07/11/2007	REQUEST FOR CONTINUED EXAMINATION (RCE)		33	35
38	07/16/2007	DISPOSAL FOR A RCE/CPA/129 (EXPRESS ABANDONMENT IF CPA)			
37	07/11/2007	REQUEST FOR EXTENSION OF TIME - GRANTED			
36	07/11/2007	WORKFLOW - REQUEST FOR RCE - BEGIN			
35	03/08/2007	MAIL FINAL REJECTION (PTOL - 326)			
34	03/05/2007	FINAL REJECTION			
33	12/28/2006	DATE FORWARDED TO EXAMINER			
32	12/11/2006	RESPONSE AFTER NON-FINAL ACTION		4	31
31	09/07/2006	MAIL NON-FINAL REJECTION			
30	09/05/2006	NON-FINAL REJECTION			

29	06/28/2006	DATE FORWARDED TO EXAMINER			
28	06/23/2006	AMENDMENT SUBMITTED/ENTERED WITH FILING OF CPA/RCE			
27	06/28/2006	DATE FORWARDED TO EXAMINER			
26	06/26/2003	REQUEST FOR CONTINUED EXAMINATION (RCE)			
25	06/28/2006	DISPOSAL FOR A RCE/CPA/129 (EXPRESS ABANDONMENT IF CPA)			
24	06/23/2006	WORKFLOW - REQUEST FOR RCE - BEGIN			
23	04/13/2006	CORRESPONDENCE ADDRESS CHANGE			
22	03/21/2006	MAIL FINAL REJECTION (PTOL - 326)			
21	03/20/2006	FINAL REJECTION			
20	01/10/2006	DATE FORWARDED TO EXAMINER			
19	12/27/2005	RESPONSE AFTER NON-FINAL ACTION		5	18
18	09/22/2005	MAIL NON-FINAL REJECTION	745		1
17	09/19/2005	NON-FINAL REJECTION			
16	07/15/2005	INFORMATION DISCLOSURE STATEMENT CONSIDERED			
15	05/08/2003	INFORMATION DISCLOSURE STATEMENT CONSIDERED			
14.7	07/15/2005	INFORMATION DISCLOSURE STATEMENT (IDS) FILED			
14	07/15/2005	INFORMATION DISCLOSURE STATEMENT (IDS) FILED			
13	07/15/2005	REFERENCE CAPTURE ON IDS			
12	07/20/2005	CASE DOCKETED TO EXAMINER IN GAU			
11	07/20/2004	CASE DOCKETED TO EXAMINER IN GAU			
10	02/02/2004	REFERENCE CAPTURE ON IDS			
9.7	05/08/2003	INFORMATION DISCLOSURE STATEMENT (IDS) FILED			
9	05/08/2003	INFORMATION DISCLOSURE STATEMENT (IDS) FILED			
8	05/08/2003	PRELIMINARY AMENDMENT			
7	02/02/2004	IFW TSS PROCESSING BY TECH CENTER COMPLETE			
6	02/02/2004	CASE DOCKETED TO EXAMINER IN GAU			
5	11/12/2003	CLEARED BY OIPE CSR			
4	09/23/2003	IFW SCAN & PACR AUTO SECURITY REVIEW			
3	07/25/2003	APPLICATION DISPATCHED FROM OIPE			
2	07/25/2003	NOTICE OF DO/EO ACCEPTANCE MAILED			

1	05/08/2003	INITIAL EXAM TEAM NN			

Search Another: Application# Search

EXPLANATION OF PTA CALCULATION

EXPLANATION OF PTE CALCULATION

To go back, right click here and select Back. To go forward, right click here and select Forward. To refresh, right click here and select Refresh.

Back to OASIS | Home page

06 DEC 2004

#8

UNITED STATES PATENT AND TRADEMARK OFFICE

COMMISSIONER FOR PATENTS
UNITED STATES PATENT AND TRADEMARK OFFICE
P.O. BOX 1450
ALEXANDRIA, VA 22313-1450
www.uspto.gov

GlaxoSmithKline
Corporate Intellectual Property - UW2220
P.O. Box 1539
King of Prussia, PA 19406-0930

In re Application of	:	
DEAN et al.	:	
Application No.: 10/416,432	:	DECISION ON PETITION
PCT No.: PCT/GB01/04995	:	
Int. Filing Date: 12 November 2001	:	
Priority Date: 11 November 2000	:	
Attorney Docket No.: P32708	:	
For: PLEUROMUTILIN DERIVATIVES WITH ANTIMICROBIAL ACTIVITY		

This decision is in response to applicants' "Petition under 37 CFR 1.181" filed 04 November 2004. No petition fee is required.

BACKGROUND

On 12 November 2001, applicants filed international application PCT/GB01/04995 which claimed a priority date of 11 November 2000. A copy of the international application was communicated to the United States Patent and Trademark Office from the International Bureau on 16 May 2002. Pursuant to 37 CFR 1.495, the deadline for payment of the basic national fee was to expire 30 months from the priority date, 11 May 2003.

On 09 May 2003, applicants filed a Transmittal Letter for entry into the national stage accompanied, *inter alia,* by: the requisite basic national fee; a copy of the international application; and a preliminary amendment.

On 19 August 2003, the United States Designated Office (DO/EO/US) mailed a Notification Missing Requirements under 35 U.S.C. 371 (Form PCT/DO/EO/905) indicating that a signed oath/declaration of the inventors in compliance with 37 CFR 1.497(a) and (b) together with a surcharge payment were required. The notification set a two-month time limit in which to respond.

On 25 October 2004, the United States Designated/Elected Office (DO/EO/US) mailed a NOTIFICATION OF ABANDONMENT (Form PCT/DO/EO/909) indicating that the application was abandoned for failure to file a complete response to the Notification of Missing Requirements mailed 19 August 2003 within the time period set therein.

On 04 November 2004, applicants filed the present petition which was accompanied, among other things: a copy of the declaration(s) and power of attorney(s) filed 17 October 2003; an Express Mail Customer Receipt dated 17 October 2003; and an Express Mail Corporate Account Mailing Statement.

DISCUSSION

The above-identified application was abandoned on 19 October 2003 for failure to respond to the Notification of Missing Requirements mailed 19 August 2003. Applicants state in the present petition that an oath/declaration was mailed to the United States Patent and Trademark Office on 17 October 2003 pursuant to 37 CFR 1.10. A review of the application file reveals that the oath/declaration allegedly filed 17 October 2003 is not located therein.

37 CFR 1.10 (e) states:

> Any person mailing correspondence addressed as set out in § 1.1(a) to the Office with sufficient postage utilizing the "Express Mail Post Office to Addressee" service of the USPS, but not received by the Office, may petition the Commissioner to consider such correspondence filed in the Office on the USPS deposit date, provided that:
>
> (1) The petition is filed promptly after the person becomes aware that the Office has no evidence of receipt of the correspondence;
>
> (2) The number of the "Express Mail" mailing label was placed on the paper(s) or fee(s) that constitute the correspondence prior to the original mailing by "Express Mail;"
>
> (3) The petition includes a copy of the originally deposited paper(s) or fee(s) that constitute the correspondence showing the number of the "Express Mail" mailing label thereon, a copy of any returned postcard receipt, a copy of the "Express Mail" mailing label showing the "date-in," a copy of any other official notation by the USPS relied upon to show the date of deposit, and, if the requested filing date is a date other than the "date-in" on the "Express Mail" mailing label or other official notation entered by the USPS, a showing pursuant to paragraph (d)(3) of this section that the requested filing date was the date the correspondence was deposited in "Express Mail Post Office to Addressee" service prior to the last scheduled pickup for that day; and
>
> (4) The petition includes a statement which establishes, to the satisfaction of the Commissioner, the original deposit of the correspondence, and that the copies of the correspondence, the copy of the "Express Mail" mailing label, the copy of any returned postcard receipt, and any official notation entered by the USPS are true copies of the originally mailed correspondence and original "Express Mail" mailing label, returned postcard receipt, and official notation entered by the USPS.

Applicants have satisfied Items (1) through (4). The evidence of record is sufficient to establish with reasonable certainty that the oath/declaration was deposited with the United States Postal Service as an "Express Mail" Mailing on 17 October 2003. Applicants' petition

to withdraw the holding of abandonment is granted.

CONCLUSION

As construed above, applicants' petition to withdraw the holding of abandonment is **GRANTED**.

The application has an international filing date of 12 November 2001 under 35 U.S.C. 363, and a 35 U.S.C. 371(c)(1), (c)(2), and (c)(4) date of **17 October 2003**.

This application is being forwarded to the National Stage Processing Branch of the International Division for further processing.

Anthony Smith
Attorney-Advisor
Office of PCT Legal Administration
Telephone: (571) 272-3298
Facsimile: (571) 273-0459

UNITED STATES PATENT AND TRADEMARK OFFICE

Commissioner for Patents
United States Patent and Trademark Office
P.O. Box 1450
Alexandria, VA 22313-1450
www.uspto.gov

KNOBLE & YOSHIDA
EIGHT PENN CENTER
1628 JOHN F KENNEDY BOULEVARD
PHILADELPHIA PA 19103

MAILED
APR 22 2010
OFFICE OF PETITIONS

In re Application of :
Wilhelmus Joseph Leonardus Suyker, et al:
Application No. 10/416,433 : ON PETITION
Filed: August 25, 2003 :
Attorney Docket No. DVME-1029US :

This is a decision on the petition, filed January 28, 2010, under 37 CFR 1.182 requesting the withdrawal of previously filed terminal disclaimer. The petition fee has been received.

The petition is granted.

Petitioner asserts that the Terminal Disclaimer filed on July 6, 2007 in this application is moot in view of subsequent action in the prosecution of the application. Petitioner explains that the terminal disclaimer was necessary to overcome the obviousness type double patenting rejection of claims 1-9; however, the terminal disclaimer is no longer necessary upon cancellation of claims 1-9.

As the examiner has concurred, the request can be favorably considered.

The application is being referred to Technology Center Art Unit 3734 for further processing consistent with this decision.

Telephone inquiries related to this decision may be directed to the undersigned at (571) 272-3204. Inquiries relating to further prosecution should be directed to the Technology Center.

Sherry D. Brinkley
Petitions Examiner
Office of Petitions

15 SEP 2004

UNITED STATES PATENT AND TRADEMARK OFFICE

COMMISSIONER FOR PATENTS
UNITED STATES PATENT AND TRADEMARK OFFICE
ALEXANDRIA, VA 22313-1450
www.uspto.gov

Darby & Darby
PO Box 5257
New York, NY 10150-5257

In re Application of	:	
Peled et al.	:	
Application No.: 10/416,436	:	DECISION
PCT No.: PCT/IL01/01152	:	
Int. Filing Date: 12 December 2001	:	UNDER
Priority Date: 14 December 2000	:	
Attorney Docket No.: 6727/OM826USO	:	37 CFR 1.497(d)
For: Cavity Antenna With Reactive Surface Loading	:	

This is in response to the "Request To Correct Inventorship" filed on 13 January 2004.

BACKGROUND

This international application was filed on 12 December 2001, designated the United States, and claimed an earlier priority date of 14 December 2000. A Demand electing the United States was filed prior to the elapse of 19 months from the priority date. Consequently, the thirty month period for payment of the basic national fee in the United States expired as of midnight on 14 June 2003.

On 09 May 2003, applicants filed *inter alia* the basic national fee.

On 04 September 2003, a Notification of Missing Requirements (Form PCT/DO/EO/905) was mailed to counsel, requiring the submission of an executed oath or declaration and a surcharge under 37 CFR 1.492(e).

On 22 September 2003, applicants responded to the Notification of Missing Requirements.

On 03 November 2003, a Notification of Defective Response (Form PCT/DO/EO/916) was mailed to applicants, indicating that the response filed on 22 September 2003 was defective because "the inventor's names on the declaration does not match the inventor's names on the international application. (Peled, Asher and Boag, Amir).

DISCUSSION

The declaration of the inventors filed on 22 September 2003 and the declaration filed on 13 January 2004 both list inventors (Asher Peled and Amir Boag) whose names do not appear in the published international application. No Form PCT/IB/306 reflecting the recording of this change is present in the application file. Since the inventive entity named in the declaration differs from that named in the published international application, treatment under 37 CFR 1.497(d) is proper.

A declaration filed under 37 CFR 1.497 (d) must be by the actual inventor or inventors as required under 37 CFR 1.63 or as permitted by 37 CFR 1.42, 1.43 or 1.47. The declaration must be accompanied by (1) statement from each person being added as an inventor and from each person being deleted as an inventor that the error in inventorship occurred without deceptive intention on his or her part, (2) the processing fee set forth in 37 CFR 1.17; and (3) if an assignment has been executed by any of the original named inventors, the written consent of the assignee (*See* 37 CFR 3.73(b)). *See*

Section 201.03 of the Manual of Patent Examining Procedure (M.P.E.P.).

Regarding requirement (1), applicants have provided appropriate statements from Asher Peled and Amir Boag.

Regarding requirement (2), counsel has authorized that the required processing fee be charged to counsel's Deposit Account No. 04-0100.

Regarding requirement (3), counsel has provided a statement purporting to grant the assent of XELLANT, Inc. to the change in inventorship, but petitioner has neither furnished documents establishing a chain of ownership in the invention from the inventors to the purported assignee, nor identified where such documents have been recorded in the USPTO. Therefore, counsel has not furnished satisfactory written consent of any assignee per 37 CFR 3.73(b). In the absence of acceptable documentation of the assignee's consent, requirement (3) cannot be said to have been satisfied.

For the reasons explained above, it would not be appropriate to accept the papers under 37 CFR 1.497(d) on the basis of the present record.

CONCLUSION

The declaration is not accepted under 37 CFR 1.497 (d).

If reconsideration on the merits of this matter is desired, a proper response must be filed within **TWO (2) MONTHS** from the mail date of this decision. Any reconsideration request should include a cover letter entitled "Renewed Submission Under 37 CFR 1.497(d)". No additional processing fee is required.

Counsel's Deposit Account No. 04-0100 is being charged for the $130.00 processing fee, as authorized by the instant "Request."

Please direct any further correspondence with respect to this matter to the Assistant Commissioner for Patents, Mail Stop PCT, Alexandria, VA 22313-1450, and address the contents of the letter to the attention of the PCT Legal Office.

Richard Cole
PCT Legal Examiner
PCT Legal Office

George M. Dombroske
PCT Legal Examiner
PCT Legal Office
Tel: (703) 308-6721
Fax: (703) 308-6459

09 DEC 2004

UNITED STATES PATENT AND TRADEMARK OFFICE

COMMISSIONER FOR PATENTS
UNITED STATES PATENT AND TRADEMARK OFFICE
ALEXANDRIA, VA 22313-1450
P.O. Box 1450
www.uspto.gov

Darby & Darby
PO Box 5257
New York, NY 10150-5257

In re Application of	:	
Peled et al.	:	
Application No.: 10/416,436	:	DECISION
PCT No.: PCT/IL01/01152	:	
Int. Filing Date: 12 December 2001	:	UNDER
Priority Date: 14 December 2000	:	
Attorney Docket No.: 6727/OM826USO	:	37 CFR 1.497(d)
For: Cavity Antenna With Reactive Surface Loading	:	

This is in response to the "Renewed Submission Under 37 CFR § 1.497(d)" filed on 08 October 2004.

DISCUSSION

On 15 September 2004, a decision under 37 CFR 1.497(d) was mailed to counsel, treating a "Request To Correct Inventorship" filed on 13 January 2004. The decision indicated that the counsel, in attempting to add Asher Peled and Amir Boag as inventors, had not satisfied the requirements of 37 CFR 1.497(d) because

> counsel has provided a statement purporting to grant the assent of XELLANT, Inc. to the change in inventorship, but petitioner has neither furnished documents establishing a chain of ownership in the invention from the inventors to the purported assignee, nor identified where such documents have been recorded in the USPTO. Therefore, counsel has not furnished satisfactory written consent of any assignee per 37 CFR 3.73(b). In the absence of acceptable documentation of the assignee's consent, requirement (3) cannot be said to have been satisfied.

The instant renewed submission indicates the reel and frame numbers assigned to an assignment document from all of the inventors in favor of assignee Xellant, Inc. However, this submission is signed by counsel, rather than an individual having the authority to act on the behalf of the assignee. Counsel's attention is respectfully drawn to MPEP 324, which states in part that

The submission establishing ownership by the assignee must be signed by a party who is authorized to act on behalf of the assignee. See discussion below. Once 37 CFR 3.73(b) is complied with by an assignee, that assignee may continue to take action in that application, patent, or reexamination proceeding without filing a 37 CFR 3.73(b) submission each time, provided that ownership has not changed

Since the submission establishing ownership is not signed by such a party, it would not be appropriate to grant the requested relief at this time.

CONCLUSION

The request to accept the declaration under 37 CFR 1.497 (d) is **DISMISSED**, without prejudice.

If reconsideration on the merits of this matter is desired, a proper response must be filed within **TWO (2) MONTHS** from the mail date of this decision. Any reconsideration request should include a cover letter entitled "Renewed Submission Under 37 CFR 1.497(d)". No additional processing fee is required.

Please direct any further correspondence with respect to this matter to the Assistant Commissioner for Patents, Mail Stop PCT, Alexandria, VA 22313-1450, and address the contents of the letter to the attention of the PCT Legal Office.

Leonard Smith
PCT Legal Examiner
PCT Legal Office

George M. Dombroske
PCT Legal Examiner
PCT Legal Office
Tel: (703) 308-6721
Fax: (703) 308-6459

17 MAY 2005

UNITED STATES PATENT AND TRADEMARK OFFICE

#10

Commissioner for Patents
United States Patent and Trademark Office
P.O. Box 1450
ALEXANDRIA, VA 22313-1450
www.uspto.gov

Darby & Darby
PO Box 5257
New York, NY 10150-5257

In re Application of	:	
Peled et al.	:	
Application No.: 10/416,436	:	DECISION
PCT No.: PCT/IL01/01152	:	
Int. Filing Date: 12 December 2001	:	UNDER
Priority Date: 14 December 2000	:	
Attorney Docket No.: 6727/OM826USO	:	37 CFR 1.497(d)
For: Cavity Antenna With Reactive Surface Loading	:	

This is in response to the "Renewed Submission Under 37 CFR § 1.497(d)" filed on 09 February 2005.

DISCUSSION

On 09 December 2004, a decision under 37 CFR 1.497(d) was mailed to counsel, treating a "Request To Correct Inventorship" filed on 08 October 2004. The decision indicated that the counsel, in attempting to add Asher Peled and Amir Boag as inventors, had not satisfied the requirements of 37 CFR 1.497(d) because the statement under 37 CFR 3.73(b) was signed by counsel rather than by an individual having the authority to act on behalf of the assignee.

The instant renewed petition is accompanied by a "Statement Under 37 CFR 3.73(b)" signed by Raphael Kastner, whose title is listed as "XELLANT, Inc." and who asserts that "The undersigned (whose title is supplied below) is authorized to act on behalf of the assignee." In view of said "Statement Under 37 CFR 3.73(b)," counsel has satisfied all of the requirements for relief under 37 CFR 1.497(d).

CONCLUSION

The request to accept the declaration under 37 CFR 1.497(d) is **ACCEPTED**.

This application is being forwarded to the National Stage Processing Branch for further processing. The date of the application under 35 U.S.C. 371(c)(1), (c)(2) and (c)(4) is **22 September 2003**.

Daniel Stemmer
PCT Legal Examiner
PCT Legal Office

George M. Dombroske
PCT Legal Examiner
PCT Legal Office
Tel: (571) 272-3283
Fax: (571) 273-0459

UNITED STATES PATENT AND TRADEMARK OFFICE

Commissioner for Patents
United States Patent and Trademark Office
P.O. Box 1450
Alexandria, VA 22313-1450
www.uspto.gov

MAR 13 2009

COOPER & DUNHAM, LLP
30 Rockefeller Plaza
20th Floor
NEW YORK NY 10112

In re Application of:	:
Morell et al.	:
Serial No.: 10/416,439	: PETITION DECISION
Filed: December 5, 2003	:
Attorney Docket No.: **A20-048**	:

This is in response to the petition under 37 CFR § 1.181, filed February 6, 2009, requesting that the finality of the Office action of December 8, 2008 be withdrawn.

BACKGROUND

The examiner mailed a non-final Office action on March 31, 2008 setting a three month statutory limit for reply. At the time of this non-final Office action, claims 175-201 and 203-210 were pending and claims 202-209 were withdrawn from consideration. Specifically, claims 175-201 and 210 were provisionally rejected on the ground of nonstatutory obviousness-type double patenting; claims 175, 176, 181-185, 187-201 and 210 were rejected under 35 U.S.C. § 102(b) as being anticipated by McNaught et al.; and claims 177, 185 and 186 were rejected under 35 USC 103(a) as being unpatentable over McNaught et al in view of Katta et al. Finally, claims 175, 176, 181-185, 187-201 and 210 were rejected under 35 USC 103(a) as being unpatentable over McNaught et al in view of Li et al.

In reply to the non-final Office action of March 31, 2008, applicants filed a response on August 4, 2008. The response submitted by applicants included remarks, arguments traversing the rejections made in the non-final Office action, amendments to the claims and the cancellation of claim 175. Most importantly, claim 178 was rewritten in independent form as this claim was not rejected over the primary reference of McNaught et al.

On December 8, 2008, the examiner mailed a final Office action setting a three month statutory limit for reply. At the time of this final Office action, claims 176-201 and 203-210 were pending and claims 203-209 were withdrawn from consideration. Claims 176-201 and 210 were again

provisionally rejected on the ground of nonstatutory obviousness-type double patenting; claims 175, 176, 178, 181-185, 187-201 and 210 were rejected under 35 U.S.C. § 103(a) as being unpatentable over McNaught et al in view Li et al.

In response thereto, applicants filed this petition on February 6, 2009, requesting that the finality of the Office action of December 8, 2008 be withdrawn.

DISCUSSION

The petition and the file history have been carefully considered.

In the petition filed by applicants on February 6, 2009, applicants request reconsideration of the final Office action mailed by the examiner on December 8, 2008 asserting that the final rejection was premature. Specifically, applicants argue:

> "A Final Office Action was issued on December 8, 2008 in connection with the subject application by the U.S. Patent and Trademark Office. Although designated "final," the December 8, 2008 Final Office Action presents applicants with new grounds of rejection which were not presented in the March 31, 2008 Office Action.
>
> Specifically, page 4 of the December 8, 2008 Final Office Action sets forth a new ground of rejection for claim 178 which appeared for the first time. The Examiner stated on section 7 of the December 8, 2008 Final Office Action that "Claim 178 was unintentionally left off as part of the list of claims that were rejected by McNaught et al patent and in view of Li et al publication." Applicants note that the March 31, 2008 Office Action does not list claim 178 as a rejected claim, nor was any discussion of claim 178 included within the 35 U.S.C. 103 (a) rejection of the March 31, 2008 Office Action. There was no indication in the March 31, 2008 Office Action that claim 178 was rejected on any ground. Applicants understood claim 178 to be allowed, and rewrote it as an independent claim in an effort to advance prosecution of the subject application".

Applicants also argue that "Although designated "final," the December 8, 2008 Final Office Action presents applicants with a new ground of rejection which was not presented in the March 31, 2008 office Action, was not necessitated by applicants' amendment of the claims, nor based on information submitted under 37 C.F.R. § 1.97(c), and which could therefore not previously be addressed by applicants. With the addition of this newly rejected claim, the ground of rejection is no longer the same as the ground of rejection previously set forth, but rather a new ground of rejection."

The examiner's rejection of claim 178 for the first time over McNaught et al in view Li et al in the final Office action was a new rejection considering that the examiner did not originally institute said rejection in the non-final Office action of March 31, 2008. While new rejections are permitted in final Office actions, such new rejections are only proper under certain circumstances according to the provisions set forth in the MPEP; those provisions being, either when applicants' amendment to the claims necessitates such a rejection or when an IDS submitted by applicants necessitates such a rejection, see MPEP 706.07 (a). It is further pointed out that evening assuming claim 178 was "inadvertently" omitted from the earlier rejection, it is not seen that applicants should be penalized for making a good faith effort to advance prosecution by rewriting claim 178 in independent form.

Applicants' arguments are well-taken and found persuasive. The new ground of rejection of 178, presented by the examiner in the final Office action of December 8, 2008 was not necessitated by applicants' amendments to the claims on August 4, 2008 nor was the rejection necessitated by the filing of an IDS. In view of the evidence, the final Office action issued December 8, 2008 is found premature and thus in error. Consequently, the finality of the Office action will be withdrawn in favor of applicants.

DECISION

The petition is **GRANTED.**

This application will be forwarded to the examiner for an action not inconsistent with this decision.

Should there be any questions about this decision please contact Marianne C. Seidel, by letter addressed to Director, TC 1600, at the address listed above, or by telephone at 571-272-0584 or by facsimile sent to the general Office facsimile number, 703-872-9306.

Remy Yucel
Director, Technology Center 1600

UNITED STATES PATENT AND TRADEMARK OFFICE

Commissioner for Patents
United States Patent and Trademark Office
P.O. Box 1450
Alexandria, VA 22313-1450
www.uspto.gov

MAR 13 2009

COOPER & DUNHAM, LLP
30 Rockefeller Plaza
20th Floor
NEW YORK NY 10112

In re Application of:	:
Morell et al.	:
Serial No.: 10/416,439	: PETITION DECISION
Filed: December 5, 2003	:
Attorney Docket No.: **A20-048**	:

This is in response to the petition under 37 CFR § 1.181, filed February 6, 2009, requesting that the finality of the Office action of December 8, 2008 be withdrawn.

BACKGROUND

The examiner mailed a non-final Office action on March 31, 2008 setting a three month statutory limit for reply. At the time of this non-final Office action, claims 175-201 and 203-210 were pending and claims 202-209 were withdrawn from consideration. Specifically, claims 175-201 and 210 were provisionally rejected on the ground of nonstatutory obviousness-type double patenting; claims 175, 176, 181-185, 187-201 and 210 were rejected under 35 U.S.C. § 102(b) as being anticipated by McNaught et al.; and claims 177, 185 and 186 were rejected under 35 USC 103(a) as being unpatentable over McNaught et al in view of Katta et al. Finally, claims 175, 176, 181-185, 187-201 and 210 were rejected under 35 USC 103(a) as being unpatentable over McNaught et al in view of Li et al.

In reply to the non-final Office action of March 31, 2008, applicants filed a response on August 4, 2008. The response submitted by applicants included remarks, arguments traversing the rejections made in the non-final Office action, amendments to the claims and the cancellation of claim 175. Most importantly, claim 178 was rewritten in independent form as this claim was not rejected over the primary reference of McNaught et al.

On December 8, 2008, the examiner mailed a final Office action setting a three month statutory limit for reply. At the time of this final Office action, claims 176-201 and 203-210 were pending and claims 203-209 were withdrawn from consideration. Claims 176-201 and 210 were again

provisionally rejected on the ground of nonstatutory obviousness-type double patenting; claims 175, 176, 178, 181-185, 187-201 and 210 were rejected under 35 U.S.C. § 103(a) as being unpatentable over McNaught et al in view Li et al.

In response thereto, applicants filed this petition on February 6, 2009, requesting that the finality of the Office action of December 8, 2008 be withdrawn.

DISCUSSION

The petition and the file history have been carefully considered.

In the petition filed by applicants on February 6, 2009, applicants request reconsideration of the final Office action mailed by the examiner on December 8, 2008 asserting that the final rejection was premature. Specifically, applicants argue:

> "A Final Office Action was issued on December 8, 2008 in connection with the subject application by the U.S. Patent and Trademark Office. Although designated "final," the December 8, 2008 Final Office Action presents applicants with new grounds of rejection which were not presented in the March 31, 2008 Office Action.
>
> Specifically, page 4 of the December 8, 2008 Final Office Action sets forth a new ground of rejection for claim 178 which appeared for the first time. The Examiner stated on section 7 of the December 8, 2008 Final Office Action that "Claim 178 was unintentionally left off as part of the list of claims that were rejected by McNaught et al patent and in view of Li et al publication." Applicants note that the March 31, 2008 Office Action does not list claim 178 as a rejected claim, nor was any discussion of claim 178 included within the 35 U.S.C. 103 (a) rejection of the March 31, 2008 Office Action. There was no indication in the March 31, 2008 Office Action that claim 178 was rejected on any ground. Applicants understood claim 178 to be allowed, and rewrote it as an independent claim in an effort to advance prosecution of the subject application".

Applicants also argue that "Although designated "final," the December 8, 2008 Final Office Action presents applicants with a new ground of rejection which was not presented in the March 31, 2008 office Action, was not necessitated by applicants' amendment of the claims, nor based on information submitted under 37 C.F.R. § 1.97(c), and which could therefore not previously be addressed by applicants. With the addition of this newly rejected claim, the ground of rejection is no longer the same as the ground of rejection previously set forth, but rather a new ground of rejection."

The examiner's rejection of claim 178 for the first time over McNaught et al in view Li et al in the final Office action was a new rejection considering that the examiner did not originally institute said rejection in the non-final Office action of March 31, 2008. While new rejections are permitted in final Office actions, such new rejections are only proper under certain circumstances according to the provisions set forth in the MPEP; those provisions being, either when applicants' amendment to the claims necessitates such a rejection or when an IDS submitted by applicants necessitates such a rejection, see MPEP 706.07 (a). It is further pointed out that even assuming claim 178 was "inadvertently" omitted from the earlier rejection, it is not seen that applicants should be penalized for making a good faith effort to advance prosecution by rewriting claim 178 in independent form.

Applicants' arguments are well-taken and found persuasive. The new ground of rejection of 178, presented by the examiner in the final Office action of December 8, 2008 was not necessitated by applicants' amendments to the claims on August 4, 2008 nor was the rejection necessitated by the filing of an IDS. In view of the evidence, the final Office action issued December 8, 2008 is found premature and thus in error. Consequently, the finality of the Office action will be withdrawn in favor of applicants.

DECISION

The petition is **GRANTED.**

This application will be forwarded to the examiner for an action not inconsistent with this decision.

Should there be any questions about this decision please contact Marianne C. Seidel, by letter addressed to Director, TC 1600, at the address listed above, or by telephone at 571-272-0584 or by facsimile sent to the general Office facsimile number, 703-872-9306.

John Le Guyader
for
Remy Yucel
Director, Technology Center 1600

12 DEC 2003

UNITED STATES PATENT AND TRADEMARK OFFICE

COMMISSIONER FOR PATENTS
UNITED STATES PATENT AND TRADEMARK OFFICE
P.O. BOX 1450
ALEXANDRIA, VA 22313-1450
www.uspto.gov

Michael Molins
Molins & Co.
Level 25 Chifley Tower
Sydney Australia 2000

In re Application of	:	
HUANG, DING	:	
Application No.: 10/416,459	:	DECISION ON PETITION
PCT No.: PCT/AU01/01539	:	UNDER 37 CFR 1.137(b)
Int. Filing Date: 27 November 2001	:	
Priority Date: 27 November 2000	:	
Attorney Docket No.: None	:	
For: A POWER GENERATION ASSEMBLY	:	

The petition to revive under 37 CFR 1.137(b) filed 06 October 2003 in the above-captioned application is hereby **GRANTED** as follows:

Applicant's statement that "it was never the intent of this attorney or his client (the applicant) to abandon this case" and title of this petition have been construed as meaning that "entire delay in filing the required reply from the due date for the reply until the filing of this petition under 37 CFR 1.137(b) was unintentional." If this is an incorrect interpretation in view of the rules, Petitioner must immediately notify the Office of PCT Legal Administration of such error.

A review of the application file reveals that applicant has submitted the basic national fee of $530 and the requirements of 37 CFR 1.137(b) have been satisfied. Therefore, the request to revive the application abandoned under 35 U.S.C. 371(d) is granted as to the National stage in the United States of America.

This application is being returned to the United States Designated/Elected Office for processing in accordance with this decision.

Anthony Smith
Attorney-Advisor
Office of PCT Legal Administration
Telephone: (703) 308-6314
Facsimile: (703) 308-6459

UNITED STATES PATENT AND TRADEMARK OFFICE

Commissioner for Patents
United States Patent and Trademark Office
P.O. Box 1450
Alexandria, VA 22313-1450
www.uspto.gov

GREENBLUM
& BERNSTEIN, P.L.C.
1950 ROLAND CLARKE PLACE
RESTON VA 20191

COPY MAILED

DEC 08 2009

OFFICE OF PETITIONS

In re Application of
Nowinski, et al.
Application No. 10/416,520
Filed: 19 August, 2003
Attorney Docket No. P23422

DECISION ON PETITION

This is a decision on the petition filed on 4 September, 2009, requesting correction of the name of the inventor/applicant, and considered for relief under 37 C.F.R §1.182.

The petition under 37 C.F.R §1.182 is **DISMISSED**.

A request for reconsideration of this decision must be submitted within TWO (2) MONTHS from the mail date of this decision. Extensions of time under 37 C.F.R. §1.136(a) are permitted. The reconsideration request should include a cover letter entitled "Renewed Petition under 37 C.F.R. §1.182."

This is **not** a final agency action within the meaning of 5 U.S.C. §704.

It is noted that Petitioner did not include with the petition and fee the required declaration by the inventor/applicant, signed in both forms of the inventor/applicant's name—that averred to have been incorrect and that averred to be correct.

The guidance in the Commentary set forth at MPEP§605.04(c) suggests to Petitioner the proper procedure herein:

> **605.04(c)Inventor Changes Name [R-5]**
>
> In cases where an inventor's name has been changed after the application has been filed and the inventor desires to change his or her name on the application, he or she must submit a petition under 37 CFR 1.182. Applicants are also strongly encouraged to submit an application data sheet (37 CFR 1.76) showing the new name. The petition should be

directed to the attention of the Office of Petitions. The petition must include an appropriate petition fee and **>a statement< signed by the inventor setting forth both names and the procedure whereby the change of name was effected, or a * copy of the court order.

Since amendments are not permitted after the payment of the issue fee (37 CFR 1.312), a petition under 37 CFR 1.182 to change the name of the inventor cannot be granted if filed after the payment of the issue fee.

If an application data sheet is not submitted, the petition may still be granted, but the patent may not reflect the correct spelling of the inventor's name.

If the petition is granted, if the application is maintained in paper with a file jacket label (i.e., the application is an 08/ or earlier series application), the original declaration must be marked in red ink, in the left margin "See paper No. _ for correction of inventor name" and the application should be sent to the Office of Initial Patent Examination (OIPE) for change of name on the file wrapper and in the PALM database. If the petition is granted in an Image File Wrapper (IFW) application or if the application is an 09/ or later series application, the spelling of the inventor's name should be changed in the Office computer records and a new PALM bib-data sheet should be printed. If the application is assigned, applicant should submit a corrected assignment document along with a cover sheet and the recording fee as set forth in 37 CFR 1.21(h) to the Assignment Division for a change in the assignment record.

BACKGROUND

A search of the file indicates that:

The instant application was filed, Petitioner indicates, with an incorrect form as to an inventor's name—the name having been typed and signed in that form.

On 4 September, 2009, Petitioner indicated to the Office that the name of inventor/applicant should be corrected to overcome the incorrect form of the name of one of the inventors.

(At that time Petitioner submitted no executed oath/declaration in that form and no updated application data sheet (ADS), the latter of which may not be required but should be included.

Moreover, Petitioner did not include with the petition and fee the required declaration by the inventor/applicant, signed in both forms of the inventor/applicant's name—that averred to have been incorrect and that averred to be correct.)

The availability of applications and application papers online to applicants/practitioners who diligently associate their Customer Number with the respective application(s) now provides an applicant/practitioner on-demand information as to events/transactions in an application. Thus, now if one wishes to know the progress in and/or status of an application or the accuracy of the data therein, one need only look at the file online.

Out of an abundance of caution, Petitioners always are reminded that those registered to practice *and* all others who make representations before the Office must inquire into the underlying facts of representations made to the Office and support averments with the appropriate documentation–since all owe to the Office the continuing duty to disclose.[1]

CONCLUSION

Accordingly, the petition under 37 C.F.R. §1.137(b) is **dismissed**.

Further correspondence with respect to this matter should be addressed as follows:

By Mail: Mail Stop PETITION
Commissioner for Patents
P. O. Box 1450
Alexandria, VA 22313-1450

By hand: U. S. Patent and Trademark Office
Customer Service Window, Mail Stop Petitions
Randolph Building
401 Dulany Street
Alexandria, VA 22314

By facsimile: **(571) 273-8300**
Attn: Office of Petitions

[1] See supplement of 17 June, 1999. The Patent and Trademark Office is relying on petitioner's duty of candor and good faith and accepting a statement made by Petitioner. See Changes to Patent Practice and Procedure, 62 Fed. Reg. at 53160 and 53178, 1203 Off. Gaz. Pat. Office at 88 and 103 (responses to comments 64 and 109)(applicant obligated under 37 C.F.R. §10.18 to inquire into the underlying facts and circumstances when providing statements to the Patent and Trademark Office). See specifically, the regulations at 37 C.F.R. §10.18.

Telephone inquiries regarding this decision may be directed to the undersigned at (571) 272-3214—it is noted, however, that all practice before the Office is in writing (see: 37 C.F.R. §1.2[2]) and the proper authority for action on any matter in this regard are the statutes (35 U.S.C.), regulations (37 C.F.R.) and the commentary on policy (MPEP). Therefore, no telephone discussion may be controlling or considered authority for Petitioner's action(s).

/John J. Gillon, Jr./
John J. Gillon, Jr.
Senior Attorney
Office of Petitions

[2] The regulations at 37 C.F.R. §1.2 provide:
§1.2 Business to be transacted in writing.
All business with the Patent and Trademark Office should be transacted in writing. The personal attendance of Petitioners or their attorneys or agents at the Patent and Trademark Office is unnecessary. The action of the Patent and Trademark Office will be based exclusively on the written record in the Office. No attention will be paid to any alleged oral promise, stipulation, or understanding in relation to which there is disagreement or doubt.

20 OCT 2003

#4

UNITED STATES PATENT AND TRADEMARK OFFICE

COMMISSIONER FOR PATENTS
UNITED STATES PATENT AND TRADEMARK OFFICE
P.O. BOX 1450
ALEXANDRIA, VA 22313-1450
www.uspto.gov

ARMSTRONG, WESTERMAN & HATTORI, LLP
1725 K STREET, NW
SUITE 1000
WASHINGTON, DC 20006

In re Application of HORI et al. Application No.: 10/416,523 PCT No.: PCT/JP01/10258 Int. Filing Date: 22 November 2001 Priority Date: 24 November 2000 Attorney Docket No.: 030567 For: DATA TERMINAL CAPABLE OF TRANSFERING CIPHERED CONTENT DATA AND LICENSE ACQUIRED BY SOFTWARE	DECISION ON SUBMISSION

This application is before the PCT Legal Office for consideration of matters arising under 35 U.S.C. 371.

BACKGROUND

On 23 May 2003, applicants filed a transmittal letter concerning a filing under 35 U.S.C. 371 accompanied by the basic national fee.

On 02 September 2003, a Notification of Missing Requirements was mailed to applicants indicating that an oath or declaration in compliance with 37 CFR 1.497(a) & (b) was required.

On 16 September 2003, applicants filed a Response to the Notification of Missing Requirements accompanied by five declarations. The declarations were executed by seven of the eight named inventors identified in the published international application. The declarations did not identify the seventh inventor named on the publication, *Ryuji Tunehiro*, but identified a *Takashi Tsunehiro*.

DISCUSSION

A review of the application file reveals that the given name of the applicant is listed in the international application as "Ryuji Tunehiro" while the given name is listed in the declaration as "Takashi Tsunehiro". No explanation is offered as to how the error in the seventh named inventor's name occurred, e.g. is this a correction of a transliteration or typographical error or has the inventor's name been legally changed, etc. The declaration as filed is not in compliance with 37 CFR 1.66 or 1.68 as it identifies a legal entity not identified on the international application and is unacceptable as filed.

As indicated in Section 201.03 of the Manual of Patent Examining Procedure, where a typographical or transliteration error in the spelling of an inventor's name is discovered, a petition under 37 CFR 1.48(a) is not required. However, the Office should be notified of the error accompanied by a petition under 37 CFR 1.182 to correct the name of the inventor. In the instant

application, if appropriate, applicant should submit a petition under 37 CFR 1.182 and provide an explanation as to why the seventh named inventor did not note a correction of his first name in the published international application.

CONCLUSION

The declarations of inventors submitted by applicants on 16 September 2003 cannot be accepted as a proper response to the Notification of Missing Requirements at this time.

Applicants are required to submit a petition under 37 CFR 1.182 to correct the first name of inventor Tsunehiro along with an explanation of the correction within **TWO (2) MONTHS** from the mail date of this decision.

Any further correspondence with respect to this matter should be addressed to the Mail Stop PCT, Commissioner for Patents, Office of PCT Legal Administration, P.O. Box 1450, Alexandria, Virginia 22313-1450, with the contents of the letter marked to the attention of the Office of PCT Legal Administration.

Cynthia M. Kratz
Attorney Advisor
PCT Legal Office

Telephone: (703) 306-5467
Facsimile: (703) 308-6459

2 3 DEC 2003

#6

UNITED STATES PATENT AND TRADEMARK OFFICE

COMMISSIONER FOR PATENTS
UNITED STATES PATENT AND TRADEMARK OFFICE
P.O. BOX 1450
ALEXANDRIA, VA 22313-1450
www.uspto.gov

ARMSTRONG, WESTERMAN & HATTORI, LLP
1250 CONNECTICUT AVENUE, NW
SUITE 700
WASHINGTON, DC 20036

In re Application of HORI et al. Application No.: 10/416,523 PCT No.: PCT/JP01/10258 Int. Filing Date: 22 November 2001 Priority Date: 24 November 2000 Attorney Docket No.: 030567 For: DATA TERMINAL CAPABLE OF TRANSFERING CIPHERED CONTENT DATA AND LICENSE ACQUIRED BY SOFTWARE	DECISION ON SUBMISSION

This is a decision on applicant's "PETITION UNDER 37 CFR 1.182" filed in the United States Patent and Trademark Office (USPTO) 19 December 2003.

On 16 September 2003, applicants filed a Response to the 02 September 2003 Notification of Missing Requirements accompanied by five declarations. The declarations were executed by seven of the eight named inventors identified in the published international application. The declarations did not identify the seventh inventor named on the publication, *Ryuji Tunehiro*, but identified a *Takashi Tsunehiro*. In a decision mailed on 20 October 2003, applicants were advised to file a petition under 37 CFR 1.182 to correct the inventor's name and explain the discrepancy.

On 19 December 2003, applicant's filed the instant petition under 37 CFR 1.182.

A review of the application file reveals that the given name of the applicant is listed in the international application as "Ryuji Tunehiro" while the given name is listed in the declaration as "Takashi Tsunehiro". Applicant explains that the seventh named inventor's name occurred due to a transliteration.

Applicants' a petition under 37 CFR 1.182 to correct the first name of inventor Tsunehiro is **GRANTED**.

The declarations submitted on 16 September 2003 are acceptable and meets the requirements of 37 CFR 1.497(a) and (b). The application will be forwarded to the United States Designated/Elected Office for further processing in accordance with this decision.

Cynthia M. Kratz

Cynthia M. Kratz
Attorney Advisor
PCT Legal Office

Telephone: (703) 306-5467
Facsimile: (703) 308-6459

UNITED STATES PATENT AND TRADEMARK OFFICE

Commissioner for Patents
United States Patent and Trademark Office
P.O. Box 1450
Alexandria, VA 22313-1450
www.uspto.gov

Schwegman, Lundberg & Woessner, P.A.
1600 TCF Tower
121 South 8th Street
Minneapolis, MN 55402

COPY MAILED

FEB 04 2008

OFFICE OF PETITIONS

In re Application of	:	
Dor Givon	:	
Application No. 10/416,533	:	DECISION ON PETITION
Filed: May 27, 2003	:	TO WITHDRAW
Attorney Docket No. 1774.005US1	:	FROM RECORD
	:	

This is a decision on the Request to Withdraw as attorney or agent of record under 37 C.F.R. § 1.36(b), filed September 11, 2007.

The request is **NOT APPROVED** as moot.

A review of the file record indicates that the power of attorney to Schwegman, Lundberg & Woessner, P.A. has been revoked by the assignee of the patent application on September 11, 2007. Accordingly, the request to withdraw under 37 C.F.R. § 1.36(b) is moot.

All future communications from the Office will continue to be directed to the below-listed address until otherwise notified by applicant.

Telephone inquires concerning this decision should be directed to Terri Williams at 571-272-2991.

T. Williams
Terri Williams
Petitions Examiner
Office of Petitions

cc: **Lemaire Patent Law Firm, P.L.L.C.**
PO Box 11358
St. Paul, MN 55111

3 0 NOV 2004

#13

UNITED STATES PATENT AND TRADEMARK OFFICE

COMMISSIONER FOR PATENTS
UNITED STATES PATENT AND TRADEMARK OFFICE
P.O. BOX 1450
ALEXANDRIA, VA 22313-1450
www.uspto.gov

WESTERMAN, HATTORI, DANIELS & ADRIAN, LLP
1250 CONNECTICUT AVENUE, NW
SUITE 700
WASHINGTON, DC 20036

In re Application of HORI et al	:	
U.S. Application No.: 10/416,538	:	
PCT Application No.: PCT/JP01/10344	:	
Int. Filing Date: 27 November 2001	:	DECISION
Priority Date Claimed: 28 November 2000	:	
Attorney Docket No.: 030597	:	
For: DATA TERMINAL FOR MANAGING	:	
CIPHERED CONTENT DATA AND	:	
LICENSE ACQUIRED BY SOFTWARE	:	

This is in response to applicant's "Petition Under 37 CFR §1.182" filed 19 November 2004.

BACKGROUND

On 27 November 2001, applicant filed international application PCT/JP01/10344, which claimed priority of an earlier Japan application filed 28 November 2000. A copy of the international application was communicated to the USPTO from the International Bureau on 06 June 2002.. The thirty-month period for paying the basic national fee in the United States expired on 28 May 2003.

On 28 May 2003, applicant filed national stage papers in the United States Designated/Elected Office (DO/EO/US). The submission was accompanied by, *inter alia*, the basic national fee required by 35 U.S.C. 371(c)(1).

On 16 September 2003, the DO/EO/US mailed a Notification of Missing Requirements Under 35 U.S.C. 371 (Form PCT/DO/EO/905), which indicated that an oath or declaration in compliance with 37 CFR 1.497 must be filed.

On 09 October 2003, applicant filed executed declarations.

On 10 December 2003, the DO/EO/US mailed a Notification of Defective Response (Form PCT/DO/EO/916), which indicated a discrepancy in one of the inventor's names.

On 30 January 2004, applicant filed the present petition under 37 CFR 1.182.

DISCUSSION

The name of the sixth inventor is listed as "Takashi Tsunehiro" in the declaration but is listed as "Ryuji Tunehiro" in the published international application. Applicant has filed a petition under 37 CFR 1.182 along with the requisite petition fee. However, the petition is not accompanied by statements from the inventor and from the individual having firsthand knowledge of the error. These statements must set forth the specific circumstances as to how and when the error was made and discovered and also set forth that the mistake was an inadvertent error without deceptive intent.

CONCLUSION

For the reasons above, the petition under 37 CFR 1.182 is DISMISSED without prejudice.

If reconsideration on the merits of the petition is desired, a proper response must be filed within TWO (2) MONTHS from the mail date of this decision. Extensions of time are available under 37 CFR 1.136(a). Any reconsideration request should include a cover letter entitled "Renewed Petition Under 37 CFR 1.182". No additional petition fee is required.

Please direct further correspondence with respect to this matter to Mail Stop PCT, Commissioner for Patents, Office of PCT Legal Administration, P.O. Box 1450, Alexandria, Virginia 22313-1450, with the contents of the letter marked to the attention of the Office of PCT Legal Administration.

Bryan Tung
PCT Legal Examiner
PCT Legal Office

Telephone: 571-272-3303
Facsimile: 571-273-0459

07 JAN 2005

UNITED STATES PATENT AND TRADEMARK OFFICE

COMMISSIONER FOR PATENTS
UNITED STATES PATENT AND TRADEMARK OFFICE
P.O. BOX 1450
ALEXANDRIA, VA 22313-1450
www.uspto.gov

WESTERMAN, HATTORI, DANIELS & ADRIAN, LLP
1250 CONNECTICUT AVENUE, NW
SUITE 700
WASHINGTON, DC 20036

In re Application of HORI et al	:	
U.S. Application No.: 10/416,538	:	
PCT Application No.: PCT/JP01/10344	:	
Int. Filing Date: 27 November 2001	:	DECISION
Priority Date Claimed: 28 November 2000	:	
Attorney Docket No.: 030597	:	
For: DATA TERMINAL FOR MANAGING	:	
CIPHERED CONTENT DATA AND	:	
LICENSE ACQUIRED BY SOFTWARE	:	

This is in response to applicant's "Renewed Petition Under 37 CFR §1.182" filed 10 December 2004.

BACKGROUND

On 27 November 2001, applicant filed international application PCT/JP01/10344, which claimed priority of an earlier Japan application filed 28 November 2000. A copy of the international application was communicated to the USPTO from the International Bureau on 06 June 2002. The thirty-month period for paying the basic national fee in the United States expired on 28 May 2003.

On 28 May 2003, applicant filed national stage papers in the United States Designated/Elected Office (DO/EO/US). The submission was accompanied by, *inter alia*, the basic national fee required by 35 U.S.C. 371(c)(1).

On 16 September 2003, the DO/EO/US mailed a Notification of Missing Requirements Under 35 U.S.C. 371 (Form PCT/DO/EO/905), which indicated that an oath or declaration in compliance with 37 CFR 1.497 must be filed.

On 09 October 2003, applicant filed executed declarations.

On 10 December 2003, the DO/EO/US mailed a Notification of Defective Response (Form PCT/DO/EO/916), which indicated a discrepancy in one of the inventor's names.

On 30 January 2004, applicant filed a petition under 37 CFR 1.182.

On 30 November 2004, this Office mailed a decision dismissing the 30 January 2004 petition.

On 10 December 2004, applicant filed the present renewed petition under 37 CFR 1.182.

DISCUSSION

The name of the sixth inventor is listed as "Takashi Tsunehiro" in the declaration but is listed as "Ryuji Tunehiro" in the published international application. Applicant has filed a petition under 37 CFR 1.182 along with the requisite petition fee. Applicant's explanation that the discrepancy was caused by a transliteration error is accepted.

CONCLUSION

For the reasons above, the renewed petition under 37 CFR 1.182 is GRANTED.

The application has an International Filing Date under 35 U.S.C. 363 of 27 November 2001, and a date under 35 U.S.C. 371(c)(1), (c)(2), and (c)(4) of 09 October 2003.

The application is being forwarded to the DO/EO/US for processing in accordance with this decision.

Bryan Tung
PCT Legal Examiner
PCT Legal Office

Telephone: 571-272-3303
Facsimile: 571-273-0459

Pet Dec.

1744

OIPE
DEC 3 1 2003
PATENT & TRADEMARK

P23766.W0

IN THE UNITED STATES PATENT AND TRADEMARK OFFICE

Applicant : Jung-O AN

Group Art Unit: Not Yet Assigned

Appln. No. : 10/416,539
(National Stage of PCT/KR01/01961)

Examiner: Not Yet Assigned

Filed : May 28, 2003
(International Filing Date November 16, 2001)

For : HUMIDIFYING METHOD AND APPARATUS USING SILVER IONIZED WATER

RECEIVED
JAN 16 2004
TC 1700

WITHDRAWAL AS ATTORNEYS OF RECORD

Commissioner for Patents
PO Box 1450
Alexandria, VA 22313-1450

Approved
JMStone
Jacqueline M. Stone, Director
Technology Center 1700
JUN 29 2004

Sir:

The undersigned Counsel hereby requests withdrawal of representation in connection with the above-captioned application for each of the attorneys of record of the firm of:

GREENBLUM & BERNSTEIN, P.L.C
1950 Roland Clarke Place
Reston, VA. 20191

The reason for withdrawal is that the inventor/client (Jung-O AN/Koco Silver Co., Ltd.) has not paid for previous prosecution of this matter. In the absence of instructions to the contrary, we assume that all future correspondence and communications from the United States Patent and Trademark Office should be directed to the inventor/client (Jung-O AN/Koco Silver Co., Ltd.) of record at the following address.

P23766.W01

Koco Silver Co., Ltd.
105, Sinseong B/D, #283, 6-ga
Dangsan-dong, Yeongdeungpo-gu
Seoul, 150-046
Republic of Korea

The undersigned notes that inventor/ client is being concurrently advised by letter that a Withdrawal of Power of Attorney is being filed.

Accordingly, the undersigned respectfully requests that this Withdrawal as Attorneys of Record be granted. Should there be any questions, the United States Patent and Trademark Office is invited to contact the undersigned.

The signature of the undersigned is made on behalf of himself, as well as all registered practitioners listed in the Declaration and Power of Attorney of May 21, 2003, who are presently empowered to act for the Applicant in the present application.

Respectfully submitted,
Jung-O AN

Bruce H. Bernstein
Reg. No. 29,027

December 30, 2003
GREENBLUM & BERNSTEIN, P.L.C.
1950 Roland Clarke Place
Reston, VA 20191
(703) 716-1191

UNITED STATES PATENT AND TRADEMARK OFFICE

Commissioner for Patents
United States Patent and Trademark Office
P.O. Box 1450
Alexandria, VA 22313-1450
www.uspto.gov

FEB 10 2005

STERNE, KESSLER, GOLDSTEIN & FOX PLLC
1100 NEW YORK AVENUE, N.W.
WASHINGTON DC 20005

In re Application of	:
Michael Farber et al	:
Serial No.: 10/416,547	: PETITION TO MAKE SPECIAL
Filed: June 13, 2003	:
Attorney Docket No.: 1556.0360000	:

This is in response to applicants' petition filed January 12, 2005, to make the above-identified application special under the provisions of 37 CFR 1.102(d).

Applicant has satisfied the provisions set forth in M.P.E.P. 708.02, VIII. Therefor the petition is **GRANTED**.

The following condition applies to the grant of this petition: If, upon examination, it is determined that a restriction requirement is necessary because of multiple inventions being claimed, applicant will be required to make an election without traverse of a single invention to be prosecuted. Failure to make an election without traverse will void the special status accorded in this decision.

The application will be forwarded the examiner for action on the merits commensurate with this decision.

Should there be any questions with regard to this letter please contact William R. Dixon, Jr. by letter addressed to the Director, Technology Center 1600, P.O. Box 1450, Alexandria, VA 22313-1450, or by telephone at 571-272-0519 or by facsimile transmission at the general Office facsimile number, 571-273-8300.

William R. Dixon, Jr.
Special Program Examiner
Technology Center 1600

UNITED STATES PATENT AND TRADEMARK OFFICE

Commissioner for Patents
United States Patent and Trademark Office
P.O. Box 1450
Alexandria, VA 22313-1450
www.uspto.gov

COPY MAILED

MAY 23 2007

OFFICE OF PETITIONS

PILLSBURY WINTHROP SHAW PITTMAN, LLP
P.O. BOX 10500
MCLEAN, VA 22102

In re Patent No. 6,926,350	:	
Issue Date: August 9, 2005	:	
Application No. 10/416,549	:	ON PETITION
Filed: October 17, 2003	:	
Attorney Docket No. P 303631	:	

This is a decision on the petition filed December 5, 2006, which is being treated as a petition under 37 CFR 3.81(b)[1] to correct assignee's name on the front page of the above-identified patent by way of a Certificate of Correction.

The petition is **granted.**

Telephone inquiries concerning this matter may be directed to the undersigned at (571) 272-3210. Any questions concerning the issuance of the Certificate of Correction should be directed to the Certificates of Correction Branch at (703) 305-8309.

This application is being forwarded to the Certificates of Correction Branch for issuance of the requested Certificate of Correction.

Irvin Dingle
Petitions Examiner
Office of Petitions

[1] See Official Gazette of June 22, 2004

UNITED STATES PATENT AND TRADEMARK OFFICE

Commissioner for Patents
United States Patent and Trademark Office
P.O. Box 1450
Alexandria, VA 22313-1450
www.uspto.gov

CAESAR, RIVISE, BERNSTEIN,
COHEN & POKOTILOW, LTD.
11TH FLOOR, SEVEN PENN CENTER
1635 MARKET STREET
PHILADELPHIA, PA 19103-2212

COPY MAILED

APR 24 2007

OFFICE OF PETITIONS

In re Application of	:	
Daniel Jonathan Shaw et al	:	
Application No. 10/416,559	:	DECISION GRANTING PETITION
Filed: May 12, 2003	:	UNDER 37 CFR 1.137(b)
Attorney Docket No. S1011/20156	:	

This is a decision on the petition under 37 CFR 1.137(b), filed September 20,2 006, to revive the above-identified application.

The petition is **GRANTED**.

The above-identified application became abandoned for failure to reply within the meaning of 37 CFR 1.113 in a timely manner to the final Office action mailed December 30, 2005, which set a shortened statutory period for reply of three (3) months. No extensions of time under the provisions of 37 CFR 1.136(a) were obtained. Accordingly, the above-identified application became abandoned on March 31, 2006. A Notice of Abandonment was mailed on August 11, 2006.

The petition satisfies the conditions for revival pursuant to the provisions of 37 CFR 1.137(b) in that (1) the reply (request for continued examination (RCE), $395 fee therefor, and submission as required by 37 CFR 1.114), (2) the $750 petition fee, and (3) the required statement of unintentional delay have been received. Accordingly, the reply to the final Office action of December 30, 2005 is accepted as having been unintentionally delayed.

The rule at 37 CFR 1.137(b)(3) requires a statement that "the entire delay in filing the required reply from the due date for the reply until the filing of a grantable petition pursuant to 37 CFR 1.137(b) was unintentional." A statement that "the entire delay in filing the required reply from the due date (June 30, 2006) until the filing of the petition accompanying this statement was unintentional, signed by only one inventor, accompanies the petition to revive. However, the statement of unintentional delay must be signed by all the applicants, unless

one applicant has been empowered to act on behalf of the other applicant. Therefore, as the petition contains a statement of unintentional delay signed by a registered practitioner, albeit different from the statement required by the rule, the statement appearing in the petition will be construed as the statement required by 37 CFR 1.137(b)(3). Petitioner must notify the Office if this is **not** a correct interpretation of the statement appearing in the petition.

Pursuant to 37 CFR 1.136, an extension of time must be filed prior to the expiration of the maximum period obtainable for reply to avoid abandonment. Accordingly, since the $510 extension of time submitted with the petition on September 20, 2006 was subsequent to the maximum period obtainable for reply, this fee is unnecessary and will be credited to petitioner's deposit account.

Telephone inquiries concerning this decision should be directed to the undersigned at (571) 272-3218.

This matter is being referred to Technology Center AU 1742 for processing the RCE and for appropriate action in the normal course of business on the amendment received September 20, 2006.

Frances Hicks

Frances Hicks
Petitions Examiner
Office of Petitions

UNITED STATES PATENT AND TRADEMARK OFFICE

Commissioner for Patents
United States Patent and Trademark Office
P.O. Box 1450
Alexandria, VA 22313-1450
www.uspto.gov

MILLEN, WHITE, ZELANO & BRANIGAN, P.C.
2200 CLARENDON BLVD.
SUITE 1400
ARLINGTON, VA 22201

COPY MAILED
DEC 24 2008

In re Application of	:	
Michel Faurie	:	
Application No. 10/416,572	:	DECISION ON PETITION
Filed: November 3, 2003	:	
Attorney Docket No. ATL-53	:	

This is a decision on the petition under the unintentional provisions of 37 CFR 1.137(b), filed October 29, 2008, to revive the above-identified application. The delay in responding is regretted.

The petition is **DISMISSED**.

Any request for reconsideration of this decision must be submitted within **TWO (2) MONTHS** from the mail date of this decision. Extensions of time under 37 CFR 1.136(a) are permitted. The reconsideration request should include a cover letter entitled "Renewed Petition under 37 CFR 1.137(b)." This is **not** a final agency action within the meaning of 5 U.S.C. § 704.

The application became abandoned for failure to timely respond to the non-final Office action mailed February 10, 2006. A Notice of Abandonment was mailed on March 16, 2007.

A grantable petition under 37 CFR 1.137(b) must be accompanied by: (1) the required reply, unless previously filed; (2) the petition fee as set forth in 37 CFR 1.17(m); (3) a statement that the entire delay in filing the required reply from the due date for the reply until the filing of a grantable petition pursuant to 37 CFR 1.137(b) was unintentional; and (4) any terminal disclaimer (and fee as set forth in 37 CFR 1.20(d)) required by 37 CFR 1.137(d). Where there is a question as to whether either the abandonment or the delay in filing a petition under 37 CFR 1.137 was unintentional, the Director may require additional

information. *See* MPEP 711.03(c)(II)(C) and (D). The instant petition lacks item (3).

There are three periods to be considered during the evaluation of a petition under 37 CFR 1.137(b):

(1) the delay in reply that originally resulted in the abandonment;

(2) the delay in filing an initial petition pursuant to 37 CFR 1.137(b) to revive the application; and

(3) the delay in filing a grantable petition pursuant to 37 CFR 1.137(b) to revive the application.

Currently, the delay has not been shown to the satisfaction of the Director to be unintentional for periods (1) and (2).

As to Period (1):

The patent statute at 35 U.S.C. § 41(a)(7) authorizes the Director to revive an "unintentionally abandoned application." The legislative history of Public Law 97-247 reveals that the purpose of 35 U.S.C. § 41(a)(7) is to permit the Office to have more discretion than in 35 U.S.C. §§ 133 or 151 to revive abandoned applications in appropriate circumstances, but places a limit on this discretion, stating that "[u]nder this section a petition accompanied by either a fee of $500 or a fee of $50 **would not be granted where the abandonment** or the failure to pay the fee for issuing the patent **was intentional** as opposed to being unintentional or unavoidable." [emphasis added]. See H.R. Rep. No. 542, 97th Cong., 2d Sess. 6-7 (1982), *reprinted in* 1982 U.S.C.C.A.N. 770-71. The revival of an intentionally abandoned application is antithetical to the meaning and intent of the statute and regulation.

35 U.S.C. § 41(a)(7) authorizes the Director to accept a petition "for the revival of an unintentionally abandoned application for a patent." As amended December 1, 1997, 37 CFR 1.137(b)(3) provides that a petition under 37 CFR 1.137(b) must be accompanied by a statement that the delay was unintentional, but provides that "[t]he Commissioner may require additional information where there is a question whether the delay was unintentional." Where, as here, there is a question whether the initial delay was unintentional, the petitioner must meet the

burden of establishing that the delay was unintentional within the meaning of 35 U.S.C. § 41(a)(7) and 37 CFR 1.137(b). *See* In re Application of G, 11 USPQ2d 1378, 1380 (Comm'r Pats. 1989); 37 CFR 1.137(b). Here, in view of the inordinate delay (over 2 years) in resuming prosecution, there is a question whether the entire delay was unintentional. Petitioner should note that the issue is not whether some of the delay was unintentional by any party; rather, the issue is whether the entire delay has been shown to the satisfaction of the Director to be unintentional.

The question under 37 CFR 1.137(b) for period (1) is whether the delay on the part of the party having the right or authority to reply to avoid abandonment (or not reply) was unintentional. Accordingly, any renewed petition must clearly identify the party having the right to reply to avoid abandonment on May 11, 2006. That party, in turn must explain what effort(s) was made to further reply to the outstanding Office action and, further, why no reply was filed. If no effort was made to further reply, then that party must explain why the delay in this application does not result from a deliberate course of action (or inaction). As MILLEN, WHITE, ZELANO & BRANIGAN, P.C was the counsels of record at the time of abandonment, they should explain why this application became abandoned while it was under their control and what efforts they made to reply and with whom this matter was discussed outside of MILLEN, WHITE, ZELANO & BRANIGAN, P.C. Copies of any correspondence relating to the filing, or to not filing a further reply to the outstanding Office action are required from the responsible person, and whoever else was involved with this application at the time of abandonment. Statements are required from any and all persons at MILLEN, WHITE, ZELANO & BRANIGAN, P.C, and the responsible person(s) having firsthand knowledge of the circumstances surrounding the lack of a reply to the outstanding Office action. As the courts have made clear, it is pointless for the USPTO to revive a long abandoned application without an adequate showing that the delay did not result from a deliberate course of action. *See* Lawman Armor v. Simon, 2005 U.S. Dist. LEXIS 10843, 74 USPQ2d 1633 (DC EMich 2005); Field Hybrids, LLC v. Toyota Motor Corp., 2005 U.S. Dist. LEXIS 1159 (D. Minn Jan. 27, 2005); Lumenyte Int'l Corp. v. Cable Lite Corp., Nos. 96-1011, 96-1077, 1996 U.S. App. LEXIS 16400, 1996 WL 383927 (Fed. Cir. July 9, 1996) (unpublished) (patents held unenforceable due to a finding of inequitable conduct in submitting an inappropriate statement that the abandonment was unintentional).

As to Period (2):

Likewise, where the applicant deliberately chooses not to seek or persist in seeking the revival of an abandoned application, or where the applicant deliberately chooses to delay seeking the revival of an abandoned application, the resulting delay in seeking revival of the abandoned application cannot be considered as "unintentional" within the meaning of 37 CFR 1.137(b). *See* MPEP 711.03(c).

The language of both 35 U.S.C. § 41(a)(7) and 37 CFR 1.137(b) are clear and unambiguous, and, furthermore, without qualification. That is, the delay in filing the reply during prosecution, as well as in filing the petition seeking revival, must have been, without qualification, "unintentional" for the reply to now be accepted on petition. The Office requires that the entire delay be at least unintentional as a prerequisite to revival of an abandoned application to prevent abuse and injury to the public. *See* H.R. Rep. No. 542, 97th Cong., 2d Sess. 7 (1982), reprinted in 1982 U.S.C.C.A.N. 771 ("[i]n order to prevent abuse and injury to the public the Commissioner . . . could require applicants to act promptly after becoming aware of the abandonment"). The December 1997 change to 37 CFR 1.137 did not create any new right to overcome an intentional delay in seeking revival, or in renewing an attempt at seeking revival, of an abandoned application. *See* Changes to Patent Practice and Procedure; Final Rule Notice, 62 Fed. Reg. 53131, 53160 (October 10, 1997), 1203 Off. Gaz. Pat. Office 63, 87 (October 21, 1997), which clearly stated that any protracted delay (here, over 2 years) could trigger, as here, a request for additional information. As the courts have since made clear, a protracted delay in seeking revival, as here, requires a petitioner's detailed explanation seeking to excuse the delay as opposed to USPTO acceptance of a general allegation of unintentional delay. *See* Lawman Armor v. Simon, 2005 U.S. Dist. LEXIS 10843, 74 USPQ2d 1633, at 1637-8 (DC EMich 2005); Field Hybrids, LLC v. Toyota Motor Corp., 2005 U.S. Dist. LEXIS 1159 (D. Minn Jan. 27, 2005) at *21-*23. Statements are required from any and all persons then at MILLEN, WHITE, ZELANO & BRANIGAN, P.C and the responsible person(s) having firsthand knowledge of the circumstances surrounding the protracted delay, after the abandonment date, in seeking revival.

As noted in MPEP 711.03(c)(II), subsection D, in instances in which such petition was not filed within 1 year of the date of abandonment of the application, applicants should include:

(A) the date that the applicant first became aware of the abandonment of the application; and

(B) a showing as to how the delay in discovering the abandoned status of the application occurred despite the exercise of due care or diligence on the part of the applicant.

In either instance, applicant's failure to carry the burden of proof to establish that the "entire" delay was "unavoidable" or "unintentional" may lead to the denial of a petition under 37 CFR 1.137(b), regardless of the circumstances that originally resulted in the abandonment of the application. *See also* New York University v. Autodesk,, 2007 U.S. DIST LEXIS, U.S.District LEXIS 50832, *10 -*12 (S.D.N.Y. 2007)(protracted delay in seeking revival undercuts assertion of unintentional delay).

Additionally, finance records show that petitioner submitted $650 on April 3, 2006 for treatment of the instant petition. However effective December 8, 2004, the small entity petition to revive fee is listed as $750. Therefore, the difference of $100 will be charged to petitioner's deposit account, as authorized in the supplemental petition filed on May 19, 2006.

Any renewed petition may be addressed as follows:

By mail: Mail Stop PETITION
Commissioner for Patents
P.O. Box 1450
Alexandria, VA 22313-1450

By hand: U.S. Patent and Trademark Office
Customer Service Window, Mail Stop Petitions
Randolph Building
401 Dulany Street
Alexandria, VA 22314

The centralized facsimile number is **(571) 273-8300.**

Correspondence regarding this decision may also be filed through the electronic filing system of the USPTO.

Telephone inquiries concerning this decision should be directed to the undersigned at (571) 272-3226.

Andrea Smith
Petitions Examiner
Office of Petitions

UNITED STATES PATENT AND TRADEMARK OFFICE

Commissioner for Patents
United States Patent and Trademark Office
P.O. Box 1450
Alexandria, VA 22313-1450
www.uspto.gov

MILLEN, WHITE, ZELANO & BRANIGAN, P.C.
2200 CLARENDON BLVD.
SUITE 1400
ARLINGTON, VA 22201

COPY MAILED

JUN 25 2009

OFFICE OF PETITIONS

In re Application of	:	
Michel Faurie	:	
Application No. 10/416,572	:	DECISION ON PETITION
Filed: November 3, 2003	:	
Attorney Docket No. ATL-53	:	

This is a decision on the renewed petition under the 37 CFR 1.137(b), filed April 20, 2009, to revive the above-identified application.

The present petition is not signed by an attorney of record. However, in accordance with 37 CFR 1.34(a), the signature of Csaba Henter appearing on the petition shall constitute a representation to the United States Patent and Trademark Office that he/she is authorized to represent the particular party on whose behalf he/she acts.

In response to the decision mailed December 24, 2008, petitioner submits the present renewed petition along with $490 for a two months extension of time.

Since the above-identified application has been abandoned for an extended period of time, the Patent and Trademark Office is relying on petitioner's duty of candor and good faith and accepting the statement that the entire delay in filing the required reply from the due date for the reply until the filing of a grantable petition pursuant to 37 CFR 1.137(b) was unintentional. See Changes to Patent Practice and Procedure, 62 Fed. Reg. at 53160 and 53178; 1203 Off. Gaz. Pat. Office at 88 and 103 (responses to comments 64 and 109) (applicant obligated under 37 CFR 10.18 to inquire into the underlying facts and circumstances when providing the statement required by 37 CFR 1.137(b) to the Patent and Trademark Office).

The renewed petition satisfies the requirements of 37 CFR 1.137(b), in that petitioner has supplied (1) the reply in the form of an amendment; (2) the petition fee of $1,620; and (3) a proper statement of unintentional delay, the petition is **GRANTED**.

This application file is being referred to Technology Center Art Unit 3754 for review of the amendment filed on October 29, 2008.

Telephone inquiries concerning this decision should be directed to the undersigned at (571) 272-3226.

Andrea Smith
Petitions Examiner
Office of Petitions

PTO/SB/66 (03-09)
Approved for use through 03/31/2012. OMB 0651-0016
U.S. Patent and Trademark Office: U.S. DEPARTMENT OF COMMERCE
Under the Paperwork Reduction Act of 1995, no persons are required to respond to a collection of information unless it displays valid OMB control number.

PETITION TO ACCEPT UNINTENTIONALLY DELAYED PAYMENT OF MAINTENANCE FEE IN AN EXPIRED PATENT (37 CFR 1.378(c))

Patent Number	Issue Date (YYYY-MM-DD)	Application Number	Filing Date (YYYY-MM-DD)	Docket Number (if applicable)
6922872	2005-08-02	10416584	2003-05-13	BAE 3049

CAUTION: Maintenance fee (and surcharge, if any) payment must correctly identify: (1) the patent number and (2) the application number of the actual U.S. application leading to issuance of that patent to ensure the fee(s) is/are associated with the correct patent. 37 CFR 1.366(c) and (d).

SMALL ENTITY
☐ Patentee claims, or has previously claimed, small entity status. See 37 CFR 1.27.

LOSS OF ENTITLEMENT TO SMALL ENTITY STATUS
☐ Patentee is no longer entitled to small entity status. See 37 CFR 1.27(g)

NOT Small Entity		Small Entity	
Fee	Code	Fee	Code
◉ 3 ½ year	(1551)	○ 3 ½ year	(2551)
○ 7 ½ year	(1552)	○ 7 ½ year	(2552)
○ 11 ½ year	(1553)	○ 11 ½ year	(2553)

SURCHARGE
The surcharge required by 37 CFR 1.20(i)(2) (Fee Code 1558) must be paid as a condition of accepting unintentionally delayed payment of the maintenance fee.

MAINTENANCE FEE (37 CFR 1.20(e)-(g))
The appropriate maintenance fee must be submitted with this petition.

STATEMENT
THE UNDERSIGNED CERTIFIES THAT THE DELAY IN PAYMENT OF THE MAINTENANCE FEE TO THIS PATENT WAS UNINTENTIONAL

PETITIONER(S) REQUEST THAT THE DELAYED PAYMENT OF THE MAINTENANCE FEE BE ACCEPTED AND THE PATENT REINSTATED

THIS PORTION MUST BE COMPLETED BY THE SIGNATORY OR SIGNATORIES

37 CFR 1.378(d) states: "Any petition under this section must be signed by an attorney or agent registered to practice before the Patent and Trademark Office, or by the patentee, the assignee, or other party in interest."

I certify, in accordance with 37 CFR 1.4(d)(4) that I am

◉ An attorney or agent registered to practice before the Patent and Trademark Office

○ A sole patentee

○ A joint patentee; I certify that I am authorized to sign this submission on behalf of all the other patentees.

○ A joint patentee; all of whom are signing this e-petition

○ The assignee of record of the entire interest

Patent Practitioner			
A signature of the applicant or representative is required in accordance with 37 CFR 1.33 and 10.18. Please see 37 CFR 1.4(d) for the form of the signature			
Signature	/Arlir M. Amado/	Date (YYYY-MM-DD)	2009-11-03
Name	Arlir M. Amado	Registration Number	51399

This collection of information is required by 37 CFR 1.378(c). The information is required to obtain or retain a benefit by the public which is to file (and by the USPTO to process) an application. Confidentiality is governed by 35 U.S.C. 122 and 37 CFR 1.11 and 1.14. This collection is estimated to take 1 hour to complete, including gathering, preparing, and submitting the completed application form to the USPTO. Time will vary depending upon the individual case. Any comments on the amount of time you require to complete this form and/ or suggestions for reducing this burden, should be sent to the Chief Information Officer, U.S. Patent and Trademark Office, U.S. Department of Commerce, P.O. Box 1450, Alexandria, VA 22313-1450. DO NOT SEND FEES OR COMPLETED FORMS TO THIS ADDRESS. **This form can only be used when in conjunction with EFS-Web. If this form is mailed to the USPTO, it may cause delays in reinstating the patent.**

Privacy Act Statement

The Privacy Act of 1974 (P.L. 93-579) requires that you be given certain information in connection with your submission of the attached form related to a patent application or patent. Accordingly, pursuant to the requirements of the Act, please be advised that: (1) the general authority for the collection of this information is 35 U.S.C. 2(b)(2); (2) furnishing of the information solicited is voluntary; and (3) the principal purpose for which the information is used by the U.S. Patent and Trademark Office is to process and/or examine your submission related to a patent application or patent. If you do not furnish the requested information, the U.S. Patent and Trademark Office may not be able to process and/or examine your submission, which may result in termination of proceedings or abandonment of the application or expiration of the patent.

The information provided by you in this form will be subject to the following routine uses:

1. The information on this form will be treated confidentially to the extent allowed under the Freedom of Information Act (5 U.S.C. 552) and the Privacy Act (5 U.S.C. 552a). Records from this system of records may be disclosed to the Department of Justice to determine whether the Freedom of Information Act requires disclosure of these records.

2. A record from this system of records may be disclosed, as a routine use, in the course of presenting evidence to a court, magistrate, or administrative tribunal, including disclosures to opposing counsel in the course of settlement negotiations.

3. A record in this system of records may be disclosed, as a routine use, to a Member of Congress submitting a request involving an individual, to whom the record pertains, when the individual has requested assistance from the Member with respect to the subject matter of the record.

4. A record in this system of records may be disclosed, as a routine use, to a contractor of the Agency having need for the information in order to perform a contract. Recipients of information shall be required to comply with the requirements of the Privacy Act of 1974, as amended, pursuant to 5 U.S.C. 552a(m).

5. A record related to an International Application filed under the Patent Cooperation Treaty in this system of records may be disclosed, as a routine use, to the International Bureau of the World Intellectual Property Organization, pursuant to the Patent Cooperation Treaty.

6. A record in this system of records may be disclosed, as a routine use, to another federal agency for purposes of National Security review (35 U.S.C. 181) and for review pursuant to the Atomic Energy Act (42 U.S.C. 218(c)).

7. A record from this system of records may be disclosed, as a routine use, to the Administrator, General Services, or his/her designee, during an inspection of records conducted by GSA as part of that agency's responsibility to recommend improvements in records management practices and programs, under authority of 44 U.S.C. 2904 and 2906. Such disclosure shall be made in accordance with the GSA regulations governing inspection of records for this purpose, and any other relevant (i.e., GSA or Commerce) directive. Such disclosure shall not be used to make determinations about individuals.

8. A record from this system of records may be disclosed, as a routine use, to the public after either publication of the application pursuant to 35 U.S.C. 122(b) or issuance of a patent pursuant to 35 U.S.C. 151. Further, a record may be disclosed, subject to the limitations of 37 CFR 1.14, as a routine use, to the public if the record was filed in an application which became abandoned or in which the proceedings were terminated and which application is referenced by either a published application, an application open to public inspections or an issued patent.

9. A record from this system of records may be disclosed, as a routine use, to a Federal, State, or local law enforcement agency, if the USPTO becomes aware of a violation or potential violation of law or regulation.

UNITED STATES PATENT AND TRADEMARK OFFICE

Commissioner for Patents
United States Patent and Trademark Office
P.O. Box 1450
Alexandria, VA 22313-1450
www.uspto.gov

In re Patent No. 6922872
Issue Date: August 2,2005
Application No. 10416584
Filed: May 13,2003
Attorney Docket No. BAE 3049

:

:DECISION GRANTING PETITION
:UNDER 37 CFR 1.378(c)

:

This is a decision on the electronic petition, filed November 4,2009 ,under 37 CFR 1.378(c) to accept the unintentionally delayed payment of the 3.5 year maintenance fee for the above-identified patent.

The petition is **GRANTED**.

The maintenance fee is accepted, and the above-identified patent reinstated as of November 4,2009 . This decision also constitutes notice that the fee has been accepted. An electronic copy of the petition and this decision has been created as an entry in the Image File Wrapper. Nevertheless, petitioner should print and retain an independent copy.

Telephone inquiries related to this electronic decision should be directed to the Electronic Business Center at 1-866-217-9197.

30 SEP 2003

#5

UNITED STATES PATENT AND TRADEMARK OFFICE

COMMISSIONER FOR PATENTS
UNITED STATES PATENT AND TRADEMARK OFFICE
ALEXANDRIA, VA 22313-1450
www.uspto.gov

David T. Nikaido
Rader, Fishman & Grauer PLLC
1233 20th St., NW
Suite 501
Washington, DC 20036

In re Application of Nakaya et al. Application No. 10/416,586 PCT No.: PCT/JP01/05671 Int. Filing Date: 29 June 2001 Priority Date: 04 August 2000 Atty. Docket No.: NFA-0201 For: Nile-Red Luminescent Compound Emitting Red Light, Process For Producing The Same And Luminescent Element Utilizing...	DECISION ON PETITION UNDER 37 CFR 1.137(b)

This is in response to the petition under 37 CFR 1.137(b) filed on 13 May 2003.

BACKGROUND

This international application was filed on 29 June 2001, claimed an earliest priority date of 04 August 2000, and designated the U.S. On 14 February 2002, the International Bureau transmitted a copy of the published international application to the USPTO. Accordingly, the 30 month time period for paying the basic national fee in the United States expired at midnight on 04 February 2003. This international application became abandoned with respect to the United States for failure to timely pay the required basic national fee.

DISCUSSION

A grantable petition to revive an abandoned application under 37 CFR 1.137(b) must be accompanied by (1) the required reply, unless previously filed; (2) the petition fee as set forth in § 1.17(m); (3) a statement that the entire delay in filing the required reply from the due date for the reply until the filing of a grantable petition pursuant to this paragraph was unintentional. The Commissioner may require additional information where there is a question whether the delay was unintentional; and (4) any terminal disclaimer (and fee as set forth in § 1.20 (d)) required pursuant to paragraph (c) of this section.

Regarding requirement (1), the petition was accompanied by the basic national fee.

Regarding requirement (2), the petition was accompanied by the petition fee.

Regarding requirement (3), the petition includes a statement that "the entire delay in

filing an appropriate resposne from the due date for the reply to the filing of this grantable peition was unintentional, and hence the abandonment of this application was unintentional." This statement is being construed as a statement that "the entire delay in filing the required reply from the due date for the reply until the filing of a grantable petition pursuant to 37 CFR 1.137(b) was unintentional." Petitioner must notify the Patent and Trademark Office if such an interpretation of the statement in the petition is not correct. Thus, the statement in the petition is being accepted in satisfaction of 37 CFR 1.137(b)(3).

Regarding requirement (4), no terminal disclaimer is required because the international filing date of this application is later than 8 June 1995.

DECISION

The petition under 37 CFR 1.137(b) is **GRANTED** as to the national stage in the United States.

Counsel's Deposit Account No. 18-0013 is being charged in the amount of $65.00 for the surcharge under 37 CFR 1.492(e), as authorized by the Transmittal Letter filed on 13 May 2003.

This application is being forwarded to the National Stage Processing Branch for further processing. Its date under 35 U.S.C. 371(c)(1), (2) and (4) is **13 May 2003**.

Leonard Smith
PCT Legal Examiner
PCT Legal Office

George M. Dombroske
PCT Legal Examiner
PCT Legal Office
Tel: (703) 308-6721
Fax: (703) 308-6459

OIPE
NOV 18 2005
PATENT & TRADEMARK OFFICE

PTO/SB/83 (04-05)
Approved for use through 11/30/2005. OMB 0651-0035
U.S. Patent and Trademark Office, U.S. DEPARTMENT OF COMMERCE
Under the Paperwork Reduction Act of 1995, no persons are required to respond to a collection of information unless it displays a valid OMB control number.

REQUEST FOR WITHDRAWAL AS ATTORNEY OR AGENT AND CHANGE OF CORRESPONDENCE ADDRESS

Application Number	10/416 589
Filing Date	December 12, 2003
First Named Inventor	Wanda Kiiskila
Art Unit	1618
Examiner Name	Jones
Attorney Docket Number	Wanda Kiiskila Case 2

To: Commissioner for Patents
P.O. Box 1450
Alexandria, VA 22313-1450

Please withdraw me as attorney or agent for the above identified patent application, and

- [x] all the attorneys/agents of record.
- [ ] the attorneys/agents (with registration numbers) listed on the attached paper(s), or
- [x] the attorneys/agents associated with Customer Number 23474

NOTE: This box can only be checked when the power of attorney of record in the application is to all the practitioners associated with a customer number.

The reasons for this request are: that the client owes a balance of SIXTEEN-THOUSAND FOUR HUNDRED EIGHTY-FOUR AND 79/100 DOLLARS ($16,484.79) on her account (Exhibit A), has filed a Petition for bankruptcy under Chapter 7 of the Bankruptcy Act (Exhibit B) and has been discharged from bankruptcy (Exhibit C). A copy of this Request For Withdrawal has been sent to the client with a letter informing client of same (Exhibit D).

[Approved] 12/2/05 MCS

CORRESPONDENCE ADDRESS

1. [ ] The correspondence address is NOT affected by this withdrawal.
2. [x] Change the correspondence address and direct all future correspondence to:

[ ] The address associated with Customer Number:

OR

[ ] Firm or Individual Name	Wanda Kiiskila				
Address	17685 West Meceola Road				
City	Hersey	State	MI	Zip	49639
Country					
Telephone		Email			
Signature	Sidney B. Williams Jr.				
Name	Sidney B. Williams, Jr.	Registration No.	24 949		
Date	November 14, 2005	Telephone No.	269/381-1156		

NOTE: Withdrawal is effective when approved rather than when received. Unless there are at least 30 days between approval of withdrawal and the expiration date of a time period for response or possible extension period, the request to withdraw is normally disapproved.

This collection of information is required by 37 CFR 1.36. The information is required to obtain or retain a benefit by the public which is to file (and by the USPTO to process) an application. Confidentiality is governed by 35 U.S.C. 122 and 37 CFR 1.11 and 1.14. This collection is estimated to take 12 minutes to complete, including gathering, preparing, and submitting the completed application form to the USPTO. Time will vary depending upon the individual case. Any comments on the amount of time you require to complete this form and/or suggestions for reducing this burden, should be sent to the Chief Information Officer, U.S. Patent and Trademark Office, U.S. Department of Commerce, P.O. Box 1450, Alexandria, VA 22313-1450. DO NOT SEND FEES OR COMPLETED FORMS TO THIS ADDRESS. SEND TO: **Commissioner for Patents, P.O. Box 1450, Alexandria, VA 22313-1450.**

If you need assistance in completing the form, call 1-800-PTO-9199 and select option 2.

UNITED STATES PATENT AND TRADEMARK OFFICE

UNITED STATES DEPARTMENT OF COMMERCE
United States Patent and Trademark Office
Address: COMMISSIONER FOR PATENTS
P.O. Box 1450
Alexandria, Virginia 22313-1450
www.uspto.gov

KENYON & KENYON LLP
ONE BROADWAY
NEW YORK, NY 10004

Mail Date: 04/21/2010

Applicant	: Werner Bernhard	: DECISION ON REQUEST FOR
Patent Number	: 7650809	: RECALCULATION of PATENT
Issue Date	: 01/26/2010	: TERM ADJUSTMENT IN VIEW
Appliction No	: 10/416,590	: OF WYETH AND NOTICE OF INTENT TO
Filed	: 10/14/2003	: ISSUE CERTIFICATE OF CORRECTION
		:

The Request for Recalculation is **GRANTED** to the extent indicated.

The patent term adjustment has been determined to be **918** days. The USPTO will *sua sponte* issue a certificate of correction reflecting the amount of PTA days determined by the recalculation.

Prior to the issuance of the certificate of correction, the USPTO will afford patentee an opportunity to be heard and request reconsideration. Accordingly, patentee has **one month or thirty (30) days**, whichever is longer, to file a request for reconsideration of this patent term adjustment calculation. See 35 U.S.C. 154(b)(3)(B)(ii) and 37 CFR 1.322(a)(4). No extensions of time will be granted under 37 CFR 1.136.

Patentee should use document code PET.OP if electronically filing a request for reconsideration of this patent term adjustment calculation. The patentee must also include the information required by 37 CFR 1.705(b)(2) and the fee required by 37 CFR 1.18(e). If patentee does not file a timely request for reconsideration of this patent term adjustment calculation including the information required by 37 CFR 1.705(b)(2) and the fee required by 37 CFR 1.18(e), the USPTO will issue a certificate of correction reflecting the PTA determination noted above.

Patentee should be aware that in order to preserve the right to review in the United States District Court for the District of Columbia of the USPTO patent term adjustment determination, patentee must ensure that he or she also take the steps required under 35 U.S.C. 154(b)(4)(A) in a timely manner. Nothing in the request for recalculation should be construed as providing an alternative time frame for commencing a civil action under 35 U.S.C. 154(b)(4)(A).

Any questions concerning this decision should be directed to the Office of Patent Legal Administration at 571-272-7702.

06 FEB 2004

#3

UNITED STATES PATENT AND TRADEMARK OFFICE

COMMISSIONER FOR PATENTS
UNITED STATES PATENT AND TRADEMARK OFFICE
P.O. BOX 1450
ALEXANDRIA, VA 22313-1450
www.uspto.gov

ALFRED H. MURATORI
MICROCOATING TECHNOLOGIES, INC.
5315 PEACHTREE INDUSTRIAL BLVD
ATLANTA, GA 30341-2107

In re Application of FAGUY et al. Serial No.: 10/416,593 PCT No.: PCT/US01/48581 Int. Filing Date: 26 October 2001 Priority Date: 27 October 2000 Attorney's Docket No.: 0065-EC-US For: FUEL CELL HAVING IMPROVED CATALYTIC LAYER	DECISION ON PETITION UNDER 37 CFR 1.137(b)

The petition to revive under 37 CFR 1.137(b) filed 12 May 2003 in the above-captioned application is hereby **GRANTED** as follows:

Applicant's statement that the "entire delay in filing the required reply from the due date for the required reply until the filing of a grantable petition under 37 CFR 1.137(b) was unintentional" meets the requirements of 37 CFR 1.137(b)(3) at the time of filing this petition.

A review of the application file reveals that the basic national fee of $50 has been paid. The required petition fee of $650 has also been paid. Thus, the requirements of 37 CFR 1.137(b) have been satisfied. Therefore, the request to revive the application abandoned under 35 U.S.C. 371(d) is granted as to the National stage in the United States of America.

A review of the PCT Rule 4.17 declaration, filed on 27 February 2003 with the United States Receiving Office,reveals that it is incomplete because all of the inventors identified in the published international application were not listed and thus, did not sign the declaration.

This application is being forwarded to the United States Designated/Elected Office for further processing including issuance of a Notification of Missing Requirements indicating that an oath or declaration executed by the inventors, in compliance with 37 CFR 1.497(a) and (b), is required. The $65 surcharge for filing the oath or declaration after the thirty month period is also required.

Cynthia M. Kratz

Cynthia M. Kratz
Attorney Advisor
PCT Legal Office

Telephone: (703) 306-5467

UNITED STATES PATENT AND TRADEMARK OFFICE

UNITED STATES DEPARTMENT OF COMMERCE
United States Patent and Trademark Office
Address: COMMISSIONER FOR PATENTS
P.O. Box 1450
Alexandria, Virginia 22313-1450
www.uspto.gov

TAROLLI, SUNDHEIM, COVELL & TUMMINO L.L.P.
1300 EAST NINTH STREET, SUITE 1700
CLEVELAND, OH 44114

Mail Date: 04/26/2010

Applicant	: Philip William Kemp	: DECISION ON REQUEST FOR
Patent Number	: 7618673	: RECALCULATION of PATENT
Issue Date	: 11/17/2009	: TERM ADJUSTMENT IN VIEW
Application No	: 10/416,602	: OF WYETH AND NOTICE OF INTENT TO
Filed	: 09/15/2003	: ISSUE CERTIFICATE OF CORRECTION
		:

The Request for Recalculation is **GRANTED** to the extent indicated.

The patent term adjustment has been determined to be **1351** days. The USPTO will *sua sponte* issue a certificate of correction reflecting the amount of PTA days determined by the recalculation.

Prior to the issuance of the certificate of correction, the USPTO will afford patentee an opportunity to be heard and request reconsideration. Accordingly, patentee has **one month or thirty (30) days**, whichever is longer, to file a request for reconsideration of this patent term adjustment calculation. See 35 U.S.C. 154(b)(3)(B)(ii) and 37 CFR 1.322(a)(4). No extensions of time will be granted under 37 CFR 1.136.

Patentee should use document code PET.OP if electronically filing a request for reconsideration of this patent term adjustment calculation. The patentee must also include the information required by 37 CFR 1.705(b)(2) and the fee required by 37 CFR 1.18(e). If patentee does not file a timely request for reconsideration of this patent term adjustment calculation including the information required by 37 CFR 1.705(b)(2) and the fee required by 37 CFR 1.18(e), the USPTO will issue a certificate of correction reflecting the PTA determination noted above.

Patentee should be aware that in order to preserve the right to review in the United States District Court for the District of Columbia of the USPTO patent term adjustment determination, patentee must ensure that he or she also take the steps required under 35 U.S.C. 154(b)(4)(A) in a timely manner. Nothing in the request for recalculation should be construed as providing an alternative time frame for commencing a civil action under 35 U.S.C. 154(b)(4)(A).

Any questions concerning this decision should be directed to the Office of Patent Legal Administration at 571-272-7702.

0 9 NOV 2004
UNITED STATES PATENT AND TRADEMARK OFFICE

COMMISSIONER FOR PATENTS
UNITED STATES PATENT AND TRADEMARK OFFICE
P.O. BOX 1450
ALEXANDRIA, VA 22313-1450
www.uspto.gov

Robin W. Asher
CLARK HILL PLC
500 Woodward Avenue, Suite 3500
Detroit, MI 48226-3435

In re Application of
BRONNER, Martin *et al*
U.S. Application No.: 10/416,605
PCT No.: PCT/IB01/02136
Int. Filing Date: 13 November 2001
Priority Date: 13 November 2000
Attorney's Docket No.: MSS Gmbh
For: DEFLECTION FITTING FOR THE SAFETY BELT OF A MOTOR VEHICLE

DECISION

This is a decision on the papers titled "Petition to Withdraw Holding of Abandonment Under 37 C.F.R. §1.181(a)" ("Pet.") filed 05 February 2004. No fee is required.

BACKGROUND

On 13 May 2003, applicants filed a transmittal letter for entry into the national stage in the United States under 35 U.S.C. 371 which was accompanied by, *inter alia*, a Credit Card Payment Form (PTO-2038) authorizing the Office to charge the required basic national fee to applicants credit card account.

On 24 October 2003, the Office mailed a "Notice of Abandonment Under 37 CFR 1.53(f) or (g)" for failure to timely or properly reply to a Notice to File Missing Parts which was purportedly mailed.

On 04 December 2003, the DO/EO/US mailed a "Withdrawal of Previously Sent Notice" vacating the prior notice of abandonment filed 24 October 2003 as it was sent in error. But the DO/EO/US also mailed a "Notification of Abandonment (Form PCT/DO/EO/909)" to applicants for failure to provide the full U.S. Basic National Fee by 30 months pursuant to 37 CFR 1.495(b)(2).

On 05 February 2004, applicants submitted the instant petition to withdraw the holding of abandonment which was accompanied by, *inter alia*, exhibits 1 - 9.

DISCUSSION

A review of the above-identified application shows that the Credit Card Payment Form (PTO-2038) was received by the Office with the national stage papers on 13 May 2003. However, the Office of Finance indicated in a note located in the file that the

basic national fee was not paid because of a "CREDIT CARD DECLINE."

In the instant petition, applicants claim that there were sufficient funds available in the credit card account submitted to pay the required $900.00 basic national fee. In support of this claim, applicants provided two credit card statements. Applicants also argue that the Office should have informed applicants of the lack of credit card funds to provide notice and an alternative means of payment of the filing fee.

These two claims have been considered and refused.

Credit Card Contained Sufficient Funds to Pay the $900.00 Basic National Fee

Petitioners state that "Applicant determined that there were indeed sufficient funds available from the filing date of May 13, 2003 to at least July 10, 2003 to cover the cost of the basic national filing fee of $900.00." Pet. at ¶ 10. Petitioners provided two copies of credit card statements with the instant petition in support of this claim.

A review of the credit card statement for 17 April 2003 to 16 May 2003 indicated that the balance exceeded the available revolving credit line and that the total available credit line was $.00. Applicants did not provide a credit card statement for 17 May 2003 to 16 June 2003. Moreover, the above-captioned application was filed 13 May 2003. The notice from the Office of Finance that the credit card was declined is dated 09 June 2003. Thus, the credit card statement for 17 June 2003 to 16 July 2003 is not relevant since the first transaction is dated 16 June 2003.

In order to have a grantable petition, applicants must explain why the credit card statement for 17 April 2003 to 16 May 2003 appears to be over its limit. Applicants should also provide a credit card statement for the period 17 May 2003 to 16 June 2003. Petitioners have the burden to show that the credit card account had sufficient funds to pay the basic national fee of $900.00. In this case, this burden has not yet been met.

The Office Should Have Provided Notice to Provide Applicant an Alternative Means of Payment

In all national stage applications, applicants must provide the full basic fee by 30 months from the earliest claimed priority date pursuant to 37 CFR 1.495(b)(2). Here, applicants needed to pay the basic national fee of $900.00 by 13 May 2003. Applicants attempted to pay this fee on 11 May 2003 using a Credit Card Payment Form (PTO-2038).

However, the credit card was declined during normal processing in the Office of

Finance. Applicants had not provided any other means to pay the basic national fee such as deposit account authorization on the transmittal letter. By the time the credit card was processed, the time period had expired. Thus, no notice is required at that point. The above-captioned application was abandoned by operation of law.

DECISION

For the reasons noted above, applicants' petition to withdraw the holding of abandonment is **DISMISSED** without prejudice.

The above-captioned application remains **ABANDONED**.

If reconsideration on the merits of this petition is desired, a proper response must be filed within **TWO (2) MONTHS** from the mail date of this decision. Any reconsideration request should include a cover letter entitled "Renewed Petition Under 37 CFR 1.181." No fee is required. Applicants may also wish to consider to revive the above-captioned application pursuant to 37 CFR 1.137(a) or (b).

Any further correspondence with respect to this matter deposited with the United States Postal Service should be addressed to the Mail Stop PCT, Commissioner for Patents, Office of PCT Legal Administration, P.O. Box 1450, Alexandria, Virginia 22313-1450, with the contents of the letter marked to the attention of the Office of PCT Legal Administration.

James Thomson
Attorney Advisor
Office of PCT Legal Administration

Tel.: (571) 272-3302

03 MAY 2005

#7

UNITED STATES PATENT AND TRADEMARK OFFICE

Commissioner for Patents
United States Patent and Trademark Office
P.O. Box 1450
Alexandria, VA 22313-1450
www.uspto.gov

Robin W. Asher
CLARK HILL PLC
500 Woodward Avenue, Suite 3500
Detroit, MI 48226-3435

In re Application of	:	
BRONNER, Martin *et al*	:	
U.S. Application No.: 10/416,605	:	
PCT No.: PCT/IB01/02136	:	
Int. Filing Date: 13 November 2001	:	**DECISION**
Priority Date: 13 November 2000	:	
Attorney's Docket No.: MSS Gmbh	:	
For: DEFLECTION FITTING FOR THE SAFETY	:	
BELT OF A MOTOR VEHICLE	:	

Applicants' "Petition for Revival of an Application for Patent Abandoned Unintentionally Under 37 CFR 1.137(b)" filed on 22 November 2004 is hereby **GRANTED** as follows:

The basic national fee and petition fee have been paid. Applicants state that "[t]he entire delay in filing the required reply from the due date for the reply until the filing of a grantable petition under 37 CFR 1.137(b) was unintentional" as required by 37 CFR 1.137(b)(3). A terminal disclaimer is not required. Accordingly, all requirements under 37 CFR 1.137(b) have been satisfied.

A signed oath or declaration was not included with any of the papers submitted.

This application is being forwarded to the United States Designated/Elected Office for further processing including mailing a Notification of Missing Requirements Under 35 U.S.C. 371 in the United States Designated/Elected Office (DO/EO/US) (Form PCT/DO/EO/905) indicating that an oath or declaration in compliance with 37 CFR 1.497(a) and (b) and a surcharge fee are required.

James Thomson

James Thomson
Attorney Advisor
Office of PCT Legal Administration

Tel.: (571) 272-3302

05 APR 2004

#10

UNITED STATES PATENT AND TRADEMARK OFFICE

COMMISSIONER FOR PATENTS
UNITED STATES PATENT AND TRADEMARK OFFICE
P.O. BOX 1450
ALEXANDRIA, VA 22313-1450
www.uspto.gov

Jeffrey M. Greenman
Bayer Pharmaceuticals Corporation
400 Morgan Lane
West Haven, Connecticut 06516

In re Application of :
ALBRECHT et al. :
Application No.: 10/416,622 : DECISION ON PETITION
PCT No.: PCT/EP01/12694 : UNDER 37 CFR 1.182
Int. Filing Date: 02 November 2001 :
Priority Date: 14 November 2000 :
Attorney Docket No.: LeA34751 :
For: SUBSTITUTED AMIDOALKYL URACILS AND THEIR USE AS INHIBITORS OF . . .

This decision is in response to applicants' "Petition under 37 CFR 1.182 for Change Inventor's Name Due to Marriage " filed on 01 March 2004. Applicants are requesting to change the name of the third named inventor from Gabriele Handke to Gabriele Handke-Ergüden due to marriage. The petition was accompanied by an affidavit signed by Gabriele Handke-Ergüden using both her former name and present name. The petition fee under 37 CFR 1.17 will be charged to Deposit Account no. 13-3372.

DISCUSSION

The Manual of Patent Examining Procedure at § 605.04(c) requires in instances where an inventor has changed his or her name after the application has been filed to submit a petition under 37 CFR 1.182. The petition must include the appropriate petition fee and an affidavit signed with both names setting forth the procedure whereby the change of name was effected, or certified copy of the court order. The petition has been reviewed and is approved. The declaration submitted on 23 December 2003 is accepted.

CONCLUSION

The petition under 37 CFR 1.182 to change the inventor's name from Gabriele Handke to Gabriele Handke-Ergüden is **GRANTED**.

This application is being forwarded to United States/Elected Office for further processing in accordance with this decision. The 35 U.S.C. 371(c) date is **29 December 2003**.

Anthony Smith

Anthony Smith
Attorney-Advisor
Office of PCT Legal Administration
Tel: (703) 308-6314
Fax: (703) 308-6459

26 MAR 2004

UNITED STATES PATENT AND TRADEMARK OFFICE

COMMISSIONER FOR PATENTS
UNITED STATES PATENT AND TRADEMARK OFFICE
P.O. BOX 1450
ALEXANDRIA, VA 22313-1450
www.uspto.gov

RECEIVED
MAR 31 2004
OIPE/JCWS

STROOCK & STROOCK & LAVAN, LLP
180 MAIDEN LANE
NEW YORK, NY 10038-4982

In Re Application of MADISON et al. Application No.: 10/416,623 PCT No.: PCT/US01/46756 Int. Filing Date: 05 November 2001 Priority Date: 06 June 2001 Attorney Docket No.: 694231/0074 For: METHOD FOR CONTROLLING ACCESS TO DIGITAL CONTENT AND STREAMING MEDIA	DECISION ON PETITION UNDER 37 CFR 1.10(c)

This is a decision on applicant's "PETITION TO CORRECT FILING DATE AND REQUEST FOR CORRECTED NOTICE OF ACCEPTANCE OF APPLICATION UNDER 35 U.S.C. 371 AND 37 CFR 1.495 AND CORRECTED FILING RECEIPT" filed, via facsimile in the United States Patent and Trademark Office (USPTO) on 20 February 2004. Although applicant alleges that the petition was originally filed on 01 December 2003, the original petition is not located in the application file and no proof of its filing on 01 December 2003 was presented.

BACKGROUND

On 05 November 2001, applicant filed international application No. PCT/US01/46756, which claimed a priority date of 06 June 2001 and which designated the United States. Thereafter, before the expiration of the thirty month period, applicant filed a transmittal letter for entry into the national stage, the basic national stage filing fee and an executed declaration, which was accorded a filing date of 13 May 2003.

On 11 September 2003, the United States Designated/Elected Office (DO/EO/US) mailed a Notification of Acceptance of Application Under 35 U.S.C. 371 and 37 CFR 1.495 (Form PCT/DO/EO/903) indicating an international filing date of 05 November 2001 and 35 U.S.C. 371(c)(1), (c)(2) and (c)(4) date of 13 May 2003.

On 20 February 2004, applicant filed the present request with a copy of the Notification of Acceptance, certificate of mailing and the Customer Copy Express Mail label. Applicant urges that the Form 903 and filing receipt be corrected to indicate a filing date of 35 U.S.C. 371(c)(1), (c)(2) and (c)(4) filing date of 12 May 2003.

DISCUSSION

Applicant filed the present request, which included a copy of the Customer Copy of the "Express Mail" mailing label #EV086092412US and certificate of mailing. The Express Mailing label shows a "Date In" of "5/12/03" and bears a USPS date-stamp of "May 12 2003". The original Express Mail envelope is not located in the application file.

The evidence of record is sufficient to establish with reasonable certainty that the national stage application papers were deposited with the USPS as an "Express Mail" Mailing on 12 May 2003. The "Express Mail" number is the same number that appears on the certificate of mailing

found in the application file. The "Express Mail" certificate ties the national stage application papers and the "Express Mail" label together such that it is clear that the national stage application papers were deposited on 12 May 2003. Applicant requests a filing date under 35 U.S.C. 371(c)(1), (c)(2) and (c)(4) of 12 May 2003 be accorded application 10/416,623.

The actual filing date of the present application is considered to be the international filing date, 05 November 2001. The application file indicates that applicant completed the requirements set forth in 35 U.S.C. 371(c)(1), (c)(2) and (c)(4) on 12 May 2003. The Notification of Acceptance (FORM PCT/DO/EO/903) mailed on 11 September 2003 indicated the improper 35 U.S.C. 371(c) (1), (c)(2) and (c)(4) date and is vacated. (Note MPEP section 1893.03(b).)

CONCLUSION

Applicant's request that 35 U.S.C. 371(c)(1), (c)(2) and (c)(4) date of 12 May 2003 be accorded application 10/416,623 is **GRANTED**.

The Notification of Acceptance (Form PCT/DO/EO/903) mailed on 11 September 2003 is hereby **VACATED**.

This application is being forwarded the US Designated/Elected Office for issuance of a corrected Notification of Acceptance (FORM PCT/DO/EO/903) indicating a 35 U.S.C. 371(c)(1), (c)(2) and (c)(4) date of **12 May 2003** and a corrected filing receipt.

The application will then be forwarded to Art Unit 3624 for examination in due course.

Cynthia M. Kratz

Cynthia M. Kratz
Attorney Advisor
PCT Legal Office

Telephone: (703)306-5467

STROOCK

FACSIMILE

DATE February 20, 2004

TO	COMPANY NAME	FAX NO.	PHONE NO.
PCT Legal Administration Office	United States Patent and Trademark Office	1-703-308-6459	1-703-305-0045

TOTAL NO. OF PAGES 11

FROM James J. DeCarlo

SENDER'S FAX NO. 212-806-6006

SENDER'S PHONE NO. 212-806-5742

SENDER'S EMAIL JDECARLO@stroock.com

ROOM NO. 3860

ATTORNEY NO. 2620

CLIENT/MATTER NO. 694231/0074

RECEIVED
MAR 30 2004
OIPE/JCWS

MESSAGE

Re: Applicants: Justin Madison, et al.
Application No.: 10/416,623
Filed: May 12, 2003
Group Art Unit: 3624
For: METHOD FOR CONTROLLING ACCESS TO DIGITAL CONTENT AND STREAMING MEDIA
Docket No.: 694231/0074

Please find attached the Petition To Correct Filing Date and Request for Corrected Notice of Acceptance and supporting documents in the above referenced application. These forms were originally filed on December 1, 2003 via first class mail. As of date, we have not received a Decision or a Corrected Filing Receipt. Therefore, applicants

CONFIDENTIAL The information contained in this facsimile is privileged and confidential, and is intended only for the use of the individual named above and others who have been specially authorized to receive such. If the recipient is not the intended recipient, you are hereby notified that any dissemination, distribution or copying of this communication is strictly prohibited. If you have received this communication in error, or if any problems occur with this transmission, please notify us by telephone at 212-806-6102.

STROOCK & STROOCK & LAVAN LLP • NEW YORK • LOS ANGELES • MIAMI
180 MAIDEN LANE, NEW YORK, NY 10038-4982 TEL 212.806.5400 FAX 212.806.6006 WWW.STROOCK.COM

RECEIVED
20 FEB 2004
Legal Staff
International Division

STROOCK

FACSIMILE

PAGE 2

MESSAGE

are resubmitting these forms via fax as suggested during a telephone conversation with the PCT Help Desk earlier today.

CONFIDENTIAL

The information contained in this facsimile is privileged and confidential, and is intended only for the use of the individual named above and others who have been specially authorized to receive such. If the recipient is not the intended recipient, you are hereby notified that any dissemination, distribution or copying of this communication is strictly prohibited. If you have received this communication in error, or if any problems occur with this transmission, please notify us by telephone at 212-806-6102.

STROOCK & STROOCK & LAVAN LLP • NEW YORK • LOS ANGELES • MIAMI
180 MAIDEN LANE, NEW YORK, NY 10038-4982 TEL 212.806.5400 FAX 212.806.6006 WWW.STROOCK.COM

Docket No.
694231/0074
JJD/IGD/HDS

IN THE UNITED STATES PATENT AND TRADEMARK OFFICE

Applicants: Justin Madison et al. Group Art Unit: 3624

Application No.: 10/416,623 Examiner: TBA

Filed: May 12, 2003

For: METHOD FOR CONTROLLING ACCESS TO DIGITAL CONTENT AND STREAMING MEDIA

Date: December 1, 2003

CERTIFICATE OF MAILING
BY "FIRST CLASS MAIL" (37 C.F.R. § 1.8)

Mail Stop PCT
Commissioner for Patents
PO Box 1450
Alexandria, Virginia 22313-1450

Sir:

I hereby certify that the following correspondence:

Petition to Correct Filing Date and Request for Corrected Notice of Acceptance of Application Under 35 USC 371 and 37 CFR 1.495 and Corrected Filing Receipt (3 pgs); copy of Express Mail Label EV 086092412 US stamped May 12, 2003; copy of Notice of Acceptance of Application Under 35 USC 371 and 37 CFR 1.495 with corrections noted in red ink (2 pgs); copy of Filing Receipt with corrections noted in red ink (2 pgs) and return Postcard

is being deposited on December 1, 2003 with the United States Postal Service as first class mail in an envelope bearing sufficient postage thereon and addressed to:

Mail Stop PCT
Commissioner for Patents
PO Box 1450
Alexandria, Virginia 22313-1450.

Howard D. Shatz
(Typed Or Printed Name Of Person Mailing Correspondence)

(Signature Of Person Mailing Correspondence)

SSL-DOCS1 1404157v1

694231/0074
(JJD/IGD/HDS)

IN THE UNITED STATES PATENT AND TRADEMARK OFFICE

Applicants	:	Justin Madison, et. al.			
Application No.:		10/416,623	Art Unit No.	:	3624
Filed	:	May 12, 2003	Examiner	:	Not Yet Assigned
For	:	METHOD FOR CONTROLLING ACCESS TO DIGITAL CONTENT AND STREAMING MEDIA			

Date: December 1, 2003

Mail Stop PCT
Commissioner for Patents
PO Box 1450
Alexandria, VA 22313-1450

Attn: Office of Initial Patent Examination
Filing Receipt Corrections

PETITION TO CORRECT FILING DATE AND REQUEST FOR CORRECTED NOTICE OF ACCEPTANCE OF APPLICATION UNDER 35 USC 371 AND 37 CFR 1.495 AND CORRECTED FILING RECEIPT

Sir:

Applicants respectfully submit this communication pursuant to 37 CFR 1.10(c) requesting that the present application be accorded a filing date of May 12, 2003--the date of deposit of the application, as reflected on the "Express Mail" mailing label--and that such filing date be reflected on the (1) Notice of Acceptance of Application under 35 USC 371 and 37 CFR 1.495; and (2) Filing Receipt, both mailed by the Office on September 11, 2003.

Applicants' attorney filed the above-referenced application on May 12, 2003 by "Express Mail" in accordance with 37 CFR § 1.10. In accordance with 37 CFR 1.10(c), enclosed with this Petition is a true copy of the "Express Mail" mailing label showing May 12, 2003 as the "date-

in". Also, enclosed is a copy of the Transmittal Letter to the United States Designated/Elected Office (DO/EO/US) Concerning a Filing under 35 U.S.C. 371, having the number of the "Express Mail" mailing label, which was placed on the correspondence prior to the original mailing by "Express Mail", and the Certificate of Mailing by "Express Mail". As indicated on the Certificate of Mailing by "Express Mail" and return postcard, the requirements of 35 U.S.C. 371(c) (1) (i.e., copy of international application); (2) (i.e., fee) and (4) (i.e., declaration) were also filed on May 12, 2003 (which identifies the application as being mailed on May 12, 2003).

Accordingly, Applicants respectfully request:

(1) correction of the 371 date to May 12, 2003;

(2) with regard to Notice of Acceptance under 35 U.S.C. 371 and 37 C.F.R. 1.495 that the DATE OF RECEIPT OF 35 U.S.C. 371(c)(1), (c)(2) and (c)(4) REQUIREMENTS and DATE OF RECEIPT OF ALL 35 U.S.C. 371 REQUIREMENTS be changed from May 13, 2003 to the correct date of May 12, 2003, and a Corrected Notice of Acceptance of Application under 35 USC 371 and 37 CFR 1.495 be issued; and

(3) with regard to the Filing Receipt, that the FILING OR 371(c) DATE be changed from May 13, 2003 to the correct date of May 12, 2003, and a corrected Filing Receipt be issued. Copies of these documents are enclosed with the requested changes noted in red ink.

Additionally, Applicants respectfully submit that the Filing Receipt mailed September 11, 2003 for the above-referenced application contain errors in the "Domestic Priority date as claimed by applicant" section and request that this section should be corrected to read as follows:

Domestic Priority date as claimed by applicant

This application is a 371 of PCT/US01/46726 11/05/2001,

which claims the benefit of PCT/US01/18324 06/06/2001

Furthermore, no foreign priority should be claimed.

A copy of the Filing Receipt is enclosed with the requested changes noted in red ink.

Applicants respectfully request that the (1) Notice of Acceptance of Application under 35 USC 371 and 37 CFR 1.495; and (2) Filing Receipt be corrected to reflect the changes requested in this Petition and that a corrected version of each document be issued. No fee is deemed necessary in connection with the filing of this Communication. However, if any fee is due the amount of such fee may be charged to Deposit Account No. 19-4709.

Respectfully submitted,

James J. DeCarlo
Registration No. 36,120
Attorney for Applicants
STROOCK & STROOCK & LAVAN, LLP
180 Maiden Lane
New York, New York 10038-4982
(212) 806-5400

EV 0A6042472 US

EXPRESS MAIL
UNITED STATES POSTAL SERVICE

Customer Copy

Post Office To Addressee

ORIGIN (POSTAL USE ONLY)

DELIVERY (POSTAL USE ONLY)

FROM: (PLEASE PRINT)

STROOCK & STROOCK & LAVAN
180 MAIDEN LN
NEW YORK NY 10038-4925

694231/0074 AD/IGD

05/12/03

TO: (PLEASE PRINT)

Mail Stop PCT
Commissioner for Patents
PO Box 1450
Alexandria, VA 22313-1450

PRESS HARD.
You are making 3 copies.

FOR PICKUP OR TRACKING CALL 1-800-222-1811 www.usps.com

UNITED STATES PATENT AND TRADEMARK OFFICE

UNITED STATES DEPARTMENT OF COMMERCE
United States Patent and Trademark Office
Address: COMMISSIONER OF PATENTS AND TRADEMARKS
P.O. Box 1450
Alexandria, Virginia 22313-1450
www.uspto.gov

APPL NO.	FILING OR 371 (c) DATE	ART UNIT	FIL FEE REC'D	ATTY.DOCKET NO	DRAWINGS	TOT CLMS	IND CLMS
10/416,623	[redacted] 05/12/2003	3624	720	694231/0074	10	2	1

Ian DiBernardo
Stroock & Stroock & Lavan
180 Maiden Lane
New York, NY 10038

CONFIRMATION NO. 7560
FILING RECEIPT
OC000000010837441

Date Mailed: 09/11/2003

Receipt is acknowledged of this regular Patent Application. It will be considered in its order and you will be notified as to the results of the examination. Be sure to provide the U.S. APPLICATION NUMBER, FILING DATE, NAME OF APPLICANT, and TITLE OF INVENTION when inquiring about this application. Fees transmitted by check or draft are subject to collection. Please verify the accuracy of the data presented on this receipt. If an error is noted on this Filing Receipt, please write to the Office of Initial Patent Examination's Filing Receipt Corrections, facsimile number 703-746-9195. Please provide a copy of this Filing Receipt with the changes noted thereon. If you received a "Notice to File Missing Parts" for this application, please submit any corrections to this Filing Receipt with your reply to the Notice. When the USPTO processes the reply to the Notice, the USPTO will generate another Filing Receipt incorporating the requested corrections (if appropriate).

Applicant(s)

Justin Madison, Richardson, TX;
Anthony Rodiger, The Colony, TX;
Ajay Chintala, Addison, TX;
Alan S. Florschuetz, Allen, TX;

Domestic Priority data as claimed by applicant

This application is a 371 of PCT/US01/46726 11/05/2001, which claims benefit of PCT/US01/18324 06/06/2001

Foreign Applications

~~UNITED STATES OF AMERICA [illegible]~~

Projected Publication Date: To Be Determined - pending completion of Security Review

Non-Publication Request: No

Early Publication Request: No

Title

Method for controlling access to digital content and streaming media

Preliminary Class
705

LICENSE FOR FOREIGN FILING UNDER
Title 35, United States Code, Section 184
Title 37, Code of Federal Regulations, 5.11 & 5.15

GRANTED

The applicant has been granted a license under 35 U.S.C. 184, if the phrase "IF REQUIRED, FOREIGN FILING LICENSE GRANTED" followed by a date appears on this form. Such licenses are issued in all applications where the conditions for issuance of a license have been met, regardless of whether or not a license may be required as set forth in 37 CFR 5.15. The scope and limitations of this license are set forth in 37 CFR 5.15(a) unless an earlier license has been issued under 37 CFR 5.15(b). The license is subject to revocation upon written notification. The date indicated is the effective date of the license, unless an earlier license of similar scope has been granted under 37 CFR 5.13 or 5.14.

This license is to be retained by the licensee and may be used at any time on or after the effective date thereof unless it is revoked. This license is automatically transferred to any related applications(s) filed under 37 CFR 1.53(d). This license is not retroactive.

The grant of a license does not in any way lessen the responsibility of a licensee for the security of the subject matter as imposed by any Government contract or the provisions of existing laws relating to espionage and the national security or the export of technical data. Licensees should apprise themselves of current regulations especially with respect to certain countries, of other agencies, particularly the Office of Defense Trade Controls, Department of State (with respect to Arms, Munitions and Implements of War (22 CFR 121-128)); the Office of Export Administration, Department of Commerce (15 CFR 370.10 (j)); the Office of Foreign Assets Control, Department of Treasury (31 CFR Parts 500+) and the Department of Energy.

NOT GRANTED

No license under 35 U.S.C. 184 has been granted at this time, if the phrase "IF REQUIRED, FOREIGN FILING LICENSE GRANTED" DOES NOT appear on this form. Applicant may still petition for a license under 37 CFR 5.12, if a license is desired before the expiration of 6 months from the filing date of the application. If 6 months has lapsed from the filing date of this application and the licensee has not received any indication of a secrecy order under 35 U.S.C. 181, the licensee may foreign file the application pursuant to 37 CFR 5.15(b).

UNITED STATES PATENT AND TRADEMARK OFFICE

UNITED STATES DEPARTMENT OF COMMERCE
United States Patent and Trademark Office
Address: COMMISSIONER OF PATENTS AND TRADEMARKS
P.O. Box 1450
Alexandria, Virginia 22313-1450
www.uspto.gov

U.S. APPLICATION NUMBER NO.	FIRST NAMED APPLICANT	ATTY. DOCKET NO.
10/416,623	Justin Madison	694231/0074

INTERNATIONAL APPLICATION NO.
PCT/US01/46726

I.A. FILING DATE	PRIORITY DATE
11/05/2001	06/06/2001

Ian DiBernardo
Stroock & Stroock & Lavan
180 Maiden Lane
New York, NY 10038

CONFIRMATION NO. 7660
371 ACCEPTANCE LETTER
"OC000000010837442"

Date Mailed: 09/11/2003

NOTICE OF ACCEPTANCE OF APPLICATION UNDER 35 U.S.C 371 AND 37 CFR 1.495

The applicant is hereby advised that the United States Patent and Trademark Office in its capacity as a Designated / Elected Office (37 CFR 1.495), has determined that the above identified international application has met the requirements of 35 U.S.C. 371, and is ACCEPTED for national patentability examination in the United States Patent and Trademark Office.

The United States Application Number assigned to the application is shown above and the relevant dates are:

05/12/2003 ~~05/13/2003~~
DATE OF RECEIPT OF 35 U.S.C. 371(c)(1), (c)(2) and (c)(4) REQUIREMENTS

05/12/2003 ~~05/13/2003~~
DATE OF RECEIPT OF ALL 35 U.S.C. 371 REQUIREMENTS

A Filing Receipt (PTO-103X) will be issued for the present application in due course. **THE DATE APPEARING ON THE FILING RECEIPT AS THE " FILING DATE" IS THE DATE ON WHICH THE LAST OF THE 35 U.S.C. 371 REQUIREMENTS HAS BEEN RECEIVED IN THE OFFICE. THIS DATE IS SHOWN ABOVE.** *The filing date of the above identified application is the international filing date of the international application (Article 11(3) and 35 U.S.C. 363).* Once the Filing Receipt has been received, send all correspondence to the Group Art Unit designated thereon.

The following items have been received:

- Copy of the International Application filed on ~~05/13/2003~~ 05/12/2003
- Copy of the International Search Report filed on ~~05/13/2003~~ 05/12/2003
- Copy of IPE Report filed on ~~05/13/2003~~ 05/12/2003
- Information Disclosure Statements filed on ~~05/13/2003~~ 05/12/2003
- Oath or Declaration filed on ~~05/13/2003~~ 05/12/2003
- Request for Immediate Examination filed on ~~05/13/2003~~ 05/12/2003
- U.S. Basic National Fees filed on ~~05/13/2003~~ 05/12/2003
- Power of Attorney filed on ~~05/13/2003~~ 05/12/2003

Applicant is reminded that any communications to the United States Patent and Trademark Office must be mailed to the address given in the heading and include the U.S. application no. shown above (37 CFR 1.5)

PAULETTE R KIDWELL
Telephone: (703) 305-3656

PART 1 - ATTORNEY/APPLICANT COPY

FORM PCT/DO/EO/903 (371 Acceptance Notice)

****
*** RX REPORT ***
****

RECEPTION OK

TX/RX NO	6103
RECIPIENT ADDRESS	
DESTINATION ID	
ST. TIME	02/20 15:22
TIME USE	01'38
PGS.	11
RESULT	OK

22 JAN 2004

#7

UNITED STATES PATENT AND TRADEMARK OFFICE

COMMISSIONER FOR PATENTS
UNITED STATES PATENT AND TRADEMARK OFFICE
P.O. BOX 1450
ALEXANDRIA, VA 22313-1450
www.uspto.gov

STRIKER STRIKER AND STENBY
103 East Neck Road
Huntington, NY 11743

In re Application of	:	
CHIDICHIMO, Giuseppe *et al*	:	
U.S. Application No.: 10/416,635	:	
PCT No.: PCT/IT01/00578	:	**DECISION ON**
Int. Filing Date: 19 November 2001	:	**PETITION**
Priority Date: 17 November 2000	:	**UNDER 37 CFR 1.42**
Attorney Docket No.: 2631	:	
For: MIRROR WITH HIGHLY	:	
SELECTIVE REFLECTION BAND	:	

This is a decision on the declaration filed 10 December 2003 which has been treated as a petition under 37 CFR 1.42. No fee is required.

BACKGROUND

On 25 August 2003, a Notification of Missing Requirements Under 35 U.S.C. 371 in the United States Designated/Elected Office (DO/EO/US) (Form PCT/DO/EO/905) was mailed indicating that an oath or declaration in compliance with 37 CFR 1.497(a) and (b) and a surcharge fee of $65.00 pursuant to 37 CFR 1.492(e) was required. A two-month time limit was set for response with extensions of time available.

On 10 December 2003, applicants filed the instant response which included a declaration signed by three of the four joint inventors and by the legal representative of a deceased joint inventor and authorization to charge the surcharge fee of $65.00 and two-month extension fee of $210.00 to Deposit Account No. 19-4675.

DISCUSSION

37 CFR 1.42 *When the Inventor is Dead*, states, in part:

> In case of the death of the inventor, the legal representative (executor, administrator, etc.) of the deceased inventor may make the necessary oath or declaration, and apply for and obtain the patent.

In the instant response, applicants have furnished a declaration signed by three of the four joint inventors and by Galina Khokhlova as the "sole heir and legal representative" of a deceased joint inventor, Alexander Fedorovich Khokhlov.

A review of the declaration reveals that the residences, mailing addresses and citizenship of all the inventors, including the deceased inventor, are listed on the

declaration pursuant to 37 CFR 1.497(a)(3). In addition, the citizenship and residence and mailing address of the legal representative is recorded on the declaration pursuant to 37 CFR 1.497(b)(2). This declaration complies with the requirements of 37 CFR 1.497(a) and (b).

CONCLUSION

The papers filed under 37 CFR 1.42 are **ACCEPTED**.

Applicants have completed the requirements for acceptance under 35 U.S.C. 371(c). The application has an international filing date of 19 November 2001, under 35 U.S.C. 363, and a 35 U.S.C. 371 date of **10 December 2003**.

This application is being forwarded to the United States Designated/Elected Office for further processing in accordance with this decision.

James Thomson
Attorney Advisor
Office of PCT Legal Administration

Tel.: (703) 308-6457

UNITED STATES PATENT AND TRADEMARK OFFICE

UNITED STATES DEPARTMENT OF COMMERCE
United States Patent and Trademark Office
Address: COMMISSIONER FOR PATENTS
P.O. Box 1450
Alexandria, Virginia 22313-1450
www.uspto.gov

Richard L Mayer
Kenyon & Kenyon
One Broadway
New York, NY 10004

Mail Date: 04/21/2010

Applicant	: Matthias Heimermann	: DECISION ON REQUEST FOR
Patent Number	: 7595722	: RECALCULATION of PATENT
Issue Date	: 09/29/2009	: TERM ADJUSTMENT IN VIEW
Appliction No	: 10/416,639	: OF WYETH AND NOTICE OF INTENT TO
Filed	: 10/10/2003	: ISSUE CERTIFICATE OF CORRECTION
		:

The Request for Recalculation is **GRANTED** to the extent indicated.

The patent term adjustment has been determined to be **138** days. The USPTO will *sua sponte* issue a certificate of correction reflecting the amount of PTA days determined by the recalculation.

Prior to the issuance of the certificate of correction, the USPTO will afford patentee an opportunity to be heard and request reconsideration. Accordingly, patentee has **one month or thirty (30) days**, whichever is longer, to file a request for reconsideration of this patent term adjustment calculation. See 35 U.S.C. 154(b)(3)(B)(ii) and 37 CFR 1.322(a)(4). No extensions of time will be granted under 37 CFR 1.136.

Patentee should use document code PET.OP if electronically filing a request for reconsideration of this patent term adjustment calculation. The patentee must also include the information required by 37 CFR 1.705(b)(2) and the fee required by 37 CFR 1.18(e). If patentee does not file a timely request for reconsideration of this patent term adjustment calculation including the information required by 37 CFR 1.705(b)(2) and the fee required by 37 CFR 1.18(e), the USPTO will issue a certificate of correction reflecting the PTA determination noted above.

Patentee should be aware that in order to preserve the right to review in the United States District Court for the District of Columbia of the USPTO patent term adjustment determination, patentee must ensure that he or she also take the steps required under 35 U.S.C. 154(b)(4)(A) in a timely manner. Nothing in the request for recalculation should be construed as providing an alternative time frame for commencing a civil action under 35 U.S.C. 154(b)(4)(A).

Any questions concerning this decision should be directed to the Office of Patent Legal Administration at 571-272-7702.

UNITED STATES PATENT AND TRADEMARK OFFICE

UNITED STATES DEPARTMENT OF COMMERCE
United States Patent and Trademark Office
Address: COMMISSIONER FOR PATENTS
P.O. Box 1450
Alexandria, Virginia 22313-1450
www.uspto.gov

Richard L Mayer
Kenyon & Kenyon
One Broadway
New York, NY 10004

Mail Date: 05/18/2010

Applicant : Matthias Heimermann
Patent Number : 7595722
Issue Date : 09/29/2009
Application No : 10/416,639
Filed : 10/10/2003

: NOTICE CONCERNING IMPROPER
: CALCULATION OF PATENT TERM
: ADJUSTMENT BASED UPON USPTO
: IMPROPERLY MEASURING REDUCTION
: PERIOD UNDER 37 CFR 1.704(c)(10).

The United States Patent and Trademark Office (USPTO) discovered that in processing the recent recalculation decisions mailed in response to patentee's filed Request for Recalculation of Patent Term Adjustment in view of Wyeth, the USPTO improperly measured the reduction period for reductions under 37 CFR 1.704(c)(10). Pursuant to 37 CFR 1.704(c)(10), patentee's reduction begins on the date of filing the amendment under 37 CFR 1.312 ("1.312 amendment") or other related paper and ends on the date that the Office mails a response to the filing of the 1.312 amendment or other paper. It has been discovered that during the recalculation, the calculation failed to the limit the reduction to the mail date of the response to the 1.312 amendment or other paper. Accordingly, patentee's reductions were greater than warranted.

This notice **VACATES** the previous GRANTED request for recalculation and provides patentee with a revised GRANTED recalculation.

The patent term adjustment has been determined to be **170** days. The USPTO will *sua sponte* issue a certificate of correction reflecting the amount of patent term adjustment (PTA) days determined by the recalculation.

Prior to the issuance of the certificate of correction, the USPTO will afford patentee an opportunity to be heard and request reconsideration. Accordingly, patentee has **one month or thirty (30) days** from the mail date of this notice, whichever is longer, to file a request for reconsideration of this PTA calculation. See 35 U.S.C. § 154(b)(3)(B)(ii) and 37 CFR 1.322(a)(4).

Patentee should use document code PET.OP if electronically filing a request for reconsideration of this PTA calculation. The patentee must also include the information required by 37 CFR 1.705(b)(2), and the fee required by 37 CFR 1.18(e). If patentee does not file a timely request for reconsideration of this PTA calculation, including the information required by 37 CFR 1.705(b)(2) and the fee required by 37 CFR 1.18(e), the USPTO will issue a certificate of correction reflecting the PTA determination noted above.

Patentee should be aware that in order to preserve the right of review of the USPTO's PTA determination in the United States District Court for the District of Columbia, patentee must ensure that the steps required under 35 U.S.C. § 154 (b)(4) are taken in a timely manner. Nothing in the request for recalculation should be construed as providing an alternative time frame for commencing a civil action under 35 U.S.C. § 154(b)(4).

UNITED STATES PATENT AND TRADEMARK OFFICE

Commissioner for Patents
United States Patent and Trademark Office
P.O. Box 1450
Alexandria, VA 22313-1450
www.uspto.gov

COPY MAILED

SEP 18 2007

OFFICE OF PETITIONS

HAYES SOLOWAY P.C.
3450 E. SUNRISE DRIVE, SUITE 140
TUSCON AZ 85718

In re Application of	:
Phillipe Belleville et al	:
Application No. 10/416,646	: DECISION GRANTING PETITION
Filed: May 14, 2003	: UNDER 37 CFR 1.137(b)
Attorney Docket No. BREV 13929	:

This is a decision on the petition under 37 CFR 1.137(b), filed April 10, 2007, to revive the above-identified application.

The petition is **GRANTED**.

The petition satisfies the conditions for revival pursuant to the provisions of 37 CFR 1.137(b) in that (1) the reply in the form of an amendment; (2) the petition fee; and (3) the required statement of unintentional delay have been received. Accordingly, the reply to the Nonfinal Rejection of June 29, 2005, is accepted as having been unintentionally delayed.

Since the above application was filed after June 8, 1995, the terminal disclaimer filed with the petition on April 10, 2007 is unnecessary. The terminal disclaimer fee of $130 is being credited to deposit account no. 08-1391 as authorized.

Telephone inquiries concerning this decision should be directed to the undersigned at (571) 272-3208.

This matter is being referred to Technology Center AU 1712

Karen Creasy

Karen Creasy
Petitions Examiner
Office of Petitions

SPE RESPONSE FOR CERTIFICATE OF CORRECTION

Paper No.: X

DATE : **April 18, 2008**

TO SPE OF : ART UNIT **1794**

SUBJECT : Request for Certificate of Correction for Appl. No.: **10/416653** Patent No.: **7303813 B2**

A response is requested with respect to a request for a certificate of correction.

With respect to the change(s) requested to correct Office and/or Applicant's errors, should the patent read as shown in the certificate of correction attached herewith or the COCIN document(s), in IFW images for the above-identified patented application? No new matter should be introduced, nor should the scope or meaning of the claims be changed.

If the response is for an IFW, within **7** days, please complete and forward the response, to the employee (named below) via scanning into application images, using document code **COCX**.

DO NOT SENT TO ATTORNEY

If the response is for a paper file wrapper, please complete the response and forward the response with the paper file wrapper, to the employee (named below), within **7** days, to:

Certificates of Correction Branch (CofC)
South Tower - 9A22
Palm Location 7580

You can fax the Directors/SPE response to 571-270-9990

LAMONTE NEWSOME
Certificates of Correction Branch
703-308-9390 ext. 112

Thank You For Your Assistance

The request for issuing the above-identified correction(s) is hereby:
Note your decision on the appropriate box.

- ☒ **Approved** — **All** changes apply.
- ☐ **Approved in Part** — Specify below which changes **do not** apply.
- ☐ **Denied** — State the reasons for denial below.

Comments: _____

Jill Warden
SPE

1797
Art Unit

U.S. DEPARTMENT OF COMMERCE Patent and Trademark Office

UNITED STATES PATENT AND TRADEMARK OFFICE

Commissioner for Patents
United States Patent and Trademark Office
P.O. Box 1450
Alexandria, VA 22313-1450
www.uspto.gov

COLEMAN SUDOL SAPONE, P.C.
714 COLORADO AVENUE
BRIDGE PORT CT 06605-1601

COPY MAILED

APR 1 1 2005

OFFICE OF PETITIONS

In re Application of
Sichera, et al.
Application No. 10/416,661
Filed: May 14, 2003
Attorney Docket No. 37719-1812
For: MACHINE FOR PACKAGING ARTICLES, IN PARTICULAR CDS, DVDS, AND THE LIKE, INTO CONTAINERS

ON PETITION

This is a decision on the petition under 37 CFR 1.137(b), filed on December 10, 2004 to revive the above-identified application.

The above-identified application became abandoned for failure to reply in a timely manner to the May 21, 2004 non-final Office action which set an extendable three (3) month period for reply. No extensions of time having been obtained pursuant to 37 CFR 1.136(a) and no reply being received in the Office, this application became abandoned on August 22, 2004. The filing of the instant petition precedes the mailing of a Notice of Abandonment.

Applicants have submitted an amendment in reply to the May 21, 2004 non-final Office action, an acceptable statement of the unintentional nature of the delay in responding to the May 21, 2004 non-final Office action, and the petition fee.[1]

The petition is **GRANTED**.

After the mailing of this decision the application will be forwarded to Technology Center 3700 for consideration of the amendment filed on December 10, 2004.

Telephone inquiries pertaining to this decision may be directed to the undersigned at (571) 272-3230.

E. Shirene Willis
Senior Petitions Attorney
Office of Petitions

---

[1] Pursuant to petitioners' authorization, deposit account no. 04-0838 will be charged the required $750.00 petition fee.

UNITED STATES PATENT AND TRADEMARK OFFICE

Commissioner for Patents
United States Patent and Trademark Office
P.O. Box 1450
Alexandria, VA 22313-1450
www.uspto.gov

COLEMAN SUDOL SAPONE PC
714 COLORADO AVENUE
BRIDGEPORT, CT 06605-1601

COPY MAILED
SEP 15 2006
OFFICE OF PETITIONS

In re Application of	:	
Massimilliano Sichera et al	:	
Application No. 10/416,661	:	DECISION ON PETITION
Filed: May 14, 2003	:	
Attorney Docket No. 376/9-1812	:	

This is a decision on the petition under the unintentional provisions of 37 CFR 1.137(b), filed April 18, 2006, to revive the above-identified application.

The petition is **GRANTED**.

This application became abandoned for failure to timely pay the issue and publication fees on or before February 6, 2006, as required by the Notice of Allowance and Fee(s) Due, mailed November 6, 2005. Accordingly, the date of abandonment of this application is February 7, 2006. A Notice of Abandonment was mailed on April 14, 2006.

The petition satisfies the requirements of 37 CFR 1.137(b) in that petitioner has supplied (1) the reply in the form of payment of the issue fee of $700 and the publication fee of $300, (2) the petition fee of $750; and (3) a proper statement of unintentional delay. Accordingly, the submission of the issue and publication fees is accepted as having been unintentionally delayed.

Telephone inquiries concerning this decision should be directed to the undersigned at (571) 272-3218.

This application is being referred to Publishing Division for processing into a patent.

Frances Hicks
Petitions Examiner
Office of Petitions

UNITED STATES PATENT AND TRADEMARK OFFICE

Commissioner for Patents
United States Patent and Trademark Office
P.O. Box 1450
Alexandria, VA 22313-1450
www.uspto.gov

COPY MAILED
AUG 0 6 2007
OFFICE OF PETITIONS

LADAS & PARRY
26 WEST 61ST STREET
NEW YORK NY 10023

In re Patent No. 7,203,223 :
Issued: April 10, 2007 :
Application No. 10/416,682 : ON PETITION
Filed: September 10, 2003 :
Attorney Docket Number: U014602-6 :

This is a decision on the petition, filed May 14, 2007 to correct the assignee's name on the front of the Patent, which is being treated as a request under 37 CFR 3.81(b)[1]

The petition is **GRANTED**.

Petitioner states that the assignee is ELEKTROBIT TESTING OY, and was incorrectly identified on the Fee(s) Transmittal form PTOL-85(b) at the time of payment of the issue fee. Accordingly, petitioner requests that a certificate of correction be issued to reflect the correct name of the assignee on the front page of the Letters Patent.

Accordingly, petitioner requests that a certificate of correction be issued to reflect the correct assignee on the front page of the Letters Patent.

37 CFR 3.81(b), effective June 25, 2004, reads:

> *After payment of the issue fee:* Any request for issuance of an application in the name of the assignee submitted after the date of payment of the issue fee, and any request for a patent to be corrected to state the name of the assignee, must state that the assignment was submitted for recordation as set forth in § 3.11 before issuance of the patent, and must include a request for a certificate of correction under § 1.323 of this chapter (accompanied by the fee set forth in § 1.20(a) and the processing fee set forth in § 1.17(i) of this chapter.

The request is accompanied by a certificate of correction. Office assignment records reflect that ELEKTROBIT TESTING OY is the assignee of record. The petition fee and fee for the certificate of correction have been applied.

---

[1] *See* Official Gazette of June 22, 2004

Accordingly, as the request complies with the provisions of 37 CFR 3.81(b), it would be appropriate for a certificate of correction to issue.

Inquiries concerning this decision should be directed to the undersigned at (571) 272-3212. Any questions concerning the issuance of a certificate of correction should be directed to the Certificates of Correction Branch at (703) 305-8309.

This matter is being referred to the Certificates of Correction Branch for issuance of a certificate of correction.

Patricia Faison-Ball

Patricia Faison-Ball
Senior Petitions Attorney
Office of Petitions

UNITED STATES PATENT AND TRADEMARK OFFICE

Commissioner for Patents
United States Patent and Trademark Office
P.O. Box 1450
Alexandria, VA 22313-1450
www.uspto.gov

STANLEY H. KREMEN
4 LENAPE LANE
EAST BRUNSWICK, NJ 08816

COPY MAILED

SEP 30 2008

OFFICE OF PETITIONS

In re Application of	:	
Kremen, Stanley H.	:	
Application No. 10/416,689	:	ON PETITION
Filed: May 10, 2003	:	
Attorney Docket No. 51900-000-01-004	:	

This is a decision on the petition under the unintentional provisions of 37 CFR 1.137(b), filed July 23, 2008, to revive the above-identified application.

The petition is **DISMISSED**.

Any request for reconsideration of this decision must be submitted within TWO (2) MONTHS from the mail date of this decision. Extensions of time under 37 CFR 1.136(a) are permitted. The reconsideration request should include a cover letter entitled "Renewed Petition under 37 CFR 1.137(b)." This is **not** a final agency action within the meaning of 5 U.S.C. § 704.

The application became abandoned for failure to timely pay the issue and publication fees on or before October 26, 2006, as required by the Notice of Allowance and Fee(s) Due, mailed July 26, 2006, which set a statutory period for reply of three (3) months. The abandonment is also a result of failure to submit corrected formal drawings in a timely manner in reply to the notice regarding drawings, mailed September 14, 2006. Accordingly, this application became abandoned on October 27, 2006.

A grantable petition under 37 CFR 1.137(b) must be accompanied by: (1) the required reply, unless previously filed; (2) the petition fee as set forth in 37 CFR 1.17(m); (3) a statement that the entire delay in filing the required reply from the due date for the reply until the filing of a grantable petition pursuant to 37 CFR 1.137(b) was unintentional; and (4) any terminal disclaimer (and fee as set forth in 37 CFR 1.20(d)) required by 37 CFR 1.137(d). Where there is a question as to whether either the abandonment or the delay in filing a petition under 37 CFR 1.137 was unintentional, the Director may require additional information. See MPEP 711.03(c)(II)(C) and (D).

The instant petition lacks item (1). Although the Office recognizes that the petitioner submitted the payment of the issue fee of $720 and the publication fee of $300, the petitioner did not submit the required reply in the form of corrected formal drawings as specified by the notice regarding drawings mailed, September 14, 2006. Accordingly, this application cannot be revived until corrected formal drawings have been submitted.

Further correspondence with respect to this matter should be addressed as follows:

By Mail: Mail Stop PETITION
Commissioner for Patents
P. O. Box 1450
Alexandria, VA 22313-1450

By hand: U. S. Patent and Trademark Office
Customer Service Window, Mail Stop Petitions
Randolph Building
401 Dulany Street
Alexandria, VA 22314

The centralized facsimile number is **(571) 273-8300.**

Telephone inquiries concerning this decision should be directed to Alicia Kelley at (571) 272-6059.

/SDB/

Sherry D. Brinkley
Petitions Examiner
Office of Petitions

UNITED STATES PATENT AND TRADEMARK OFFICE

Commissioner for Patents
United States Patent and Trademark Office
P.O. Box 1450
Alexandria, VA 22313-1450
www.uspto.gov

STANLEY H. KREMEN
4 LENAPE LANE
EAST BRUNSWICK, NJ 08816

COPY MAILED
OCT 27 2008
OFFICE OF PETITIONS

In re Application of	:	
Stanley H. Kremen	:	
Application No. 10/416,689	:	DECISION ON PETITION
Filed: May 10, 2003	:	
Attorney Docket No. 51900-000-01-004	:	

This is a decision on the renewed petition under the unintentional provisions of 37 CFR 1.137(b), filed October 3, 2008, to revive the above-identified application.

The petition is **GRANTED**.

This application became abandoned for failure to timely pay the issue and publication fees on or before October 26, 2006, as required by the Notice of Allowance and Fee(s) Due mailed July 26, 2006 and to submit corrected formal drawings as required by the notice regarding drawings, mailed September 14, 2006. Accordingly, the application became abandoned on October 27, 2006. A Notice of Abandonment was mailed November 28, 2006.

The present petition satisfies the requirements of 37 CFR 1.137(b) in that petitioner has supplied (1) the reply in the form of payment of the issue fee of $720 and the publication fee of $300 and corrected formal drawings, (2) the petition fee of $770, and (3) an adequate statement of unintentional delay.

Telephone inquiries concerning this decision should be directed to Alicia Kelley at (571)272-6059.

This application is being referred to the Office of Data Management for processing into a patent.

/SDB/

Sherry D. Brinkley
Petitions Examiner
Office of Petitions

27 FEB 2004

#5

UNITED STATES PATENT AND TRADEMARK OFFICE

COMMISSIONER FOR PATENTS
UNITED STATES PATENT AND TRADEMARK OFFICE
P.O. BOX 1450
ALEXANDRIA, VA 22313-1450
www.uspto.gov

Stevens Davis Miller & Mosher LLP
1615 L Street, NW
Suite 850
Washington, DC 20036

In re Application of	:	
KORNFALT, Sven et al.	:	
Application No.: 10/416,700	:	DECISION ON
PCT No.: PCT/SE01/02506	:	
Int. Filing Date: 13 November 2001	:	PETITION
Priority Date: 15 November 2000	:	
Attorney Docket No.: TPP31487	:	UNDER 37 CFR 1.181
For: SKIRTING PROFILE	:	

This decision is in response to applicant's "Response to Notification of Missing Requirements," filed on 30 September 2003. It has been treated as a petition under 37 CFR 1.181. No petition fee is due.

BACKGROUND

On 13 November 2001, applicant filed international application PCT/SE01/02506 which claimed a priority date of 15 November 2000. A copy of the international application was communicated to the United States Patent and Trademark Office (USPTO) from the International Bureau on 23 May 2002. A demand for international preliminary examination was filed 12 June 2002, prior to the expiration of nineteen months from the priority date. The deadline for entry into the national stage in the United States was thirty months from the priority date, 15 May 2003.

On 13 May 2003, applicant filed a transmittal letter for entry into the national stage in the United States, accompanied by the basic national fee.

On 29 August 2003, the Office mailed Notification of Missing Requirements (Form PCT/DO/EO/905) indicating that an oath or declaration in compliance with 37 CFR 1.497(a)-(b) was required.

On 30 September 2003, applicant submitted the instant petition, accompanied by an executed declaration and a date-stamped postcard receipt.

DISCUSSION

A petition under 37 CFR 1.181 must be accompanied by copies of what is claimed to have been earlier submitted and evidence that those papers were submitted at an earlier point.

Applicant has submitted a copy of a postcard receipt identifying the instant application by title, inventor and docket number, stamped 07 July 2003 and listing a declaration. This is adequate evidence that the listed item was received by the Office on 07 July 2003. Applicant indicates that the enclosed declaration is a true copy of the 07 July 2003 submission and the statement is signed by someone registered to practice before the Office. The declaration is accepted as having been received on 07 July 2003.

The declaration submitted on 07 July 2003 satisfies the requirements of 37 CFR 1.497(a)-(b).

CONCLUSION

For the reasons set forth above, the petition under 37 CFR 1.181 is **GRANTED**.

The Notification of Missing Requirements (Form PCT/DO/EO/905) mailed 29 August 2003 is **VACATED**.

This application is being forwarded to the National Stage Processing Branch of the Office of PCT Operations for further processing in accordance with this decision, including the mailing of a Notification Of Acceptance (Form PCT/DO/EO/903) and filing receipt. The date under 35 U.S.C. §§371(c)(1), (c)(2) and (c)(4) date is 07 July 2003.

Erin M. Pender

Erin M. Pender
Attorney Advisor
PCT Legal Administration

Telephone: 703-305-0455
Facsimile: 703-308-6459

SPE RESPONSE FOR CERTIFICATE OF CORRECTION 10/416703

Paper No.: _____

DATE : 2-16-06

TO SPE OF : ART UNIT 2826

SUBJECT : Request for Certificate of Correction on Patent No.: 6831341

A response is requested with respect to the accompanying request for a certificate of correction.

Please complete this form and return with file, within **7** days to:

Palm location **7580, Certificates of Correction Branch – South Tower – 9A22**

If response is for an IFW, **return to employee (named below) via PUBSCofC Team in MADRAS.**

With respect to the change(s) requested, correcting Office and/or Applicant's errors, should the patent read as shown in the certificate of correction (COCIN)? No new matter should be introduced, nor should the scope or meaning of the claims be changed.

Check Claims

Thank You For Your Assistance

Certificates of Correction Branch

The request for issuing the above-identified correction(s) is hereby:

Note your decision on the appropriate box.

☒ **Approved** — All changes apply.

☐ **Approved in Part** — Specify below which changes **do not** apply.

☐ **Denied** — State the reasons for denial below.

Comments:

NATHAN J. FLYNN
SUPERVISORY PATENT EXAMINER
TECHNOLOGY CENTER 2800

SPE **Art Unit**

UNITED STATES PATENT AND TRADEMARK OFFICE

Commissioner for Patents
United States Patent and Trademark Office
P.O. Box 1450
Alexandria, VA 22313-1450
www.uspto.gov

STAAS & HALSEY LLP
SUITE 700
1201 NEW YORK AVENUE, N.W.
WASHINGTON, DC 20005

COPY MAILED
DEC 0 1 2006
OFFICE OF PETITIONS

In re Application of	:	
Imai et al.	:	
Application No. 10/416714	:	
Filing or 371(c) Date: 05/14/2003	:	ON PETITION
Attorney Docket Number:	:	
1582.1012	:	

This is a decision on the "Letter to Withdraw Petition", filed July 12, 2006, requesting withdrawal of the "Petition Under 37 CFR § 1.182 for Duplicate Copy of Letters Patent", filed July 5, 2006, and requesting a refund of the petition fee. The petition is properly treated under 37 C.F.R. 1.181 (no fee).

This Petition is hereby **granted**.

A refund of the petition fee has been credited to deposit account 19-3935 as authorized in the petition.

Telephone inquiries concerning this matter should be directed to the undersigned at (571) 272-3232.

Derek L. Woods
Attorney
Office of Petitions

UNITED STATES PATENT AND TRADEMARK OFFICE

COMMISSIONER FOR PATENTS
UNITED STATES PATENT AND TRADEMARK OFFICE
P.O. BOX 1450
ALEXANDRIA, VA 22313-1450
www.uspto.gov

VOLPE AND KOENIG, P.C.
UNITED PLAZA, SUITE 1600
30 SOUTH 17TH STREET
PHILADELPHIA PA 19103

COPY MAILED

NOV 29 2005

OFFICE OF PETITIONS

Applicant: Olbricht et al.
Appl. No.: 10/416,763
International Filing Date: November 16, 2001
U.S. Patent No.: 6,944,379
Issue Date: September 13, 2005
Title: METHOD FOR TRANSFERRING A LARGE NUMBER OF FIBER ENDS INTO A SPECIFIED POSITION
Attorney Docket No.: SCT-PT014
Pub. No.: US 2004/0126070 A1
Pub. Date: July 1, 2004

This is in response to the "Request for A Corrected Or Revised Patent Application Publication under 37 CFR 1.221(b)," which was received on September 2, 2004, for the above-identified application.

The request is DISMISSED as moot.

37 CFR 1.221(b) is applicable "only when the Office makes a material mistake which is apparent from Office records." A material mistake must affect the public's ability to appreciate the technical disclosure of the patent application publication, to determine the scope of the patent application publication, or to determine the scope of the provisional rights that an applicant may seek to enforce upon issuance of a patent.[1]

Since the application has already issued as U.S. Patent No. 6,944,379 on September 13, 2005, the request is deemed moot.

Inquiries relating to this matter may be directed to Mark Polutta at (571) 272-7709.

Mark O. Polutta
Office of Patent Legal Administration
Office of the Deputy Commissioner
for Patent Examination Policy

---

[1] Changes to Implement Eighteen-Month Publication of Patent Applications, 65 FR 57023, 57038 (Sept. 20, 2000), 1239 Off. Gaz. Pat. Office Notices 63, 75 (Oct. 10, 2000) (final rule).

UNITED STATES PATENT AND TRADEMARK OFFICE

Commissioner for Patents
United States Patent and Trademark Office
P.O. Box 1450
Alexandria, VA 22313-1450
www.uspto.gov

COPY MAILED

APR 29 2008

OFFICE OF PETITIONS

EDWARDS ANGELL PALMER & DODGE LLP
P.O. Box 55874
Boston, MA 02205

In re Application of	:	
Peter Anthony Farrar, et al	:	
Application No. 10/416,767	:	DECISION ON PETITION
Filed: November 7, 2003	:	
Attorney Docket No. CPG 03-27 DB	:	

This is a decision on the petition under the unintentional provisions of 37 CFR 1.137(b), filed November 9, 2007, to revive the above-identified application.

The petition is **GRANTED**.

The application became abandoned for failure to reply in a timely manner to the non-final Office action mailed, April 16, 2007, which set a shortened statutory period for reply of three (3) months. No extensions of time under the provisions of 37 CFR 1.136(a) were obtained. Accordingly, the application became abandoned on July 17, 2007.

The petition satisfies the requirements of 37 CFR 1.137(b) in that petitioner has supplied (1) the reply in the form of an amendment, (2) the petition fee of $1540.00, and (3) a proper statement of unintentional delay.

Telephone inquiries concerning this decision should be directed to Thurman K. Page at (571)272-0602.

This application is being referred to Technology Center Art Unit 3728 for appropriate action by the Examiner in the normal course of business on the reply received

Thurman K. Page

Thurman K. Page
Petitions Examiner
Office of Petitions

12 DEC 2003

#4

UNITED STATES PATENT AND TRADEMARK OFFICE

COMMISSIONER FOR PATENTS
UNITED STATES PATENT AND TRADEMARK OFFICE
P.O. BOX 1450
ALEXANDRIA, VA 22313-1450
www.uspto.gov

Philippe Nobileau
2 avenue Fernand Martin
Villefranche sur mer
France 06230

In re Application of:	:	
NOBILEAU, Philippe	:	
U.S. Application No.: 10/416,772	:	DECISION ON PETITION
PCT No.: PCT/FR01/03099	:	
International Filing Date: 08 October 2001	:	
Priority Date: 06 October 2000	:	
Attorney's Docket No.: None	:	
For: HERBAL COMPOSITIONS FOR ITCHY OR INFECTED SKIN	:	

This application is before the Office of PCT Legal Administration. This decision is in response to applicant's unsigned communication entitled "Petition for revival under 37 CFR 1.181 - Request for withdrawal of termination of proceeding concerning entry into national phase concerning PCT application mentioned above" filed in the United States Patent and Trademark Office (USPTO) on 26 August 2003.

BACKGROUND

On 08 October 2001, applicant filed international application PCT/FR01/03099 which claimed a priority date of 06 October 2000 and which designated the United States. On 11 April 2002, a copy of the international application was communicated to the United States Patent and Trademark Office ("USPTO") by the International Bureau ("IB"). The deadline for payment of the basic national fee was thirty months from the priority date, i.e., 06 April 2003.

On 06 April 2003, applicant allegedly submitted a Credit Card Payment Form (PTO-2038) to the USPTO requesting to charge the basic national fee of $450. The credit card payment was declined by the credit card company. Subsequently, a second Credit Card Payment Form (PTO-2038) was submitted to the USPTO on 25 April 2003.

On 15 May 2003, applicant filed a transmittal letter for entry into the national stage in the United States which was accompanied by, *inter alia*,: the basic national fee; a translation of the international application; and a declaration of inventor. The national stage papers were filed via first class mail, along with a certificate of first class mailing indicating a mail date of 07 April 2003. When the national stage papers are filed via first class mail, the date of receipt is the filing date, in this case 15 May 2003. Additionally, applicant requested, via facsimile, to enter the national stage in the United States on 06 April 2003.

On 24 June 2003, the United States Designated/Elected Office (DO/EO/US) mailed a Notice of Termination of Proceedings under 37 CFR 1.53(e). The Office should have mailed a NOTIFICATION OF ABANDONMENT UNDER 35 U.S.C. 371 (Form PCT/DO/EO/909) indicating that the application was abandoned for failure to provide the U.S. Basic National Fee for a small entity by 30 months from the priority date.

On 26 August 2003, applicant submitted, via facsimile, "Petition for Revival under 37 CFR 1.181 Request for withdrawal of termination of proceeding concerning entry into national phase concerning PCT application mentioned above."

DISCUSSION

A review of the application file reveals that the national stage papers are date stamped "Rec'd. PCT/PTO 15 MAY 2003." No evidence of receipt of the national stage papers by the USPTO on or before 06 April 2003 has been located in the application file. Therefore, the above-identified application was **ABANDONED** on 07 April 2003 for failure to pay the basic national fee 30 month from the priority date for international application PCT/FR01/03099.

Additionally, applicant allegedly submitted, via facsimile, a request for entry into the national stage in the United States under 35 U.S.C. 371. Any facsimile transmission received in the United States Designated/Elected Office (DO/EO/US) cannot be utilized for the purpose of establishing a filing date for a national stage application. (See 37 CFR 1.8(a)(2)(i)(F)). Additionally, according to applicant "at the time we sent forms PTO-1390, PTO/SB/01, and the credit card payment form, our credit card number changed. That is the reason, it was not accepted. . ."

Recommendation

Applicants may wish to consider filing a petition to the Commissioner under 37 CFR 1.137(a) or (b) requesting that the application be revived. Any petition filed under 37 CFR 1.137(a) and/or a petition under 37 CFR 1.137(b) requesting that the application be revived must meet the criteria indicated in the recent revision of 37 CFR 1.137. This recommendation to file a petition under 37 CFR 1.137(a) or (b) should <u>not</u> be construed as an indication as to whether or not any such petition(s) will be favorably considered.

CONCLUSION

Applicant's Petition to Withdraw the Holding of Abandonment under 37 CFR 1.181 is **<u>DISMISSED</u>** without prejudice.

Applicant has **TWO (2) MONTHS** from the mail date of this decision to file a response. Such response should be entitled "Renewed Petition under 37 CFR 1.181" or "Petition For Revival Under 37 CFR 1.137" and it must include payment of the appropriate petition fee.

Any further correspondence with respect to this matter should be addressed to the Mail Stop PCT, Commissioner for Patents, Office of PCT Legal Administration, P.O. Box 1450, Alexandria, Virginia 22313-1450, with the contents of the letter marked to the attention of the Office of PCT Legal Administration.

Anthony Smith
Attorney-Advisor
Office of PCT Legal Administration
Tel.: 703-308-6314
Facsimile: 703-308-6459

0 8 JAN 2004

#6

UNITED STATES PATENT AND TRADEMARK OFFICE

COMMISSIONER FOR PATENTS
UNITED STATES PATENT AND TRADEMARK OFFICE
P.O. BOX 1450
ALEXANDRIA, VA 22313-1450
www.uspto.gov

Philippe Nobileau
2 avenue Fernand Martin
Villefranche sur mer
France 06230

In re Application of:	:	
NOBILEAU, Philippe	:	
U.S. Application No.: 10/416,772	:	DECISION ON PETITION
PCT No.: PCT/FR01/03099	:	
International Filing Date: 08 October 2001	:	
Priority Date: 06 October 2000	:	
Attorney's Docket No.: None	:	
For: METHOD AND SYSTEM FOR INCREASING PIPE RESISTANCE TO EXTERNAL PRESSURE	:	

The petition to revive under 37 CFR 1.137(b) filed 06 January 2004 in the above-captioned application is hereby GRANTED as follows:

Applicant's statement that "the entire delay in filing the required reply from the due date for the reply until the filing of a grantable petition under 37 CFR 1.137(b) was unintentional" meets the requirements of 37 CFR 1.137(b)(3).

A review of the application file reveals that applicant has submitted the basic national fee of $450 and the requirements of 37 CFR 1.137(b) have been satisfied. Therefore, the request to revive the application abandoned under 35 U.S.C. 371(d) is granted as to the National stage in the United States of America.

This application is being returned to the United States Designated/Elected Office for processing in accordance with this decision.

Anthony Smith

Anthony Smith
Attorney-Advisor
Office of PCT Legal Administration
Tel.: 703-308-6314
Facsimile: 703-308-6459

12 DEC 2003

UNITED STATES PATENT AND TRADEMARK OFFICE

COMMISSIONER FOR PATENTS
UNITED STATES PATENT AND TRADEMARK OFFICE
P.O. BOX 1450
ALEXANDRIA, VA 22313-1450
www.uspto.gov

Barbara Brownback
1911 Lauderdale Avenue
Houston, Texas 77030

In re Application of:	:	
NOBILEAU, Philippe	:	
U.S. Application No.: 10/416,773	:	DECISION ON PETITION
PCT No.: PCT/FR01/03091	:	
International Filing Date: 08 October 2001	:	
Priority Date: 06 October 2000	:	
Attorney's Docket No.: None	:	
For: METHOD AND SYSTEM OF CASING A WELL IN SINGLE DIAMETER	:	

This application is before the Office of PCT Legal Administration. This decision is in response to applicant's unsigned communication entitled "Petition for revival under 37 CFR 1.181 - Request for withdrawal of termination of proceeding concerning entry into national phase concerning PCT application mentioned above" filed in the United States Patent and Trademark Office (USPTO) on 26 August 2003.

BACKGROUND

On 08 October 2001, applicant filed international application PCT/FR01/03099 which claimed a priority date of 06 October 2000 and which designated the United States. On 11 April 2002, a copy of the international application was communicated to the United States Patent And Trademark Office ("USPTO") by the International Bureau ("IB"). The deadline for payment of the basic national fee was thirty months from the priority date, i.e., 06 April 2003.

On 06 April 2003, applicant allegedly submitted a Credit Card Payment Form (PTO-2038) to the USPTO requesting to charge the basic national fee of $450. The credit card payment was declined by the credit card company. Subsequently, a second Credit Card Payment Form (PTO-2038) was submitted to the USPTO on 25 April 2003.

On 15 May 2003, applicant filed a transmittal letter for entry into the national stage in the United States which was accompanied by, *inter alia*,: the basic national fee; a translation of the international application; and a declaration of inventor. The national stage papers were filed via first class mail, along with a certificate of first class mailing indicating a mail date of 07 April 2003. When the national stage papers are filed via first class mail, the date of receipt is the filing date, in this case 15 May 2003. Additionally, applicant requested, via facsimile, to enter the national stage in the United States on 06 April 2003.

On 24 June 2003, the United States Designated/Elected Office (DO/EO/US) mailed a NOTIFICATION OF ABANDONMENT UNDER 35 U.S.C. 371 (Form PCT/DO/EO/909) indicating that the application was abandoned for failure to provide the full U.S. Basic National Fee by 30 months from the priority date.

On 26 August 2003, applicant submitted, via facsimile, "Petition for Revival under 37 CFR 1.181 Request for withdrawal of termination of proceeding concerning entry into national phase concerning PCT application mentioned above."

DISCUSSION

A review of the application file reveals that the national stage papers are date stamped "Rec'd. PCT/PTO 15 MAY 2003." No evidence of receipt of the national stage papers by the USPTO on or before 06 April 2003 has been located in the application file. Therefore, the above-identified application was **ABANDONED** on 07 April 2003 for failure to pay the basic national fee 30 month from the priority date for international application PCT/FR01/03099.

Additionally, applicant allegedly submitted, via facsimile, a request for entry into the national stage in the United States under 35 U.S.C. 371. Any facsimile transmission received in the United States Designated/Elected Office (DO/EO/US) cannot be utilized for the purpose of establishing a filing date for a national stage application. (See 37 CFR 1.8(a)(2)(i)(F)). Additionally, according to applicant "at the time we sent forms PTO-1390, PTO/SB/01, and the credit card payment form, our credit card number changed. That is the reason, it was not accepted. . ."

Recommendation

Applicants may wish to consider filing a petition to the Commissioner under 37 CFR 1.137(a) or (b) requesting that the application be revived. Any petition filed under 37 CFR 1.137(a) and/or a petition under 37 CFR 1.137(b) requesting that the application be revived must meet the criteria indicated in the recent revision of 37 CFR 1.137. This recommendation to file a petition under 37 CFR 1.137(a) or (b) should not be construed as an indication as to whether or not any such petition(s) will be favorably considered.

CONCLUSION

Applicant's Petition to Withdraw the Holding of Abandonment under 37 CFR 1.181 is **DISMISSED** without prejudice.

Applicant has **TWO (2) MONTHS** from the mail date of this decision to file a response. Such response should be entitled "Renewed Petition under 37 CFR 1.181" or "Petition For Revival Under 37 CFR 1.137" and it must include payment of the appropriate petition fee.

Any further correspondence with respect to this matter should be addressed to the Mail Stop PCT, Commissioner for Patents, Office of PCT Legal Administration, P.O. Box 1450, Alexandria, Virginia 22313-1450, with the contents of the letter marked to the attention of the Office of PCT Legal Administration.

Anthony Smith

Anthony Smith
Attorney-Advisor
Office of PCT Legal Administration
Tel.: 703-308-6314
Facsimile: 703-308-6459

cc: Philippe Nobileau
2 avenue Fernand Martin
Villefranche sur mer
France 06230

0 8 JAN 2004

#6

UNITED STATES PATENT AND TRADEMARK OFFICE

COMMISSIONER FOR PATENTS
UNITED STATES PATENT AND TRADEMARK OFFICE
P.O. BOX 1450
ALEXANDRIA, VA 22313-1450
www.uspto.gov

Barbara Brownback
1911 Lauderdale Avenue
Houston, Texas 77030

In re Application of:	:	
NOBILEAU, Philippe	:	
U.S. Application No.: 10/416,773	:	DECISION ON PETITION
PCT No.: PCT/FR01/03091	:	
International Filing Date: 08 October 2001	:	
Priority Date: 06 October 2000	:	
Attorney's Docket No.: None	:	
For: METHOD AND SYSTEM OF CASING A WELL IN SINGLE DIAMETER	:	

The petition to revive under 37 CFR 1.137(b) filed 06 January 2004 in the above-captioned application is hereby GRANTED as follows:

Applicant's statement that "the entire delay in filing the required reply from the due date for the reply until the filing of a grantable petition under 37 CFR 1.137(b) was unintentional" meets the requirements of 37 CFR 1.137(b)(3).

A review of the application file reveals that applicant has submitted the basic national fee of $450 and the requirements of 37 CFR 1.137(b) have been satisfied. Therefore, the request to revive the application abandoned under 35 U.S.C. 371(d) is granted as to the National stage in the United States of America.

This application is being returned to the United States Designated/Elected Office for processing in accordance with this decision.

Anthony Smith

Anthony Smith
Attorney-Advisor
Office of PCT Legal Administration
Tel.: 703-308-6314
Facsimile: 703-308-6459

cc: Philippe Nobileau
2 avenue Fernand Martin
Villefranche sur mer
France 06230

UNITED STATES PATENT AND TRADEMARK OFFICE

Commissioner for Patents
United States Patent and Trademark Office
P.O. Box 1450
Alexandria, VA 22313-1450
www.uspto.gov

PHILIPPE NOBILEAU
2 AVENUE FERNAND MARTIN
VILLEFRANCHE SUR MER 06230 FR FRANCE

COPY MAILED
JUL 10 2008
OFFICE OF PETITIONS

In re Application of	:	
Philippe NOBILEAU	:	
Application No. 10/416,773	:	DECISION ON PETITION
Filed: July 06, 2005	:	
Attorney Docket No.	:	

This is a decision on the petition under the unintentional provisions of 37 CFR 1.137(b), filed May 29, 2008, to revive the above-identified application.

The petition is **DISMISSED**.

This application became abandoned for failure to timely pay the issue and publication fees on or before April 03, 2008, as required by the Notice of Allowance and Fee(s) Due, mailed January 03, 2008, which set a statutory period for reply of three (3) months. Accordingly, the application became abandoned on April 04, 2008.

A grantable petition under 37 CFR 1.137(b) must be accompanied by: (1) the required reply, unless previously filed; (2) the petition fee as set forth in 37 CFR 1.17(m); (3) a statement that the entire delay in filing the required reply from the due date for the reply until the filing of a grantable petition pursuant to 37 CFR 1.137(b) was unintentional; and (4) any terminal disclaimer (and fee as set forth in 37 CFR 1.20(d)) required by 37 CFR 1.137(d). Where there is a question as to whether either the abandonment or the delay in filing a petition under 37 CFR 1.137 was unintentional, the Director may require additional information. See MPEP 711.03(c)(II)(C) and (D). The instant petition lacks item **(2)** above.

The petition was not accompanied by the required petition fee of $770.00. A review of the Office records indicates that $750.00 was submitted; however there is a fee deficiency of $20.00. Any fee amount paid on or after September 30, 2007 must be paid as shown in the revised fee schedule. No consideration on the merits can be given that petition until the required fees are received.

Further correspondence with respect to this matter should be addressed as follows:

By Mail: Mail Stop PETITION
Commissioner for Patents
P. O. Box 1450
Alexandria, VA 22313-1450

By hand: U.S. Patent and Trademark Office
Customer Service Window, Mail Stop Petitions
Randolph Building
401 Dulany Street
Alexandria, VA 22314

The centralized facsimile number is **(571) 273-8300.**

Telephone inquiries concerning this decision should be directed to Michelle R. Eason at (571) 272-4231.

Michelle R. Eason
Paralegal Specialist
Office of Petitions

UNITED STATES PATENT AND TRADEMARK OFFICE

Commissioner for Patents
United States Patent and Trademark Office
P.O. Box 1450
Alexandria, VA 22313-1450
www.uspto.gov

PHILIPPE NOBILEAU
2 AVENUE FERNAND MARTIN
VILLEFRANCHE SUR MER 06230 FR FRANCE

RECEIVED

DEC 22 2008

OFFICE OF PETITIONS

In re Application of	:	
Philippe NOBILEAU	:	
Application No. 10/416,773	:	DECISION ON PETITION
Filed: July 06, 2005	:	
Attorney Docket No.	:	

This is a decision on the renewed petition under the unintentional provisions of 37 CFR 1.137(b), filed August 06, 2008, to revive the above-identified application.

The petition is **GRANTED**.

This application became abandoned for failure to timely pay the issue and publication fees on or before April 03, 2008, as required by the Notice of Allowance and Fee(s) Due, mailed January 03, 2008, which set a statutory period for reply of three (3) months. Accordingly, the application became abandoned on April 04, 2008.

The petition satisfies the requirements of 37 CFR 1.137(b) in that petitioner has supplied (1) the reply in the form of payment of the issue fee of $720.00 and publication fee of $300.00; (2) the petition fee of $770.00; and (3) a proper statement of unintentional delay. Accordingly, the issue fee payment is accepted as being unintentionally delayed.

Telephone inquiries concerning this decision should be directed to the undersigned at (571) 272-4231.

This application is being referred to Office of Data Management.

Michelle R. Eason
Paralegal Specialist
Office of Petitions

UNITED STATES PATENT AND TRADEMARK OFFICE

UNITED STATES DEPARTMENT OF COMMERCE
United States Patent and Trademark Office
Address: COMMISSIONER FOR PATENTS
P.O. Box 1450
Alexandria, Virginia 22313-1450
www.uspto.gov

MICHAEL BEST & FRIEDRICH LLP
100 E WISCONSIN AVENUE
Suite 3300
MILWAUKEE, WI 53202

Mail Date: 04/21/2010

Applicant	: Simon Michael West	: DECISION ON REQUEST FOR
Patent Number	: 7648710	: RECALCULATION of PATENT
Issue Date	: 01/19/2010	: TERM ADJUSTMENT IN VIEW
Appliction No	: 10/416,775	: OF WYETH AND NOTICE OF INTENT TO
Filed	: 12/23/2003	: ISSUE CERTIFICATE OF CORRECTION
		:

The Request for Recalculation is **GRANTED** to the extent indicated.

The patent term adjustment has been determined to be **518** days. The USPTO will *sua sponte* issue a certificate of correction reflecting the amount of PTA days determined by the recalculation.

Prior to the issuance of the certificate of correction, the USPTO will afford patentee an opportunity to be heard and request reconsideration. Accordingly, patentee has **one month or thirty (30) days**, whichever is longer, to file a request for reconsideration of this patent term adjustment calculation. See 35 U.S.C. 154(b)(3)(B)(ii) and 37 CFR 1.322(a)(4). No extensions of time will be granted under 37 CFR 1.136.

Patentee should use document code PET.OP if electronically filing a request for reconsideration of this patent term adjustment calculation. The patentee must also include the information required by 37 CFR 1.705(b)(2) and the fee required by 37 CFR 1.18(e). If patentee does not file a timely request for reconsideration of this patent term adjustment calculation including the information required by 37 CFR 1.705(b)(2) and the fee required by 37 CFR 1.18(e), the USPTO will issue a certificate of correction reflecting the PTA determination noted above.

Patentee should be aware that in order to preserve the right to review in the United States District Court for the District of Columbia of the USPTO patent term adjustment determination, patentee must ensure that he or she also take the steps required under 35 U.S.C. 154(b)(4)(A) in a timely manner. Nothing in the request for recalculation should be construed as providing an alternative time frame for commencing a civil action under 35 U.S.C. 154(b)(4)(A).

Any questions concerning this decision should be directed to the Office of Patent Legal Administration at 571-272-7702.

30 APR 2004

#9

UNITED STATES PATENT AND TRADEMARK OFFICE

COMMISSIONER FOR PATENTS
UNITED STATES PATENT AND TRADEMARK OFFICE
P.O. BOX 1450
ALEXANDRIA, VA 22313-1450
www.uspto.gov

Norman Oblon
Oblon, Spivak, McClelland, Maier & Neustadt
1940 Duke Street
Alexandria, Virginia 22314

In re Application of
THURSTON (deceased) :
Application No.: 10/416,792 :
PCT No.: PCT/GB01/04992 : DECISION ON PETITION
Int. Filing Date: 12 November 2001 : UNDER 37 CFR 1.47(b)
Priority Date: 15 November 2000 :
Attorney Docket No.: 237230US0PCT :
For: DETERMINATION OF EFFECTIVE : COMPOSITION OF A MIXTURE OF HYDROCARBON GASES

This decision is in response to applicant's "Petition under 37 CFR 1.47(b)" filed 19 March 2004 to accept the application without the signature of the legal representative (Loraine Thurston) of the deceased inventor, Robert Richard Thurston. Additionally, the declaration submitted on 19 March 2004 will be considered pursuant to 37 CFR 1.42.

BACKGROUND

On 12 November 2001, applicant filed international application PCT/GB01/04992 which claimed a priority date of 15 November 2000. A Demand was filed with the International Preliminary Examination Authority prior to the 19th month from the earliest claimed priority date. Accordingly, the thirty-month time period for submitting the requisite basic national fee in the United States of America was to expire 30 months from the priority date, 15 May 2003.

On 15 May 2003, applicant filed a transmittal letter for entry into the national stage in the United States, which was accompanied by the requisite basic national fee as required by 35 U.S.C. 371(c)(1); a copy of international application; and a preliminary amendment.

On 19 August 2003, the United Stated Designated/Elected Office mailed a Notification of Missing Requirements under 35 U.S.C. 371 (Form PCT/DO/EO/905) indicating that an oath or declaration in compliance with 37 CFR 1.497 must be filed. The notification set a two-month time limit in which to respond.

On 19 March 2004, applicant filed the present petition and a four-month extension of time.

DISCUSSION

Section 409.03(c) of the Manual of Patent Examining Procedure (MPEP) states, in part:

> "37 CFR 1.47 should not be considered an alternative to 37 CFR 1.42 or 35 U.S.C. 117 since the language "cannot be found or reached after diligent effort" has no reasonable application to a deceased inventor. In re Application Papers Filed September 10, 1954, 108 USPQ 340 (Comm'r Pat. 1955). See 37 CFR 1.42 and MPEP § 409.01. However, 37 CFR 1.47 does apply where a known legal representative of a deceased inventor cannot be found or reached after diligent effort, or refuses to make application. In such cases, the last known address of the legal representative must be given (see MPEP § 409.03(e))."

A petition under 37 CFR 1.47(b) must be accompanied by: (1) the requisite petition fee under 37 CFR 1.17(i); (2) factual proof that the inventor refuses to execute the application or cannot be reached after diligent effort; (3) a statement of the last known address of the nonsigning inventor; (4) an oath or declaration executed by the 37 CFR 1.47(b) applicant on behalf of and as agent for the nonsigning inventor; (5) proof of proprietary interest in the application; and (6) a showing that such action is necessary to preserve the rights of the parties or to prevent irreparable damages. The 37 CFR 1.47(b) applicant has satisfied the requirements of item (1),(2),(3),(5) and (6). However, item(4) has not been satisfied.

As to item (2), a review of the present petition reveals that applicant has satisfied item (2), in that the applicant has shown that a bona fide attempt was made to present the application papers, including the specification, claims, and drawings to Loraine Thurston and that the legal representative refuses to execute the application.

Regarding item (4) above, an oath or declaration executed by the 37 CFR 1.47(b) applicant on behalf of and as agent for the nonsigning inventor has been submitted with the present petition, however, the declaration is not in compliance with 37 CFR 1.42 and 37 CFR 1.497.

Declaration of the Inventors under 37 CFR 1.42

37 CFR 1.42 *When the Inventor is Dead*, states, in part:

> In case of the death of the inventor, the legal representative (executor, administrator, etc.) of the deceased inventor may make the necessary oath or declaration, and apply for and obtain the patent.

37 CFR 1.497(a)(3) requires that the declaration must identify each inventor and the country of citizenship of each inventor. 37 CFR 1.64(b) requires the declaration to state the relationship of the person (under 37 CFR 1.42) making the declaration for a deceased inventor. The declaration filed 19 March 2004 does not indicate that Loraine Thurston is the legal representative of the deceased inventor. The legal representative of a deceased

inventor must make the application for patent "on the same terms and conditions applicable to the inventor." 35 U.S.C. 117. Additionally, the declaration must fulfill the requirement under 37 CFR 1.497(b)(2).

37 CFR 1.497(b)(2) states the following:

> (2) If the person making the oath or declaration or any supplemental oath or declaration is not the inventor (§§ 1.42, 1.43, or § 1.47) the oath or declaration shall state the relationship of the person to the inventor, and, upon information and belief, the facts which the inventor would have been required to state. If the person signing is the legal representative of a deceased inventor, the oath or declaration shall also state that the person is a legal representative and the citizenship, residence, and mailing address of the legal representative.

Pursuant to 37 CFR 1.497(b)(2), in addition to the residence, citizenship, and post office address of the deceased inventor, the declaration must also provide this information (residence, citizenship, and post office address) for the legal representative. The declaration filed on 19 March 2004 fails to provide the residence and post office address for the deceased inventor and fails to identify the name of the legal representative and her residence, citizenship, and post office address. Accordingly, the declaration is not in compliance with 37 CFR 1.497(b)(2).

For the reasons stated above, it would not be appropriate to accept the application without the signature of Loraine Thurston under 37 CFR 1.47(b) at this time.

CONCLUSION

The petition filed under 37 CFR 1.47(b) is **DISMISSED** without prejudice.

If reconsideration on the merits of this petition is desired, a proper response must be filed within **TWO MONTHS** from the mailing date of this decision. Extensions of time may be obtained under 37 CFR 1.136(a). Any reconsideration request should include a cover letter entitled "Renewed Petition Under 37 CFR 1.47(b)."

Any further correspondence with respect to this matter should be addressed to: Mail Stop PCT, Commissioner for Patents, Office of PCT Legal Administration, P.O. Box 1450, Alexandria, Virginia 22313-1450, with the contents of the letter marked to the attention of the Office of PCT Legal Administration.

Anthony Smith
Attorney-Advisor
Office of PCT Legal Administration
Telephone 703-308-6314
Fax: 703-308-6459

31 AUG 2004

#11

UNITED STATES PATENT AND TRADEMARK OFFICE

COMMISSIONER FOR PATENTS
UNITED STATES PATENT AND TRADEMARK OFFICE
P.O. BOX 1450
ALEXANDRIA, VA 22313-1450
www.uspto.gov

Norman Oblon
Oblon, Spivak, McClelland, Maier & Neustadt
1940 Duke Street
Alexandria, Virginia 22314

In re Application of
THURSTON (deceased) :
Application No.: 10/416,792 :
PCT No.: PCT/GB01/04992 : DECISION ON PETITION
Int. Filing Date: 12 November 2001 : UNDER 37 CFR 1.47(b)
Priority Date: 15 November 2000 :
Attorney Docket No.: 237230US0PCT :
For: DETERMINATION OF EFFECTIVE : COMPOSITION OF A MIXTURE OF HYDROCARBON GASES

This decision is in response to applicant's "Renewed Petition under 37 CFR 1.47(b)" filed 16 August 2004 to accept the application without the signature of the legal representative (Loraine Thurston) of the deceased inventor, Robert Richard Thurston. Additionally, the declaration submitted on 16 August 2004 will be considered pursuant to 37 CFR 1.42.

BACKGROUND

On 12 November 2001, applicant filed international application PCT/GB01/04992 which claimed a priority date of 15 November 2000. A Demand was filed with the International Preliminary Examination Authority prior to the 19th month from the earliest claimed priority date. Accordingly, the thirty-month time period for submitting the requisite basic national fee in the United States of America was to expire 30 months from the priority date, 15 May 2003.

On 15 May 2003, applicant filed a transmittal letter for entry into the national stage in the United States, which was accompanied by the requisite basic national fee as required by 35 U.S.C. 371(c)(1); a copy of international application; and a preliminary amendment.

On 19 August 2003, the United Stated Designated/Elected Office mailed a Notification of Missing Requirements under 35 U.S.C. 371 (Form PCT/DO/EO/905) indicating that an oath or declaration in compliance with 37 CFR 1.497 must be filed. The notification set a two-month time limit in which to respond.

On 19 March 2004, applicant filed petitions 37 CFR 1.47(b); 37 CFR 1.42; and a four-month extension of time. In a decision dated 30 April 2004, applicant's petitions under 37 CFR 1.47(b) and 37 CFR 1.42 were dismissed without prejudice.

On 16 August 2004, applicant filed renewed petitions under 37 CFR 1.47(b) and 37 CFR 1.42.

DISCUSSION

A. Renewed Petition under 37 CFR 1.47(b)

The petition for status under 37 CFR 1.47(b) is moot since the declaration filed 16 August 2004 with the present renewed petition was executed by the previous non-signing legal represenative, Loraine Thurston. The declaration filed 16 August 2004 is acceptable under 37 CFR 1.497.

B. Renewed Petition under 37 CFR 1.42

37 CFR 1.42 *When the Inventor is Dead*, states, in part:

> In case of the death of the inventor, the legal representative (executor, administrator, etc.) of the deceased inventor may make the necessary oath or declaration, and apply for and obtain the patent.

The declaration filed on 16 August 2004 is executed by Loraine Thurston as the "legal representative" of the deceased inventor, Robert Richard Thurston. The declaration is acceptable under 37 CFR 1.42 and complies with 37 CFR 1.497(a)-(b). Accordingly, the requirements for entry into national stage under 35 U.S.C. 371(c) were completed as of 16 August 2004.

CONCLUSION

For the reasons above, the renewed petition is **DISMISSED** as MOOT. The application need not be returned to this Office for any further consideration of Rule 1.47 status and no such status should be indicated on this application file.

The papers filed under 37 CFR 1.42 are **ACCEPTED**.

The application has an international filing date of 12 November 2001 under 35 U.S.C. 363 and a date of 16 August 2004 under 35 U.S.C. 371(c).

This application is being returned to the United States/Elected Office for processing in accordance with this decision.

Anthony Smith
Attorney-Advisor
Office of PCT Legal Administration
Telephone: 703-308-6314
Fax: 703-308-6459

UNITED STATES PATENT AND TRADEMARK OFFICE

UNITED STATES DEPARTMENT OF COMMERCE
United States Patent and Trademark Office
Address: COMMISSIONER FOR PATENTS
P.O. Box 1450
Alexandria, Virginia 22313-1450
www.uspto.gov

CROWELL & MORING LLP
INTELLECTUAL PROPERTY GROUP
P.O. BOX 14300
WASHINGTON, DC 20044-4300

Mail Date: 06/18/2010

Applicant	: Heather Marie Fairhead	: DECISION ON REQUEST FOR
Patent Number	: 7632512	: RECALCULATION of PATENT
Issue Date	: 12/15/2009	: TERM ADJUSTMENT IN VIEW
Application No	: 10/416,800	: OF WYETH AND NOTICE OF INTENT TO
Filed	: 10/10/2003	: ISSUE CERTIFICATE OF CORRECTION
		:

The Request for Recalculation is **GRANTED** to the extent indicated.

The patent term adjustment has been determined to be **1036** days. The USPTO will *sua sponte* issue a certificate of correction reflecting the amount of PTA days determined by the recalculation.

Prior to the issuance of the certificate of correction, the USPTO will afford patentee an opportunity to be heard and request reconsideration. Accordingly, patentee has **one month or thirty (30) days**, whichever is longer, to file a request for reconsideration of this patent term adjustment calculation. See 35 U.S.C. 154(b)(3)(B)(ii) and 37 CFR 1.322(a)(4). No extensions of time will be granted under 37 CFR 1.136.

Patentee should use document code PET.OP if electronically filing a request for reconsideration of this patent term adjustment calculation. The patentee must also include the information required by 37 CFR 1.705(b)(2) and the fee required by 37 CFR 1.18(e). If patentee does not file a timely request for reconsideration of this patent term adjustment calculation including the information required by 37 CFR 1.705(b)(2) and the fee required by 37 CFR 1.18(e), the USPTO will issue a certificate of correction reflecting the PTA determination noted above.

Patentee should be aware that in order to preserve the right to review in the United States District Court for the District of Columbia of the USPTO patent term adjustment determination, patentee must ensure that he or she also take the steps required under 35 U.S.C. 154(b)(4)(A) in a timely manner. Nothing in the request for recalculation should be construed as providing an alternative time frame for commencing a civil action under 35 U.S.C. 154(b)(4)(A).

Any questions concerning this decision should be directed to the Office of Patent Legal Administration at 571-272-7702.

UNITED STATES PATENT AND TRADEMARK OFFICE

COMMISSIONER FOR PATENTS
UNITED STATES PATENT AND TRADEMARK OFFICE
P.O. BOX 1450
ALEXANDRIA, VA 22313-1450
www.uspto.gov

#3

27 AUG 2003

Zuhair Al-Kahzrajie
Glen Chass Lodge
Port St. Mary, Isle of Man
United Kingdom

In re Application of AL-KAHZRAJIE	:	
U.S. Application No.: 10/416,808	:	
PCT Application No.: PCT/GB01/04215	:	DECISION
Int. Filing Date: 21 September 2001	:	
Priority Date Claimed: 22 September 2000	:	
Attorney Docket No.: (none)	:	
For: BUILDING APPARATUS AND METHOD	:	

This is in response to applicant's "Petition for Revival of an International Application for Patent Designating the U.S. Abandoned Unintentionally Under 37 CFR 1.137(b)" filed 06 May 2003.

BACKGROUND

On 21 September 2001, applicant filed international application PCT/GB01/04215, which claimed priority of an earlier United Kingdom application filed 22 September 2000. A copy of the international application was communicated to the USPTO from the International Bureau on 28 March 2002. The thirty-month period for paying the basic national fee in the United States expired on 22 March 2003.

International application PCT/GB01/04215 became abandoned as to the United States for failure to timely pay the basic national fee.

On 06 May 2003, applicant filed the present petition under 37 CFR 1.137(b).

DISCUSSION

Under 37 CFR 1.137(b), a petition requesting that an application be revived on the grounds of unintentional abandonment must be accompanied by: (1) the required reply unless previously filed, (2) the petition fee as set forth in 37 CFR 1.17(m), (3) a statement that the entire delay in filing the required reply from the due date for the reply until the filing of a grantable petition was unintentional, and (4) a terminal disclaimer if the application was filed before 08 June 1995.

With regard to item (1), applicant has provided the required reply under 35 U.S.C. 371.

With regard to item (2), as of 01 January 2003, the small entity fee for a petition under 37 CFR 1.137(b) is $650.00. See 37 CFR 1.17(m). However, applicant has submitted only $640.00 towards the petition fee.

With regard to item (3), applicant has provided the required statement.

With regard to item (4), because the international application was filed after 08 June 1995, no terminal disclaimer is required.

CONCLUSION

Because applicant has failed to satisfy item (2) above, the petition under 37 CFR 1.137(b) is DISMISSED without prejudice.

If reconsideration on the merits of the petition is desired, a proper response must be filed within TWO (2) MONTHS from the mail date of this decision. Extensions of time are available under 37 CFR 1.136(a). Any reconsideration request should include a cover letter entitled "Renewed Petition Under 37 CFR 1.137(b)".

Please direct further correspondence with respect to this matter to Mail Stop PCT, Commissioner for Patents, Office of PCT Legal Administration, P.O. Box 1450, Alexandria, Virginia 22313-1450, with the contents of the letter marked to the attention of the Office of PCT Legal Administration.

Bryan Tung
PCT Legal Examiner
PCT Legal Office

Telephone: 703-308-6614
Facsimile: 703-308-6459

15 OCT 2003

#5

UNITED STATES PATENT AND TRADEMARK OFFICE

COMMISSIONER FOR PATENTS
UNITED STATES PATENT AND TRADEMARK OFFICE
P.O. BOX 1450
ALEXANDRIA, VA 22313-1450
www.uspto.gov

Zuhair Al-Kahzrajie
Glen Chass Lodge
Port St. Mary, Isle of Man
United Kingdom

In re Application of AL-KAHZRAJIE	:	
U.S. Application No.: 10/416,808	:	
PCT Application No.: PCT/GB01/04215	:	DECISION
Int. Filing Date: 21 September 2001	:	
Priority Date Claimed: 22 September 2000	:	
Attorney Docket No.: (none)	:	
For: BUILDING APPARATUS AND METHOD	:	

This is in response to applicant's "Renewed Petition Under 37 CFR 1.137(b)" filed 10 October 2003.

BACKGROUND

On 21 September 2001, applicant filed international application PCT/GB01/04215, which claimed priority of an earlier United Kingdom application filed 22 September 2000. A copy of the international application was communicated to the USPTO from the International Bureau on 28 March 2002. The thirty-month period for paying the basic national fee in the United States expired on 22 March 2003.

International application PCT/GB01/04215 became abandoned as to the United States for failure to timely pay the basic national fee.

On 06 May 2003, applicant filed a petition under 37 CFR 1.137(b).

On 27 August 2003, this Office mailed a decision dismissing the 06 May 2003 petition on grounds that the proper petition fee was not submitted.

On 10 October 2003, applicant filed the present renewed petition under 37 CFR 1.137(b).

DISCUSSION

The renewed petition states that applicant's original credit card authorization form included instructions to charge any required amount. However, a copy of the credit card

authorization form does not appear in the application file, and applicant has not furnished documentary evidence that the credit card authorization contained instructions to charge any required amount. Therefore, the USPTO is currently not able to charge the fee deficiency to applicant's credit card. Applicant should either: (1) provide a copy of the originally submitted credit card authorization form or (2) submit the outstanding fee. The USPTO credit card authorization form can be obtained via the Internet at the following address. http://www.uspto.gov/web/forms/2038.pdf .

CONCLUSION

For the reasons above, the renewed petition under 37 CFR 1.137(b) is DISMISSED without prejudice.

If reconsideration on the merits of the petition is desired, a proper response must be filed within TWO (2) MONTHS from the mail date of this decision. Extensions of time are available under 37 CFR 1.136(a). Any reconsideration request should include a cover letter entitled "Renewed Petition Under 37 CFR 1.137(b)".

Please direct further correspondence with respect to this matter to Mail Stop PCT, Commissioner for Patents, Office of PCT Legal Administration, P.O. Box 1450, Alexandria, Virginia 22313-1450, with the contents of the letter marked to the attention of the Office of PCT Legal Administration.

Bryan Tung
PCT Legal Examiner
PCT Legal Office

Telephone: 703-308-6614
Facsimile: 703-308-6459

23 DEC 2003

UNITED STATES PATENT AND TRADEMARK OFFICE

COMMISSIONER FOR PATENTS
UNITED STATES PATENT AND TRADEMARK OFFICE
P.O. BOX 1450
ALEXANDRIA, VA 22313-1450
www.uspto.gov

Zuhair Al-Kahzrajie
Glen Chass Lodge
Port St. Mary, Isle of Man
United Kingdom

In re Application of AL-KAHZRAJIE	:	
U.S. Application No.: 10/416,808	:	
PCT Application No.: PCT/GB01/04215	:	COMMUNICATION
Int. Filing Date: 21 September 2001	:	
Priority Date Claimed: 22 September 2000	:	
Attorney Docket No.: (none)	:	
For: BUILDING APPARATUS AND METHOD	:	

This is in response to the correspondence filed 01 December 2003.

The response states that it includes a credit card payment form. Under USPTO procedures, a credit card payment form is immediately sent to a financial processing division. For privacy reasons, a copy of the credit card form is not placed in the application file. Because the content of the credit card payment form cannot be determined by reviewing the application file, applicant is requested to transmit a copy of the submitted credit card authorization form via facsimile to the undersigned. Applicant should take care to conceal sensitive information (i.e. the credit card number) before transmitting the copy of the form. The copy of the form should be accompanied by a statement that the form represents a true copy of the credit card authorization form received on 01 December 2003.

Bryan Tung
PCT Legal Examiner
PCT Legal Office

Telephone: 703-308-6614
Facsimile: 703-308-6459

21 JAN 2004

UNITED STATES PATENT AND TRADEMARK OFFICE

COMMISSIONER FOR PATENTS
UNITED STATES PATENT AND TRADEMARK OFFICE
P.O. BOX 1450
ALEXANDRIA, VA 22313-1450
www.uspto.gov

Zuhair Al-Kahzrajie
Glen Chass Lodge
Port St. Mary, Isle of Man
United Kingdom

In re Application of AL-KAHZRAJIE	:	
U.S. Application No.: 10/416,808	:	
PCT Application No.: PCT/GB01/04215	:	DECISION
Int. Filing Date: 21 September 2001	:	
Priority Date Claimed: 22 September 2000	:	
Attorney Docket No.: (none)	:	
For: BUILDING APPARATUS AND METHOD	:	

This is in response to the correspondence filed 19 January 2004, which is being treated as a renewed petition under 37 CFR 1.137(b).

BACKGROUND

On 21 September 2001, applicant filed international application PCT/GB01/04215, which claimed priority of an earlier United Kingdom application filed 22 September 2000. A copy of the international application was communicated to the USPTO from the International Bureau on 28 March 2002. The thirty-month period for paying the basic national fee in the United States expired on 22 March 2003.

International application PCT/GB01/04215 became abandoned as to the United States for failure to timely pay the basic national fee.

On 06 May 2003, applicant filed a petition under 37 CFR 1.137(b).

On 27 August 2003, this Office mailed a decision dismissing the 06 May 2003 petition on grounds that the proper petition fee was not submitted.

On 10 October 2003, applicant filed a renewed petition under 37 CFR 1.137(b).

On 15 October 2003, this Office mailed a decision dismissing the 10 October 2003 renewed petition.

On 01 December 2003, applicant filed a response to the 15 October 2003 decision.

On 23 December 2003, this Office mailed a communication requesting applicant to supply additional documentary evidence.

On 19 January 2004, applicant filed the present renewed petition under 37 CFR 1.137(b).

DISCUSSION

Under 37 CFR 1.137(b), a petition requesting that an application be revived on the grounds of unintentional abandonment must be accompanied by: (1) the required reply unless previously filed, (2) the petition fee as set forth in 37 CFR 1.17(m), (3) a statement that the entire delay in filing the required reply from the due date for the reply until the filing of a grantable petition was unintentional, and (4) a terminal disclaimer if the application was filed before 08 June 1995.

Applicant has previously satisfied items (1), (3), and (4) above.

With regard to item (2), the required fee has been provided.

CONCLUSION

For the reasons above, the renewed petition under 37 CFR 1.137(b) is GRANTED.

The application has an International Filing Date under 35 U.S.C. 363 of 21 September 2001, and a date under 35 U.S.C. 371(c) of 06 May 2003.

The application is being forwarded to the DO/EO/US for further processing in accordance with this decision.

Bryan Tung

Bryan Tung
PCT Legal Examiner
PCT Legal Office

Telephone: 703-308-6614
Facsimile: 703-308-6459

06 JUL 2004

#4

UNITED STATES PATENT and TRADEMARK OFFICE

COMMISSIONER FOR PATENTS
UNITED STATES PATENT AND TRADEMARK OFFICE
P.O BOX 1450
ALEXANDRIA, VA 22313-1450
www.uspto.gov

Janet Sleath
SPECKMAN LAW GROUP
1501 Western Avenue, Suite 100
Seattle, Washington 98101

In re Application of	:	DECISION ON
FLUCK et al.	:	
PCT No.: PCT/CH01/00656	:	
Application No.: 10/416,821	:	PETITION UNDER
Int. Filing Date: 08 November 2001	:	
Priority Date: 08 November 2000	:	
Attorney's Docket No.: 82000.2010	:	37 CFR 1.47(b)
For: OPTICAL WAVEGUIDE COUPLING	:	

This decision is in response to applicant's "COMBINED DECLARATION UNDER 37 CFR 1.47(b) AND POWER OF ATTORNEY FOR PATENT APPLICATION" submitted on 27 October 2003 that seeks the acceptance of the application without the signature of inventors Mr. Daniel Fluck and Mr. Miguel Juan Flores. The requisite petition fee of $130.00 has been paid by charging the petitioner's Deposit Account No. 19-3555.

BACKGROUND

On 08 November 2001, applicant filed international application PCT/CH01/00656, which claimed priority of an earlier application filed 08 November 2000. A copy of the international application was transmitted to the United States from the International Bureau on 16 May 2003. A Demand was filed for this application. The thirty-month period for paying the basic national fee in the United States expired at midnight on 08 May 2003.

On 12 May 2003, applicant filed a transmittal letter for entry into the national stage in the United States, which was accompanied by, inter alia, the requisite basic national fee as required by 35 U.S.C. 371(c)(1). However, no executed declaration or oath was submitted at such time.

On 27 August 2003, the United States Designated/Elected Office mailed a Notification of Missing Requirements under 35 U.S.C. 371 indicating, *inter alia*, that "the oath or declaration of the inventors, in compliance with 37 CFR 1.497(a) and (b), identifying the application by the International application number and international filing date. The notification also indicated that the surcharge for filing the oath or declaration later than 30 months from the priority date as required by 37 CFR 1.492(e) must be filed. The notification set two months from the date of this notice or 32 months from the priority date for the application, whichever is later. Failure to properly respond will result in abandonment."

In an attempt to satisfy the requirements of 35 U.S.C. 371(c)(4), applicant filed on 27 October 2003, the following:

1) a petition under 37 CFR 1.47(b);

2) a Declaration for U.S. Patent Application executed by Gert ILLIG;

3) the required petition fee.

DISCUSSION

A petition under 37 CFR 1.47(b) must be accompanied by (1) the fee under 37 CFR 1.17(h), (2) factual proof that the inventor refuses to execute the application or cannot be reached after diligent effort, (3) a statement of the last known address of the inventor, (4) an oath or declaration by the 37 CFR 1.47(b) applicant on behalf of and as agent for the non-signing inventor, (5) proof that the 37 CFR 1.47(b) applicant has sufficient proprietary interest in the application, and (6) a showing that such action is necessary to preserve the rights of the parties or to prevent irreparable damage.

Petitioner has satisfied items (1), (3), (4), and (6) but not items (2), and (5) thus not completing the requirements under 37 CFR 1.47(b).

Regarding requirement (1), although petitioner indicates that the $130.00 petition fee has been paid by check, there is no record of the check being cleared by the USPTO. Nevertheless, the petition fee has been charged to petitioner's Deposit Accunt No. 19-3555 as authorized in the transmittal letter filed on 12 May 2003.

Regarding requirement (2), although petitioner has concluded that Messr. Fluck and Flores have refused to sign the declaration the petition does not include sufficient proof to establish that inventors have refused to execute the application. The standards for proof are set forth in MPEP § 409.03(d), which provides:

> The affidavit or declaration of facts must be signed, where at all possible, by a person having firsthand knowledge of the facts recited therein. Statements based on hearsay will not normally be accepted....
>
> Where a refusal of the inventor to sign the application papers is alleged, the circumstances of this refusal must be specified in an affidavit or declaration by the person to whom the refusal was made. Statements by a party not present when an oral refusal is made will not be accepted.
>
> Before a refusal can be alleged, it must be demonstrated that a bona fide attempt was made to present a copy of the application papers (specification, including claims, drawings, and oath or declaration) to the nonsigning inventor for signature. A copy of the application papers should be sent to the last known address of the non - signing inventor, or, if the non - signing

> inventor is represented by counsel, to the address of the non - signing inventor's attorney.
> When there is an express oral refusal, that fact along with the time and place of the refusal must be stated in the affidavit or declaration. When there is an express written refusal, a copy of the document evidencing that refusal must be made part of the affidavit or declaration.

Mr. Illig assets that on September 29, 2003 the undersigned attorney sent via registered mail, the subject patent application papers including the Declaration to the last known addresses of Mr. Fluck and Mr. Flores for their review. They have not return or executed the application papers and the declarations. However, it is unclear if the inventors received the documents since no documentary evidence has been provided to support this assertion such as the postal receipt signed by them of receiving the documents.

Consequently, the petition does not include sufficient factual proof that they refuse to sign the required papers.

Regarding item (3), applicant has stated the last known address of the inventors:

Mr. Daniel Fluck
Wingertstrasse 17
CH-8424 Embrach, SWITZERLAND

Mr. Juan Flores
Aastrasse 11
CH-8853 Lachen, SWITZERLAND

Regarding item (4) a declaration has been provided which is executed by Mr. Gert ILLIG, Managing Director signing on behalf of the corporation for the non-signing inventors, Mr. FLUCK and Mr. FLORES.

Regarding item (5) applicant has not submitted proof that applicant has sufficient proprietary interest in the application. A copy of the Consulting and Development Agreement of Mr. Fluck and the employment contract between laser & electronics Gmbh and Miguel Juan Flores have been provided with the application; however, no corroborating statement has been providing by a person having first hand knowledge of the facts that the invention was made by the Mr. Fluck and Mr. Flores while employed by the 37 CFR 1.47(b) applicant (DVL Lasers & Electronics GmbH). In addition, it is unclear from the agreements provided if Mr. Fluck and Mr. Flores assigned this invention to the 37 CFR 1.47(b) applicant. In the agreement with Mr. Fluck, it is unclear what is meant by the phrase "places at the customer's disposal the results of his activities" and how this assigns the invention to the applicant. Similarly, in the agreement with Mr. Flores it is unclear how the phrase "all the know how which is created..." assigns the invention to the applicant. Applicant must file a legal memorandum explaining how these phrases assign the invention to DVL Lasers & Electronics GmbH. Note MPEP 409.03(f).

Regarding item (6) applicant has presented an adequate showing that the granting of this petition is necessary to preserve the rights of the parties or to prevent irreparable damage if the response to the missing parts of the application is not timely.

Accordingly, since items (2) and (5) under 37 CFR 1.47(b) have not been met it is not appropriate to accord the national stage application status at this time.

CONCLUSION

The petition under 37 CFR 1.47(b) is **DISMISSED** without prejudice.

If reconsideration on the merits of this petition is desired, a proper response must be filed within TWO (2) MONTHS from the mail date of this decision. Any reconsideration request should include a cover letter entitled "Renewed Petition Under 37 CFR 1.47(b)." No additional petition fee is required. Extensions of time may be obtained under 37 CFR 1.136(a).

Any further correspondence with respect to this matter should be addressed to the Mail Stop PCT, Commissioner for Patents, Office of PCT Legal Administration, P.O. Box 1450, Alexandria, Virginia 22313-1450, with the contents of the letter marked to the attention of the Office of PCT Legal Administration.

Rafael Bacares
PCT Legal Examiner
PCT Legal Office
Tel: (703) 308-6312
Fax: (703) 308-6459

Boris Milef
PCT Legal Examiner
PCT Legal Office

03 MAR 2[illegible]5

UNITED STATES PATENT and TRADEMARK OFFICE

COMMISSIONER FOR PATENTS
UNITED STATES PATENT AND TRADEMARK OFFICE
P.O BOX 1450
ALEXANDRIA, VA 22313-1450
www.uspto.gov

Janet Sleath
SPECKMAN LAW GROUP
1501 Western Avenue, Suite 100
Seattle, Washington 98101

In re Application of	:	DECISION ON RENEWED
FLUCK et al.	:	
PCT No.: PCT/CH01/00656	:	
Application No.: 10/416,821	:	PETITION UNDER
Int. Filing Date: 08 November 2001	:	
Priority Date: 08 November 2000	:	
Attorney's Docket No.: 82000.2010	:	37 CFR 1.47(b)
For: OPTICAL WAVEGUIDE COUPLING	:	

This decision is in response to applicant's " RENEWED PETITION TO PERMIT FILING ON BEHALF OF INVENTORS WHO REFUSED TO SIGN UNDER 37 CFR 1.47(b)" filed on 09 September 2004 that seeks the acceptance of the application without the signature of inventors Mr. Daniel Fluck and Mr. Miguel Juan Flores.

BACKGROUND

In a decision from this Office on 06 July 2004, the petition filed on 27 October 2003 was dismissed because applicant did not satisfy items (2) and (5) under 37 CFR 1.47(b).

On 09 September 2004, applicant filed a renewed petition which includes, inter alia, documentary evidence to support applicant's assertion that the application papers were sent to the non-signing inventors and a legal memorandum submitted by Dr. Satmer.

DISCUSSION

A petition under 37 CFR 1.47(b) must be accompanied by (1) the fee under 37 CFR 1.17(h), (2) factual proof that the inventor refuses to execute the application or cannot be reached after diligent effort, (3) a statement of the last known address of the inventor, (4) an oath or declaration by the 37 CFR 1.47(b) applicant on behalf of and as agent for the non-signing inventor, (5) proof that the 37 CFR 1.47(b) applicant has sufficient proprietary interest in the application, and (6) a showing that such action is necessary to preserve the rights of the parties or to prevent irreparable damage.

Petitioner has now satisfied requirements (2) and (5) of 37 CFR 1.47(b), thus completing the requirements under 37 CFR 1.47(b).

Regarding requirement (2), petitioner has provided copies of the postal receipts showing that the registered letters enclosing the application papers were sent on September 29, 2003 to the last known addresses of Mr. Fluck and Mr. Flores. The exhibition includes a copy of a postal distribution list, dated September 30, 2004, on which Mr. Fluck confirmed receipt of the registered letter with his signature and copy of the postal envelope delivered to Mr. Flores, which states "already signed." Neither Mr. Fluck nor Mr. Flores has executed the required papers.

Regarding item (5) applicant has submitted proof that applicant has sufficient proprietary interest in the application because the legal memorandum prepared by Dr. Satmer establishes that Mr. Fluck's consulting relationship and Mr. Flores' employment relationship with DVL assign the invention disclosed in the subject application to DVL Lasers & Electronic GMbh and such. DVL is now afflicted with "SynPro AG."

Accordingly, it is appropriate to accord the national stage application status under 37 CFR 1.47(b) at this time.

CONCLUSION

The renewed petition under 37 CFR 1.47(b) is **GRANTED**.

As provided in 37 CFR 1.47(b), a notice of the filing of this application will be forwarded to the non-signing inventor at his last known address of record.

A notice of the filing of the application under 37 CFR 1.47(b) will be published in the Official Gazette.

This application is being returned to the United States Designated/Elected Office (DO/EO/US) to continue national stage processing of the application. The application will be given a 35 U.S.C. 371(c)(1), (c)(2), and (c)(4) date of **27 October 2003.**

Rafael Bacares
PCT Legal Examiner
PCT Legal Office
Tel: (703) 308-6312
Fax: (703) 308-6459

Boris Milef
PCT Legal Examiner
PCT Legal Office

03 MAR 2005

UNITED STATES PATENT and TRADEMARK OFFICE

COMMISSIONER FOR PATENTS
UNITED STATES PATENT AND TRADEMARK OFFICE
P.O BOX 1450
ALEXANDRIA, VA 22313-1450
www.uspto.gov

Mr. Daniel Fluck
Wingertstrasse 17
CH-8424 Embrach, SWITZERLAND

In re Application of
FLUCK et al.
PCT No.: PCT/CH01/00656
Application No.: 10/416,821
Int. Filing Date: 08 November 2001
Priority Date: 08 November 2000
Attorney's Docket No.: 82000.2010
For: OPTICAL WAVEGUIDE COUPLING

Dear Mr. Fluck:

You are named as an inventor in the above identified United States patent application, filed under the provisions of 37 CFR 1.47(b) and 35 U.S.C. 118. Should a patent be granted, you will be designated as an inventor.

As a named inventor, you are entitled to inspect any paper in the file wrapper of the application, order copies of all or any part thereof (at a prepaid cost per 37 CFR 1.19) or to make your position of record in the application. Alternatively, you may arrange to do any of the preceding through a registered patent agent or attorney presenting written authorization from you. If you care to join in the application, counsel of record (see below) would presumably assist you. Joining in the application would entail the filing of an appropriate oath or declaration by you pursuant to 37 CFR 1.63.

Rafael Bacares
PCT Legal Examiner
PCT Legal Office
Telephone: (571) 272-3276
Facsimile: (571) 273-0459

Janet Sleath
SPECKMAN LAW GROUP
1501 Western Avenue, Suite 100
Seattle, Washington 98101

UNITED STATES PATENT AND TRADEMARK OFFICE

Commissioner for Patents
United States Patent and Trademark Office
P.O. Box 1450
Alexandria, VA 22313-1450
www.uspto.gov

Date : March 25, 2007

Patent No. : 7,128,473 B2
Inventor(s) : Fluck, et al.
Issued : October 31, 2006
Title : **OPTICAL WAVEGUIDE COUPLING**
Docket No. : 82000.2010

Re: Request for Certificate of Correction

Consideration has been given your request for the issuance of a certificate of correction for the above-identified patent under the provisions of 37 CFR 1.322 and/or 1.323.

Assignees' names and addresses (assignment data) printed in a patent are based *solely* on information supplied in the appropriate space for identifying the assignment data, i.e., item 3 of the Fee(s) Transmittal Form PTOL-85B. After payment of the issue fee, correction of assignment data submitted on the PTOL-85B can only be done by Certificate of Correction under 37 CFR 1.323, with a request under 37 CFR 3.81(b).

A request for a patent to be corrected to state the name of the assignee must:

A. state that the assignment was submitted for recordation as set forth in 37 CFR 3.11 before issuance of the patent;
B. include a request for a certificate of correction under 37 CFR 1.323 along with the fee set forth in 37 CFR 1.20(a); and
C. include the processing fee set forth in 37 CFR 1.17(i).

If the request is granted, Certificates of Correction Branch will be notified that a Certificate of Correction may be issued.

See Manual of Patent Examining Procedure, Section 1481.01 (Rev. 3) (Oct. 2005).

Applicant has not included items A and or C above, accordingly, the request for Certificate of Correction to add or change the assignee data is denied.

Any request under 37 CFR 3.81(b) should be directed to the following address or facsimile number:

By mail:	Mail Stop PETITIONS Commissioner for Patents Post Office Box 1450 Alexandria, VA 22313-1450
By hand:	Customer Service Window Mail Stop Petitions Randolph Building 401 Dulany Street Alexandria, VA 22314
By fax:	571-273-8300 ATTN: Office of Petitions

If a fee (currently $100) was previously submitted for consideration of a Request for Certificate of Correction, under CFR 1.323, to correct assignment data, no additional fee is required.

Elisha Evans
For Cecelia Newman
Decisions & Certificates
of Correction Branch
(703) 308-9390 ext. 110

SPECKMAN LAW GROUP PLLC
1201 THIRD AVENUE, SUITE 330
SEATTLE WA 98101

CBN/eme

UNITED STATES PATENT AND TRADEMARK OFFICE

Commissioner for Patents
United States Patent and Trademark Office
P.O. Box 1450
Alexandria, VA 22313-1450
www.uspto.gov

SPECKMAN LAW GROUP PLLC
1201 THIRD AVENUE, SUITE 330
SEATTLE WA 98101

MAILED

APR 2 6 2010

OFFICE OF PETITIONS

In re Patent No. 7,128,473	:	
Issue Date : October 31, 2006	:	
Application No. 10/416,821	:	ON PETITION
Filed: October 27, 2003	:	
Attorney Docket No. 13396.1001	:	

This is a decision on the petition filed January 21, 2010, which is being treated as a request under 37 CFR 3.81(b)[1] to correct the name of the assignee on the front page of the above-identified patent by way of a Certificate of Correction.

The request is **GRANTED**.

Telephone inquiries concerning this decision may be directed to Diane C. Goodwyn at (571) 272-6735. Inquiries regarding the issuance of a certificate of correction should be directed to the Certificate of Correction Branch at (571) 272-4200.

The Certificates of Correction Branch will be notified of this decision granting the petition under 37 CFR 3.81(b) and directing issuance of the requested Certificate of Correction.

Thurman K. Page
Petitions Examiner
Office of Petitions

[1] *See* MPEP 1309, subsection II; and Official Gazette of June 22, 2004.

UNITED STATES PATENT AND TRADEMARK OFFICE

Commissioner for Patents
United States Patent and Trademark Office
P.O. Box 1450
Alexandria, VA 22313-1450
www.uspto.gov

MCKENNA LONG & ALDRIDGE LLP
1900 K STREET, NW
WASHINGTON, DC 20006

COPY MAILED

MAR 0 5 2009

OFFICE OF PETITIONS

In re Application of	:	
Jacob WEITMAN	:	
Application No. 10/416,841	:	DECISION ON PETITION
Filed: May 16, 2003	:	TO WITHDRAW
Attorney Docket No. 5202-0101PUS1	:	FROM RECORD
	:	

This is a decision on the Request to Withdraw as attorney or agent of record under 37 C.F.R. § 1.36(b), filed January 29, 2009.

The request is **APPROVED**.

A grantable request to withdraw as attorney/agent of record must be signed by every attorney/agent seeking to withdraw or contain a clear indication that one attorney is signing on behalf of another/others. The Office requires the practitioner(s) requesting withdrawal to certify that he, she, or they have: (1) given reasonable notice to the client, prior to the expiration of the response period, that the practitioner(s) intends to withdraw from employment; (2) delivered to the client or a duly authorized representative of the client all papers and property (including funds) to which the client is entitled; and (3) notified the client of any responses that may be due and the time frame within which the client must respond, pursuant 37 CFR 10.40(c).

The request was signed by Charles Gorenstein on behalf of all the attorneys of record.

All the attorneys of record have been withdrawn.

Applicant is reminded that there is no attorney of record at this time.

The correspondence address of record has been changed and the new correspondence address is the address indicated below until otherwise properly notified by the applicant.

Telephone inquiries concerning this decision should be directed to the undersigned at 571-272-6735.

Diane Goodwyn
Petitions Examiner
Office of Petitions

cc: MR. JACOB WEITMAN
FRAMNASVAGEN 7
SE-182 63 DJURSHOLM,
SWEDEN

UNITED STATES PATENT AND TRADEMARK OFFICE

Commissioner for Patents
United States Patent and Trademark Office
P.O. Box 1450
Alexandria, VA 22313-1450
www.uspto.gov

JACOB WEITMAN
FRAMNASVAGEN 7
SE-182 DJURSHOLM SE SWEDEN

COPY MAILED

APR 2 0 2009

OFFICE OF PETITIONS

In re Application of	:	
Jacob WEITMAN	:	
Application No. 10/416,841	:	DECISION ON PETITION
Filed: May 16, 2003	:	TO WITHDRAW
Attorney Docket No. 5202-0101PUS1	:	FROM RECORD
	:	

This is a decision on the Request to Withdraw as attorney or agent of record under 37 C.F.R. § 1.36(b), filed March 23, 2009.

The request is **NOT APPROVED** as moot.

A review of the file record indicates that all the attorneys of record were previously withdrawn with the request dated January 29, 2009. Accordingly, the request to withdraw under 37 C.F.R. § 1.36(b) is moot.

All communications from the Office will continue to be directed to the above-identified address until otherwise property notified by the applicant.

Telephone inquires concerning this decision should be directed to undersigned at 571-272- 6735.

Diane Goodwyn
Petitions Examiner
Office of Petitions

cc: CHARLES GORENSTEIN
BIRCH, STEWART, KOLASCH & BIRCH, LLP
8110 GATEHOUSE ROAD
SUITE 100 EAST
FALLS CHURCH, VA 22040-0747

UNITED STATES PATENT AND TRADEMARK OFFICE

15 APR 2009

Commissioner for Patents
United States Patent and Trademark Office
P.O. Box 1450
Alexandria, VA 22313-1450
www.uspto.gov

23838
KENYON & KENYON LLP
1500 K Street N.W.
Suite 700
Washington, DC

In re Application of MATSUDA *et al* U.S. Application No.: 10/416,855 PCT No.: PCT/JP2006/310562 Int. Filing Date: 20 November 2001 Priority Date: 20 November 2000 Attorney Docket No.: 12218/13 For: PROCESS FOR PRODUCING COENZYME Q10	:	**DECISION**

This decision is in response to the "Request for a Corrected Filing Receipt" filed on 12 November 2003.

This request is treated as a petition under 37 CFR 1.181 and is **GRANTED** as follows:

An executed declaration was not submitted until 25 September 2003 As such, the date of receipt of 35 U.S.C. 371(c)(1), (c)(2), and (c)(4) requirements on the Notice of Acceptance of Application Under 35 U.S.C. 371 and 37 CFR 1.495 (Form PCT/DO/EO/903) and the "Filing or 371(c) Date" on the filing receipt mailed 03 November 2003 should be recorded as 25 September 2003.

Accordingly, the Form PCT/DO/EO/903 and filing receipt are both **VACATED**.

This application is being forwarded to the National Stage Processing Division of the Office of PCT Operations for mailing a corrected Form PCT/DO/EO/903 and filing receipt.

James Thomson

James Thomson
Attorney Advisor
Office of PCT Legal Administration

Tel.: (571) 272-3302

PTO/SB/66 (03-09)
Approved for use through 03/31/2012. OMB 0651-0016
U.S. Patent and Trademark Office: U.S. DEPARTMENT OF COMMERCE
Under the Paperwork Reduction Act of 1995, no persons are required to respond to a collection of information unless it displays valid OMB control number.

PETITION TO ACCEPT UNINTENTIONALLY DELAYED PAYMENT OF MAINTENANCE FEE IN AN EXPIRED PATENT (37 CFR 1.378(c))

Patent Number	Issue Date (YYYY-MM-DD)	Application Number	Filing Date (YYYY-MM-DD)	Docket Number (if applicable)
6903915	2005-06-07	10416893	2003-05-16	4590-173

CAUTION: Maintenance fee (and surcharge, if any) payment must correctly identify: (1) the patent number and (2) the application number of the actual U.S. application leading to issuance of that patent to ensure the fee(s) is/are associated with the correct patent. 37 CFR 1.366(c) and (d).

SMALL ENTITY
☐ Patentee claims, or has previously claimed, small entity status. See 37 CFR 1.27.

LOSS OF ENTITLEMENT TO SMALL ENTITY STATUS
☐ Patentee is no longer entitled to small entity status. See 37 CFR 1.27(g)

NOT Small Entity		Small Entity	
Fee	Code	Fee	Code
◉ 3 ½ year	(1551)	○ 3 ½ year	(2551)
○ 7 ½ year	(1552)	○ 7 ½ year	(2552)
○ 11 ½ year	(1553)	○ 11 ½ year	(2553)

SURCHARGE
The surcharge required by 37 CFR 1.20(i)(2) (Fee Code 1558) must be paid as a condition of accepting unintentionally delayed payment of the maintenance fee.

MAINTENANCE FEE (37 CFR 1.20(e)-(g))
The appropriate maintenance fee must be submitted with this petition.

STATEMENT
THE UNDERSIGNED CERTIFIES THAT THE DELAY IN PAYMENT OF THE MAINTENANCE FEE TO THIS PATENT WAS UNINTENTIONAL

PETITIONER(S) REQUEST THAT THE DELAYED PAYMENT OF THE MAINTENANCE FEE BE ACCEPTED AND THE PATENT REINSTATED

THIS PORTION MUST BE COMPLETED BY THE SIGNATORY OR SIGNATORIES

37 CFR 1.378(d) states: "Any petition under this section must be signed by an attorney or agent registered to practice before the Patent and Trademark Office, or by the patentee, the assignee, or other party in interest."

I certify, in accordance with 37 CFR 1.4(d)(4) that I am

◉ An attorney or agent registered to practice before the Patent and Trademark Office

○ A sole patentee

○ A joint patentee; I certify that I am authorized to sign this submission on behalf of all the other patentees.

○ A joint patentee; all of whom are signing this e-petition

○ The assignee of record of the entire interest

Patent Practitioner			
A signature of the applicant or representative is required in accordance with 37 CFR 1.33 and 10.18. Please see 37 CFR 1.4(d) for the form of the signature			
Signature	/Kenneth M. Berner/	Date (YYYY-MM-DD)	2009-10-20
Name	Kenneth M. Berner	Registration Number	37093

This collection of information is required by 37 CFR 1.378(c). The information is required to obtain or retain a benefit by the public which is to file (and by the USPTO to process) an application. Confidentiality is governed by 35 U.S.C. 122 and 37 CFR 1.11 and 1.14. This collection is estimated to take 1 hour to complete, including gathering, preparing, and submitting the completed application form to the USPTO. Time will vary depending upon the individual case. Any comments on the amount of time you require to complete this form and/ or suggestions for reducing this burden, should be sent to the Chief Information Officer, U.S. Patent and Trademark Office, U.S. Department of Commerce, P.O. Box 1450, Alexandria, VA 22313-1450. DO NOT SEND FEES OR COMPLETED FORMS TO THIS ADDRESS. **This form can only be used when in conjunction with EFS-Web. If this form is mailed to the USPTO, it may cause delays in reinstating the patent.**

Privacy Act Statement

The Privacy Act of 1974 (P.L. 93-579) requires that you be given certain information in connection with your submission of the attached form related to a patent application or patent. Accordingly, pursuant to the requirements of the Act, please be advised that: (1) the general authority for the collection of this information is 35 U.S.C. 2(b)(2); (2) furnishing of the information solicited is voluntary; and (3) the principal purpose for which the information is used by the U.S. Patent and Trademark Office is to process and/or examine your submission related to a patent application or patent. If you do not furnish the requested information, the U.S. Patent and Trademark Office may not be able to process and/or examine your submission, which may result in termination of proceedings or abandonment of the application or expiration of the patent.

The information provided by you in this form will be subject to the following routine uses:

1. The information on this form will be treated confidentially to the extent allowed under the Freedom of Information Act (5 U.S.C. 552) and the Privacy Act (5 U.S.C. 552a). Records from this system of records may be disclosed to the Department of Justice to determine whether the Freedom of Information Act requires disclosure of these records.

2. A record from this system of records may be disclosed, as a routine use, in the course of presenting evidence to a court, magistrate, or administrative tribunal, including disclosures to opposing counsel in the course of settlement negotiations.

3. A record in this system of records may be disclosed, as a routine use, to a Member of Congress submitting a request involving an individual, to whom the record pertains, when the individual has requested assistance from the Member with respect to the subject matter of the record.

4. A record in this system of records may be disclosed, as a routine use, to a contractor of the Agency having need for the information in order to perform a contract. Recipients of information shall be required to comply with the requirements of the Privacy Act of 1974, as amended, pursuant to 5 U.S.C. 552a(m).

5. A record related to an International Application filed under the Patent Cooperation Treaty in this system of records may be disclosed, as a routine use, to the International Bureau of the World Intellectual Property Organization, pursuant to the Patent Cooperation Treaty.

6. A record in this system of records may be disclosed, as a routine use, to another federal agency for purposes of National Security review (35 U.S.C. 181) and for review pursuant to the Atomic Energy Act (42 U.S.C. 218(c)).

7. A record from this system of records may be disclosed, as a routine use, to the Administrator, General Services, or his/her designee, during an inspection of records conducted by GSA as part of that agency's responsibility to recommend improvements in records management practices and programs, under authority of 44 U.S.C. 2904 and 2906. Such disclosure shall be made in accordance with the GSA regulations governing inspection of records for this purpose, and any other relevant (i.e., GSA or Commerce) directive. Such disclosure shall not be used to make determinations about individuals.

8. A record from this system of records may be disclosed, as a routine use, to the public after either publication of the application pursuant to 35 U.S.C. 122(b) or issuance of a patent pursuant to 35 U.S.C. 151. Further, a record may be disclosed, subject to the limitations of 37 CFR 1.14, as a routine use, to the public if the record was filed in an application which became abandoned or in which the proceedings were terminated and which application is referenced by either a published application, an application open to public inspections or an issued patent.

9. A record from this system of records may be disclosed, as a routine use, to a Federal, State, or local law enforcement agency, if the USPTO becomes aware of a violation or potential violation of law or regulation.

UNITED STATES PATENT AND TRADEMARK OFFICE

Commissioner for Patents
United States Patent and Trademark Office
P.O. Box 1450
Alexandria, VA 22313-1450
www.uspto.gov

In re Patent No. 6903915
Issue Date: June 7,2005
Application No. 10416893
Filed: May 16,2003
Attorney Docket No. 4590-173

:
:DECISION GRANTING PETITION
:UNDER 37 CFR 1.378(c)
:

This is a decision on the electronic petition, filed October 20,2009 ,under 37 CFR 1.378(c) to accept the unintentionally delayed payment of the 3.5 year maintenance fee for the above-identified patent.

The petition is **GRANTED**.

The maintenance fee is accepted, and the above-identified patent reinstated as of October 20,2009 .
This decision also constitutes notice that the fee has been accepted. An electronic copy of the petition and this decision has been created as an entry in the Image File Wrapper. Nevertheless, petitioner should print and retain an independent copy.

Telephone inquiries related to this electronic decision should be directed to the Electronic Business Center at 1-866-217-9197.

UNITED STATES PATENT AND TRADEMARK OFFICE

Commissioner for Patents
United States Patent and Trademark Office
P.O. Box 1450
Alexandria, VA 22313-1450
www.uspto.gov

MERCHANT & GOULD PC
P.O. BOX 2903
MINNEAPOLIS MN 55402-0903

COPY MAILED
AUG 2 6 2008

In re Patent No. 6,836,970 :
Issue Date: 4 January, 2005 :
Application No. 10/416,906 : DECISION
Filed: 29 October, 2003 :
Attorney Docket No. 8373.297USWO

This is a decision on the petition filed on 22 February, 2007, requesting issuance of duplicate Letters Patent for the above-identified patent/application and considered under 37 C.F.R. §1.182.

The Office regrets the delay in addressing the instant matter, however, the matter was presented to the attorneys in the Office of Petitions only at this writing.

The petition is **GRANTED.**

BACKGROUND

Petitioner Brian H. Batzli (Reg. No 32,960) has made demand upon the Office to issue duplicate Letters Patent in the instant matter.

Petitioner has declared that the patent apparently was lost.

Petitioner has demonstrated that the petition fee has been paid as required for the petition under 37 C.F.R. §1.182.

Out of an abundance of caution, Petitioners always are reminded that that those registered to practice and all others who make representations before the Office are reminded to inquire into the underlying facts of representations made to the Office and support averments with the appropriate documentation–since all owe to the Office the continuing duty to disclose.[1]

[1] See supplement of 17 June, 1999. The Patent and Trademark Office is relying on Petitioner's duty of candor and good faith and accepting a statement made by Petitioner. See Changes to Patent Practice and Procedure, 62 Fed. Reg. at 53160 and 53178, 1203 Off. Gaz. Pat. Office at 88

In re Patent No. 6,836,970
Application No. 10/416,906

The availability of applications and application papers online to applicants/practitioners who diligently associate their Customer Number with the respective application(s) now provides an applicant/practitioner on-demand information as to events/transactions in an application.

The Publishing Division is directed to issue duplicate Letters Patent.

A copy of this decision is being forwarded to Publishing Division for issuance of duplicate Letters Patent.

The file is being released to the IFW Repository.

Any questions regarding the issuance of the duplicate Letters Patent should be directed to Ms. Niomi Farmer, Office of Data Management, Office: 703-308-9250x119, Fax: 571-270-9753.

While telephone inquiries regarding this decision may be directed to the undersigned at (571) 272-3214, it is noted that all practice before the Office is in writing (see: 37 C.F.R. §1.2[2]) and the proper authority for action on any matter in this regard are the statutes (35 U.S.C.), regulations (37 C.F.R.) and the commentary on policy (MPEP). Therefore, no telephone discussion may be controlling or considered authority for Petitioner's action(s).

/John J. Gillon, Jr./
John J. Gillon, Jr.
Senior Attorney
Office of Petitions

cc: Ms. Niomi Farmer, ST/8C23 FAX: (571) 270-9753

---

and 103 (responses to comments 64 and 109)(applicant obligated under 37 C.F.R. §10.18 to inquire into the underlying facts and circumstances when providing statements to the Patent and Trademark Office).

[2] The regulations at 37 C.F.R. §1.2 provide:

§1.2 Business to be transacted in writing.
All business with the Patent and Trademark Office should be transacted in writing. The personal attendance of applicants or their attorneys or agents at the Patent and Trademark Office is unnecessary. The action of the Patent and Trademark Office will be based exclusively on the written record in the Office. No attention will be paid to any alleged oral promise, stipulation, or understanding in relation to which there is disagreement or doubt.

24 AUG 2004

#8

UNITED STATES PATENT AND TRADEMARK OFFICE

COMMISSIONER FOR PATENTS
UNITED STATES PATENT AND TRADEMARK OFFICE
P.O. BOX 1450
ALEXANDRIA, VA 22313-1450
www.uspto.gov

SHERIDAN ROSS PC
1560 BROADWAY
SUITE 1200
DENVER, CO 80202

In re Application of MONTBARBON	:	
U.S. Application No.: 10/416,908	:	
PCT Application No.: PCT/GB01/05144	:	DECISION
Int. Filing Date: 22 November 2001	:	
Priority Date Claimed: 22 November 2000	:	
Attorney Docket No.: 7096SO-17	:	
For: MARINE RISER SYSTEM	:	

This is in response to applicant's "Letter Re: Request for Status of Application" filed 17 August 2004, which is being treated as a petition under 37 CFR 1.10(e). No petition fee is due.

BACKGROUND

On 22 November 2001, applicant filed international application PCT/GB01/05144, which claimed priority of an earlier United States application filed 22 November 2000. A copy of the international application was communicated to the USPTO from the International Bureau on 30 May 2002. The thirty-month period for paying the basic national fee in the United States expired on 22 May 2003.

On 14 May 2003, applicant filed national stage papers in the United States Designated/Elected Office (DO/EO/US) including, *inter alia*, the requisite basic national fee.

On 25 August 2003, the DO/EO/US mailed a Notification of Missing Requirements Under 35 U.S.C. 371 (Form PCT/DO/EO/905), which indicated that an executed declaration must be submitted.

On 07 November 2003, applicant purportedly filed an executed declaration via the Express Mail Post Office to Addressee service of the USPS ("Express Mail").

On 17 August 2004, applicant filed the present petition under 37 CFR 1.10(e).

DISCUSSION

37 CFR 1.10(e) states,

> Any person mailing correspondence addressed as set out in 1.1(a) to the Office with sufficient postage utilizing the Express Mail Post Office to Addressee service of the USPS but not received by the Office, may petition the Commissioner to consider such correspondence filed in the Office on the USPS deposit date, provided that:
>
> (1) The petition is filed promptly after the person becomes aware that the Office has no evidence of receipt of the correspondence;
>
> (2) The number of the Express Mail mailing label was placed on the paper(s) or fee(s) that constitute the correspondence prior to the original mailing by Express Mail;
>
> (3) The petition includes a copy of the originally deposited paper(s) or fee(s) that constitute the correspondence showing the number of the Express Mail mailing label thereon, a copy of any returned postcard receipt, a copy of the Express Mail mailing label showing the date-in, a copy of any other official notation by the USPS relied upon to show the date of deposit, and, if the requested filing date is a date other than the date-in on the Express Mail mailing label or other official notation entered by the USPS, a showing pursuant to paragraph (d)(3) of this section that the requested filing date was the date the correspondence was deposited in the Express Mail Post Office to Addressee service prior to the last scheduled pickup for that day; and
>
> (4) The petition includes a statement which establishes, to the satisfaction of the Commissioner, the original deposit of the correspondence and that the copies of the correspondence, the copy of the Express Mail mailing label, the copy of any returned postcard receipt, and any official notation entered by the USPS are true copies of the originally mailed correspondence, original Express Mail mailing label, returned postcard receipt, and official notation entered by the USPS.

With regard to item (1) above, the petition was filed promptly after applicant became aware that the USPTO has no evidence of receipt of the correspondence in question.

With regard to item (2) above, the Express Mail mailing label number appears on the copy of the correspondence.

With regard to item (3) above, applicant has provided a copy of the originally deposited papers and a copy of the Express Mail label showing a "date-in" of 07 November 2003.

With regard to item (4) above, the petition includes a sufficient statement that the correspondence was deposited on the date of notation by the USPS and that the copies of the correspondence and Express Mail mailing label are true copies of the originally mailed correspondence.

CONCLUSION

For the reasons above, the petition under 37 CFR 1.10(e) is GRANTED.

The application has an International Filing Date under 35 U.S.C. 363 of 22 November 2001, and a date under 35 U.S.C. 371(c)(1), (c)(2) and (c)(4) of 07 November 2003.

This application is being forwarded to the United States Designated/Elected Office (DO/EO/US) for further processing in accordance with this decision.

Bryan Tung
PCT Legal Examiner
Office of PCT Legal Administration

Telephone: 703-308-6614
Facsimile: 703-308-6459

UNITED STATES PATENT AND TRADEMARK OFFICE

Commissioner for Patents
United States Patent and Trademark Office
P.O. Box 1450
Alexandria, VA 22313-1450
www.uspto.gov

Martin D. Moynihan
PRTSI, Inc.
P. O. Box 16446
Arlington VA 22215

COPY MAILED

JUL 0 7 2008

OFFICE OF PETITIONS

In re Application of	:	
Yair Reisner	:	
Application No. 10/416,916	:	DECISION DISMISSING PETITIONS
Filed: May 16, 2003	:	UNDER 37 CFR 1.78(a)(3) AND (a)(6)
Attorney Docket No. 25850	:	

This is a decision on the petition under 37 CFR §§ 1.78(a)(3) and 1.78(a)(6), filed December 5, 2007, to accept an unintentionally delayed claim under 35 U.S.C. §§ 120 and 119(e) for the benefit of priority to the prior-filed nonprovisional and provisional applications set forth in the concurrently filed amendment.

The petition is **DISMISSED**

A petition for acceptance of a claim for late priority under 37 CFR §§ 1.78(a)(3) and 1.78(a)(6) is only applicable to those applications filed on or after November 29, 2000 and after the expiration of the period specified in 37 CFR §§ 1.78(a)(2)(ii) and 1.78(a)(5)(ii). In addition, the petition under 37 CFR §§ 1.78(a)(3) and 1.78(a)(6) must be accompanied by:

(1) the reference required by 35 U.S.C. §§ 120 and 119(e) and 37 CFR §§ 1.78(a)(2)(i) and 1.78(a)(5)(i) of the prior-filed application, unless previously submitted;
(2) the surcharge set forth in § 1.17(t); and
(3) a statement that the entire delay between the date the claim was due under 37 CFR §§ 1.78(a)(2)(ii) and 1.78(a)(5)(ii) and the date the claim was filed was unintentional. The Director may require additional where there is a question whether the delay was unintentional.

The petition does not comply with item (1).

References to prior-filed non-provisional and provisional applications were included in an amendment to the beginning of the specification following the title. However, the amendment is

not acceptable as drafted since it improperly incorporates by reference the prior-filed applications. An incorporation by reference statement added after an application's filing date is not effective because no new matter can be added to an application after its filing date (*see* 35 U.S.C. § 132(a)). If an incorporation by reference statement is included in an amendment to the specification to add a benefit claim under 35 U.S.C. §§ 120 or 119(e) after the filing date of the application, the amendment would not be proper. When a benefit claim under 35 U.S.C. §§ 120 or 119(e) is submitted after the filing of an application, the reference to the prior application cannot include an incorporation by reference statement of the prior application. *See* Dart Industries v. Banner, 636 F.2d 684, 207 USPQ 273 (C.A.D.C. 1980). *Note* MPEP §§ 201.06(c) and 608.04(b).

Before the petition under 37 CFR §§ 1.78(a)(3) and 1.78(a)(6) can be granted, a renewed petition and either an Application Data Sheet or a substitute amendment (complying with the provisions of 37 CFR 1.121 and 37 CFR 1.76(b)(5)) to correct the above matters are required.

Further correspondence with respect to this matter should be addressed as follows:

By mail: Mail Stop PETITIONS
Commissioner for Patents
Post Office Box 1450
Alexandria, VA 22313-1450

By hand: Customer Service Window
Mail Stop Petitions
Randolph Building
401 Dulany Street
Alexandria, VA 22314

By fax: (571) 273-8300
ATTN: Office of Petitions

Any questions concerning this matter may be directed to Christopher Bottorff at (571) 272-6692.

David Bucci
Petitions Examiner
Office of Petitions

UNITED STATES PATENT AND TRADEMARK OFFICE

Commissioner for Patents
United States Patent and Trademark Office
P.O. Box 1450
Alexandria, VA 22313-1450
www.uspto.gov

Martin D. Moynihan
PRTSI, Inc.
P. O. Box 16446
Arlington VA 22215

COPY MAILED

OCT 09 2008

OFFICE OF PETITIONS

In re Application of	:	
Yair Reisner	:	
Application No. 10/416,916	:	DECISION DISMISSING PETITIONS
Filed: May 16, 2003	:	UNDER 37 CFR 1.78(a)(3) AND (a)(6)
Attorney Docket No. 25850	:	

This is a decision on the renewed petition under 37 CFR §§ 1.78(a)(3) and 1.78(a)(6), filed August 4, 2008, to accept an unintentionally delayed claim under 35 U.S.C. §§ 120 and 119(e) for the benefit of priority to the prior-filed nonprovisional and provisional applications set forth in the concurrently filed amendment.

The petition is **DISMISSED**

A petition for acceptance of a claim for late priority under 37 CFR §§ 1.78(a)(3) and 1.78(a)(6) is only applicable to those applications filed on or after November 29, 2000 and after the expiration of the period specified in 37 CFR §§ 1.78(a)(2)(ii) and 1.78(a)(5)(ii). In addition, the petition under 37 CFR §§ 1.78(a)(3) and 1.78(a)(6) must be accompanied by:

(1) the reference required by 35 U.S.C. §§ 120 and 119(e) and 37 CFR §§ 1.78(a)(2)(i) and 1.78(a)(5)(i) of the prior-filed application, unless previously submitted;
(2) the surcharge set forth in § 1.17(t); and
(3) a statement that the entire delay between the date the claim was due under 37 CFR §§ 1.78(a)(2)(ii) and 1.78(a)(5)(ii) and the date the claim was filed was unintentional. The Director may require additional information where there is a question whether the delay was unintentional.

The petition does not comply with item (1).

The amendment as drafted is unacceptable and, therefore, is not considered a proper reference under 37 CFR 1.78(a)(2)(i). In this regard, the amendment does not include proper markings for the changes that are made and, as such, does not comply with 37 CFR 1.121(b)(1).

Before the petition under 37 CFR §§ 1.78(a)(3) and 1.78(a)(6) can be granted, a renewed petition and either an Application Data Sheet or a substitute amendment (complying with the provisions of 37 CFR 1.121 and 37 CFR 1.76(b)(5)) to correct the above matters are required.

Also, further review of the priority claimed has revealed that appropriate references are not made in each intermediate application in the chain of prior applications. In particular, U.S. Patent Application No. 10/169,028 does not properly reference U.S. Patent Application No. 09/477,737. Such a reference is required. *See* MPEP 201.11(III)(C). In order for the present application to have the benefit of the filing date of U.S. Patent Application No. 09/477,737 (January 5, 2000), U.S. Patent Application No. 10/169,028, now U.S. Patent No. 6,544,506, must be corrected to include the proper reference to U.S. Patent Application No. 09/477,737. Since U.S. Patent Application No. 10/169,028 was filed after November 29, 2000, a petition under 37 CFR 1.78(a)(3), along with submission of a Certificate of Correction, is the appropriate avenue of relief to accept a late claim for the benefit of priority to a prior-filed nonprovisional application after issuance of the application into a patent. *See* MPEP 1481.

Further correspondence with respect to this matter should be addressed as follows:

By mail: Mail Stop PETITIONS
Commissioner for Patents
Post Office Box 1450
Alexandria, VA 22313-1450

By hand: Customer Service Window
Mail Stop Petitions
Randolph Building
401 Dulany Street
Alexandria, VA 22314

By fax: (571) 273-8300
ATTN: Office of Petitions

Any questions concerning this matter may be directed to Christopher Bottorff at (571) 272-6692.

David Bucci
Petitions Examiner
Office of Petitions

UNITED STATES PATENT AND TRADEMARK OFFICE

Commissioner for Patents
United States Patent and Trademark Office
P.O. Box 1450
Alexandria, VA 22313-1450
www.uspto.gov

Martin D. Moynihan
PRTSI, Inc.
P. O. Box 16446
Arlington VA 22215

COPY MAILED

FEB 0 3 2009

OFFICE OF PETITIONS

In re Application of	:	
Yair Reisner	:	
Application No. 10/416,916	:	DECISION DISMISSING PETITIONS
Filed: May 16, 2003	:	UNDER 37 CFR 1.78(a)(3) AND (a)(6)
Attorney Docket No. 25850	:	

This is a decision on the renewed petition under 37 CFR §§ 1.78(a)(3) and 1.78(a)(6), filed November 28, 2008, to accept an unintentionally delayed claim under 35 U.S.C. §§ 120 and 119(e) for the benefit of priority to the prior-filed nonprovisional and provisional applications set forth in the concurrently and previously filed amendment.

The petition is **DISMISSED**

A petition for acceptance of a claim for late priority under 37 CFR §§ 1.78(a)(3) and 1.78(a)(6) is only applicable to those applications filed on or after November 29, 2000 and after the expiration of the period specified in 37 CFR §§ 1.78(a)(2)(ii) and 1.78(a)(5)(ii). In addition, the petition under 37 CFR §§ 1.78(a)(3) and 1.78(a)(6) must be accompanied by:

(1) the reference required by 35 U.S.C. §§ 120 and 119(e) and 37 CFR §§ 1.78(a)(2)(i) and 1.78(a)(5)(i) of the prior-filed application, unless previously submitted;
(2) the surcharge set forth in § 1.17(t); and
(3) a statement that the entire delay between the date the claim was due under 37 CFR §§ 1.78(a)(2)(ii) and 1.78(a)(5)(ii) and the date the claim was filed was unintentional. The Director may require additional information where there is a question whether the delay was unintentional.

The petition does not comply with item (1).

The amendment as drafted is unacceptable and, therefore, is not considered a proper reference under 37 CFR 1.78(a)(2)(i). In this regard, the amendment does not include proper markings for the changes that are made and, as such, does not comply with 37 CFR 1.121(b)(1). Previously, the reference included in the first three lines a benefit claim to a provisional application and stated:

> "This Application is a National Phase of PCT Patent Application No. PCT/IL01/01101 filed on November 29, 2001, which claims the benefit of US Provisional Patent Application No. 60/253,984 filed on November 30, 2000."

This statement was omitted in the amendment accompanying the present renewed petition and no markings were used to identify the change. Before the petition under 37 CFR §§ 1.78(a)(3) and 1.78(a)(6) can be granted, a renewed petition and either an Application Data Sheet or a substitute amendment (complying with the provisions of 37 CFR 1.121 and 37 CFR 1.76(b)(5)) to correct the above matters are required.

Also, there is a defect in the priority claim in U.S. Patent Application No. 10/169,028. U.S. Patent Application No. 10/169,028 does not properly reference U.S. Patent Application No. 09/477,737. As noted in the Decision on Petition mailed January 5, 2007 in U.S. Patent Application No. 10/169,028 dismissing the request under 37 CFR 1.78(a)(3), the relationship (i.e.: continuation, divisional, etc.) between 09/477,737 to 10/169,028 is not stated. Such a reference is required. *See* MPEP 201.11(III)(A) and (C). Thus, the reference in patent 7,270,810 is not proper. In order for the present application to have the benefit of the filing date of U.S. Patent Application No. 09/477,737 (January 5, 2000), U.S. Patent Application No. 10/169,028, now U.S. Patent No. 7,270,810, must be corrected to include the proper reference to U.S. Patent Application No. 09/477,737.

Further correspondence with respect to this matter should be addressed as follows:

By mail:	Mail Stop PETITIONS Commissioner for Patents Post Office Box 1450 Alexandria, VA 22313-1450
By hand:	Customer Service Window Mail Stop Petitions Randolph Building 401 Dulany Street Alexandria, VA 22314
By fax:	(571) 273-8300 ATTN: Office of Petitions

Any questions concerning this matter may be directed to Christopher Bottorff at (571) 272-6692.

David Bucci
Petitions Examiner
Office of Petitions

UNITED STATES PATENT AND TRADEMARK OFFICE

Commissioner for Patents
United States Patent and Trademark Office
P.O. Box 1450
Alexandria, VA 22313-1450
www.uspto.gov

MERCHANT & GOULD PC
P.O. BOX 2903
MINNEAPOLIS MN 55402-0903

COPY MAILED

JUL 17 2007

OFFICE OF PETITIONS

In re Application of
Brendan Kemp, et al.
Application No. 10/416,930
Filed: August 18, 2003
Attorney Docket No. 9374.34USWO

DECISION ON PETITION
TO WITHDRAW
FROM RECORD

This is a decision on the Request to Withdraw as attorney or agent of record under 37 C.F.R. § 1.36(b) filed January 22, 2007.

The request is **APPROVED**.

A grantable request to withdraw as attorney/agent of record must be signed by every attorney/agent seeking to withdraw or contain a clear indication that one attorney is signing on behalf of another/others. A request to withdraw will not be approved unless at least 30 (thirty) days would remain between the date of approval and the later of the expiration date of a time to file a response or the expiration date of the maximum time period which can be extended under 37 C.F.R. § 1.136(a).

The request was signed by Sara M. Monfeldt on behalf of herself.

Sara M. Monfeldt has been withdrawn as attorney; all other attorneys remain of record.

The correspondence address of record remains unchanged.

Telephone inquiries concerning this decision should be directed to undersigned at 571-272-1642.

April M. Wise
Petitions Examiner
Office of Petitions

UNITED STATES PATENT AND TRADEMARK OFFICE

UNITED STATES DEPARTMENT OF COMMERCE
United States Patent and Trademark Office
Address: COMMISSIONER FOR PATENTS
P.O. Box 1450
Alexandria, Virginia 22313-1450
www.uspto.gov

MYERS BIGEL SIBLEY & SAJOVEC
PO BOX 37428
RALEIGH, NC 27627

Mail Date: 04/21/2010

Applicant	: Yuri Gleba	: DECISION ON REQUEST FOR
Patent Number	: 7652194	: RECALCULATION of PATENT
Issue Date	: 01/26/2010	: TERM ADJUSTMENT IN VIEW
Appliction No	: 10/416,931	: OF WYETH AND NOTICE OF INTENT TO
Filed	: 12/24/2003	: ISSUE CERTIFICATE OF CORRECTION
		:

The Request for Recalculation is **GRANTED** to the extent indicated.

The patent term adjustment has been determined to be **525** days. The USPTO will *sua sponte* issue a certificate of correction reflecting the amount of PTA days determined by the recalculation.

Prior to the issuance of the certificate of correction, the USPTO will afford patentee an opportunity to be heard and request reconsideration. Accordingly, patentee has **one month or thirty (30) days**, whichever is longer, to file a request for reconsideration of this patent term adjustment calculation. See 35 U.S.C. 154(b)(3)(B)(ii) and 37 CFR 1.322(a)(4). No extensions of time will be granted under 37 CFR 1.136.

Patentee should use document code PET.OP if electronically filing a request for reconsideration of this patent term adjustment calculation. The patentee must also include the information required by 37 CFR 1.705(b)(2) and the fee required by 37 CFR 1.18(e). If patentee does not file a timely request for reconsideration of this patent term adjustment calculation including the information required by 37 CFR 1.705(b)(2) and the fee required by 37 CFR 1.18(e), the USPTO will issue a certificate of correction reflecting the PTA determination noted above.

Patentee should be aware that in order to preserve the right to review in the United States District Court for the District of Columbia of the USPTO patent term adjustment determination, patentee must ensure that he or she also take the steps required under 35 U.S.C. 154(b)(4)(A) in a timely manner. Nothing in the request for recalculation should be construed as providing an alternative time frame for commencing a civil action under 35 U.S.C. 154(b)(4)(A).

Any questions concerning this decision should be directed to the Office of Patent Legal Administration at 571-272-7702.

UNITED STATES PATENT AND TRADEMARK OFFICE

Commissioner for Patents
United States Patent and Trademark Office
PO Box 1450
Alexandria, VA 22313-1450

26 SEP 2003

Kate H. Murashige
Morrison & Foerster LLP
3811 Valley Centre, Suite 500
San Diego, CA 92130

In re Application of Holtzman US Application No.: 10/416,938 PCT Application No.: PCT/US01/45244 International Filing Date: 23 October 2001 Priority Date: 24 October 2000 Attorney's Docket No.: 295002006500 For: METHODS FOR AMELIORATING CHILDHOOD INFECTIONS	DECISION ON PETITION FOR REVIVAL UNDER 37 CFR 1.137(b)

The petition to revive under 37 CFR 1.137(b), filed on 14 May 2003 in the above-captioned application, is hereby GRANTED as follows.

On 23 October 2001, Applicant filed international application PCT/US01/45244, which claimed priority of an earlier U.S. provisional application filed on 24 October 2000. The period for paying the basic national fee is 30 months and ended at midnight on 24 April 2003.

The basic national fee was not submitted on or before 24 April 2003. The international application became abandoned as to the United States on 25 April 2003.

The instant petition is accompanied by, *inter alia*:

(1) A transmittal letter for entry into the national stage in the United States under 35 U.S.C. 371, authorizing the USPTO to charge the $375 basic national fee (small entity) required by 35 U.S.C. 371(c)(1) and 37 CFR 1.492(a)(2) to Deposit Account No. 03-1952;

(2) An authorization for the USPTO to charge the $650 petition fee (small entity) to the same deposit account;

(3) A statement to the effect that the entire delay in filing the basic national fee from its due date until the filing of the instant petition under 37 CFR 1.137(b) was unintentional.

Moreover, a terminal disclaimer is not applicable in the instant case.

The request to revive the application abandoned under 35 U.S.C. 371(d) is granted as to the national stage in the United States of America.

Applicant's claim for priority is acknowledged. The application has an international filing date of 23 October 2001 under 35 U.S.C. 363.

The application is being returned to the National Stage Processing Division of the Office of PCT Operations for continued processing, including mailing of a Notification of Missing Requirements under 35 U.S.C. 371, requiring an oath or declaration in compliance with 37 CFR 1.497(a)-(b).

Richard Cole
PCT Legal Examiner
PCT Legal Office

RC Tang
Petitions Attorney
PCT Legal Office
Telephone: 703-308-1315
Facsimile: 703-308-6459

UNITED STATES PATENT AND TRADEMARK OFFICE

Commissioner for Patents
United States Patent and Trademark Office
P.O. Box 1450
Alexandria, VA 22313-1450
www.uspto.gov

DEC 28 2004

MERCHANT & GOULD PC
P.O. BOX 2903
MINNEAPOLIS MN 55402-0903

In re Application of	:
Christian Bendixenet al	:
Serial No.: 10/416,941	: PETITION TO MAKE SPECIAL
Filed: October 9, 2003	:
Attorney Docket No.: 12845.11	:

This is in response to applicants' petition filed December 2, 2004, to make the above-identified application special under the provisions of 37 CFR 1.102(d).

Applicant has satisfied the provisions set forth in M.P.E.P. 708.02, VIII. Therefor the petition is **GRANTED**.

The following condition applies to the grant of this petition: If, upon examination, it is determined that a restriction requirement is necessary because of multiple inventions being claimed, applicant will be required to make an election without traverse of a single invention to be prosecuted. Failure to make an election without traverse will void the special status accorded in this decision.

The application will be forwarded the examiner for action on the merits commensurate with this decision.

Should there be any questions with regard to this letter please contact William R. Dixon, Jr. by letter addressed to the Director, Technology Center 1600, P.O. Box 1450, Alexandria, VA 22313-1450, or by telephone at 571-272-0519 or by facsimile transmission at the general Office facsimile number, 571-273-8300.

William R. Dixon, Jr.
Special Program Examiner
Technology Center 1600