UNITED STATES PATENT AND TRADEMARK OFFICE

Commissioner for Patents
United States Patent and Trademark Office
P.O. Box 1450
Alexandria, VA 22313-1450
www.uspto.gov

27 NOV 2006

Marshall, Gerstein & Borun LLP
233 S. Wacker Drive, Suite 6300
Sears Tower
Chicago, IL 60606

In re Application of	:	
GHANEM, Ghanem Ellas et al.	:	
Application No.: 10/518,610	:	DECISION
PCT No.: PCT/CH03/00409	:	
Int. Filing Date: 23 June 2003	:	ON PETITION UNDER
Priority Date: 24 June 2002	:	
Docket No.: 27656/40760	:	37 CFR 1.47(a)
For: DRUG TRANSPORT AND DELIVERY SYSTEM	:	

This decision is in response to Petition Under 37 CFR 1.47(a), filed 11 September 2006.

On 16 June 2005, applicants submitted a declaration of the inventors in compliance with 37 CFR 1.497(a)-(b). The declaration is required by 37 CFR 1.497(a) to identify the specification to which it is directed. While it is preferable for the declaration to use the international application number and the international filing date, it is not required. The declaration identified the specification to which it was directed by listing the US serial number assigned to the national phase of PCT/CH03/00409.

The 29 March 2006 Notification of Missing Requirements (Form PCT/DO/EO/905) issued in error. It is hereby **VACATED**.

The fees for the petition under 37 CFR 1.47(a) and for the four month extension of time will be refunded to deposit account no. 13-2855, as authorized.

For the reasons discussed above, the petition under 37 CFR 1.47(a) is **DISMISSED AS MOOT**.

The application has a date under 35 U.S.C. 371(c)(1), (c)(2) and (c)(4) of 16 June 2005. This application is being referred to the National Phase Processing Branch of the Division of PCT Operations for further processing consistent with this decision.

Erin P. Thomson

Erin P. Thomson
Attorney Advisor
PCT Legal Administration

Telephone: 571-272-3292
Facsimile: 571-273-0459

UNITED STATES PATENT AND TRADEMARK OFFICE

Commissioner for Patents
United States Patent and Trademark Office
P.O. Box 1450
Alexandria, VA 22313-1450
www.uspto.gov

10-18-07

Serial No. :10/518614
Patent No. : 7,259,743 B2
Inventor(s) :Salvatore Pappalardo, et al.
Issued : August 21, 2007
Title : SYSTEM FOR DRIVING COLUMNS OF A LIQUID CRYSTAL DISPLAY

Re: Request for Certificate of Correction

Consideration has been given your request for the issuance of a certificate of correction for the above-identified patent under the provisions of 37 CFR 1.322 and/or 1.323.

Assignees' names and addresses (assignment data) printed in a patent are based *solely* on information supplied in the appropriate space for identifying the assignment data, i.e., item 3 of the Fee(s) Transmittal Form PTOL-85B. After payment of the issue fee, correction of assignment data submitted on the PTOL-85B can only be done by Certificate of Correction under 37 CFR 1.323, with a request under 37 CFR 3.81(b).
A request for a patent to be corrected to state the name of the assignee must:

A. state that the assignment was submitted for recordation as set forth in 37 CFR 3.11 before issuance of the patent;
B. include a request for a certificate of correction under 37 CFR 1.323 along with the fee set forth in 37 CFR 1.20(a); and
C. include the processing fee set forth in 37 CFR 1.17(i).

If the request is granted, Certificates of Correction Branch will be notified that a Certificate of Correction may be issued.
See Manual of Patent Examining Procedure, Section 1481.01 (Rev. 3) (Oct. 2005).

Applicant has not included items A and or C above, accordingly, the request for Certificate of Correction to add or change the assignee data is dismissed.
Any request under 37 CFR 3.81(b) should be directed to the following address or facsimile number:

By mail: Mail Stop PETITIONS
Commissioner for Patents
Post Office Box 1450
Alexandria, VA 22313-1450

By hand: Customer Service Window
Mail Stop Petitions
Randolph Building
40l Dulany Street
Alexandria, VA 22314

By fax: 571-273-8300
ATTN: Office of Petitions

If a fee (currently $100) was previously submitted for consideration of a Request for Certificate of Correction, under CFR 1.323, to correct assignment data, no additional fee is required.

Magdalene Talley
For Cecelia Newman
Decisions & Certificates
of Correction Branch
(703) 308-9390 –Fax 571-270-9942

Hogan & Hartson LLP
c/o Carol W. Burton
1200 17th Street, Ste. 1500
Denver, CO 80202

/mt

UNITED STATES PATENT AND TRADEMARK OFFICE

Commissioner for Patents
United States Patent and Trademark Office
P.O. Box 1450
Alexandria, VA 22313-1450
www.uspto.gov

HOGAN & HARTSON LLP
ONE TABOR CENTER, SUITE 1500
1200 SEVENTEENTH ST
DENVER CO 80202

COPY MAILED

DEC 28 2007

OFFICE OF PETITIONS

In re Application of	:	
Pappalardo et al.	:	
Application No. 10/518614	:	DECISION
Filing or 371(c) Date: 12/23/2004	:	ON PETITION
Patent No.: 7259743	:	
Issue Date: 08/21/2007	:	
Attorney Docket No.: 01-CT-334/DP	:	

This is a decision on the correspondence entitled "Renewed Petition for Certificate of Correction," filed November 1, 2007, to correct the name of the assignee on the front page of the above-identified patent by way of a Certificate of Correction. The delay in treating this petition is regretted.

The Petition is **granted**.

The petition was accompanied by a certificate of correction as required by 3.81(b), and the fee submitted with the present petition. Further, Office assignment records reflect that STMicroelectronics, S.R.L., and Dora S.P.A., are the assignees of record. As the request complies with the provisions of 37 CFR 3.81(b), it would be appropriate for a certificate of correction to be processed.

Telephone inquiries concerning this matter should be directed to the undersigned at (571) 272-3232. Any questions concerning the issuance of the Certificate of Correction should be directed to the Certificate of Correction Branch at (571) 272-4200.

This matter is being referred to the Certificates of Correction Branch for processing of a certificate of correction after issuance of this application into a patent.

Derek L. Woods
Attorney
Office of Petitions

#6

UNITED STATES PATENT and TRADEMARK OFFICE

COMMISSIONER FOR PATENTS
UNITED STATES PATENT AND TRADEMARK OFFICE
P.O BOX 1450
ALEXANDRIA, VA 22313-1450
www.uspto.gov

27 JAN 2006

Jennifer H. Hamilton
THE ECLIPSE GROUP
10453 Raintree Lane,
Northridge, CA 91326

In re Application of	DECISION ON
Orler et al	
PCT No.: PCT/US2003/019363	
Application No: 10/518,621	
Int. Filing Date: 18 June 2003	PETITION UNDER
Priority Date: 20 June 2002	
Attorney's Docket No.: ST02017USU3 (141-US-U3)	
For: GENERIC SATELLITE POSITIONING ...	
SELECTABLE INPUTS AND OUTPUTS	37 CFR 1.47(a)

This is in response to the "Declaration of Francisco A. Rubio-Campos" filed on 25 October 2005, which is being treated as a petition under 37 CFR 1.47(a). The petition fee of $200.00 has been charged to Deposit Account Number 502542 as stipulated in the petition transmitter letter.

BACKGROUND

On 18 June 2003, petitioner filed international application PCT/US2003/019363, which claimed priority to an earlier application filed 20 June 2002. The thirty-month (30) time period for paying the basic national fee in the United States of America expired at midnight on 20 December 2004.

On 20 December 2004, petitioner filed in the United States Patent & Trademark Office a transmittal letter for entry into the national stage in the U.S. under 35 U.S.C. 371, which was accompanied by, inter alia, the U.S. basic national fee. No executed oath or declaration accompanied the above papers.

On 05 May 2005, the United States Designated/Elected Office (DO/EO/US) mailed a "NOTIFICATION OF MISSING REQUIREMENTS UNDER 35 U.S.C. 371 IN THE UNITED STATES DESIGNATED/ELECTED OFFICE (DO/EO/US)" (Form PCT/DO/EO/905) which informed applicant, inter alia, that an "Oath or Declaration of the inventors, in compliance with 37 CFR 1.497(a), and (b), identifying the application by International application number and international filing date. The notification stated that the current oath or declaration, in compliance with 37 CFR 1.497(a) and (b), identifying the application by the International application number and international filing date, and that a $65 surcharge for providing the oath or declaration later than 30 months from the priority date (37 CFR 1.492(e)) is required.

On 25 October 2005, petitioner filed the present petition, a declaration by Francisco A. Rubio-Campos in support of filing on behalf of omitted inventor Keith Jacob Brodie accompanied, inter alia, an executed Declaration without the signature of Keith Jacob Brodie.

DISCUSSION

PETITION UNDER 37 CFR 1.47(a):

A petition under 37 CFR 1.47(a) must be accompanied by (1) the fee under 37 CFR 1.17(g), (2) factual proof that the missing joint inventor refuses to execute the application or cannot be reached after diligent effort, (3) a statement of the last known address of the missing inventor, and (4) an oath or declaration by each 37 CFR 1.47(a) applicant on his or her own behalf and on behalf of the non-signing joint inventor.

Furthermore, section 409.03(d) of the Manual of Patent Examining Procedure (M.P.E.P.) **Proof of Unavailability or Refusal**, the relevant sections states, in part:

> **REFUSAL TO JOIN:**
>
> A refusal by an inventor to sign an oath or declaration when the inventor has not been presented with the application papers does not itself suggest that the inventor is refusing to join the application unless it is clear that the inventor understands exactly what he or she is being asked to sign and refuses to accept the application papers. A copy of the application papers should be sent to the last known address of the nonsigning inventor, or, if the nonsigning inventor is represented by counsel, to the address of the nonsigning inventor's attorney.
>
> Where a refusal of the inventor to sign the application papers is alleged, the circumstances of the presentation of the application papers and of the refusal must be specified in a statement of facts by the person who presented the inventor with the application papers and/or to whom the refusal was made. Statements by a party not present when an oral refusal is made will not be accepted.
>
> Proof that a *bona fide* attempt was made to present a copy of the application papers (specification, including claims, drawings, and oath or declaration) to the nonsigning inventor for signature, but the inventor refused to accept delivery of the papers or expressly stated that the application papers should not be sent, may be sufficient. When there is an express oral refusal, that fact along with the time and place of the refusal must be stated in the statement of facts. When there is an express written refusal, a copy of the document evidencing that refusal must be made part

> of the statement of facts. The document may be redacted to remove material not related to the inventor's reasons for refusal.
>
> When it is concluded by the **37 CFR 1.47** applicant that a nonsigning inventor's conduct constitutes a refusal, all facts upon which that conclusion is based should be stated in the statement of facts in support of the petition or directly in the petition. If there is documentary evidence to support facts alleged in the petition or in any statement of facts, such evidence should be submitted. Whenever a nonsigning inventor gives a reason for refusing to sign the application oath or declaration, that reason should be stated in the petition.

Petitioner has satisfied requirements (1) and (3) - (4) of 37 CFR 1.47(a) but not requirement (2).

Regarding requirement (1), petitioner has provided the fee under 37 CFR 1.17(g).

Regarding requirement (2), Mr. Rubio-Campos' declaration states that on or about August 19, 2005, the firm sent an e-mail to inventor Keith Jacob Brodie that he sign and return the Combined Declaration and Power of Attorney, and that his response was that he would sign the documents once he received the money.

However, it has not been sufficiently demonstrated that a copy of the application papers were presented to the nonsigning inventor. It is unclear what documents were forwarded to Mr. Brodi because Mr. Rubi-Campos' statement only discusses the declaration and does not refer to a copy of the application papers (specification, including claims, drawings, and oath or declaration) as required under MPEP. 409.03(d) being sent to him. In addition, no documentary evidence to support this assertion has been provided such as a registered returned envelope, a certified mail return receipt, etc..., to show that the letters were sent to Mr. Brodi or the e-mail response by Brodie. Consequently, it is unclear if he actually received the documents.

Moreover, it is not clear from the petition that it was Mr. Rubio-Campos who performed the items listed in paragraph 5 of his declaration, and has first hand knowledge of those facts as required by MPEP Section 409.03(d). If Mr. Rubio-Campos was not the person who performed the actions listed in paragraph 5, petitioner will need to submit statements, with specific facts on the actions referred to by paragraph 5 by person(s) who has first-hand knowledge of such facts.

Accordingly, the steps enumerated by Mr. Rubio-Campos are not sufficient to establish that Mr. Brodie has refused to sign the declaration.

Regarding requirement (3), although petitioner has provided a statement of the last known address of the missing inventor.

Regarding requirement (4), petitioner has provided an executed declaration signed by Mr. Orler, and Mr. Norman on their behalf and on the behalf of the nonsigning joint inventor Keith Jacob Brodie.

Consequently, the petition does not satisfy all the requirements under 37 CFR 1.47(a).

CONCLUSION

The petition under 37 CFR 1.47(a) is **DISMISSED** without prejudice.

If reconsideration of the merits of the petition under 37 CFR 1.47(a) is desired, applicant must file a request for reconsideration within **TWO (2) MONTHS** from the mail date of this Decision. Any reconsideration request should include a cover letter entitled "Renewed Petition Under 37 CFR 1.47(a)." Extensions of time are available under 37 CFR 1.136(a). Failure to timely file the proper response will result in ABANDONMENT.

Any further correspondence with respect to this matter should be addressed to the Mail Stop PCT, Commissioner for Patents, Office of PCT Legal Administration, P.O. Box 1450, Alexandria, Virginia 22313-1450, with the contents of the letter marked to the attention of the Office of PCT Legal Administration.

Rafael Bacares
PCT Legal Examiner
PCT Legal Office
Telephone: (571) 272-3276
Facsimile: (571) 273-0459

#8

UNITED STATES PATENT and TRADEMARK OFFICE

COMMISSIONER FOR PATENTS
UNITED STATES PATENT AND TRADEMARK OFFICE
P.O BOX 1450
ALEXANDRIA, VA 22313-1450
www.uspto.gov

19 JUL 2006

Jennifer H. Hamilton
THE ECLIPSE GROUP
10453 Raintree Lane,
Northridge, CA 91326

In re Application of	DECISION ON RENEWED
Orler et al	
PCT No.: PCT/US2003/019363	
Application No: 10/518,621	
Int. Filing Date: 18 June 2003	PETITION UNDER
Priority Date: 20 June 2002	
Attorney's Docket No.: ST02017USU3 (141-US-U3)	
For: GENERIC SATELLITE POSITIONING ...	
SELECTABLE INPUTS AND OUTPUTS	37 CFR 1.47(a)

This is in response to the "RENEWED PETITION UNDER 37 C.F.R. §1.47(a)" filed on 30 May 2006.

BACKGROUND

In a decision from this Office on 27 January 2006, the initial petition under 37 CFR 1.47(a) was dismissed. The decision stated that requirement (2) had not been satisfied.

On 30 May 2005, petitioner submitted a "Renewed Petition Under 37 CFR 1.47(a)" requesting reconsideration of the Office's decision of 27 January 2006 with respect to accepting the above application without the signature of nonsigning inventor Keith Jacob Brodie. Filed with the renewed petition, *inter alia*, is a declaration from Mariana Paula Noli and Certified Mail, Return Receipt.

DISCUSSION

A petition under 37 CFR 1.47(a) must be accompanied by: (1) the fee under 37 CFR 1.17(h), (2) factual proof that the missing joint inventor refuses to execute the application or cannot be reached after diligent effort, (3) a statement of the last known address of the missing inventor, and (4) an oath or declaration by the 37 CFR 1.47(a) applicant on his or her own behalf and on behalf of the non-signing joint inventor.

The renewed petition of 30 May 2006 has satisfied requirement 2 under 37 CFR 1.47(a). Thus satisfying all the requirements under 37 CFR 1.47(a).

Ms. Mariana Paula Noli's averments do sufficiently demonstrate that a *bona fide* attempt was made to obtain the signature of Keith Brodie and that he refused to sign the required papers. The declaration and application papers were mailed on May 12, 2006 to him and on or about May 15, 2006 a domestic return receipt signed by Keith Brodie was received by Ms. Noli. Accordingly, the conduct of Keith Brodie is interpreted based on the evidence of the papers submitted as a refusal to sign the required papers. Consequently, the current record does sufficiently establish Mr. Brodie's refusal to join in the application.

Petitioner has now satisfied items (1), (2), (3), and (4) under 37 CFR 1.47(a), thus completing the requirements under 37 CFR 1.47(a).

CONCLUSION

The petition under 37 CFR 1.47(a) is **GRANTED**.

The Application Division and the International Division are authorized to accept the application as a 37 CFR 1.47(a) application and to mail a filing receipt. The application will be given a 35 U.S.C. 371(c)(1), (c)(2), and (c)(4) date of **25 October 2005.**

As provided in 37 CFR 1.47(a), a notice of the filing of this application will be forwarded to the non-signing inventor at his last known address of record.

A notice of the filing of the application under 37 CFR 1.47(a) will be published in the Official Gazette.

This application is being returned to the United States Designated/Elected Office (DO/EO/US) for continued processing under 35 U.S.C. 371.

Rafael Bacares
PCT Legal Examiner
PCT Legal Office
Telephone: (571) 272-6312
Facsimile: (571) 273-0459

UNITED STATES PATENT and TRADEMARK OFFICE

COMMISSIONER FOR PATENTS
UNITED STATES PATENT AND TRADEMARK OFFICE
P.O BOX 1450
ALEXANDRIA, VA 22313-1450
www.uspto.gov

Keith Jacob Brodie
12 Silveroak
Irvine, CA 9260

19 JUL 2006

In re Application of
Orler et al
PCT No.: PCT/US2003/019363
Application No: 10/518,621
Int. Filing Date: 18 June 2003
Priority Date: 20 June 2002
Attorney's Docket No.: ST02017USU3 (141-US-U3)
For: GENERIC SATELLITE POSITIONING ...
SELECTABLE INPUTS AND OUTPUTS

Dear Keith Jacob Brodie:

You are named as an inventor in the above identified United States patent application, filed under the provisions of 37 CFR 1.47(a) and 35 U.S.C. 116. Should a patent be granted, you will be designated as an inventor.

As a named inventor, you are entitled to inspect any paper in the file wrapper of the application, order copies of all or any part thereof (at a prepaid cost per 37 CFR 1.19) or to make your position of record in the application. Alternatively, you may arrange to do any of the preceding through a registered patent agent or attorney presenting written authorization from you. If you care to join in the application, counsel of record (see below) would presumably assist you. Joining in the application would entail the filing of an appropriate oath or declaration by you pursuant to 37 CFR 1.63.

Rafael Bacares
PCT Legal Examiner
PCT Legal Office
Telephone: (571) 272-3276
Facsimile: (571) 273-0459

Jennifer H. Hamilton
THE ECLIPSE GROUP
10453 Raintree Lane,
Northridge, CA 91326

WO 2004/001439 Rec'd PCT/PTO 20 DEC 2004 10/518621 PCT/US2003/019363

~~GENERIC SATELLITE POSITIONING SYSTEM RECEIVERS~~ WITH PROGRAMMABLE INPUTS AND SELECTABLE INPUTS AND OUTPUTS

BACKGROUND OF THE INVENTION

1. Cross References to Related Applications

JP

[001] This application is a national stage application filed under 35 U.S.C. 371 of International Application PCT/US03/19363, filed June 18, 2003, which claimed ~~claims~~ priority of U.S. Patent Application Serial No. 10/177,128 filed June 20, 2002 and U.S. Patent Application Serial No. 10,177,982 filed June 20, 2002 , both incorporated by reference into this application.

2. Field of the Invention

[002] The present invention relates in general to Satellite Positioning System (SATPS) systems and in particular to generic Satellite Positioning System (SATPS) receivers and related methods.

3. Description of the Related Art

[003] Use of wireless communicators such as cellular telephones, Personal Communication System (PCS) devices, and Personal Data Assistant (PDA) devices, has become commonplace. Such devices can provide voice, data, and other services, such as internet access, affording many conveniences to cellular system users.

[004] The cellular and PCS arenas have recently integrated Satellite Positioning System (SATPS) technology, including Global Positioning System (GPS) technology, into wireless transceiver devices such as the cellular telephone. For example, U.S. Patent No. 5,874,914, issued to Krasner, which is incorporated by reference herein, describes a conventional method wherein the basestation (also known as the Mobile Telephone Switching Office (MTSO)) transmits GPS satellite information, including Doppler information, to a remote unit using a cellular data link, and then computes pseudoranges to the in-view satellites without receiving or using satellite ephemeris information.

[005] This current interest in integrating GPS with cellular telephony stems from a recent Federal Communications Commission (FCC) regulations requiring that cellular telephones be locatable within 20 feet when an emergency call, such as a "911" call (also referred to as

UNITED STATES PATENT AND TRADEMARK OFFICE

UNITED STATES DEPARTMENT OF COMMERCE
United States Patent and Trademark Office
Address: COMMISSIONER FOR PATENTS
P.O. Box 1450
Alexandria, Virginia 22313-1450
www.uspto.gov

YOUNG & THOMPSON
209 Madison Street
Suite 500
Alexandria, VA 22314

Mail Date: 07/20/2010

Applicant	: Albert Armer	: DECISION ON REQUEST FOR
Patent Number	: 7648345	: RECALCULATION of PATENT
Issue Date	: 01/19/2010	: TERM ADJUSTMENT IN VIEW
Application No	: 10/518,633	: OF WYETH AND NOTICE OF INTENT TO
Filed	: 09/19/2005	: ISSUE CERTIFICATE OF CORRECTION
		:

The Request for Recalculation is **GRANTED** to the extent indicated.

The patent term adjustment has been determined to be **788** days. The USPTO will *sua sponte* issue a certificate of correction reflecting the amount of PTA days determined by the recalculation.

Prior to the issuance of the certificate of correction, the USPTO will afford patentee an opportunity to be heard and request reconsideration. Accordingly, patentee has **one month or thirty (30) days**, whichever is longer, to file a request for reconsideration of this patent term adjustment calculation. See 35 U.S.C. 154(b)(3)(B)(ii) and 37 CFR 1.322(a)(4). No extensions of time will be granted under 37 CFR 1.136.

Patentee should use document code PET.OP if electronically filing a request for reconsideration of this patent term adjustment calculation. The patentee must also include the information required by 37 CFR 1.705(b)(2) and the fee required by 37 CFR 1.18(e). If patentee does not file a timely request for reconsideration of this patent term adjustment calculation including the information required by 37 CFR 1.705(b)(2) and the fee required by 37 CFR 1.18(e), the USPTO will issue a certificate of correction reflecting the PTA determination noted above.

Patentee should be aware that in order to preserve the right to review in the United States District Court for the District of Columbia of the USPTO patent term adjustment determination, patentee must ensure that he or she also take the steps required under 35 U.S.C. 154(b)(4)(A) in a timely manner. Nothing in the request for recalculation should be construed as providing an alternative time frame for commencing a civil action under 35 U.S.C. 154(b)(4)(A).

Any questions concerning this decision should be directed to the Office of Patent Legal Administration at 571-272-7702.

UNITED STATES PATENT AND TRADEMARK OFFICE

Commissioner for Patents
United States Patent and Trademark Office
P.O. Box 1450
Alexandria, VA 22313-1450
www.uspto.gov

Wendi Leigh Weinstein
P.O. Box 1404
Alexandria, VA 22313-1404

MAILED

SEP 21 2005

Director's Office
Group 3700

In re Application of :
Sean Linden :
Serial No. 10/518,641 : DECISION ON PETITION
Filed: April 04, 2005 : TO MAKE SPECIAL
For: VALVE ASSEMBLY FOR OPENING AND CLOSING A FUEL LINE

Applicant's petition, filed September 13, 2005, seeks to have this application made special pursuant to the Accelerated Examination Program. The petition is GRANTED.

The petition has been reviewed and is found to be in compliance with the requirements for special status as set forth in Section 708.02(VIII) of the Manual of Patent Examining Procedures (MPEP).

Applicant is advised that the examiner's search will be restricted to the subject matter encompassed by the claims. In the event that the application receives a first action rejection, applicant is encouraged to arrange for an interview with the examiner, and to provide the examiner with a working copy of any proposed amendment one working day prior to the interview. Any amendment filed in response to a first action rejection, which would require broadening of the field of search will be treated as an improper response.

PETITION GRANTED.

Richard A. Bertsch

Richard A. Bertsch, Director
Technology Center 3700
571-272-3750

rt/ 9/20/05

UNITED STATES PATENT AND TRADEMARK OFFICE

UNITED STATES DEPARTMENT OF COMMERCE
United States Patent and Trademark Office
Address: COMMISSIONER FOR PATENTS
P.O. Box 1450
Alexandria, Virginia 22313-1450
www.uspto.gov

APPLICATION NO.	FILING DATE	FIRST NAMED INVENTOR	ATTORNEY DOCKET NO.	CONFIRMATION NO.
10/518,654	12/16/2004	Christopher S. Brook	P51365	6840

20462 7590 06/27/2007
SMITHKLINE BEECHAM CORPORATION
CORPORATE INTELLECTUAL PROPERTY-US, UW2220
P. O. BOX 1539
KING OF PRUSSIA, PA 19406-0939

EXAMINER
BARKER, MICHAEL P

ART UNIT	PAPER NUMBER
1626	

MAIL DATE	DELIVERY MODE
06/27/2007	PAPER

Please find below and/or attached an Office communication concerning this application or proceeding.

The time period for reply, if any, is set in the attached communication.

UNITED STATES
PATENT AND
TRADEMARK OFFICE

UNDER SECRETARY OF COMMERCE FOR INTELLECTUAL PROPERTY AND
DIRECTOR OF THE UNITED STATES PATENT AND TRADEMARK OFFICE
P.O. Box 1450
Alexandria, VA. 22313-1450
WWW.USPTO.GOV

Grace C. Hsu
GLAXOSMITHKLINE
UW2220 – P.O. Box 1539
King of Prussia, PA 19406-0939

Date: June 21, 2007
Application No. 10/518,654
Filed: December 16, 2004
Title: Carvedilol Phosphate Salts and/or Solvates Thereof, Corresponding Compositions and/or Methods of Treatment

ON PETITION
37 CFR 1.48(b)

Receipt is acknowledged of the petition filed June 20, 2007 under 37 CFR 1.48(b) for correction of inventorship. The petition has been **GRANTED**.

In view of the papers filed, it has been found that during the prosecution of the instant application a restriction was required and therefore, not all of the inventors contributed to the invention as claimed. Accordingly, this application has been changed by the **deletion of PHILIP DELL 'ORCO, LEE M. KATRINIC, ANN MARIE LOUVET, CHOON K. OH, and CHRISTOPHER WERNER.** The application will be forwarded to the Office of Initial Patent Examination (OIPE) for issuance of a corrected filing receipt, and correction of the file jacket and PTO PALM data to reflect the inventorship as corrected.

Joseph K. McKane

JOSEPH K. MCKANE
United States Patent and Trademark Office
Technology Center 1600
SPE, ART UNIT 1626
Remsen 5A05
571-272-0699

16 AUG 2005

#3

UNITED STATES PATENT AND TRADEMARK OFFICE

Commissioner for Patents
United States Patent and Trademark Office
P.O. Box 1450
Alexandria, VA 22313-1450
www.uspto.gov

FISH & RICHARDSON P.C.
Citigroup Center
52nd Floor
New York, NY 10022-4611

In re Application of	:	
KUFE, Donald W. *et al*	:	
Application No.: 10/518,665	:	
PCT No.: PCT/US03/10112	:	
Int. Filing Date: 20 March 2003	:	**DECISION**
Priority Date: 21 March 2002	:	
Attorney Docket No.: 00530-108US1	:	
For: INHIBITION OF CELL DEATH	:	
RESPONSES INDUCED BY	:	
OXIDATIVE STRESS	:	

Applicants' "Petition to Revive Application Under 37 CFR 1.137(b)" filed with the national stage papers on 17 December 2004 is hereby **GRANTED** as follows:

The basic national fee and petition fee have been paid. Applicant states that "[t]he entire delay in filing the required reply from the due date for the reply until the filing of a grantable petition under 37 CFR 1.137(b) was unintentional" as required by 37 CFR 1.137(b)(3). A terminal disclaimer is not required. Accordingly, all requirements under 37 CFR 1.137(b) have been satisfied.

A signed oath or declaration has not been provided.

This application is being forwarded to the United States Designated/Elected Office for further processing including mailing a Notification of Missing Requirements Under 35 U.S.C. 371 in the United States Designated/Elected Office (DO/EO/US) (Form PCT/DO/EO/905) indicating that a declaration in compliance with 37 CFR 1.497(a) and (b) and a surcharge fee are required.

James Thomson
Attorney Advisor
PCT Legal Administration

Tel.: (571) 272-3302

UNITED STATES PATENT AND TRADEMARK OFFICE

Commissioner for Patents
United States Patent and Trademark Office
P.O. Box 1450
Alexandria, VA 22313-1450
www.uspto.gov

24 OCT 2007

ECOLAB Inc.
Mail Stop ESC-F7
655 Lone Oak Drive
Eagan, Minnesota 55121

In re Application of	:
ROGMANN et al.	:
Application No. 10/518,672	:
PCT No.: PCT/EP03/06497	: DECISION ON PETITION
Int. Filing Date: 20 June 2003	: UNDER 37 CFR 1.181
Priority Date: 29 June 2002	:
Attorney Docket No.: 1997USWO	:
For: FLOOR CLEANING AND CARE COMPOSITIONS	

This decision is issued in response to applicants' "Communication Requesting Withdrawal of Notification of Abandonment" filed 24 May 2006 which is being treated as a Petition under 37 CFR 1.181 to Withdraw the Holding of Abandonment.

BACKGROUND

On 20 June 2003, applicants filed the above identified international application which claimed a priority date of 29 June 2002. Pursuant to 37 CFR 1.495, the thirty-month period for paying the basic national fee in the United States expired at midnight on 29 December 2004.

On 16 December 2004, applicants filed a transmittal letter for entry into the national stage in the United States which was accompanied by, inter alia: the basic national fee; a translation of the international application; an application data sheet; and a preliminary amendment.

On 11 January 2005, applicants filed an executed declaration and power of attorney.

On 28 June 2005, the United Stated Designated/Elected Office mailed a Notification of Missing Requirements under 35 U.S.C. 371 (Form PCT/DO/EO/905) indicating that an oath or declaration in compliance with 37 CFR 1.497(a) and (b) must be filed. The notification set a two-month time limit in which to respond.

On 02 May 2006, the United States Designated/Elected Office (DO/EO/US) mailed a Notification of Abandonment (Form PCT/DO/EO/909) indicating that the application was abandoned for failure to file a complete response to the Notification of Missing Requirements mailed 28 June 2005 within the time period set therein.

On 24 May 2006, applicants filed "Communication Requesting Withdrawal of Notification of Abandonment."

DISCUSSION

Applicant states in their present petition that an oath/declaration was received at the United States Patent and Trademark Office on 11 January 2005. A review of the application file reveals that the declaration originally filed 11 January 2005 is located therein, therefore, the Notification of Missing Requirements under 35 U.S.C. 371 (Form PCT/DO/EO/905) and the Notification of Abandonment (PCT/EO/909) were mailed in error.

CONCLUSION

Applicants' petition to withdraw the holding of abandonment is **GRANTED**.

In view of the receipt of the declaration and power of attorney filed 11 January 2005, the Notification of Missing Requirements under 35 U.S.C. 371 (Form PCT/DO/EO/905) and the Notification of Abandonment (PCT/EO/909) were mailed in error and are hereby **VACATED**.

This application is being returned to the United States Designated/Elected Office (DO/EO/US) for processing in accordance with this decision.

Anthony Smith

Anthony Smith
Attorney-Advisor
Office of PCT Legal Administration
Telephone: 571-272-3298
Fax: 571-273-0459

UNITED STATES PATENT AND TRADEMARK OFFICE

Commissioner for Patents
United States Patent and Trademark Office
P.O. Box 1450
Alexandria, VA 22313-1450
www.uspto.gov

COPY MAILED

JUN 19 2009

OFFICE OF PETITIONS

INTELLECTUAL PROPERTY GROUP
FREDRIKSON & BYRON PA
200 SOUTH SIXTH STREET SUITE 4000
MINNEAPOLIS MN 55402

In re Application of	:	
Rogmann, et al.	:	
Application No. 10/518,672	:	ON PETITION
Filed: January 11, 2005	:	
Attorney Docket No. 29805.126.3	:	

This is a decision on the petition to revive under 37 CFR 1.137(b), filed May 14, 2009.

The petition under 37 CFR 1.137(b) is **GRANTED**.

The above-identified application became abandoned for failure to timely pay the issue fee in response to the Notice of Allowance mailed February 10, 2009. This Notice set a statutory period for reply of three (3) months for issue fee transmittal. No issue fee having been received, the application became abandoned on May 11, 2009. A Notice of Abandonment was mailed on May 18, 2009.

With the instant petition, petitioner paid the petition fee, made the proper statement of unintentional delay, and submitted the required reply in the form of the issue fee.

The application is being forwarded to the Office of Data Management for processing into a patent.

Telephone inquiries related to this decision should be directed to the undersigned at (571)272-3207.

Cliff Congo
Petitions Attorney
Office of Petitions

25 AUG 2005

UNITED STATES PATENT AND TRADEMARK OFFICE

Commissioner for Patents
United States Patent and Trademark Office
P.O. Box 1450
Alexandria, VA 22313-1450
www.uspto.gov

SEED INTELLECTUAL PROPERTY LAW GROUP PLLC
701 FIFTH AVE
SUITE 6300
SEATTLE WA 98104-7092

In Re Application of KOBAYASHI et al. Serial No.: 10/518,683 PCT No.: PCT/JP03/07733 Int. Filing Date: 18 June 2003 Priority Date: 18 June 2002 Attorney Docket No.: 890050.515USPC For: SOLID ELECTROLYTIC CAPACITOR, CIRCUIT BOARD HAVING BUILT-IN SOLID ELECTROLYTIC CAPACITOR	DECISION ON PETITION UNDER 37 CFR 1.182

This is a decision on a petition under 37 CFR 1.182 filed in the United States Patent and Trademark Office (USPTO) on 12 August 2005.

On 17 December 2004, applicant filed a request for national stage entry under 35 U.S.C. 371 for the above referenced international application. On 26 May 2005, a Notification of Acceptance was mailed to applicant erroneously indicating the date of receipt of all requirements under 35 U.S.C. 371(c)(1), (c)(2) and (c)(4) as 17 December 2004.

On 12 August 2005, applicant filed the instant petition along with an executed declaration directed to the above referenced international application. Applicant alleges that the USPTO incorrectly mailed a Filing Receipt and Notice of Acceptance.

A review of the application file reveals that a declaration was not previously filed . The Notification of Acceptance (Form PCT/DO/EO/903) was erroneously issued on 26 May 2005 since an oath or declaration in compliance with 37 CFR 1.497(a) and (b) had not been filed and the requirements of 35 U.S.C. 371(c) had not been met. The 26 May 2005 Notification of Acceptance is incorrect and hereby **VACATED**.

A review of the finance records for this application reveals that the $130 surcharge for filing the declaration after the thirty month period was paid. The declaration filed on 12 August 2005 is executed by the inventors, in compliance with 37 CFR 1.497(a) and (b), and is acceptable.

The petition under 37 CFR 1.182 is **GRANTED**. A new Notification of Acceptance will be issued. The 35 U.S.C. 371(c)(1), (c)(2) and (c)(4) date is **12 August 2005.** A new filing receipt will be issued.

Cynthia M. Kratz
Attorney Advisor
Office of PCT Legal Administration
Telephone: 571-272-3286

#5

UNITED STATES PATENT AND TRADEMARK OFFICE

Commissioner for Patents
United States Patent and Trademark Office
P.O. Box 1450
Alexandria, VA 22313-1450
www.uspto.gov

13 JUL 2006

HOFFMANN & BARON, LLP
6900 JERICHO TURNPIKE
SYOSSET, NY 11791

In re Application of	:	
DREXLER, Joannes Herman	:	
Application No.: 10/518,700	:	DECISION
PCT No.: PCT/NL03/00453	:	
Int. Filing Date: 20 June 2003	:	ON REQUESTS UNDER
Priority Date: 20 June 2002	:	
Attorney's Docket No.: 903-127 PCT/US	:	37 CFR 1.497(d) and 1.42
For: CHILD SEAT	:	

This decision is in response to applicant's petition under 37 CFR 1.497, filed in the United States Patent and Trademark Office on 06 January 2006. Additionally, the declaration contains indicates that the inventor is deceased. The declaration has been treated as a request for status under 37 CFR 1.42.

BACKGROUND

On 20 June 2003, applicant filed international application PCT/NL03/00453, which claimed a priority date of 20 June 2002. A copy of the international application was transmitted to the Office on 31 December 2003 by the International Bureau. The deadline for entry into the national stage in the United States was midnight on 20 December 2004.

On 20 December 2004, applicant filed a submission for entry into the national stage in the United States, accompanied by, *inter alia*, the U.S. Basic National Fee.

On 07 November 2005, the Office mailed Notification of Missing Requirements, indicating that an oath or declaration in compliance with 37 CFR 1.497(a)-(b) and the surcharge for late filing of the search fee, examination fee or oath or declaration was required.

On 06 January 2006, applicant filed a declaration, the instant request and the surcharge.

DISCUSSION

Request Under 37 CFR 1.497(d)

Applicant has filed a request to correct the inventive entity in the above application, but incorrectly identifies the current inventive entity. Applicant identifies the inventive entity as Joannes Herman Drexler (heir) and Cornelis Kees Drexler (heir), but the sole inventor listed for the application is Joannes Herman Drexler (deceased). Joannes Herman Drexler (heir) and Cornelis Kees Drexler (heir) are listed as applicants for the US only, not as inventors. It appears that applicant is attempting to utilize 37 CFR 1.497(d), when 37 CFR 1.42 is appropriate. For these reasons, applicant's request to add Cornelia Groen as an inventor is not addressed in detail.

Request Under 37 CFR 1.42

Under 35 U.S.C. §117, legal representatives of deceased inventors may make application for patent upon compliance with the requirements and on the same terms and conditions applicable to the inventor. The "legal representative (executor, administrator, etc.) of the deceased inventor may make the necessary oath or declaration, and apply for and obtain the patent." 37 CFR 1.42.

The declaration must list the inventors and their citizenships and the legal representative and the legal representative's citizenship, residence and postal address. See 37 CFR 1.497. The declaration appears to list the information for the heirs and for the deceased inventor. However, as set out below, the declaration is defective.

1. The declaration does not state that the heirs are the "sole heirs" of the deceased inventor or that the heirs are the "legal representatives" of the deceased inventor.

The declaration is executed by Cornelia Groen, Joannes Herman Drexler and Johanna Franciscus Antonia Rossen as heirs. Cornelia Groen and Joannes Herman Drexler (heir) are listed as heirs of the deceased inventor and Johanna Rossen is listed as heir of a deceased heir. The indication that Cornelia Groen and Joannes Herman Drexler are heirs of the deceased and that Johanna Rossen is the heir of deceased heir Cornelis Kees Drexler leaves open the possibility that there are other non-signing joint heirs. Further, if Johanna Rossen is an heir of the deceased inventor through her deceased husband, she should be identified as one of the sole heirs of the deceased inventor or as a legal representative of the deceased inventor. That she is an heir of a deceased heir does not clearly set out her relationship to the deceased inventor and the capacity in which she is signing the declaration, as required by 37 CFR 1.497(b)(2). In the alternative, Johanna Rossen could be listed as "sole heir" of the heir Cornelis Kees Drexler, one of three sole heirs of the deceased inventor.

A statement that the heirs are the sole heirs of the deceased inventor is construed as a statement that a legal representative has not been appointed, nor is one required to be appointed under applicable law and that the authority of the heirs corresponds to the authority of a legal representative. Proof of authority is not required. MPEP 409.01(b).

2. The declaration has been modified.

The declaration contains undated, non-initialed alterations, which are not permitted. 37 CFR 1.52(c)(1). Page 2 of the declaration executed by Cornelia Groen has had text blocked out and handwriting removed. It is improper for anyone, including counsel, to alter, rewrite or partly fill in any part of the application, including the oath or declaration, after execution of the oath or declaration by the applicant. MPEP 605.04(a).

3. Applicant has provided three different names for the deceased heir of the deceased inventor.

The declaration identifies the deceased heir as "Kees Cornelis Drexler" and "Cornelis Kees Cornelis". However, he is identified on the international application and other papers as "Cornelis Kees Drexler." Clarification of the discrepancy is required.

CONCLUSION

For the above reasons, applicant's request under 37 CFR 1.497(d) and under 37 CFR 1.42 are **REFUSED**.

A proper response is required within a period of **TWO (2) MONTHS** from the mail date of this decision. The response should be entitled "Renewed Request Under 37 CFR 1.42." Failure to timely response will result in the ABANDONMENT of this application. Any request for reconsideration of the request under 37 CFR 1.497(d) must be filed within **TWO (2) MONTHS** from the mail date of this decision and should be entitled "Renewed Request Under 37 CFR 1.497(d)". Extensions of time for both responses are available under 37 CFR 1.136(a).

Any further correspondence with respect to this matter should be addressed to the Mail Stop PCT, Commissioner for Patents, Office of PCT Legal Administration, P.O. Box 1450, Alexandria, Virginia 22313-1450, with the contents of the letter marked to the attention of the Office of PCT Legal Administration.

Erin P. Thomson

Erin P. Thomson
Attorney Advisor
PCT Legal Administration

Telephone: 571-272-3292
Facsimile: 571-273-0459

21 NOV 2006

#7

UNITED STATES PATENT AND TRADEMARK OFFICE

Commissioner for Patents
United States Patent and Trademark Office
P.O. Box 1450
Alexandria, VA 22313-1450
www.uspto.gov

HOFFMANN & BARON, LLP
6900 JERICHO TURNPIKE
SYOSSET, NY 11791

In re Application of	:	
DREXLER, Joannes Herman	:	
Application No.: 10/518,700	:	DECISION
PCT No.: PCT/NL03/00453	:	
Int. Filing Date: 20 June 2003	:	ON REQUEST UNDER
Priority Date: 20 June 2002	:	
Attorney's Docket No.: 903-127 PCT/US	:	37 CFR 1.42
For: CHILD SEAT	:	

This decision is in response to applicant's renewed request under 37 CFR 1.42 filed in the United States Patent and Trademark Office on 13 September 2006.

BACKGROUND

On 13 July 2006, the Office mailed Decision On Requests Under 37 CFR 1.497(d) and 1.42, refusing applicants' requests and setting a two month period for reply.

On 13 September 2006, applicants filed this renewed request under 37 CFR 1.42.

DISCUSSION

Under 35 U.S.C. §117, legal representatives of deceased inventors may make application for patent upon compliance with the requirements and on the same terms and conditions applicable to the inventor. The "legal representative (executor, administrator, etc.) of the deceased inventor may make the necessary oath or declaration, and apply for and obtain the patent." 37 CFR 1.42.

The declaration must list the inventors and their citizenships and the legal representative and the legal representative's citizenship, residence and postal address. See 37 CFR 1.497. The declaration lists these elements, however the declaration appears to have been pieced together from at least two separately executed declarations.

The declaration contains one page 1 and one page 2, but two pages 3. The pages 3 list the same people, but are separately executed. While it is acceptable for the inventors or legal representatives to execute separate copies of the oath or declaration, the complete oath or declaration as executed must be submitted. It is unacceptable to piece together separately executed declarations to create a single composite declaration.

CONCLUSION

For the above reasons, applicants' request under 37 CFR 1.42 is **REFUSED**.

A proper response is required within a period of **TWO (2) MONTHS** from the mail date of this decision. The response should be entitled "Renewed Request Under 37 CFR 1.42." Failure to timely

response will result in the ABANDONMENT of this application. Extensions of time for both responses are available under 37 CFR 1.136(a).

Any further correspondence with respect to this matter should be addressed to the Mail Stop PCT, Commissioner for Patents, Office of PCT Legal Administration, P.O. Box 1450, Alexandria, Virginia 22313-1450, with the contents of the letter marked to the attention of the Office of PCT Legal Administration.

Erin P. Thomson

Erin P. Thomson
Attorney Advisor
PCT Legal Administration

Telephone: 571-272-3292
Facsimile: 571-273-0459

UNITED STATES PATENT AND TRADEMARK OFFICE

Commissioner for Patents
United States Patent and Trademark Office
P.O. Box 1450
Alexandria, VA 22313-1450
www.uspto.gov

29 DEC 2006

HOFFMANN & BARON, LLP
6900 JERICHO TURNPIKE
SYOSSET, NY 11791

In re Application of	:	
DREXLER, Joannes Herman	:	
Application No.: 10/518,700	:	DECISION
PCT No.: PCT/NL03/00453	:	
Int. Filing Date: 20 June 2003	:	ON REQUEST UNDER
Priority Date: 20 June 2002	:	
Attorney's Docket No.: 903-127 PCT/US	:	37 CFR 1.42
For: CHILD SEAT	:	

This decision is in response to applicants' renewed request under 37 CFR 1.42 filed in the United States Patent and Trademark Office on 30 November 2006.

BACKGROUND

On 21 November 2006, the Office mailed Decision On Request Under 37 CFR 1.42, refusing applicants' request and setting a two month period for reply.

On 30 November 2006, applicants filed this renewed request under 37 CFR 1.42.

DISCUSSION

Under 35 U.S.C. §117, legal representatives of deceased inventors may make application for patent upon compliance with the requirements and on the same terms and conditions applicable to the inventor. The "legal representative (executor, administrator, etc.) of the deceased inventor may make the necessary oath or declaration, and apply for and obtain the patent." 37 CFR 1.42.

The 30 November 2006 declarations satisfy the requirements of 37 CFR 1.497(a)-(b).

CONCLUSION

For the above reasons, applicants' request under 37 CFR 1.42 is **GRANTED**.

This application is being forwarded to the National Stage Processing Branch of the Office of PCT Operations for further action consistent with this decision. The application has a 35 U.S.C. 371(c)(1), (c)(2) and (c)(4) date of 30 November 2006.

Erin P. Thomson

Erin P. Thomson
Attorney Advisor
PCT Legal Administration

Telephone: 571-272-3292
Facsimile: 571-273-0459

UNITED STATES PATENT AND TRADEMARK OFFICE

COMMISSIONER FOR PATENTS
UNITED STATES PATENT AND TRADEMARK OFFICE
P.O. BOX 1450
ALEXANDRIA, VA 22313-1450
www.uspto.gov

FINNEGAN, HENDERSON, FARABOW, GARRETT & DUNNER
LLP
901 NEW YORK AVENUE, NW
WASHINGTON DC 20001-4413

COPY MAILED

DEC 16 2009

OFFICE OF PETITIONS

In re Patent No. 7,488,735
Issued: February 10, 2009
Application No. 10/518,714
Filed: August 1, 2005
Dkt. No.: 09605.0045

: PATENT TERM ADJUSTMENT

This is a decision on the "APPLICATION FOR PATENT TERM ADJUSTMENT-POST GRANT," filed March 24, 2009. This matter is being properly treated under 37 CFR 1.705(d). Patentees request correction of the patent term adjustment from 387 days to either 584 days (Application for PTA p.1) or 580 days (Application for PTA p2.). Patentees request this correction on the sole basis that the Office took in excess of three years to issue the above-referenced patent.

The application for patent term adjustment (PTA) under 37 CFR 1.705(d) is **DISMISSED**.

The above-identified application matured into U.S. Pat. No. 7,488,735 on February 10, 2009. The patent issued with a patent term adjustment of 387 days. The instant application of patent term adjustment is timely filed pursuant to 37 CFR 1.705(d). Patentees argue that in view of Wyeth v. Dudas, 580 F. Supp. 2d 138, 88 U.S.P.Q. 2d 1538 (D.D.C. 2008), the patent is entitled to an adjustment of 580 days (416 days pursuant to 35 USC 154(b)(1)(A) *plus* 193 days pursuant to 35 USC 154(b)(1)(B) *less* 29 days applicant delay).

Patentees also state that "[t]he application was allowed on October 2, 2008, and the issue fee was paid on January 5, 2009. The patent issued on February 10, 2009, creating a PTO delay of four days."

The request for an additional adjustment of four days in connection with the issuance of the patent is **DISMISSED**. The issue fee was paid January 5, 2009. The patent issued February 10, 2009, within four months of the date of receipt of the issue fee. Therefore, no additional adjustment is warranted under 37 CFR 1.702(a)(4).

Under 37 CFR 1.703(f), patentees are entitled to a period of patent term adjustment equal to the period of delays based on the grounds set forth in 37 CFR 1.702 reduced by the period of time equal to the period of time during which patentees failed to engage in reasonable efforts to conclude prosecution pursuant to 37 CFR 1.704. In other words, patentees are entitled to the period of Office delay reduced by the period of applicant delay.

The Office asserts that as of the issuance of the patent on February 10, 2009, the application was pending three years and 405 days after national stage commenced under 35 U.S.C. 371(b) or (f) in an international application (January 3, 2008 to February 10, 2009). The Office agrees that certain action was not taken within the specified time frame, and thus, the adjustment of 416 days pursuant to 37 CFR 1.702(a)(1) is correct. At issue is whether patentees should accrue 405 days of patent term adjustment for the Office taking in excess of three years to issue the patent, as well as 416 days for Office failure to take a certain action within a specified time frame (or examination delay).

The Office contends that the period of 405 days of delay in issuance of the patent under 37 CFR 1.702(b) overlaps with the period of 416 days of examination delay under 37 CFR 1.702(a)(1). Patentees' calculation of the period of overlap is inconsistent with the Office's interpretation of this provision. 35 U.S.C. 154(b)(2)(A) limits the adjustment of patent term, as follows:

35 U.S.C. 154(b)(2)(A) limits the adjustment of patent term, as follows:

> To the extent that the periods of delay attributable to grounds specified in paragraph (1) overlap, the period of any adjustment granted under this subsection shall not exceed the actual number of days the issuance of the patent was delayed.

As explained in *Explanation of 37 CFR 1.703(f)*[1] *and of the United States Patent and Trademark Office Interpretation of 35 U.S.C. 154(b)(2)(A)*, 69 Fed. Reg. 34283 (June 21, 2004), the Office interprets 35 U.S.C. 154(b)(2)(A) as permitting either patent term adjustment under 35 U.S.C. 154(b)(1)(A)(i)-(iv), or patent term adjustment under 35 U.S.C. 154(b)(1)(B), but not as permitting patent term adjustment under both 35 U.S.C. 154(b)(1)(A)(i)-(iv) and 154(b)(1)(B). Accordingly, the Office implements the overlap provision as follows:

> If an application is entitled to an adjustment under 35 U.S.C. 154(b)(1)(B), the entire period during which the application was pending (except for periods excluded under 35 U.S.C. 154(b)(1)(B)(i)-(iii)), and not just the period beginning three years after the actual filing date of the application, is the period of delay under 35 U.S.C. 154(b)(1)(B) in determining whether periods of delay overlap under 35 U.S.C. 154(b)(2)(A). Thus, any days of delay for Office issuance of the patent more than 3 years after the filing date of the application, which overlap with the days of patent term adjustment accorded prior to the issuance of the patent will not result in any additional patent term adjustment. See 35 U.S.C. 154(b)(1)(B), 35 U.S.C. 154(b)(2)(A), and 37 CFR § 1.703(f). See *Changes to Implement Patent Term Adjustment Under Twenty Year Term; Final Rule*, 65 Fed. Reg. 54366 (Sept. 18, 2000). See also *Revision of Patent Term Extension and Patent Term*

---

[1] Likewise, 37 CFR 1.703(f) provides that:

> To the extent that periods of delay attributable to the grounds specified in §1.702 overlap, the period of adjustment granted under this section shall not exceed the actual number of days the issuance of the patent was delayed.

Adjustment Provisions; Final Rule, 69 Fed. Reg. 21704 (April 22, 2004), 1282 Off. Gaz. Pat. Office 100 (May 18, 2004).

Further, as stated in the *Explanation of 37 CFR 1.703(f) and of the United States Patent and Trademark Office Interpretation of 35 U.S.C. 154(b)(2)(A)*, the Office has consistently taken the position that if an application is entitled to an adjustment under the three-year pendency provision of 35 U.S.C. 154(b)(1)(B), the entire period during which the application was pending before the Office (except for periods excluded under 35 U.S.C. 154(b)(1)(B)(i)-(iii)), and not just the period beginning three years after national stage commence, is the relevant period under 35 U.S.C. 154(b)(1)(B) in determining whether periods of delay "overlap" under 35 U.S.C. 154(b)(2)(A).

This interpretation is consistent with the statute. Taken together the statute and rule provide that to the extent that periods of delay attributable to grounds specified in 35 U.S.C. 154(b)(1) and in corresponding §1.702 overlap, the period of adjustment granted shall not exceed the actual number of days the issuance of the patent was delayed.

In this instance, the relevant period under 35 U.S.C. 154(b)(1)(B) in determining whether periods of delay "overlap" under 35 U.S.C. 154(b)(2)(A) is the period during which the application was pending before the Office beginning on the date that national stage commenced under 35 U.S.C. 371(b) or (f) in an international application, January 2, 2005, and ending on the date that the patent issued, February 10, 2009.

Pursuant to 35 U.S.C. 154(b)(1)(A) and 37 CFR 1.702(a)(1), the application was pending 14 months and 416 days prior to the issuance of the restriction requirement on November 21, 2007. Pursuant to 35 U.S.C. 154(b)(1)(B) and 37 CFR 1.702(b), the application was pending three years and 405 days prior to the issuance of the patent on February 10, 2009.

The 405 days of delay in issuance of the patent under 37 CFR 1.702(b) overlap with the 416 days of patent term adjustment under 37 CFR 1.702(a). Entry of both the 405 days and the 416 days is neither permitted nor warranted given that 416 days is the actual number of days issuance of the patent was delayed.

Accordingly, at issuance, having considered the 405 days of Office delay under the three-year pendency provision in conjunction with the 416 days of examination delay, reduced 29 days for applicant delay, the Office properly entered 387 days of patent term adjustment.

In view thereof, no adjustment to the patent term will be made.

Receipt is hereby acknowledged of the required patent term adjustment application fee of $200.00.

Telephone inquiries specific to this matter should be directed to the undersigned at (571) 272-3205.

/ALESIA M. BROWN/

Alesia M. Brown
Petitions Attorney
Office of Petitions

UNITED STATES PATENT AND TRADEMARK OFFICE

UNITED STATES DEPARTMENT OF COMMERCE
United States Patent and Trademark Office
Address: COMMISSIONER FOR PATENTS
P.O. Box 1450
Alexandria, Virginia 22313-1450
www.uspto.gov

FINNEGAN, HENDERSON, FARABOW, GARRETT & DUNNER LLP
901 NEW YORK AVENUE, NW
WASHINGTON, DC 20001-4413

Mail Date: 04/21/2010

Applicant	: Maria Prat Quinones	: DECISION ON REQUEST FOR
Patent Number	: 7488735	: RECALCULATION of PATENT
Issue Date	: 02/10/2009	: TERM ADJUSTMENT IN VIEW
Appliction No	: 10/518,714	: OF WYETH AND NOTICE OF INTENT TO
Filed	: 08/01/2005	: ISSUE CERTIFICATE OF CORRECTION
		:

The Request for Recalculation is **GRANTED** to the extent indicated.

The patent term adjustment has been determined to be **791** days. The USPTO will *sua sponte* issue a certificate of correction reflecting the amount of PTA days determined by the recalculation.

Prior to the issuance of the certificate of correction, the USPTO will afford patentee an opportunity to be heard and request reconsideration. Accordingly, patentee has **one month or thirty (30) days**, whichever is longer, to file a request for reconsideration of this patent term adjustment calculation. See 35 U.S.C. 154(b)(3)(B)(ii) and 37 CFR 1.322(a)(4). No extensions of time will be granted under 37 CFR 1.136.

Patentee should use document code PET.OP if electronically filing a request for reconsideration of this patent term adjustment calculation. The patentee must also include the information required by 37 CFR 1.705(b)(2) and the fee required by 37 CFR 1.18(e). If patentee does not file a timely request for reconsideration of this patent term adjustment calculation including the information required by 37 CFR 1.705(b)(2) and the fee required by 37 CFR 1.18(e), the USPTO will issue a certificate of correction reflecting the PTA determination noted above.

Patentee should be aware that in order to preserve the right to review in the United States District Court for the District of Columbia of the USPTO patent term adjustment determination, patentee must ensure that he or she also take the steps required under 35 U.S.C. 154(b)(4)(A) in a timely manner. Nothing in the request for recalculation should be construed as providing an alternative time frame for commencing a civil action under 35 U.S.C. 154(b)(4)(A).

Any questions concerning this decision should be directed to the Office of Patent Legal Administration at 571-272-7702.

UNITED STATES PATENT AND TRADEMARK OFFICE

Commissioner for Patents
United States Patent and Trademark Office
P.O. Box 1450
Alexandria, VA 22313-1450
www.uspto.gov

WOODCOCK WASHBURN, LLP
CIRA CENTRE
2929 ARCH STREET, 12TH FLOOR
PHILADELPHIA, PA 19104-2891

COPY MAILED
MAR 3 1 2008

In re Application of	:	
CHRISTIE, et al.	:	
Application No. 10/518,725	:	DECISION ON PETITION
Filed: May 26, 2005	:	TO WITHDRAW
Attorney Docket No. **CELL-0288 (07-1041-WO-US)**	:	FROM RECORD
	:	

This is a decision on the Request to Withdraw as attorney or agent of record under 37 C.F.R. § 1.36(b), filed October 12, 2007.

The request is **NOT APPROVED** as moot.

A review of the file record indicates that the power of attorney to **WOODCOCK WASHBURN, LLP** has been revoked by the assignee of the patent application on December 6, 2007. Accordingly, the request to withdraw under 37 C.F.R. § 1.36(b) is moot.

All future communications from the Office will continue to be directed to the below-listed address until otherwise notified by applicant.

Telephone inquires concerning this decision should be directed to the undersigned at 571-272-7253.

Monica A. Graves
Petitions Examiner
Office of Petitions

cc: **MCDONNELL BOEHNEN HULBERT & BERGHOFF, LLP**
300 S. WACKER DRIVE, 32ND FLOOR
CHICAGO, IL 60606

UNITED STATES PATENT AND TRADEMARK OFFICE

Commissioner for Patents
United States Patent and Trademark Office
P.O. Box 1450
Alexandria, VA 22313-1450
www.uspto.gov

OCT 03 2008

VENABLE LLP
P.O. BOX 34385
WASHINGTON DC 20043-9998

In re Application of: Geoffrey P. Dobson Serial No.: 10/518,733 Filed: December 21, 2004 Attorney Docket No.: 36749-212211	: : : : :	DECISION ON PETITION TO RESET REPLY PERIOD DUE TO NON-RECEIPT OF OFFICE ACTION

This is in response to applicants' petition under 37 CFR. § 1.181(a), filed on July 31, 2008, to reset a mailing date for an Office action that was never received.

A review of the file history shows that the examiner mailed a final Office action March 24, 2008, setting three-month shortened statutory time period for reply.

Applicant states that the action was never received and only discovered that an Office action was mailed during a status check of PAIR. Based on the evidence presented, it is concluded that the Office action of March 24, 2008 should be remailed with a reset reply period.

Applicant's petition is **GRANTED**.

Should there be any questions about this decision, please contact Marianne C. Seidel by letter addressed to Director, TC 1600, at the address listed above, or by telephone at 571-272-0584 or by facsimile at 703-872-9306.

Marianne C. Seidel
Quality Assurance Specialist
Technology Center 1600

SPE RESPONSE FOR CERTIFICATE OF CORRECTION

Paper No.: _____

DATE : Jan. 13, 2008

TO SPE OF : ART UNIT 2831
SUBJECT : Request for Certificate of Correction for Appl. No.: 10/518737 /7440254

Please respond to this request for a certificate of correction within 7 days.

FOR IFW FILES:

Please review the requested changes/corrections as shown in the **COCIN** document(s) in the IFW application image. No new matter should be introduced, nor should the scope or meaning of the claims be changed.

Please complete the response (see below) and forward the completed response to scanning using document code **COCX**.

FOR PAPER FILES:

Please review the requested changes/corrections as shown in the attached certificate of correction. Please complete this form (see below) and forward it with the file to:

Certificates of Correction Branch (CofC)
South Tower - 9A22
Palm Location 7580

Magdalene Talley
Certificates of Correction Branch
703-308-9390 ext. 116

Thank You For Your Assistance

The request for issuing the above-identified correction(s) is hereby:
Note your decision on the appropriate box.

- ☒ **Approved** — **All** changes apply.
- ☐ **Approved in Part** — Specify below which changes **do not** apply.
- ☐ **Denied** — State the reasons for denial below.

Comments: NH 12/1/09

12/1/09

DIEGO GUTIERREZ
SUPERVISORY PATENT EXAMINER 2831

UNITED STATES PATENT AND TRADEMARK OFFICE

Commissioner for Patents
United States Patent and Trademark Office
P.O. Box 1450
Alexandria, VA 22313-1450
www.uspto.gov

JJGJR.: 08-07

Paper No: __

COPY MAILED

SEP 04 2007

OFFICE OF PETITIONS

CROWELL & MORING LLP
INTELLECTUAL PROPERTY GROUP
P.O. BOX 14300
WASHINGTON DC 20044-4300

In re Application of	:	
Raabe, et al.	:	DECISION
Application No.: 10/518,748	:	
Filing Date: 26 July, 2005	:	
Attorney Docket No. 095309.5570US	:	

This is a decision on the petitions filed on 28 July and 30 November, 2006, to withdraw the holding of abandonment and considered under 37 C.F.R. §1.181.

The Office regrets the delay in addressing this matter, however, the instant petition was presented to the attorneys in the Office of Petitions only at this writing.[1]

For the reasons set forth below the petition as considered under 37 C.F.R. §1.181 is **GRANTED**.

BACKGROUND

The record reflects that:

- Petitioner failed to reply timely and properly to non final Office action mailed on 27

[1] **NOTE: Monitoring of the status of applications on PAIR can inform one's management of application responses and provide an indication when mailings of Office actions should be expected. Status Inquiries filed at three (3) or four (4) month intervals provide a demonstration of diligence and attention in supporting a petition seeking relief under 37 C.F.R. §1.181.**

February, 2006, with reply due absent an extension of time on or before 27 May, 2006;

- the application went abandoned by operation of law after midnight on 27 May, 2006;
- on 28 July, 2006, Petitioner filed the first petition (improvidently seeking relief under "37 C.F.R. §1.81" (sic) in the entitlement, rather than 37 C.F.R. §1.181, but correctly addressing the rule in the body of the petition), and averred therein, *inter alia*, that Petitioner understood that the 27 February, 2006 Office action had been mailed, but that Petitioner's review and search of files indicated that the Office action had not been received by Petitioner and Petitioner sought the re-mailing of the Office action and re-setting of the period for reply, and Petitioner attached a copy of his docket records in support of the averment of non-receipt of the Office action;
- the Office mailed the Notice of Abandonment on 29 September, 2006;
- on 30 November, 2006, Petitioner filed the second petition herein, and averred therein, *inter alia*, that the Office now had mailed a Notice of Abandonment but had not addressed the petition of 28 July, 2006, and once again asserted that Petitioner's review and search of files indicated that the 27 February, 2006 Office action had not been received by Petitioner and Petitioner sought the re-mailing of the Office action and re-setting of the period for reply, and Petitioner attached a copy of his docket records indicating non-receipt of the Office action–while this petition was filed one day outside of the two- (2-) month period set in the regulation, it is clear that Petitioner previously had Noticed the Office under 37 C.F.R. §1.181 (i.e., on 28 July, 2006) of the averment of non-receipt, and there is no suggestion of a lack of diligence on the part of Petitioner in seeking relief under the regulation.

Out of an abundance of caution, Petitioners always are reminded that the filing of a petition under 37 C.F.R. §1.181 does not toll any periods that may be running any action by the Office and a petition seeking relief under the regulation must be filed within two (2) months of the act complained of (see: 37 C.F.R. §1.181(f)); and those registered to practice *and* all others who make representations before the Office must inquire into the underlying facts of representations made to the Office and support averments with the appropriate documentation–since all owe to the Office the continuing duty to disclose.[2]

---

[2] See supplement of 17 June, 1999. The Patent and Trademark Office is relying on petitioner's duty of candor and good faith and accepting a statement made by Petitioner. See Changes to Patent Practice and Procedure, 62 Fed. Reg. at 53160 and 53178, 1203 Off. Gaz. Pat. Office at 88 and 103 (responses to comments 64 and 109)(applicant obligated under 37 C.F.R. §10.18 to inquire into the underlying facts and circumstances when providing statements to the Patent and Trademark Office).

Specifically, the regulations at 37 C.F.R. §10.18 provide:

§ 10.18 Signature and certificate for correspondence filed in the Patent and Trademark Office.
(a) For all documents filed in the Office in patent, trademark, and other non-patent matters, except for correspondence that is required to be

STATUTES, REGULATIONS AND ANALYSIS

Congress has authorized the Commissioner to "revive an application if the delay is shown to the satisfaction of the Commissioner to have been "unavoidable." 35 U.S.C. §133 (1994).[3]

The regulations at 37 C.F.R. §1.137(a) and (b) set forth the requirements for a petitioner to revive a previously unavoidably or unintentionally, respectively, abandoned application under this congressional grant of authority. The language of 35 U.S.C. §133 and 37 C.F.R. §1.137(a) is clear, unambiguous, and without qualification: the delay in tendering the reply to the outstanding Office action, as well as filing the first petition seeking revival, must have been unavoidable for the reply now to be accepted on petition.[4]

---

signed by the applicant or party, each piece of correspondence filed by a practitioner in the Patent and Trademark Office must bear a signature by such practitioner complying with the provisions of §1.4(d), §1.4(e), or § 2.193(c)(1) of this chapter.
(b) By presenting to the Office (whether by signing, filing, submitting, or later advocating) any paper, the party presenting such paper, whether a practitioner or non-practitioner, is certifying that—

(1) All statements made therein of the party's own knowledge are true, all statements made therein on information and belief are believed to be true, and all statements made therein are made with the knowledge that whoever, in any matter within the jurisdiction of the Patent and Trademark Office, knowingly and willfully falsifies, conceals, or covers up by any trick, scheme, or device a material fact, or makes any false, fictitious or fraudulent statements or representations, or makes or uses any false writing or document knowing the same to contain any false, fictitious or fraudulent statement or entry, shall be subject to the penalties set forth under 18 U.S.C. 1001; and that violations of this paragraph may jeopardize the validity of the application or document, or the validity or enforceability of any patent, trademark registration, or certificate resulting therefrom; and

(2) To the best of the party's knowledge, information and belief, formed after an inquiry reasonable under the circumstances, that —

(i) The paper is not being presented for any improper purpose, such as to harass someone or to cause unnecessary delay or needless increase in the cost of prosecution before the Office;

(ii) The claims and other legal contentions therein are warranted by existing law or by a nonfrivolous argument for the extension, modification, or reversal of existing law or the establishment of new law;

(iii) The allegations and other factual contentions have evidentiary support or, if specifically so identified, are likely to have evidentiary support after a reasonable opportunity for further investigation or discovery; and

(iv) The denials of factual contentions are warranted on the evidence, or if specifically so identified, are reasonably based on a lack of information or belief.

(c) Violations of paragraph (b)(1) of this section by a practitioner or non-practitioner may jeopardize the validity of the application or document, or the validity or enforceability of any patent, trademark registration, or certificate resulting therefrom. Violations of any of paragraphs (b)(2)(i) through (iv) of this section are, after notice and reasonable opportunity to respond, subject to such sanctions as deemed appropriate by the Commissioner, or the Commissioner's designee, which may include, but are not limited to, any combination of —

(1) Holding certain facts to have been established;
(2) Returning papers;
(3) Precluding a party from filing a paper, or presenting or contesting an issue;
(4) Imposing a monetary sanction;
(5) Requiring a terminal disclaimer for the period of the delay; or
(6) Terminating the proceedings in the Patent and Trademark Office.

(d) Any practitioner violating the provisions of this section may also be subject to disciplinary action. See § 10.23(c)(15).
[Added 50 FR 5175, Feb. 6, 1985, effective Mar. 8, 1985; para. (a) revised, 58 FR 54494, Oct. 22, 1993, effective Nov. 22, 1993; paras. (a) & (b) revised, paras. (c) & (d) added, 62 FR 53131, Oct. 10, 1997, effective Dec. 1, 1997; para. (a) revised, 69 FR 56481, Sept. 21, 2004, effective Oct. 21, 2004]

[3] 35 U.S.C. §133 provides:
35 U.S.C. §133 Time for prosecuting application.
Upon failure of the applicant to prosecute the application within six months after any action therein, of which notice has been given or mailed to the applicant, or within such shorter time, not less than thirty days, as fixed by the Commissioner in such action, the application shall be regarded as abandoned by the parties thereto, unless it be shown to the satisfaction of the Commissioner that such delay was unavoidable.

[4] Therefore, by example, an unavoidable delay in the payment of the Filing Fee might occur if a reply is shipped by the US Postal Service, but due to catastrophic accident, the delivery is not made.

Delays in responding properly raise the question whether delays are unavoidable.[5] Where there is a question whether the delay was unavoidable, Petitioners must meet the burden of establishing that the delay was unavoidable within the meaning of 35 U.S.C. §133 and 37 C.F.R. §1.137(a).[6]

And the Petitioner must be diligent in attending to the matter.[7] Failure to do so does not constitute the care required under Pratt, and so cannot satisfy the test for diligence and due care.

(By contrast, unintentional delays are those that do not satisfy the very strict statutory and regulatory requirements of unavoidable delay, and also, by definition, are not intentional.[8]))

Allegations as to the Request to
Withdraw the Holding of Abandonment

The courts have determined the construct for properly supporting a petition seeking withdrawal of a holding of abandonment.[9]

The commentary at MPEP §711.03(c) provides:

* * *

> **A. Petition To Withdraw Holding of Abandonment Based on Failure To Receive Office Action**
>
> In *Delgar v. Schulyer*, 172 USPQ 513 (D.D.C. 1971), the court decided that the Office should mail a new Notice of Allowance in view of the evidence presented in support of the contention that the applicant's representative did not receive the original Notice of Allowance. Under the reasoning of *Delgar*, an allegation that an Office action was never received may be considered in a petition to withdraw the holding of abandonment. If adequately supported, the Office may grant the petition to withdraw the holding of abandonment and remail the Office action. That is, the reasoning of *Delgar* is applicable regardless of whether an application

---

[5] See: *Changes to Patent Practice and Procedure*; *Final Rule Notice*, 62 *Fed. Reg.* at 53158-59 (October 10, 1997), 1203 *Off. Gaz. Pat. Office* at 86-87 (October 21, 1997).

[6] See: In re Application of G, 11 USPQ2d 1378, 1380 (Comm'r Pats. 1989).

[7] See: Diligence in Filing Petitions to Revive and Petitions to Withdraw the Holding of Abandonment, 1124 Off. Gaz. Pat. Office 33 (March 19, 1991). It was and is Petitioner's burden to exercise diligence in seeking either to have the holding of abandonment withdrawn or the application revived. See 1124 Off. Gaz. Pat. Office supra.

[8] Therefore, by example, an unintentional delay in the reply might occur if the reply and transmittal form are to be prepared for shipment by the US Postal Service, but other pressing matters distract one's attention and the mail is not timely deposited for shipment.

[9] See: Delgar v. Schulyer, 172 USPQ 513 (D.D.C. 1971).

> is held abandoned for failure to timely pay the issue fee (35 U.S.C. 151) or for failure to prosecute (35 U.S.C. 133). To minimize costs and burdens to practitioners and the Office, the Office has modified the showing required to establish nonreceipt of an Office action. The showing required to establish nonreceipt of an Office communication must include a statement from the practitioner stating that the Office communication was not received by the practitioner and attesting to the fact that a search of the file jacket and docket records indicates that the Office communication was not received. A copy of the docket record where the nonreceived Office communication would have been entered had it been received and docketed must be attached to and referenced in practitioner's statement. For example, if a three month period for reply was set in the nonreceived Office action, a copy of the docket report showing all replies docketed for a date three months from the mail date of the nonreceived Office action must be submitted as documentary proof of nonreceipt of the Office action.
>
> * **
>
> The showing outlined above may not be sufficient if there are circumstances that point to a conclusion that the Office action may have been lost after receipt rather than a conclusion that the Office action was lost in the mail (e.g., if the practitioner has a history of not receiving Office actions).
>
> Evidence of nonreceipt of an Office communication or action (e.g., Notice of Abandonment or an advisory action) other than that action to which reply was required to avoid abandonment would not warrant withdrawal of the holding of abandonment. Abandonment takes place by operation of law for failure to reply to an Office action or timely pay the issue fee, not by operation of the mailing of a Notice of Abandonment. See *Lorenz v. Finkl*, 333 F.2d 885, 889-90, 142 USPQ 26, 29-30 (CCPA 1964); *Krahn v. Commissioner*, 15 USPQ2d 1823, 1824 (E.D. Va 1990); *In re Application of Fischer*, 6 USPQ2d 1573, 1574 (Comm'r Pat. 1988). (Emphasis supplied.)
>
> * * *

Moreover, the regulation places upon Petitioner a diligence requirement to seek relief within two (2) months of the act complained of.

It appears that Petitioner has satisfied the requirements described above.

CONCLUSION

It appears that Petitioner has satisfied the burdens set forth in Delgar v. Schulyer, the petition as considered under 37 C.F.R. §1.181 is **granted**.

The instant application is released to Technology Center 3600 for further processing in due course, and with express instructions to remail the 27 February, 2006, Office action and reset the period for reply thereto.

While telephone inquiries regarding this decision may be directed to the undersigned at (571) 272-3214, it is noted that all practice before the Office is in writing (see: 37 C.F.R. §1.2[10]) and the proper authority for action on any matter in this regard are the statutes (35 U.S.C.), regulations (37 C.F.R.) and the commentary on policy (MPEP). Therefore, no telephone discussion may be controlling or considered authority for Petitioner's action(s).

John J. Gillon, Jr.
Senior Attorney
Office of Petitions

Encl

---

[10] The regulations at 37 C.F.R. §1.2 provide:
§1.2 Business to be transacted in writing.
All business with the Patent and Trademark Office should be transacted in writing.The personal attendance of applicants or their attorneys or agents at the Patent and Trademark Office is unnecessary. The action of the Patent and Trademark Office will be based exclusively on the written record in the Office. No attention will be paid to any alleged oral promise, stipulation,or understanding in relation to which there is disagreement or doubt.

UNITED STATES PATENT AND TRADEMARK OFFICE

UNITED STATES DEPARTMENT OF COMMERCE
United States Patent and Trademark Office
Address: COMMISSIONER FOR PATENTS
P.O. Box 1450
Alexandria, Virginia 22313-1450
www.uspto.gov

APPLICATION NO.	FILING DATE	FIRST NAMED INVENTOR	ATTORNEY DOCKET NO.	CONFIRMATION NO.
10/518,748	07/26/2005	Hermann Raabe	095309.55705US	1320

23911 7590 02/27/2006

CROWELL & MORING LLP
INTELLECTUAL PROPERTY GROUP
P.O. BOX 14300
WASHINGTON, DC 20044-4300

EXAMINER
PILKINGTON, JAMES

ART UNIT	PAPER NUMBER
3682	

DATE MAILED: 02/27/2006

Please find below and/or attached an Office communication concerning this application or proceeding.

Office Action Summary	Application No.	Applicant(s)	
	10/518,748	RAABE ET AL.	
	Examiner	Art Unit	
	James Pilkington	3682	

-- The MAILING DATE of this communication appears on the cover sheet with the correspondence address --

Period for Reply

A SHORTENED STATUTORY PERIOD FOR REPLY IS SET TO EXPIRE 3 MONTH(S) OR THIRTY (30) DAYS, WHICHEVER IS LONGER, FROM THE MAILING DATE OF THIS COMMUNICATION.

- Extensions of time may be available under the provisions of 37 CFR 1.136(a). In no event, however, may a reply be timely filed after SIX (6) MONTHS from the mailing date of this communication.
- If NO period for reply is specified above, the maximum statutory period will apply and will expire SIX (6) MONTHS from the mailing date of this communication.
- Failure to reply within the set or extended period for reply will, by statute, cause the application to become ABANDONED (35 U.S.C. § 133). Any reply received by the Office later than three months after the mailing date of this communication, even if timely filed, may reduce any earned patent term adjustment. See 37 CFR 1.704(b).

Status

1)☒ Responsive to communication(s) filed on 01 September 2005.

2a)☐ This action is **FINAL**. 2b)☒ This action is non-final.

3)☐ Since this application is in condition for allowance except for formal matters, prosecution as to the merits is closed in accordance with the practice under *Ex parte Quayle*, 1935 C.D. 11, 453 O.G. 213.

Disposition of Claims

4)☒ Claim(s) 1-15 is/are pending in the application.

4a) Of the above claim(s) _____ is/are withdrawn from consideration.

5)☐ Claim(s) _____ is/are allowed.

6)☒ Claim(s) 1-15 is/are rejected.

7)☒ Claim(s) 2 is/are objected to.

8)☐ Claim(s) _____ are subject to restriction and/or election requirement.

Application Papers

9)☐ The specification is objected to by the Examiner.

10)☒ The drawing(s) filed on _____ is/are: a)☐ accepted or b)☒ objected to by the Examiner.

Applicant may not request that any objection to the drawing(s) be held in abeyance. See 37 CFR 1.85(a).

Replacement drawing sheet(s) including the correction is required if the drawing(s) is objected to. See 37 CFR 1.121(d).

11)☐ The oath or declaration is objected to by the Examiner. Note the attached Office Action or form PTO-152.

Priority under 35 U.S.C. § 119

12)☒ Acknowledgment is made of a claim for foreign priority under 35 U.S.C. § 119(a)-(d) or (f).

a)☒ All b)☐ Some * c)☐ None of:

1.☒ Certified copies of the priority documents have been received.

2.☐ Certified copies of the priority documents have been received in Application No. _____.

3.☐ Copies of the certified copies of the priority documents have been received in this National Stage application from the International Bureau (PCT Rule 17.2(a)).

* See the attached detailed Office action for a list of the certified copies not received.

Attachment(s)

1) ☒ Notice of References Cited (PTO-892)

2) ☐ Notice of Draftsperson's Patent Drawing Review (PTO-948)

3) ☒ Information Disclosure Statement(s) (PTO-1449 or PTO/SB/08) Paper No(s)/Mail Date 12/22/2004.

4) ☐ Interview Summary (PTO-413) Paper No(s)/Mail Date. _____.

5) ☐ Notice of Informal Patent Application (PTO-152)

6) ☐ Other: _____.

DETAILED ACTION

Drawings

The drawings are objected to under 37 CFR 1.83(a). The drawings must show every feature of the invention specified in the claims. The steering wheel must be shown or the feature(s) canceled from the claim(s). Also, the torque-transmitting joint (8) is not shown "forming the connection between the steering spindle (2) and the steering shaft (3)," as cited in clm 1. This must be shown or the feature(s) canceled from the claim(s). No new matter should be entered.

Corrected drawing sheets in compliance with 37 CFR 1.121(d) are required in reply to the Office action to avoid abandonment of the application. Any amended replacement drawing sheet should include all of the figures appearing on the immediate prior version of the sheet, even if only one figure is being amended. The figure or figure number of an amended drawing should not be labeled as "amended." If a drawing figure is to be canceled, the appropriate figure must be removed from the replacement sheet, and where necessary, the remaining figures must be renumbered and appropriate changes made to the brief description of the several views of the drawings for consistency. Additional replacement sheets may be necessary to show the renumbering of the remaining figures. Each drawing sheet submitted after the filing date of an application must be labeled in the top margin as either "Replacement Sheet" or "New Sheet" pursuant to 37 CFR 1.121(d). If the changes are not accepted by the examiner, the applicant will be notified and informed of any required corrective action in the next Office action. The objection to the drawings will not be held in abeyance.

Claim Objections

Claim 2 is objected to because of the following informalities:

- In line 4 of the clm, "that end" should be - - the end - -

Appropriate correction is required.

Claim Rejections - 35 USC § 112

The following is a quotation of the first paragraph of 35 U.S.C. 112:

> The specification shall contain a written description of the invention, and of the manner and process of making and using it, in such full, clear, concise, and exact terms as to enable any person skilled in the art to which it pertains, or with which it is most nearly connected, to make and use the same and shall set forth the best mode contemplated by the inventor of carrying out his invention.

Claim 1 is rejected under 35 U.S.C. 112, first paragraph, as failing to comply with the written description requirement. The claim(s) contains subject matter which was not described in the specification in such a way as to reasonably convey to one skilled in the relevant art that the inventor(s), at the time the application was filed, had possession of the claimed invention. What is the "torque-transmitting joint," as cited in clm 1? Is the "torque-transmitting joint" the same as a universal joint?

Claim Rejections - 35 USC § 103

The following is a quotation of 35 U.S.C. 103(a) which forms the basis for all obviousness rejections set forth in this Office action:

> (a) A patent may not be obtained though the invention is not identically disclosed or described as set forth in section 102 of this title, if the differences between the subject matter sought to be patented and the prior art are such that the subject matter as a whole would have been obvious at the time the invention was made to a person having ordinary skill in the art to which said subject matter pertains. Patentability shall not be negatived by the manner in which the invention was made.

Claims 1- 15, as best understood, are rejected under 35 U.S.C. 103(a) as being unpatentable over Ganser, USP 5,947,517 in view of Bouchard, FRP 1,125,053.

Re clm 1, Ganser discloses a steering spindle (8) which bears a steering wheel (2), a steering shaft (5) connected to the steering spindle (8), a torque-transmitting joint (See Fig 1 below) forming the connection between the steering spindle (8) and the steering shaft (5) and a second moveable link element (Fig 1 below).

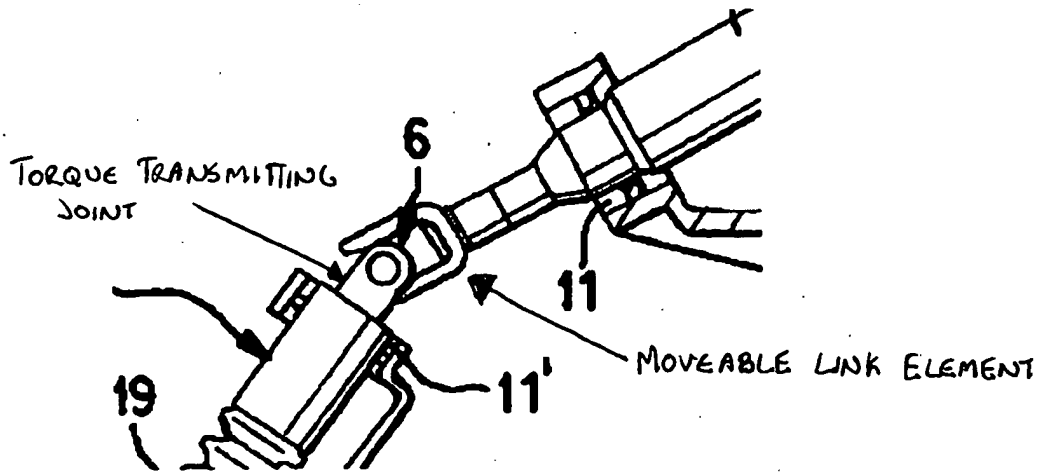

Figure 1. Ganser's torque-transmitting joint.

Ganser does not disclose that said second moveable link element is an axially moveable for axial length compensation comprising at least one coupling member with two parallel axes of rotation, and a spigot cross element being coupled to the end of the steering spindle which likes opposite the steering wheel, one axis of the spigot cross element forming an axis of rotation for the coupling member, wherein the steering shaft has a flange which ends at a distance from the longitudinal axis of the steering shaft, the flange executing a pivot movement about the upper axis of rotation of the coupling member.

Bouchard teaches a moveable link element (Fig 4/5 or see Fig 2 below) for the purpose of allowing for relative variations of the orientations and respective axial

positions (col 1) comprising at least one coupling member (1) with two parallel axes of rotation (2,3), and a spigot cross element (4) being coupled to the end of the steering spindle (5) which lies opposite the steering wheel, one axis of the spigot cross element (4) forming an axis of rotation (2) for the coupling member (1), wherein the steering shaft (6) has a flange (7) which ends at a distance from the longitudinal axis of the steering shaft, the flange executing a pivot movement about the upper axis of rotation (3) of the coupling member (1).

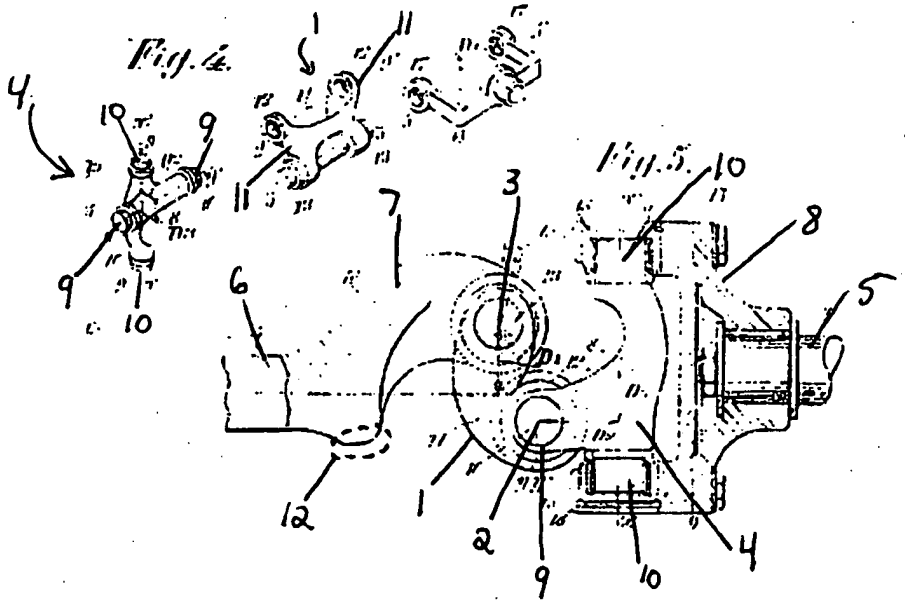

Figure 2. Bouchard's extensible joint for motor vehicles. The examiner has added character references to better explain the drawing.

It would have been obvious to one having ordinary skill in the art at the time of the invention to modify the teachings of Ganser and provide an axially moveable link element, as taught by Bouchard, for the purpose of allowing for relative variations of the orientations and respective axial positions.

Re clm. 2, Bouchard discloses the spigot cross element (4) being mounted in a forked joint (8). From the combined invention of Ganser and Bouchard discussed above said forked joint will be arranged at the end of the steering spindle which lies opposite the steering wheel.

Re clm. 3, Bouchard discloses two transverse spigots (9) of the spigot cross element (4) form a transverse bolt of the coupling member (1).

Re clm. 4, Bouchard discloses two longitudinal spigots (10) of the spigot cross element (4) form a pivot axis of the forked joint (8).

Re clm. 5, Bouchard discloses that the coupling member (1) comprises two side plates (11) through which two transverse bolts pass, the transverse bolts form the axes of rotation (2,3) of the coupling member (1).

Re clms. 6, 8, 10, 12 and 14, Bouchard discloses the flange being provided with an additional mass (12).

Re clms. 7, 9, 11, 13 and 15 Gasner discloses the steering shaft (5) being formed with a corrugated tube section (19).

It is noted that at this time an English translation of the Bouchard document is not available. However, the examiner has requested a translation.

Conclusion

Any inquiry concerning this communication or earlier communications from the examiner should be directed to James Pilkington whose telephone number is (571) 272-5052. The examiner can normally be reached on Monday-Friday 8:00AM-4:00PM.

If attempts to reach the examiner by telephone are unsuccessful, the examiner's supervisor, Richard Ridley can be reached on (571) 272-6917. The fax phone number for the organization where this application or proceeding is assigned is 571-273-8300.

Information regarding the status of an application may be obtained from the Patent Application Information Retrieval (PAIR) system. Status information for published applications may be obtained from either Private PAIR or Public PAIR. Status information for unpublished applications is available through Private PAIR only. For more information about the PAIR system, see http://pair-direct.uspto.gov. Should you have questions on access to the Private PAIR system, contact the Electronic Business Center (EBC) at 866-217-9197 (toll-free).

James Pilkington
2-15-2006

RICHARD RIDLEY
SUPERVISORY PATENT EXAMINER

UNITED STATES PATENT AND TRADEMARK OFFICE

COMMISSIONER FOR PATENTS
UNITED STATES PATENT AND TRADEMARK OFFICE
P.O. BOX 1450
ALEXANDRIA, VA 22313-1450
www.uspto.gov

HUNTON & WILLIAMS LLP
INTELLECTUAL PROPERTY DEPARTMENT
1900 K STREET, N.W.
SUITE 1200
WASHINGTON DC 20006-1109

COPY MAILED

NOV 0 8 2006

OFFICE OF PETITIONS

Applicant: Nakama
Appl. No.: 10/518,759
International Filing Date: December 26, 2003
Title: REMEDY FOR PEMPHIGOID
Attorney Docket No.: 58777.000017
Pub. No.: US 2006/0104947 A1
Pub. Date: January 22, 2004

This is a decision on the request for republication of patent application publication under 37 CFR 1.221(a), filed on July 28, 2006, for the above-identified application. The instant request is being treated as a request for republication, even thought applicant's representative appears to be making arguments that there is a material Office error in the publication.

The request under 37 CFR 1.221(a) is DISMISSED.

Applicant requests that the application be republished.

On August 8, 2005, a Filing Receipt was mailed by the Office, which listed the assignment information as Daijchi Suntory Pharma Co., Ltd. and Maruho Co. Ltdl. To avoid this type of problem in the future, applicant's representative should make request a corrected filing receipt along with a supplemental application data sheet.

Assignment information must be provided with the application data sheet or transmittal letter to be included on the publication.[1]

37 CFR 1.221(a) requires "a copy of the application in compliance with the Office electronic filing system requirements and be accompanied by the publication fee set forth in § 1.18(d) and the processing fee set forth in § 1.17(i)". If the request for republication does not comply with the electronic filing system requirements, the republication will not take place and the publication fee set forth in § 1.18(d) will be refunded. The processing fee will be retained.

[1] See Comment 59, Changes to Implement Eighteen-Month Publication of Patent Applications, 65 FR 57023, 57047 (Sept. 20, 2000), 1239 Off. Gaz. Pat. Office Notices 63, 84 (Oct. 10, 2000) (final rule).

The applicant did not supply a copy of the application in compliance with the Office electronic filing system, as required by 37 CFR 1.221(a). The publication fee and processing fee were not charged. The request for republication does not comply with the electronic filing system requirements, thus republication will not take place and the processing fee will be retained.

Any request for republication under 37 CFR 1.221(a), must be submitted via the EFS system, as a Pre-Grant publication submission.

Applicant's deposit account has not been charged.

Any questions or requests for reconsideration of the decision, should be addressed as follows:

By mail to: Mail Stop PGPUB
Commissioner for Patents
P.O. Box 1450
Alexandria, Va. 22313-1450

By facsimile: 571-273-8300

Inquiries relating to this matter may be directed to Mark Polutta at (571) 272-7709 (voice).

Mark Polutta
Senior Legal Advisor
Office of Patent Legal Administration
Office of the Deputy Commissioner
for Patent Examination Policy

\United States Patent and Trademark Office

Commissioner for Patents
United States Patent and Trademark Office
P.O. Box 1450
Alexandria, VA 22313-1450
www.uspto.gov

17 SEP 2007

Mark M. Friedman
Polkinghorn
9003 Florin Way
Upper Marlboro MD 20772

In re Application of	:	
Averbuch et al.	:	
Application No.: 10/518,766	:	
PCT No.: PCT/IL04/00758	:	
Int. Filing Date: 18 August 2004	:	DECISION
Priority Date: 28 January 2004	:	
Attorney Docket No.: 27/243	:	
For: Method Of Transmitting Data	:	
Using Space Time Block Codes	:	

This is in response to the correspondence filed 13 March 2007, which is being treated as a petition under 37 CFR 1.181.

BACKGROUND

This international application was filed on 18 August 2004, claimed an earliest priority date of 28 January 2004, and designated the United States. The International Bureau transmitted a copy of the published international application to the USPTO on 11 August 2005. Consequently, the thirty month period for payment of the basic national fee in the United States expired as of midnight on 28 July 2006. On 21 December 2004, applicants filed *inter alia* the basic national fee.

On 28 February 2007, a Notification of Missing Requirements (Form PCT/DO/EO/905) was mailed to applicants, requiring the submission of an executed oath or declaration of the inventors in compliance with 37 CFR 1.497(a) and (b) and a surcharge under 37 CFR 1.492(h).

DISCUSSION

Petitioner states in part that

> Enclosed herein is PTO Form, as well as an additional copy of the signed declaration, which was filed with the application on Dec. 21, 2004 (copy of postcard stamped by USPTO mailroom attached). Said declaration identifies the application by the international application number and filing date. We therefore believe that the declaration was timely fi led and no surcharge is due.

The instant petition is accompanied by a declaration document and a copy of a return postcard receipt which itemizes inter alia a "Declaration" and is stamped as "Rec'd PCT/PTO 21 DEC 2004."

MPEP 503 states in part that

> A postcard receipt which itemizes and properly identifies the items which are being filed serves as *prima facie* evidence of receipt in the USPTO of all the items listed thereon on the date stamped thereon by the USPTO.

Following the policy described at MPEP 503, the copy of the declaration document received on 13 March 2007 is being regarded as a copy of the declaration originally filed on 21 December 2004, and itemized on the postcard receipt. Review of the declaration reveals that it is acceptable for purposes of compliance with 37 CFR 1.497(a) and (b). Therefore, the Notification of Missing Requirements mailed on 28 February 2007 is hereby **VACATED**.

CONCLUSION

The petition is **GRANTED**.

This application is being returned to the National Stage Processing Branch for further processing. Its date under 35 U.S.C. 371(c)(1), (2) and (4) is **21 December 2004.**

George Dombroske
PCT Legal Examiner
Office of PCT Legal Administration
Tel: (571) 272-3283
Fax: (571) 273-0459

SPE RESPONSE FOR CERTIFICATE OF CORRECTION

Paper No.: _____

DATE : 03/11/09

TO SPE OF : ART UNIT 3746 (3700)

SUBJECT : Request for Certificate of Correction for Appl. No.: 10/518,767 Patent No.: 7,404,286
Attn: Ted Kim

Please respond to this request for a certificat e of correction within 7 days.

FOR IFW FILES:

Please review the requested changes/corrections as shown in the **COCIN** document(s) in the IFW application image. No new matter should be introduced, nor should the scope or meaning of the claims be changed.

Please complete the response (see below) and forward the completed response to scanning using document code **COCX**.

FOR PAPER FILES:

Please review the requested changes/corrections as shown in the attached certificate of correction. Please complete this form (see below) and forward it with the file to:

Certificates of Correction Branch (C of C)
South Tower - 9A22
Palm Location 7580

*** Please see the COCIN Document dated 8/11/08. Enter as certificate of correction or corrected p atent?**

Ernest C. White, LIE
Certificates of Correction Branch
703-308-9390 ext.122

Thank You For Your Assistance

The request for issuing the above -identified correction(s) is hereby:
Note your decision on the appropriate box.

- ☐ **Approved** — **All** changes apply.
- ☐ **Approved in Part** — Specify below which changes **do not** apply.
- X **Denied** — State the reasons for denial below.

Comments: None of the corrections are made re lative to the issued patent. Thus they are improper.

All changes must be made relative to column and line number and location etc. of the issued patent

DEVON KRAMER
SUPERVISORY PATENT EXAMINER

SPE AU 3746

SPE RESPONSE FOR CERTIFICATE OF CORRECTION

SPE Art Unit

UNITED STATES DEPARTMENT OF COMMERCE
COMMISSIONER FOR PATENTS
P. O. BOX 1450
ALEXANDRIA, VA 22313-1450

Date : 3/19/2009
Patent No. : 7,404,2864 B2
Serial No. : 10/518,767
Inventor(s) : Lior
Issue Date : July 29, 2008
Title : **ORBITING COMBUSTION NOZZLE ENGINE**
Doc./File No. : **1133/16**

Re: Certificate of Correction (Reconsideration)

Consideration has been given your request for a certificate of correction (reconsideration), for the above-identified patent under the provisions of Rule 1.322 and 1.323.

Respecting the alleged error in your request, per telephone and email communication with Sharon Links concerning a request for a certificate of correction for the beforementioned patent number, the request has been denied. Attached is a completed PTOL-306 (Spe Response) form by the examiner of record Ted Kim, please note the comments section.

Further consideration will be given concerning this matter upon receipt of a request for **Reconsideration** (reconsideration should be accompanied by supporting document(s) such as, amendment, postcard receipt, 1449/892, etc.) and should be filed and directed to Decisions & Certificates of Correction Branch.

Ernest C. White, *LIE* (703) 308-9390 x122
Mary F. Diggs, *Supervisor* (703) 308-9390 x125
Decisions & Certificates of Correction Branch

DR. MARK M. FRIEDMAN
C/O BILL POLKINGHORN - DISCOVERY DISPATCH
9003 FLORIN WAY
UPPER MARLBORO MD 20772

ECW

UNITED STATES PATENT AND TRADEMARK OFFICE

COMMISSIONER FOR PATENTS
UNITED STATES PATENT AND TRADEMARK OFFICE
P.O. BOX 1450
ALEXANDRIA, VA 22313-1450
www.uspto.gov

FINNEGAN, HENDERSON, FARABOW, GARRETT & DUNNER
LLP
901 NEW YORK AVENUE, NW
WASHINGTON DC 20001-4413

COPY MAILED
MAR 13 2006
OFFICE OF PETITIONS

In re Application of
Chevallet et al.
Application No. 10/518,787
International Filing Date: May 26, 2003
For: GAS SEPARATION DEVICES
Attorney Docket No: 07552.0050
Pub. No.: US 2005/0247203 A1
Pub. Date: November 10, 2005

This is a decision on the request for correction of patent application publication under 37 CFR 1.221 (b), filed on December 19, 2005, for the above-identified application.

The request is DISMISSED.

The instant request is that the application be republished because the front page of the patent application publication includes a material mistake, as Francesco Ribolzi one of the inventors is omitted on the front page of the publication.

37 CFR 1.221 (b) is applicable "only when the Office makes a material mistake which is apparent from Office records." A material mistake must affect the public's ability to appreciate the technical disclosure of the patent application publication, to determine the scope of the patent application publication, or to determine the scope of the provisional rights that an applicant may seek to enforce upon issuance of a patent. [1] The instant request does not identify a material mistake in the publication made by the office.

The error in the omission of Francesco Ribolzi from the list of the inventors on the front page of the publication is an Office error, but it is not a material error under 37 CFR 1.221(b). The error does not affect the public's ability to appreciate the technical disclosure of the patent application publication, to determine the scope of the patent application publication or to determine the scope of the provisional rights that an applicant may seek to enforce upon issuance of a patent.

On July 22, 2005, a Filing Receipt was mailed by the Office, which improperly listed the inventive entity. To avoid this type of problem in the future, applicant's representative should review the Filing Receipt and make a request for a Corrected Filing Receipt.

---

[1] Changes to Implement Eighteen-Month Publication of Patent Applications, 65 FR 57023, 57038 (Sept. 20, 2000), 1239, Off. Gaz. Pat. Office Notices 63, 75 (Oct 10, 2000) (final rule).

The applicant is advised that a "request for republication of an application previously published" may be filed under 37 CFR 1.221 (a). Such a request for republication "must include a copy of the application compliance with the Office's electronic filing system requirements and be accompanied by the publication fee set forth in § 1.18 (d) and the processing fee set forth in § 1.17 (i)." If the request for republication does not comply with the electronic filing system requirements, the republication will not take place and the publication fee set forth in § 1.18 (d) will be refunded. The processing fee will be retained.

Any request for republication under 37 CFR 1.221(a), must be submitted via the EFS system and questions or request for reconsideration of the decision, should be addressed as follows:

By mail to: Mail Stop PGPUB
Commissioner for Patents
P.O. Box 1450
Alexandria, Va. 22313-1450

By facsimile: 571-273-8300

Inquiries relating to this matter may be directed to Mark Polutta (703) 308-8122 (voice).

Mark Polutta
Legal Advisor
Office of Patent Legal Administration
Office of the Deputy Commissioner
for Patent Examination Policy

Enclosure: Corrected Filing Receipt

UNITED STATES PATENT AND TRADEMARK OFFICE

UNITED STATES DEPARTMENT OF COMMERCE
United States Patent and Trademark Office
Address: COMMISSIONER FOR PATENTS
P.O. Box 1450
Alexandria, Virginia 22313-1450
www.uspto.gov

APPL NO.	FILING OR 371 (c) DATE	ART UNIT	FIL FEE REC'D	ATTY.DOCKET NO	DRAWINGS	TOT CLMS	IND CLMS
10/518,787	06/16/2005	1724	3330	07552.0050-00000	3	66	3

CONFIRMATION NO. 8238

CORRECTED FILING RECEIPT

OC000000018270582

22852
FINNEGAN, HENDERSON, FARABOW, GARRETT & DUNNER LLP
901 NEW YORK AVENUE, NW
WASHINGTON, DC 20001-4413

Date Mailed: 03/13/2006

Receipt is acknowledged of this regular Patent Application. It will be considered in its order and you will be notified as to the results of the examination. Be sure to provide the U.S. APPLICATION NUMBER, FILING DATE, NAME OF APPLICANT, and TITLE OF INVENTION when inquiring about this application. Fees transmitted by check or draft are subject to collection. Please verify the accuracy of the data presented on this receipt. **If an error is noted on this Filing Receipt, please mail to the Commissioner for Patents P.O. Box 1450 Alexandria Va 22313-1450. Please provide a copy of this Filing Receipt with the changes noted thereon. If you received a "Notice to File Missing Parts" for this application, please submit any corrections to this Filing Receipt with your reply to the Notice. When the USPTO processes the reply to the Notice, the USPTO will generate another Filing Receipt incorporating the requested corrections (if appropriate).**

Applicant(s)

Jacques Chevallet, Serezin du Rhone, FRANCE;
Nicolas Semenzato, Lyon, FRANCE;
Alain Frugier, Tignieu, FRANCE;
Francesco Ribolzi, Modena, ITALY;

Power of Attorney: The patent practitioners associated with Customer Number **22852**.

Domestic Priority data as claimed by applicant

This application is a 371 of PCT/IB03/02281 05/26/2003

Foreign Applications

ITALY MI2002A001390 06/24/2002
ITALY MI2002A001389 06/24/2002

If Required, Foreign Filing License Granted: 03/13/2006

The country code and number of your priority application, to be used for filing abroad under the Paris Convention, is US10/518,787

Projected Publication Date: Not Applicable

Non-Publication Request: No

Early Publication Request: No

Title

Gas separation devices

Preliminary Class

096

PROTECTING YOUR INVENTION OUTSIDE THE UNITED STATES

Since the rights granted by a U.S. patent extend only throughout the territory of the United States and have no effect in a foreign country, an inventor who wishes patent protection in another country must apply for a patent in a specific country or in regional patent offices. Applicants may wish to consider the filing of an international application under the Patent Cooperation Treaty (PCT). An international (PCT) application generally has the same effect as a regular national patent application in each PCT-member country. The PCT process **simplifies** the filing of patent applications on the same invention in member countries, but **does not result** in a grant of "an international patent" and does not eliminate the need of applicants to file additional documents and fees in countries where patent protection is desired.

Almost every country has its own patent law, and a person desiring a patent in a particular country must make an application for patent in that country in accordance with its particular laws. Since the laws of many countries differ in various respects from the patent law of the United States, applicants are advised to seek guidance from specific foreign countries to ensure that patent rights are not lost prematurely.

Applicants also are advised that in the case of inventions made in the United States, the Director of the USPTO must issue a license before applicants can apply for a patent in a foreign country. The filing of a U.S. patent application serves as a request for a foreign filing license. The application's filing receipt contains further information and guidance as to the status of applicant's license for foreign filing.

Applicants may wish to consult the USPTO booklet, "General Information Concerning Patents" (specifically, the section entitled "Treaties and Foreign Patents") for more information on timeframes and deadlines for filing foreign patent applications. The guide is available either by contacting the USPTO Contact Center at 800-786-9199, or it can be viewed on the USPTO website at http://www.uspto.gov/web/offices/pac/doc/general/index.html.

For information on preventing theft of your intellectual property (patents, trademarks and copyrights), you may wish to consult the U.S. Government website, http://www.stopfakes.gov. Part of a Department of Commerce initiative, this website includes self-help "toolkits" giving innovators guidance on how to protect intellectual property in specific countries such as China, Korea and Mexico. For questions regarding patent enforcement issues, applicants may call the U.S. Government hotline at 1-866-999-HALT (1-866-999-4158).

LICENSE FOR FOREIGN FILING UNDER
Title 35, United States Code, Section 184
Title 37, Code of Federal Regulations, 5.11 & 5.15

GRANTED

The applicant has been granted a license under 35 U.S.C. 184, if the phrase "IF REQUIRED, FOREIGN FILING LICENSE GRANTED" followed by a date appears on this form. Such licenses are issued in all applications where the conditions for issuance of a license have been met, regardless of whether or not a license may be required as set forth in 37 CFR 5.15. The scope and limitations of this license are set forth in 37 CFR 5.15(a) unless an earlier license has been issued under 37 CFR 5.15(b). The license is subject to revocation upon written notification. The

date indicated is the effective date of the license, unless an earlier license of similar scope has been granted under 37 CFR 5.13 or 5.14.

This license is to be retained by the licensee and may be used at any time on or after the effective date thereof unless it is revoked. This license is automatically transferred to any related applications(s) filed under 37 CFR 1.53(d). This license is not retroactive.

The grant of a license does not in any way lessen the responsibility of a licensee for the security of the subject matter as imposed by any Government contract or the provisions of existing laws relating to espionage and the national security or the export of technical data. Licensees should apprise themselves of current regulations especially with respect to certain countries, of other agencies, particularly the Office of Defense Trade Controls, Department of State (with respect to Arms, Munitions and Implements of War (22 CFR 121-128)); the Bureau of Industry and Security, Department of Commerce (15 CFR parts 730-774); the Office of Foreign Assets Control, Department of Treasury (31 CFR Parts 500+) and the Department of Energy.

NOT GRANTED

No license under 35 U.S.C. 184 has been granted at this time, if the phrase "IF REQUIRED, FOREIGN FILING LICENSE GRANTED" DOES NOT appear on this form. Applicant may still petition for a license under 37 CFR 5.12, if a license is desired before the expiration of 6 months from the filing date of the application. If 6 months has lapsed from the filing date of this application and the licensee has not received any indication of a secrecy order under 35 U.S.C. 181, the licensee may foreign file the application pursuant to 37 CFR 5.15(b).

UNITED STATES DEPARTMENT OF COMMERCE
Patent and Trademark Office
ASSISTANT SECRETARY OF COMMERCE AND
COMMISSIONER OF PATENTS AND TRADEMARKS
Washington, DC 20231

5/6/09

Patent No. :7517387
Inventor(s) :Jacques CHEVALLET et al.
Issued : 4/14/2009
Title : Gas Separation Devices
Atty.doc./File No.

Request for Certificates of Correction

Consideration has been given to your request for the issuance of a Certificate of Correction, for the above – identified patent under the provisions of CFR 1.322.

Inspection of the application for the patent reveals item [57] and claim 42 & 57 is printed in accordance with the record and please show evidence of an amendment or document. Therefore being no fault on the Patent and Trademark Office, It has no authority to issue a certificate of correction under the provision of 1.322.

In view of the forgoing, your request in this matter, is hereby denied.

Future written correspondence concerning this matter should be filed and directed to Decisions & Certificates of Correction Branch.

Henry Randall
Mary Diggs
Decisions & Certificates
of Correction Branch
(703) 308-9390 Ext. 108

FINNEGAN HENDERSON FARABOW
GARRETT & DUNNER LLP
WASHINGTON, DC 20001-4413

HR/MD

UNITED STATES PATENT AND TRADEMARK OFFICE

UNITED STATES DEPARTMENT OF COMMERCE
United States Patent and Trademark Office
Address: COMMISSIONER FOR PATENTS
P.O. Box 1450
Alexandria, Virginia 22313-1450
www.uspto.gov

NIXON & VANDERHYE, PC
901 NORTH GLEBE ROAD, 11TH FLOOR
ARLINGTON, VA 22203

Mail Date: 07/09/2010

Applicant	: Adriano Malabarba	: DECISION ON REQUEST FOR
Patent Number	: 7655676	: RECALCULATION of PATENT
Issue Date	: 02/02/2010	: TERM ADJUSTMENT IN VIEW
Application No	: 10/518,802	: OF WYETH AND NOTICE OF INTENT TO
Filed	: 08/08/2005	: ISSUE CERTIFICATE OF CORRECTION
		:

The Request for Recalculation is **GRANTED** to the extent indicated.

The patent term adjustment has been determined to be **1213** days. The USPTO will *sua sponte* issue a certificate of correction reflecting the amount of PTA days determined by the recalculation.

Prior to the issuance of the certificate of correction, the USPTO will afford patentee an opportunity to be heard and request reconsideration. Accordingly, patentee has **one month or thirty (30) days**, whichever is longer, to file a request for reconsideration of this patent term adjustment calculation. See 35 U.S.C. 154(b)(3)(B)(ii) and 37 CFR 1.322(a)(4). No extensions of time will be granted under 37 CFR 1.136.

Patentee should use document code PET.OP if electronically filing a request for reconsideration of this patent term adjustment calculation. The patentee must also include the information required by 37 CFR 1.705(b)(2) and the fee required by 37 CFR 1.18(e). If patentee does not file a timely request for reconsideration of this patent term adjustment calculation including the information required by 37 CFR 1.705(b)(2) and the fee required by 37 CFR 1.18(e), the USPTO will issue a certificate of correction reflecting the PTA determination noted above.

Patentee should be aware that in order to preserve the right to review in the United States District Court for the District of Columbia of the USPTO patent term adjustment determination, patentee must ensure that he or she also take the steps required under 35 U.S.C. 154(b)(4)(A) in a timely manner. Nothing in the request for recalculation should be construed as providing an alternative time frame for commencing a civil action under 35 U.S.C. 154(b)(4)(A).

Any questions concerning this decision should be directed to the Office of Patent Legal Administration at 571-272-7702.

UNITED STATES PATENT AND TRADEMARK OFFICE

UNITED STATES DEPARTMENT OF COMMERCE
United States Patent and Trademark Office
Address: COMMISSIONER FOR PATENTS
P.O. Box 1450
Alexandria, Virginia 22313-1450
www.uspto.gov

NIXON & VANDERHYE, PC
901 NORTH GLEBE ROAD, 11TH FLOOR
ARLINGTON, VA 22203

Mail Date: 07/09/2010

Applicant	: Adriano Malabarba	: DECISION ON REQUEST FOR
Patent Number	: 7655676	: RECALCULATION of PATENT
Issue Date	: 02/02/2010	: TERM ADJUSTMENT IN VIEW
Application No	: 10/518,802	: OF WYETH AND NOTICE OF INTENT TO
Filed	: 08/08/2005	: ISSUE CERTIFICATE OF CORRECTION
		:

The Request for Recalculation is **GRANTED** to the extent indicated.

The patent term adjustment has been determined to be **1213** days. The USPTO will *sua sponte* issue a certificate of correction reflecting the amount of PTA days determined by the recalculation.

Prior to the issuance of the certificate of correction, the USPTO will afford patentee an opportunity to be heard and request reconsideration. Accordingly, patentee has **one month or thirty (30) days**, whichever is longer, to file a request for reconsideration of this patent term adjustment calculation. See 35 U.S.C. 154(b)(3)(B)(ii) and 37 CFR 1.322(a)(4). No extensions of time will be granted under 37 CFR 1.136.

Patentee should use document code PET.OP if electronically filing a request for reconsideration of this patent term adjustment calculation. The patentee must also include the information required by 37 CFR 1.705(b)(2) and the fee required by 37 CFR 1.18(e). If patentee does not file a timely request for reconsideration of this patent term adjustment calculation including the information required by 37 CFR 1.705(b)(2) and the fee required by 37 CFR 1.18(e), the USPTO will issue a certificate of correction reflecting the PTA determination noted above.

Patentee should be aware that in order to preserve the right to review in the United States District Court for the District of Columbia of the USPTO patent term adjustment determination, patentee must ensure that he or she also take the steps required under 35 U.S.C. 154(b)(4)(A) in a timely manner. Nothing in the request for recalculation should be construed as providing an alternative time frame for commencing a civil action under 35 U.S.C. 154(b)(4)(A).

Any questions concerning this decision should be directed to the Office of Patent Legal Administration at 571-272-7702.

22 DEC 2005

UNITED STATES PATENT AND TRADEMARK OFFICE

Commissioner for Patents
United States Patent and Trademark Office
P.O. Box 1450
Alexandria, VA 22313-1450
www.uspto.gov

Michael E. Hudzinski
FAY, SHARPE, FAGEN, MINNICH & McKEE, LLP
1100 Superior Ave., 7th Floor
Cleveland, OH 44114-2518

In re Application of :
KRAUS, Willi :
Application No.: 10/518,805 :
PCT No.: PCT/DE03/01861 : **DECISION**
Int. Filing Date: 05 June 2003 :
Priority Date: 19 June 2002 :
Attorney Docket No.: TRWZ 2 00280 :
For: CLOSURE COVER :

This is a decision on the documents filed via facsimile on 14 November 2005 and 21 December 2005 which are treated as a petition under 37 CFR 1.181. No fee is required.

BACKGROUND

On 23 May 2005, a Notification of Missing Requirements Under 35 U.S.C. 371 in the United States Designated/Elected Office (DO/EO/US) (Form PCT/DO/EO/905) was mailed indicating that an oath or declaration in compliance with 37 CFR 1.497(a) and (b) and a surcharge fee was required. Applicants were given two months to respond.

On 22 July 2005, applicant submitted a signed declaration and the surcharge fee. The declaration listed the surname of the sole inventor as "Willibald" while the international publication listed the surname as "Willi."

On 31 August 2005, a communication indicating that the declaration filed 22 July 2005 was not in compliance with 37 CFR 1.497(a) and (b) was mailed.

On 26 September 2005, applicants submitted a response claiming that the declaration was in compliance with 37 CFR 1.497(a) and (b) because the name of the inventor was appropriate as listed. Petitioner argued that the name "Willi" is a nickname or abbreviation of the actual surname "Willibald."

On 13 October 2005, a communication indicating that applicant's explanation was not acceptable and the declaration filed 22 July 2005 was not in compliance with 37 CFR 1.497(a) and (b) was mailed.

On 24 October 2005, applicant purportedly filed a response which was accompanied by, *inter alia*, a new declaration and a request for a three-month extension of time and fee. These papers were not located in the file.

On 14 November 2005, applicant submitted via facsimile a copy of the papers purportedly filed 24 October 2005.

On 21 December 2005, applicant resubmitted a copy of the papers purportedly filed 24 October 2005 along with a copy of the date-stamped postcard receipt for the 24 October 2005 response.

DISCUSSION

MPEP § 503 lists procedures to ensure receipt of any paper filed in the USPTO. Applicant must enclose a self-addressed postcard identifying all of the papers filed. The USPTO will stamp the receipt date on the card and place it on the outgoing mail. The identifying data on the card must clearly identify the paper for which receipt is requested. A postcard receipt which itemizes and properly identifies the papers which are being filed serves as prima facie evidence of receipt in the USPTO of all the items listed thereon on the date stamped thereon by the USPTO.

Applicant provided a copy of the date-stamped postcard receipt for documents submitted on 24 October 2005. The postcard receipt identified the application by the application number, docket number and title. The postcard receipt indicates that a "Declaration and Power of Attorney" was received in the USPTO. The postcard receipt is stamped "JC03 Rec'd PCT/PTO 24 OCT 2005" across its face. Moreover, USPTO financial records also show that a $1,020.00 extension fee was received on 24 October 2005.

Accordingly, applicant has provided *prima facie* evidence that a declaration was filed 24 October 2005.

CONCLUSION

In view of the above, applicant's petition under 37 CFR 1.181 is **GRANTED.**

The declaration filed 24 October 2005 is in compliance with 37 CFR 1.497(a) and (b). Applicant has completed the requirements for acceptance under 35 U.S.C. 371(c). The application has an international filing date of 05 June 2003, under 35 U.S.C. 363 and a 35 U.S.C. 371(c)(1), (c)(2) and (c)(4) date of 24 October 2005.

This application is being forwarded to the National Stage Processing Division of the Office of PCT Operations for continued processing.

James Thomson

James Thomson
Attorney Advisor
Office of PCT Legal Administration

Tel.: (571) 272-3302

UNITED STATES PATENT AND TRADEMARK OFFICE

Commissioner for Patents
United States Patent and Trademark Office
P.O. Box 1450
Alexandria, VA 22313-1450
www.uspto.gov

JAGTIANI + GUTTAG
10363-A DEMOCRACY LANE
FAIRFAX, VA 22030

COPY MAILED

APR 07 2008

OFFICE OF PETITIONS

In re Application of	:	
Peter Gibson, et al.	:	
Application No. 10/518,810	:	DECISION ON PETITION
Filed: April 20, 2006	:	TO WITHDRAW
Attorney Docket No. COCH-0130-US1	:	FROM RECORD
	:	

This is a decision on the Request to Withdraw as attorney or agent of record under 37 C.F.R. § 1.36(b), filed October 10, 2007 and October 18, 2007.

The request is **DISMISSED** as moot.

A review of the file record indicates that the power of attorney to Jagtiani & Guttag has been revoked by the assignee of the patent application on November 20, 2007. Accordingly, the request to withdraw under 37 C.F.R. § 1.36(b) is moot.

All future communications from the Office will continue to be directed to the below-listed address until otherwise notified by applicant.

Telephone inquires concerning this decision should be directed to undersigned at 571-272-1642.

April M. Wise
Petitions Examiner
Office of Petitions

cc: JAYNE ANDREWS, PATENT MANAGER
COCHLEAR LIMITED
14-16 MARS ROAD
LANE COVE, NSW 2066
AUSTRALIA

08 SEP 2006

#9

UNITED STATES PATENT AND TRADEMARK OFFICE

Commissioner for Patents
United States Patent and Trademark Office
P.O. Box 1450
Alexandria, VA 22313-1450
www.uspto.gov

JAGTIANI + GUTTAG
10363-A DEMOCRACY LANE
FAIRFAX VA 22030

In re Application of CARTER et al. Application No.: 10/518,813 PCT No.: PCT/AU03/00827 Int. Filing Date: 27 June 2003 Priority Date: 28 June 2002 Attorney Docket No.:COCH-0132-US1 For: MEDICAL DEVICE TESTING APPARATUS	DECISION ON REQUEST UNDER 37 CFR 1.497(d)

This is a decision on applicants' "Response to Notification of Defective Response", treated as a petition to correct inventorship under 37 CFR 1.497(d), and filed on 08 May 2006 in the United States Patent and Trademark Office (USPTO). Petitioner seeks to add David J. Bull as inventor in the above referenced application. The requisite $130 petition fee was paid. Petitioner also requests a three month extension of time, which is granted.

BACKGROUND

On 22 December 2004, applicant filed a Transmittal Letter requesting entry into the national stage in the United States of America under 35 U.S.C. § 371 with, *inter alia*, the requisite basic national fee.

On 27 October 2005, a Notification of Missing Requirements was mailed to applicant indicating that an oath or declaration, in compliance with 37 CFR 1.497(a) & (b), and the surcharge for filing the oath or declaration after the thirty month period, was required.

On 27 December 2005, applicant filed a response to the Notification of Missing Requirements. The declaration submitted identified David J. Bull as an inventor; however, the published international application did not identify him as such.

On24 January 2006, a Notification of Defective Response was mailed to applicant indicating that the declaration was not executed in compliance with 37 CFR 1.66 or 1.68; that is, inventor David John Bull is not listed on the published international application. Applicant was given one month within which to respond or the time period remaining in the Notification of Missing Requirements.

On 08 May 2006, applicant filed a petition for correction of inventorship, to add David J. Bull as an inventor. In addition to the $130 petition fee, Petitioner provided the statement of the inventor Mr. Bull in support of the correction of inventorship under 37 CFR 1.497(d). A declaration executed by the joint inventors was provided along with an Application Data Sheet.

DISCUSSION

Where the oath or declaration filed pursuant to 35 U.S.C. 371(c)(4) and 37 CFR 1.497(d) names an inventive entity different from the inventive entity set forth in the international application, the oath or declaration must be accompanied by: (1) a statement from each person

being added as an inventor that any error in inventorship occurred without deceptive intention on his or her part; (2) the fee set forth in § 1.17(i); and (3) if an assignment has been executed by any of the original named inventors, the written consent of the assignee(s).[1]

Applicants provided a statement, signed by David J. Bull, stating that "any error in inventorship in the international application, PCT/AU2003/00827, filed on June 27, 2003, occurred without deceptive intention on my part." This statement satisfies item (1) of 37 CFR 1.497(d).

The processing fee of $130.00 has been paid, satisfying Item (2) above.

With regard to Item (3), the written consent of the assignee, Cochlear Limited, consenting to the addition of David J. Bull as an inventor in this application was submitted. Item (3) above is satisfied.

Accordingly, applicant has met all of the requirements to add David J. Bull as co-inventor in the above-identified international application.

CONCLUSION

For the reasons discussed above, the submission under 37 CFR 1.497(d) to add David J. Bull as an inventor is hereby **GRANTED**.

The application will be forwarded to the United States Designated/Elected Office for further processing. The 35 U.S.C. 371(c)(1), (2) and (4) date is **08 May 2006.**

Cynthia M. Kratz
Attorney Advisor
PCT Legal Office

Telephone: (571)272-3286
Facsimile: (571)273-0459

---

[1]37 CFR 1.497(d) states, in part: If the oath or declaration filed pursuant to 35 U.S.C. 371(c)(4) and this section names an inventive entity different from the inventive entity set forth in the international application, the oath or declaration must be accompanied by:

> (1) A statement from each person being added as an inventor . . . that any error in inventorship in the international application occurred without deceptive intention on his or her part;
>
> (2) The processing fee set forth in § 1.17(I); and
>
> (3) If an assignment has been executed by any of the original named inventors, the written consent of the assignees.

26 SEP 2005

UNITED STATES PATENT AND TRADEMARK OFFICE

Commissioner for Patents
United States Patent and Trademark Office
P.O. Box 1450
Alexandria, VA 22313-1450
www.uspto.gov

Michael J. Bujold
Davis & Bujold, P.L.L.C.
Fourth Floor
500 North Commercial Street
Manchester, NH 03101-1151

In re Application of	:	
HORIBA et al.	:	
Application No.: 10/518,822	:	
PCT No.: PCT/JP03/07899	:	DECISION
Int. Filing Date: 20 June 2003	:	
Priority Date: 21 June 2002	:	
Attorney Docket No.: ADACHIP265US	:	
For: CATHETER	:	

This decision is in response to applicants' "Request for Corrected Filing Date" filed in the United States Patent and Trademark Office (USPTO) on 11 July 2005, which is being treated as a Petition under 37 CFR 1.181. No petition fee is due.

BACKGROUND

On 20 December 2004, applicant timely filed a request to enter into the national stage under 35 U.S.C. 371 along with, among other things, the appropriate basic national filing fee, a translation of the international application, and a preliminary amendment.

On 31 May 2005, the United Stated Designated/Elected Office mailed a Notification of Missing Requirements under 35 U.S.C. 371 (Form PCT/DO/EO/905) indicating that an oath or declaration in compliance with 37 CFR 1.497 must be filed. The notification set a two-month time limit in which to respond.

On 09 June 2005, applicants filed a "Response to Notification of Missing Parts of Application - Filing Date Granted" which was accompanied by: a copy of the declaration and a postcard receipt dated 13 January 2005.

On 28 June 2005, a Notification of Acceptance was issued identifying the 35 U.S.C. 371(c) date as 15 October 2003. Subsequently, an Official Filing Receipt was issued indicating a "FILING DATE" of 09 June 2005.

On 11 July 2005, applicants filed a "Request for Corrected Filing Date."

DISCUSSION

The actual filing date of the present application is considered to be the international filing date, 20 June 2003. The date in the filing date portion on the filing receipt of a national stage application is the date upon which the requirements set forth in 35 U.S.C. 371(c) for entry into the national stage were completed. (See MPEP §1895.01) Applicants state in their present request that a declaration and power of attorney was received at the United States Patent and Trademark Office on 13 January 2005. A review of the present application reveals that the declaration and power of attorney filed 13 January 2005 is not located therein. Section 503 of the Manual of Section 503 of the Manual of Patent Examining Procedure under the heading "RETURN POSTCARD" states, in part:

> "A postcard receipt which itemizes and properly identifies the papers which are being filed serves as prima facie evidence of receipt in the PTO of all the items listed thereon on the date stamped thereon by the PTO."

The accompanying copy of the post card receipt identifies the application by applicant, application number, and docket number. The receipt itemizes a declaration and a check in the amount of $65. The receipt is stamped "Rec'd PCT/PTO 13 January 2005" across its face and is sufficient to indicate that the combined declaration and power of attorney was in fact received in the Office on 13 January 2005. Thus, the application met the requirements of 35 U.S.C. 371(c) and thus entered the national stage in the United States on 13 January 2005. Therefore, applicants' request to correct the Filing Receipt and Notice of Acceptance is granted.

CONCLUSION

Applicants' request under 37 CFR 1.181 for issuance of a corrected Notification of Acceptance and Official Filing Receipt is **GRANTED**.

The Notification of Acceptance of Application Under 35 U.S.C. 371 and 37 CFR 1.494 or 1.495 (Form PCT/DO/EO/903) mailed on 28 June 2005 is hereby **VACATED**.

The application has an international filing date of 20 June 2003 under 35 U.S.C. 363 and a date of **13 January 2005** under 35 U.S.C. 371(c).

This application is being returned to the United States Designated/Elected Office (DO/EO/US) for treatment in accordance with this decision, that is, for mailing of a NOTIFICATION OF ACCEPTANCE OF APPLICATION (Form PCT/DO/EO/903) which identifies a date of **13 January 2005** under 35 U.S.C. 371(c) and preparation and mailing of a corrected Filing Receipt in accordance with this decision, that is a filing receipt that identifies a filing date of **13 January 2005**.

Thereafter, this application will be referred to its appropriate Art Unit.

Anthony Smith
Anthony Smith
Attorney-Advisor
Office of PCT Legal Administration
Telephone: 571-272-3298
Fax: 571-273-0459

UNITED STATES PATENT AND TRADEMARK OFFICE

Commissioner for Patents
United States Patent and Trademark Office
P.O. Box 1450
Alexandria, VA 22313-1450
www.uspto.gov

DAVIS & BUJOLD, P.L.L.C.
112 PLEASANT STREET
CONCORD NH 03301

COPY MAILED
DEC 16 2008

In re Application of :
Horiba, et al. : DECISION ON PETITION
Application No. 10/518,822 :
Filed: January 13, 2005 :
Atty. Dkt. No.: ADACHI P265US :

The above-identified application has been forwarded to the Office of Petitions for consideration of the petition to withdraw the holding of abandonment under 37 CFR 1.181 filed October 27, 2008.

The petition under 37 CFR 1.181 to withdraw the holding of abandonment is hereby GRANTED.

The application was held abandoned for failure to timely submit a proper reply to the non-final Office action mailed March 18, 2008. The non-final Office action set a three month shortened statutory period of time for reply. Notice of Abandonment was mailed October 23, 2008.

Petitioners assert that a response to the non-final Office was timely submitted via facsimile on June 17, 2008. Petitioners have provided as proof of submission and proof of receipt of the response, a copy of the response purportedly submitted. The copy of the response bears a certificate of transmission date of June 17, 2008, in accordance with 37 CFR 1.8. Further, petitioners have provided a copy of a USPTO Auto-Reply Facsimile Transmission acknowledging receipt of the response on June 17, 2008.

The original response submitted June 17, 2008 has not been located in the application file. However, in view of the evidence presented, the petition to withdraw the holding of abandonment is hereby GRANTED.

The Notice of Abandonment is hereby VACATED and the holding of abandonment is WITHDRAWN.

This application is being forwarded to the Technology Center 3767 for further processing.

Telephone inquiries concerning this matter may be directed to the undersigned at (571) 272-3205.

Alesia M. Brown
Petitions Attorney
Office of Petitions

23 SEP 2005

UNITED STATES PATENT AND TRADEMARK OFFICE

Commissioner for Patents
United States Patent and Trademark Office
P.O. Box 1450
Alexandria, VA 22313-1450
www.uspto.gov

PHIL KONGTCHEU
PFK TECHNOLOGIES
1866 JOHN F. KENNEDY BOULEVARD SUITE B1
JERSEY CITY NJ 07305

In re Application of KONGTCHEU Application No.: 10/518,823 PCT No.: PCT/US03/19179 Int. Filing: 18 June 2003 Priority Date: 18 June 2002 Attorney Docket No.: None For: METHODS, SYSTEMS AND COMPUTER PROGRAM PRODUCTS TO FACILITATE THE FORMATION AND TRADING OF DERIVATIVES CONTRACTS	DECISION ON PETITION UNDER 37 CFR 1.137(b)

This is responsive to the petition to revive under 37 CFR 1.137(b) filed 07 September and refiled on 14 September 2005 in the above-captioned application. The petition is hereby **GRANTED** as follows:

Applicant's statement that the "entire delay in filing the required reply from the due date for the required reply until the filing of a grantable petition under 37 CFR 1.137(b) was unintentional" meets the requirements of 37 CFR 1.137(b)(3).

A review of the application file reveals that the basic national fee of $150 has been provided. The required petition fee of $750 was also paid. Thus, the requirements of 37 CFR 1.137(b) have been satisfied. Therefore, the request to revive the application abandoned under 35 U.S.C. 371(d) is granted as to the National stage in the United States of America.

This application is being forwarded to the United States Designated/Elected Office for further processing. The 35 U.S.C. 371 (c)(1), (c)(2) and (c)(4) date is 14 September 2005.

Cynthia M. Kratz
Attorney Advisor
Office of PCT Legal Administration

Telephone: 571-272-3286
Facsimile: 571-273-0459

UNITED STATES PATENT AND TRADEMARK OFFICE

Commissioner for Patents
United States Patent and Trademark Office
P.O. Box 1450
Alexandria, VA 22313-1450
www.uspto.gov

APEX JURIS, PLLC
12733 LAKE CITY WAY NORTHEAST
SEATTLE WA 98125

MAILED

FEB 19 2009

OFFICE OF PETITIONS

In re Application of :
Kenichiro KOSAI et al. :
Application No. 10/518,861 :
Filed: March 21, 2005 :
Attorney Docket No. 042-307 :

ON PETITION

This is a decision on the petition under 37 CFR 1.137(b), filed November 27, 2008, to revive the above-identified application.

The petition is **GRANTED**.

The above-identified application became abandoned for failure to reply within the meaning of 37 CFR 1.113 in a timely manner to the final Office action mailed February 22, 2008, which set a shortened statutory period for reply of three (3) months. No extension of time under the provisions of 37 CFR 1.136(a) was obtained. Accordingly, the above-identified application became abandoned on May 23, 2008.

The petition satisfies the conditions for revival pursuant to the provisions of 37 CFR 1.137(b) in that (1) the reply in the form of an amendment, a Request for Continued Examination, and the $405 filing fee; (2) the petition fee of $810; and (3) the required statement of unintentional delay have been received. Accordingly, the reply to the final Office Action of February 22, 2008 is accepted as having been unintentionally delayed.

Telephone inquiries concerning this decision should be directed to Felix O. Figueroa at (571) 272-6052 or in his absence, the undersigned at (571) 272-7099.

The application file is being referred to Technology Center AU 1633 for appropriate action on the concurrently filed Request for Continued Examination and amendment.

David A. Bucci
Petitions Examiner
Office of Petitions

UNITED STATES PATENT AND TRADEMARK OFFICE

UNITED STATES DEPARTMENT OF COMMERCE
United States Patent and Trademark Office
Address: COMMISSIONER FOR PATENTS
P.O. Box 1450
Alexandria, Virginia 22313-1450
www.uspto.gov

BASF Performance Products LLC
Patent Department
540 White Plains Road
P.O. Box 2005
Tarrytown, NY 10591

Mail Date: 04/20/2010

Applicant	: Jochen Fink	: DECISION ON REQUEST FOR
Patent Number	: 7632891	: RECALCULATION of PATENT
Issue Date	: 12/15/2009	: TERM ADJUSTMENT IN VIEW
Appliction No	: 10/518,873	: OF WYETH AND NOTICE OF INTENT TO
Filed	: 12/20/2004	: ISSUE CERTIFICATE OF CORRECTION
		:

The Request for Recalculation is **GRANTED** to the extent indicated.

The patent term adjustment has been determined to be **751** days. The USPTO will *sua sponte* issue a certificate of correction reflecting the amount of PTA days determined by the recalculation.

Prior to the issuance of the certificate of correction, the USPTO will afford patentee an opportunity to be heard and request reconsideration. Accordingly, patentee has **one month or thirty (30) days**, whichever is longer, to file a request for reconsideration of this patent term adjustment calculation. See 35 U.S.C. 154(b)(3)(B)(ii) and 37 CFR 1.322(a)(4). No extensions of time will be granted under 37 CFR 1.136.

Patentee should use document code PET.OP if electronically filing a request for reconsideration of this patent term adjustment calculation. The patentee must also include the information required by 37 CFR 1.705(b)(2) and the fee required by 37 CFR 1.18(e). If patentee does not file a timely request for reconsideration of this patent term adjustment calculation including the information required by 37 CFR 1.705(b)(2) and the fee required by 37 CFR 1.18(e), the USPTO will issue a certificate of correction reflecting the PTA determination noted above.

Patentee should be aware that in order to preserve the right to review in the United States District Court for the District of Columbia of the USPTO patent term adjustment determination, patentee must ensure that he or she also take the steps required under 35 U.S.C. 154(b)(4)(A) in a timely manner. Nothing in the request for recalculation should be construed as providing an alternative time frame for commencing a civil action under 35 U.S.C. 154(b)(4)(A).

Any questions concerning this decision should be directed to the Office of Patent Legal Administration at 571-272-7702.

UNITED STATES PATENT AND TRADEMARK OFFICE

Commissioner for Patents
United States Patent and Trademark Office
P.O. Box 1450
Alexandria, VA 22313-1450
www.uspto.gov

05 JAN 2007

Basell USA Inc.
Intellectual Property
912 Appleton Road
Elkton, Maryland 21921

In re Application of
PELLICONI et al.
Application No.: 10/518,882
PCT No.: PCT/EP03/06097
Int. Filing Date: 11 June 2003
Priority Date: 26 June 2002
Atty. Docket No.: MI 6029 (US)
For: IMPACT-RESISTANT POLYOLEFIN COMPOSITIONS

DECISION

This decision is issued in response to applicant's "Request to Correct Official Filing Receipt" dated 31 October 2005 and applicant's "Petition under 37 CFR 1.53 to Correct Official Filing Receipt" dated 15 November 2006. No petition fee is due.

BACKGROUND

On 11 June 2003, applicant filed international application PCT/EP03/06097 which claimed a priority date of 26 June 2002. A copy of the international application was communicated to the United States Patent and Trademark Office from the International Bureau on 08 January 2004. Pursuant to 37 CFR 1.495, the deadline for payment of the basic national fee in the United States was to expire 30 months from the priority date, 26 December 2004.

On 20 December 2004, applicant filed a Transmittal Letter (PTO-1390) requesting entry into the national stage in the United States of America under 35 U.S.C. 371. Filed with the Transmittal Letter were, *among others*, the requisite basic national fee; a copy of the international application; and a declaration (in compliance with 37 CFR 1.497) previously submitted in the international application under PCT Rule 4.17(iv).

On 06 June 2005, the United Stated Designated/Elected Office mailed a Notification of Missing Requirements under 35 U.S.C. 371 (Form PCT/DO/EO/905) indicating that an oath or declaration in compliance with 37 CFR 1.497(a) and (b) must be filed. The notification set a two-month time limit in which to respond.

On 08 June 2005, applicant filed "Letter Regarding Missing Requirements under 35 U.S.C. 371" which included a copy of the PCT Request executed by the applicant/inventors.

On 23 August 2005, the United States Designated/Elected Office (DO/EO/US) mailed a "Notification of Acceptance of Application under 35 U.S.C. 371 AND 37 CFR 1.495" (Form PCT/DO/EO/903) which set forth the date of receipt 35 U.S.C. 371(c)(1), (c)(2), and (c)(4) requirements as 08 June 2005 and a 35 U.S.C. 371 completion date of 08 June 2005.

On 31 October 2005, applicant filed "Request to Correct Official Filing Receipt."

On 15 November 2006, applicant filed "Petition under 37 CFR 1.53 to Correct Official Filing Receipt."

DISCUSSION

Applicant requests a corrected filing date (or 371(c) date) from 08 June 2005 to 20 December 2004. The actual filing date of the present application is the international filing date, i.e., 11 June 2003. (See 35 U.S.C. 363) The date in the filing date portion on the filing receipt of a national stage application is the date upon which the requirements set forth in 35 U.S.C. 371(c) for entry into the national stage were completed. (See MPEP §1895.01) A review of the application file reveals that the basic national fee, a copy of the international application, and a declaration were filed with the USPTO on 20 December 2004, the date which the requirements set forth in 35 U.S.C. 371(c) for entry into the national stage was completed. Therefore, the correction of the "FILING DATE" on the filing receipt to indicate a date of 20 December 2004 is proper since applicants completed the requirements set forth in 35 U.S.C. 371(c) on 20 December 2004. (See MPEP section 1893.03(b)).

CONCLUSION

Applicant's request for a corrected filing receipt is **GRANTED**.

The Notification of Acceptance of Application Under 35 U.S.C. 371 and 37 CFR 1.494 or 1.495 (Form PCT/DO/EO/903) mailed on 23 August 2005 is hereby **VACATED**.

The application has an international filing date of 11 June 2003 under 35 U.S.C. 363 and a date of **20 December 2004** under 35 U.S.C. 371(c). This application is being returned to the United States Designated/Elected Office for processing in accordance with this decision.

Anthony Smith
Attorney-Advisor
Office of PCT Legal Administration
Telephone: 571-272-3298
Fax: 571-273-0459

UNITED STATES PATENT AND TRADEMARK OFFICE

Commissioner for Patents
United States Patent and Trademark Office
P.O. Box 1450
Alexandria, VA 22313-1450
www.uspto.gov

WOODCOCK WASHBURN LLP
CIRA CENTRE, 12TH FLOOR
2929 ARCH STREET
PHILADELPHIA PA 19104-2891

MAILED

APR 22 2010

OFFICE OF PETITIONS

In re Application of	:	
Michel Joseph Maurice Guillaume, et al.	:	
Application No. 10/518,887	:	DECISION GRANTING PETITION
Filed: December 21, 2004	:	UNDER 37 CFR 1.313(c)(2)
Attorney Docket No. **JANS-0073 / JAB1714US**	:	

This is a decision on the petition under 37 CFR 1.313(c)(2), filed, April 21, 2010 to withdraw the above-identified application from issue after payment of the issue fee.

The petition is **GRANTED**.

The above-identified application is withdrawn from issue for consideration of a submission under 37 CFR 1.114 (request for continued examination). *See* 37 CFR 1.313(c)(2).

Petitioner is advised that the issue fee paid on November 16, 2007 cannot be refunded. If, however, this application is again allowed, petitioner may request that it be applied towards the issue fee required by the new Notice of Allowance.[1]

Telephone inquiries should be directed to Terri Johnson at (571) 272-2991.

This application is being referred to Technology Center AU 1624 for processing of the request for continued examination under 37 CFR 1.114 and for consideration of the concurrently filed information disclosure statement.

Terri Johnson
Petitions Examiner
Office of Petitions

---

[1] *The request to apply the issue fee to the new Notice may be satisfied by completing and returning the new Part B – Fee(s) Transmittal Form (along with any balance due at the time of submission). Petitioner is advised that the Issue Fee Transmittal Form* ***must*** *be completed and timely submitted to avoid abandonment of the application.*

UNITED STATES PATENT AND TRADEMARK OFFICE

UNITED STATES DEPARTMENT OF COMMERCE
United States Patent and Trademark Office
Address: COMMISSIONER FOR PATENTS
P.O. Box 1450
Alexandria, Virginia 22313-1450
www.uspto.gov

WESTMAN CHAMPLIN & KELLY, P.A.
SUITE 1400
900 SECOND AVENUE SOUTH
MINNEAPOLIS, MN 55402

Mail Date: 04/21/2010

Applicant	: Anders Jirskog	: DECISION ON REQUEST FOR
Patent Number	: 7589664	: RECALCULATION of PATENT
Issue Date	: 09/15/2009	: TERM ADJUSTMENT IN VIEW
Appliction No	: 10/518,889	: OF WYETH AND NOTICE OF INTENT TO
Filed	: 09/06/2005	: ISSUE CERTIFICATE OF CORRECTION
		:

The Request for Recalculation is **GRANTED** to the extent indicated.

The patent term adjustment has been determined to be **241** days. The USPTO will *sua sponte* issue a certificate of correction reflecting the amount of PTA days determined by the recalculation.

Prior to the issuance of the certificate of correction, the USPTO will afford patentee an opportunity to be heard and request reconsideration. Accordingly, patentee has **one month or thirty (30) days**, whichever is longer, to file a request for reconsideration of this patent term adjustment calculation. See 35 U.S.C. 154(b)(3)(B)(ii) and 37 CFR 1.322(a)(4). No extensions of time will be granted under 37 CFR 1.136.

Patentee should use document code PET.OP if electronically filing a request for reconsideration of this patent term adjustment calculation. The patentee must also include the information required by 37 CFR 1.705(b)(2) and the fee required by 37 CFR 1.18(e). If patentee does not file a timely request for reconsideration of this patent term adjustment calculation including the information required by 37 CFR 1.705(b)(2) and the fee required by 37 CFR 1.18(e), the USPTO will issue a certificate of correction reflecting the PTA determination noted above.

Patentee should be aware that in order to preserve the right to review in the United States District Court for the District of Columbia of the USPTO patent term adjustment determination, patentee must ensure that he or she also take the steps required under 35 U.S.C. 154(b)(4)(A) in a timely manner. Nothing in the request for recalculation should be construed as providing an alternative time frame for commencing a civil action under 35 U.S.C. 154(b)(4)(A).

Any questions concerning this decision should be directed to the Office of Patent Legal Administration at 571-272-7702.

#5

UNITED STATES PATENT AND TRADEMARK OFFICE

06 DEC 2005

COMMISSIONER FOR PATENTS
UNITED STATES PATENT AND TRADEMARK OFFICE
P.O. BOX 1450
ALEXANDRIA, VA 22313-1450
www.uspto.gov

OLIFF & BERRIDGE, PLC
P.O. BOX 19928
ALEXANDRIA, VA 22320

In re Application of McMURTRY et al	:	
U.S. Application No.: 10/518,918	:	
PCT Application No.: PCT/GB03/02915	:	DECISION
Int. Filing Date: 07 July 2003	:	
Priority Date Claimed: 05 July 2002	:	
Attorney Docket No.: 122070	:	
For: LASER CALIBRATION APPARATUS	:	

This is in response to applicant's "Response to Notification of Missing Requirements Under 35 U.S.C. 371 in the United States Designated/Elected Office (DO/EO/US) Declaration Already Filed" submitted 24 August 2005, which is being treated as a petition under 37 CFR 1.181.

BACKGROUND

On 07 July 2003, applicant filed international application PCT/GB03/02915, which claimed priority of an earlier United Kingdom application filed 05 July 2002. A copy of the international application was communicated to the USPTO from the International Bureau on 15 January 2004. The thirty-month period for paying the basic national fee in the United States expired on 05 January 2005.

On 23 December 2004, applicant filed national stage papers in the United States Designated/Elected Office (DO/EO/US). The submission was accompanied by, *inter alia*, the basic national fee required by 35 U.S.C. 371(c)(1) and a purported declaration.

On 04 August 2005, the DO/EO/US mailed a Notification of Missing Requirements Under 35 U.S.C. 371 (Form PCT/DO/EO/905), which indicated that an oath or declaration in compliance with 37 CFR 1.497 must be filed.

On 24 August 2005, applicant filed the present petition under 37 CFR 1.181, requesting acceptance of the declaration submitted on 23 December 2004.

DISCUSSION

The present response states that a declaration was submitted on 23 December 2004. A review of the application file reveals that a copy of a PCT Rule 4.17(iv) declaration filed in international application PCT/GB03/02915 is present. The International Bureau has informed the USPTO that a properly executed declaration filed under PCT Rule 4.17(iv) was submitted later than the international filing date. The PCT Rule 4.17(iv) declaration did not properly identify the international application to which it was directed, and thus the declaration which was filed in international application PCT/GB03/02915 cannot be applied to the present national stage application.

Furthermore, the declaration submitted on 23 December 2004, even if not considered to be a declaration under PCT Rule 4.17(iv) but rather an original submission under 37 CFR 1.497, does not satisfy the requirements of 37 CFR 1.497(a)(2).

MPEP 602 (VI) states in relevant part,

> The following combinations of information supplied in an oath or declaration filed after the filing date of the application are acceptable as minimums for identifying a specification and compliance with any one of the items below will be accepted as complying with the identification requirement of 37 CFR 1.63:
>
> > (A) application number (consisting of the series code and the serial number, e.g., 08/123,456);
> > (B) serial number and filing date;
> > (C) attorney docket number which was on the specification as filed;
> > (D) title of the invention which was on the specification as filed and reference to an attached specification which is both attached to the oath or declaration at the time of execution and submitted with the oath or declaration; or
> > (E) title of the invention which was on the specification as filed and accompanied by a cover letter accurately identifying the application for which it was intended by either the application number (consisting of the series code and the serial number, e.g., 08/123,456), or serial number and filing date. Absent any statement(s) to the contrary, it will be presumed that the application filed in the USPTO is the application which the inventor(s) executed by signing the oath or declaration. (Emphasis added.)

The declaration submitted on 23 December 2004 does not include any of the above combinations of information. A proper response to the Notification of Missing Requirements mailed 04 August 2005 remains due.

CONCLUSION

For the reasons above, the petition under 37 CFR 1.181 is DISMISSED without prejudice.

If reconsideration on the merits of this decision is desired, a proper response must be filed within TWO (2) MONTHS from the mail date of this decision. Any reconsideration request should include a cover letter entitled "Renewed Petition Under 37 CFR 1.181".

Please direct further correspondence with respect to this matter to Mail Stop PCT, Commissioner for Patents, Office of PCT Legal Administration, P.O. Box 1450, Alexandria, Virginia 22313-1450, with the contents of the letter marked to the attention of the Office of PCT Legal Administration.

Bryan Tung
PCT Legal Examiner
Office of PCT Legal Administration

Telephone: 571-272-3303
Facsimile: 571-273-0459

UNITED STATES PATENT AND TRADEMARK OFFICE

COMMISSIONER FOR PATENTS
UNITED STATES PATENT AND TRADEMARK OFFICE
P.O. BOX 1450
ALEXANDRIA, VA 22313-1450
www.uspto.gov

07 MAR 2007

OLIFF & BERRIDGE, PLC
P.O. BOX 19928
ALEXANDRIA, VA 22320

In re Application of McMURTRY et al	:	
U.S. Application No.: 10/518,918	:	
PCT Application No.: PCT/GB03/02915	:	DECISION
Int. Filing Date: 07 July 2003	:	
Priority Date Claimed: 05 July 2002	:	
Attorney Docket No.: 122070	:	
For: LASER CALIBRATION APPARATUS	:	

This is in response to applicant's requests for a corrected Notification of Acceptance of Application, filed 29 June 2006 and 05 October 2006, which are being treated collectively as a petition under 37 CFR 1.181. No petition fee is due.

BACKGROUND

On 07 July 2003, applicant filed international application PCT/GB03/02915, which claimed priority of an earlier United Kingdom application filed 05 July 2002. A copy of the international application was communicated to the USPTO from the International Bureau on 15 January 2004. The thirty-month period for paying the basic national fee in the United States expired on 05 January 2005.

On 23 December 2004, applicant filed national stage papers in the United States Designated/Elected Office (DO/EO/US). The submission was accompanied by, *inter alia*, the basic national fee required by 35 U.S.C. 371(c)(1) and a purported declaration.

On 04 August 2005, the DO/EO/US mailed a Notification of Missing Requirements Under 35 U.S.C. 371 (Form PCT/DO/EO/905), which indicated that an oath or declaration in compliance with 37 CFR 1.497 must be filed.

On 29 December 2005, applicant purportedly filed an executed declaration.

On 06 June 2006, the DO/EO/US mailed a Notice of Acceptance of Application Under 35 U.S.C. 371 (Form PCT/DO/EO/903), which indicated 01 March 2006 as the date of receipt of the 35 U.S.C. 371(c)(1), (c)(2), and (c)(4) requirements.

On 29 June 2006 and 05 October 2006, applicant filed the present petition under 37 CFR 1.181.

DISCUSSION

The evidence of record is sufficient to establish that the declaration was originally filed on 29 December 2005. Specifically, the copy of the return receipt, which includes the declaration in its itemized contents and which bears a USPTO date stamp of 29 December 2005, serves as *prima facie* evidence that the declaration was received by the USPTO on 29 December 2005.

CONCLUSION

For the reasons above, the petition under 37 CFR 1.181 is GRANTED.

The Notice of Acceptance of Application Under 35 U.S.C. 371 (Form PCT/DO/EO/903) mailed 06 June 2006 is hereby VACATED.

The application has an International Filing Date under 35 U.S.C. 363 of 07 July 2003, and a date under 35 U.S.C. 371(c)(1), (c)(2) and (c)(4) of 29 December 2005.

This application is being forwarded to the United States Designated/Elected Office (DO/EO/US) for further processing in accordance with this decision, including preparation and mailing of a corrected filing receipt and a new Notice of Acceptance of Application Under 35 U.S.C. 371 (Form PCT/DO/EO/903), which should indicate 29 December 2005 as the date of receipt of the 35 U.S.C. 371(c)(1), (c)(2), and (c)(4) requirements.

Bryan Lin

Bryan Lin
PCT Legal Examiner
Office of PCT Legal Administration

Telephone: 571-272-3303
Facsimile: 571-273-0459

16 MAR 2006

UNITED STATES PATENT AND TRADEMARK OFFICE

COMMISSIONER FOR PATENTS
UNITED STATES PATENT AND TRADEMARK OFFICE
P.O. BOX 1450
ALEXANDRIA, VA 22313-1450
www.uspto.gov

Stephen G. Kalinchak
Lundbeck Research USA, Inc.
215 College Road
Paramus, New Jersey 07652

In re Application of	:	
MARZABADI et al	:	
Application No.: 10/518,939	:	
PCT No.: PCT/US03/21348	:	
Int. Filing Date: 03 July 2003	:	DECISION
Priority Date: 03 July 2002	:	
Atty. Docket No.: 67440-A-PCT-US	:	
For: SPIROCYCLIC PIPERDINES AS	:	
MCH1 ANTAGONISTS AND...	:	

This is a decision in response to the "COMMUNICATION IN RESPONSE TO NOTIFICATION OF MISSING REQUIREMENTS UNDER 35 U.S.C. §371 IN THE UNITED STATES DESIGNATED/ELECTED OFFICE (DO/EO/US)" filed 08 July 2005.

BACKGROUND

On 03 July 2003, applicant filed international application PCT/US03/21348 that claimed priority of an earlier United States application filed 03 July 2002. Accordingly, the thirty-month period for paying the basic national fee for the national stage in the United States expired at midnight on 03 January 2005.

On 17 December 2004, applicant filed a letter for entry into the national stage in the United States which was accompanied by, *inter alia*, a declaration of the inventors and the basic national fee of $300 as required by 35 U.S.C. 371(c).

On 20 May 2005, the United States Patent and Trademark Office in its capacity as an Elected Office mailed a NOTIFICATION OF MISSING REQUIREMENTS UNDER 35 U.S.C. 371 (Form PCT/DO/EO/905) indicating that the declaration was defective and that applicant was required to file a new oath/declaration and a surcharge fee. The notification indicated that the second named inventor's name, Yu Jiang, does not correspond to the name set forth on the International Application and that the declaration names an additional inventor, Kim Anderson, not named in the International Application.

On 08 July 2005, applicants filed the present response which was accompanied by, *inter alia*, a declaration by Yu Jiang explaining the difference in names, and a copy of a NOTIFICATION OF THE RECORDING OF A CHANGE (Form PCT/IB/306) indicating that inventor Kim Anderson was added under PCT Rule *92bis* to the international application.

DISCUSSION

37 CFR 1.42(a)(4) states, in part:

> The inventorship of an international application entering the national stage under 35 U.S.C. 371 is that inventorship set forth in the international application, which includes any change effected under PCT Rule 92*bis*.

With respect to inventor Anderson, applicants have submitted evidence, in the form of the Form PCT/IB/306, that she was added under PCT Rule 92*bis*. As such, the declaration is acceptable with respect to inventor Anderson.

With respect to inventor Jiang, applicants have asserted, through inventor Jiang's declaration, that the inventor's legal name is Yu Jiang, that he also goes by the name Allen Jiang, and that his "legal name was incorrectly identified on the unsigned PCT Request Form as 'Allen' Jiang." Inventor Jiang goes on to indicate that on a later submitted copy of the Request his name was properly indicated as Yu Jiang. However, applicants have not submitted a showing that his name was ever officially corrected under PCT Rule 92*bis*.

In this regard, MPEP § 605.04 states, in part:

> Except for correction of a typographical or transliteration error in the spelling of an inventor's name, a request to have the name changed from the typewritten version to the signed version or any other corrections in the name of the inventor(s) will not be entertained, unless accompanied by a petition under 37 CFR 1.182 together with an appropriate petition fee.

In that the changing of his name from "Allen" to "Yu" is more than just a typographical or transliteration error, the present request is properly treated as a petition under 37 CFR 1.182. In view of the explanation given by inventor Jiang in his declaration, on petition the acceptance of the declaration with the name Yu Jiang is deemed proper. The requisite petition fee of $400 has been charged to counsel's Deposit Account No. **50-3201** as authorized in the present communication

CONCLUSION

For the reasons above, the petition is **GRANTED**, and the declaration filed 17 December 2004, is **ACCEPTED** for the purposes of 35 U.S.C. 371.

The application has an international filing date of 03 July 2003, under 35 U.S.C. 363, and a 35 U.S.C. 371(c) date of **17 December 2004**.

This application is being forwarded to the National Stage Processing Branch of the International Division for further processing in accordance with this decision.

Richard R. Cole
PCT Legal Examiner
Office of PCT Legal Administration

(571) 272-3281
Fax: (571) 273-0459

UNITED STATES PATENT AND TRADEMARK OFFICE

Commissioner for Patents
United States Patent and Trademark Office
P.O. Box 1450
Alexandria, VA 22313-1450
www.uspto.gov

MORRISON & FOERSTER LLP
12531 HIGH BLUFF DRIVE, SUITE 100
SAN DIEGO CA 92130-2040

COPY MAILED

FEB 13 2007

OFFICE OF PETITIONS

In re Application of	:	
STREEKSTRA, et al.	:	
Application No. 10/518,949	:	DECISION ON PETITION
Filed: December 17, 2004	:	TO WITHDRAW
Attorney Docket No. 246152024700	:	FROM RECORD
	:	

This is a decision on the Request to Withdraw as attorney or agent of record under 37 C.F.R. § 1.36(b), filed August 30, 2006.

The request is **NOT APPROVED** as moot.

A review of the file record indicates that the power of attorney to Thomas E. Ciotti of MORRISON & FOERSTER LLP has been revoked by the assignee of the patent application on October 20, 2006. Accordingly, the request to withdraw under 37 C.F.R. § 1.36(b) is moot.

All future communications from the Office will continue to be directed to the below-listed address until otherwise notified by applicant.

Telephone inquires concerning this decision should be directed to the undersigned at 571-272-7253.

Monica A. Graves
Petitions Examiner
Office of Petitions

cc: **NIXON & VANDERHYE P.C**
901 NORTH GLEBE ROAD, 11TH FLOOR
ARLINGTON, VA 22203

UNITED STATES PATENT AND TRADEMARK OFFICE

Commissioner for Patents
United States Patent and Trademark Office
P.O. Box 1450
Alexandria, VA 22313-1450
www.uspto.gov

NIXON & VANDERHYE, PC
901 NORTH GLEBE ROAD, 11TH FLOOR
ARLINGTON VA 22203

COPY MAILED
AUG 21 2008

In re Application of :
Streekstra et al. :
Application No. 10/518,949 : DECISION ON PETITION
Filed: December 17, 2004 :
Attorney Docket Number: BJS-4662-367 :

This is a decision on the petition, filed June 13, 2008 which is being treated as a petition under 37 CFR 1.181, requesting withdrawal of the holding of abandonment in the above-identified application.

The petition is **GRANTED**.

This application was held abandoned for failure to properly respond to the Office action of November 29, 2007, which set a three (3) month shortened statutory period for reply. Accordingly, a reply was due on or before February 29, 2008. A Notice of Abandonment was mailed on June 3, 2008.

Petitioner states that a timely reply was mailed via electronic filing on May 29, 2008, which included the following papers: an amendment, Notice of Appeal (and fee) and three month extension of time.

Review of the file record shows the originally submitted reply sent on May 29, 2008 has been located.

Accordingly, the holding of abandonment for failure to timely file a proper reply to the Office action of November 29, 2007 is hereby withdrawn and the application restored to pending status.

This application is being referred to Art Unit 1657 for appropriate action in the normal course of business.

Telephone inquiries concerning this matter should be directed to the undersigned at (571) 272-3215.

Charlema R. Grant
Petitions Attorney
Office of Petitions

20 JUL 2005

#4

UNITED STATES PATENT AND TRADEMARK OFFICE

COMMISSIONER FOR PATENTS
UNITED STATES PATENT AND TRADEMARK OFFICE
P.O. BOX 1450
ALEXANDRIA, VA 22313-1450
www.uspto.gov

Cynthia L. Pillote
SNELL & WILMER, L.L.P.
ONE ARIZONA CENTER
400 EAST VAN BUREN
PHOENIX, AZ 85004-2202

In re Application of VILMOS
Application No.: 10/518,951
PCT Application No.: PCT/HU02/00150
Int. Filing Date: 18 December 2002
Priority Date Claimed: 17 June 2002
Attorney Docket No.: 43843-0400
For: SET OF EQUIPMENT FOR THE PREPARATION AND EXECUTION OF THE FINANCIAL PERFORMANCE OF A BUSINESS TRANSACTION BETWEEN A SELLER AND A BUYER

DECISION ON PETITION UNDER 37 CFR 1.137(b)

Applicants' "Petition For Revival Under 37 CFR 1.137(b)," filed in the United States Patent and Trademark Office on 23 June 2005 is **GRANTED**.

BACKGROUND

On 18 December 2002, applicants filed international application PCT/HU02/00150. The international application claims a priority date of 17 June 2002 and designates the United States. The deadline for paying the basic national fee in the United States is thirty months from the priority date, that is 17 December 2004. The application became abandoned at midnight 17 December 2004 for failure to pay the national basic fee.

On 17 December 2004, applicant filed a transmittal letter for entry into the US national stage under 35 U.S.C. 371, which was accompanied by, *inter alia*, a copy of the International Application as required by 35 U.S.C. 371(c)(2).

On 20 April 2005, a Notification of Abandonment (Form PCT/DO/EO/909) was mailed to applicant, indicating that applicant failed to provide the full U.S. Basic National Fee by the thirty months deadline.

On 23 June 2005, applicant filed the instant petition for revival accompanied by, *inter alia*, the requisite basic national fee as required by 35 U.S.C. 37(c)(1) and the petition fee of $750.

DISCUSSION

A petition to revive an abandoned application under 37 CFR 1.137(b) must be filed without intentional delay from the time the application became abandoned and/or applicant first became aware of the abandoned status of the application. A petition under 37 CFR 1.137(b) must be accompanied by (1) a proper reply, (2) a statement that the entire delay in filing the required reply from the due date for the reply until the filing of a grantable petition was unintentional, (3) the petition fee required by law, and (4) a terminal disclaimer and fee (if the international application was filed prior to June 8, 1995). A payment of the basic national fee constitutes a proper reply for entry into the national stage.

Applicant's statement in the petition that "the entire delay in filing the required reply from the due date for the required reply until the filing of a grantable petition under 37 CFR 1.137(b) was unintentional" satisfies the requirements of 37 CFR 1.137(b)(3). The submission of the national fee and the copy of the international application satisfies 37 CFR 1.137(b)(1). The payment of the petition fee satisfies the requirement under 37 CFR 1.137(b)(2). A terminal disclaimer is not required because the application was filed on or after 08 June 1995. Therefore, the requirements for a grantable petition under 37 CFR 1.137(b) have been satisfied.

CONCLUSION

The petition to revive the application abandoned under 37 CFR 1.137(b) is **GRANTED** as to the National Stage in the United States of America.

A review of the application shows that applicant has not submitted an oath or declaration in compliance with 37 CFR 1.497(a).

The application is being returned to the National Stage Processing Division of the Office of PCT Operations for continued processing including mailing a NOTIFICATION OF MISSING REQUIRMENTS (Form PCT/DO/EO/905) for failing to provide an oath or declaration in

compliance with 37 CFR 1.497(a) and (b), and a surcharge for providing the oath or declaration later than thirty months from the earliest claimed priority date.

Helen Kwok
PCT Legal Administration Detailee
Telephone: 571-272-6095
Facsimile: 571-273-0459

Richard Cole
PCT Legal Examiner
Office of PCT Legal Administration

United States Patent and Trademark Office

Commissioner for Patents
United States Patent and Trademark Office
P.O. Box 1450
Alexandria, VA 22313-1450
www.uspto.gov

Klarquist Sparkman, LLP
121 SW Salmon Street
Suite 1600
Portland, OR 97204

30 MAY 2006

In re Application of
El Haj et al.
Application No. 10/518,956
PCT No.: PCT/GB03/02624
Int. Filing Date: 19 June 2003
Priority Date: 19 June 2002
Atty. Docket No.: 5585-69998-01
For: Method of Magnetically Manipulating A Cell With Magnetizable Particles

DECISION

This is in response to the petition under 37 CFR 1.182 filed on 15 August 2005.

BACKGROUND

This international application was filed on 19 June 2003, designated the United States, and claimed an earliest priority date of 19 June 2002. The International Bureau transmitted a copy of the published international application to the USPTO on 31 December 2003. Accordingly, the 30 month time period for paying the basic national fee in the United States expired at midnight on 19 December 2004. Applicants filed *inter alia* the basic national fee on 17 December 2004.

On 01 August 2005, a Notification of Missing Requirements (Form PCT/DO/EO/905) was mailed to applicants, requiring the submission of an executed oath or declaration of the inventors in compliance with 37 CFR 1.497 (a) and (b).

On 10 August 2005, applicants filed a response, including a declaration. The instant petition was filed on 15 August 2005.

On 12 January 2006, a Notice of Acceptance (Form PCT/DO/EO/903) was mailed to applicants.

DISCUSSION

Counsel requests correction of "the name of co-applicant Jon Paul Dobson because in the international application (No. PCT/GB2003/002624) his first and middle names were reversed, and his surname was misspelled as Dubson instead of Dobson." Inspection of the application file reveals that the inventor's name as it appears in the published international application is "DUBSON, Jon, Paul," whereas the name appearing in the executed declaration filed on 10 August 2005 is "Jon Paul Dobson." As such, the only discrepancy in the name is the spelling of the surname; no discrepancy appears in the ordering of the names. Insofar as this discrepancy represents a mere typographic error, no petition under 37 CFR 1.182 is required to resolve the issue of Mr. Dobson's name. Rather, the spelling as "Dobson" is acceptable on the basis of counsel's assertion that "his surname was misspelled as Dubson instead of Dobson." However,

the declaration is defective because of a discrepancy in the name of the other joint inventor, whose name is listed on the published international application as "EL HAJ, Jennifer, Alicia," whereas the corresponding name appearing in the declaration is "Alicia Jennifer Haj." There are two discrepancies: the deletion of "El" from the surname "El Haj," and the reversal of the order of the names from "Jennifer Alicia" to "Alicia Jennifer." To resolve these discrepancies, counsel is required to either submit a new declaration correctly naming the entire, correct inventive entity, or else file a submission including a statement of typographic error and/or a grantable petition under 37 CFR 1.182 in the event that the discrepancies present represent more than a mere typographic error or phonetic misspelling of applicant's name. *See* MPEP § 605.04(b) and MPEP § 201.03(b).

CONCLUSION

The declaration filed on 10 August 2005 is **NOT ACCEPTED**, without prejudice.

The requirements of 35 U.S.C. 371(c)(4) have not been met in that no oath or declaration in compliance with 37 CFR 1.497(a) and (b) has yet been filed. Accordingly, the Notice of Acceptance (Form PCT/DO/EO/903) mailed on 12 January 2006 is hereby **VACATED**.

If reconsideration on the merits of this matter is desired, a proper response must be filed within **TWO (2) MONTHS** from the mail date of this decision. Extensions of time are available under 37 CFR 1.136(a). Failure to timely reply will result in **ABANDONMENT** of this application.

Please direct any further correspondence with respect to this matter to the Assistant Commissioner for Patents, Mail Stop PCT, P.O. Box 1450, Alexandria, VA 22313-1450, and address the contents of the letter to the attention of the PCT Legal Office.

Richard Cole
PCT Legal Examiner
Office of PCT Legal Administration

George M. Dombroske
PCT Legal Examiner
Office of PCT Legal Administration
Tel: (571) 272-3283
Fax: (571) 273-0459

UNITED STATES PATENT AND TRADEMARK OFFICE

UNITED STATES DEPARTMENT OF COMMERCE
United States Patent and Trademark Office
Address: COMMISSIONER FOR PATENTS
P.O. Box 1450
Alexandria, Virginia 22313-1450
www.uspto.gov

SPECKMAN LAW GROUP PLLC
1201 THIRD AVENUE, SUITE 330
SEATTLE, WA 98101

Mail Date: 04/21/2010

Applicant	: Alicia Jennifer Haj	: DECISION ON REQUEST FOR
Patent Number	: 7625562	: RECALCULATION of PATENT
Issue Date	: 12/01/2009	: TERM ADJUSTMENT IN VIEW
Appliction No	: 10/518,956	: OF WYETH AND NOTICE OF INTENT TO
Filed	: 08/10/2005	: ISSUE CERTIFICATE OF CORRECTION
		:

The Request for Recalculation is **GRANTED** to the extent indicated.

The patent term adjustment has been determined to be **109** days. The USPTO will *sua sponte* issue a certificate of correction reflecting the amount of PTA days determined by the recalculation.

Prior to the issuance of the certificate of correction, the USPTO will afford patentee an opportunity to be heard and request reconsideration. Accordingly, patentee has **one month or thirty (30) days**, whichever is longer, to file a request for reconsideration of this patent term adjustment calculation. See 35 U.S.C. 154(b)(3)(B)(ii) and 37 CFR 1.322(a)(4). No extensions of time will be granted under 37 CFR 1.136.

Patentee should use document code PET.OP if electronically filing a request for reconsideration of this patent term adjustment calculation. The patentee must also include the information required by 37 CFR 1.705(b)(2) and the fee required by 37 CFR 1.18(e). If patentee does not file a timely request for reconsideration of this patent term adjustment calculation including the information required by 37 CFR 1.705(b)(2) and the fee required by 37 CFR 1.18(e), the USPTO will issue a certificate of correction reflecting the PTA determination noted above.

Patentee should be aware that in order to preserve the right to review in the United States District Court for the District of Columbia of the USPTO patent term adjustment determination, patentee must ensure that he or she also take the steps required under 35 U.S.C. 154(b)(4)(A) in a timely manner. Nothing in the request for recalculation should be construed as providing an alternative time frame for commencing a civil action under 35 U.S.C. 154(b)(4)(A).

Any questions concerning this decision should be directed to the Office of Patent Legal Administration at 571-272-7702.

UNITED STATES PATENT AND TRADEMARK OFFICE

UNITED STATES DEPARTMENT OF COMMERCE
United States Patent and Trademark Office
Address: COMMISSIONER FOR PATENTS
P.O. Box 1450
Alexandria, Virginia 22313-1450
www.uspto.gov

SPECKMAN LAW GROUP PLLC
1201 THIRD AVENUE, SUITE 330
SEATTLE, WA 98101

Mail Date: 05/18/2010

Applicant : Alicia Jennifer Haj
Patent Number : 7625562
Issue Date : 12/01/2009
Application No : 10/518,956
Filed : 08/10/2005

: NOTICE CONCERNING IMPROPER
: CALCULATION OF PATENT TERM
: ADJUSTMENT BASED UPON USPTO
: IMPROPERLY MEASURING REDUCTION
: PERIOD UNDER 37 CFR 1.704(c)(10).

The United States Patent and Trademark Office (USPTO) discovered that in processing the recent recalculation decisions mailed in response to patentee's filed Request for Recalculation of Patent Term Adjustment in view of Wyeth, the USPTO improperly measured the reduction period for reductions under 37 CFR 1.704(c)(10). Pursuant to 37 CFR 1.704(c)(10), patentee's reduction begins on the date of filing the amendment under 37 CFR 1.312 ("1.312 amendment") or other related paper and ends on the date that the Office mails a response to the filing of the 1.312 amendment or other paper. It has been discovered that during the recalculation, the calculation failed to the limit the reduction to the mail date of the response to the 1.312 amendment or other paper. Accordingly, patentee's reductions were greater than warranted.

This notice **VACATES** the previous GRANTED request for recalculation and provides patentee with a revised GRANTED recalculation.

The patent term adjustment has been determined to be **176** days. The USPTO will *sua sponte* issue a certificate of correction reflecting the amount of patent term adjustment (PTA) days determined by the recalculation.

Prior to the issuance of the certificate of correction, the USPTO will afford patentee an opportunity to be heard and request reconsideration. Accordingly, patentee has **one month or thirty (30) days** from the mail date of this notice, whichever is longer, to file a request for reconsideration of this PTA calculation. See 35 U.S.C. § 154(b)(3)(B)(ii) and 37 CFR 1.322(a)(4).

Patentee should use document code PET.OP if electronically filing a request for reconsideration of this PTA calculation. The patentee must also include the information required by 37 CFR 1.705(b)(2), and the fee required by 37 CFR 1.18(e). If patentee does not file a timely request for reconsideration of this PTA calculation, including the information required by 37 CFR 1.705(b)(2) and the fee required by 37 CFR 1.18(e), the USPTO will issue a certificate of correction reflecting the PTA determination noted above.

Patentee should be aware that in order to preserve the right of review of the USPTO's PTA determination in the United States District Court for the District of Columbia, patentee must ensure that the steps required under 35 U.S.C. § 154 (b)(4) are taken in a timely manner. Nothing in the request for recalculation should be construed as providing an alternative time frame for commencing a civil action under 35 U.S.C. § 154(b)(4).

#5

UNITED STATES PATENT and TRADEMARK OFFICE

COMMISSIONER FOR PATENTS
UNITED STATES PATENT AND TRADEMARK OFFICE
P.O BOX 1450
ALEXANDRIA, VA 22313-1450
www.uspto.gov

23 FEB 2006

Seed Intellectual Property Law Group PLLC
701 5th Avenue Suite 6300
Seattle, WA 98104-7092

In re Aplication of	:	DECISION ON
Bergman et al	:	
PCT No.: PCT/SE2003/001084	:	
Application No: 10/518,961	:	
Int. Filing Date: 24 June 2003	:	PETITION UNDER
Priority Date: 25 June 2002	:	
Attorney's Docket No.: 341058.581USPC	:	
For: HIGH PRESSURE PRESSING DEVICE	:	
AND METHOD	:	37 CFR 1.47(a)

This is in response to the "PETITION UNDER 37 CFR 1.47(a)" filed on 09 January 2005. The petition fee of $200.00 has been paid by check.

BACKGROUND

On 24 June 2003, petitioner filed international application PCT/SE2003/001084, which claimed priority to an earlier application filed 25 June 2002. A copy of the international application was communicated by the International Bureau to the United States Patent and Trademark Office on 31 December 2003. The thirty-month (30) time period for paying the basic national fee in the United States of America expired at midnight on 25 December 2004.

On 20 December 2004, petitioner filed in the United States Patent & Trademark Office a transmittal letter for entry into the national stage in the U.S. under 35 U.SC. 371, which was accompanied by, inter alia, the U.S. basic national fee. No executed declaration or oath was submitted at such time.

On 08 June 2005, the United States Designated/Elected Office (DO/EO/US) mailed a "NOTIFICATION OF MISSING REQUIREMENTS UNDER 35 U.S.C. 371 IN THE UNITED STATES DESIGNATED/ELECTED OFFICE (DO/EO/US)" (Form PCT/DO/EO/905) which informed applicant, inter alia, that an "Oath or Declaration of the inventors, in compliance with 37 CFR 1.497(a), and (b), identifying the application by the International application number and international filing date." The notice indicated that the items must be submitted within two months from date of mailing or by 32 months from the priority date of the application, in order to avoid abandonment of the national stage application.

On 08 December 2005, petitioner filed the present petition in support of filing an executed declaration on behalf of omitted inventor Carl Bergman accompanied, inter alia, a declaration of Mr. Hjalt, and executed declaration without the signature of Carl Bergman.

DISCUSSION

PETITION UNDER 37 CFR 1.47(a):

A petition under 37 CFR 1.47(a) must be accompanied by (1) the fee under 37 CFR 1.17(h), (2) factual proof that the missing joint inventor refuses to execute the application or cannot be reached after diligent effort, (3) a statement of the last known address of the missing inventor, and (4) an oath or declaration by each 37 CFR 1.47(a) applicant on his or her own behalf and on behalf of the non-signing joint inventor.

Furthermore, section 409.03(d) of the Manual of Patent Examining Procedure (M.P.E.P.) **Proof of Unavailability or Refusal**, the relevant sections states, in part:

> **REFUSAL TO JOIN:**
>
> A refusal by an inventor to sign an oath or declaration when the inventor has not been presented with the application papers does not itself suggest that the inventor is refusing to join the application unless it is clear that the inventor understands exactly what he or she is being asked to sign and refuses to accept the application papers. A copy of the application papers should be sent to the last known address of the nonsigning inventor, or, if the nonsigning inventor is represented by counsel, to the address of the nonsigning inventor's attorney.
>
> Where a refusal of the inventor to sign the application papers is alleged, the circumstances of the presentation of the application papers and of the refusal must be specified in a statement of facts by the person who presented the inventor with the application papers and/or to whom the refusal was made. Statements by a party not present when an oral refusal is made will not be accepted.
>
> Proof that a *bona fide* attempt was made to present a copy of the application papers (specification, including claims, drawings, and oath or declaration) to the nonsigning inventor for signature, but the inventor refused to accept delivery of the papers or expressly stated that the application papers should not be sent, may be sufficient. When there is an express oral refusal, that fact along with the time and place of the refusal must be stated in the statement of facts. When there is an express written refusal, a copy of the document evidencing that refusal must be made part of the statement of facts. The document may be redacted to remove material not related to the inventor's reasons for refusal.
>
> When it is concluded by the **37 CFR 1.47** applicant that a nonsigning inventor's conduct constitutes a refusal, all facts upon which that

conclusion is based should be stated in the statement of facts in support of the petition or directly in the petition. If there is documentary evidence to support facts alleged in the petition or in any statement of facts, such evidence should be submitted. Whenever a nonsigning inventor gives a reason for refusing to sign the application oath or declaration, that reason should be stated in the petition.

Petitioner has satisfied requirements (1) and (3) - (4) of 37 CFR 1.47(a) but not requirement (2).

Regarding requirement (1), petitioner has provided the complete fee of $200.00 under 37 CFR 1.17(g).

Regarding requirement (2), in this case, it has been sufficiently demonstrated that a copy of the application papers were mailed to the non-signing inventor, Mr. Carl Bergmann but it is not clear what papers were received by Bergman and what was indicated in the letters. Although documentary evidence to support this assertion has been provided such as the cover letters, the letters are in a foreign language and no English translation has been provided. Also, the declaration of Mr. Hjalt states that Mr. Bergmann received the papers as confirmed by his telephone conversation with him but no postal receipt showing the mailing has been provided. In addition, although the date is given of the refusal, the approximated time of the conversation has not been provided.

Accordingly, it is unclear what is said in the letters and the circumstance of the refusal has not been clearly elaborate.

Regarding requirement 3, petitioner has provided a statement of the last known address of the missing inventor.

Regarding requirement 4, petitioner has provided an executed declaration signed by Mats Gardin on his behalf and on the behalf of the nonsigning joint inventor Carl Bergman.

Consequently, the current record does not sufficiently establish Bergman's refusal to join in the application because no evidentiary documents have been submitted in English to show that a *bona fide* attempt was made to deliver the complete application to him or a complete description of the oral refusal during the telephone conversation including the approximate time.

CONCLUSION

The petition under 37 CFR 1.47(a) is **DISMISSED** without prejudice.

If reconsideration of the merits of the petition under 37 CFR 1.47(a) is desired, applicant must file a request for reconsideration within **TWO (2) MONTHS** from the mail date of this Decision. Any reconsideration request should include a cover letter entitled "Renewed Petition Under 37 CFR 1.47(a)." Extensions of time are available under 37 CFR 1.136(a). Failure to timely file the proper response will result in ABANDONMENT.

Any further correspondence with respect to this matter should be addressed to the Mail Stop PCT, Commissioner for Patents, Office of PCT Legal Administration, P.O. Box 1450, Alexandria, Virginia 22313-1450, with the contents of the letter marked to the attention of the Office of PCT Legal Administration.

Rafael Bacares
PCT Legal Examiner
PCT Legal Office
Telephone: (571) 272-3276
Facsimile: (571) 273-0459

#7

UNITED STATES PATENT and TRADEMARK OFFICE

17 AUG 2006

COMMISSIONER FOR PATENTS
UNITED STATES PATENT AND TRADEMARK OFFICE
P.O BOX 1450
ALEXANDRIA, VA 22313-1450
www.uspto.gov

Seed Intellectual Property Law Group PLLC
701 5th Avenue Suite 6300
Seattle, WA 98104-7092

In re Aplication of	DECISION ON RENEWED
Bergman et al	
PCT No.: PCT/SE2003/001084	
Application No: 10/518,961	
Int. Filing Date: 24 June 2003	PETITION UNDER
Priority Date: 25 June 2002	
Attorney's Docket No.: 341058.581USPC	
For: HIGH PRESSURE PRESSING DEVICE	
AND METHOD	37 CFR 1.47(a)

This is in response to the " RENEWED PETITION UNDER 37 CFR 1.47(a)" filed on 24 July 2006.

BACKGROUND

In a decision from this Office on 23 February 2006, the petition filed on 09 January 2005 under 37 CFR 1.47(a) was dismissed. The decision stated that requirement (2) under 37 CFR 1.47(a) was not met because the circumstances of Mr. Bergmann's refusal was unclear.

On 24 July 2006, petitioner submitted a "Renewed Petition Under 37 CFR 1.47(a)" requesting reconsideration of the Office's decision of 23 February 2006. Petitioner submits a Declaration executed by Mr. Gunnar Hjalt that sets forth additional factual circumstances surrounding Mr. Bergmann's refusal.

DISCUSSION

PETITION UNDER 37 CFR 1.47(a):

A petition under 37 CFR 1.47(a) must be accompanied by (1) the fee under 37 CFR 1.17(h), (2) factual proof that the missing joint inventor refuses to execute the application or cannot be reached after diligent effort, (3) a statement of the last known address of the missing inventor, and (4) an oath or declaration by each 37 CFR 1.47(a) applicant on his or her own behalf and on behalf of the non-signing joint inventor.

The renewed petition of 24 July 2006 has satisfied the requirements under 37 CFR 1.47(a).

Mr. Hjalt's averments do sufficiently demonstrate that a *bona fide* attempt was made to present a copy of the application papers (specification, including claims, drawings, and oath or declaration) to the non-signing inventor for his signature as stipulated under MPEP 409.03(d). In this instance, Mr. Hjalt states that on March 23, 2005 he sent a copy of the applications papers and June 27, 2005 he sent a Declaration and Assignment to Mr. Bergmann. On 29 June 2005, he spoke with Mr. Bergmann, who acknowledged receipt of the papers. Also, on May 22, 2006 another copy of the application papers with the declaration were sent to Mr. Bergmann, and it was received by him on May 24, 2006 as demonstrated by the postal receipt. In addition, they spoke on May 31, 2006 at 1:54 pm, and Mr. Bergmann continued his position not to sign the Declaration and Assignment.

Consequently, the current record does sufficiently establish that Mr. Bergmann refusal to join in the application because petitioner has shown a *bona fide* attempt was made to deliver the complete application to him and that he orally refused to sign the required when as evidenced by the telephone conversations between Mr. Bergmann and Mr. Hjalt.

Petitioner has now satisfied items (1), (2), (3), and (4) under 37 CFR 1.47(a), thus completing the requirements under 37 CFR 1.47(a).

CONCLUSION

The petition under 37 CFR 1.47(a) is **GRANTED**.

As provided in 37 CFR 1.47(a), a notice of the filing of this application will be forwarded to the non-signing inventor at his last known address of record.

A notice of the filing of the application under 37 CFR 1.47(a) will be published in the Official Gazette.

This application is being returned to the United States Designated/Elected Office (DO/EO/US) for continued processing to accept the application as a 37 CFR 1.47(a) application and to mail a filing receipt. The 35 USC 371(c)(1), (c)(2), and (c)(4) date of this application is **09 January 2006.**

Rafael Bacares
PCT Legal Examiner
PCT Legal Office
Telephone: (571) 272-3276
Facsimile: (571) 273-0459

UNITED STATES PATENT and TRADEMARK OFFICE

COMMISSIONER FOR PATENTS
UNITED STATES PATENT AND TRADEMARK OFFICE
P.O BOX 1450
ALEXANDRIA, VA 22313-1450
www.uspto.gov

17 AUG 2006

Carl Bergman
Rodhakevagen 40
734 38 HALLSTAHAMMAR

In re Aplication of
Bergman et al
PCT No.: PCT/SE2003/001084
Application No: 10/518,961
Int. Filing Date: 24 June 2003
Priority Date: 25 June 2002
Attorney's Docket No.: 341058.581USPC
For: HIGH PRESSURE PRESSING DEVICE
AND METHOD

Dear Mr. Bergman:

You are named as an inventor in the above identified United States patent application, filed under the provisions of 37 CFR 1.47(a) and 35 U.S.C. 116. Should a patent be granted, you will be designated as an inventor.

As a named inventor, you are entitled to inspect any paper in the file wrapper of the application, order copies of all or any part thereof (at a prepaid cost per 37 CFR 1.19) or to make your position of record in the application. Alternatively, you may arrange to do any of the preceding through a registered patent agent or attorney presenting written authorization from you. If you care to join in the application, counsel of record (see below) would presumably assist you. Joining in the application would entail the filing of an appropriate oath or declaration by you pursuant to 37 CFR 1.63.

Rafael Bacares
PCT Legal Examiner
PCT Legal Office
Telephone: (571) 272-3276
Facsimile: (571) 273-0459

Seed Intellectual Property Law Group PLLC
701 5th Avenue Suite 6300
Seattle, WA 98104-7092

UNITED STATES PATENT AND TRADEMARK OFFICE

Commissioner for Patents
United States Patent and Trademark Office
P.O. Box 1450
Alexandria, VA 22313-1450
www.uspto.gov

SCHNADER HARRISON SEGAL & LEWIS, LLP
1600 MARKET STREET
SUITE 3600
PHILADELPHIA PA 19103

COPY MAILED

SEP 15 2008

In re Application of	:	
BOLER, Lewyn B. Jr.	:	
Application No. 10/518,967	:	DECISION ON PETITION
Filed: December 21, 2004	:	TO WITHDRAW
Attorney Docket No. **3008835-0009-PCT-US**	:	FROM RECORD

This is a decision on the Request to Withdraw as attorney or agent of record under 37 C.F.R. § 1.36(b), filed September 05, 2008.

The request is **APPROVED**.

A grantable request to withdraw as attorney/agent of record must be signed by every attorney/agent seeking to withdraw or contain a clear indication that one attorney is signing on behalf of another/others. The Office requires the practitioner(s) requesting withdrawal to certify that he, she, or they have: (1) given reasonable notice to the client, prior to the expiration of the response period, that the practitioner(s) intends to withdraw from employment; (2) delivered to the client or a duly authorized representative of the client all papers and property (including funds) to which the client is entitled; and (3) notified the client of any responses that may be due and the time frame within which the client must respond, pursuant 37 CFR 10.40(c).

The request was signed by Ronald Ventola, II on behalf of all attorneys of record who are associated with customer No. 22469. All attorneys/agents associated with the Customer Number 22469 have been withdrawn. Applicant is reminded that there is no attorney of record at this time.

All future correspondence will be directed to the inventor Lewyn Boler, Jr. at the address indicated below.

Telephone inquiries concerning this decision should be directed to Tredelle Jackson at 571-272-2783.

Tredelle D. Jackson
Paralegal Specialist
Office of Petitions

cc: **LEWYN BOLER, JR.**
1000 EAST CHANNEL STREET
STOCKTON CA 95205

United States Patent and Trademark Office

Commissioner for Patents
United States Patent and Trademark Office
P.O. Box 1450
Alexandria, VA 22313-1450
www.uspto.gov

13 MAR 2007

Jordan and Hamburg
122 East 42nd Street
New York, NY 10168

In re Application of
Ike et al.
Application No. 10/518,986
PCT No.: PCT/JP02/11181
Int. Filing Date: 28 October 2002
Priority Date: 10 July 2002
Atty. Docket No.: F-8518
For: Paper Feed Roller And Fabrication Method Thereof

COMMUNICATION

This is in response to the "Petition Under 37 C.F.R. § 1.42 and § 1.47(a)" filed on 18 September 2006.

DISCUSSION

In a Decision mailed on 15 June 2006, the petition under 37 CFR 1.42 filed on 26 January 2006 was dismissed without prejudice because

> Counsel states that "the second inventor, Kazuhiro OOSAKI, has passed away and has not signed the Declaration. Inspection of the declaration filed on 26 January 2006 reveals that it
> nominates and provides citizenship, residence and postal address information for Kazuhiro Oosaki, but it has not been signed by and does not provide citizenship, residence and postal address information for an individual or individuals indicated to be a legal representative (or all of the heirs) of Kazuhiro Oosaki, as required for relief under 37 CFR 1.42.
>
> Meanwhile, counsel also refers to "a Declaration (with Exhibits (A) to (K)) executed by Toshiji SUGA," who appears from the evidence of record to be an employee of an assignee, SUNCALL CORPORATION, and whose statements include statements related to the issue of whether the wife of the deceased inventor refused to execute an oath or declaration or could not be found or reached after diligent effort, per 37 CFR 1.47(b).
>
> Based on the totality of the evidence presented, it is unclear what type of relief counsel is requesting (i.e., whether relief is sought under 37 CFR 1.42, under 37 CFR 1.47, or under both 37 CFR 1.42 and 1.47). In the event that relief is sought under 37 CFR 1.42, counsel is required to satisfy all of the requirements of that regulation, including presenting an oath or declaration stating all of the required facts and signed on behalf of the deceased inventor by his legal representative or all of his heirs. In the event that relief is sought under 37 CFR 1.47(b), counsel's attention is respectfully directed to MPEP 409.03(c), which states that

> 37 CFR 1.47 should not be considered an alternative to 37 CFR 1.42 or 35 U.S.C. 117 since the language "cannot be found or reached after diligent effort" has no reasonable application to a deceased inventor. In re Application Papers Filed September 10, 1954, 108 USPQ 340 (Comm'r Pat. 1955). See 37 CFR 1.42 and MPEP § 409.01. However, 37 CFR 1.47 does apply where a known legal representative of a deceased inventor cannot be found or reached after diligent effort, or refuses to make application. In such cases, the last known address of the legal representative must be given (see MPEP § 409.03(e)).
>
> In the event that counsel is seeking relief under BOTH 37 CFR 1.42 AND 37 CFR 1.47(b), the oath or declaration should be prepared for signature on behalf of the deceased inventor by his legal representative (or all of his heirs) per 37 CFR 1.42, and counsel should then provide the appropriate showing under 37 CFR 1.47(b) why the absence of the signature(s) of the legal representative (or all heirs) should be excused.

In response, petitioner has provided a declaration signed by joint inventor Takashi IKI, and naming deceased joint inventor Kazuhiro OOSAKI. Petitioner seeks relief under 37 CFR 1.47(a) for the absence of the signature of Mr. Oosaki's legal representative, Mrs. Machiko Oosaki. Thus, treatment under 37 CFR 1.42 and 1.47(a) is appropriate.

Submission Under 37 CFR 1.42

37 CFR 1.42 provides in part that

> In case of the death of the inventor, the legal representative (executor, administrator, etc.) of the deceased inventor may make the necessary oath or declaration, and apply for and obtain the patent.

Meanwhile, 37 CFR 1.497(b)(2), as amended effective 08 September 2000, provides that

> If the person making the oath or declaration is not the inventor (§§ 1.42, 1.43 or 1.47), the oath or declaration shall state the relationship of the person to the inventor, and, upon information and belief, the facts which the inventor would have been required to state. If the person signing the oath or declaration is the legal representative of a deceased inventor, the oath or declaration shall also state that the person is a legal representative and the citizenship, residence and mailing address of the legal representative.

Inspection of the declaration filed on 18 September 2006 reveals that the document signed by Mr. Iki does not indicate that Mr. Oosaki is deceased. It also does not provide the name, relationship (e.g., "legal representative" or "sole heir"), citizenship, residence or mailing address of Mrs. Oosaki, the legal representative alluded to in the petition. However, petitioner has provided a second declaration document which nominates the same inventive entity as the international application, indicates that Mr. Oosaki is "deceased," and enumerates the citizenship, residence and postal address information pertaining to both Mr. Oosaki and his "legal representative," Mrs. Machiko Oosaki. However, this declaration is defective in that it has not been signed on behalf of Mr. Oosaki, nor has the absence of her signature been excused per

37 CFR 1.47(a)(see below). Furthermore, the declaration is not in compliance with 37 CFR 1.69(b), which provides that

> Unless the text of any oath or declaration in a language other than English is in a form provided by the Patent and Trademark Office or in accordance with PCT Rule 4.17(iv), it must be accompanied by an English translation together with a statement that the translation is accurate, except that in the case of an oath or declaration filed under § 1.63, the translation may be filed in the Office no later than two months from the date applicant is notified to file the translation.

Specifically, the translation does not appear to be accompanied by a statement that the translation is accurate.

Petition Under 37 CFR 1.47(a)

Petitioner states that the Mr. Oosaki's legal representative, Machiko Oosaki, "cannot be found or reached after diligent effort," and urges that the absence of her signature on the declaration be excused on this basis.

A petition under 37 CFR 1.47(a) must be accompanied by (1) the fee under 37 CFR 1.17(h), (2) factual proof that the missing joint inventor refuses to execute the application or cannot be reached after diligent effort, (3) a statement of the last known address of the missing inventor, and (4) an oath or declaration by each 37 CFR 1.47(a) applicant on his or her own behalf and on behalf of the non-signing joint inventor.

Regarding requirement (1), the petition fee was paid on 18 September 2006.

Regarding requirement (2), petitioner alleges that Mrs. Oosaki has moved, and that she could not be found or reached after diligent effort. Counsel's attention is respectfully drawn to MPEP 409.03(d), which states in part:

> Where inability to find or reach a nonsigning inventor "after diligent effort" is the reason for filing under 37 CFR 1.47, a statement of facts should be submitted that fully describes the exact facts which are relied on to establish that a diligent effort was made. The fact that a nonsigning inventor is on vacation or out of town and is therefore temporarily unavailable to sign the declaration is not an acceptable reason for filing under 37 CFR 1.47. Furthermore, the fact that an inventor is hospitalized and/or is not conscious is not an acceptable reason for filing under 37 CFR 1.47. 37 CFR 1.43 may be available under these circumstances. See MPEP § 409.02. Such a petition under 37 CFR 1.47 will be dismissed as inappropriate.
>
> The statement of facts must be signed, where at all possible, by a person having firsthand knowledge of the facts recited therein. Statements based on hearsay will not normally be accepted. Copies of documentary evidence such as internet searches, certified mail return receipts, cover letters of instructions, telegrams, that support a finding that the nonsigning inventor could not be found or reached should be made part of the statement. The steps taken to locate the whereabouts of the nonsigning inventor should be included >in the< statement of facts. It is important that the statement contain facts as opposed to conclusions.

The petition is accompanied by a "Declaration of Toshiji Suga In Support For Petition" which states that, on 28 July 2006, Toshiji Suga sent correspondence to Mrs. Oosaki which included a copy of the application papers and a declaration, and which requested that she sign and return the executed declaration. Mr. Suga further states that the Japanese Post Office returned the correspondence in question as undelivered, because "Mrs. Machiko OOSAKI has moved and now has an unknown address." These statements are corroborated by copies (and English translations) of a letter to Mrs. Oosaki dated 28 July 2006, a postal receipt dated "18.7.28," a stamped envelope, and an envelope marked as undelivered because "It was impossible to deliver because the changed new address is unknown." However, petitioner has not adequately established that Mrs. Oosaki could not be found or reached after diligent effort because the petition and supporting documents do not demonstrate diligent efforts undertaken to identify Mrs. Oosaki's new address. For instance, petitioner has not provided a showing as to any internet searches, telephone directory searches, consultations of official residence documentation, or inquiries made of any of Mrs. Oosaki's known associates (if any). In the absence of an appropriate showing of efforts made to locate Mrs. Oosaki, it would not be appropriate to conclude that she "could not be found or reached after diligent effort" within the meaning of 37 CFR 1.47(a).

Regarding requirement (3), the petition provides the last known address of the non-signing legal representative, Mrs. Machiko Oosaki.

Regarding requirement (4), the declaration is not acceptable at this time for the reasons stated above in the discussion concerning 37 CFR 1.42 (specifically, because the declaration is not in compliance with 37 CFR 1.69(b)).

CONCLUSION

The declaration is **NOT ACCEPTED** under 37 CFR 1.42, without prejudice.

The petition under 37 CFR 1.47(a) is **DISMISSED**, without prejudice.

A proper response must be filed within **TWO (2) MONTHS** from the mail date of this decision. Extensions of time under 37 CFR 1.136(a) are available. Failure to file a timely response will result in **ABANDONMENT**.

Any further correspondence with respect to this matter should be addressed to the Assistant Commissioner for Patents, P.O. Box 1450, Mail Stop PCT, Alexandria, VA 22313-1450, with the contents of the letter marked to the attention of the Office of PCT Legal Administration.

George Dombroske
PCT Legal Examiner
Office of PCT Legal Administration
Tel: (571) 272-3283
Fax: (571) 273-0459

0 9 SEP 2008

United States Patent and Trademark Office

Commissioner for Patents
United States Patent and Trademark Office
P.O. Box 1450
Alexandria, VA 22313-1450
www.uspto.gov

Jordan and Hamburg
122 East 42nd Street
New York, NY 10168

In re Application of Iki et al. Application No. 10/518,986 PCT No.: PCT/JP02/11181 Int. Filing Date: 28 October 2002 Priority Date: 10 July 2002 Atty. Docket No.: F-8518 For: Paper Feed Roller And Fabrication Method Thereof	:	DECISION

This is in response to the responses filed on 28 August 2008, 10 August 2007, and14 January 2008, which are being treated as a renewed petition under 37 CFR 1.42 and 1.47(a).

DISCUSSION

In a Decision mailed on 13 March 2007, the submission under 37 CFR 1.42 and petition under 37 CFR 1.47(a) filed on 18 September 2006 were dismissed, without prejudice.

Counsel has submitted a copy of a declaration filed under PCT Rule 4.17(iv), signed by both of the joint inventors, seeking to obviate the issues under 37 CFR .142 and 1.47(a). As noted by petitioner, the copy of the declaration filed on 10 August 2007 did not accurately reflect the declaration which had been filed during the international phase. The 28 August 2008 response was accompanied by a copy of the "correct" declaration under Rule 4.17(iv). Inspection of the declaration under Rule 4.17(iv) as published by the International Bureau, in view of the translation provided by petitioner, reveals that it names and was executed by the inventors nominated in the published international application. Based on the totality of the evidence currently of record, it would be appropriate to accept this declaration in satisfaction of the requirements of 37 CFR 1.497(a) and (b). As such, the issues presented under 37 CFR 1.42 and 37 CFR 1.47(a) are MOOT.

It is noted that the $1020.00 extension of time fee paid on 14 January 2008 was not required, and it is being refunded as authorized in the petition.

DECISION

The submission under 37 CFR 1.42 is **DISMISSED AS MOOT**, without prejudice.

The petition under 37 CFR 1.47(a) is **DISMISSED AS MOOT**, without prejudice.

This application is being forwarded to the Office of Patent Application Processing. Its date under 35 U.S.C. 371(c)(1), (2) and (4) is **21 December 2004**.

/George Dombroske/
George Dombroske
PCT Legal Examiner
Office of PCT Legal Administration
Tel: (571) 272-3283
Fax: (571) 273-0459

UNITED STATES PATENT AND TRADEMARK OFFICE

COMMISSIONER FOR PATENTS
UNITED STATES PATENT AND TRADEMARK OFFICE
P.O. BOX 1450
ALEXANDRIA, VA 22313-1450
www.uspto.gov

17 OCT 2006

NOVARTIS
CORPORATE INTELLECTUAL PROPERTY
ONE HEALTH PLAZA 104/3
EAST HANOVER, NJ 07936-1080

In re Application of LASKY	:	
U.S. Application No.: 10/518,988	:	
PCT Application No.: PCT/IB2003/002794	:	DECISION
Int. Filing Date: 17 June 2003	:	
Priority Date Claimed: 28 June 2002	:	
Attorney Docket No.: ON/4032548A	:	
For: 4-(4-METHYLPIPERAZIN-1-YLMETHYL)...	:	

This is in response to applicant's "Petition to Revive Under 37 CFR 1.137(b) and Response to Notification of Missing Requirements" filed 25 July 2006.

BACKGROUND

On 17 June 2003, applicant filed international application PCT/IB2003/002794, which claimed priority of an earlier United States application filed 28 June 2002. A copy of the international application was communicated to the USPTO from the International Bureau on 08 January 2004. The thirty-month period for paying the basic national fee in the United States expired on 28 December 2004.

On 21 December 2004, applicant filed national stage papers in the United States Designated/Elected Office (DO/EO/US). The submission was accompanied by, *inter alia*, the basic national fee required by 35 U.S.C. 371(c)(1).

On 21 November 2005, the DO/EO/US mailed a Notification of Missing Requirements Under 35 U.S.C. 371 (Form PCT/DO/EO/905), which indicated that an oath or declaration in compliance with 37 CFR 1.497 and a sequence listing in computer readable form must be filed.

International application PCT/IB2003/002794 became abandoned as to the United States for failure to timely respond to the Notification of Missing Requirements.

On 25 July 2006, applicant filed the present petition under 37 CFR 1.137(b).

DISCUSSION

Under 37 CFR 1.137(b), a petition requesting that an application be revived on the grounds of unintentional abandonment must be accompanied by: (1) the required reply unless previously filed, (2) the petition fee as set forth in 37 CFR 1.17(m), (3) a statement that the entire delay in filing the required reply from the due date for the reply until the filing of a grantable petition was unintentional, and (4) a terminal disclaimer if the application was filed before 08 June 1995.

With regard to item (1), applicant has not provided the required reply under 35 U.S.C. 371. Although the petition states that an executed declaration is attached, a review of the application file reveals that an executed declaration is not present.

With regard to item (2), applicant has provided the required petition fee.

With regard to item (3), applicant has not provided the required statement.

With regard to item (4), because the international application was filed after 08 June 1995, no terminal disclaimer is required.

A review of the disclosure reveals that a sequence listing is not required.

CONCLUSION

The petition under 37 CFR 1.137(b) is DISMISSED without prejudice.

The portion of the Notification of Missing Requirements (Form PCT/DO/EO/905) mailed 21 November 2005 which indicated that a sequence listing must be filed is hereby VACATED.

If reconsideration on the merits of the petition is desired, a proper response must be filed within TWO (2) MONTHS from the mail date of this decision. Any reconsideration request should include a cover letter entitled "Renewed Petition Under 37 CFR 1.137(b)".

Please direct further correspondence with respect to this matter to Mail Stop PCT, Commissioner for Patents, Office of PCT Legal Administration, P.O. Box 1450, Alexandria, Virginia 22313-1450, with the contents of the letter marked to the attention of the Office of PCT Legal Administration.

Bryan Lin

Bryan Lin
PCT Legal Examiner
PCT Legal Office

Telephone: 571-272-3303
Facsimile: 571-273-0459

21 NOV 2006

UNITED STATES PATENT AND TRADEMARK OFFICE

COMMISSIONER FOR PATENTS
UNITED STATES PATENT AND TRADEMARK OFFICE
P.O. BOX 1450
ALEXANDRIA, VA 22313-1450
www.uspto.gov

NOVARTIS
CORPORATE INTELLECTUAL PROPERTY
ONE HEALTH PLAZA 104/3
EAST HANOVER, NJ 07936-1080

In re Application of LASKY	:	
U.S. Application No.: 10/518,988	:	
PCT Application No.: PCT/IB2003/002794	:	DECISION
Int. Filing Date: 17 June 2003	:	
Priority Date Claimed: 28 June 2002	:	
Attorney Docket No.: ON/4032548A	:	
For: 4-(4-METHYLPIPERAZIN-1-YLMETHYL)...	:	

This is in response to applicant's "Renewed Petition Under 37 CFR 1.137(b)" filed 07 November 2006.

BACKGROUND

On 17 June 2003, applicant filed international application PCT/IB2003/002794, which claimed priority of an earlier United States application filed 28 June 2002. A copy of the international application was communicated to the USPTO from the International Bureau on 08 January 2004. The thirty-month period for paying the basic national fee in the United States expired on 28 December 2004.

On 21 December 2004, applicant filed national stage papers in the United States Designated/Elected Office (DO/EO/US). The submission was accompanied by, *inter alia*, the basic national fee required by 35 U.S.C. 371(c)(1).

On 21 November 2005, the DO/EO/US mailed a Notification of Missing Requirements Under 35 U.S.C. 371 (Form PCT/DO/EO/905), which indicated that an oath or declaration in compliance with 37 CFR 1.497 and a sequence listing in computer readable form must be filed.

International application PCT/IB2003/002794 became abandoned as to the United States for failure to timely respond to the Notification of Missing Requirements.

On 25 July 2006, applicant filed a petition under 37 CFR 1.137(b).

On 17 October 2006, this Office mailed a decision dismissing the 25 July 2006 petition.

On 07 November 2006, applicant filed the present renewed petition under 37 CFR 1.137(b).

DISCUSSION

Under 37 CFR 1.137(b), a petition requesting that an application be revived on the grounds of unintentional abandonment must be accompanied by: (1) the required reply unless previously filed, (2) the petition fee as set forth in 37 CFR 1.17(m), (3) a statement that the entire delay in filing the required reply from the due date for the reply until the filing of a grantable petition was unintentional, and (4) a terminal disclaimer if the application was filed before 08 June 1995.

Applicant has previously satisfied items (2) and (4) above.

With regard to item (1), the required declaration has been provided.

With regard to item (3), although the renewed petition provides a summary of events which purportedly led to the abandonment of the present application, the petition does not include the required statement. A sample statement appears on Form PTO/SB/64pct, which is available at www.uspto.gov/web/forms/sb64pct.pdf.

CONCLUSION

The renewed petition under 37 CFR 1.137(b) is DISMISSED without prejudice.

If reconsideration on the merits of the petition is desired, a proper response must be filed within TWO (2) MONTHS from the mail date of this decision. Any reconsideration request should include a cover letter entitled "Renewed Petition Under 37 CFR 1.137(b)".

Please direct further correspondence with respect to this matter to Mail Stop PCT, Commissioner for Patents, Office of PCT Legal Administration, P.O. Box 1450, Alexandria, Virginia 22313-1450, with the contents of the letter marked to the attention of the Office of PCT Legal Administration.

BryanLin

Bryan Lin
PCT Legal Examiner
PCT Legal Office

Telephone: 571-272-3303
Facsimile: 571-273-0459

UNITED STATES PATENT AND TRADEMARK OFFICE

COMMISSIONER FOR PATENTS
UNITED STATES PATENT AND TRADEMARK OFFICE
P.O. BOX 1450
ALEXANDRIA, VA 22313-1450
www.uspto.gov

20 DEC 2006

NOVARTIS
CORPORATE INTELLECTUAL PROPERTY
ONE HEALTH PLAZA 104/3
EAST HANOVER, NJ 07936-1080

In re Application of LASKY	:	
U.S. Application No.: 10/518,988	:	
PCT Application No.: PCT/IB2003/002794	:	DECISION
Int. Filing Date: 17 June 2003	:	
Priority Date Claimed: 28 June 2002	:	
Attorney Docket No.: ON/4032548A	:	
For: 4-(4-METHYLPIPERAZIN-1-YLMETHYL)...	:	

This is in response to applicant's "Renewed Petition Under 37 CFR 1.137(b)" filed 04 December 2006.

BACKGROUND

On 17 June 2003, applicant filed international application PCT/IB2003/002794, which claimed priority of an earlier United States application filed 28 June 2002. A copy of the international application was communicated to the USPTO from the International Bureau on 08 January 2004. The thirty-month period for paying the basic national fee in the United States expired on 28 December 2004.

On 21 December 2004, applicant filed national stage papers in the United States Designated/Elected Office (DO/EO/US). The submission was accompanied by, *inter alia*, the basic national fee required by 35 U.S.C. 371(c)(1).

On 21 November 2005, the DO/EO/US mailed a Notification of Missing Requirements Under 35 U.S.C. 371 (Form PCT/DO/EO/905), which indicated that an oath or declaration in compliance with 37 CFR 1.497 and a sequence listing in computer readable form must be filed.

International application PCT/IB2003/002794 became abandoned as to the United States for failure to timely respond to the Notification of Missing Requirements.

On 25 July 2006, applicant filed a petition under 37 CFR 1.137(b).

On 17 October 2006, this Office mailed a decision dismissing the 25 July 2006 petition.

On 07 November 2006, applicant filed a renewed petition under 37 CFR 1.137(b).

On 21 November 2006, this Office mailed a decision dismissing the 07 November 2006 petition.

On 04 December 2006, applicant filed the present second renewed petition under 37 CFR 1.137(b).

DISCUSSION

Under 37 CFR 1.137(b), a petition requesting that an application be revived on the grounds of unintentional abandonment must be accompanied by: (1) the required reply unless previously filed, (2) the petition fee as set forth in 37 CFR 1.17(m), (3) a statement that the entire delay in filing the required reply from the due date for the reply until the filing of a grantable petition was unintentional, and (4) a terminal disclaimer if the application was filed before 08 June 1995.

Applicant has previously satisfied items (1), (2) and (4) above.

With regard to item (3), the requisite statement has been provided.

CONCLUSION

The application has an International Filing Date under 35 U.S.C. 363 of 17 June 2003, and a date under 35 U.S.C. 371(c)(1), (c)(2), and (c)(4) of 07 November 2006.

This application is being forwarded to the United States Designated/Elected Office (DO/EO/US) for further processing in accordance with this decision.

Bryan Lin

Bryan Lin
PCT Legal Examiner
PCT Legal Office

Telephone: 571-272-3303
Facsimile: 571-273-0459

UNITED STATES PATENT AND TRADEMARK OFFICE

Commissioner for Patents
United States Patent and Trademark Office
P.O. Box 1450
Alexandria, VA 22313-1450
www.uspto.gov

NOVARTIS
CORPORATE INTELLECTUAL
PROPERTY
ONE HEALTH PLAZA 104/3
EAST HANOVER NJ 07936-1080

MAILED

JUN 08 2010

OFFICE OF PETITIONS

In re Application of :
Dugan :
Application No. 10/518,989 :
Filed: July 21, 2005 : ON APPLICATION FOR
Attorney Docket No. ON/4-32556A : PATENT TERM ADJUSTMENT
Title: COMBINATION COMPRISING A :
VASCULOSTATIC COMPOUND AND AN :
ALKYLATING AGENT FOR THE :
TREATMENT OF A TUMOR :

This is in response to the "APPLICATION FOR PATENT TERM ADJUSTMENT-PRE-GRANT" filed October 21, 2009. Applicant submits that the correct patent term adjustment to be indicated on the patent is one thousand one hundred fifty-five (1,155) days, not four hundred eighty-two (482) days as calculated by the Office as of the mailing of the initial determination of patent term adjustment. Applicants request this correction solely on the basis that the Office will take in excess of three years to issue this patent.

As the instant application for patent term adjustment requests reconsideration of the patent term adjustment as it relates to the Office's failure to issue the patent within 3 years of the filing date, the application for patent term adjustment under 37 CFR 1.705(b) is **DISMISSED as PREMATURE**.

The $200.00 petition fee set forth in 37 CFR 1.18(e) has been assessed from deposit account no. 19-0134. No additional fees are required.

Knowledge of the actual date the patent issues is required to calculate the amount, if any, of additional patent term patentee is entitled to for Office failure to issue the patent within 3 years. See § 1.702(b). (This is true even where a request for

continued examination (RCE) was filed). The computer will not undertake the § 1.702(b) calculation until the actual date of issuance of the patent has been determined. Likewise, the computer will not calculate any further Office delay under § 1.702(a)(4) or applicant delay under § 1.704(c)(10) until the actual date of issuance of the patent has been determined. As such, the Office cannot make a determination on the correctness of the patent term adjustment until the patent has issued.

Requesting reconsideration of the patent term adjustment to be indicated on the patent under 37 CFR 1.705(b) based on the initial determination of patent term adjustment and a projected issuance date of the patent (or even the filing date of the request for continued examination) is premature. Accordingly, it is appropriate to dismiss as premature such a request.

Rather than file an application for patent term adjustment under 37 CFR 1.705(b) contesting the 37 CFR 1.702(b) calculation at the time of the mailing of the notice of allowance, applicant is advised that they may wait until the time of the issuance of the patent and file a request for reconsideration of the patent term adjustment pursuant to 37 CFR 1.705(d). As the USPTO does not calculate the amount of time earned pursuant to 37 CFR 1.702(b) until the time of the issuance of the patent, the Office will consider any request for reconsideration of the patent term adjustment due to an error in the calculation of 37 CFR 1.702(b) to be timely if the request for reconsideration is filed within two months of the issuance of the patent. However, as to all other bases for contesting the initial determination of patent term adjustment received with the notice of allowance, applicant must timely file an application for patent term adjustment prior to the payment of the issue fee[1].

---

[1] For example, if applicant disputes both the calculation of patent term adjustment under 37 CFR 1.702(a)(1) for Office failure to mail a first Office action or notice of allowance not later than fourteen months after the date on which the application was filed and under 37 CFR 1.702(b) for Office failure to issue a patent within three years of the actual filing date of the application, then applicant must still timely file an application for patent term adjustment prior to the payment of the issue fee to contest the calculation of Office delay in issuing a first Office action or notice of allowance. See 37 CFR 1.705(b) and 35 U.S.C. 154(b)(3)(B). A dispute as to the calculation of the §1.702(a)(1) period raised on request for

Any request for reconsideration of the patent term adjustment indicated on the patent must be timely filed within 2 months after issuance pursuant to 37 CFR 1.705(d) and must include payment of the required fee under 37 CFR 1.18(e).

The Office of Data Management has been advised of this decision. This application is being referred to the Office of Data Management for issuance of the patent.

Telephone inquiries specific to this matter should be directed to Petitions Attorney Charlema Grant at (571) 272-3215.

Anthony Knight
Director
Office of Petitions

---

reconsideration of patent term adjustment under 37 CFR 1.705(d) will be dismissed as untimely filed.

UNITED STATES PATENT AND TRADEMARK OFFICE

UNITED STATES DEPARTMENT OF COMMERCE
United States Patent and Trademark Office
Address: COMMISSIONER FOR PATENTS
P.O. Box 1450
Alexandria, Virginia 22313-1450
www.uspto.gov

APPLICATION NO.	FILING DATE	FIRST NAMED INVENTOR	ATTORNEY DOCKET NO.	CONFIRMATION NO.
10/518,990	08/26/2005	Takayuki Miura	SONY JP 3.3-372	7641

7590 02/13/2008
LERNER, DAVID, LITTENBERG,
KRUMHOLZ & MENTLIK
600 SOUTH AVENUE WEST
WESTFIELD, NJ 07090

EXAMINER
BARRON JR, GILBERTO

ART UNIT	PAPER NUMBER
2132	

MAIL DATE	DELIVERY MODE
02/13/2008	PAPER

DECISION DISMISSING PETITION UNDER 37 CFR 1.138(d)

The declaration of express abandonment will not be recognized

This is in response to the petition under 37 CFR 1.138(d), requesting for a refund of any previously paid search fee and excess claims fee in the above-identified application.

The petition is dismissed.

The express abandonment will **not** be recognized for the reason(s) indicated below:

1. ☐ The petition was not filed in sufficient time to permit the appropriate officials to recognize the abandonment before an examination has been made of the application. See 37 CFR 1.138(d).

2. ☐ The petition was not signed by a party authorized by 37 CFR 1.33(b)(1), (3) or (4).

3. ☒ The application is not an application filed under 35 U.S.C. 111(a) on or after December 8, 2004.

4. ☐ The petition for express abandonment under 1.138(d) is dismissed because the applicant did not pay any search fee and excess claims fees in the above-identified application.

Telephone inquiries should be directed to the Office of Data Management at (571) 272-4200.

Patent Publication Branch
Office of Data Management

FORM PET651D (Rev. 08/07)

UNITED STATES PATENT AND TRADEMARK OFFICE

UNITED STATES DEPARTMENT OF COMMERCE
United States Patent and Trademark Office
Address: COMMISSIONER FOR PATENTS
P.O. Box 1450
Alexandria, Virginia 22313-1450
www.uspto.gov

Robert D. Shedd, Patent Operations
THOMSON Licensing LLC
P.O. Box 5312
Princeton, NJ 08543-5312

Mail Date: 04/21/2010

Applicant	: Junbiao Zhang	: DECISION ON REQUEST FOR
Patent Number	: 7640565	: RECALCULATION of PATENT
Issue Date	: 12/29/2009	: TERM ADJUSTMENT IN VIEW
Appliction No	: 10/518,995	: OF WYETH AND NOTICE OF INTENT TO
Filed	: 12/21/2004	: ISSUE CERTIFICATE OF CORRECTION
		:

The Request for Recalculation is **GRANTED** to the extent indicated.

The patent term adjustment has been determined to be **799** days. The USPTO will *sua sponte* issue a certificate of correction reflecting the amount of PTA days determined by the recalculation.

Prior to the issuance of the certificate of correction, the USPTO will afford patentee an opportunity to be heard and request reconsideration. Accordingly, patentee has **one month or thirty (30) days**, whichever is longer, to file a request for reconsideration of this patent term adjustment calculation. See 35 U.S.C. 154(b)(3)(B)(ii) and 37 CFR 1.322(a)(4). No extensions of time will be granted under 37 CFR 1.136.

Patentee should use document code PET.OP if electronically filing a request for reconsideration of this patent term adjustment calculation. The patentee must also include the information required by 37 CFR 1.705(b)(2) and the fee required by 37 CFR 1.18(e). If patentee does not file a timely request for reconsideration of this patent term adjustment calculation including the information required by 37 CFR 1.705(b)(2) and the fee required by 37 CFR 1.18(e), the USPTO will issue a certificate of correction reflecting the PTA determination noted above.

Patentee should be aware that in order to preserve the right to review in the United States District Court for the District of Columbia of the USPTO patent term adjustment determination, patentee must ensure that he or she also take the steps required under 35 U.S.C. 154(b)(4)(A) in a timely manner. Nothing in the request for recalculation should be construed as providing an alternative time frame for commencing a civil action under 35 U.S.C. 154(b)(4)(A).

Any questions concerning this decision should be directed to the Office of Patent Legal Administration at 571-272-7702.

UNITED STATES PATENT AND TRADEMARK OFFICE

UNITED STATES DEPARTMENT OF COMMERCE
United States Patent and Trademark Office
Address: COMMISSIONER FOR PATENTS
P.O. Box 1450
Alexandria, Virginia 22313-1450
www.uspto.gov

Robert D. Shedd, Patent Operations
THOMSON Licensing LLC
P.O. Box 5312
Princeton, NJ 08543-5312

Mail Date: 05/18/2010

Applicant : Junbiao Zhang
Patent Number : 7640565
Issue Date : 12/29/2009
Application No : 10/518,995
Filed : 12/21/2004

: NOTICE CONCERNING IMPROPER
: CALCULATION OF PATENT TERM
: ADJUSTMENT BASED UPON USPTO
: IMPROPERLY MEASURING REDUCTION
: PERIOD UNDER 37 CFR 1.704(c)(10).

The United States Patent and Trademark Office (USPTO) discovered that in processing the recent recalculation decisions mailed in response to patentee's filed Request for Recalculation of Patent Term Adjustment in view of Wyeth, the USPTO improperly measured the reduction period for reductions under 37 CFR 1.704(c)(10). Pursuant to 37 CFR 1.704(c)(10), patentee's reduction begins on the date of filing the amendment under 37 CFR 1.312 ("1.312 amendment") or other related paper and ends on the date that the Office mails a response to the filing of the 1.312 amendment or other paper. It has been discovered that during the recalculation, the calculation failed to the limit the reduction to the mail date of the response to the 1.312 amendment or other paper. Accordingly, patentee's reductions were greater than warranted.

This notice **VACATES** the previous GRANTED request for recalculation and provides patentee with a revised GRANTED recalculation.

The patent term adjustment has been determined to be **811** days. The USPTO will *sua sponte* issue a certificate of correction reflecting the amount of patent term adjustment (PTA) days determined by the recalculation.

Prior to the issuance of the certificate of correction, the USPTO will afford patentee an opportunity to be heard and request reconsideration. Accordingly, patentee has **one month or thirty (30) days** from the mail date of this notice, whichever is longer, to file a request for reconsideration of this PTA calculation. See 35 U.S.C. § 154(b)(3)(B)(ii) and 37 CFR 1.322(a)(4).

Patentee should use document code PET.OP if electronically filing a request for reconsideration of this PTA calculation. The patentee must also include the information required by 37 CFR 1.705(b)(2), and the fee required by 37 CFR 1.18(e). If patentee does not file a timely request for reconsideration of this PTA calculation, including the information required by 37 CFR 1.705(b)(2) and the fee required by 37 CFR 1.18(e), the USPTO will issue a certificate of correction reflecting the PTA determination noted above.

Patentee should be aware that in order to preserve the right of review of the USPTO's PTA determination in the United States District Court for the District of Columbia, patentee must ensure that the steps required under 35 U.S.C. § 154 (b)(4) are taken in a timely manner. Nothing in the request for recalculation should be construed as providing an alternative time frame for commencing a civil action under 35 U.S.C. § 154(b)(4).

UNITED STATES PATENT AND TRADEMARK OFFICE

COMMISSIONER FOR PATENTS
UNITED STATES PATENT AND TRADEMARK OFFICE
P.O. BOX 1450
ALEXANDRIA, VA 22313-1450
www.uspto.gov

JOSEPH S TRIPOLI
THOMSON LICENSING INC
P O BOX 5312
PRINCETON, NJ 08543-5312

COPY MAILED

SEP 28 2006

OFFICE OF PETITIONS

ON PETITION

In re Application of	:
Junbiao Zhang, et al.	:
Application No. 10/518,997	:
Filed: December 21, 2004	:
Attorney Docket No. PU020309	:

This is a decision on the petition, filed September 21, 2006, under 37 CFR 1.313(a) to withdraw the above-identified application from issue.

The petition is **DISMISSED**.

37 CFR 1.313(a) states in part:

> "Applications may be withdrawn from issue for further action at the initiative of the Office or upon petition by the applicant. To request that the Office withdraw an application from issue, applicant must file a petition under this section including the fee set forth in 1.17(h) and a showing of good and sufficient reason why withdrawal of the application from issue is necessary.

While the petition includes the requisite petition fee, it does not set forth good and sufficient reasons as to why withdrawal of the application from issue is necessary. Petitioner merely states that the examiner has committed an error in denying his claim for priority. An appropriate avenue for relief is by way of a petition under 37 CFR 1.181 for review of the examiner's action in denying the claim for priority.

Further, 37 CFR 1.313(a) goes on to state:

> "A petition under this section is not required if a request for continued examination under 1.114 is filed prior to payment of the issue fee."

Therefore, the filing of a RCE under 37 CFR 1.114 with a submission and the fee set forth in 37 CFR 1.17(e) would have also been a proper available option to petitioner.

The application is being referred to the Technology Center 2611 to consider the present petition under the merits of 37 CFR 1.181.

Telephone inquiries regarding this decision may be directed to the undersigned at (571) 272-3204.

Sherry D. Brinkley
Petitions Examiner
Office of Petitions

08 JUL 2005

UNITED STATES PATENT AND TRADEMARK OFFICE

COMMISSIONER FOR PATENTS
UNITED STATES PATENT AND TRADEMARK OFFICE
P.O. BOX 1450
ALEXANDRIA, VA 22313-1450
www.uspto.gov

#3

Michael P. Dunnam
Woodcock Washburn LLP
One Liberty Place - 46th Floor
Philadelphia, PA 19103

In re Application of BELL, Robert A. Application No.: 10/519,020 PCT No.: PCT/US02/19991 Int. Filing Date: 21 June 2002 Priority Date: 21 June 2001 Docket No.: RBAR-0005 For: METHOD AND APPARATUS FOR SPATIALLY COORDINATING, STORING AND MANIPULATING COMPUTER AIDED DESIGN DRAWINGS	DECISION ON PETITION UNDER 37 CFR 1.137(b)

Applicant's "Petition For Revival of an Application For Patent Abandoned Unintentionally Under 37 CFR §1.137(b)," filed in the above-captioned application on 21 December 2004 is **GRANTED**.

Applicant states that the entire delay in filing the required reply from the due date for the required reply until the filing of a grantable petition under 37 CFR 1.137(b) was unintentional, in satisfaction of 37 CFR 1.137(b)(3). The petition fee and basic national fee have been submitted. A terminal disclaimer is not required as the application was filed on or after 08 June 1995. Accordingly, all requirements under 37 CFR 1.137(b) have been satisfied.

Applicant submitted a signed declaration during the international phase, but it did not accompany the original submission and did not identify the application to which is was directed. As such, it is not sufficient.

This application is being forwarded to the National Stage Processing Branch of the Office of PCT Operations for continued processing in accordance with this decision, including the mailing of a Notification of Missing Requirements (Form PCT/DO/EO/905) indicating that an oath or declaration in compliance with 37 CFR 1.497(a)-(b) and the surcharge for late filing of the oath or declaration are required.

Erin P. Thomson

Erin P. Thomson
Attorney Advisor
PCT Legal Administration

Telephone: 571-272-3292
Facsimile: 571-273-0459

UNITED STATES PATENT AND TRADEMARK OFFICE

UNITED STATES DEPARTMENT OF COMMERCE
United States Patent and Trademark Office
Address: COMMISSIONER FOR PATENTS
P.O. Box 1450
Alexandria, Virginia 22313-1450
www.uspto.gov

GIFFORD, KRASS, SPRINKLE,ANDERSON & CITKOWSKI, P.C
PO BOX 7021
TROY, MI 48007-7021

Mail Date: 04/21/2010

Applicant	: Marina B Jensen	: DECISION ON REQUEST FOR
Patent Number	: 7588686	: RECALCULATION of PATENT
Issue Date	: 09/15/2009	: TERM ADJUSTMENT IN VIEW
Appliction No	: 10/519,025	: OF WYETH AND NOTICE OF INTENT TO
Filed	: 12/22/2004	: ISSUE CERTIFICATE OF CORRECTION
		:

The Request for Recalculation is **GRANTED** to the extent indicated.

The patent term adjustment has been determined to be **1029** days. The USPTO will *sua sponte* issue a certificate of correction reflecting the amount of PTA days determined by the recalculation.

Prior to the issuance of the certificate of correction, the USPTO will afford patentee an opportunity to be heard and request reconsideration. Accordingly, patentee has **one month or thirty (30) days**, whichever is longer, to file a request for reconsideration of this patent term adjustment calculation. See 35 U.S.C. 154(b)(3)(B)(ii) and 37 CFR 1.322(a)(4). No extensions of time will be granted under 37 CFR 1.136.

Patentee should use document code PET.OP if electronically filing a request for reconsideration of this patent term adjustment calculation. The patentee must also include the information required by 37 CFR 1.705(b)(2) and the fee required by 37 CFR 1.18(e). If patentee does not file a timely request for reconsideration of this patent term adjustment calculation including the information required by 37 CFR 1.705(b)(2) and the fee required by 37 CFR 1.18(e), the USPTO will issue a certificate of correction reflecting the PTA determination noted above.

Patentee should be aware that in order to preserve the right to review in the United States District Court for the District of Columbia of the USPTO patent term adjustment determination, patentee must ensure that he or she also take the steps required under 35 U.S.C. 154(b)(4)(A) in a timely manner. Nothing in the request for recalculation should be construed as providing an alternative time frame for commencing a civil action under 35 U.S.C. 154(b)(4)(A).

Any questions concerning this decision should be directed to the Office of Patent Legal Administration at 571-272-7702.

UNITED STATES PATENT AND TRADEMARK OFFICE

UNITED STATES DEPARTMENT OF COMMERCE
United States Patent and Trademark Office
Address: COMMISSIONER FOR PATENTS
P.O. Box 1450
Alexandria, Virginia 22313-1450
www.uspto.gov

BASF Performance Products LLC
Patent Department
540 White Plains Road
P.O. Box 2005
Tarrytown, NY 10591

Mail Date: 04/20/2010

Applicant	: Andreas Muhlebach	: DECISION ON REQUEST FOR
Patent Number	: 7595359	: RECALCULATION of PATENT
Issue Date	: 09/29/2009	: TERM ADJUSTMENT IN VIEW
Appliction No	: 10/519,030	: OF WYETH AND NOTICE OF INTENT TO
Filed	: 12/22/2004	: ISSUE CERTIFICATE OF CORRECTION
		:

The Request for Recalculation is **GRANTED** to the extent indicated.

The patent term adjustment has been determined to be **1255** days. The USPTO will *sua sponte* issue a certificate of correction reflecting the amount of PTA days determined by the recalculation.

Prior to the issuance of the certificate of correction, the USPTO will afford patentee an opportunity to be heard and request reconsideration. Accordingly, patentee has **one month or thirty (30) days**, whichever is longer, to file a request for reconsideration of this patent term adjustment calculation. See 35 U.S.C. 154(b)(3)(B)(ii) and 37 CFR 1.322(a)(4). No extensions of time will be granted under 37 CFR 1.136.

Patentee should use document code PET.OP if electronically filing a request for reconsideration of this patent term adjustment calculation. The patentee must also include the information required by 37 CFR 1.705(b)(2) and the fee required by 37 CFR 1.18(e). If patentee does not file a timely request for reconsideration of this patent term adjustment calculation including the information required by 37 CFR 1.705(b)(2) and the fee required by 37 CFR 1.18(e), the USPTO will issue a certificate of correction reflecting the PTA determination noted above.

Patentee should be aware that in order to preserve the right to review in the United States District Court for the District of Columbia of the USPTO patent term adjustment determination, patentee must ensure that he or she also take the steps required under 35 U.S.C. 154(b)(4)(A) in a timely manner. Nothing in the request for recalculation should be construed as providing an alternative time frame for commencing a civil action under 35 U.S.C. 154(b)(4)(A).

Any questions concerning this decision should be directed to the Office of Patent Legal Administration at 571-272-7702.

UNITED STATES PATENT AND TRADEMARK OFFICE

Commissioner for Patents
United States Patent and Trademark Office
P.O. Box 1450
Alexandria, VA 22313-1450
www.uspto.gov

FISH & RICHARDSON P.C.
P.O. BOX 1022
MINNEAPOLIS MN 55440-1022

COPY MAILED

MAR 1 2 2008

OFFICE OF PETITIONS

In re Application of
FORTMAN, Peter A. et al.
Application No. 10/519,095
Filed: January 27, 2006
Attorney Docket No. **06975-551US1**

DECISION ON PETITION
TO WITHDRAW
FROM RECORD

This is a decision on the Request to Withdraw as attorney or agent of record under 37 C.F.R. § 1.36(b), filed November 14, 2007.

The request is **APPROVED**.

A grantable request to withdraw as attorney/agent of record must be signed by every attorney/agent seeking to withdraw or contain a clear indication that one attorney is signing on behalf of another/others. A request to withdraw will not be approved unless at least 30 (thirty) days would remain between the date of approval and the later of the expiration date of a time to file a response or the expiration date of the maximum time period which can be extended under 37 C.F.R. § 1.136(a).

The request was signed by Babak Akhlaghi. Babak Akhlaghi has been withdrawn as attorneys or agents of record all other attorneys remain of record. The correspondence address of record remains unchanged.

Telephone inquiries concerning this decision should be directed to Tredelle Jackson at 571-272-2783.

Tredelle D. Jackson
Petitions Examiner
Office of Petitions

03 JUN 2005

UNITED STATES PATENT AND TRADEMARK OFFICE

COMMISSIONER FOR PATENTS
UNITED STATES PATENT AND TRADEMARK OFFICE
P.O. BOX 1450
ALEXANDRIA, VA 22313-1450
www.uspto.gov

Bozicevic, Field & Francis, LLP
1900 University Avenue, Suite 200
East Palo Alto, CA 94303

In re Application of LEE	:	
U.S. Application No.: 10/519,128	:	
PCT Application No.: PCT/US03/14304	:	
Int. Filing Date: 07 May 2003	:	DECISION
Priority Date Claimed: 08 May 2002	:	
Attorney Docket No.: UCAL-253US1	:	
For: METHODS AND COMPOSITIONS FOR	:	
CORRECTION OF CARDIAC	:	
CONDUCTION DISTURBANCES	:	

This is in response to applicant's "Petition to Revive an Application Abandoned Unintentionally Under 37 C.F.R. §1.137(b)" filed 22 December 2004.

BACKGROUND

On 07 May 2003, applicant filed international application PCT/US03/14304, which claimed priority of an earlier United States application filed 08 May 2002. The thirty-month period for paying the basic national fee in the United States expired on 08 November 2004.

International application PCT/US03/14304 became abandoned as to the United States for failure to timely pay the basic national fee.

On 22 December 2004, applicant filed the present petition under 37 CFR 1.137(b).

DISCUSSION

Under 37 CFR 1.137(b), a petition requesting that an application be revived on the grounds of unintentional abandonment must be accompanied by: (1) the required reply unless previously filed, (2) the petition fee as set forth in 37 CFR 1.17(m), (3) a statement that the entire delay in filing the required reply from the due date for the reply until the filing of a grantable petition was unintentional, and (4) a terminal disclaimer if the application was filed before 08 June 1995.

With regard to item (1), applicant has provided the required basic national fee under 35 U.S.C. 371.

With regard to item (2), applicant has provided the required petition fee.

With regard to item (3), applicant has provided the required statement.

With regard to item (4), because the international application was filed after 08 June 1995, no terminal disclaimer is required.

CONCLUSION

For the reasons above, the petition under 37 CFR 1.137(b) is GRANTED.

This application is being forwarded to the United States Designated/Elected Office (DO/EO/US) for further processing in accordance with this decision, including preparation and mailing of a Notification of Missing Requirements under 35 U.S.C. 371 (Form PCT/DO/EO/905) indicating that an oath or declaration in compliance with 37 CFR 1.497 must be filed.

Bryan Tung
PCT Legal Examiner
PCT Legal Office

Telephone: 571-272-3303
Facsimile: 571-273-0459

UNITED STATES PATENT AND TRADEMARK OFFICE

Commissioner for Patents
United States Patent and Trademark Office
P.O. Box 1450
Alexandria, VA 22313-1450
www.uspto.gov

13 FEB 2006

JEFFREY M. GREENMAN
BAYER PHARMACEUTICALS CORPORATION
400 MORGAN LANE
WEST HAVEN CT 06516

In re Application of	:	
HANING et al.	:	DECISION ON
Application No.: 10/519,129	:	
PCT No.: PCT/EP03/06611	:	PAPERS
Int. Filing Date: 24 June 2003	:	
Priority Date: 03 July 2002	:	UNDER 37 CFR 1.42
Attorney's Docket No.: Le A 36 197	:	
For: NOVEL USE OF IMIDAZOTRIAZINONES	:	

This is a decision on the submission filed by applicants on 28 September 2005, which was accompanied by, *inter alia*, a declaration of the inventors. The indication in this declaration that inventor Ulrich Niewohner is deceased has been treated as a request for status under 37 CFR 1.42.

BACKGROUND

On 24 June 2003, applicants filed international application PCT/EP03/06611 which claimed a priority date of 03 July 2002 and designated the United States. A copy of the international application was communicated to the United States Patent and Trademark Office from the International Bureau on 15 January 2004. The thirty-month period for paying the basic national fee in the United States expired at midnight on 03 January 2005.

On 22 December 2004, applicants filed, *inter alia*, a transmittal letter for entry into the national stage in the United States accompanied by, *inter alia*, the basic national fee.

On 29 July 2005, the United States Designated/Elected Office (DO/EO/US) mailed a NOTIFICATION OF MISSING REQUIREMENTS UNDER 35 U.S.C. 371 (Form PCT/DO/EO/905) indicating, *inter alia*, that an oath or declaration in compliance with 37 CFR 1.497(a)-(b) and the surcharge under 37 CFR 1.492(e) for providing the oath or declaration later than thirty months from the priority date were required.

On 28 September 2005, applicants filed the instant submission which was accompanied by, *inter alia*, a declaration of inventors and the surcharge under 37 CFR 1.492(e). The indication in

this declaration that inventor Ulrich Niewohner is deceased has been treated as a request for status under 37 CFR 1.42.

DISCUSSION

37 CFR 1.41(a)(4) states:

> The inventorship of an international application entering the national stage under 35 U.S.C. 371 is that inventorship set forth in the international application, which includes any change effected under PCT Rule 92bis. See § 1.497(d) and (f) for filing an oath or declaration naming an inventive entity different from the inventive entity named in the international application, or if a change to the inventive entity has been effected under PCT Rule 92bis subsequent to the execution of any declaration filed under PCT Rule 4.17(iv) (§ 1.48(f)(1) does not apply to an international application entering the national stage under 35 U.S.C. 371).

The declaration filed 28 September 2005 does not list the inventorship set forth in the international application. The international application identifies Maria Niewohner as an inventor while the declaration identifies her as an "heiress" rather than as an inventor. A Form PCT/IB/306 (NOTIFICATION OF THE RECORDING OF A CHANGE) from the International Bureau indicating that an inventor has been removed does not appear in the file. Nor is there any other indication that a PCT Rule 92bis change has been made in the above-identified international application. Accordingly, the inventorship in the national stage is the inventorship set forth in the international application and the declaration filed 28 September 2005 is not sufficient.

The submission filed 28 September 2005 has been reviewed and would be in compliance with 37 CFR 1.42 if the above-mentioned defect were corrected as set forth below. The submission of the declaration executed by the sole heir of the deceased inventor is hereby construed as an indication that no legal representative of the deceased's estate has been appointed and that no legal representative is required by the applicable law to be appointed and thus the sole heir is signing as the legal representative of the estate. If this interpretation is incorrect, applicant is required to promptly notify the Office of such and to submit a declaration properly executed by the legal representative of the deceased inventor in response to this decision.

CONCLUSION

For the above reasons, the request for status under 37 CFR 1.42 is **REFUSED**.

Applicants are required to file a declaration in compliance with 37 CFR 1.497(a)-(b) naming the proper inventive entity, or a proper change of inventorship under 37 CFR 1.497(d), or a Form PCT/IB/306 indicating a change effected under PCT Rule 92bis corresponding to the declaration filed 28 September 2005, within TWO (2) MONTHS from the date of mailing of this decision. Extensions of time may be obtained under 37 CFR 1.136(a). Failure to timely file a proper reply will result in abandonment of the application.

Please direct further correspondence with respect to this matter to Mail Stop PCT, Commissioner for Patents, Office of PCT Legal Administration, P.O. Box 1450, Alexandria, Virginia 22313-1450, with the contents of the letter marked to the attention of the Office of PCT Legal Administration.

Daniel Stemmer
Legal Examiner
PCT Legal Affairs
Office of Patent Cooperation Treaty
Legal Administration
Telephone: (571) 272-3301
Facsimile: (571) 273-0459

#10

UNITED STATES PATENT AND TRADEMARK OFFICE

Commissioner for Patents
United States Patent and Trademark Office
P.O. Box 1450
Alexandria, VA 22313-1450
www.uspto.gov

15 SEP 2006

Susan M. Pellegrino
Bayer Pharmaceuticals Corporation
400 Morgan Lane
West Haven, CT 06516-4175

In re Application of	:	
HANING, et al.	:	
Application No.: 10/519,129	:	DECISION ON PETITION
PCT No.: PCT/EP03/06611	:	
Int. Filing Date: 24 June 2003	:	UNDER 37 CFR 1.497(d)
Priority Date: 03 July 2002	:	
Atty. Docket No.: Le A 36 197	:	
For: NOVEL USE OF IMIDAZOTRIAZINONES	:	

This decision is in response to applicant's "Response to Decision on Papers Under 37 CFR 1.42" filed 14 August 2006 in the United States Patent and Trademark Office (USPTO). The petition is being treated as a request under 37 CFR 1.497(d).

BACKGROUND

On 13 February 2006, applicant was mailed a decision dismissing applicant's request for status under 37 CFR 1.42. Applicant was afforded two months to file any request for reconsideration and advised that this period could be extended pursuant to 37 CFR 1.136(a).

On 14 August 2006, applicant filed the present request which is being treated as a petition under 37 CFR 1.497(d) accompanied by a petition for a four-month extension of time and payment of the appropriate extension of time fee.

DISCUSSION

37 CFR 1.497(d) [formally, 37 CFR 1.48] states in part: "If the oath or declaration filed pursuant to 35 U.S.C. 371(c)(4) and this section names an inventive entity different from the inventive entity set forth in the international application....applicant must submit:

(1) a statement from each person being added or deleted as an inventor that the error in inventorship occurred without any deceptive intention on his or her part;

(2) the fee set forth in 37 CFR 1.17(i); and

(3) if an assignment has been executed by any of the original named inventors, the written consent of the assignee in compliance with 37 CFR 3.73(b); and

(4) any new oath or declaration required by paragraph (f) of this section.

Applicant has satisfied items (1), (2) and (4).

Regarding item (3), applicant has not included a statement from the assignee consenting to the deletion of Maria Niewohner as an inventor.

In light of the above, it is not possible to grant applicant's petition at this time.

A decision on the request for status under 37 CFR 1.42 will be held in abeyance pending the consent of the assignee to delete Ms. Niewohner.

CONCLUSION

For the reasons above, applicant's request under 37 CFR 1.497(d) is **DISMISSED** without prejudice.

Applicant is hereby afforded **TWO (2) MONTHS** from the mail date of this decision to file any request for reconsideration. Any reconsideration request should include a cover letter entitled, "Renewed Petition Under 37 CFR 1.497(d)." No additional petition fee is required. Extensions of time may be obtained under 37 CFR 1.136(a).

Any further correspondence with respect to this matter should be directed to Mail Stop PCT, Commissioner for Patents, Office of PCT Legal Administration, P.O. Box 1450, Alexandria, Virginia 22313-1450, with the contents of the letter marked to the attention of the Office of PCT Legal Administration.

Derek A. Putonen
Attorney Advisor
Office of PCT Legal Administration
Tel: (571) 272-3294
Fax: (571) 273-0459

#12

UNITED STATES PATENT AND TRADEMARK OFFICE

Commissioner for Patents
United States Patent and Trademark Office
P.O. Box 1450
Alexandria, VA 22313-1450
www.uspto.gov

18 JAN 2007

Susan M. Pellegrino
Bayer Pharmaceuticals Corporation
400 Morgan Lane
West Haven, CT 06516-4175

In re Application of	:	DECISION ON RENEWED
HANING, et al.	:	
Application No.: 10/519,129	:	PETITION UNDER
PCT No.: PCT/EP03/06611	:	
Int. Filing Date: 24 June 2003	:	37 CFR 1.497(d)
Priority Date: 03 July 2002	:	
Atty. Docket No.: Le A 36 197	:	AND 37 CFR 1.42
For: NOVEL USE OF IMIDAZOTRIAZINONES	:	

This decision is in response to applicant's "Response to Decision on Petition Under 37 CFR 1.497(d)" filed 19 December 2006 in the United States Patent and Trademark Office (USPTO).

BACKGROUND

On 15 September 2006, applicant was mailed a decision dismissing applicant's petition under 37 CFR 1.497(d). Applicant was afforded two months to file any request for reconsideration and advised that this period could be extended pursuant to 37 CFR 1.136(a).

On 19 December 2006, applicant filed the present renewed petition under 37 CFR 1.497(d) accompanied by a petition for a one-month extension of time and payment of the appropriate extension of time fee. As such, applicant's submission is considered timely filed.

DISCUSSION

I. Renewed Petition Under 37 CFR 1.497(d)

As detailed in the decision mailed 15 September 2006, 37 CFR 1.497(d) [formally, 37 CFR 1.48] states in part: "If the oath or declaration filed pursuant to 35 U.S.C. 371(c)(4) and this section names an inventive entity different from the inventive entity set forth in the international application....applicant must submit:

(1) a statement from each person being added or deleted as an inventor that the error in inventorship occurred without any deceptive intention on his or her part;

(2) the fee set forth in 37 CFR 1.17(i); and

(3) if an assignment has been executed by any of the original named inventors, the written consent of the assignee in compliance with 37 CFR 3.73(b); and

(4) any new oath or declaration required by paragraph (f) of this section.

Applicant previously satisfied items (1), (2) and (4).

A review of the present filing finds that applicant has presently submitted the consent of the assignee to the deletion of Maria Theresia Niewohner as a listed inventor in the application. In addition, applicant has provided the proper certification under 37 CFR 3.73(b) as to the establishment of the right of the assignee to take action in the case. Therefore, it is proper to grant applicant's renewed petition at this time.

II. Request For Status Under 37 CFR 1.42

Pursuant to 37 CFR 1.42, first sentence:

"In case of the death of the inventor, the legal representative (executor, administrator, etc.) of the deceased inventor may make the necessary oath or declaration, and apply for and obtain a patent."

As detailed in the decision mailed 13 February 2006, the filed declaration complies with te requirements of 37 CFR 1.42, as well as, 37 CFR 1.497(b) in that the declaration provides the citizenship, residence, and mailing address for both the deceased inventor and the legal representative. As such, the request for status under 37 CFR 1.42 is granted.

CONCLUSION

For the reasons discussed above, the renewed petition under 37 CFR 1.497(d) and request for status under 37 CFR 1.42 are **GRANTED**.

A review of the application papers reveals that applicant has now completed all the requirements of 35 U.S.C. 371 for entry into the national stage. This application has an international application filing date of 24 June 2003 and will be given a date of **28 September 2005**under 35 U.S.C. 371(c)(1), (c)(2) and (c)(4).

The application is being returned to the United States Designated/Elected Office for further processing in accordance with this decision.

Derek A. Putonen
Attorney Advisor
Office of PCT Legal Administration
Tel: (571) 272-3294
Fax: (571) 273-0459

03 JUL 2006

#5

UNITED STATES PATENT AND TRADEMARK OFFICE

Commissioner for Patents
United States Patent and Trademark Office
P.O. Box 1450
Alexandria, VA 22313-1450
www.uspto.gov

MYERS BIGEL SIBLEY & SAJOVEC
PO BOX 37428
RALEIGH NC 27627

In re Application of	:	
ORGEN, Per	:	
Application No.: 10/519,130	:	DECISION
PCT No.: PCT/EP03/05842	:	
Int. Filing Date: 04 June 2003	:	ON PETITION UNDER
Priority Date: 06 June 2002	:	
Docket No.: 9342-6	:	37 CFR 1.137(b)
For: GRAPHICAL INTERFACE FOR	:	
EXPANDABLE MENUS	:	

Applicants' "Petition For Revival of an Application For Patent Abandoned Unintentionally Under 37 C.F.R. 1.137(b)," filed in the above-captioned application on 13 December 2005 is **GRANTED**.

Applicant's statement that the entire delay in filing the fees was unintentional is construed to mean that "the entire delay in filing the required reply from the due date for the required reply until the filing of a grantable petition under 37 CFR 1.137(b) was unintentional," as required by 37 CFR 1.137(b)(3). If this understanding is not correct, applicant must notify the Office immediately. The appropriate national fee and petition fee have been paid. A terminal disclaimer is not required as the application was filed on or after 08 June 1995. Accordingly, all requirements under 37 CFR 1.137(b) have been satisfied.

A signed declaration was furnished during the international phase. However, it contains non-initialed, non-dated alterations to the address of the inventor. 37 CFR 1.52(c)(1). As such, it fails to comply with Office requirements.

This application is being forwarded to the National Stage Processing Branch of the Office of PCT Operations for continued processing in accordance with this decision, including mailing of a Notification of Missing Requirements (Form PCT/DO/EO/905) indicating that an oath or declaration in compliance with 37 CFR 1.497(a)-(b) and the fee for late filing of the search fee, examination fee or oath or declaration is required.

Erin P. Thomson

Erin P. Thomson
Attorney Advisor
PCT Legal Administration

Telephone: 571-272-3292
Facsimile: 571-273-0459

1 6 NOV 2007

UNITED STATES PATENT AND TRADEMARK OFFICE

Commissioner for Patents
United States Patent and Trademark Office
P.O. Box 1450
Alexandria, VA 22313-1450
www.uspto.gov

MYERS BIGEL SIBLEY & SAJOVEC
PO BOX 37428
RALEIGH NC 27627

In re Application of	:	
ORGEN, Per	:	
Application No.: 10/519,130	:	DECISION
PCT No.: PCT/EP03/05842	:	
Int. Filing Date: 04 June 2003	:	ON PETITION UNDER
Priority Date: 06 June 2002	:	
Docket No.: 9342-6	:	37 CFR 1.181
For: GRAPHICAL INTERFACE FOR	:	
EXPANDABLE MENUS	:	

This decision is in response to applicant's petition to revive an unavoidably abandoned application, filed in the United States Patent and Trademark Office on 18 September 2007. It has been treated as a petition to withdraw a holding of abandonment under 37 CFR 1.181. The petition fee of $500 will be credited to deposit account no. 50-0220, as authorized.

BACKGROUND

On 18 September 2006, the Office mailed Notification of Missing Requirements (Form PCT/DO/EO/905) indicating, *inter alia*, that an oath or declaration in compliance with 37 CFR 1.497(a)-(b) and the surcharge for late filing search fee, examination fee or oath or declaration were required.

On 24 August 2007, the Office mailed Notification of Abandonment (Form PCT/DO/EO/909) indicating that the application went abandoned for failure to timely reply to the Notification of Missing Requirements.

On 18 September 2007, applicants filed the instant petition.

DISCUSSION

The showing required to establish nonreceipt of an Office communication is set forth in the notice entitled *Withdrawing the Holding of Abandonment When Office Actions Are Not Received*, 1156 O.G. 53 (Nov. 16, 1993). The showing must include: (1) a statement by the practitioner that the Office action was not received by the practitioner; (2) a statement attesting that a search of the file jacket and docket records indicates that the Office action was not received; and (3) a copy of the docket record where the non-received Office action would have been entered had it been received (the docket record must also be referenced in practitioner's statement).

Items (1) and (2) have been satisfied. Practitioner states that the Notification of Missing Requirement was not received and indicates that a search of the file did not locate the notification. The docket clerk states that a search of the docket records indicates that the Notification of Missing Requirements was not received.

Item (3) has not been satisfied. Practitioner must provide a copy of the docket records for the firm, where the nonrecieved Office communication would have been entered had it been received and

docketed and reference the docket record in the practitioner's statement. "For example, if a three month period for reply was set in the nonreceived Office Action, a copy of the docket report showing all replies docketed for a date three months from the mail date of the nonreceived Office action must be submitted as documentary proof of nonreceipt of the Office action." MPEP §711.03(c) para. II. The docket records for this application alone are not sufficient.

Further, as indicated in the Decision On Petition Under 37 CFR 1.137(b) mailed 18 September 2006, the declaration supplied during the international phase contained non-initialed, non-dated alterations. "Any changes made in ink in the application or oath prior to signing should be initialed and dated by the applicants prior to execution of the oath or declaration. The Office will not consider whether noninitialed and/or nondated alterations were made before or after signing of the oath or declaration but will require a new oath or declaration." MPEP 605.04(a). Such changes cast doubt on the content of the declaration executed by the inventor. Under PCT Rule 51*bis*.2, the Office is authorized to ask for a new oath or declaration.

CONCLUSION

For the reasons set forth above, the petition under 37 CFR 1.181 is **DISMISSED** without prejudice.

The application remains **ABANDONED**.

If reconsideration on the merits of this petition is desired, a proper reply, including an oath or declaration of the inventor in compliance with 37 CFR 1.497(a)-(b) and the surcharge fee, is required within TWO (2) MONTHS from the mail date of this decision. Extensions of time are available under 37 CFR 1.136(a). Any reconsideration request should include a cover letter entitled "Renewed Petition Under 37 CFR 1.181."

Any further correspondence with respect to this matter may be filed electronically via EFS-Web or if mailed, should be addressed to the Mail Stop PCT, Commissioner for Patents, Office of PCT Legal Administration, P.O. Box 1450, Alexandria, Virginia 22313-1450, with the contents of the letter marked to the attention of the Office of PCT Legal Administration.

/Erin P. Thomson/

Erin P. Thomson
Attorney Advisor
PCT Legal Administration

Telephone: 571-272-3292
Facsimile: 571-273-0459

0 5 MAY 2009

UNITED STATES PATENT AND TRADEMARK OFFICE

Commissioner for Patents
United States Patent and Trademark Office
P.O. Box 1450
Alexandria, VA 22313-1450
www.uspto.gov

MYERS BIGEL SIBLEY & SAJOVEC
PO BOX 37428
RALEIGH NC 27627

In re Application of	:	
ORGEN, Per	:	
Application No.: 10/519,130	:	DECISION
PCT No.: PCT/EP03/05842	:	
Int. Filing Date: 04 June 2003	:	ON PETITION UNDER
Priority Date: 06 June 2002	:	
Docket No.: 9342-6	:	37 CFR 1.181
For: GRAPHICAL INTERFACE FOR	:	
EXPANDABLE MENUS	:	

This decision is in response to applicant's renewed petition under 37 CFR 1.181, filed in the United States Patent and Trademark Office on 15 January 2008.

BACKGROUND

On 16 November 2007, the Office mailed Decision On Petition Under 37 CFR 1.181, dismissing applicant's petition without prejudice.

On 15 January 2008, applicants filed this renewed petition, accompanied by a new declaration of the inventor.

DISCUSSION

The showing required to establish nonreceipt of an Office communication is set forth in the notice entitled *Withdrawing the Holding of Abandonment When Office Actions Are Not Received*, 1156 O.G. 53 (Nov. 16, 1993). The showing must include: (1) a statement by the practitioner that the Office action was not received by the practitioner; (2) a statement attesting that a search of the file jacket and docket records indicates that the Office action was not received; and (3) a copy of the docket record where the non-received Office action would have been entered had it been received (the docket record must also be referenced in practitioner's statement).

Items (1) and (2) were previously satisfied. Practitioner states that the Notification of Missing Requirement was not received and indicates that a search of the file did not locate the notification. The docket clerk states that a search of the docket records indicates that the Notification of Missing Requirements was not received.

Item (3) has now been satisfied.

The 15 January 2008 declaration of the inventor complies with 37 CFR 1.497(a)-(b).

CONCLUSION

For the reasons set forth above, the petition under 37 CFR 1.181 is **GRANTED**.

The Notification of Abandonment (Form PCT/DO/EO/909) mailed 24 August 2007 is **VACATED**.

This application is being returned to the National Phase Processing Branch of the Office of Patent Application Processing for further action consistent with this decision.

/Erin P. Thomson/

Erin P. Thomson
Attorney Advisor
PCT Legal Administration

Telephone: 571-272-3292
Facsimile: 571-273-0459

UNITED STATES PATENT AND TRADEMARK OFFICE

Commissioner for Patents
United States Patent and Trademark Office
P.O. Box 1450
Alexandria, VA 22313-1450
www.uspto.gov

13 JUL 2006

HAMILTON, BROOK, SMITH & REYNOLDS, P.C.
530 VIRGINIA ROAD
P.O. BOX 9133
CONCORD MA 01742-9133

In re Application of	:	
PAPENFUHS et al.	:	DECISION ON
Application No.: 10/519,133	:	
Int'l Filing Date: 1 July 2003	:	REQUEST FOR
Priority Date: 4 July 2002		
Attorney's Docket No.: 3669 1001-000	:	
For: CROSS-LINKED POLYVINYL ACETALS	:	CORRECTED FILING RECEIPT

This is in response to applicant's "Request for Corrected Filing Receipt" filed in the United States Patent and Trademark Office (USPTO) on 29 July 2005, requesting a corrected filing receipt for the above referenced application.

On 08 July 2005, a "Notification of Acceptance" (Form PCT/DO/EO/903) was mailed to applicant, incorrectly indicated that the date of receipt of 35 U.S.C. 371(c)(1), (c)(2) and (c)(4) requirements was 22 December 2004 and the date of completion of all 35 U.S.C. 371 requirements was 4 January 2005.

On 29 July 2005, applicants filed the instant request for a corrected filing receipt. A review of the application file indicates that the date of receipt of 35 U.S.C. 371(c)(1), (c)(2) and (c)(4) requirements occurred on 10 March 2005 with the submission of the executed declaration and the date of completion of all 35 U.S.C. 371 requirements was 10 March 2005.

Accordingly, the Notification of Acceptance and filing receipt mailed on 08 July 2005 is hereby **VACATED**.

CONCLUSION

Applicant's request for a corrected filing receipt is **GRANTED**. The "Notification of Acceptance" (Form PCT/DO/EO/903) mailed 08 July 2005 is hereby **VACATED**.

The application is being forwarded for the National Stage Processing Branch of the Office of PCT Operations for issuance of a new Notification of Acceptance and corrected filing receipt, indicating that the date of receipt of 35 U.S.C. 371(c)(1), (c)(2) and (c)(4) requirements was 10 March 2005 and the date of completion of all 35 U.S.C. 371 requirements was 10 March 2005.

Cynthia M. Kratz
Attorney Advisor
PCT Legal Office

Telephone: 571-272-3286

#6

UNITED STATES PATENT AND TRADEMARK OFFICE

18 JAN 2006

Commissioner for Patents
United States Patent and Trademark Office
P.O. Box 1450
Alexandria, VA 22313-1450
www.uspto.gov

Jeffrey M. Greenman
BAYER PHARMACEUTICALS CORPORATION
400 Morgan Lane
West Haven, Connecticut 06516

In re Application of:	:	
HENDRIX, Martin, et al.	:	DECISION REGARDING
U.S. Application No.: 10/519,134	:	SUBMISSION UNDER
PCT No.: PCT/EP03/06662	:	37 CFR 1.42
International Filing Date: 25 June 2003	:	
Priority Date: 08 July 2002	:	
Attorney's Docket No.: Le A 36 080	:	
For: HETERO-CYCLICALLY	:	
SUBSTITUTED	:	
IMADAZOTRIAZINES	:	

This communication is issued in response to applicants' submission on 07 October 2005 of a declaration executed on behalf of a deceased inventor, which has been treated as a submission under 37 CFR.1.42.

BACKGROUND

On 25 June 2003, applicants filed international application PCT/EP03/06662 that claimed a priority date of 08 July 2002 and designated the United States. On 15 January 2004, a copy of the international application was communicated to the United States Patent and Trademark Office (USPTO) by the International Bureau (IB). The deadline for submission of the basic national fee was thirty months from the priority date, i.e., 08 January 2005.

On 22 December 2004, applicants filed a Transmittal Letter for entry into the national stage in the United States accompanied by, among other materials, an English translation of the international application and payment of the basic national fee.

On 05 July 2005, the United States Designated/Elected Office (DO/EO/US) mailed a Notification Of Missing Requirements (Form PCT/DO/EO/905) indicating that an oath or declaration acceptable under 37 CFR 1.497, the surcharge for filing the oath or declaration late, and sequence listing materials were required.

On 07 October 2005, applicants filed a response to the Notification Of Missing Requirements (with required one-month extension fee) that included payment of the required surcharge, a declaration executed by the surviving inventors and on behalf of deceased inventor Ulrich NIEWOHNER by his heiress, Maria NIEWOHNER, and a statement that the present

application does not include the disclosure of an amino acid or nucleotide sequence listing. The declaration is considered below as a submission under 37 CFR 1.42 and 1.497.

DISCUSSION

37 CFR 1.42 states in part:

> In case of the death of the inventor, the legal representative (executor, administrator, etc.) of the deceased inventor may make the necessary oath or declaration, and apply for and obtain the patent.

37 CFR 1.497(b)(2) states:

> If the person making the oath or declaration or any supplemental oath or declaration is not the inventor (§§ 1.42, 1.43, or 1.47) the oath or declaration shall state the relationship of the person to the inventor, and, upon information and belief, the facts which the inventor would have been required to state. If the person is the legal representative of a deceased inventor, the oath or declaration shall also state that the person is a legal representative and the citizenship, residence, and mailing address of the legal representative.

Section 409.01(a) of the Manual of Patent Examining Procedure (MPEP) states that the application can also be executed by all of the heirs of the deceased inventor, where no legal representative has been appointed or is required to be appointed by law.

Pursuant to 37 CFR 1.497(b)(2), the declaration must provide the citizenship, mailing address, and residence information for **both** the deceased inventor and the legal representative or heir. Here, the filed declaration contains the information required under 37 CFR 1.497(b)(2), including the citizenship, address, and residence information for both the deceased inventor and his heiress. Applicants have also provided a statement, with supporting documentation, confirming that the listed heiress is the sole heir of the deceased inventor.

The submission of the declaration executed by heiress of the deceased inventor is hereby construed as an indication that no legal representative of the deceased's estate has been appointed and that no legal representative is required by the applicable law to be appointed. If this interpretation is incorrect, applicant is required to promptly notify the Office of such and to submit a declaration properly executed by the legal representative of the deceased inventor in response to this decision.

Based on the above, if otherwise acceptable under 37 CFR 1.497, the declaration filed 07 October 2005 would be acceptable under 37 CFR 1.42 with respect to deceased inventor Ulrich NIEWOHNER. However, a review of the declaration filed 07 October 2005 reveals a defect with respect to the name of one of the surviving inventors. Specifically, the name of the ninth inventor is identified as Dagmar SCHAUSS on the international application (and on the Application Data Sheet filed 22 December 2004); this inventor is identified as Dagmar

KARTHAUS on the declaration filed 07 October 2005. The declaration is therefore defective for failure to properly identify all of the inventors of record herein.

Section 605.04(b) of the Manual Of Patent Examining Procedure ("MPEP") states that:

> Except for correction of a typographical or transliteration error in the spelling of an inventor's name, a request to have the name changed from the typewritten version to the signed version or any other corrections in the name of the inventor(s) will not be entertained, unless accompanied by a petition under 35 U.S.C. 1.182 together with an appropriate petition fee.

In this case, the difference between the ninth inventor's name in the published international application (SCHAUSS) and the declaration (KARTHAUS) appears to be more than a mere typographical error or a phonetic misspelling of the applicant's name. Accordingly, a petition under 37 CFR 1.182 to correct the name of the ninth inventor is required before the present declaration can be accepted under 37 CFR 1.497 and 1.42. For such a petition to be grantable, MPEP § 605.04(c) states that "the petition must include an appropriate petition fee and an affidavit signed by the inventor setting forth both names and the procedure whereby the change of name was effected, or a certified copy of the court order."

CONCLUSION

The 07 October 2005 submission under 37 CFR 1.42 and 1.497 is **REJECTED** without prejudice.

Applicants have **TWO (2) MONTHS** from the mail date this communication to submit a proper response under 37 CFR 1.42 and 1.497. Failure to file a proper and timely response will result in abandonment. Extensions of time are available under 37 CFR 1.136(a).

A proper response must include a petition correcting the name of record for the ninth inventor to the name set forth on the declaration, as discussed above.

Please direct further correspondence with respect to this matter to Mail Stop PCT, Commissioner for Patents, Office of PCT Legal Administration, P.O. Box 1450, Alexandria, Virginia 22313-1450, with the contents of the letter marked to the attention of the Office of PCT Legal Administration.

Richard M. Ross
PCT Petitions Attorney
Office Of PCT Legal Administration
Telephone: (571) 272-3296
Facsimile: (571) 273-0459

06 APR 2006

UNITED STATES PATENT AND TRADEMARK OFFICE

Commissioner for Patents
United States Patent and Trademark Office
P.O. Box 1450
Alexandria, VA 22313-1450
www.uspto.gov

Jeffrey M. Greenman
BAYER PHARMACEUTICALS CORPORATION
400 Morgan Lane
West Haven, Connecticut 06516

In re Application of: HENDRIX, Martin, et al. U.S. Application No.: 10/519,134 PCT No.: PCT/EP03/06662 Int. Filing Date: 25 June 2003 Priority Date: 08 July 2002 Attorney's Docket No.: Le A 36 080 For: HETERO-CYCLICALLY SUBSTITUTED IMADAZOTRIAZINES	DECISION ON RENEWED SUBMISSION UNDER 37 CFR 1.42 AND PETITION UNDER 37 CFR 1.182 (INVENTOR'S NAME)

This decision is issued in response to the "Reply To Decision Regarding Submission under 37 CFR 1.42" and the "Petition To Change Name Of Record Of Inventor Under 37 CFR 1.182" filed 20 March 2006. Deposit Account No. 13-3372 will be charged the $400 petition fee required for the petition under 37 CFR 1.182.

BACKGROUND

The background for this application was set forth in detail in the decision mailed by this Office on 18 January 2004. In that decision, the declaration filed by applicants on 07 October 2005 was found defective for failure to satisfy the requirements of 37 CFR 1.42 and 37 CFR 1.497 in that it did not properly identify all the inventors of record. Specifically, the ninth inventor in the declaration was identified as Dagmar KARTHAUS; this inventor was identified as Dagmar SCHAUSS on the published international application.

On 20 March 2006, applicants filed the "Reply To Decision Regarding Submission under 37 CFR 1.42" and the "Petition To Change Name Of Record Of Inventor Under 37 CFR 1.182" considered herein.

DISCUSSION

1. Petition Under 37 CFR 1.182

Applicants request that the name of the inventor identified in the international application as Dagmar SCHAUSS be corrected to Dagmar KARHAUS, as listed on the declaration filed 07 October 2005. Applicants have submitted the required petition fee, and the petition includes a

statement from the inventor explaining that the inventor's name was changed by marriage. These materials satisfy the requirements for a grantable petition to correct this inventor's name of record from Dagmar SCHAUSS to Dagmar KARHAUS.

2. **Renewed Submission Under 37 CFR 1.42**

As noted in the previous decision, absent the defect in inventor Dagmar SCHAUSS' name, the declaration filed by applicants on 07 October 2005 was sufficient with respect to deceased inventor Ulrich NIEWOHNER. Accordingly, based on the correction of the inventor's name discussed above, the declaration may now be accepted under 37 CFR 1.42.

As also noted in the previous decision, the submission of a declaration executed by the heiress of the deceased inventor is hereby construed as an indication that no legal representative of the deceased's estate has been appointed and that no legal representative is required by the applicable law to be appointed. If this interpretation is incorrect, applicant is required to promptly notify this Office of such and to submit a declaration properly executed by the legal representative of the deceased inventor in response to this decision.

CONCLUSION

Applicants' petition under 37 CFR 1.182 to change an inventor's name is **GRANTED**. The name of record for the inventor identified on the international application as Dagmar SCHAUSS is corrected to Dagmar KARTHAUS.

Applicants' request for status under 37 CFR 1.42 with respect to deceased inventor Ulrich NIEWOHNER is **GRANTED**.

This application is being returned to the National Stage Processing Branch of the Office Of PCT Operations for further processing in accordance with this decision. The date under 35 U.S.C. 371(c)(1), (c)(2), and (c)(4) is 07 October 2005.

Richard M. Ross
Attorney Advisor
Office of PCT Legal Administration
Telephone: (571) 272-3296
Facsimile: (571) 273-0459

SPE RESPONSE FOR CERTIFICATE OF CORRECTION

Paper No.: _____

DATE : Oct. 23, 2008

TO SPE OF : ART UNIT 1792

SUBJECT : Request for Certificate of Correction for Appl. No.:/10/519141/7364619

Please respond to this request for a certificate of correction within 7 days.

FOR IFW FILES: Should Reference be added?

Please review the requested changes/corrections as shown in the **COCIN** document(s) in the IFW application image. No new matter should be introduced, nor should the scope or meaning of the claims be changed.

Please complete the response (see below) and forward the completed response to scanning using document code **COCX**.

FOR PAPER FILES:

Please review the requested changes/corrections as shown in the attached certificate of correction. Please complete this form (see below) and forward it with the file to:

Certificates of Correction Branch (CofC)
South Tower - 9A22
Palm Location 7580

Magdalene Talley
Certificates of Correction Branch
703-308-9390 ext. 116

Thank You For Your Assistance

The request for issuing the above-identified correction(s) is hereby:
Note your decision on the appropriate box.

- ☒ **Approved** — **All** changes apply.
- ☐ **Approved in Part** — Specify below which changes **do not** apply.
- ☐ **Denied** — State the reasons for denial below.

Comments: _____

PTO/SB/44 (07-07)
Approved for use through 07/31/2007. OMB 0651-0033
U.S. Patent and Trademark Office; U.S. DEPARTMENT OF COMMERCE
Under the Paperwork Reduction Act of 1995, no persons are required to respond to a collection of information unless it displays a valid OMB control number.
(Also Form PTO-1050)

UNITED STATES PATENT AND TRADEMARK OFFICE
CERTIFICATE OF CORRECTION

PATENT NO.	:	7,364,619
APPLICATION NO.	:	10/519,141
ISSUE DATE	:	April 29, 2008
INVENTOR(S)	:	Robert DWILINSKI et al.

It is certified that an error appears or errors appear in the above-identified patent and that said Letters Patent is hereby corrected as shown below:

On the cover page, in section (56) Reference Cited:

Please add under the U.S. Patent Documents:

7,160,388 B2	01/2007	Dwiliński et al.
6,270,569 B1	08/2001	Shibata et al.

MAILING ADDRESS OF SENDER (Please do not use customer number below):
Barry E. Bretschneider
MORRISON & FOERSTER LLP
1650 Tysons Blvd, Suite 400
McLean, Virginia 22102

va-242952

UNITED STATES PATENT AND TRADEMARK OFFICE

UNITED STATES DEPARTMENT OF COMMERCE
United States Patent and Trademark Office
Address: COMMISSIONER FOR PATENTS
P.O. Box 1450
Alexandria, Virginia 22313-1450
www.uspto.gov

APPLICATION NO.	FILING DATE	FIRST NAMED INVENTOR	ATTORNEY DOCKET NO.	CONFIRMATION NO.
10/519,146	08/31/2005	Konrad Wissenbach	31583-212399 RK	1368

26694 7590 03/04/2009
VENABLE LLP
P.O. BOX 34385
WASHINGTON, DC 20043-9998

EXAMINER
HEINRICH, SAMUEL M

ART UNIT	PAPER NUMBER
3742	

MAIL DATE	DELIVERY MODE
03/04/2009	PAPER

Please find below and/or attached an Office communication concerning this application or proceeding.

The time period for reply, if any, is set in the attached communication.

In re application of:
KONRAD WISSENBACH et al

DECISION ON PETITION

TO ACCEPT COLOR IMAGES

Serial No.10/519,146
Filed: August 31, 2005
For: METHOD FOR SMOOTHING AND POLISHING SURFACES BY TREATING THEM WITH ENERGETIC RADIATION

A Petition Under 37 CFR 1.84(a)(2) for Submission of Color Drawings was submitted in connection with the above-identified application on August 14, 2008. The petition was accompanied by: (1) the requisite three sets of Drawings; (2) the requisite petition fee; and (3) a showing that color drawings are the only practical medium by which to disclose the subject matter sought to be patented in the patent application. Accordingly, the color drawings are acceptable.

The petition is **GRANTED**.

/TU B HOANG/
Supervisory Patent Examiner, Art Unit 3742

UNITED STATES PATENT AND TRADEMARK OFFICE

UNITED STATES DEPARTMENT OF COMMERCE
United States Patent and Trademark Office
Address: COMMISSIONER FOR PATENTS
P.O. Box 1450
Alexandria, Virginia 22313-1450
www.uspto.gov

VENABLE LLP
P.O. BOX 34385
WASHINGTON, DC 20043-9998

Mail Date: 04/21/2010

Applicant	: Konrad Wissenbach	: DECISION ON REQUEST FOR
Patent Number	: 7592563	: RECALCULATION of PATENT
Issue Date	: 09/22/2009	: TERM ADJUSTMENT IN VIEW
Appliction No	: 10/519,146	: OF WYETH AND NOTICE OF INTENT TO
Filed	: 08/31/2005	: ISSUE CERTIFICATE OF CORRECTION
		:

The Request for Recalculation is **GRANTED** to the extent indicated.

The patent term adjustment has been determined to be **995** days. The USPTO will *sua sponte* issue a certificate of correction reflecting the amount of PTA days determined by the recalculation.

Prior to the issuance of the certificate of correction, the USPTO will afford patentee an opportunity to be heard and request reconsideration. Accordingly, patentee has **one month or thirty (30) days**, whichever is longer, to file a request for reconsideration of this patent term adjustment calculation. See 35 U.S.C. 154(b)(3)(B)(ii) and 37 CFR 1.322(a)(4). No extensions of time will be granted under 37 CFR 1.136.

Patentee should use document code PET.OP if electronically filing a request for reconsideration of this patent term adjustment calculation. The patentee must also include the information required by 37 CFR 1.705(b)(2) and the fee required by 37 CFR 1.18(e). If patentee does not file a timely request for reconsideration of this patent term adjustment calculation including the information required by 37 CFR 1.705(b)(2) and the fee required by 37 CFR 1.18(e), the USPTO will issue a certificate of correction reflecting the PTA determination noted above.

Patentee should be aware that in order to preserve the right to review in the United States District Court for the District of Columbia of the USPTO patent term adjustment determination, patentee must ensure that he or she also take the steps required under 35 U.S.C. 154(b)(4)(A) in a timely manner. Nothing in the request for recalculation should be construed as providing an alternative time frame for commencing a civil action under 35 U.S.C. 154(b)(4)(A).

Any questions concerning this decision should be directed to the Office of Patent Legal Administration at 571-272-7702.

UNITED STATES PATENT AND TRADEMARK OFFICE

Commissioner for Patents
United States Patent and Trademark Office
P. O. Box 1450
Alexandria, VA 22313-1450
www. uspto. gov

HUSCH BLACKWELL SANDERS, LLP
WELSH & KATZ
120 S RIVERSIDE PLAZA, 22ND FLOOR
CHICAGO, IL 60606

COPY MAILED

AUG 0 6 2008

OFFICE OF PETITIONS

In re Application of :
Masatomo Shibata et al :
Application No. 10/519,152 :
Filed: August 10, 2005 :
Attorney Docket No. PHCF-03037US :

ON PETITION

This is a decision on the petition under 37 CFR 1.137(b), filed April 28, 2008 to revive the above-identified application.

The petition is **GRANTED.**

The application became abandoned for failure to reply in a timely manner to the Restriction Requirement mailed September 11, 2007 which set a shortened statutory period for reply of one (1) month or thirty (30) days (whichever is later). No extensions of time under the provisions of 37 CFR 1.136(a) were obtained. Accordingly, the application became abandoned on October 12, 2007.

An extension of time under 37 CFR 1.136 must be filed prior to the expiration of the maximum extendable period for reply. See In re Application of S., 8 USPQ2d 1630, 1631 (Comm'r Pats. 1988). Accordingly, since the $1050 extension of time submitted with the petition on April 28, 2008 was subsequent to the maximum extendable period for reply, this fee is unnecessary and will be credit to petitioner's credit card.

Telephone inquiries concerning this decision should be directed to Irvin Dingle at (571) 272-3210. This matter is being referred to Technology Center AU 2812 for further processing.

Irvin Dingle
Petitions Examiner
Office of Petitions

UNITED STATES PATENT AND TRADEMARK OFFICE

UNITED STATES DEPARTMENT OF COMMERCE
United States Patent and Trademark Office
Address: COMMISSIONER FOR PATENTS
P.O. Box 1450
Alexandria, Virginia 22313-1450
www.uspto.gov

APPLICATION NUMBER	FILING OR 371(C) DATE	FIRST NAMED APPLICANT	ATTY. DOCKET NO./TITLE
10/519,152	08/10/2005	Masatomo Shibata	PHCF-03037US

CONFIRMATION NO. 5477

POA ACCEPTANCE LETTER

24628
Husch Blackwell Sanders, LLP
Welsh & Katz
120 S RIVERSIDE PLAZA
22ND FLOOR
CHICAGO, IL 60606

OC000000031398601

Date Mailed: 08/06/2008

NOTICE OF ACCEPTANCE OF POWER OF ATTORNEY

This is in response to the Power of Attorney filed 04/28/2008.

The Power of Attorney in this application is accepted. Correspondence in this application will be mailed to the above address as provided by 37 CFR 1.33.

/idingle/

Office of Data Management, Application Assistance Unit (571) 272-4000, or (571) 272-4200, or 1-888-786-0101

UNITED STATES PATENT AND TRADEMARK OFFICE

UNITED STATES DEPARTMENT OF COMMERCE
United States Patent and Trademark Office
Address: COMMISSIONER FOR PATENTS
P.O. Box 1450
Alexandria, Virginia 22313-1450
www.uspto.gov

APPLICATION NUMBER	FILING OR 371(C) DATE	FIRST NAMED APPLICANT	ATTY. DOCKET NO./TITLE
10/519,152	08/10/2005	Masatomo Shibata	PHCF-03037US

CONFIRMATION NO. 5477

POWER OF ATTORNEY NOTICE

21254
MCGINN INTELLECTUAL PROPERTY LAW GROUP, PLLC
8321 OLD COURTHOUSE ROAD
SUITE 200
VIENNA, VA 22182-3817

OC000000031398565

Date Mailed: 08/06/2008

NOTICE REGARDING CHANGE OF POWER OF ATTORNEY

This is in response to the Power of Attorney filed 04/28/2008.

- The Power of Attorney to you in this application has been revoked by the assignee who has intervened as provided by 37 CFR 3.71. Future correspondence will be mailed to the new address of record(37 CFR 1.33).

/idingle/

Office of Data Management, Application Assistance Unit (571) 272-4000, or (571) 272-4200, or 1-888-786-0101

UNITED STATES PATENT AND TRADEMARK OFFICE

Commissioner for Patents
United States Patent and Trademark Office
P.O. Box 1450
Alexandria, VA 22313-1450
www.uspto.gov

Barnes & Thornburg LLP
P.O. Box 2786
Chicago, IL 60690-2786

COPY MAILED
AUG 13 2008

In re Application of	:	
Masatomo Shibata, et al.	:	
Application No. 10/519,152	:	DECISION ON PETITION
Filed: August 10, 2005	:	TO WITHDRAW
Attorney Docket No. PHCF-03037US	:	FROM RECORD
	:	

This is a decision on the Request to Withdraw as attorney or agent under 37 C.F.R. § 1.36(b) or 37 C.F.R. § 10.40 filed April 15, 2008.

The request is **NOT APPROVED**.

A review of the file record indicates that Barnes & Thornburg LLP does not have power of attorney in this patent application nor is there any statement or evidence of record of employment in or otherwise being engaged in the proceedings in this patent application. Accordingly, the request to withdraw under 37 C.F.R. § 1.36(b) is not applicable.

All future communications from the Office will continue to be directed to the below-listed address until otherwise properly notified by the applicant.

Telephone inquires concerning this decision should be directed to Terri Williams at 571-272-2991.

Terri Williams
Petitions Examiner
Office of Petitions

cc: **Husch Blackwell Sanders, LLP**
Welsh & Katz
120 Riverside Plaza
22nd Floor
Chicago, IL 60606

UNITED STATES PATENT AND TRADEMARK OFFICE

Commissioner for Patents
United States Patent and Trademark Office
P.O. Box 1450
Alexandria, VA 22313-1450
www.uspto.gov

SCULLY SCOTT MURPHY & PRESSER, PC
400 GARDEN CITY PLAZA
SUITE 300
GARDEN CITY NY 11530

COPY MAILED

AUG 3 1 2009

OFFICE OF PETITIONS

In re Application of	:	
Masatomo SHIBATA et al.	:	
Application No. 10/519,152	:	DECISION ON PETITION
Filed: August 10, 2005	:	
Attorney Docket No. 23165	:	

This is a decision on the petition under the unintentional provisions of 37 CFR 1.137(b), filed July 15, 2009, to revive the above-identified application.

The petition is **GRANTED**.

The application became abandoned for failure to reply in a timely manner to the non-final Office action mailed, September 11, 2008 which set a shortened statutory period for reply of three (3) month. No extensions of time under the provisions of 37 CFR 1.136(a) were obtained. Accordingly, the application became abandoned on December 12, 2008.

The petition satisfies the conditions for revival pursuant to the provisions of 37 CFR 1.137(b) in that (1) the reply in the form of an amendment (2) the petition fee of $1,620.00 and (3) the required statement of unintentional delay have been received. Accordingly, the reply to the restriction requirement of September 11, 2008 has been accepted as having been unintentionally delayed.

Telephone inquiries concerning this decision should be directed to the undersigned at (571) 272-4231.

The application is being referred to the Technology Center AU 2811 for appropriate action on the concurrently filed amendment.

Michelle R. Eason

Michelle R. Eason
Paralegal Specialist
Office of Petitions

17 MAR 2006

United States Patent and Trademark Office

#5

Commissioner for Patents
United States Patent and Trademark Office
P.O. Box 1450
Alexandria, VA 22313-1450
www.uspto.gov

Lowe Hauptman Gilman and Berner, LLP
1700 Diagonal Road
Suite 300/310
Alexandria, VA 22314

In re Application of ABOU CHACRA-VERNET et al. Application No.: 10/519,166 PCT No.: PCT/FR03/01933 Int. Filing Date: 24 June 2003 Priority Date: 25 June 2002 Attorney Docket No.: 1169-032 For: Solid Pharmaceutical Composition Containing A Lipophilic Active Principle And Preparation Meth...	DECISION ON PETITION

This is in response to the "Reply To Notice To File Missing Parts" filed on 26 October 2005, which is being treated as a petition under 37 CFR 1.47(a).

BACKGROUND

This international application was filed on 24 June 2003, claimed an earlier priority date of 25 June 2002, and designated the U.S. The International Bureau transmitted a copy of the published international application to the USPTO on 31 December 2003. The 30 month time period for paying the basic national fee in the United States expired at midnight on 25 December 2004. Applicants filed *inter alia* the basic national fee on 23 December 2004.

On 08 June 2005, a Notification of Missing Requirements (Form PCT/DO/EO/905) was mailed to applicants, requiring the submission of an executed oath or declaration in compliance with 37 CFR 1.497(a) and (b) along with the $65.00 surcharge.

DISCUSSION

A petition under 37 CFR 1.47(a) must be accompanied by (1) the fee under 37 CFR 1.17(h), (2) factual proof that the missing joint inventor refuses to execute the application or cannot be reached after diligent effort, (3) a statement of the last known address of the missing inventor, and (4) an oath or declaration by each 37 CFR 1.47(a) applicant on his or her own behalf and on behalf of the non-signing joint inventor.

Regarding requirement (1), the $200.00 petition fee is being charged to counsel's Deposit Account No. 07-1337, as authorized by the instant petition.

Regarding requirement (2), petitioner urges that the absence on the declaration of the signature of joint inventor Dominique Toselli be excused because he allegedly "refused to execute the declaration." Counsel's attention is respectfully drawn to MPEP 409.03(d), which states in part:

> A refusal by an inventor to sign an oath or declaration when the inventor has not been presented with the application papers does not itself suggest that the inventor is refusing to join the application unless it is clear that the inventor understands

exactly what he or she is being asked to sign and refuses to accept the application papers. A copy of the application papers should be sent to the last known address of the nonsigning inventor, or, if the nonsigning inventor is represented by counsel, to the address of the nonsigning inventor's attorney. The fact that an application may contain proprietary information does not relieve the 37 CFR 1.47 applicant of the responsibility to present the application papers to the inventor if the inventor is willing to receive the papers in order to sign the oath or declaration. It is noted that the inventor may obtain a complete copy of the application, unless the inventor has assigned his or her interest in the application, and the assignee has requested that the inventor not be permitted access. See MPEP § 106. It is reasonable to require that the inventor be presented with the application papers before a petition under 37 CFR 1.47 is granted since such a procedure ensures that the inventor is apprised of the application to which the oath or declaration is directed. In re Gray, 115 USPQ 80 (Comm'r Pat. 1956).

Where a refusal of the inventor to sign the application papers is alleged, the circumstances of the presentation of the application papers and of the refusal must be specified in a statement of facts by the person who presented the inventor with the application papers and/or to whom the refusal was made. Statements by a party not present when an oral refusal is made will not be accepted. Proof that a bona fide attempt was made to present a copy of the application papers (specification, including claims, drawings, and oath or declaration) to the nonsigning inventor for signature, but the inventor refused to accept delivery of the papers or expressly stated that the application papers should not be sent, may be sufficient. When there is an express oral refusal, that fact along with the time and place of the refusal must be stated in the statement of facts. When there is an express written refusal, a copy of the document evidencing that refusal must be made part of the statement of facts. The document may be redacted to remove material not related to the inventor's reasons for refusal. When it is concluded by the 37 CFR 1.47 applicant that a nonsigning inventor's conduct constitutes a refusal, all facts upon which that conclusion is based should be stated in the statement of facts in support of the petition or directly in the petition. If there is documentary evidence to support facts alleged in the petition or in any statement of facts, such evidence should be submitted. Whenever a nonsigning inventor gives a reason for refusing to sign the application oath or declaration, that reason should be stated in the petition

The petition refers to an accompanying "Statement of Facts" signed by Beatrice Ores which describes "steps [which] were taken to obtain the signature of Dominique TOSELLI." Taken together with the accompanying annexes (specifically, the copies of French language letters to Mr. Toselli and accompanying English translations), the evidence submitted tends to show that the declaration of inventorship was sent to Mr. Toselli for signature at a certain address in Toulouse, France. However, the evidence does not demonstrate that a complete copy of the application papers was presented to him. In the absence of a showing that Mr. Toselli was presented with a complete copy of the application papers, it would not be appropriate to conclude that he has refused to execute the declaration within the meaning of 37 CFR 1.47.

Regarding requirement (3), the petition does not include an affirmative, explicit statement of the last known address of Dominique Toselli. Accordingly, requirement (3) has not been satisfied.

Regarding requirement (4), the petition is accompanied by a declaration document signed by joint inventors Abou Chacra-Vernet, Zakarian, Gimet and Laruelle on behalf of themselves and non-signing joint inventor Dominique Toselli. This declaration satisfies requirement (4).

DECISION

The petition under 37 CFR 1.47(a) is **DISMISSED**, without prejudice.

If reconsideration on the merits of this petition is desired, a proper response must be filed within **TWO (2) MONTHS** from the mail date of this decision. Any reconsideration request should include a cover letter entitled "Renewed Petition Under 37 CFR 1.47." No additional petition fee is required. Extensions of time may be obtained under 37 CFR 1.136(a). Failure to timely file a proper response will result in **ABANDONMENT**.

Please direct any further correspondence with respect to this matter to the Assistant Commissioner for Patents, Mail Stop PCT, P.O. Box 1450, Alexandria, VA 22313-1450, and address the contents of the letter to the attention of the PCT Legal Office.

Leonard Smith
PCT Legal Examiner
PCT Legal Office

George M. Dombroske
PCT Legal Examiner
PCT Legal Office
Tel: (571) 272-3283
Fax: (571) 273-0459

25 AUG 2006

United States Patent and Trademark Office

Commissioner for Patents
United States Patent and Trademark Office
P.O. Box 1450
Alexandria, VA 22313-1450
www.uspto.gov

MERCHANT & GOULD, L.L.C.
P.O. BOX 2903
MINNEAPOLIS, MN 55402-0903

In re Application of	:	
ABOU CHACRA-VERNET et al.	:	
Application No.: 10/519,166	:	DECISION
PCT No.: PCT/FR03/01933	:	
Int. Filing Date: 24 June 2003	:	ON
Priority Date: 25 June 2002	:	
Attorney Docket No.: 1169-032	:	PETITION
For: Solid Pharmaceutical Composition Containing A Lipophilic Active Principle And Preparation Meth...	:	

This is in response to the renewed petition under 37 CFR 1.47(a) filed on 19 June 2006.

DISCUSSION

In a decision mailed on 17 March 2006, the petition under 37 CFR 1.47(a) filed on 26 October 2005 was dismissed without prejudice because

> Regarding requirement (2), ... The petition refers to an accompanying "Statement of Facts" signed by Beatrice Ores which describes "steps [which] were taken to obtain the signature of Dominique TOSELLI." Taken together with the accompanying annexes (specifically, the copies of French language letters to Mr. Toselli and accompanying English translations), the evidence submitted tends to show that the declaration of inventorship was sent to Mr. Toselli for signature at a certain address in Toulouse, France. However, the evidence does not demonstrate that a complete copy of the application papers was presented to him. In the absence of a showing that Mr. Toselli was presented with a complete copy of the application papers, it would not be appropriate to conclude that he has refused to execute the declaration within the meaning of 37 CFR 1.47.
>
> Regarding requirement (3), the petition does not include an affirmative, explicit statement of the last known address of Dominique Toselli. Accordingly, requirement (3) has not been satisfied.

The instant renewed petition includes an explicit statement of Mr. Toselli's last known address, thereby satisfying requirement (3).

With respect to requirement (2), petitioner refers to an attached letter from Beatrice Ores, and argues that "a 'complete copy' of the application was effectively presented to Mr. Toselli for execution." Review of the letter from Beatrice Ores suggests that counsel has not yet followed the formal step of presenting Mr. Toselli with a complete copy of the application; instead, counsel appears to state that "this is not necessary" because "he was able to identify the invention concerned" without a complete copy of the application papers being presented to him. Whether or not "it is beyond clear that Mr. Toselli knew the subject matter and content of the present application," it has not been established that he knew all of the specifics of what subject matter

was actually incorporated into the patent application he has been asked to execute. As such, it would not be appropriate to conclude that requirement (2) has been satisfied at this time.

DECISION

The petition under 37 CFR 1.47(a) is **DISMISSED**, without prejudice.

If reconsideration on the merits of this petition is desired, a proper response must be filed within **TWO (2) MONTHS** from the mail date of this decision. Any reconsideration request should include a cover letter entitled "Renewed Petition Under 37 CFR 1.47." No additional petition fee is required. Extensions of time may be obtained under 37 CFR 1.136(a). Failure to timely file a proper response will result in **ABANDONMENT**.

Please direct any further correspondence with respect to this matter to the Assistant Commissioner for Patents, Mail Stop PCT, P.O. Box 1450, Alexandria, VA 22313-1450, and address the contents of the letter to the attention of the PCT Legal Office.

Leonard Smith
PCT Legal Examiner
Office of PCT Legal Administration

George M. Dombroske
PCT Legal Examiner
Office of PCT Legal Administration
Tel: (571) 272-3283
Fax: (571) 273-0459

United States Patent and Trademark Office

12 FEB 2007

Commissioner for Patents
United States Patent and Trademark Office
P.O. Box 1450
Alexandria, VA 22313-1450
www.uspto.gov

#9

MERCHANT & GOULD, L.L.C.
P.O. BOX 2903
MINNEAPOLIS, MN 55402-0903

In re Application of	:	
ABOU CHACRA-VERNET et al.	:	
Application No.: 10/519,166	:	DECISION
PCT No.: PCT/FR03/01933	:	
Int. Filing Date: 24 June 2003	:	ON
Priority Date: 25 June 2002	:	
Attorney Docket No.: 1169-032	:	PETITION
For: Solid Pharmaceutical Composition Containing A Lipophilic Active Principle And Preparation Meth...	:	

This is in response to the renewed petition under 37 CFR 1.47(a) filed on 27 November 2006.

DISCUSSION

In a decision mailed on 25 August 2006, the petition under 37 CFR 1.47(a) filed on 19 June 2006 was dismissed without prejudice because

> With respect to requirement (2), petitioner refers to an attached letter from Beatrice Ores, and argues that "a 'complete copy' of the application was effectively presented to Mr. Toselli for execution." Review of the letter from Beatrice Ores suggests that counsel has not yet followed the formal step of presenting Mr. Toselli with a complete copy of the application; instead, counsel appears to state that "this is not necessary" because "he was able to identify the invention concerned" without a complete copy of the application papers being presented to him. Whether or not "it is beyond clear that Mr. Toselli knew the subject matter and content of the present application," it has not been established that he knew all of the specifics of what subject matter was actually incorporated into the patent application he has been asked to execute. As such, it would not be appropriate to conclude that requirement (2) has been satisfied at this time.

In response, petitioner has provided a "Statement of Facts" signed by Sophie Goulard on 06 November 2006, indicating that

> The declaration and the Assignment have been re-sent to Mr. Dominique TOSELLI on October 3, 2006 by our Firm (copy of the letter and its English translation enclosed as annexes A and A'). A copy of the International publication of the above mentioned PCT Application and a full copy of the US text as filed were attached to said forms. This registered letter and its annexes have been received by the inventor on October 13, 2006 (Copy of the executed notice of receipt with its English translation enclosed as Annex B).
>
> In our letter, we asked the inventor to execute the Declaration and the Assignment and to send us these documents before October 19, 2006. Our letter remains without follow-up to date.

Petitioner has also attached, *inter alia*, a copy (and English translation) of a letter from Sophie Goulard to Dominique Toselli, dated 03 October 2006, which specifically indicates that copies of both the declaration and of the application papers are being forwarded to Mr. Toselli for his execution. The postal receipt (and translation) have also been made of record. This evidence establishes that Mr. Toselli was presented with a declaration document and a copy of the application papers and, taken in concert with the totality of the evidence of record, establishes that Mr. Toselli's conduct constitutes a "refusal" within the meaning of 37 CFR 1.47(a).

DECISION

The petition under 37 CFR 1.47(a) is **GRANTED**.

It is noted that the petition fee has not yet actually been charged. Therefore, the $200.00 fee is being charged to counsel's Deposit Account No. 07-1337, per the petition filed on 26 October 2005.

As provided in 37 CFR 1.47(a), a notice of the filing of this application will be forwarded to the non-signing inventor at his last known address of record.

A notice of the filing of the application under 37 CFR 1.47(a) will be published in the Official Gazette.

The application is being returned to the International Division for processing as the U.S. National Stage of the above-identified international application. Its date under 35 U.S.C. 371(c)(1), (2) and (4) is **26 October 2005**.

George Dombroske
PCT Legal Examiner
Office of PCT Legal Administration
Tel: (571) 272-3283
Fax: (571) 273-0459

UNITED STATES PATENT AND TRADEMARK OFFICE

Commissioner for Patents
United States Patent and Trademark Office
P.O. Box 1450
Alexandria, VA 22313-1450
www.uspto.gov

O'BRIEN JONES, PLLC (W/FORD MOTOR CO.)
8200 GREENSBORO DRIVE
SUITE 1020A
MCLEAN, VA 22102

COPY MAILED
MAY 27 2008

In re Application of	:	
Vincent JENNINGS, et al	:	
Application No. 10/519,168	:	DECISION ON PETITION
Filed: December 20, 2004	:	
Attorney Docket No. 81044893	:	

This is a decision on the petition under the unintentional provisions of 37 CFR 1.137(b), filed April 28, 2008, to revive the above-identified application.

The petition is **GRANTED**.

The application became abandoned for failure to reply in a timely manner to the non-final Office action mailed, March 2, 2007, which set a shortened statutory period for reply of three (3) months. No extensions of time under the provisions of 37 CFR 1.136(a) were obtained. Accordingly, the application became abandoned on June 3, 2007.

The petition satisfies the requirements of 37 CFR 1.137(b) in that petitioner has supplied (1) the reply in the form of an amendment, (2) the petition fee of $1540; and (3) an adequate statement of unintentional delay.

It is not apparent whether the person signing the statement of unintentional delay was in a position to have firsthand or direct knowledge of the facts and circumstances of the delay at issue. Nevertheless, such statement is being treated as having been made as the result of a reasonable inquiry into the facts and circumstances of such delay. See 37 CFR 10.18(b) and Changes to Patent Practice and Procedure; Final Rule Notice, 62 Fed. Reg. 53131, 53178 (October 10, 1997), 1203 Off. Gaz. Pat. Office 63, 103 (October 21, 1997). In the event that such an inquiry has not been made, petitioner must make such an inquiry. If such inquiry results in the discovery that it is not correct that the entire delay in filing the required reply from the due date for the reply until the filing of a grantable petition pursuant to 37 CFR 1.137(b) was unintentional, petitioner must notify the Office.

Telephone inquiries concerning this decision should be directed to Diane Goodwyn at (571) 272-6735.

This application is being referred to Technology Center AU 3616 for appropriate action by the Examiner in the normal course of business on the reply received April 28, 2008.

Thurman Page
Petitions Examiner
Office of Petitions

RAM Fee History Query

Revenue Accounting and Management

Name/Number: 10519168 Total Records Found: 11

Start Date: Any Date End Date: Any Date

Accounting Date	Sequence Num.	Fee Type	Fee Code	Fee Amount	Mailroom Date	Payment Method
05/01/2008	00017054	4	1806	$180.00	05/01/2008	CC
04/29/2008	00003015	4	1453	$1,540.00	04/28/2008	CC
12/05/2005	00000057	1	1632	-$500.00	12/20/2004	DA 061510
12/05/2005	00000058	1	1642	$400.00	02/01/2005	DA 061510
12/05/2005	00000059	1	1615	$200.00	12/20/2004	DA 061510
03/10/2005	00000016		8021	$40.00	02/21/2005	DA 061510
03/10/2005	00000018		8021	$40.00	02/21/2005	DA 061510
03/10/2005	00000046		8021	$40.00	02/22/2005	DA 061510
01/07/2005	00000270	1	1631	$300.00	12/20/2004	DA 061510
01/07/2005	00000271	1	1632	$500.00	12/20/2004	DA 061510
01/07/2005	00000272	1	1633	$200.00	12/20/2004	DA 061510

UNITED STATES PATENT AND TRADEMARK OFFICE

Commissioner for Patents
United States Patent and Trademark Office
P.O. Box 1450
Alexandria, VA 22313-1450
www.uspto.gov

COPY MAILED

DEC 1 0 2009

OFFICE OF PETITIONS

MERCHANT & GOULD PC
P.O. BOX 2903
MINNEAPOLIS MN 55402-0903

In re Application of :
Herwig :
Application No. 10/519,174 : DECISION
Filed: 20 December, 2004 :
Attorney Docket No. 13027.60USWO :

This is a decision on the petition filed on 17 September, 2009, considered as a petition under 37 C.F.R. §1.181 (no fee) requesting withdrawal of the holding of abandonment in the above-identified application, alternatively pursuant to 37 C.F.R. §1.137(b) for revival of an application abandoned due to unintentional delay .

The petition under 37 C.F.R. §1.181 is **DISMISSED**; the petition under 37 C.F.R. §1.137(b) is **GRANTED**.

> **NOTE:** Petitioner has chosen to bury within the second page of his petition a request to withdraw the holding of abandonment, which he makes not only un-signaled elsewhere and/or in title of his papers but also in a wholly unsupported manner. (*See*: the guidance in the Commentary at MPEP §711.03(c)(I).)
>
> As one registered to practice before the Office, Petitioner is aware that such a practice is inappropriate. (*See*: *inter alia*, 37 C.F.R. §1.4(c).)

As to the Request to Withdraw
the Holding of Abandonment

Petitioners always are directed to the Commentary at MPEP §711.03(c)(I) for guidance as to the proper showing and timeliness requirements for relief under 37 C.F.R. §1.181.

Petitioner appears not to comply with the guidance in the Commentary at MPEP §711.03(c)(I)—as discussed below, Petitioner has failed to satisfy the showing requirements set forth there. Petitioner may find it beneficial to review that material and move step-wise through that guidance in the effort to satisfy the showing requirements (statements and supporting documentation).

As to the Allegations
of Unintentional Delay

The requirements of a grantable petition pursuant to 37 C.F.R. §1.137(b) are the petition and fee therefor, a reply, a proper statement of unintentional delay under the regulation, and, where applicable, a terminal disclaimer and fee.

Petitioners' attentions always are directed to the guidance in the Commentary at MPEP §711.03(c)(II).

BACKGROUND

The record reflects as follows:

Petitioner failed to reply timely and properly to the final Office action mailed on 16 May, 2008, with reply due absent an extension of time on or before 16 August, 2008.

On 16 October, 2008, Petitioner filed a request and fee for extension of time and an amendment after final, which the Examiner refused to enter and Petitioner—as one registered to practice before the Office—knew was not as of right and not a proper reply[1] if it did not *prima facie* place the application in condition for allowance. On 20 November, 2008, the Examiner mailed an Advisory Action.

The application went abandoned by operation of law after midnight 16 October, 2008 (the Notice of Abandonment suggests, erroneously, that the reply was due to the 20 November, 2008, Advisory Action).

The Office mailed the Notice of Abandonment on 17 June, 2009.

On 17 September, 2009, Petitioner filed, *inter alia*, a petition pursuant to 37 C.F.R. §1.181, buried within the second page of his petition, as request to withdraw the holding of abandonment—for which Petitioner fails to provide any of the required showing with supporting documentation—and a petition pursuant to 37 C.F.R. §1.137(b), a reply in the form of a request for continued examination (RCE) and fee with a submission in the form of an amendment pursuant to 37 C.F.R. §1.114, and made the statement of unintentional delay. (Petitioner avers that the failure to include an RCE and fee was an oversight, and so states that "if the Petition to Withdraw the Holding of Abandonment is found insufficient please consider this as a petition [to revive].")

[1] A proper reply is an amendment *prima facie* placing the application in condition for allowance, a Notice of Appeal, or an RCE (with fee and submission under 37 C.F.R. §1.114). (See: MPEP §711.03(c).)

The record (including the petition filed on 17 September, 2009) does not necessitate a finding that the delay between midnight 16 October, 2008 (the date of abandonment), and 17 September, 2009 (the date of the filing of grantable petition), was not unintentional.

Rather, the Patent and Trademark Office is relying in this matter on the duty of candor and good faith of Petitioner/Counsel Gregory A. Sebald (Reg. No. 33,280) when accepting Petitioners' representation that the delay in filing the response was unintentional.[2]

The availability of applications and application papers online to applicants/practitioners who diligently associate their Customer Number with the respective application(s) now provides an applicant/practitioner on-demand information as to events/transactions in an application.

Out of an abundance of caution, Petitioners always are reminded that those registered to practice and all others who make representations before the Office **must** inquire into the underlying facts of representations made to the Office and support averments with the appropriate documentation–since all owe to the Office the continuing duty to disclose.[3]

STATUTES, REGULATIONS AND ANALYSIS

Congress has authorized the Commissioner to "revive an application if the delay is shown to the satisfaction of the Commissioner to have been "unavoidable." 35 U.S.C. §133 (1994).[4]
The regulations at 37 C.F.R. §1.137(a) and (b) set forth the requirements for a Petitioner to revive a previously unavoidably or unintentionally, respectively, abandoned application under this congressional grant of authority.

Unintentional delays are those that do not satisfy the very strict statutory and regulatory requirements of unavoidable delay, and also, by definition, are not intentional.[5]))

With regard to a petition pursuant to 37 C.F.R. §1.181, the guidance in the Commentary at MPEP §711.03(c)(I) provides:

---

[2] See Changes to Patent Practice and Procedure, 62 Fed. Reg. at 53160 and 53178, 1203 Off. Gaz. Pat. Office at 88 and 103 (responses to comments 64 and 109)(applicant obligated under 37 C.F.R. §10.18 to inquire into the underlying facts and circumstances when providing the statement required by 37 C.F.R. §1.137(b) to the Patent and Trademark Office).

[3] See supplement of 17 June, 1999. The Patent and Trademark Office is relying on petitioner's duty of candor and good faith and accepting a statement made by Petitioner. See Changes to Patent Practice and Procedure, 62 Fed. Reg. at 53160 and 53178, 1203 Off. Gaz. Pat. Office at 88 and 103 (responses to comments 64 and 109)(applicant obligated under 37 C.F.R. §10.18 to inquire into the underlying facts and circumstances when providing statements to the Patent and Trademark Office).

[4] 35 U.S.C. §133 provides:

35 U.S.C. §133 Time for prosecuting application.

Upon failure of the applicant to prosecute the application within six months after any action therein, of which notice has been given or mailed to the applicant, or within such shorter time, not less than thirty days, as fixed by the Commissioner in such action, the application shall be regarded as abandoned by the parties thereto, unless it be shown to the satisfaction of the Commissioner that such delay was unavoidable.

[5] Therefore, by example, an unintentional delay in the reply might occur if the reply and transmittal form are to be prepared for shipment by the US Postal Service, but other pressing matters distract one's attention and the mail is not timely deposited for shipment.

***

37 C.F.R. §1.10(c) through §1.10(e) and §1.10(g) set forth procedures for petitioning the Director of the USPTO to accord a filing date to correspondence as of the date of deposit of the correspondence as "Express Mail." A petition to withdraw the holding of abandonment relying upon a timely reply placed in "Express Mail" must include an appropriate petition under 37 C.F.R. §1.10(c), (d), (e), or (g) (see MPEP §513). When a paper is shown to have been mailed to the Office using the "Express Mail" procedures, the paper must be entered in PALM with the "Express Mail" date.

Similarly, applicants may establish that a reply was filed with a postcard receipt that properly identifies the reply and provides *prima facie* evidence that the reply was timely filed. See MPEP §503. For example, if the application has been held abandoned for failure to file a reply to a first Office action, and applicant has a postcard receipt showing that an amendment was timely filed in response to the Office action, then the holding of abandonment should be withdrawn upon the filing of a petition to withdraw the holding of abandonment. When the reply is shown to have been timely filed based on a postcard receipt, the reply must be entered into PALM using the date of receipt of the reply as shown on the post card receipt.

Where a certificate of mailing under 37 C.F.R. §1.8, but not a postcard receipt, is relied upon in a petition to withdraw the holding of abandonment, see 37 C.F.R. 1.8(b) and MPEP §512. As stated in 37 C.F.R. §1.8(b)(3) the statement that attests to the previous timely mailing or transmission of the correspondence must be on a personal knowledge basis, or to the satisfaction of the Director of the USPTO. If the statement attesting to the previous timely mailing is not made by the person who signed the Certificate of Mailing (i.e., there is no personal knowledge basis), then the statement attesting to the previous timely mailing should include evidence that supports the conclusion that the correspondence was actually mailed (e.g., copies of a mailing log establishing that correspondence was mailed for that application). When the correspondence is shown to have been timely filed based on a certificate of mailing, the correspondence is entered into PALM with the actual date of receipt (i.e., the date that the duplicate copy of the papers was filed with the statement under 37 C.F.R. §1.8).

37 C.F.R. §1.8(b) also permits applicant to notify the Office of a previous mailing or transmission of correspondence and submit a statement under 37 C.F.R. §1.8(b)(3) accompanied by a duplicate copy of the correspondence when a reasonable amount of time (e.g., more than one month) has elapsed from the time of mailing or transmitting of the correspondence. Applicant does not have to wait until the application becomes abandoned before notifying the Office of the previous mailing or transmission of the correspondence. Applicant should check the private Patent Application Information

Retrieval (PAIR) system for the status of the correspondence before notifying the Office. See MPEP §512. [6]

***

Allegations as to the Request to
Withdraw the Holding of Abandonment

The guidance in the Commentary at MPEP §711.03(c)(I) specifies the showing required and how it is to be made and supported.

Petitioner appears not to have made the showing required.

As to Allegations of
Unintentional Delay

The requirements of a grantable petition pursuant to 37 C.F.R. §1.137(b) are the petition and fee therefor, a reply, a proper statement of unintentional delay under the regulation, and, where applicable, a terminal disclaimer and fee.

It appears that the requirements under the rule have been satisfied.

CONCLUSION

Accordingly, the petition pursuant to 37 C.F.R. §1.181 is **dismissed**; the petition pursuant to 37 C.F.R. §1.137(b) is **granted**.

The instant application is released to the Technology Center/AU 1643 for further processing in due course.

Petitioner may find it beneficial to view Private PAIR within a fortnight of the instant decision to ensure that the revival has been acknowledged by the TC/AU in response to this decision. It is noted that all inquiries with regard to that change in status need be directed to the TC/AU where that change of status must be effected—that does not occur in the Office of Petitions.

[6] *See*: MPEP §711.03(c) (I)(B).

Telephone inquiries regarding this decision may be directed to the undersigned at (571) 272-3214—it is noted, however, that all practice before the Office is in writing (see: 37 C.F.R. §1.2[7]) and the proper authority for action on any matter in this regard are the statutes (35 U.S.C.), regulations (37 C.F.R.) and the commentary on policy (MPEP). Therefore, no telephone discussion may be controlling or considered authority for Petitioner's action(s).

/John J. Gillon, Jr./
John J. Gillon, Jr.
Senior Attorney
Office of Petitions

[7] The regulations at 37 C.F.R. §1.2 provide:
§1.2 Business to be transacted in writing.
All business with the Patent and Trademark Office should be transacted in writing. The personal attendance of applicants or their attorneys or agents at the Patent and Trademark Office is unnecessary. The action of the Patent and Trademark Office will be based exclusively on the written record in the Office. No attention will be paid to any alleged oral promise, stipulation, or understanding in relation to which there is disagreement or doubt.

UNITED STATES PATENT AND TRADEMARK OFFICE

UNITED STATES DEPARTMENT OF COMMERCE
United States Patent and Trademark Office
Address: COMMISSIONER FOR PATENTS
P.O. Box 1450
Alexandria, Virginia 22313-1450
www.uspto.gov

INDIANAPOLIS OFFICE 27879
BRINKS HOFER GILSON & LIONE
CAPITAL CENTER, SUITE 1100
201 NORTH ILLINOIS STREET
INDIANAPOLIS, IN 46204-4220

Mail Date: 04/21/2010

Applicant	: Toshiyasu Yabe	: DECISION ON REQUEST FOR
Patent Number	: 7640321	: RECALCULATION of PATENT
Issue Date	: 12/29/2009	: TERM ADJUSTMENT IN VIEW
Appliction No	: 10/519,199	: OF WYETH AND NOTICE OF INTENT TO
Filed	: 12/17/2004	: ISSUE CERTIFICATE OF CORRECTION
		:

The Request for Recalculation is **GRANTED** to the extent indicated.

The patent term adjustment has been determined to be **635** days. The USPTO will *sua sponte* issue a certificate of correction reflecting the amount of PTA days determined by the recalculation.

Prior to the issuance of the certificate of correction, the USPTO will afford patentee an opportunity to be heard and request reconsideration. Accordingly, patentee has **one month or thirty (30) days**, whichever is longer, to file a request for reconsideration of this patent term adjustment calculation. See 35 U.S.C. 154(b)(3)(B)(ii) and 37 CFR 1.322(a)(4). No extensions of time will be granted under 37 CFR 1.136.

Patentee should use document code PET.OP if electronically filing a request for reconsideration of this patent term adjustment calculation. The patentee must also include the information required by 37 CFR 1.705(b)(2) and the fee required by 37 CFR 1.18(e). If patentee does not file a timely request for reconsideration of this patent term adjustment calculation including the information required by 37 CFR 1.705(b)(2) and the fee required by 37 CFR 1.18(e), the USPTO will issue a certificate of correction reflecting the PTA determination noted above.

Patentee should be aware that in order to preserve the right to review in the United States District Court for the District of Columbia of the USPTO patent term adjustment determination, patentee must ensure that he or she also take the steps required under 35 U.S.C. 154(b)(4)(A) in a timely manner. Nothing in the request for recalculation should be construed as providing an alternative time frame for commencing a civil action under 35 U.S.C. 154(b)(4)(A).

Any questions concerning this decision should be directed to the Office of Patent Legal Administration at 571-272-7702.

UNITED STATES PATENT AND TRADEMARK OFFICE

Commissioner for Patents
United States Patent and Trademark Office
P.O. Box 1450
Alexandria, VA 22313-1450
www.uspto.gov

SONNENSCHEIN NATH & ROSENTHAL LLP
P.O. BOX 061080
WACKER DRIVE STATION, SEARS TOWER
CHICAGO IL 60606-1080

COPY MAILED
AUG 20 2007
OFFICE OF PETITIONS

In re Application of	:	
Jonathan Kahn, et al.	:	
Application No. 10/519,221	:	DECISION ON PETITION
Filed: July 22, 2005	:	TO WITHDRAW
Attorney Docket No. 09761730-0029	:	FROM RECORD
	:	

This is a decision on the Request to Withdraw as attorney or agent of record under 37 C.F.R. § 1.36(b) filed March 21, 2007.

The request is **APPROVED**.

A grantable request to withdraw as attorney/agent of record must be signed by every attorney/agent seeking to withdraw or contain a clear indication that one attorney is signing on behalf of another/others. A request to withdraw will not be approved unless at least 30 (thirty) days would remain between the date of approval and the later of the expiration date of a time to file a response or the expiration date of the maximum time period which can be extended under 37 C.F.R. § 1.136(a).

The request was signed by David R. Metzger on behalf of all attorneys of record who are associated with customer No. 26263.

All attorneys/agents associated with the Customer Number 26263 have been withdrawn.

Applicant is reminded that there is no attorney of record at this time.

The request to change the correspondence of record is not acceptable as the requested correspondence address is not that of: (1) the first named signing inventor; or (2) an intervening assignee of the entire interest under 37 C.F.R 3.71. All future communications from the Office will be directed to the first named signing inventor at the first copied address below until otherwise properly notified by the applicant.

In order to request or take action in a patent matter, the assignee must establish its ownership of the patent to the satisfaction of the Director. In this regard, a Statement under 37 CFR 3.73(b) must

have either: (i) documentary evidence of a chain of title from the original owner to the assignee (*e.g.*, copy of an executed assignment), and a statement affirming that the documentary evidence of the chain of title from the original owner to the assignee was or concurrently is being submitted for recordation pursuant to § 3.11; or (ii) a statement specifying where documentary evidence of a chain of title from the original owner to the assignee is recorded in the assignment records of the Office (*e.g.*, reel and frame number).

There are no pending Office actions at the present time.

Telephone inquiries concerning this decision should be directed to undersigned at 571-272-1642.

April M. Wise
Petitions Examiner
Office of Petitions

cc: JONATHAN KAHN
1108 CHEYENNE DRIVE
CROWN POINT, IN 46307

cc: JORDAN A SIGALE
LOEB & LOEB, LLP
321 NORTH CLARK
SUITE 2300
CHICAGO, IL 60610

UNITED STATES PATENT AND TRADEMARK OFFICE

UNITED STATES DEPARTMENT OF COMMERCE
United States Patent and Trademark Office
Address: COMMISSIONER FOR PATENTS
P.O. Box 1450
Alexandria, Virginia 22313-1450
www.uspto.gov

APPLICATION NUMBER	FILING OR 371 (c) DATE	FIRST NAMED APPLICANT	ATTY. DOCKET NO./TITLE
10/519,221	07/22/2005	Jonathan Kahn	09761730-0029

CONFIRMATION NO. 9714

OC000000025281169

26263
SONNENSCHEIN NATH & ROSENTHAL LLP
P.O. BOX 061080
WACKER DRIVE STATION, SEARS TOWER
CHICAGO, IL 60606-1080

Date Mailed: 08/09/2007

NOTICE REGARDING CHANGE OF POWER OF ATTORNEY

This is in response to the Power of Attorney filed 03/21/2007.

- The withdrawal as attorney in this application has been accepted. Future correspondence will be mailed to the new address of record. 37 CFR 1.33.

Office of Initial Patent Examination (571) 272-4000, or 1-800-PTO-9199
FORMER ATTORNEY/AGENT COPY

UNITED STATES PATENT AND TRADEMARK OFFICE

Commissioner for Patents
United States Patent and Trademark Office
P.O. Box 1450
Alexandria, VA 22313-1450
www.uspto.gov

BUCKLEY, MASCHOFF & TALWALKAR LLC
50 LOCUST AVENUE
NEW CANAAN, CT 06840

COPY MAILED

MAR 0 6 2009

OFFICE OF PETITIONS

ON PETITION

In re Application of :
Seiichiro Takai :
Application No. 10/519,230 :
Filed: February 27, 2006 :
Attorney Docket No. JG-SU-5205/500577.20062 :

This is a decision in response to the petition, filed December 9, 2008, to revive the above-identified application under the provisions of 37 CFR 1.137(b).

The petition is **GRANTED**.

The application became abandoned for failure to reply in a timely manner to the non-final Office action mailed June 2, 2008, which set a shortened statutory period for reply of three (3) months. No extension of time under the provisions of 37 CFR 1.136(a) was obtained. Accordingly, the application became abandoned on September 3, 2008. On December 9, 2008, the present petition was filed. A Notice of Abandonment was subsequently mailed on February 17, 2009.

The petition satisfies the conditions for revival pursuant to the provisions of 37 CFR 1.137(b) in that petitioner has supplied (1) the reply in the form of an amendment, (2) the petition fee of $1,620; and (3) an adequate statement of unintentional delay.

An extension of time under 37 CFR 1.136 must be filed prior to the expiration of the maximum extendable period for reply. *See* In re Application of S., 8 USPQ2d 1630, 1631 (Comm'r Pats. 1988). Since the $1,110 extension of time fee submitted with the petition on October 8, 2008 was subsequent to the maximum extendable period for reply, this fee is unnecessary and will be credited to petitioner's deposit account.

The application is being referred to Technology Center AU 3652 for appropriate action by the Examiner in the normal course of business on the amendment received December 9, 2008.

Telephone inquiries concerning this decision should be directed to the undersigned at (571) 272-3204. Inquiries relating to further prosecution should be directed to the Technology Center.

Sherry D. Brinkley
Petitions Examiner
Office of Petitions

08 JUN 2006

#9

UNITED STATES PATENT and TRADEMARK OFFICE

COMMISSIONER FOR PATENTS
UNITED STATES PATENT AND TRADEMARK OFFICE
P.O BOX 1450
ALEXANDRIA, VA 22313-1450
www.uspto.gov

The Law Office of William J. Bundren
734 LaRue Road
Millersville, Maryland 21108

In re Application of	:	DECISION ON
Lynn McMullen et al	:	
Application No.: 10/519,231	:	
International App. No.: PCT/CA03/00986	:	
Int. Filing Date: 27 June 2003	:	
Priority Date: 27 June 2002	:	REQUEST UNDER
Attorney's Docket No.: C66010.1IS	:	
For: CONTROLLED SPOILAGE FOOD	:	
COMPOSITIONS	:	37 CFR 1.497(d)

This is a decision on applicants' "RESPONSE" filed on 14 March 2006, which is being treated as a request under 37 CFR 1.497(d) naming additional inventor, David C. Smith, in the executed declaration. The $130.00 processing fee has been paid by check.

BACKGROUND

On 27 June 2003, applicants filed international application No. PCT/CA03/00986 and claiming a priority date of 27 June 2002.

On 27 December 2004, applicants filed a Transmittal Letter for entry into the national stage in the United States of America. Filed with the Transmittal Letter was, inter alia, the requisite basic national fee. No executed oath or declaration was filed at such time.

On 20 June 2005, the United States Designated/Elected Office (DO/EO/US) mailed a "NOTIFICATION OF MISSING REQUIREMENTS UNDER 35 U.S.C. 371 IN THE UNITED STATES DESIGNATED/ELECTED OFFICE (DO/EO/US)" (Form PCT/DO/EO/905) which informed applicant, inter alia, that an "Oath or declaration of the inventors, in compliance with 37 CFR 1.47(a) and (b), identifying the application by International application number and international filing date. The notice also indicated that the items set forth above must be submitted within two (2) months from date of this Notice or by 32 months from the priority date, whichever is later, in order to avoid abandonment of the national stage application.

On 19 December 2005, applicants filed, inter alia, an executed declaration.

On 14 February 2006, the United States Designated/Elected Office (DO/EO/US) mailed a "NOTIFICATION OF DEFECTIVE RESPONSE" (Form PCT/DO/EO/916) indicating that the oath or declaration does not comply with 37 CFR 1.497(a) and (b) in that it: is not executed in accordance with either 37 CFR 1.66 or 37 CFR 1.68. In addition, it indicated that David C. Smith is not mentioned on the published application as an inventor. The Notification indicated

that applicants are required to complete the response within a time limit of One Month from the date of this Notification or within the time remaining in the response set forth in the Notification of Missing Requirements, whichever is later.

On 14 March 2006, applicants filed a request under 37 CFR 1.497(d) to add joint inventor David C. Smith in the executed declaration.

DISCUSSION

A submission under 37 CFR 1.497(d) must include:

(1) a statement from each person being added as an inventor and from each person being deleted as an inventor that the error in inventorship occurred without deceptive intention on his or her part;
(2) the fee set forth in § 1.17(i); and
(3) If an assignment has been executed by any of the original named inventors, the written consent of the assignee (see 37 CFR §3.73(b) of this chapter).

A review of the application file reveals that applicants have satisfied items (1) - (2) under 37 CFR 1.497(d) but not item (3).

With respect to item (1), the statement submitted 14 March 2006 by David C. Smith is sufficient because the statement states that the error in inventorship occurred without a deceptive intent.

With respect to item (2), the processing fee of $130.00 has been paid by check.

With respect to item (3), there does not appear to be a written consent of the assignee, CANBIOCIN INC., which is listed as the applicant in the published international application PCT/CA2003/000986. Note MPEP 201.03.

Accordingly, the request does not meet the requirements under 37 CFR 1.497(d).

CONCLUSION

For the reasons above, the request under 37 CFR 1.497(d) is **DISMISSED** without prejudice.

If reconsideration on the merits of this petition is desired, a proper reply must be filed within TWO (2) MONTHS from the mail date of this decision. The proper reply is either a proper request under 37 CFR 1.497(d) overcoming the above stated defects. The failure to provide the proper reply will result in Abandonment of the application. Any reconsideration

request should include a cover letter entitled "Renewed Request Under 37 CFR 1.497(d)". Extensions of time may be obtained under 37 CFR 1.136(a).

Any further correspondence with respect to this matter should be addressed to the Mail Stop PCT, Commissioner for Patents, Office of PCT Legal Administration, P.O. Box 1450, Alexandria, Virginia 22313-1450, with the contents of the letter marked to the attention of the Office of PCT Legal Administration.

Rafael Bacares
PCT Legal Examiner
PCT Legal Office
Telephone: (571) 272-3276
Facsimile: (571) 273-0459

31 AUG 2006

#11

UNITED STATES PATENT and TRADEMARK OFFICE

COMMISSIONER FOR PATENTS
UNITED STATES PATENT AND TRADEMARK OFFICE
P.O BOX 1450
ALEXANDRIA, VA 22313-1450
www.uspto.gov

The Law Office of William J. Bundren
734 LaRue Road
Millersville, Maryland 21108

In re Application of	:	DECISION ON
Lynn McMullen et al	:	
Application No.: 10/519,231	:	
International App. No.: PCT/CA03/00986	:	
Int. Filing Date: 27 June 2003	:	
Priority Date: 27 June 2002	:	REQUEST UNDER
Attorney's Docket No.: C66010.1IS	:	
For: CONTROLLED SPOILAGE FOOD	:	
COMPOSITIONS	:	37 CFR 1.497(d)

This is a decision on applicants' "RENEWED REQUEST UNDER 37 CFR 1.497(d)" filed on 07 August 2006.

BACKGROUND

In a decision from this Office mailed on 08 June 2006, the decision indicated that the request was dismissed because the request did not satisfy item (3) of 37 CFR 1.497(d). The assignee, CanBiocin, Inc., had neither a copy of the executed assignment in the file or the reel and frame number so it needed to establish the right to take action under 37 CFR 3.73(b.

On 07 August 2006, applicants filed the current communication, which included, *inter alia*, a copy of the assignment of the patent application to CanBiocin, Inc.

DISCUSSION

A review of the renewed request reveals that applicant has satisfied item (3) of 37 CFR 1.497(d). In regard to item (3), CanBiocin, Inc. has submitted a copy of the assignment showing that it is the assignee of the above application and has establish its right to take action under 37 CFR §3.73(b).

Accordingly, applicant is deemed to satisfy requirements (1), (2), and (3) under 37 CFR 1.497(d).

CONCLUSION

For the reasons above, the request under 37 CFR 1.497(d) is **GRANTED.**

This application is being returned to the United States Designated/Elected Office (DO/EO/US) for continued processing consistent with this decision. The 35 USC 371 (c)(1), (c)(2), and (c)(4) date of this application is **14 March 2006**.

Rafael Bacares
PCT Legal Examiner
PCT Legal Office
Telephone: (571) 272-3276
Facsimile: (571) 273-0459

UNITED STATES DEPARTMENT OF COMMERCE
Patent and Trademark Office
ASSISTANT SECRETARY OF COMMERCE AND
COMMISSIONER OF PATENTS AND TRADEMARKS
Washington, DC 20231

4/2/09

Patent No. :7427080
Inventor(s) :Francois Paulus Naude Jr.
Issued : 9/23/2008
Title : Shopping Trolleys
Atty.doc./File No.

Request for Certificates of Correction

Consideration has been given to your request for the issuance of a Certificate of Correction, for the above – identified patent under the provisions of CFR 1.322.

Inspection of the application for the patent reveals col.11 claim 3, line 63 is printed in accordance with the record and please show evidence of an amendment or document. Therefore being no fault on the Patent and Tradèmark Office, It has no authority to issue a certificate of correction under the provision of 1.322.

In view of the forgoing, your request in this matter, is hereby denied. However the remaining of the corrections will be corrected.

Future written correspondence concerning this matter should be filed and directed to Decisions & Certificates of Correction Branch.

Henry Randall
Mary Diggs
Decisions & Certificates
of Correction Branch
(703) 308-9390 Ext. 108

FITCH EVEN TABIN & FLANNERY
120 SOUTH LaSalle Street, Suite 1600
Chicago, IL 60603-3406

HR/MD

SPE RESPONSE FOR CERTIFICATE OF CORRECTION

Paper No.: _____

DATE : 5/1/09

TO SPE OF : ART UNIT 3618 Ellis, Christopher

SUBJECT : Request for Certificate of Correction for Appl. No.: 10/519235 Patent No.: 7427080

Please respond to this request for a certificate of correction within 7 days.

FOR IFW FILES:

Please review the requested changes/corrections as shown in the **COCIN** document(s) in the IFW application image. No new matter should be introduced, nor should the scope or meaning of the claims be changed.

Please complete the response (see below) and forward the completed response to scanning using document code **COCX**.

FOR PAPER FILES:

Please review the requested changes/corrections as shown in the attached certificate of correction. Please complete this form (see below) and forward it with the file to:

Certificates of Correction Branch (CofC)
South Tower - 9A22
Palm Location 7580

Certificates of Correction Branch
703-308-9390 ext. _____

Thank You For Your Assistance

The request for issuing the above-identified correction(s) is hereby:
Note your decision on the appropriate box.

- ☒ **Approved** — **All** changes apply.
- ☐ **Approved in Part** — Specify below which changes **do not** apply.
- ☐ **Denied** — State the reasons for denial below.

Comments: _____

/Lesley D Morris/ 9/18/09

SPE **Art Unit**

28 OCT 2005

#5

UNITED STATES PATENT AND TRADEMARK OFFICE

Commissioner for Patents
United States Patent and Trademark Office
P.O. Box 1450
Alexandria, VA 22313-1450
www.uspto.gov

PERKINS COIE LLP
P.O. BOX 2168
MENLO PARK CA 94026

In re Application of Thomas FOUNTAIN Application No.: 10/519,239 PCT No.: PCT/US03/21695 Int. Filing: 11 July 2003 Priority Date: 12 July 2002 Attorney Docket No.:36321-8015.US01 For: NETWORK ATTACHED ENCRYPTION	DECISION ON PETITION UNDER 37 CFR 1.137(b)

The petition to revive under 37 CFR 1.137(b) filed 19 September 2005 in the above-captioned application is hereby **GRANTED** as follows:

Applicant's statement that the "entire delay in filing the required reply from the due date for the required reply until the filing of a grantable petition under 37 CFR 1.137(b) was unintentional" meets the requirements of 37 CFR 1.137(b)(3).

A review of the application file reveals that the basic national fee of $150 has been provided. The required petition fee of $750 was also paid. Thus, the requirements of 37 CFR 1.137(b) have been satisfied. Therefore, the request to revive the application abandoned under 35 U.S.C. 371(d) is granted as to the National stage in the United States of America.

This application is being forwarded to the United States Designated/Elected Office for further processing including the issuance of a Notification of Missing Requirements indicating that the oath or declaration, in compliance with 37 CFR 1.497(a) and (b), and the surcharge for filing the oath or declaration after the thirty month period, is required.

Cynthia M. Kratz
Attorney Advisor
Office of PCT Legal Administration

Telephone: 571-272-3286
Facsimile: 571-273-0459

UNITED STATES PATENT AND TRADEMARK OFFICE

UNITED STATES DEPARTMENT OF COMMERCE
United States Patent and Trademark Office
Address: COMMISSIONER FOR PATENTS
P.O. Box 1450
Alexandria, Virginia 22313-1450
www.uspto.gov

HARMAN - BRINKS HOFER INDY
Brinks Hofer Gilson & Lione
CAPITAL CENTER, SUITE 1100
201 NORTH ILLINOIS STREET
Indianapolis, IN 46204-4220

Mail Date: 04/27/2010

Applicant	: Marek Strassenburg-Kleciak	: DECISION ON REQUEST FOR
Patent Number	: 7643669	: RECALCULATION of PATENT
Issue Date	: 01/05/2010	: TERM ADJUSTMENT IN VIEW
Application No	: 10/519,252	: OF WYETH AND NOTICE OF INTENT TO
Filed	: 11/21/2005	: ISSUE CERTIFICATE OF CORRECTION
		:

The Request for Recalculation is **GRANTED** to the extent indicated.

The patent term adjustment has been determined to be **1013** days. The USPTO will *sua sponte* issue a certificate of correction reflecting the amount of PTA days determined by the recalculation.

Prior to the issuance of the certificate of correction, the USPTO will afford patentee an opportunity to be heard and request reconsideration. Accordingly, patentee has **one month or thirty (30) days**, whichever is longer, to file a request for reconsideration of this patent term adjustment calculation. See 35 U.S.C. 154(b)(3)(B)(ii) and 37 CFR 1.322(a)(4). No extensions of time will be granted under 37 CFR 1.136.

Patentee should use document code PET.OP if electronically filing a request for reconsideration of this patent term adjustment calculation. The patentee must also include the information required by 37 CFR 1.705(b)(2) and the fee required by 37 CFR 1.18(e). If patentee does not file a timely request for reconsideration of this patent term adjustment calculation including the information required by 37 CFR 1.705(b)(2) and the fee required by 37 CFR 1.18(e), the USPTO will issue a certificate of correction reflecting the PTA determination noted above.

Patentee should be aware that in order to preserve the right to review in the United States District Court for the District of Columbia of the USPTO patent term adjustment determination, patentee must ensure that he or she also take the steps required under 35 U.S.C. 154(b)(4)(A) in a timely manner. Nothing in the request for recalculation should be construed as providing an alternative time frame for commencing a civil action under 35 U.S.C. 154(b)(4)(A).

Any questions concerning this decision should be directed to the Office of Patent Legal Administration at 571-272-7702.

UNITED STATES PATENT AND TRADEMARK OFFICE

Commissioner for Patents
United States Patent and Trademark Office
P.O. Box 1450
Alexandria, VA 22313-1450
www.uspto.gov

KNOBBE MARTENS OLSON & BEAR, LLP
2040 MAIN STREET, FOURTEENTH FLOOR
IRVINE, CA 92614

MAILED

MAR 31 2009

OFFICE OF PETITIONS

In re Application of	:	
Mitsuaki MAEDA	:	
Application No. 10/519,257	:	DECISION ON PETITION
Filed: December 20, 2004	:	
Attorney Docket No. SIMTEK.6675APC	:	

This is a decision on the petition under the unintentional provisions of 37 CFR 1.137(b), filed February 24, 2009, to revive the above-identified application.

The petition is **GRANTED**.

The application became abandoned for failure to reply in a timely manner to the Restriction Requirement, mailed March 17, 2008, which set a shortened statutory period for reply of one (1) month or thirty (30) days (whichever is later). No extensions of time under the provisions of 37 CFR 1.136(a) were obtained. Accordingly, the application became abandoned on April 18, 2008.

The petition satisfies the requirements of 37 CFR 1.137(b) in that petitioner has supplied (1) the reply in the form of an election, (2) the petition fee of $1620; and (3) the required statement of unintentional delay.

It is not apparent whether the person signing the statement of unintentional delay was in a position to have firsthand or direct knowledge of the facts and circumstances of the delay at issue. Nevertheless, such statement is being treated as having been made as the result of a reasonable inquiry into the facts and circumstances of such delay. See 37 CFR 10.18(b) and Changes to Patent Practice and Procedure; Final Rule Notice, 62 Fed. Reg. 53131, 53178 (October 10, 1997), 1203 Off. Gaz. Pat. Office 63, 103 (October 21, 1997). In the event that such an inquiry has not been made, petitioner must make such an inquiry. If such inquiry results in the discovery that it is not correct that the entire delay in filing the required reply from the due date for the reply until the filing of a grantable petition pursuant to 37 CFR 1.137(b) was unintentional, petitioner must notify the Office.

Telephone inquiries concerning this decision should be directed to Diane Goodwyn at (571) 272-6735.

This application is being referred to Technology Center AU 2612 for appropriate action by the Examiner in the normal course of business.

Thurman Page
Petitions Examiner
Office of Petitions

SPE RESPONSE FOR CERTIFICATE OF CORRECTION

Paper No.: _____

DATE : 11/12/09

TO SPE OF : ART UNIT 1656

SUBJECT : Request for Certificate of Correction for Appl. No 10/519259 No.: 7,5585620

Please respond to this request for a certificate of correction within 7 days.

FOR IFW FILES:

Please review the requested changes/corrections as shown in the **COCIN** document(s) in the IFW application image. No new matter should be introduced, nor should the scope or meaning of the claims be changed.

Please complete the response (see below) and forward the completed response to scanning using document code **COCX**.

FOR PAPER FILES:

Please review the requested changes/corrections as shown in the attached certificate of correction. Please complete this form (see below) and forward it with the file to:

Certificates of Correction Branch (CofC)

Should the change(s) Be made?

RoChaun Johnson
Certificates of Correction Branch
571 272-0470

Thank You For Your Assistance

The request for issuing the above-identified correction(s) is hereby:
Note your decision on the appropriate box.

- ☑ **Approved** — **All** changes apply.
- ☐ **Approved in Part** — Specify below which changes **do not** apply.
- ☐ **Denied** — State the reasons for denial below.

Comments: _____

_____

_____

_____

_____

SPE — **Art Unit** 1657

UNITED STATES PATENT AND TRADEMARK OFFICE

Commissioner for Patents
United States Patent and Trademark Office
P.O. Box 1450
Alexandria, VA 22313-1450
www.uspto.gov

FULBRIGHT & JAWORSKI L.L.P.
600 CONGRESS AVE.
SUITE 2400
AUSTIN TX 78701

MAILED

APR 14 2010

OFFICE OF PETITIONS

In re Patent No. 7,585,620	:
Schutz et al.	: DECISION ON REQUEST FOR
Issue Date: September 8, 2009	: RECONSIDERATION OF
Application No. 10/519,259	: PATENT TERM ADJUSTMENT
Filed: February 14, 2006	: AND NOTICE OF INTENT
Attorney Docket No.	: TO ISSUE CERTIFICATE OF
DEBE:046US/10413939	: CORRECTION
Title: METHOD FOR DETECTING AND	:
FOR REMOVING ENDOTOXIN	:

This is a decision on the petition filed on October 19, 2009, which is being treated as a petition under 37 CFR 1.705(d) requesting that the patent term adjustment indicated on the above-identified patent be corrected to indicate that the term of the above-identified patent is extended or adjusted by eighty-one (81) days.

The petition to correct the patent term adjustment indicated on the above-identified patent to indicate that the term of the above-identified patent is extended or adjusted by seventy-seven (77) days is **GRANTED to the extent indicated herein.**

The calculation of delay pursuant to 37 CFR 1.702(b) is based on a national stage commencement date of December 27, 2004, not December 24, 2004. As the expiration of the 30-month period pursuant to 35 U.S.C. 371(b) fell on a holiday, the period expired on the subsequent business day. See PCT Rule 80.5. Accordingly, the commencement date is Monday, December 27, 2004.

As the period from the filing date of the request for continued examination (RCE) to the issue date of the patent is not included in the "B" delay period, the over three year period

begins on December 28, 2007 and ends on June 10, 2008, the day before the RCE was filed, and is 166 days. See 35 U.S.C. 154(b)(1)(B)(i). As such, the patent term adjustment is 77, not 81 days.

The Office will *sua sponte* issue a certificate of correction. Pursuant to 37 CFR 1.322, the Office will not issue a certificate of correction without first providing assignee or patentee an opportunity to be heard. Accordingly, patentees are given **one (1) month or thirty (30) days**, whichever is longer, from the mail date of this decision to respond. No extensions of time will be granted under § 1.136.

The application is being forwarded to the Certificates of Branch for issuance of a certificate of correction. The Office will issue a certificate of correction indicating that the term of the above-identified patent is extended or adjusted by **seventy-seven (77)** days.

The Office acknowledges submission of the $200.00 fee set forth in 37 CFR 1.18(e). No additional fees are required. The fee set forth in 37 CFR 1.18(e) is a requirement and will not be refunded.

Telephone inquiries specific to this matter should be directed to Petitions Attorney, Charlema Grant at (571) 272-3215.

Anthony Knight
Director
Office of Petitions

Enclosure: Copy of DRAFT Certificate of Correction

UNITED STATES PATENT AND TRADEMARK OFFICE

CERTIFICATE OF CORRECTION

PATENT : 7,585,620 B2

DATED : **September 8, 2009** **DRAFT**

INVENTOR(S) : Schutz et al.

It is certified that error appears in the above-identified patent and that said Letters Patent is hereby corrected as shown below:

On the cover page,

[*] Notice: Subject to any disclaimer, the term of this patent is extended or adjusted under 35 USC 154(b) by 0 days

Delete the phrase "by 0 days" and insert – by 77 days--

UNITED STATES PATENT AND TRADEMARK OFFICE

UNITED STATES DEPARTMENT OF COMMERCE
United States Patent and Trademark Office
Address: COMMISSIONER FOR PATENTS
P.O. Box 1450
Alexandria, Virginia 22313-1450
www.uspto.gov

MARK D. SARALINO (GENERAL)
RENNER, OTTO, BOISSELLE & SKLAR, LLP
1621 EUCLID AVENUE, NINETEENTH FLOOR
CLEVELAND, OH 44115-2191

Mail Date: 04/21/2010

Applicant	: Adrian Marc Simon Jacobs	: DECISION ON REQUEST FOR
Patent Number	: 7580085	: RECALCULATION of PATENT
Issue Date	: 08/25/2009	: TERM ADJUSTMENT IN VIEW
Appliction No	: 10/519,264	: OF WYETH AND NOTICE OF INTENT TO
Filed	: 08/26/2005	: ISSUE CERTIFICATE OF CORRECTION
		:

The Request for Recalculation is **GRANTED** to the extent indicated.

The patent term adjustment has been determined to be **0** days. The USPTO will *sua sponte* issue a certificate of correction reflecting the amount of PTA days determined by the recalculation.

Prior to the issuance of the certificate of correction, the USPTO will afford patentee an opportunity to be heard and request reconsideration. Accordingly, patentee has **one month or thirty (30) days**, whichever is longer, to file a request for reconsideration of this patent term adjustment calculation. See 35 U.S.C. 154(b)(3)(B)(ii) and 37 CFR 1.322(a)(4). No extensions of time will be granted under 37 CFR 1.136.

Patentee should use document code PET.OP if electronically filing a request for reconsideration of this patent term adjustment calculation. The patentee must also include the information required by 37 CFR 1.705(b)(2) and the fee required by 37 CFR 1.18(e). If patentee does not file a timely request for reconsideration of this patent term adjustment calculation including the information required by 37 CFR 1.705(b)(2) and the fee required by 37 CFR 1.18(e), the USPTO will issue a certificate of correction reflecting the PTA determination noted above.

Patentee should be aware that in order to preserve the right to review in the United States District Court for the District of Columbia of the USPTO patent term adjustment determination, patentee must ensure that he or she also take the steps required under 35 U.S.C. 154(b)(4)(A) in a timely manner. Nothing in the request for recalculation should be construed as providing an alternative time frame for commencing a civil action under 35 U.S.C. 154(b)(4)(A).

Any questions concerning this decision should be directed to the Office of Patent Legal Administration at 571-272-7702.

UNITED STATES PATENT AND TRADEMARK OFFICE

UNITED STATES DEPARTMENT OF COMMERCE
United States Patent and Trademark Office
Address: COMMISSIONER FOR PATENTS
P.O. Box 1450
Alexandria, Virginia 22313-1450
www.uspto.gov

THE WEBB LAW FIRM, P.C.
700 KOPPERS BUILDING
436 SEVENTH AVENUE
PITTSBURGH, PA 15219

Mail Date: 04/28/2010

Applicant	: Robertus Cornelis Van Rijn	: DECISION ON REQUEST FOR
Patent Number	: 7669333	: RECALCULATION of PATENT
Issue Date	: 03/02/2010	: TERM ADJUSTMENT IN VIEW
Application No	: 10/519,273	: OF WYETH
Filed	: 08/16/2005	:
		:

The Patentee's Request for Recalculation is **DISMISSED.**

This Request is deemed ineligible for consideration for one or more of the following reasons:

(A). The patent for which PTA recalculation is requested is either a design or reissue application or is a reexamination proceeding;

(B). The patent for which PTA recalculation is requested resulted from a utility or plant application filed under 35 USC 111(a) before May 29, 2000 and no CPA filed in the application on/after May 29, 2000;

(C). The patent for which PTA recalculation is requested resulted from an international application in which the international filing date was before May 29, 2000 and no CPA filed in the application on/after May 29, 2000;

(D). The patent for which PTA recalculation is requested issued on/after March 2, 2010;

(E). The Request for Recalculation was filed more than 180 days after the grant date of the patent and the request was not filed within two months of a dismissal of a request for reconsideration of the of the patent term under 37 CFR 1.705(d);

(F). The Request for Recalculation is not solely limited to USPTO pre-Wyeth interpretation of 35 U.S.C. 154(b)(2)(A);

or

(G). A civil action was filed pursuant to 35 U.S.C. 154(b)(4)(A)concerning the same patent at issue in this request.

Patentee may file a reply to this decision dismissing the Request for Recalculation. Patentee must file such reply within one month or thirty days, whichever is longer, of the mail date of the decision dismissing the Request for Recalculation. No fee is required if patentee is asserting in the reply that the dismissal for ineligibility is improper.

Patentee should use document code PET.OP if electronically filing a reply to this dismissal. If the USPTO finds that the request was improperly deemed ineligible, the USPTO will mail applicant a recalculation determination.

Patentee should be aware that in order to preserve the right to review in the United States District Court for the District of Columbia of the USPTO patent term adjustment determination, patentee must ensure that he or she also take the steps required under 35 U.S.C. 154(b)(4)(A). Nothing in the request for recalculation should be construed as providing an alternative time frame for commencing a civil action under 35 U.S.C. 154 (b)(4)(A).

Any questions concerning this decision should be directed to the Office of Patent Legal Administration at 571-272-7702.

UNITED STATES PATENT AND TRADEMARK OFFICE

Commissioner for Patents
United States Patent and Trademark Office
P.O. Box 1450
Alexandria, VA 22313-1450
www.uspto.gov

HAYNES AND BOONE, LLP
901 MAIN STREET
SUITE 3100
DALLAS TX 75202-3789

COPY MAILED

AUG 2 0 2007

OFFICE OF PETITIONS

In re Application of

David Paul Briscoe, et al.
Application No. 10/519,290
Filed: December 27, 2004
Attorney Docket No. 25791.90.05

DECISION ON PETITION
TO WITHDRAW
FROM RECORD

This is a decision on the Request to Withdraw as attorney or agent of record under 37 C.F.R. § 1.36(b), filed April 23, 2007.

The request is **NOT APPROVED**.

A grantable request to withdraw as attorney/agent of record must be signed by every attorney/agent seeking to withdraw or contain a clear indication that one attorney is signing on behalf of another/others. A request to withdraw will not be approved unless at least 30 (thirty) days would remain between the date of approval and the later of the expiration date of a time to file a response or the expiration date of the maximum time period which can be extended under 37 C.F.R. § 1.136(a).

The request cannot be approved because no reasons for withdrawal have been provided. The Office cannot, at this time, determine whether practitioner's request is one of the mandatory or permissive reasons enumerated in 37 CFR 10.40. Any subsequent requests must include reasons for withdrawal. Please note that there is a space provided for on PTO/SB/83 (Request to Withdraw as Attorney or Agent) to supply practitioner's reasons.

All future communications from the Office will continue to be directed to the above-listed address until otherwise notified by applicant.

Telephone inquiries concerning this decision should be directed to undersigned at 571-272-1642.

April M. Wise
Petitions Examiner
Office of Petitions

cc: TODD MATTINGLY
KING & SPALDING, LLP
1100 LOUISANIA STREET
SUITE 4000
HOUSTON, TX 77002

12 AUG 2005

#4

UNITED STATES PATENT AND TRADEMARK OFFICE

COMMISSIONER FOR PATENTS
UNITED STATES PATENT AND TRADEMARK OFFICE
P.O. BOX 1450
ALEXANDRIA, VA 22313-1450
www.uspto.gov

Gregory P. La Pointe
Bachman & LaPointe
900 Chapel Street, Suite 1201
New Haven, CT 06510

In re Application of	:	
KNOBEL, Gaudio	:	
Application No.: 10/519,292	:	DECISION ON PETITION
PCT No.: PCT/EP03/04812	:	UNDER 37 CFR 1.137(b)
Int. Filing Date: 08 May 2003	:	
Priority Date: 27 May 2002	:	
Attorney Docket No.: 04-605	:	
For: METHOD AND DEVICE FOR PRODUCING CONFECTIONARY PRODUCTS		

The petition to revive under 37 CFR 1.137(b) filed 18 July 2005 in the above-captioned application is hereby **GRANTED** as follows:

Applicant's statement that "the entire delay in filing the required reply from the due date for the reply until the filing of a grantable petition under 37 CFR 1.137(b) was unintentional" meets the requirements of 37 CFR 1.137(b)(3).

A review of the application file reveals that applicant has submitted the required reply (petition to revive) and the requirements of 37 CFR 1.137(b) have been satisfied. Therefore, the request to revive the application abandoned under 35 U.S.C. 371(d) is granted as to the National stage in the United States of America.

This application is being returned to the United States Designated/Elected Office for processing in accordance with this decision.

Anthony Smith

Anthony Smith
Attorney-Advisor
Office of PCT Legal Administration
Tel.: 571-272-3298
Facsimile: 571-273-0459

UNITED STATES PATENT AND TRADEMARK OFFICE

Commissioner for Patents
United States Patent and Trademark Office
P.O. Box 1450
Alexandria, VA 22313-1450
www.uspto.gov

PETER A. HAAS, ESQUIRE
1929 SW 13TH AVENUE
PORTLAND, OR 97201

COPY MAILED

JAN 2 6 2009

OFFICE OF PETITIONS

In re Application of	:	
Ognjen Amidzic	:	
Application No. 10/519,299	:	ON PETITION
Filed: February 11, 2005	:	
Attorney Docket No. None	:	

This is a decision on the petition filed December 29, 2008, which is being treated under the unintentional provisions of 37 CFR 1.137(b), to revive the above-identified application.

The petition is **GRANTED**.

The application became abandoned for failure to timely file a reply within the meaning of 37 CFR 1.113 to the final Office action of April 7, 2008. No extensions of time pursuant to the provisions of 37 CFR 1.136(a) were timely obtained. Accordingly, the date of abandonment of this application is July 8, 2008. It is noted that a Request for Continued Examination (RCE) was filed on October 7, 2008; however, the RCE was held improper by a Notice mailed November 13, 2008. A Notice of Abandonment was mailed December 4, 2008. In response, on December 29, 2008, the present petition was filed.

37 CFR 1.137(b)(3) requires a statement that "the entire delay in filing the required reply from the due date for the reply until the filing of a grantable petition pursuant to 37 CFR 1.137(b) was unintentional." Since the statement appearing in the petition varies from the language required by 37 CFR 1.137(b)(3), the statement is being construed as the required statement. Petitioner must notify the Office if this is **not** a correct reading of the statement appearing in the petition.

The petition satisfies the requirements of 37 CFR 1.137(b) in that petitioner has supplied (1) the reply in the form of a Request for Continued Examination (RCE) and fee of $405, (2) the petition fee of $810, and (3) an adequate statement of unintentional delay.

An extension of time under 37 CFR 1.136 must be filed prior to the expiration of the maximum extendable period for reply. See In re Application of S., 8 USPQ2d 1630, 1631 (Comm'r Pats. 1988). Since the $555 extension of time fee submitted with the petition on December 29, 2008 was subsequent to the maximum extendable period for reply, petitioner may request a refund of this fee by writing to the following address: Mail Stop 16, Commissioner for Patents, P. O. Box 1450, Alexandria, VA 22313-1450. A copy of this decision should accompany petitioner's request.

Telephone inquiries concerning this decision should be directed to Alicia Kelley at (571) 272-6059.

This application is being referred to Technology Center AU 3736 for appropriate action by the Examiner in the normal course of business of the RCE in accordance with 37 CFR 1.114.

/SDB/
Sherry D. Brinkley
Petitions Examiner
Office of Petitions

UNITED STATES PATENT AND TRADEMARK OFFICE

UNITED STATES DEPARTMENT OF COMMERCE
United States Patent and Trademark Office
Address: COMMISSIONER FOR PATENTS
P.O. Box 1450
Alexandria, Virginia 22313-1450
www.uspto.gov

KLARQUIST SPARKMAN, LLP
121 S.W. SALMON STREET
SUITE #1600
PORTLAND, OR 97204-2988

Mail Date: 04/20/2010

Applicant	: Roland Martin	: DECISION ON REQUEST FOR
Patent Number	: 7575742	: RECALCULATION of PATENT
Issue Date	: 08/18/2009	: TERM ADJUSTMENT IN VIEW
Appliction No	: 10/519,311	: OF WYETH AND NOTICE OF INTENT TO
Filed	: 12/22/2004	: ISSUE CERTIFICATE OF CORRECTION
		:

The Request for Recalculation is **GRANTED** to the extent indicated.

The patent term adjustment has been determined to be **80** days. The USPTO will *sua sponte* issue a certificate of correction reflecting the amount of PTA days determined by the recalculation.

Prior to the issuance of the certificate of correction, the USPTO will afford patentee an opportunity to be heard and request reconsideration. Accordingly, patentee has **one month or thirty (30) days**, whichever is longer, to file a request for reconsideration of this patent term adjustment calculation. See 35 U.S.C. 154(b)(3)(B)(ii) and 37 CFR 1.322(a)(4). No extensions of time will be granted under 37 CFR 1.136.

Patentee should use document code PET.OP if electronically filing a request for reconsideration of this patent term adjustment calculation. The patentee must also include the information required by 37 CFR 1.705(b)(2) and the fee required by 37 CFR 1.18(e). If patentee does not file a timely request for reconsideration of this patent term adjustment calculation including the information required by 37 CFR 1.705(b)(2) and the fee required by 37 CFR 1.18(e), the USPTO will issue a certificate of correction reflecting the PTA determination noted above.

Patentee should be aware that in order to preserve the right to review in the United States District Court for the District of Columbia of the USPTO patent term adjustment determination, patentee must ensure that he or she also take the steps required under 35 U.S.C. 154(b)(4)(A) in a timely manner. Nothing in the request for recalculation should be construed as providing an alternative time frame for commencing a civil action under 35 U.S.C. 154(b)(4)(A).

Any questions concerning this decision should be directed to the Office of Patent Legal Administration at 571-272-7702.

UNITED STATES PATENT AND TRADEMARK OFFICE

Commissioner for Patents
United States Patent and Trademark Office
P.O. Box 1450
Alexandria, VA 22313-1450
www.uspto.gov

COPY MAILED
SEP 19 2006
OFFICE OF PETITIONS

Houston Eliseeva
4 Militia Drive, Suite 4
Lexington, MA 02421

In re Application of	:	
Weishi Li et al.	:	
Application No. 10/519,319	:	DECISION ON PETITION
Filed: January 18, 2005	:	TO WITHDRAW
Attorney Docket No. 0064.0001US1	:	FROM RECORD
	:	

This is a decision on the Request to Withdraw as attorney or agent of record under 37 C.F.R. § 1.36(b), filed July 17, 2006.

The request is **APPROVED**.

A grantable request to withdraw as attorney/agent of record must be signed by every attorney/agent seeking to withdraw or contain a clear indication that one attorney is signing on behalf of another/others. A request to withdraw will not be approved unless at least 30 (thirty) days would remain between the date of approval and the later of the expiration date of a time to file a response or the expiration date of the maximum time period which can be extended under 37 C.F.R. § 1.136(a).

The request was signed by J. Grant Houston on behalf of all attorneys of record who are associated with Customer No. 29127.

All attorneys/agents associated with the Customer No. 29127 have been withdrawn.

Applicant is reminded that there is no attorney of record at this time.

All future correspondence will be directed to the first named inventor Weishi Li at the address indicated below.

There is no outstanding Office action at this time.

Telephone inquiries concerning this decision should be directed to Terri Williams at 571-272-2991.

David Bucel
Petitions Examiner
Office of Petitions

cc: **Weishi Li**
Intellectual Property Department
Huawei Service Centre Building
Kefa Road, Science Industrial Park
Shenzhen, Guangdong Province, 518057
CHINA

18 AUG 2005

UNITED STATES PATENT AND TRADEMARK OFFICE

Commissioner for Patents
United States Patent and Trademark Office
P.O. Box 1450
Alexandria, VA 22313-1450
www.uspto.gov

MORRISON & FOERSTER LLP
425 MARKET STREET
SAN FRANCISCO CA 94105-2482

In re Application of	:	
SVERKER HARD af SEGERSTAD (Deceased)	:	DECISION ON
Application No.: 10/519,333	:	
PCT No.: PCT/SE03/01135	:	REQUEST
Int. Filing Date: 27 June 2003	:	
Priority Date: 04 July 2002	:	UNDER 37 CFR 1.42
Attorney Docket no.: 514862001700	:	
For: MULTILAYER MICROSTRUCTURAL	:	
DEVICE	:	

This is a decision on applicant's submission under 37 CFR 1.42 filed in the United States Patent and Trademark Office (USPTO) on 23 June 2005.

On 22 December 2004, applicant filed a Transmittal Letter requesting entry into the national stage in the United States of America under 35 U.S.C. § 371 with, *inter alia*, the requisite basic national fee.

On 08 June 2005, a Notification of Missing Requirements was mailed to applicant indicating that an oath or declaration of the inventors, in compliance with 37 CFR 1.497(a) and (b), was required.

On 23 June 2005, applicant filed a response to the Notification submitting a declaration signed by inventors Fredrik Nikolajeff ,Olie Larsson, and Thomas Ericson and identifying Anna-Lena Hard af Segerstad Boberg as the legal representative of deceased inventor, Sverker Hard af Segerstad

Applicant provided a declaration executed by Anna-Lena Hard af Segerstad Boberg, which identifies her as the legal representative of deceased inventor, Sverker Hard af Segerstad. The declaration identifies and is executed by the joint inventors and the legal representative for the deceased inventor. The declaration states the citizenship, residency and mailing address for the inventors, the deceased inventor and the legal representative. Accordingly, it is appropriate, at this time, to accord the application status under 37 CFR 1.42.

For the above reasons, the request for status under 37 CFR 1.42 is **GRANTED**.

The application will be forwarded to the United States Designated/Elected Office for further processing. The 35 U.S.C. 371 (c)(1), (c)(2) and (c)(4) date is **23 June 2005.**

Cynthia M. Kratz
Attorney Advisor
Office of PCT Legal Administration

Telephone: 571-272-3286

UNITED STATES PATENT AND TRADEMARK OFFICE

UNITED STATES DEPARTMENT OF COMMERCE
United States Patent and Trademark Office
Address: COMMISSIONER FOR PATENTS
P.O. Box 1450
Alexandria, Virginia 22313-1450
www.uspto.gov

MILLEN, WHITE, ZELANO & BRANIGAN, P.C.
2200 CLARENDON BLVD.
SUITE 1400
ARLINGTON, VA 22201

Mail Date: 04/20/2010

Applicant	: Gerard Hillion	: DECISION ON REQUEST FOR
Patent Number	: 7612245	: RECALCULATION of PATENT
Issue Date	: 11/03/2009	: TERM ADJUSTMENT IN VIEW
Appliction No	: 10/519,355	: OF WYETH AND NOTICE OF INTENT TO
Filed	: 12/19/2005	: ISSUE CERTIFICATE OF CORRECTION
		:

The Request for Recalculation is **GRANTED** to the extent indicated.

The patent term adjustment has been determined to be **988** days. The USPTO will *sua sponte* issue a certificate of correction reflecting the amount of PTA days determined by the recalculation.

Prior to the issuance of the certificate of correction, the USPTO will afford patentee an opportunity to be heard and request reconsideration. Accordingly, patentee has **one month or thirty (30) days**, whichever is longer, to file a request for reconsideration of this patent term adjustment calculation. See 35 U.S.C. 154(b)(3)(B)(ii) and 37 CFR 1.322(a)(4). No extensions of time will be granted under 37 CFR 1.136.

Patentee should use document code PET.OP if electronically filing a request for reconsideration of this patent term adjustment calculation. The patentee must also include the information required by 37 CFR 1.705(b)(2) and the fee required by 37 CFR 1.18(e). If patentee does not file a timely request for reconsideration of this patent term adjustment calculation including the information required by 37 CFR 1.705(b)(2) and the fee required by 37 CFR 1.18(e), the USPTO will issue a certificate of correction reflecting the PTA determination noted above.

Patentee should be aware that in order to preserve the right to review in the United States District Court for the District of Columbia of the USPTO patent term adjustment determination, patentee must ensure that he or she also take the steps required under 35 U.S.C. 154(b)(4)(A) in a timely manner. Nothing in the request for recalculation should be construed as providing an alternative time frame for commencing a civil action under 35 U.S.C. 154(b)(4)(A).

Any questions concerning this decision should be directed to the Office of Patent Legal Administration at 571-272-7702.

UNITED STATES PATENT AND TRADEMARK OFFICE

JAN 4 2007

Commissioner for Patents
United States Patent and Trademark Office
P.O. Box 1450
Alexandria, VA 22313-1450
www.uspto.gov

MILLEN, WHITE, ZELANO & BRANIGAN, P.C.
2200 CLARENDON BLVD.
SUITE 1400
ARLINGTON VA 22201

In re Application of	:
Bertram Cezanne et al	:
Serial No.: 10/519,356	: PETITION DECISION
Filed: December 28, 2004	:
Attorney Docket No.: MERCK-2952	:

This is in response to the petition under 37 CFR 1.144, filed September 27, 2006, requesting withdrawal of an improper Lack of Unity requirement.

BACKGROUND

A review of the file history shows that this application was filed under 35 U.S.C. 371 and accepted on December 28, 2004, and contained claims 1-33. In a first Office action, mailed January 17, 2006, the examiner set forth a Lack of Unity between the inventions set forth in claims 1-33, as follows:

Group I – Claims 1-25 and 27-30, drawn to compounds of Formula I which is N[4-(2-thioxopyrrolidin-1-yl)phenyl]-2-(3-aminomethyl-phenyl)-5-trifluoromethyl-2H-pyrazole-3-carboxamide;

Group II – Claims 1-25 and 27-30, drawn to compounds of Formula I which is N[4-(2-iminopyrrolidin-1-yl)phenyl]-2-(3-aminocarbonyl-phenyl)-5-trifluoromethyl-2H-pyrazole-3-carboxamide;

Group III – Claims 1-25 and 27-30, drawn to compounds of Formula I which is N[3-chloro-4-(2-thioxopyrrolidin-1-yl)phenyl]-2-(3-aminocarbonyl-phenyl)-5-trifluoromethyl-2H-pyrazole-3-carboxamide;

Group IV – Claims 1-25 and 27-30, drawn to compounds of Formula I which is N[4-(2-iminopyrrolidin-1-yl)phenyl]-2-(3-aminocarbonyl-phenyl)-5-trifluoromethyl-2H-pyrazole-3-carboxamide;

Group V – Claims 1-25 and 27-30, drawn to compounds of Formula I which is N[4-(2-methoxyiminopyrrolidin-1-yl)phenyl]-2-(3-aminocarbonyl-phenyl)-5-trifluoromethyl-2H-pyrazole-3-carboxamide;

Group VI - Claims 1-25 and 27-30, drawn to compounds of Formula I which is N[3-methyl-4-(2-methoxyiminopyrrolidin-1-yl)phenyl]-2-(3-aminocarbonyl-phenyl)-5-trifluoromethyl-2H-pyrazole-3-carboxamide;

Group VII – Claim 26, drawn to a method of preparation of the compounds of Formula I;

Group VIII – Claims 31 and 33, drawn to the use of the compounds of Formula I

Group IX – Claims 32, drawn to kits containing compounds of Formula I.

The examiner indicated the above list was not exhaustive and allowed applicants to select another compound within the scope of Formula I for examination purposes. The examiner indicated the compounds lacked Unity due to the variety of substituents and the lack of a common core which made a contribution to the art.

Applicants replied on February 17, 2006, amending claims 1-33 and adding claims 34-44. Applicants elected the compounds of Group I with traverse. Applicants argued that all of the compounds of Groups I-VI should be examined together as they have a common property or activity and possess a common significant structural element.

The examiner mailed a new Office action to applicants on April 20, 2006, acknowledging the election of Group I and the traverse, but maintaining the requirement, and making it Final without substantively responding to applicants' arguments for traversal. The examiner then indicated that the examination would be limited to compounds of Formula I where D is absent, M is a phenyl ring, W is pyrazole bonded to the phenyl ring at the 1-position, R^1 is CH_2NH_2 bonded meta to the pyrazole ring and X is CONH, all other substituents being as defined. Claims 1-3 and 6-31 were objected to as containing non-elected subject matter. Claims 27-28 were rejected under 35 U.S.C. 112, first paragraph, as lacking enablement. All other examined claims were indicated as free of the prior art.

Applicants replied on July 20, 2006, adding claims 45-58 and traversing the Lack of Unity requirement again. Applicants also responded to the rejection of record.

The examiner mailed a Final Office action to applicants on September 15, 2006, discussing the Lack of Unity holding further and indicating the expansion of the compounds searched based on the compound elected. The objection to the claims as containing non-elected subject matter was maintained as was the rejection under 35 U.S.C. 112, first paragraph, as lacking enablement.

This petition was filed on September 27, 2006, traversing the Lack of Unity requirement. A response to the Office action was filed on November 3, 2006, but has not yet been considered by the examiner pending decision on this petition.

DISCUSSION

A review of the claims, as filed, shows that they are directed to compounds based on the following structure:

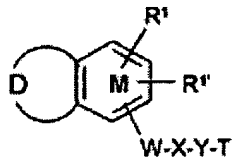

Each of the variables is defined (or in some cases may be absent). It is noted that each element of the above structure is a variable. For instance, D is defined as absent or 3-4 member alkylene chain with 1-3 members being replaced by N, O or S and may be substituted; M is a phenyl ring which may contain 1-2 N, O or S atoms; R^1 and $R^{1'}$ may be H, halogen, or various other substituents; W is a mono- or bi-cyclic saturated or aromatic carbocyclic or heterocyclic ring having 1-4 N, O or S atoms; X is $CONR^2$ or similar substituents; Y is alkylene, cycloalkylene, aromatic-diyl; or heteroaromatic-diyl; and T is a mono- or bi-cyclic saturated or aromatic carbocyclic or heterocuyclic ring having 1-4 N, O or S atoms and other substituents on the ring. From the above it can be seen that there is no significant structural feature common to all compounds and therefore, Unity is lacking, *pro forma*. (See PCT Administrative Instructions, Chapter 10, Example 24.)

Claim 1, as noted, sets forth the definition of the various elements of Formula I and claims 2-24 set forth more limited definitions of one, or in some cases more than one, of the variables, but in no instance can a single significant structural element be determined which would form the basis for finding Unity among a group of compounds. Claim 25, however, sets forth 24 specific compounds, all but two of which are 5-trifluoromethyl-2H-pyrazole-3-carboxamides. The examiner set forth several representative examples from this claim as Lacking Unity and required election therebetween. Such was improper as this equated to an election of species requirement. Upon election, however, the examiner did set forth definitions of the variables as where D is absent, M is a phenyl ring, W is pyrazole bonded to the phenyl ring at the 1-position, R^1 is CH_2NH_2 bonded meta to the pyrazole ring and X is CONH which is in general accordance with the species set froth in Claim 25 and created a structure which constitutes a significant structural element. Based on this it appears the examiner has considered the 5-trifluoromethyl-2H-pyrazole-3-carboxamide as the base structure providing the required significant structural element for Unity. Thus Groups I-VI appear to have been, at least, informally considered together.

Applicants argue that the examiner has not considered section (f) of Annex B with respect to determining Lack of Unity. Annex B has now been incorporated into Chapter 10 of the Administrative PCT manual. No substantive changes were made due to this incorporation. Applicants argue that all compounds encompassed within the claims have a common property. No disagreement with this statement is made. However, applicants' argument that all compounds encompassed within Claim 1 possess a significant structural element is not valid. As the examiner has noted, Example 24 addresses claims containing Markush groups defined by a series of variables, as here, and indicated that there cannot be Unity as there is no common structure. In essence, claim 1 contains numerous significant structural elements which may have Unity with respect to a number of compounds encompassed within the claim, but not with each other. The only compounds initially set forth in the claims having a semblance of Unity are those set forth in Claim 25 which, as noted above, have been or are rejoined as possessing Unity.

The examiner should determine whether any added claims also possess Unity with the compounds of Claim 25 and include them with the claims examined. Applicants should cancel subject matter from the claims which does not have Unity with the above determined significant structural element.

DECISION

The petition is **GRANTED-IN-PART** in that the 5-trifluoromethyl-2H-pyrazole-3-carboxamides of claim 25 are found to possess Unity and have been or will be examined fully.

The application will be forwarded to the examiner for consideration of applicants' reply filed November 3, 2006, and further action not inconsistent with this decision.

Should there be any questions about this decision please contact William R. Dixon, Jr., by letter addressed to Director, TC 1600, at the address listed above, or by telephone at 571-272-0519 or by facsimile sent to the general Office facsimile number, 571-273-8300.

George C. Elliott

George C. Elliott.
Director, Technology Center 1600

UNITED STATES PATENT AND TRADEMARK OFFICE

UNITED STATES DEPARTMENT OF COMMERCE
United States Patent and Trademark Office
Address: COMMISSIONER FOR PATENTS
P.O. Box 1450
Alexandria, Virginia 22313-1450
www.uspto.gov

KENYON & KENYON LLP
ONE BROADWAY
NEW YORK, NY 10004

Mail Date: 04/21/2010

Applicant	: Erwin Lock	: DECISION ON REQUEST FOR
Patent Number	: 7630817	: RECALCULATION of PATENT
Issue Date	: 12/08/2009	: TERM ADJUSTMENT IN VIEW
Appliction No	: 10/519,369	: OF WYETH AND NOTICE OF INTENT TO
Filed	: 09/08/2005	: ISSUE CERTIFICATE OF CORRECTION
		:

The Request for Recalculation is **GRANTED** to the extent indicated.

The patent term adjustment has been determined to be **406** days. The USPTO will *sua sponte* issue a certificate of correction reflecting the amount of PTA days determined by the recalculation.

Prior to the issuance of the certificate of correction, the USPTO will afford patentee an opportunity to be heard and request reconsideration. Accordingly, patentee has **one month or thirty (30) days**, whichever is longer, to file a request for reconsideration of this patent term adjustment calculation. See 35 U.S.C. 154(b)(3)(B)(ii) and 37 CFR 1.322(a)(4). No extensions of time will be granted under 37 CFR 1.136.

Patentee should use document code PET.OP if electronically filing a request for reconsideration of this patent term adjustment calculation. The patentee must also include the information required by 37 CFR 1.705(b)(2) and the fee required by 37 CFR 1.18(e). If patentee does not file a timely request for reconsideration of this patent term adjustment calculation including the information required by 37 CFR 1.705(b)(2) and the fee required by 37 CFR 1.18(e), the USPTO will issue a certificate of correction reflecting the PTA determination noted above.

Patentee should be aware that in order to preserve the right to review in the United States District Court for the District of Columbia of the USPTO patent term adjustment determination, patentee must ensure that he or she also take the steps required under 35 U.S.C. 154(b)(4)(A) in a timely manner. Nothing in the request for recalculation should be construed as providing an alternative time frame for commencing a civil action under 35 U.S.C. 154(b)(4)(A).

Any questions concerning this decision should be directed to the Office of Patent Legal Administration at 571-272-7702.

06 MAY 2005

#3

UNITED STATES PATENT AND TRADEMARK OFFICE

COMMISSIONER FOR PATENTS
UNITED STATES PATENT AND TRADEMARK OFFICE
P.O. BOX 1450
ALEXANDRIA, VA 22313-1450
www.uspto.gov

Henry E. Millson
675 Golden Hawk Drive
Prescott, Arizona 86301-6623

In re Application of PRECOPIO, Michael Application No.: 10/519,372 Filing Date: 23 December 2004 Attorney Docket No.: SU103 For: METHODS FOR TREATING ECTOPARASITE INFECTIONS ON THE MAMMALIAN BODY	:	DECISION ON PETITION UNDER 37 CFR 1.182

This communication is in response to applicant's "Petition to the PCT Legal Staff" filed in the United States Patent and Trademark Office on 23 February 2005, which is being treated as a Petition under 37 CFR 1.182.

BACKGROUND

On 23 December 2004, applicant filed a Transmittal Letter to the United States Designated/Elected Office Concerning a Filing Under 35 U.S.C. 371 (Form PTO-1390) requesting processing of the instant application as a national stage application of an international application under 35 U.S.C. § 371 accompanied by: a declaration; an assignment; a description, claims, abstract and drawings. However, the Transmittal Letter did not identify the international application (by application number) of which the instant application papers are to be treated as the national stage. The papers submitted 23 December 2004 have been assigned application number 10/519,372.

On 23 February 2005, applicant filed "Petition to the PCT Legal Staff" which indicated that, "applicant herewith petitions the PCT Legal Staff to convert the above application mistakenly submitted under 35 U.S.C. 371 to a regular United States patent application (under 35 U.S.C. 111(a)) for a United States utility Letter Patent."

DISCUSSION

As stated above, the Transmittal Letter did not identify the international application (by application number) of which the instant application papers are to be treated as the national stage, therefore, this application cannot presently be processed under 35 U.S.C. 371. However, the transmittal letter of 23 December 2004 was clearly an application for a United States patent. Applicant erred in identifying the application as a national stage application. The application papers contained all the elements necessary to obtain a filing date under 35 U.S.C. 111(a) and 37 CFR 1.53(b). Since applicant cannot proceed under 35

U.S.C. 371 and applicant has filed the necessary papers under 35 U.S.C. 111(a), it is appropriate in this instance to grant applicant's petition, construed as a petition under 37 CFR 1.182, to accept the papers filed on 23 December 2004 as an application filed under 35 U.S.C. 111(a).

CONCLUSION

As so construed, the above-noted petition is **GRANTED**.

This application is being forwarded to the Office of Initial Patent Examination for processing as an application filed under 35 U.S.C. 111(a) with a filing date of 23 December 2004.

Anthony Smith
Attorney-Advisor
Office of PCT Legal Administration
Telephone: (571) 272-3298
Facsimile: (571) 273-0459

UNITED STATES PATENT AND TRADEMARK OFFICE

Commissioner for Patents
United States Patent and Trademark Office
P.O. Box 1450
Alexandria, VA 22313-1450
www.uspto.gov

COHEN, PONTANI, LIEBERMAN & PAVANE
551 FIFTH AVENUE, SUITE 1210
NEW YORK NY 10176

COPY MAILED

OCT 19 2007

OFFICE OF PETITIONS

In re Application of	:	
SCHMIDHAMMER, et al.	:	
Application No. 10/519,388	:	DECISION GRANTING PETITION
Filed: March 17, 2005	:	UNDER 37 CFR 1.313(c)(2)
Attorney Docket No. **1739-10PUS**	:	

This is a decision on the petition under 37 CFR 1.313(c)(2), filed October 11, 2007, to withdraw the above-identified application from issue after payment of the issue fee.

The petition is **GRANTED.**

The above-identified application is withdrawn from issue for consideration of a submission under 37 CFR 1.114 (request for continued examination). *See* 37 CFR 1.313(c)(2).

Petitioner is advised that the issue fee paid on September 13, 2007 ***cannot be refunded. If, however, this application is again allowed, petitioner may request that it be applied towards the issue fee required by the new Notice of Allowance.***[1]

Telephone inquiries should be directed to Monica A. Graves at (571) 272-7253.

This application is being referred to Technology Center AU 1625 for processing of the request for continued examination under 37 CFR 1.114 and for consideration of the concurrently filed information disclosure statement.

Karen Creasy for
Frances Hicks
Petitions Examiner
Office of Petitions

---

[1] *The request to apply the issue fee to the new Notice may be satisfied by completing and returning the new Part B – Fee(s) Transmittal Form (along with any balance due at the time of submission). Petitioner is advised that the Issue Fee Transmittal Form* ***must*** *be completed and timely submitted to avoid abandonment of the application.*

UNITED STATES PATENT AND TRADEMARK OFFICE

Commissioner for Patents
United States Patent and Trademark Office
P.O. Box 1450
Alexandria, VA 22313-1450
www.uspto.gov

BELL, BOYD & LLOYD, LLP
P.O. Box 1135
CHICAGO, IL 60690

COPY MAILED

SEP 2 5 2008

OFFICE OF PETITIONS

In re Application of
Seungbae Park
Application No. 10/519,389
Filed: December 23, 2004
Attorney Docket No. 114260-013

DECISION ON PETITION
UNDER 37 CFR 1.313(c)(1)

This is a decision in response to the petition, filed September 24, 2008, which is being treated as a petition under 37 CFR 1.313(c) to withdraw the above-identified application from issue after payment of the issue fee.

The petition is **DISMISSED**.

Petitioner indicates that the issue fee was paid by mistake and requests that the application be withdrawn from issue. It is noted that the issue fee was owed and required by law at the time of payment. Therefore, payment was not made by mistake or in excess of that required as contemplated by 37 CFR 1.26.

37 CFR 1.313(c) provides that:

Once the issue fee has been paid, the application will not be withdrawn from issue upon petition by the applicant for any reason except:

(1) Unpatentability of one of more claims, which petition must be accompanied by an unequivocal statement that one or more claims are unpatentable, an amendment to such claim or claims, and an explanation as to how the amendment causes such claim or claims to be patentable;

(2) Consideration of a request for continued examination in compliance with 37 CFR 1.114; or

(3) Express abandonment of the application. Such express abandonment may be in favor of a continuing application.

The circumstances of the above-identified application do not fall within any of the exceptions noted above. Accordingly, the petition under 37 CFR 1.313(c) cannot be granted.

Petitioner is reminded that the filing of any renewed petition to withdraw from issue may not be recognized or effective if not received by the appropriate deciding official in time to act prior to issuance. *Note* 37 CFR 1.313(d). Therefore, if petitioner can comply with the requirements of 37 CFR 1.313(c) and desires to file a renewed petition, it is recommended that the facsimile number listed below be used.

Further correspondence with respect to this matter should be addressed as follows:

By mail: Mail Stop PETITIONS
Commissioner for Patents
Post Office Box 1450
Alexandria, VA 22313-1450

By hand: Customer Service Window
Mail Stop Petitions
Randolph Building
401 Dulany Street
Alexandria, VA 22314

By fax: **(571) 273-0025**
Office of Petitions

Any questions concerning this matter may be directed to the undersigned at (571) 272-3204.

/SDB/

Sherry D. Brinkley
Petitions Examiner
Office of Petitions

22 SEP 2005

#3

UNITED STATES PATENT AND TRADEMARK OFFICE

COMMISSIONER FOR PATENTS
UNITED STATES PATENT AND TRADEMARK OFFICE
P.O. BOX 1450
ALEXANDRIA, VA 22313-1450
www.uspto.gov

Shuya Huo
30 N. 13 STREET
APT. 8
SAN JOSE, CA 95112

In re Application of SHUYA Application No.: 10/519,393 PCT Application No.: PCT/US03/11320 Int. Filing Date: 14 April 2003 Priority Date Claimed: 16 April 2002 For: AN ELECTRONIC INFORMATION ITEM SELECTION FOR TRADE AND TRADED ITEM CONTROL DELIVERY SYSTEM	DECISION ON PETITION UNDER 37 CFR 1.137(a)

This is in response to applicant's Petition For Revival Under 37 CFR 1.137(a), filed in the United States Patent and Trademark Office on 21 December 2004 is **DISMISSED**.

BACKGROUND

On 14 April 2003, applicant filed international application PCT/US03/11320. The international application claims a priority date of 16 April 2002 and designates the United States. A copy of the international application was communicated to the United States Patent and Trademark Office from the International Bureau on 30 October 2003. The deadline for paying the basic national fee in the United States is thirty months from the priority date, that is 16 October 2004. The application became abandoned at midnight 16 October 2004 for failure to pay the national basic fee.

On 21 December 2004, applicant filed the instant petition for revival accompanied by, *inter alia*, a transmittal letter for entry into the US national stage under 35 U.S.C. 371, a basic national fee of $100, a copy of the international application as required by 35 U.S.C. 371(c)(2), an executed declaration as required by 35 U.S.C. 371(c)(4), and a petition fee of $65.

DISCUSSION

37 CFR 1.137(a), Revival of abandoned application or lapsed patent, in part, states:

> Where the delay in reply was unavoidable, a petition may be filed to revive an abandoned application or a lapsed patent pursuant to this paragraph. A grantable petition pursuant to this paragraph must be accompanied by:
>
> (1) The required reply, unless previously filed. In a nonprovisional application abandoned for failure to prosecute, the required reply may be met by the filing of a continuing application. In an application or patent, abandoned or lapsed for failure to pay the issue fee or any portion thereof, the required reply must be the payment of the issue fee or any outstanding balance thereof;
>
> (2) The petition fee as set forth in § 1.17(l);
>
> (3) A showing to the satisfaction of the Commissioner that the entire delay in filing the required reply from the due date for the reply until the filing of a grantable petition pursuant to this paragraph was unavoidable; and
>
> (4) Any terminal disclaimer (and fee as set forth in § 1.20(d)) required pursuant to paragraph (c) of this section.

Applicant has satisfied item (4), since the application was filed after 08 June 1995, a terminal disclaimer is not required.

As to item (1), a copy of the international application has been filed; however, the required basic national fee has not been paid. A basic national fee of $100 was received; however, the required basic national fee which is due by applicant is $150; see Fee Code 2631, effective 08 December 2004. Thus, applicant has not met the requirement under 37 CFR 1.137(a)(1).

As to item (2), the petition fee of $65 was received; however, the required petition fee which is due by applicant is $250; see Fee Code 2452, effective 08 December 2004. Thus, applicant has not met the requirement under 37 CFR 1.137(a)(2).

As to item (3), applicant's petition states that:

> "The time I was first notified by my patent attorney for the Preliminary Examination Report (which was received by the law office on Sept. 9, 2004) and the official publication of my PCT application (which was published in October of 2003 and was received by the law office on Nov. 1, 2003) was on November 29, 2004 – It is already one month passed the 30 month deadline required by PCT Rule. I have two email account open to keep communication with the attorney although one of them is shut off by August this year, but I never receive any notice about the above important events until Nov. 29, 2004. I now decide to

> submit the National Stage documents and proceed with your authority directly on my own."

Upon review of the above-captioned application shows that the 30-month deadline for entering the national stage expired on 16 October 2004. Applicant failed to file national stage papers until 21 December 2004.

An applicant for patent is solely responsible for meeting all applicable deadlines. As stated in MPEP 711.03(c)(II)(C)(2):

> Delay resulting from the lack of knowledge or improper application of the patent statute, rules of practice or the MPEP, however, does not constitute "unavoidable" delay. See *Haines*, 673 F. Supp. at 317, 5 USPQ2d at 1132; *Vincent v. Mossinghoff*, 230 USPQ 621, 624 (D.D.C. 1985); *Smith v. Diamond*, 209 USPQ 1091 (D.D.C. 1981); *Potter v. Dann*, 201 USPQ 574 (D.D.C. 1978); *Ex parte Murray*, 1891 Dec. Comm'r Pat. 130, 131 (1891).

Furthermore, applicant has not presented any evidence concerning the procedures in place that should have avoided the error resulting in the delay; evidence concerning the training and experience of the persons responsible for the error; and copies of any applicable docketing records to show that the error was in fact the cause of the delay.

It is recommended that petitioner obtain relief by filing a request for reconsideration pursuant to 37 CFR 1.137(b) on the basis of unintentional delay. A grantable petition under 37 CFR 1.137(b) must be accompanied by: (1) a proper reply, (2) the petition fee required by law, (3) a statement that the entire delay in filing the required reply from the due date for the reply until the filing of a grantable petition was unintentional, and (4) a terminal disclaimer and fee (if the international application was filed prior to June 8, 1995). A payment of the basic national fee constitutes a proper reply for entry into the national stage.

CONCLUSION

The petition to revive the application abandoned under 37 CFR 1.137(a) is **DISMISSED** without prejudice as to the National Stage in the United States of America.

Any request for reconsideration of this decision must be submitted within **TWO (2) MONTHS** from the mailing date of this Decision. Applicant can submit appropriate evidence in accordance with 37 CFR 1.137 (a) or to request other appropriate relief, e.g. a petition to revive under 37 CFR 1.137(b). The reconsideration request should include a cover letter entitled "Renewed Petition under 37 CFR 1.137(a)" or "Petition under 37 CFR 1.137(b)", as appropriate.

Extensions of time may be obtained under 37 CFR 1.136(a).

Any future correspondence with respect to this matter should be directed to the Commissioner for Patents, Mail Stop PCT, P.O. Box 1450, Alexandria, VA 22313-1450, and with the contents of the letter directed to the attention of the PCT Legal Office.

Helen Kwok
PCT Legal Administration Detailee
Telephone: 571-272-6095
Facsimile: 571-273-0459

Richard Cole
PCT Legal Examiner
Office of PCT Legal Administration

02 AUG 2006

UNITED STATES PATENT AND TRADEMARK OFFICE

COMMISSIONER FOR PATENTS
UNITED STATES PATENT AND TRADEMARK OFFICE
P.O. BOX 1450
ALEXANDRIA, VA 22313-1450
www.uspto.gov

Shuya Huo
c/o Allison Huo
30 N. 13th St., Apt. #8
San Jose, CA 95112

In re Application of: HUO, Shuya Application No.: 10/519,393 PCT Application No.: PCT/US03/11320 Int. Filing Date: 14 April 2003 Priority Date Claimed: 16 April 2002 For: ELECTRONIC INFORMATION ITEM SELECTION FOR TRADE AND TRADED ITEM CONTROL DELIVERY SYSTEM	DECISION ON PETITION UNDER 37 CFR 1.137(a)

This decision is in response to the letter received on 28 November 2005, which is being treated as a Renewed Petition for Revival of an International Application for Patent Designating the U.S. Abandoned Unavoidably under 37 CFR 1.137(a). The petition is **DISMISSED**.

BACKGROUND

On 14 April 2003, applicant filed international application PCT/US03/11320 which claims a priority date of 16 April 2002 and designates the United States. A copy of the international application was communicated to the United States Patent and Trademark Office from the International Bureau on 30 October 2003. The deadline for paying the basic national fee in the United States was thirty months from the priority date, that is, 16 October 2004. The application became abandoned at midnight 18 October 2004 (16 October 2004 being a Saturday) for failure to pay the basic national fee.

On 21 December 2004, applicant filed a Petition for Revival of an International Application for Patent Designating the U.S. Abandoned Unavoidably under 37 CFR 1.137(a) accompanied by, *inter alia*, a transmittal letter for entry into the US national stage under 35 U.S.C. 371, a copy of the international application, an executed declaration, and a money order in the amount of $115.

On 22 September 2005, the petition was dismissed because (1) applicant had failed to pay the basic national filing fee of $150, effective 08 December 2004, (2) the applicant had failed to pay the petition fee of $250 as set forth in § 1.17(l), effective 08 December 2004, and (3) the applicant had failed to show that the entire delay in filing the required reply from the due date for the reply until the filing of a grantable petition pursuant to this paragraph was unavoidable.

On 28 November 2005, applicant filed the current communication accompanied by, *inter alia*, a check for $235.

DISCUSSION

37 CFR 1.137(a), governing the revival of abandoned applications under the *unavoidable* standard, states:

> A grantable petition pursuant to this paragraph must be accompanied by:
>
> (1) The reply required to the outstanding Office action or notice, unless previously filed;
>
> (2) The petition fee as set forth in § 1.17(l);
>
> (3) A showing to the satisfaction of the Director that the entire delay in filing the required reply from the due date for the reply until the filing of a grantable petition pursuant to this paragraph was unavoidable; and
>
> (4) Any terminal disclaimer (and fee as set forth in § 1.20(d)) required pursuant to paragraph (d) of this section.

Applicant has satisfied item (4), since a terminal disclaimer is not required for a utility application filed after 08 June 1995.

As to item (1), a copy of the international application has been filed; however, the required basic national fee has not been paid. A money order for $115 was received; however, the basic national fee due from applicant is $150; see Fee Code 2631, effective 08 December 2004. Thus, applicant has not met the requirement under 37 CFR 1.137(a)(1). $100 of the initial payment of $115 has been credited toward payment of the basic national fee, leaving a balance due of $50.

As to item (2), the decision of 22 September 2005 indicated that a petition fee of $65 was received; however, the fee history of the application fails to indicate receipt of the petition fee. Furthermore, the required petition fee due from the applicant is $250; see Fee Code 2452, effective 08 December 2004. Since the fee history indicates an initial payment of $115, the payment of $235 on 28 November 2005, in combination with $15 of the initial payment of $115, is sufficient to meet the requirement under 37 CFR 1.137(a)(2) for the petition fee as set forth in § 1.17(l). The balance of the initial payment is credited toward payment of the basic national fee, as indicated in the above paragraph.

As to item (3), this application became abandoned for failure to pay the basic national fee prior to thirty months from the priority date, i.e., prior to midnight 18 October 2004 (16 October 2004 being a Saturday). Petitioner states that Mark McCabe and Tarek Fahmi of the law office of Blakely, Sokoloff, Taylor & Zafman LLP were employed to handle all patent matters before the Office and that petitioner was not notified by counsel of the International Preliminary

Examination Report until 29 November 2004. Petitioner further states that Mr. Fahmi indicated to the applicant via email that December 15 was the deadline for filing the national stage application. Petitioner provides copies of email correspondence from Tarek Fahmi dated 03 December 2004 and 30 November 2004 indicating December 15 as the filing deadline for the national stage application.

The Patent and Trademark Office must rely on the actions or inactions of duly authorized and voluntarily chosen representatives of the applicant, and applicant is bound by the consequences of those actions or inactions. *Link v. Wabash*, 370 U.S. 626, 633-34 (1962). Specifically, petitioner's delay caused by the mistakes or negligence of his voluntarily chosen representative does not constitute unavoidable delay within the meaning of 35 USC 133 or 37 CFR 1.137(a). *Haines v. Quigg*, 673 F. Supp. 314, 5 USPQ2d 1130 (D. Ind. 1987); *Smith v. Diamond*, 209 USPQ 1091 (D.D.C. 1981); *Potter v. Dann*, 201 USPQ 574 (D.D.C. 1978); *Ex parte Murray*, 1891 Dec. Comm'r Pat. 130, 131 (Comm'r Pat. 1891).

Hence, petitioner's delay caused by either the belated notification to the applicant by counsel of the International Preliminary Examination Report or the miscalculation by counsel of the deadline for filing the national stage application, does not constitute unavoidable delay within the meaning of 35 USC 133 or 37 CFR 1.137(a). While the Notification of Transmittal of the International Preliminary Examination Report (PCT/IPEA/416) reminds the applicant of the need to perform certain acts within the applicable time limit in order to enter the national phase, the acts and time limit for entering the national phase in the United States are set by 37 CFR 1.495. The Notification serves merely as a reminder to the applicant of the applicant's responsibility. The applicant is responsible for meeting the applicable deadline, regardless of whether the applicant has timely received a reminder to do so. While the miscalculation by counsel of the deadline may have contributed to the delay in paying the US basic national fee, there is no showing of record that the error in calculation was due to unavoidable causes. Accordingly, the petitioner has failed to meet his burden of establishing an unavoidable cause of the delay.

An adequate showing of unavoidable delay must include a showing from counsel as to why action was not taken to prevent the application from becoming abandoned while the application was under his control. Petitioner should send a letter (accompanied by a copy of this decision) to Tarek Fahmi by registered or certified mail, return receipt requested, indicating to counsel that the PTO is requesting his assistance in determining the circumstances surrounding the abandonment of this application, and is specifically requesting that he provide a statement as to (1) what procedures were in place to ensure that the national stage application be timely filed, (2) how December 15 became identified as the deadline for filing the national stage application, (3) when counsel first became aware of the true deadline for filing the national stage application, and (4) what steps were taken upon realizing that the deadline for filing the national stage application had expired. Such statement should be accompanied by copies of any documents (e.g., docket records) relevant to the procedures in place to ensure that the national stage application be timely filed. In the event that counsel fails to provide a statement within a period (e.g., within one (1) month) specified in such letter, petitioner should submit a copy of such letter and the return receipt indicating its delivery to counsel with any renewed petition under 37 CFR 1.137(a).

Petitioner may yet obtain relief by filing a petition for revival on the basis of unintentional delay pursuant to 37 CFR 1.137(b). A grantable petition under 37 CFR 1.137(b) must be accompanied by: (1) a proper reply, (2) the petition fee required by law, (3) a statement that the entire delay in filing the required reply from the due date for the reply until the filing of a grantable petition was unintentional, and (4) a terminal disclaimer and fee (if the international application was filed prior to June 8, 1995). Full payment of the basic national fee constitutes a proper reply for entry into the national stage. A blank form for a Petition for Revival of an International Application for Patent Designating the U.S. Abandoned Unintentionally under 37 CFR 1.137(b) (PTO/SB/64/PCT) is attached for applicant's convenience.

CONCLUSION

The petition for revival of an international application abandoned unavoidably under 37 CFR 1.137(a) is **DISMISSED** as to the national stage in the United States of America.

Any request for reconsideration of this decision must be submitted within **TWO (2) MONTHS** from the mailing date of this Decision. Applicant can submit appropriate evidence in accordance with 37 CFR 1.137(a) or request other appropriate relief, e.g. a petition to revive under 37 CFR 1.137(b). The reconsideration request should include a cover letter entitled "Renewed Petition under 37 CFR 1.137(a)" or "Petition under 37 CFR 1.137(b)," as appropriate. Extensions of time under 37 CFR 1.136(a) are available.

Please direct further correspondence with respect to this matter to Mail Stop PCT, Commissioner for Patents, Office of PCT Legal Administration, P.O. Box 1450, Alexandria, Virginia 22313-1450, with the contents of the letter marked to the attention of the Office of PCT Legal Administration.

John Chapman
PCT Legal Administration Detailee
Telephone: 571-272-6095
Facsimile: 571-273-0459

Richard Cole
PCT Legal Examiner
Office of PCT Legal Administration

Attachment: Petition for Revival of an International Application for Patent Designating the U.S. Abandoned Unintentionally under 37 CFR 1.137(b) (PTO/SB/64/PCT).

#11

UNITED STATES PATENT AND TRADEMARK OFFICE

Commissioner for Patents
United States Patent and Trademark Office
P.O. Box 1450
Alexandria, VA 22313-1450
www.uspto.gov

14 SEP 2006

Shuya Huo
c/o Allison Huo
30 N. 13th St. Apt. #8
San Jose CA 95112

In re Application of SHUYA HUO Application No.: 10/519,393 PCT No.: PCT/US03/11320 Int. Filing: 14 April 2003 Priority Date: 16 April 2002 Attorney Docket No.: None For: AN ELECTRONIC INFORMATION ITEM SELECTION FOR TRADE AND TRADED ITEM CONTROL DELIVERY SYSTEM	DECISION ON PETITION TO REVIVE UNDER 37 CFR 1.137(b)

The petition to revive under 37 CFR 1.137(b) filed 11 September 2006 in the above-captioned application is hereby **GRANTED** as follows:

Applicant's statement that the "entire delay in filing the required reply from the due date for the required reply until the filing of a grantable petition under 37 CFR 1.137(b) was unintentional" meets the requirements of 37 CFR 1.137(b)(3).

A review of the application file reveals that the basic national fee of $150 has now been provided. The required petition fee of $750 was also paid. Thus, the requirements of 37 CFR 1.137(b) have been satisfied. Therefore, the request to revive the application abandoned under 35 U.S.C. 371(d) is granted as to the National stage in the United States of America.

This application is being forwarded to the United States Designated/Elected Office for further processing, including issuance of a Notification of Missing Requirements indicating that an oath or declaration, in compliance with 37 CFR 1.497(a) and (b) and the $130 surcharge for filing the oath or declaration after the thirty month period, is required.

Cynthia M. Kratz

Cynthia M. Kratz
Attorney Advisor
PCT Legal Office
Office of PCT Legal Administration

Telephone: (571) 272-3286
Facsimile: (571) 273-0459

UNITED STATES PATENT AND TRADEMARK OFFICE

UNITED STATES DEPARTMENT OF COMMERCE
United States Patent and Trademark Office
Address: COMMISSIONER FOR PATENTS
P.O. Box 1450
Alexandria, Virginia 22313-1450
www.uspto.gov

BROWDY AND NEIMARK, P.L.L.C.
624 NINTH STREET, NW
SUITE 300
WASHINGTON, DC 20001-5303

Mail Date: 04/21/2010

Applicant	: Wolfgang Knecht	: DECISION ON REQUEST FOR
Patent Number	: 7666639	: RECALCULATION of PATENT
Issue Date	: 02/23/2010	: TERM ADJUSTMENT IN VIEW
Appliction No	: 10/519,395	: OF WYETH AND NOTICE OF INTENT TO
Filed	: 10/07/2005	: ISSUE CERTIFICATE OF CORRECTION
		:

The Request for Recalculation is **GRANTED** to the extent indicated.

The patent term adjustment has been determined to be **464** days. The USPTO will *sua sponte* issue a certificate of correction reflecting the amount of PTA days determined by the recalculation.

Prior to the issuance of the certificate of correction, the USPTO will afford patentee an opportunity to be heard and request reconsideration. Accordingly, patentee has **one month or thirty (30) days**, whichever is longer, to file a request for reconsideration of this patent term adjustment calculation. See 35 U.S.C. 154(b)(3)(B)(ii) and 37 CFR 1.322(a)(4). No extensions of time will be granted under 37 CFR 1.136.

Patentee should use document code PET.OP if electronically filing a request for reconsideration of this patent term adjustment calculation. The patentee must also include the information required by 37 CFR 1.705(b)(2) and the fee required by 37 CFR 1.18(e). If patentee does not file a timely request for reconsideration of this patent term adjustment calculation including the information required by 37 CFR 1.705(b)(2) and the fee required by 37 CFR 1.18(e), the USPTO will issue a certificate of correction reflecting the PTA determination noted above.

Patentee should be aware that in order to preserve the right to review in the United States District Court for the District of Columbia of the USPTO patent term adjustment determination, patentee must ensure that he or she also take the steps required under 35 U.S.C. 154(b)(4)(A) in a timely manner. Nothing in the request for recalculation should be construed as providing an alternative time frame for commencing a civil action under 35 U.S.C. 154(b)(4)(A).

Any questions concerning this decision should be directed to the Office of Patent Legal Administration at 571-272-7702.

08 SEP 2005

#4

UNITED STATES PATENT AND TRADEMARK OFFICE

Commissioner for Patents
United States Patent and Trademark Office
P.O. Box 1450
Alexandria, VA 22313-1450
www.uspto.gov

Bruce S. Londa
Norris McLaughlin & Marcus
875 Third Avenue, 18th Floor
New York, New York 10022

In re Application of
TATARSKY, Valeriy
Application No.: 10/519,419
PCT No.: PCT/EP02/07299
Int. Filing Date: 02 July 2002
Priority Date: 03 July 2001
Attorney Docket No.: 101215-170
For: ORGANOMETALLIC ANTI-TUMOR AGENT

DECISION ON PETITION
UNDER 37 CFR 1.137(b)

The petition to revive under 37 CFR 1.137(b) filed 22 December 2004 in the above-captioned application is hereby **GRANTED** as follows:

Applicant's statement that "the entire delay in filing the required reply from the due date for the reply until the filing of a grantable petition under 37 CFR 1.137(b) was unintentional" meets the requirements of 37 CFR 1.137(b)(3).

A review of the application file reveals that applicant has submitted the basic national fee and the requirements of 37 CFR 1.137(b) have been satisfied. Therefore, the request to revive the application abandoned under 35 U.S.C. 371(d) is granted as to the National stage in the United States of America.

This application is being returned to the United States Designated/Elected Office for processing in accordance with this decision.

Anthony Smith

Anthony Smith
Attorney-Advisor
Office of PCT Legal Administration
Tel.: 571-272-3298
Facsimile: 571-273-0459

UNITED STATES PATENT AND TRADEMARK OFFICE

Commissioner for Patents
United States Patent and Trademark Office
P.O. Box 1450
Alexandria, VA 22313-1450
www.uspto.gov

PHILIP S. JOHNSON
JOHNSON & JOHNSON
ONE JOHNSON & JOHNSON PLAZA
NEW BRUNSWICK NJ 08933-7003

COPY MAILED

JAN 3 1 2007

OFFICE OF PETITIONS

In re Application of	:	
Azjin et al.	:	
Application No. 10/519,436	:	ON PETITION
Filed: December 22, 2004	:	
Attorney Docket No. TIP0015USPCT	:	

This is a decision on the petition under 37 C.F.R. § 1.137(b), filed December 20, 2006, to revive the above-identified application.

The petition is **GRANTED.**

The petition satisfies the conditions for revival pursuant to the provisions of 37 CFR 1.137(b) in that (1) the reply in the form of an Amendment; (2) the petition fee; and (3) the required statement of unintentional delay have been received. Accordingly, the response has been accepted as having been unintentionally delayed.

This matter is being referred to Technology Center 1600 for further examination on the merits.

Telephone inquiries regarding this decision should be directed to the undersigned at (571) 272-3206.

Liana Walsh
Petitions Examiner
Office of Petitions

UNITED STATES PATENT AND TRADEMARK OFFICE

Commissioner for Patents
United States Patent and Trademark Office
P.O. Box 1450
Alexandria, VA 22313-1450
www.uspto.gov

28 DEC 2005

DICKE, BILLIG & CZAJA, PLLC
Fifth Street Towers
100 South Fifth Street
Minneapolis, MN 55402

In re Application of	:	
THOMAS, Jochen, et. al.	:	
Application No.: 10/519,444	:	DECISION
PCT No.: PCT/DE03/02162	:	
Int. Filing Date: 30 June 2003	:	
Priority Date: 01 July 2002	:	
Attorney's Docket No.: I431.123.101/FIN 393 PCT/US	:	
For: ELECTRONIC COMPONENT COMPRISING A	:	
MULTILAYER WIRING FRAME AND	:	
METHOD FOR PRODUCING SAME	:	

This decision is in response to applicants' "Request For Corrected Filing Receipt" filed 26 October 2005 (and resubmitted via facsimile on 22 December 2005) seeking correction of the name of one of the applicants and the title of the application.

BACKGROUND

On 30 June 2003, applicants filed international application PCT/DE03/02162 which claimed a priority date of 01 July 2002 and which designated the United States. On 08 January 2004, a copy of the international application was communicated to the United States Patent And Trademark Office ("USPTO") by the International Bureau ("IB"). The deadline for payment of the basic national fee was thirty months after the priority date, i.e. 01 January 2005.

On 29 December 2004, applicant filed a transmittal letter for entry into the national stage in the United States accompanied by, among other materials, payment of the basic national fee.

On 28 June 2005, the United States Designated/Elected Office (DO/EO/US) mailed a Notification Of Missing Requirements (Form PCT/DO/EO/905) requiring submission of an oath or declaration in compliance with 37 CFR 1.497 and the surcharge for filing the oath or declaration later than thirty months after the priority date.

On 26 August 2005, applicants filed a response to the Notification Of Missing Requirements, including an executed declaration and the surcharge payment.

On 06 October 2005, the DO/EO/US mailed a Notification Of Acceptance (Form PCT/DO/EO/903) indicating that the requirements of 35 U.S.C. 371(c)(1), (c)(2), and (c)(4) were satisfied as of 26 August 2005.

Also on 06 October 2005, the USPTO issued a filing receipt. The filing receipt identified the first applicant as Thomas Jochen, and listed the title of the application as "Electronic Component Comprising A Multilayer Rewiring Wiring Frame And Method For Producing Same." This is the English translation of the title set forth on the published international application (with the exception that the word "rewiring" has been added in an apparent data entry error).

On 26 October 2005, applicants filed the request for corrected filing receipt considered herein. The submission asks that the name of the first inventor be corrected to Jochen THOMAS, as listed on the published international application and in the declaration. Applicants' also ask that the title be corrected to "Electronic Component With Multilayered Rewiring Plate And Method For Producing The Same." This is the title set forth on the transmittal letter and specification filed by applicants on 29 December 2004, and on the declaration filed 26 August 2005.

DISCUSSION

With respect to the name of the first inventor, applicants' request that this name be corrected to match the inventor's name as set forth on the published international application and in the executed declaration is appropriately granted.

As for the title, section 1893.03(e)(1) of the Manual Of Patent Examining Procedure (MPEP) states the following regarding the title that the USPTO will use in national stage applications:

> [T]he Office will normally use the title of the invention indicated on the cover page of the publication as the title of the national stage application that will appear on the filing receipt. The cover page will include an English translation of the title if the international application was published in a foreign language. See PCT Rule 48.3 (c). Applicants desiring to have the filing receipt reflect a title that is different than the English language title appearing on the cover page must submit either a preliminary amendment amending the title or an application data sheet (37 CFR 1.76) with the desired title.

Here, pursuant to the policy set forth in the MPEP, the USPTO has assigned the national stage application the "title of the invention indicated on the cover page of the publication." Applicants have not filed either a preliminary amendment or an application data sheet (ADS) to

change the title. Accordingly, applicants' present request to modify the title of the present application cannot be granted on the present record.[1]

CONCLUSION

Applicants' request for a corrected filing receipt is **GRANTED** with respect to the request to correct the first inventor's name to Jochen THOMAS.

Applicant's request for a corrected filing receipt is **DISMISSED** without prejudice with respect to the request to correct the title of the application.

The title of record herein is "Electronic Component Comprising A Multilayer Wiring Frame And Method For Producing Same," the title of the invention indicated on the cover of the international publication.

A corrected filing receipt is issued herewith containing the correction in the first inventor's name and the removal of the typographical error contained in the title.

Richard Ross
Attorney Advisor
Office of PCT Legal Administration
Telephone: (571) 272-3296
Facsimile: (571) 273-0459

[1] The typographical error contained in the title listed on the filing receipt (as noted above) has been corrected.

15 SEP 2005

UNITED STATES PATENT AND TRADEMARK OFFICE

#3

COMMISSIONER FOR PATENTS
UNITED STATES PATENT AND TRADEMARK OFFICE
P.O. BOX 1450
ALEXANDRIA, VA 22313-1450
www.uspto.gov

YOUNG & THOMPSON
745 SOUTH 23RD STREET
2ND FLOOR
ARLINGTON, VA 22202

In re Application of TERZOLI	:	
U.S. Application No.: 10/519,458	:	
PCT Application No.: PCT/IT02/00097	:	
Int. Filing Date: 19 February 2002	:	
Priority Date Claimed: (none)	:	DECISION
Attorney Docket No.: 2507-1062	:	
For: IMPROVEMENT OF INTRA-VENOUS (I.V.) BLOOD CATHETER FOR SUBCUTANEOUS INFUSION OF LIQUIDS AND/OR DRUGS	:	

This is in response to applicant's "Petition to Revive Unintentionally Abandoned Application Under 37 CFR 1.137(b)" filed 29 December 2004.

BACKGROUND

On 19 February 2002, applicant filed international application PCT/IT02/00097. A copy of the international application was communicated to the USPTO from the International Bureau on 28 August 2003. The thirty-month period for paying the basic national fee in the United States expired on 19 August 2004.

International application PCT/IT02/00097 became abandoned as to the United States for failure to timely pay the basic national fee.

On 29 December 2004, applicant filed the present petition under 37 CFR 1.137(b).

DISCUSSION

Under 37 CFR 1.137(b), a petition requesting that an application be revived on the grounds of unintentional abandonment must be accompanied by: (1) the required reply unless previously filed, (2) the petition fee as set forth in 37 CFR 1.17(m), (3) a statement that the entire

delay in filing the required reply from the due date for the reply until the filing of a grantable petition was unintentional, and (4) a terminal disclaimer if the application was filed before 08 June 1995.

With regard to item (1), applicant has provided the required reply under 35 U.S.C. 371.

With regard to item (2), applicant has provided the required petition fee.

With regard to item (3), applicant has provided the required statement.

With regard to item (4), because the international application was filed after 08 June 1995, no terminal disclaimer is required.

CONCLUSION

For the reasons above, the petition under 37 CFR 1.137(b) is GRANTED.

The application has an International Filing Date under 35 U.S.C. 363 of 19 February 2002, and a date under 35 U.S.C. 371(c)(1), (c)(2), and (c)(4) of 29 December 2004.

This application is being forwarded to the United States Designated/Elected Office (DO/EO/US) for further processing in accordance with this decision.

Bryan Tung
PCT Legal Examiner
Office of PCT Legal Administration

Telephone: 571-272-3303
Facsimile: 571-273-0459

01 JUL 2005

UNITED STATES PATENT AND TRADEMARK OFFICE

COMMISSIONER FOR PATENTS
UNITED STATES PATENT AND TRADEMARK OFFICE
P.O. BOX 1450
ALEXANDRIA, VA 22313-1450
WWW.USPTO.GOV

c/o Shiboleth Yisraeli Roberts Zisman & Co
350 Fifth Avenue 60th Floor
New York NY 10118

In re Application of SOFER et al. Application No.: 10/519,483 PCT No.: PCT/IL03/00496 Int. Filing: 12 June 2003 Priority Date: 13 June 2002 Attorney Docket No.: 1887 For: METHOD AND APPARATUS FOR A MULTI-SENSOR IMAGING AND SCENE INTERPRETATION SYSTEM TO AID THE VISUALLY IMPAIRED	DECISION ON PETITION UNDER 37 CFR 1.137(b)

The petition to revive under 37 CFR 1.137(b) filed 30 December 2004 in the above-captioned application is hereby **GRANTED** as follows:

Applicant's statement that the "entire delay in filing the required reply from the due date for the required reply until the filing of a grantable petition under 37 CFR 1.137(b) was unintentional" meets the requirements of 37 CFR 1.137(b)(3).

A review of the application file reveals that the basic national fee of $150 has been provided. The required petition fee of $750 was also paid. Thus, the requirements of 37 CFR 1.137(b) have been satisfied. Therefore, the request to revive the application abandoned under 35 U.S.C. 371(d) is granted as to the National stage in the United States of America.

This application is being forwarded to the United States Designated/Elected Office for further processing for issuance of a Notification of Missing Requirements indicating that an oath or declaration, in compliance with 37 CFR 1.497(a) and (b),and the surcharge for filing the declaration after the thirty month period, is required.

Cynthia M. Kratz

Cynthia M. Kratz
Attorney Advisor
Office of PCT Legal Administration

Telephone: 571-272-3286
Facsimile: 571-273-0459

09 JUN 2005

UNITED STATES PATENT AND TRADEMARK OFFICE

COMMISSIONER FOR PATENTS
UNITED STATES PATENT AND TRADEMARK OFFICE
P.O. BOX 1450
ALEXANDRIA, VA 22313-1450
www.uspto.gov

FRANK J. JORDAN
JORDAN AND HAMBURG LLP
122 EAST 42ND STREET
NEW YORK, NY 10168

In re Application of YAMASAKI	
Application No.: 10/519,509	
PCT Application No.: PCT/JP03/07480	
Int. Filing Date: 12 June 2003	
Priority Date Claimed: 13 June 2002	
Attorney Docket No.: F-8484	DECISION ON PETITION
For: COKE OVEN DOORS FOR PROMOTING TEMPERATURE INCREASE IN THE VICINITY THEREOF	UNDER 37 CFR 1.137(b)

Applicant's "Petition to Revive Unintentionally Abandoned International Application," filed in the United States Patent and Trademark Office on 22 December 2004, which is being treated as a Petition for Revival under 37 CFR 1.137(b), is GRANTED.

BACKGROUND

On 12 June 2003, applicant filed international application PCT/JP03/07480. The international application claims a priority date of 13 June 2002 and designates the United States. The deadline for paying the basic national fee in the United States was thirty months from the priority date, that is 13 December 2004. Applicant missed this deadline.

On 22 December 2004, applicant filed the instant petition for revival accompanied by, *inter alia*, the requisite basic national fee as required by 35 U.S.C. 371(c)(1), a copy of the international application as required by 35 U.S.C. 371(c)(2), an executed declaration, and the petition fee of $1500.

DISCUSSION

A petition to revive an abandoned application under 37 CFR 1.137(b) must be filed without intentional delay from the time the application became abandoned and/or applicant first became aware of the abandoned status of the application. A petition under 37 CFR 1.137(b) must be accompanied by (1) a proper reply, (2) a statement that the entire delay in filing the required reply from the due date for the reply until the filing of a grantable petition was unintentional, (3) the petition fee required by law, and (4) a terminal disclaimer and fee (if the international application was filed prior to June 8, 1995). A payment of the basic national fee constitutes a proper reply for entry into the national stage.

Applicant's statement in the petition that "the entire delay in filing the required reply from the due date for the required reply until the filing of a grantable petition under 37 CFR 1.137(b) was unintentional" satisfies the requirements of 37 CFR 1.137(b)(3). The submission of the national fee and the copy of the international application satisfies 37 CFR 1.137(b)(1). The payment of the petition fee satisfies the requirement under 37 CFR 1.137(b)(2). A terminal disclaimer is not required because the application was filed on or after 08 June 1995. Therefore, the requirements for a grantable petition under 37 CFR 1.137(b) have been satisfied.

Regarding the declaration filed on 22 December 2004, 37 CFR 1.69(b) requires that the translation of a foreign language oath or declaration be accompanied by a statement that the translation is accurate. Although applicant's foreign language declaration appears to include a translation into English, it does not include a statement that the translation is accurate. Thus, the declaration is not in compliance with 37 CFR 1.69(b).

CONCLUSION

The petition to revive the application abandoned under 37 CFR 1.137(b) is GRANTED as to the National Stage in the United States of America.

The application is being forwarded to the National Stage Processing Division of the Office of PCT Operations for continued processing, including a mailing of a Notification of Missing Requirements (PCT/DO/EO/905) indicating that a declaration including a statement in accordance with 37 CFR 1.69(b) as set forth above, is due.

Amy Vanatta
PCT Legal Administration Detailee
Telephone: 571-272-6095
Facsimile: 571-273-0459

Leonard Smith
PCT Legal Examiner
Office of PCT Legal Administration

UNITED STATES PATENT AND TRADEMARK OFFICE

Commissioner for Patents
United States Patent and Trademark Office
P.O. Box 1450
Alexandria, VA 22313-1450
www.uspto.gov
DIW Aug-07

WOODCOCK WASHBURN LLP
CIRA CENTRE, 12TH FLOOR
2929 ARCH STREET
PHILADELPHIA PA 19104-2891

COPY MAILED

AUG 03 2007

OFFICE OF PETITIONS

In re Application of	:	
Zia Shlaimoun	:	
Application Number: 10/519514	:	ON PETITION
Filing Date: 09/23/2005	:	
Attorney Docket Number: THOM-0038	:	

This is a decision on the petition under 1.137(b),[1] filed on 30 March, 2007, to revive the above-identified application.

The petition is **GRANTED**.

This application became abandoned on 24 September, 2006, for failure to timely respond to the non-final Office action mailed on 23 June, 2006, which set a three (3) month shortened statutory period for reply. No extensions of time under 37 CFR 1.136(a)

---

[1] Effective December 1, 1997, the provisions of 37 CFR 1.137(b) now provide that where the delay in reply was unintentional, a petition may be filed to revive an abandoned application or a lapsed patent pursuant to 37 CFR 1.137(b). A grantable petition filed under the provisions of 37 CFR 1.137(b) must be accompanied by:

(1) the required reply, unless previously filed. In a nonprovisional application abandoned for failure to prosecute, the required reply may be met by the filing of a continuing application. In a nonprovisional application filed on or after June 8, 1995, and abandoned for failure to prosecute, the required reply may also be met by the filing of a request for continued examination in compliance with § 1.114. In an application or patent, abandoned or lapsed for failure to pay the issue fee or any portion thereof, the required reply must be the payment of the issue fee or any outstanding balance thereof. In an application abandoned for failure to pay the publication fee, the required reply must include payment of the publication fee.

(2) the petition fee as set forth in 37 CFR 1.17(m);

(3) a statement that the entire delay in filing the required reply from the due date for the reply until the filing of a grantable petition pursuant to 37 CFR 1.137(b) was unintentional. The Commissioner may required additional information where there is a question whether the delay was unintentional; and

(4) any terminal disclaimer (and fee as set forth in 37 CFR 1.20(d)) required pursuant to 37 CFR 1.137(c)).

were obtained. Notice of Abandonment was mailed on 19 January, 2007.

Petitioners have filed an amendment as the required reply.

The application is being referred to Technology Center Art Unit 2838 for further processing.

Telephone inquiries concerning this matter may be directed to the undersigned at (571)272-3231.

D Wood

Douglas I. Wood
Senior Petitions Attorney
Office of Petitions

13 JAN 2005

UNITED STATES PATENT AND TRADEMARK OFFICE

COMMISSIONER FOR PATENTS
UNITED STATES PATENT AND TRADEMARK OFFICE
P.O. BOX 1450
ALEXANDRIA, VA 22313-1450
www.uspto.gov

Lynda L. Calderone
AKIN GUMP STRAUSS HAUER & FELD LLP
One Commerce Square
2005 Market Street, Suite 2200
Philadelphia, PA 19103-7013

In re Application of SMITH, Kyle L. U.S. Application No.: 10/519,515 Filing Date: 07 December 2004 Attorney Docket No.: 681132-2 For: COMPOSITIONS FOR IMPROVING MENTAL PERFORMANCE	**DECISION ON PETITION FOR REVIVAL UNDER 37 CFR 1.137(b)**

This decision is in response to applicants' "Petition for Revival of an Application for Patent Abandoned Unintentionally Under 37 C.F.R. § 1.137(b)" filed on 07 December 2004 to revive international application PCT/US02/21062 which was abandoned under 35 U.S.C. 371(d) and is hereby **GRANTED** as to the present U.S. national application as follows:

International application PCT/US02/21062 became abandoned as to the United States of America for failure to pay the basic national fee by 05 January 2004. The filing of the present continuing application under 35 U.S.C. 111(a) is accepted as an appropriate response under 37 CFR 1.137(b). The $685.00 petition to revive fee has been paid. Applicants' statement in the petition regarding the delay satisfies the requirement of 37 CFR 1.137(b)(3).

International application PCT/US02/21062 is being revived for purposes of continuity only and since continuity has been established by this decision reviving the international application, the international application is again abandoned in favor of the present continuing application number 10/519,515.

This application is being forwarded to the Office of Initial Patent Examination for further processing under 35 U.S.C. 111(a) with a filing date of 07 December 2004.

James Thomson

James Thomson
Attorney Advisor
Office of PCT Legal Administration

Tel.: (571) 272-3302

UNITED STATES PATENT AND TRADEMARK OFFICE

Commissioner for Patents
United States Patent and Trademark Office
P.O. Box 1450
Alexandria, VA 22313-1450
www.uspto.gov

PANITCH SCHWARZE BELISARIO & NADEL LLP
ONE COMMERCE SQUARE
2005 MARKET STREET, SUITE 2200
PHILADELPHIA PA 19103

COPY MAILED

FEB 1 8 2009

OFFICE OF PETITIONS

In re Application of	:	
Kyl L. Smith	:	
Application No. 10/519,515	:	DECISION ON PETITION
Filed: December 7, 2004	:	
Attorney Docket No. 681132-2US	:	

This is a decision on the petition under the unintentional provisions of 37 CFR 1.137(b), filed May 21, 2008, to revive the above-identified application.

The petition is **GRANTED**.

The application became abandoned for failure to reply in a timely manner to the Non-Compliant Notice mailed October 3, 2007 which set a shortened statutory period for reply of one (1) month or thirty (30) days (whichever is later). No extensions of time under the provisions of 37 CFR 1.136(a) were timely obtained. Accordingly, the application became abandoned on November 4, 2007. A Notice of Abandonment was mailed March 20, 2008.

The petition satisfies the requirements of 37 CFR 1.137(b) in that petitioner has supplied (1) the reply in the form of a response to the Restriction Requirement, (2) the petition fee of $770.00 and (3) a proper statement of unintentional delay.

Petitioner's request for change of power of attorney is not accepted as petitioner has not fully complied with 37 CFR 3.73(b). 37 CFR 3.73(b) provides that: (1) when an assignee seeks to take action in a matter before the Office, the assignee must establish its ownership of the property to the satisfaction of the Commissioner; (2) ownership is established by submitting to the Office, in the Office file related to the matter in which action is sought to be taken, documentary evidence of a chain of title from the original owner to the assignee (*e.g.*, copy of an executed assignment submitted for recording) or by specifying (*e.g.*, reel and frame number) where such evidence is recorded in the Office; (3) the submission establishing ownership must be signed by a party authorized to act on behalf of the assignee; and (4) documents submitted to establish ownership may be required to be recorded as a condition to permitting the assignee to take action in a matter pending before the Office.

Current USPTO assignment records show that as of September 2008, Vital Basics, Inc. is no longer the assignee. Further, while a courtesy copy of this decision is being mailed to the person signing the instant petition, all future correspondence will be directed to the address currently of record until such time as appropriate instructions are received to the contrary.

Additionally, an extension of time under 37 CFR 1.136 must be filed prior to the expiration of the maximum extendable period for reply. *See* In re Application of S., 8 USPQ2d 1630, 1631 (Comm'r Pats. 1988). Since the $1,115.00, five month extension of time fee submitted on May 21, 2008 was subsequent to the maximum extendable period for reply, this fee is unnecessary and will be refunded to petitioner's deposit account in due course.

Telephone inquiries concerning this decision should be directed to Joan Olszewski at (571)272-7751.

This application is being referred to Technology Center AU 1655 for appropriate action by the Examiner in the normal course of business on the reply received.

/Liana Walsh/
Liana Walsh
Petitions Examiner
Office of Petitions

cc: John M. Garvey
Foley & Lardner LLP
111 Huntington Avenue
26th Floor
Boston MA 02199-7610

UNITED STATES PATENT AND TRADEMARK OFFICE

Commissioner for Patents
United States Patent and Trademark Office
P.O. Box 1450
Alexandria, VA 22313-1450
www.uspto.gov

Dilworth & Barrese
333 Earle Ovington Boulevard
Uniondale, NY 11553

7/31/08

In re Application of:
BOTTCHER, UWE
Serial No. 10/519,528
Filed: Dec. 27, 2004
Docket: 821-65
Title: ARRANGEMENT AND A MEHTOD FOR CLAMPING THIN RODS

DECISION ON PETITION
UNDER 37 CFR § 1.181

This is a decision on the petition filed Jul. 18, 2008 under 37 CFR 1.181 requesting withdrawal of the finality of the last Office action mailed May 29, 2008.

The petition is **granted.**

The record shows that claims 3-6, 10-12, and 15-28 were indicated to be allowable in the Oct. 26, 2007 Office action. On Feb. 28, 2008, an amendment was filed placing allowable dependent claims 3, 6, 10, and 15 in independent form. In the May 29, 2008 Office action, claims 3-20 and 29-32 were finally rejected. However, the final rejection of those previously indicated allowable claims was not necessitated by the Feb. 28, 2008 amendment. Thus, the final rejection was improper under MPEP 706.07(a) and the finality of the rejection is withdrawn. The period to respond to the last Office action of May 29, 2008 remains unchanged. Since the finality is being withdrawn, any amendment responding to the Office action dated May 29, 2008 will be treated as a 37 CFR § 1.111 amendment.

In finding petitioner's points of argument persuasive, the requested relief is granted. The finality of the last Office action of May 29, 2008 is hereby withdrawn.

Any questions regarding this decision should be directed to Special Program Examiner, Henry Yuen, at 571-272-4856.

PETITION GRANTED.

Frederick R. Schmidt, Director
Technology Center 3700

UNITED STATES PATENT AND TRADEMARK OFFICE

Commissioner for Patents
United States Patent and Trademark Office
P.O. Box 1450
Alexandria, VA 22313-1450
www.uspto.gov

ROGER PITT
KIRKPATRICK & LOCKHART PRESTON GATES ELLIS LLP
599 LEXINGTON AVENUE
NEW YORK, NY 10022-6030

COPY MAILED

JUN 1 1 2009

OFFICE OF PETITIONS

In re Application of	:	
Nguyen et al.	:	DECISION ON PETITION
Application No. 10/519,529	:	TO WITHDRAW
Filed: June 6, 2005	:	FROM RECORD
Attorney Docket No. NGUYEN	:	

This is a decision on the Request to Withdraw as attorney or agent of record under 37 C.F.R. § 1.36(b), filed April 27, 2006.

The request is **NOT APPROVED** because it is moot.

A review of the file record indicates that all previous powers of attorney were revoked by the assignee of the patent application on June 5, 2006. Accordingly, the request to withdraw under 37 C.F.R. § 1.36(b) is moot

All future communications from the Office will continue to be directed to the below-listed address until otherwise notified by applicant.

Telephone inquires concerning this decision should be directed to the undersigned at 571-272-6059.

Alicia Kelley
Petitions Examiner
Office of Petitions

cc: BROWN RUDNICK LLP
ONE FINANCIAL CENTER
BOSTON, MA 02111

UNITED STATES PATENT AND TRADEMARK OFFICE

Commissioner for Patents
United States Patent and Trademark Office
P.O. Box 1450
Alexandria, VA 22313-1450
www.uspto.gov

FOLEY AND LARDNER LLP
SUITE 500
3000 K STREET NW
WASHINGTON DC 20007

MAILED

OCT 01 2009

OFFICE OF PETITIONS

In re Patent No. 7,544,768	:	DECISION ON REQUEST
Hoppe-Seyler, et al.	:	FOR RECONSIDERATION OF
Issue Date: June 9, 2009	:	PATENT TERM ADJUSTMENT &
Application No. 10/519,539	:	NOTICE OF INTENT TO ISSUE
Filed: March 15, 2005	:	CERTIFICATE OF CORRECTION
Attorney Docket No. 085449-0158	:	

This is in response to the "REQUEST FOR RECONSIDERATION OF PATENT TERM ADJUSTMENT UNDER 37 C.F.R. 1.705," filed January 30, 2009 (and resubmitted August 7, 2009), requesting that the patent term adjustment determination for the above-identified patent be changed from eighty (80) days to eighty-four(84) days.

Patentees request that the decision on this request for reconsideration of patent term adjustment be deferred or delayed until a final decision has been rendered in *Wyeth v. Dudas*. There is no specific regulatory provision for requesting that a petition under 37 CFR 1.705(d) be held in abeyance. Accordingly, the request for deferral/delay of decision under 37 CFR §1.705(d) is **DISMISSED**.

The request for reconsideration of patent term adjustment is **GRANTED** to the extent indicated herein.

The patent term adjustment indicated in the patent is to be corrected by issuance of a certificate of correction showing a revised Patent Term Adjustment of **zero (0)** days.

Patentees are given **THIRTY (30) DAYS or ONE (1) MONTH, whichever is longer**, from the mail date of this decision to respond. No extensions of time will be granted under § 1.136.

Patentees are given **THIRTY (30) DAYS or ONE (1) MONTH, whichever is longer**, from the mail date of this decision to respond. No extensions of time will be granted under § 1.136.

On June 9, 2009, the above-identified application matured into U.S. Patent No. 7,544,768 with a patent term adjustment of 80 days.

This request for reconsideration of patent term adjustment was timely filed within two months of the issue date of the patent. See 1.705(d).

The Office acknowledges submission of the $200.00 fee set forth in 37 CFR 1.18(e). This required fee will not be refunded. No additional fees are required.

Patentees request recalculation of the patent term adjustment based on the decision in *Wyeth v. Dudas*, 580 F. Supp. 2d 138, 88 U.S.P.Q. 2d 1538 (D.D.C. 2008). Patentees assert that pursuant to *Wyeth*, a PTO delay under §154(b)(1)(A) overlaps with a delay under §154(b)(1)(B) only if the delays "occur on the same day." Patentees maintain that the period of adjustment due to the Three Year Delay by the Office, pursuant to 37 CFR § 1.703(b), of 256 days and the period of adjustment due to examination delay, pursuant to 37 CFR §1.702(a), of 4 days do not overlap as these periods do not occur on the same day.

Patentees argue that the period of adjustment due to the Three Year Delay by the Office, pursuant to 37 CFR § 1.702(b), is calculated from the application's 371 fulfillment date to the filing of a request for continued examination (RCE).

Patentees are informed that the Three Year Delay period is triggered by the application's commencement date, not the 371 fulfillment date. The commencement date is 30 months from the priority date claimed in the international application, or earlier. The priority date claimed in the international application is July 1, 2002. Patentees did not request early processing under 35 U.S.C. 371 (f). See also § 371(b). Thirty months from that date is January 1, 2005. As January 1, 2005 was a Saturday, January 3, 2005 is the commencement date and is the beginning of the Three Year Delay period. The period is terminated by the filing of a Request for Continued Examination (RCE). The filing of a RCE cuts-off the applicants' ability to accumulate any additional patent term adjustment against the

three-year pendency provision, but does not otherwise affect patent term adjustment. 37 CFR § 1.703(b)(1) However, not all application pendency time is counted toward the Three Year Delay period. See 35 U.S.C. 154(b)(1)(B)(i)-(iii). In this instance, the exclusion in 35 U.S.C. 154(b)(1)(B)(ii) applies. It excludes from the Three Year Delay period any time consumed by appellate review. See also 37 CFR 1.702(b)(4). Therefore, the time consumed by appellate review, the 153 day period running from the date of the filing of the notice of appeal, June 27, 2008, ending on the date the RCE was filed, November 26, 2008, is excluded from the Three Year Delay period.

Accordingly, the period of adjustment due to the Three Year delay by the Office is 175 days (328 - 153 excluded).

Patentees assert that in addition to the three year delay period, they are entitled to a period of adjustment due to examination delay, pursuant to 37 CFR §1.702(a)(1) of 4 days for the failure by the Office to mail at least one of a notification under 35 U.S.C. 132 not later than fourteen months after the date the application fulfilled the requirements of 35 U.S.C. 371 in an international application.

Under 37 CFR § 1.703(f), patentees are entitled to a period of patent term adjustment equal to the period of delays based on the grounds set forth in 37 CFR §1.702 reduced by the period of time equal to the period of time during which patentees failed to engage in reasonable efforts to conclude prosecution pursuant to 37 CFR §1.704. In other words, the period of Office delay reduced by the period of applicant delay. The period of reduction of 176 days for applicant delay is not in dispute. Patentees assert that the total period of Office delay is the sum of the period of Three Years Delay (256 days per patentees' calculation) and the period of Examination Delay (4 days, not in dispute) **to the extent that these periods of delay are not overlapping**.

Patentees contend that no portion of the two periods of delay overlap.

As such, patentees assert entitlement to a patent term adjustment of 84 days (256 per patentees' calculation +4 reduced by 0 overlap -176 for applicant delay). Considering that the three-year period is properly calculated based on the commencement date with an excluded period due to appellate

review and is 175 days, patentees' assertion of entitlement to a patent term adjustment is considered to be 3 days (175 + 4 reduced by 0 overlap - 176 for applicant delay).

As discussed above, the Office states that the patent issued 3 years and 175 days after the application's commencement date, the calculation of the three year period ending when the November 26, 2008 RCE was filed, and excluding the period consumed by appellate review. The Office agrees that the action detailed above was not taken within the specified time frame, and thus, the entry of period of adjustment of 4 days is correct. At issue is whether patentees should accrue 175 (per Office's calculation of the Three Year Delay Period) days of patent term adjustment for the Office taking in excess of three years to issue the patent, as well as, 4 days for Office failure to take a certain action within a specified time frame (or examination delay).

The Office contends that the 4 days of the 175 day period for over three year pendency overlap with the 4 days accorded for Office delay prior to the issuance of the patent. Patentees' interpretation of the period of overlap has been considered and found to be incorrect. Patentees' calculation of the period of overlap is inconsistent with the Office's interpretation of this provision. 35 U.S.C. 154(b)(2)(A) limits the adjustment of patent term, as follows:

> to the extent that the periods of delay attributable to grounds specified in paragraph (1) overlap, the period of any adjustment granted under this subsection shall not exceed the actual number of days the issuance of the patent was delayed.

Likewise, 37 CFR 1.703(f) provides that:

> To the extent that periods of delay attributable to the grounds specified in §1.702 overlap, the period of adjustment granted under this section shall not exceed the actual number of days the issuance of the patent was delayed.

As explained in *Explanation of 37 CFR 1.703(f) and of the United States Patent and Trademark Office Interpretation of 35 U.S.C. 154(b)(2)(A)*, 69 Fed. Reg. 34283 (June 21, 2004), the Office interprets 35 U.S.C. 154(b)(2)(A) as permitting either patent

term adjustment under 35 U.S.C. 154(b)(1)(A)(i)-(iv), or patent term adjustment under 35 U.S.C. 154(b)(1)(B), but not as permitting patent term adjustment under both 35 U.S.C. 154(b)(1)(A)(i)-(iv) and 154(b)(1)(B). Accordingly, the Office implements the overlap provision as follows:

> If an application is entitled to an adjustment under 35 U.S.C. 154(b)(1)(B), the entire period during which the application was pending (except for periods excluded under 35 U.S.C. 154(b)(1)(B)(i)-(iii)), and not just the period beginning three years after the actual filing date of the application, is the period of delay under 35 U.S.C. 154(b)(1)(B) in determining whether periods of delay overlap under 35 U.S.C. 154(b)(2)(A). Thus, any days of delay for Office issuance of the patent more than 3 years after the filing date of the application, which overlap with the days of patent term adjustment accorded prior to the issuance of the patent will not result in any additional patent term adjustment. See 35 U.S.C. 154(b)(1)(B), 35 U.S.C. 154(b)(2)(A), and 37 CFR § 1.703(f). See *Changes to Implement Patent Term Adjustment Under Twenty Year Term; Final Rule*, 65 Fed. Reg. 54366 (Sept. 18, 2000). See also *Revision of Patent Term Extension and Patent Term Adjustment Provisions; Final Rule*, 69 Fed. Reg. 21704 (April 22, 2004), 1282 Off. Gaz. Pat. Office 100 (May 18, 2004). See also *Explanation of 37 CFR 1.703(f) and of the United States Patent and Trademark Office Interpretation of 35 U.S.C. 154(b)(2)(A)*, 69 Fed. Reg. 34283 (June 21, 2004).

The current wording of § 1.703(f) was revised in response to the misinterpretation of this provision by a number of Patentees. The rule was slightly revised to more closely track the corresponding language of 35 U.S.C. 154(b)(2)(A). The relevant portion differs only to the extent that the statute refers back to provisions of the statute whereas the rule refers back to sections of the rule. This was not a substantive change to the rule nor did it reflect a change of the Office's interpretation of 35 U.S.C. 154(b)(2)(A). As stated in the *Explanation of 37 CFR 1.703(f) and of the United States Patent and Trademark Office Interpretation of 35 U.S.C. 154(b)(2)(A)*, the Office has consistently taken the position that if an application is entitled to an adjustment under the three-year pendency provision of 35 U.S.C. 154(b)(1)(B), the entire period during which the application was pending before the Office (except for

periods excluded under 35 U.S.C. 154(b)(1)(B)(i)-(iii)), and not just the period beginning three years after the actual filing date of the application, is the relevant period under 35 U.S.C. 154(b)(1)(B) in determining whether periods of delay "overlap" under 35 U.S.C. 154(b)(2)(A).

This interpretation is consistent with the statute. Taken together the statute and rule provide that to the extent that periods of delay attributable to grounds specified in 35 U.S.C. 154(b)(1) and in corresponding §1.702 overlap, the period of adjustment granted shall not exceed the actual number of days the issuance of the patent was delayed. The grounds specified in these sections cover the A) guarantee of prompt Patent and Trademark Office responses, B) guarantee of no more than 3 year application pendency, and C) guarantee or adjustments for delays due to interference, secrecy orders and appeals. A section by section analysis of 35 U.S.C. 154(b)(2)(A) specifically provides that:

> Section 4402 imposes limitations on restoration of term. In general, pursuant to [35 U.S.C.] 154(b)(2)(A)-(C), total adjustments granted for restorations under [35 U.S.C. 154](b)(1) are reduced as follows: (1) To the extent that there are multiple grounds for extending the term of a patent that may exist simultaneously (e.g., delay due to a secrecy order under [35 U.S.C.] 181 and administrative delay under [35 U.S.C.] 154(b)(1)(A)), the term should not be extended for each ground of delay but only for the actual number of days that the issuance of a patent was delayed; See 145 Cong. Rec. S14,718[1]

As such, the period for over 3 year pendency does not overlap only to the extent that the actual dates in the period beginning three years after the commencement date overlap with the actual dates in the periods for failure of the Office to take action within specified time frames. In other words, consideration of the overlap does not begin three years after the commencement date of the application. Treating the relevant period as starting on January 4, 2008, the date that is 3 years after the commencement date of the application is incorrect.

---

[1] The AIPA is title IV of the Intellectual Property and Communications Omnibus Reform Act of 1999 (S. 1948), which was incorporated and enacted as law as part of Pub. L. 106-113. The Conference Report for H.R. 3194, 106th Cong. 1st Sess. (1999), which resulted in Pub. L. 106-113, does not contain any discussion (other than the incorporated language) of S. 1948. A section-by-section analysis of S. 1948, however, was printed in the Congressional Record at the request of Senator Lott, See 145 Cong. Rec. S14,708-26 (1999)(daily ed. Nov. 17, 1999).

In this instance, the relevant period under 35 U.S.C. 154(b)(1)(B) in determining whether periods of delay "overlap" under 35 U.S.C. 154(b)(2)(A) is the entire period from the application's commencement date to the date of filing of the RCE on November 26, 2008. In addition, 153 days were excluded under 35 U.S.C. 154(b)(1)(B)(ii) as time consumed by appellate review. 4 days of patent term adjustment were accorded prior to the issuance of the patent for the Office failing to respond within a specified time frame during the pendency of the application. The two periods overlap by 4 days.

Therefore, 171 days, not 252 days, of patent term adjustment should have been entered for the Three Year Delay period, since the period of delay of 175 days attributable to the delay in the issuance of the patent overlaps with the adjustments of 4 days attributable to the ground specified in § 1.702(a)(1). Accordingly, considering the overlap, at issuance, 171 additional days should have been entered for the Office taking in excess of three years to issue the patent after the application commencement date. Pursuant to this decision, the entry of 252 days of Office delay is being removed and 171 non-overlapping days of Office delay are now being entered (for a total revised patent term adjustment of 0 days).

In other words, patentees are entitled to a patent term adjustment of 0 days (4 days examination delay +178 days Three Year delay reduced by 4 days overlap - 176 days for applicant delay).

Accordingly, the patent term adjustment indicated in the patent is to be corrected by issuance of a certificate of correction showing a revised Patent Term Adjustment of zero (0) days.

The application file is being forwarded to the Certificates of Correction Branch for issuance of a certificate of correction in order to rectify this error. The Office will issue a certificate of correction indicating that the term of the above-identified patent is adjusted by zero (0) days.

Telephone inquiries specific to this matter should be directed to Shirene Willis Brantley, Senior Petitions Attorney, at (571) 272-3230.

Nancy Johnson
Senior Petitions Attorney
Office of the Deputy Commissioner
for Patent Examination Policy

enclosure: DRAFT certificate of correction

UNITED STATES PATENT AND TRADEMARK OFFICE

CERTIFICATE OF CORRECTION

PATENT : 7,544,768 B2

DATED : June 9, 2009

INVENTOR(S) : Karin Hoppe-Seyler et al.

It is certified that error appears in the above-identified patent and that said Letters Patent is hereby corrected as shown below:

On the cover page,

[*] Notice: Subject to any disclaimer, the term of this patent is extended or adjusted under 35 USC 154(b) by (80) days

Delete the phrase "by 80 days" and insert – by 0 days--

30 SEP 2005

#3

UNITED STATES PATENT and TRADEMARK OFFICE

COMMISSIONER FOR PATENTS
UNITED STATES PATENT AND TRADEMARK OFFICE
P.O BOX 1450
ALEXANDRIA, VA 22313-1450
www.uspto.gov

YOUNG & THOMPSON
745 South 23rd Street
Arlington, VA 22202

In re Application of	:	DECISION ON
Akira USUI et al	:	
Int. Application: PCT/JP03/08360	:	
Application No.: 10/519,571	:	
Int. Filing Date: 01 July 2003	:	REQUEST UNDER
Priority Date: 02 July 2002	:	
Attorney's Docket No.: 8017-1156	:	
For: GROUP III NITRIDE SEMICONDUTOR	:	
SUMICONDUCTOR SUBSTRATE AND	:	
PROCESS FOR PRODUCTION THEROF	:	37 CFR 1.497(d)

This is a decision on applicants' "REQUEST TO CORRECT INVENTORSHIP UNDER 37 CFR 1.48(a)" filed on 09 March 2005, which is being treated as a request under 37 CFR 1.497(d) to add joint inventor Akira USUI in the executed declaration. The processing fee of $130.00 has been charged to Deposit Account No.: 25-0120.

BACKGROUND

On 01 July 2003, applicants filed international application No. PCT/JP03/08360 designating the United States and claiming a priority date of 02 July 2002. The deadline for entry into the national stage by paying the basic national fee in the U.S. expired as of midnight of 02 January 2005.

On 30 December 2004, applicants filed a Transmittal Letter for entry into the national stage in the United States of America. Filed with the Transmittal Letter was, inter alia, the requisite basic national fee. At such time no executed declaration or oath was submitted.

On 09 March 2005, applicants filed a request under 37 CFR 1.497(d) to add joint inventor Akira USUI in the executed declaration.

DISCUSSION

A submission under 37 CFR 1.497(d) must include:

(1) a statement from each person being added as an inventor and from each person being deleted as an inventor that the error in inventorship occurred without deceptive intention on his or her part;
(2) the fee set forth in § 1.17(i); and

(3) If an assignment has been executed by any of the original named inventors, the written consent of the assignee (see 37 CFR §3.73(b) of this chapter).

A review of the application file reveals that applicants have satisfied items (1) - (3) under 37 CFR 1.497(d).

With respect to item (1), the statement submitted on 09 March 2005 by Akira USUI is sufficient because the statements state that the error in inventorship occurred without a deceptive intent.

With respect to item (2), the processing fee of $130.00 has been charged to the Deposit Account.

With respect to item (3), NEC CORPORATION, the assignee, consents to the correction of inventorship to the above application and it has filed in the requisite papers establishing its right to take action under 37 CFR §3.73(b).

Accordingly, the requests are deemed to satisfy requirements (1), (2), and (3) under 37 CFR 1.497(d).

CONCLUSION

For the reasons above, the request under 37 CFR 1.497(d) is **GRANTED.**

This application is being returned to the United States Designated/Elected Office (DO/EO/US) for continued processing consistent with this decision. The 35 USC 371(c)(1), (c)(2), and (c)(4) date of this application is **09 March 2005**.

Rafael Bacares
PCT Legal Examiner
PCT Legal Office
Telephone: (571) 272-3276
Facsimile: (571) 273-0459

UNITED STATES PATENT AND TRADEMARK OFFICE

Commissioner for Patents
United States Patent and Trademark Office
P.O. Box 1450
Alexandria, VA 22313-1450
www.uspto.gov

08 MAY 2007

Gerald J. Stanton
Harrington & Smith, LLP
4 Research Drive
Shelton, CT 06484-6212

In re Application of	:
Sung H. PAK	:
Serial No. 10/519,577	: DECISION ON PETITION
PCT Number: PCT/US03/20237	:
Int. Filing Date: 27 June 2003	: UNDER 37 CFR 1.78(a)(3)
Priority Date: 27 June 2002	:
Attorney Docket No. 904.0102.U1 (US)	:
For: METHOD AND APPARATUS FOR DETECTING OPTICAL WAVE LENGTHS	:

This is a decision on the petition under 37 CFR 1.78(a)(3), filed 08 August 2006, to accept an unintentionally delayed claim under 35 U.S.C. § 120 for the benefit of priority to the prior-filed nonprovisional application set forth in the amendment filed concurrently with the instant petition.

The petition is **GRANTED**.

The present nonprovisional application was filed after November 29, 2000, and the claim herein for the benefit of priority to the prior-filed nonprovisional application is submitted after expiration of the period specified in 37 CFR 1.78(a)(2)(ii). Therefore, this is a proper petition under 37 CFR 1.78(a)(3).

A petition for acceptance of a claim for late priority under 37 CFR 1.78(a)(3) is only applicable to those applications filed on or after November 29, 2000. Further, the petition is appropriate only after the expiration of the period specified in 37 CFR 1.78(a)(2)(ii). In addition, the petition under 37 CFR 1.78(a)(3) must be accompanied by:

(1) the reference required by 35 U.S.C. § 120 and 37 CFR 1.78(a)(2)(i) of the prior-filed application, unless previously submitted;

(2) the surcharge set forth in § 1.17(t); and

(3) a statement that the entire delay between the date the claim was due under 37 CFR 1.78(a)(2)(ii) and the date the claim was filed was unintentional. The Commissioner may require additional information where there is a question whether the delay was unintentional.

The petition complies with the requirements for a grantable petition under 37 CFR 1.78(a)(3) in that (1) a reference to the prior-filed nonprovisional applications has been included in an amendment to the first sentence of the specification following the title, as provided by 37 CFR 1.78(a)(2)(iii); (2) the surcharge fee required by 37 CFR 1.17(t) has been submitted; and (3) the petition contains a proper statement of unintentional delay. Accordingly, having found that the instant petition for acceptance of an unintentionally delayed claim for the benefit of priority under 35 U.S.C. § 120 to the prior-filed nonprovisional applications satisfies the conditions of 37 CFR 1.78(a)(3), the petition is granted.

The granting of the petition to accept the delayed benefit claim to the prior-filed applications under 37 CFR 1.78(a)(3) should not be construed as meaning that this application is entitled to the benefit of the prior-filed applications. In order for this application to be entitled to the benefit of the prior-filed applications, all other requirements under 35 U.S.C. § 120 and 37 CFR 1.78(a)(1) and (a)(2) must be met. Similarly, the fact that the corrected Filing Receipt accompanying this decision on petition includes the prior-filed applications should not be construed as meaning that applicant is entitled to the claim for benefit of priority to the prior-filed applications noted thereon. Accordingly, the examiner will, in due course, consider this benefit claim and determine whether this application is entitled to the benefit of the earlier filing date.

A corrected Filing Receipt, which includes the priority claim to the prior-filed nonprovisional applications, accompanies this decision on petition.

Any inquiries concerning this decision may be directed to Derek Putonen at (571) 272-3294. All other inquiries concerning either the examination procedures or status of the application should be directed to the Technology Center.

This matter is being referred to Technology Center Art Unit 2874 for appropriate action on the amendment filed 08 August 2006, including consideration by the examiner of applicant's entitlement to claim benefit of priority under 35 U.S.C. § 120 to the prior-filed nonprovisional applications.

BM

Boris Milef
Senior Legal Examiner
Office of PCT Legal Administration

ATTACHMENT: Corrected Filing Receipt

UNITED STATES PATENT AND TRADEMARK OFFICE

UNITED STATES DEPARTMENT OF COMMERCE
United States Patent and Trademark Office
Address: COMMISSIONER FOR PATENTS
P.O. Box 1450
Alexandria, Virginia 22313-1450
www.uspto.gov

APPL NO.	FILING OR 371(c) DATE	ART UNIT	FIL FEE REC'D	ATTY.DOCKET NO	TOT CLMS	IND CLMS
10/519,577	12/27/2004	2874	3400	904.0102.U1(US)	62	22

CONFIRMATION NO. 2523

CORRECTED FILING RECEIPT

OC000000023753475

29683
HARRINGTON & SMITH, PC
4 RESEARCH DRIVE
SHELTON, CT 06484-6212

Date Mailed: 05/08/2007

Receipt is acknowledged of this regular Patent Application. It will be considered in its order and you will be notified as to the results of the examination. Be sure to provide the U.S. APPLICATION NUMBER, FILING DATE, NAME OF APPLICANT, and TITLE OF INVENTION when inquiring about this application. Fees transmitted by check or draft are subject to collection. Please verify the accuracy of the data presented on this receipt. **If an error is noted on this Filing Receipt, please mail to the Commissioner for Patents P.O. Box 1450 Alexandria Va 22313-1450. Please provide a copy of this Filing Receipt with the changes noted thereon. If you received a "Notice to File Missing Parts" for this application, please submit any corrections to this Filing Receipt with your reply to the Notice. When the USPTO processes the reply to the Notice, the USPTO will generate another Filing Receipt incorporating the requested corrections (if appropriate).**

Applicant(s)

Daniel Levner, Toronto, ON, CANADA;
Martin F Fay, Waltham, MA;
Jingming Xu, Providence, RI;

Power of Attorney: The patent practitioners associated with Customer Number **29683**.

Domestic Priority data as claimed by applicant

This application is a 371 of PCT/US03/20237 06/27/2003
which claims benefit of 60/392,306 06/27/2002
and claims benefit of 60/393,209 07/01/2002
This application 10/519,577
is a CIP of 10/188,530 07/03/2002
which claims benefit of 60/302,904 07/03/2001

Foreign Applications

If Required, Foreign Filing License Granted: 05/08/2007

The country code and number of your priority application, to be used for filing abroad under the Paris Convention, is US10/519,577

Projected Publication Date: Not Applicable

Non-Publication Request: No

Early Publication Request: No

**** SMALL ENTITY ****

Title

Method and apparatus for detecting multiple optical wave lengths

Preliminary Class

385

PROTECTING YOUR INVENTION OUTSIDE THE UNITED STATES

Since the rights granted by a U.S. patent extend only throughout the territory of the United States and have no effect in a foreign country, an inventor who wishes patent protection in another country must apply for a patent in a specific country or in regional patent offices. Applicants may wish to consider the filing of an international application under the Patent Cooperation Treaty (PCT). An international (PCT) application generally has the same effect as a regular national patent application in each PCT-member country. The PCT process **simplifies** the filing of patent applications on the same invention in member countries, but **does not result** in a grant of "an international patent" and does not eliminate the need of applicants to file additional documents and fees in countries where patent protection is desired.

Almost every country has its own patent law, and a person desiring a patent in a particular country must make an application for patent in that country in accordance with its particular laws. Since the laws of many countries differ in various respects from the patent law of the United States, applicants are advised to seek guidance from specific foreign countries to ensure that patent rights are not lost prematurely.

Applicants also are advised that in the case of inventions made in the United States, the Director of the USPTO must issue a license before applicants can apply for a patent in a foreign country. The filing of a U.S. patent application serves as a request for a foreign filing license. The application's filing receipt contains further information and guidance as to the status of applicant's license for foreign filing.

Applicants may wish to consult the USPTO booklet, "General Information Concerning Patents" (specifically, the section entitled "Treaties and Foreign Patents") for more information on timeframes and deadlines for filing foreign patent applications. The guide is available either by contacting the USPTO Contact Center at 800-786-9199, or it can be viewed on the USPTO website at http://www.uspto.gov/web/offices/pac/doc/general/index.html.

For information on preventing theft of your intellectual property (patents, trademarks and copyrights), you may wish to consult the U.S. Government website, http://www.stopfakes.gov. Part of a Department of Commerce initiative, this website includes self-help "toolkits" giving innovators guidance on how to protect intellectual property in specific countries such as China, Korea and Mexico. For questions regarding patent enforcement issues, applicants may call the U.S. Government hotline at 1-866-999-HALT (1-866-999-4158).

LICENSE FOR FOREIGN FILING UNDER
Title 35, United States Code, Section 184
Title 37, Code of Federal Regulations, 5.11 & 5.15

GRANTED

The applicant has been granted a license under 35 U.S.C. 184, if the phrase "IF REQUIRED, FOREIGN FILING LICENSE GRANTED" followed by a date appears on this form. Such licenses are issued in all applications where the conditions for issuance of a license have been met, regardless of whether or not a license may be required as set forth in 37 CFR 5.15. The scope and limitations of this license are set forth in 37 CFR 5.15(a) unless an earlier

license has been issued under 37 CFR 5.15(b). The license is subject to revocation upon written notification. The date indicated is the effective date of the license, unless an earlier license of similar scope has been granted under 37 CFR 5.13 or 5.14.

This license is to be retained by the licensee and may be used at any time on or after the effective date thereof unless it is revoked. This license is automatically transferred to any related applications(s) filed under 37 CFR 1.53(d). This license is not retroactive.

The grant of a license does not in any way lessen the responsibility of a licensee for the security of the subject matter as imposed by any Government contract or the provisions of existing laws relating to espionage and the national security or the export of technical data. Licensees should apprise themselves of current regulations especially with respect to certain countries, of other agencies, particularly the Office of Defense Trade Controls, Department of State (with respect to Arms, Munitions and Implements of War (22 CFR 121-128)); the Bureau of Industry and Security, Department of Commerce (15 CFR parts 730-774); the Office of Foreign Assets Control, Department of Treasury (31 CFR Parts 500+) and the Department of Energy.

NOT GRANTED

No license under 35 U.S.C. 184 has been granted at this time, if the phrase "IF REQUIRED, FOREIGN FILING LICENSE GRANTED" DOES NOT appear on this form. Applicant may still petition for a license under 37 CFR 5.12, if a license is desired before the expiration of 6 months from the filing date of the application. If 6 months has lapsed from the filing date of this application and the licensee has not received any indication of a secrecy order under 35 U.S.C. 181, the licensee may foreign file the application pursuant to 37 CFR 5.15(b).

UNITED STATES PATENT AND TRADEMARK OFFICE

UNITED STATES DEPARTMENT OF COMMERCE
United States Patent and Trademark Office
Address: COMMISSIONER FOR PATENTS
P.O. Box 1450
Alexandria, Virginia 22313-1450
www.uspto.gov

KLARQUIST SPARKMAN, LLP
121 S.W. SALMON STREET
SUITE #1600
PORTLAND, OR 97204-2988

Mail Date: 04/20/2010

Applicant	: Syed V.S. Kashmiri	: DECISION ON REQUEST FOR
Patent Number	: 7569673	: RECALCULATION of PATENT
Issue Date	: 08/04/2009	: TERM ADJUSTMENT IN VIEW
Appliction No	: 10/519,580	: OF WYETH AND NOTICE OF INTENT TO
Filed	: 07/11/2005	: ISSUE CERTIFICATE OF CORRECTION
		:

The Request for Recalculation is **GRANTED** to the extent indicated.

The patent term adjustment has been determined to be **733** days. The USPTO will *sua sponte* issue a certificate of correction reflecting the amount of PTA days determined by the recalculation.

Prior to the issuance of the certificate of correction, the USPTO will afford patentee an opportunity to be heard and request reconsideration. Accordingly, patentee has **one month or thirty (30) days**, whichever is longer, to file a request for reconsideration of this patent term adjustment calculation. See 35 U.S.C. 154(b)(3)(B)(ii) and 37 CFR 1.322(a)(4). No extensions of time will be granted under 37 CFR 1.136.

Patentee should use document code PET.OP if electronically filing a request for reconsideration of this patent term adjustment calculation. The patentee must also include the information required by 37 CFR 1.705(b)(2) and the fee required by 37 CFR 1.18(e). If patentee does not file a timely request for reconsideration of this patent term adjustment calculation including the information required by 37 CFR 1.705(b)(2) and the fee required by 37 CFR 1.18(e), the USPTO will issue a certificate of correction reflecting the PTA determination noted above.

Patentee should be aware that in order to preserve the right to review in the United States District Court for the District of Columbia of the USPTO patent term adjustment determination, patentee must ensure that he or she also take the steps required under 35 U.S.C. 154(b)(4)(A) in a timely manner. Nothing in the request for recalculation should be construed as providing an alternative time frame for commencing a civil action under 35 U.S.C. 154(b)(4)(A).

Any questions concerning this decision should be directed to the Office of Patent Legal Administration at 571-272-7702.

UNITED STATES PATENT AND TRADEMARK OFFICE

UNITED STATES DEPARTMENT OF COMMERCE
United States Patent and Trademark Office
Address: COMMISSIONER FOR PATENTS
P.O. Box 1450
Alexandria, Virginia 22313-1450
www.uspto.gov

KLARQUIST SPARKMAN, LLP
121 S.W. SALMON STREET
SUITE #1600
PORTLAND, OR 97204-2988

Mail Date: 05/17/2010

Applicant : Syed V.S. Kashmiri
Patent Number : 7569673
Issue Date : 08/04/2009
Application No : 10/519,580
Filed : 07/11/2005

: NOTICE CONCERNING IMPROPER
: CALCULATION OF PATENT TERM
: ADJUSTMENT BASED UPON USPTO
: IMPROPERLY MEASURING REDUCTION
: PERIOD UNDER 37 CFR 1.704(c)(10).

The United States Patent and Trademark Office (USPTO) discovered that in processing the recent recalculation decisions mailed in response to patentee's filed Request for Recalculation of Patent Term Adjustment in view of Wyeth, the USPTO improperly measured the reduction period for reductions under 37 CFR 1.704(c)(10). Pursuant to 37 CFR 1.704(c)(10), patentee's reduction begins on the date of filing the amendment under 37 CFR 1.312 ("1.312 amendment") or other related paper and ends on the date that the Office mails a response to the filing of the 1.312 amendment or other paper. It has been discovered that during the recalculation, the calculation failed to the limit the reduction to the mail date of the response to the 1.312 amendment or other paper. Accordingly, patentee's reductions were greater than warranted.

This notice **VACATES** the previous GRANTED request for recalculation and provides patentee with a revised GRANTED recalculation.

The patent term adjustment has been determined to be **794** days. The USPTO will *sua sponte* issue a certificate of correction reflecting the amount of patent term adjustment (PTA) days determined by the recalculation.

Prior to the issuance of the certificate of correction, the USPTO will afford patentee an opportunity to be heard and request reconsideration. Accordingly, patentee has **one month or thirty (30) days** from the mail date of this notice, whichever is longer, to file a request for reconsideration of this PTA calculation. See 35 U.S.C. § 154(b)(3)(B)(ii) and 37 CFR 1.322(a)(4).

Patentee should use document code PET.OP if electronically filing a request for reconsideration of this PTA calculation. The patentee must also include the information required by 37 CFR 1.705(b)(2), and the fee required by 37 CFR 1.18(e). If patentee does not file a timely request for reconsideration of this PTA calculation, including the information required by 37 CFR 1.705(b)(2) and the fee required by 37 CFR 1.18(e), the USPTO will issue a certificate of correction reflecting the PTA determination noted above.

Patentee should be aware that in order to preserve the right of review of the USPTO's PTA determination in the United States District Court for the District of Columbia, patentee must ensure that the steps required under 35 U.S.C. § 154 (b)(4) are taken in a timely manner. Nothing in the request for recalculation should be construed as providing an alternative time frame for commencing a civil action under 35 U.S.C. § 154(b)(4).

UNITED STATES PATENT AND TRADEMARK OFFICE

Commissioner for Patents
United States Patent and Trademark Office
P.O. Box 1450
Alexandria, VA 22313-1450
www.uspto.gov

NXP, B.V.
NXP INTELLECTUAL PROPERTY DEPARTMENT
M/S41-SJ
1109 MCKAY DRIVE
SAN JOSE CA 95131

COPY MAILED
NOV 17 2008

In re Application of	:	
Martin POSCH et al.	:	
Application No. 10/519,592	:	ON PETITION
Filed: December 27, 2004	:	
Attorney Docket No. AT02 0042 US	:	

This is a decision on the petition under the unintentional provisions of 37 CFR 1.137(b), filed October 23, 2008, to revive the above-identified application.

The petition is **GRANTED**.

The application became abandoned for failure to timely file a reply within the meaning of 37 CFR 1.113 to the final Office action of January 31, 2008. The proposed reply required for consideration of a petition to revive must be a Notice of Appeal (and appeal fee required by 37 CFR 41.20(b)(2), an amendment that *prima facie* places the application in condition for allowance, a Request for Continued Examination and submission (37 CFR 1.114), or the filing of a continuing application under 37 CFR 1.53(b). See MPEP 711.03(c)(III)(A)(2). No extensions of time pursuant to the provisions of 37 CFR 1.136(a) were obtained. Accordingly, the date of abandonment of this application is May 1, 2008.

The petition satisfies the requirements of 37 CFR 1.137(b) in that petitioner has supplied (1) the reply in the form of a Request for Continued Examination (RCE) and fee of $ 810, and the submission required by 37 CFR 1.114; (2) the petition fee of $ 1620; and (3) a proper statement of unintentional delay.

It is not apparent whether the person signing the statement of unintentional delay was in a position to have firsthand or direct knowledge of the facts and circumstances of the delay at issue. Nevertheless, such statement is being treated as having been made as the result of a reasonable inquiry into the facts and circumstances of such delay. See 37 CFR 10.18(b) and Changes to Patent Practice and Procedure; Final Rule Notice, 62 Fed. Reg. 53131, 53178 (October 10, 1997), 1203 Off. Gaz. Pat. Office 63, 103 (October 21, 1997). In the event that such an inquiry has not been made, petitioner must make such an inquiry. If such inquiry results in the discovery that it is not correct that the entire delay in filing the required reply from the due

date for the reply until the filing of a grantable petition pursuant to 37 CFR 1.137(b) was unintentional, petitioner must notify the Office.

Telephone inquiries concerning this decision should be directed to Karin Reichle at (571) 272-6051.

This application is being referred to Technology Center AU 2863 for processing and for appropriate action by the Examiner in the normal course of business.

David Bucq
Petitions Examiner
Office of Petitions

UNITED STATES PATENT AND TRADEMARK OFFICE

Commissioner for Patents
United States Patent and Trademark Office
P.O. Box 1450
Alexandria, VA 22313-1450
www.uspto.gov

ERICSSON INC.
6300 LEGACY DRIVE
M/S EVR 1-C-11
PLANO TX 75024

COPY MAILED
DEC 16 2008

In re Application of	:	
Lindskog, et al.	:	
Application No. 10/519,606	:	DECISION ON PETITION
Filed: July 25, 2005	:	
Attorney Docket No. P17223-US1	:	

This is a decision on the petition under the unintentional provisions of 37 CFR 1.137(b), filed November 25, 2008, to revive the above-identified application.

The petition is **GRANTED**.

The application became abandoned May 20, 2008 for failure to timely submit a proper reply to the non-final Office action mailed March 19, 2008. The non-final Office action set a three month shortened statutory period of time for reply. Notice of Abandonment was mailed September 29, 2008.

The petition satisfies the requirements of 37 CFR 1.137(b) in that petitioner has supplied (1) the reply to the non-final Office action, (2) the required petition fee, and (3) a proper statement of unintentional delay.

Telephone inquiries concerning this decision should be directed to the undersigned at (571) 272-3205.

This application is being referred to Technology Center AU 2165 for appropriate action by the Examiner in the normal course of business on the reply received November 25, 2008.

Alesia M. Brown
Petitions Attorney
Office of Petitions

UNITED STATES PATENT AND TRADEMARK OFFICE

COMMISSIONER FOR PATENTS
UNITED STATES PATENT AND TRADEMARK OFFICE
P.O. BOX 1450
ALEXANDRIA, VA 22313-1450
www.uspto.gov

OLIFF & BERRIDGE, PLC
P.O. BOX 19928
ALEXANDRIA VA 22320

COPY MAILED

JUL 26 2006

OFFICE OF PETITIONS

Applicant: Barscevicus et al.
Appl. No.: 10/519,628
Filing Date: July 23, 2003
Title: METHOD AND APPARATUS FOR MEASURING AND ADJUSTING THE SETTING OF A CRUSHER
Attorney Docket No.: 122255
Pub. No.: US 2006/0108465 A1
Pub. Date: May 25, 2006

This is a decision on the request for corrected of patent application publication under 37 CFR 1.221(b), received on June 26, 2006, for the above-identified application.

The request is granted.

Applicant requests that the application be republished because the patent application publication contains a material error, as the Office published a reference that was submitted in an Information Disclosure Statement.

The corrected patent application publication will be published in due course.

It would greatly benefit the Office if **applicant did not provide copies of the application papers**, which were previously submitted, as it unnecessarily increases the cost to the Office. See 37 CFR 1.4(b). A request for corrected publication need only point out what was printed incorrectly in the application, where the error occurs in the publication and where the correct text or drawing is found in the application papers. Marked up relevant copies of the applications papers and the pre-grant publication may facilitate processing of the request, where it is not readily apparent where the error occurs. If it is not clear why the error is a material error, further explanation may be warranted.

Inquiries relating to this matter may be directed to Mark O. Polutta at (571) 272-7709 (voice).

Mark O. Polutta
Office of Patent Legal Administration
Office of the Deputy Commissioner
for Patent Examination Policy

02 MAR 2006

#5

UNITED STATES PATENT AND TRADEMARK OFFICE

Commissioner for Patents
United States Patent and Trademark Office
P.O. Box 1450
Alexandria, VA 22313-1450
www.uspto.gov

Diane L. Marschang
GENENTECH, INC.
1 DNA Way
South San Francisco, CA 94030

In re Application of KELLEY, et al. U.S. Application No.: 10/519,647 PCT No.: PCT/US03/19750 Int. Filing Date: 23 June 2003 Priority Date: 24 June 2002 Attorney Docket No.: P1966R1 For: APO-2 LIGAND/TRAIL VARIANTS AND USES THEREOF	DECISION ON PETITION UNDER 37 CFR 1.47(a)

This decision is in response to applicant's "Petition To Accept Application Under 37 CFR 1.47(a)" filed 10 January 2006 in the United States Patent and Trademark Office (USPTO).

BACKGROUND

On 29 June 2003, applicant filed international application PCT/US03/19750, which claimed a priority date of 24 June 2002. Pursuant to 37 CFR 1.495, the deadline for payment of the basic national fee in the United States was to expire 30 months from the priority date, 24 December 2004.

On 22 December 2004, applicant filed a transmittal letter for entry into the national stage in the United States accompanied by the requisite basic national fee and an Information Disclosure Statement.

On 03 August 2005, applicant was mailed a "NOTIFICATION OF MISSING REQUIREMENTS UNDER 35 U.S.C. 371" (Form PCT/DO/EO/905) informing applicant of the need to provide an oath or declaration of the inventors, in compliance with 37 CFR 1.497(a) and (b), identifying the application by the International application number and international filing date. Applicant was afforded two months to file the proper reply and informed that this period could be extended pursuant to 37 CFR 1.136(a).

On 10 January 200, applicant filed the present petition under 37 CFR 1.47(a) accompanied by a petition for a five-month extension of time and payment of the appropriate five-month extension fee. With the filing of the extension of time petition and payment of the extension fee, applicant's response is considered timely filed.

DISCUSSION

A petition under 37 CFR 1.47(a) must be accompanied by (1) the fee under 37 CFR 1.17(g), (2) factual proof that the missing joint investor refuses to execute the application or cannot be reached after diligent effort, (3) a statement of the last known address of the missing inventor, and (4) an oath or declaration by each 37 CFR 1.47(a) applicant on his or her own behalf and on behalf of the non-signing joint inventor. Applicant has satisfied all four items.

Regarding item (1), applicant has provided payment of $130.00. Applicant is advised that the petition fee for a petition under 37 CFR 1.47 is $200.00 pursuant to 37 CFR 1.17(g). As authorized, $70.00 will be charged to deposit account number 07-0630.

As to item (2), the Manual of Patent Examining Procedure (MPEP) at section 409.03(d) explains that in a situation where the non-signing inventor cannot be located:

The statement of facts must be signed, where at all possible, by a person having firsthand knowledge of the facts recited therein. Statements based on hearsay will not normally be accepted. Copies of documentary evidence such as internet searches, certified mail return receipts, cover letters of instructions, telegrams, that support a finding that the nonsigning inventor could not be found or reached should be made part of the statement. The steps taken to locate the whereabouts of the nonsigning inventor should be included in the statement of facts. It is important that the statement contain facts as opposed to conclusions.

Applicant has provided sufficient evidence to show that Ms. Lindstrom could not be located. Specifically, applicant has included a signed declaration of Ms. Mona Beltran detailing her efforts to locate Ms. Lindstrom, including searching the internet. In addition, applicant has included a copy of the internet search results.

Regarding item (3), applicant has provided the last known address of the non-signing inventor.

As to item (4), applicant has filed a compliant declaration of the inventors executed by the remaining inventors on their own behalf and on behalf of the non-signing inventor.

Accordingly, it is proper to grant applicant's petition at this time.

CONCLUSION

For the reasons above, applicant's petition under 37 CFR 1.47(a) is **GRANTED**.

The application has an international filing date of 23 June 2003 under 35 U.S.C. 363, and will be given a date of **10 January 2006** under 35 U.S.C. 371(c)(1), (c)(2) and (c)(4).

As provided in 37 CFR 1.47(c), a notice of the filing of this application will be forwarded to the non-signing inventor at his last known address of record. A notice of the filing of the application under 37 CFR 1.47(a) will be published in the Official Gazette.

This application is being returned to the DO/EO/US for processing in accordance with this decision. Specifically, the mailing of a Notification of Acceptance (Form PCT/DO/EO/903).

Derek A. Putonen
Attorney Advisor
Office of PCT Legal Administration
Tel: (571) 272-3294
Fax: (571) 273-0459

02 MAR 2006

UNITED STATES PATENT AND TRADEMARK OFFICE

Commissioner for Patents
United States Patent and Trademark Office
P.O. Box 1450
Alexandria, VA 22313-1450
www.uspto.gov

Ms. Stephanie Ho Lindstrom
20 Quenn Anne Court
Millbrae, CA 94030

In re Application of
KELLEY, et al.
U.S. Application No.: 10/519,647
PCT No.: PCT/US03/19750
Int. Filing Date: 23 June 2003
Priority Date: 24 June 2002
Attorney Docket No.: P1966R1
For: APO-2 LIGAND/TRAIL VARIANTS AND USES THEREOF

Dear Ms. Lindstrom:

You are named as an inventor in the above identified United States patent application, filed under the provisions of 37 CFR 1.47(a) and 35 U.S.C. 116. Should a patent be granted, you will be designated as an inventor. As a named inventor, you are entitled to inspect any paper in the file wrapper of the application, order copies of all or any part thereof (at a prepaid cost per 37 CFR 1.19) or to make your position of record in the application. Alternately, you may arrange to do any of the preceding through a registered patent agent or attorney presenting written authorization from you. If you care to join in the application, the law firm of record (see below) would presumably assist you. Joining in the application would entail the filing of the appropriate oath or declaration by you pursuant to 37 CFR 1.63.

Derek A. Putonen
Attorney Advisor
Office of PCT Legal Administration
Tel: (571) 272-3294
Fax: (571) 273-0459

Diane L. Marschang
GENENTECH, INC.
1 DNA Way
South San Francisco, CA 94030

UNITED STATES PATENT AND TRADEMARK OFFICE

Commissioner for Patents
United States Patent and Trademark Office
P.O. Box 1450
Alexandria, VA 22313-1450
www.uspto.gov

FISH & RICHARDSON PC
P.O. BOX 1022
MINNEAPOLIS, MN 55440-1022

COPY MAILED

OCT 28 2008

OFFICE OF PETITIONS

In re Application of :
Ian D. French et al :
Application No. 10/519,650 :
Filed: December 30, 2004 :
Attorney Docket No. 14509-0123US1 / :
P080480AT

ON PETITION

This is a decision on the petition under the unintentional provisions of 37 CFR 1.137(b), filed July 9, 2008, to revive the above-identified application.

The petition is **GRANTED**.

The application became abandoned for failure to timely file a reply within the meaning of 37 CFR 1.113 to the final Office action of September 28, 2007. The proposed reply required for consideration of a petition to revive must be a Notice of Appeal (and appeal fee required by 37 CFR 41.20(b)(2), an amendment that *prima facie* places the application in condition for allowance, a Request for Continued Examination and submission (37 CFR 1.114), or the filing of a continuing application under 37 CFR 1.53(b). See MPEP 711.03(c)(III)(A)(2). No extension of time pursuant to the provisions of 37 CFR 1.136(a) was obtained. Accordingly, the date of abandonment of this application is December 29, 2007.

The petition satisfies the requirements of 37 CFR 1.137(b) in that petitioner has supplied (1) the reply in the form of a Request for Continued Examination (RCE) and fee of $810 and the submission required by 37 CFR 1.114; (2) the petition fee of $1540; and (3) a proper statement of unintentional delay.

Telephone inquiries concerning this decision should be directed to the undersigned at (571) 272-3210.

This application is being referred to Technology Center AU 2818 for processing of the RCE and for appropriate action by the Examiner in the normal course of business on the amendment submitted in accordance with 37 CFR 1.114.

Irvin Dingle
Petition Examiner
Office of Petitions

UNITED STATES PATENT AND TRADEMARK OFFICE

Commissioner for Patents
United States Patent and Trademark Office
P.O. Box 1450
Alexandria, VA 22313-1450
www.uspto.gov

July 20, 2009

Norman H. Zivin
c/o Cooper & Dunham LLP
30 Rockefeller Plaza
New York, NY 10036

Patent No: 7,548,857 B2
Application No.: 10/519,653
Inventor(s): Klaus Dieter Liedtke, et al.
Issued: June 16, 2009
Title: **METHOD FOR NATURAL VOICE RECOGNITION BASED ON A GENERATIVE TRANSFORMATION/PHASE STRUCTURE GRAMMAR**

Re: Request for Certificate of Correction

Consideration has been given your request for the issuance of a certificate of correction for the above-identified patent under the provisions of Rule(s) 1.322 and/or 1.323.

Assignees' names and addresses (assignment data) printed in a patent, are based *solely* on information supplied in the appropriate space for identifying the assignment data, i.e., item 3 of the Issue Fee Transmittal Form PTOL-85B. Granting of a request under 37 CFR 3.81(b) is required to correct applicant's error providing ***incorrect or erroneous*** assignment data, *before* issuance of a Certificate of Correction, under 37 CFR 1.323 *(see Manual of Patent Examining Procedures (M.P.E.P) Chp.1400, sect. 1481).* This procedure is required *at any time after the issue fee is paid*, including after issuance of the patent.

In view of the foregoing, your request, in this matter, is hereby denied.

A request to correct the Assignee under 37 CFR 3.81(b) should include:

A. **the processing fee set forth in 37 CFR 1.117(h) (currently $130);**
B. a statement that the failure to include the correct assignee name on the PTOL-85B was inadvertent; and
C. a copy of the Notice of Recordation of Assignment Document, reflecting the reel and frame number where the assignment(s) is recorded and/or reflecting proof of *the date* the assignment was submitted for recordation.

In the Request, Applicant(s) may request that the file be forwarded to Certificates of Correction Branch, for issuance of a Certificate of Correction, if the Request is granted.

Any request under 37 CFR 3.81(b) should be directed to the following address or facsimile number:

By mail:	Mail Stop PETITIONS Commissioner for Patents Post Office Box 1450 Alexandria, VA 22313-1450
By hand:	Customer Service Window Mail Stop Petitions Randolph Building 401 Dulany Street Alexandria, VA 22314
By fax:	(571) 273-0025 ATTN: Office of Petitions

If a fee (currently $100) was previously submitted for consideration of a Request for Certificate of Correction, under CFR 1.323, to correct assignment data, no additional fee is required.

Virginia Tolbert
For Mary Diggs, Supervisor
Decisions & Certificate of Correction Branch
(703) 756-1591

vt

UNITED STATES PATENT AND TRADEMARK OFFICE

Commissioner for Patents
United States Patent and Trademark Office
P.O. Box 1450
Alexandria, VA 22313-1450
www.uspto.gov

UNILEVER PATENT GROUP
800 SYLVAN AVENUE
AG WEST S. WING
ENGLEWOOD CLIFFS, NJ 07632-3100

MAILED

MAR 03 2009

OFFICE OF PETITIONS

In re Application of	:	
Cinderella Christina GERHARDT, et al	:	
Application No. 10/519,657	:	DECISION ON PETITION
Filed: December 22, 2004	:	
Attorney Docket No. F7649(V)	:	

This is a decision on the petition under the unintentional provisions of 37 CFR 1.137(b), filed January 20, 2009, to revive the above-identified application.

The petition is **GRANTED**.

The application became abandoned for failure to reply in a timely manner to the non-final Office action mailed, April 7, 2008, which set a shortened statutory period for reply of three (3) months. No extensions of time under the provisions of 37 CFR 1.136(a) were obtained. Accordingly, the application became abandoned on July 8, 2008.

The petition satisfies the requirements of 37 CFR 1.137(b) in that petitioner has supplied (1) the reply in the form of an amendment, (2) the petition fee of $1620; and (3) the required statement of unintentional delay.

37 CFR 1.137(b)(3) requires a statement that "the entire delay in filing the required reply from the due date for the reply until the filing of a grantable petition pursuant to 37 CFR 1.137(b) was unintentional." Since the statement appearing in the petition varies from the language required by 37 CFR 1.137(b)(3), the statement is being construed as the required statement. Petitioner must notify the Office if this is **not** a correct reading of the statement appearing in the petition.

Telephone inquiries concerning this decision should be directed to Diane Goodwyn at (571) 272-6735.

This application is being referred to Technology Center AU 1654 for appropriate action by the Examiner in the normal course of business on the reply received January 20, 2009.

Thurman K. Page

Thurman Page
Petitions Examiner
Office of Petitions

"Grantable" missing from statement

Attorney Docket No.: F7649(V)
Serial No.: 10/519,657
Filed: December 22, 2004
Confirmation No.: 9203

PETITION TO THE COMMISSIONER UNDER 37 C.F.R. § 1.137(b) TO REVIVE AN UNINTENTIONALLY ABANDONED APPLICATION

Sir:

Applicants submit this Petition to the Commissioner under 37 C.F.R. 1.137(b) for revival of the above-identified application which became abandoned for failure to reply to the Office Action dated April 7, 2008. If required, please deduct from Deposit Account No. 12-1155 a fee for a three month extension of time which would have been required to extend the period of time for responding to the April 7, 2008 Office Action from July 7, 2008 to October 7, 2008.

Please deduct One Thousand, Five Hundred and Forty Dollars ($1,540.00) from Deposit Account No. 12-1155 for filing a petition to revive.

On April 21, 2008, applicants' attorney filed an Information Disclosure statement via EFS. The EFS receipt for this submittal was processed by our Office Manager (Linda M. Horvath), who unintentionally entered the IDS submission as if it were a reply to the outstanding Office Action. As the consequence of this mistaken entry, the attorney's due date docket no longer listed the due date for the response to the Office Action. Please see the supporting Declaration by Linda M. Horvath.

The subject application was abandoned when applicants failed to send in the response to the Office Action. This abandonment was unintentional since it was applicants' attorney's intention to submit the Response to the Office Action. It was clearly not applicants' nor applicants' attorney's intention to fail to submit the response to the outstanding Office Action.

Attorney Docket No.: F7649(V)
Serial No.: 10/519,657
Filed: December 22, 2004
Confirmation No.: 9203

The failure to submit the response only recently come to applicants' attorney's attention upon the receipt of unexpected Notice of Abandonment.

As indicated by the foregoing remarks, applicants did not intend to abandon the subject application. The entire delay in filing the required reply from the due date for the reply until the filing of this petition was unintentional.

In accordance with 37 C.F.R. § 1.137(b):

(1) Applicants again state that abandonment of the application was unintentional and the entire delay in filing the required reply from the due date for the reply until the filing of this petition was unintentional.

(2) a proposed Amendment and Response to the Office Action dated April 7, 2008 and Supplemental Information Disclosure are being filed at this time; and

(3) authorization has been given to pay the petition fee set forth in § 1.17(m).

Since applicants have complied with all the requirements set forth in the rules, applicants respectfully request that the subject application be revived.

If any fees, other than the petition fee are deemed necessary in connection with filing of this petition, authorization is hereby given to charge the amount of such fee to Deposit Account No. 1201155.

Respectfully submitted,

Rimma Mitelman
Registration No. 34,396
Agent for Applicant(s)

RM/sa
(201)894-2671

Attorney Docket No.: F7649(V)
Serial No.: 29/247,372
Filed: June 14, 2006
Confirmation No.: 7053

DECLARATION

Sir:

I, Linda M. Horvath, residing at of 44 Heuer Street, Little Ferry, New Jersey 07643 declare as follows:

1. I am a citizen of the United States.

2. I am employed by Unilever United States, Inc., in the Patent Group. My title is Manager, Patent Administration. Our Group handles patent prosecution and other patent related work for Unilever Bestfoods, Conopco, Inc. to whom the above-identified application is assigned.

3. I know that the Patent Office has mailed a Notice of Abandonment in the above-identified application.

4. I remember and I have a record (attached) of processing the Submission of the Information Disclosure Statement submitted on 21 April 2008 to the Patent Office. I entered this submission into our internal docketing system. I believe that I mistakenly checked off that the Response was submitted to the outstanding Office Action dated April 7, 2008 instead of processing it as an IDS submission. Once the response is checked off as "taken", the corresponding action will not come up on the docket of due dates for an attorney. Consequently, the due date of the Office Action dated April 7, 2008 did not appear on the attorney's docket. The mistake was realized when the Notice of Abandonment was received by our Patent Group.

Attorney Docket No.: F7649(V)
Serial No.: 29/247,372
Filed: June 14, 2006
Confirmation No.: 7053

5. My mistake was unintentional and it did not reflect anyone's intention to not respond to an outstanding Office Action.

6. I hereby declare that all statement made herein of my own knowledge are true and that all statements made on information and belief are believed to be true; and further that these statements were made with the knowledge that wilful false statements and the like so made are punishable by fine or imprisonment, or both, under section 1001 of Title 18 of the United States Code, and that such wilful false statements may jeopardize the validity of the application or of any patent issuing thereon.

11/15/09
Date

Linda M. Horvath

Electronic Acknowledgement Receipt

EFS ID:	3184132
Application Number:	10519657
International Application Number:	
Confirmation Number:	9203
Title of Invention:	Satiety inducing composition
First Named Inventor/Applicant Name:	Cinderella Christina Gerhardt
Customer Number:	201
Filer:	Milton L. Honig/Marypat Kieselbach
Filer Authorized By:	Milton L. Honig
Attorney Docket Number:	~~F76~~49(V)
Receipt Date:	21-APR-2008
Filing Date:	22-DEC-2004
Time Stamp:	16:32:20
Application Type:	U.S. National Stage under 35 USC 371

Payment information:

Submitted with Payment	yes
Payment Type	Deposit Account
Payment was successfully received in RAM	$ 180
RAM confirmation Number	1907
Deposit Account	121155
Authorized User	

The Director of the USPTO is hereby authorized to charge indicated fees and credit any overpayment as follows:

Charge any Additional Fees required under 37 C.F.R. 1.492 (National application filing, search, and examination fees)

Charge any Additional Fees required under 37 C.F.R. Section 1.17 (Patent application and reexamination processing fees)

Charge any Additional Fees required under 37 C.F.R. Section 1.19 (Document supply fees)

Charge any Additional Fees required under 37 C.F.R. Section 1.20 (Post Issuance fees)

Charge any Additional Fees required under 37 C.F.R. Section 1.21 (Miscellaneous fees and charges)

File Listing:

Document Number	Document Description	File Name	File Size(Bytes) /Message Digest	Multi Part /.zip	Pages (if appl.)
1	Information Disclosure Statement Letter	F7649-IDS042108.pdf	83982 cf6362bc4ab92fa3f0636ebbc4f39049f6a0910d	no	2
Warnings:					
Information:					
2	Information Disclosure Statement (IDS) Filed	F7649-PTO1449042108.pdf	84270 c279adf05d91a2f6cb140a4d9a94a2f41c675351	no	1
Warnings:					
Information:					
This is not an USPTO supplied IDS fillable form					
3	Foreign Reference	F7649-Foreign.pdf	6668742 f7b4449330da93f12a239dcf0c3b5b0d55681be9	no	126
Warnings:					
Information:					
4	Fee Worksheet (PTO-06)	fee-info.pdf	8193 5d4591e96d3c26e7a7e2ea9fcb32890ff120626c	no	2
Warnings:					
Information:					
		Total Files Size (in bytes):	6845187		

RAM Fee History Query

Revenue Accounting and Management

Name/Number: 10519657 Total Records Found: 17

Start Date: Any Date End Date: Any Date

Accounting Date	Sequence Num.	Fee Type	Fee Code	Fee Amount	Mailroom Date	Payment Method
01/21/2009	00017335	4	1453	$1,620.00	01/20/2009	DA 121155
01/21/2009	00017336	4	1806	$180.00	01/20/2009	DA 121155
09/15/2008	00010880	4	1806	$180.00	09/15/2008	DA 121155
05/14/2008	00004252	4	1806	$180.00	05/13/2008	DA 121155
04/22/2008	00003133	4	1806	$180.00	04/21/2008	DA 121155
03/04/2008	00005659	4	1252	$460.00	03/03/2008	DA 121155
03/04/2008	00005664	4	1806	$180.00	03/03/2008	DA 121155
03/04/2008	00005660	4	1801	$810.00	03/03/2008	DA 121155
02/26/2008	00013559	4	1806	$180.00	02/26/2008	DA 121155
08/14/2007	00004166	4	1251	$120.00	08/13/2007	DA 121155
12/16/2005	00000395		8021	$40.00	10/18/2005	DA 121155
08/25/2005	00000007	1	1201	$200.00	12/22/2004	DA 121155
06/27/2005	00000007	1	1632	-$500.00	12/22/2004	DA 121155
06/27/2005	00000008	1	1642	$400.00	02/01/2005	DA 121155
01/11/2005	00000375	1	1631	$300.00	12/22/2004	DA 121155
01/11/2005	00000376	1	1632	$500.00	12/22/2004	DA 121155
01/11/2005	00000377	1	1633	$200.00	12/22/2004	DA 121155

UNITED STATES PATENT AND TRADEMARK OFFICE

Commissioner for Patents
United States Patent and Trademark Office
P.O. Box 1450
Alexandria, VA 22313-1450
www.uspto.gov

7-9-09

Patent No. : 7,524,974
Ser. No. : 10/519,682
Inventor(s) : Nagano, et. al.
Issued : April 28, 2009

Re: Request for Certificate of Correction

Consideration has been given your request for the issuance of a certificate of correction for the above-identified patent under the provisions of Rule(s) 1.322.

Assignees' names and addresses (assignment data) printed in a patent, are based *solely* on information supplied in the appropriate space for identifying the assignment data, i.e., item 3 of the Issue Fee Transmittal Form PTOL-85B. Granting of a request under 37 CFR 3.81(b) is required to correct applicant's error providing ***incorrect or erroneous*** assignment data, *before* issuance of a Certificate of Correction, under 37 CFR 1.323 *(see Manual of Patent Examining Procedures (M.P.E.P) Chp.1400, sect. 1481).* This procedure is required *at any time after the issue fee is paid*, including after issuance of the patent.

In view of the foregoing, your request is hereby denied.

A request to correct the Assignee under 37 CFR 3.81(b) should include:

A. **the processing fee set forth in 37 CFR 1.117(h) (currently $130);**
B. a statement that the failure to include the correct assignee name on the PTOL-85B was inadvertent; and
C. a copy of the Notice of Recordation of Assignment Document, reflecting the reel and frame number where the assignment(s) is recorded and/or reflecting proof of *the date* the assignment was submitted for recordation.

In the Request, Applicant(s) may request that the file be forwarded to Certificates of Correction Branch, for issuance of a Certificate of Correction, if the Request is granted.

Any request under 37 CFR 3.81(b) should be directed to the following address or facsimile number:

By mail: Mail Stop PETITIONS
Commissioner for Patents
Post Office Box 1450
Alexandria, VA 22313-1450

By hand: Customer Service Window
Mail Stop Petitions
Randolph Building
401 Dulany Street
Alexandria, VA 22314

By fax: (703) 872-9306
ATTN: Office of Petitions

If a fee (currently $100) was previously submitted for consideration of a Request for Certificate of Correction, under CFR 1.323, to correct assignment data, , no additional fee is required.

Eva James
For Mary Diggs
Decisions & Certificates
of Correction Branch
(703) 756-1583 or 1580

GreenBlum & Bernstein, P.L.C.
1950 Roland Clarke Place
Restson, VA 20191-1411

ej

UNITED STATES PATENT AND TRADEMARK OFFICE

Commissioner for Patents
United States Patent and Trademark Office
P.O. Box 1450
Alexandria, VA 22313-1450
www.uspto.gov

GREENBLUM & BERNSTEIN, P.L.C.
1950 ROLAND CLARKE PLACE
RESTON VA 20191

COPY MAILED

SEP 1 5 2009

OFFICE OF PETITIONS

In re Patent No. 7,524,974	:	
Issue Date: April 28, 2009	:	
Application No. 10/519,682	:	ON PETITION
Filed: August 15, 2005	:	
Attorney Docket No. P26478	:	

This is a decision on the petition filed August 6, 2009, which is being treated as a request under 37 CFR 3.81(b)[1] to correct the name of the assignee on the front page of the above-identified patent by way of a Certificate of Correction.

The request is GRANTED.

Telephone inquiries concerning this decision may be directed to the JoAnne Burke at (571) 272-4584. Inquiries regarding the issuance of a certificate of correction should be directed to the Certificate of Correction Branch at (571) 272-4200.

As authorized, the $130 fee for the petition under 37 CFR 3.81(b) has been assessed to petitioner's deposit account.

The Certificates of Correction Branch will be notified of this decision granting the petition under 37 CFR 3.81(b) and directing issuance of the requested Certificate of Correction.

JoAnne Burke
Petitions Examiner
Office of Petitions

[1] *See* MPEP 1309, subsection II; and Official Gazette of June 22, 2004.

UNITED STATES PATENT AND TRADEMARK OFFICE

UNITED STATES DEPARTMENT OF COMMERCE
United States Patent and Trademark Office
Address: COMMISSIONER FOR PATENTS
P.O. Box 1450
Alexandria, Virginia 22313-1450
www.uspto.gov

APPLICATION NO.	FILING DATE	FIRST NAMED INVENTOR	ATTORNEY DOCKET NO.	CONFIRMATION NO.
10/519,685	05/04/2005	Giampiero De Luca	263388US0PCT	9272

EXAMINER
CHONG, YONG SOO

ART UNIT	PAPER NUMBER
1617	

NOTIFICATION DATE	DELIVERY MODE
12/18/2008	ELECTRONIC

7590 12/18/2008
OBLON, SPIVAK, MCCLELLAND MAIER & NEUSTADT, P.C.
1940 DUKE STREET
ALEXANDRIA, VA 22314

DECISION DISMISSING PETITION UNDER 37 CFR 1.138(d)

The declaration of express abandonment will not be recognized

This is in response to the petition under 37 CFR 1.138(d), requesting for a refund of any previously paid search fee and excess claims fee in the above-identified application.

The petition is dismissed.

The express abandonment will **not** be recognized for the reason(s) indicated below:

1. ☐ The petition was not filed in sufficient time to permit the appropriate officials to recognize the abandonment before an examination has been made of the application. See 37 CFR 1.138(d).
2. ☐ The petition was not signed by a party authorized by 37 CFR 1.33(b)(1), (3) or (4).
3. ☑ The application is not an application filed under 35 U.S.C. 111(a) on or after December 8, 2004.
4. ☐ The petition for express abandonment under 1.138(d) is dismissed because the applicant did not pay any search fee and excess claims fees in the above-identified application.

Telephone inquiries should be directed to the Office of Data Management at (571) 272-4200.

Tom Farmer

Patent Publication Branch
Office of Data Management

#5

UNITED STATES PATENT and TRADEMARK OFFICE

COMMISSIONER FOR PATENTS
UNITED STATES PATENT AND TRADEMARK OFFICE
P.O BOX 1450
ALEXANDRIA, VA 22313-1450
www.uspto.gov

30 JAN 2006

SALTAMAR INNOVATIONS
30 FERN LANE
SOUTH PORTLAND ME 04106

In re Application of	:	DECISION ON
HASMAN, Erez:	:	
Application No. 10/519,701	:	
PCT No.: PCT/IL2003/000541	:	
Int. Filing Date: 26 June 2003	:	
Priority Date: 28 June 2002	:	PETITION UNDER
Attorney's Docket No.: 0421US-Hasman	:	
For: GEOMETRICAL PHASE OPTICAL	:	
ELEMENTS WITH SPACE-VARIANT	:	
SUBWAVELENGTH GRATINGS	:	37 CFR 1.137 (b)

This decision is in response to applicant's' "PETITION FOR REVIAVAL OF AN APPLICATION FOR PATENT ABANDONED UNINTENTIONALLY UNDER 37 CFR 1.137(b)," filed on 05 January 2006.

BACKGROUND

On 26 June 2003, this international application was filed, claiming an earliest priority date of 28 June 2002. The deadline for paying the basic national fee in the United States under 35 U.S.C. 371 and 37 CFR 1.495 was 28 December 2004.

On 24 December 2004, applicant filed a Transmittal letter for entry into the national stage in the United States Patent and Trademark Office (USPTO), which was accompanied by, the basic national fee. No executed declaration or oath was filed at such time.

On 16 June 2005, the United States Designated/Elected Office mailed a Notification of Missing Requirements under 35 U.S.C. 371 (Form PCT/DO/EO/905) indicating that the oath or declaration complying with 37 CFR 1.497(a) and (b), identifying the application by the International application number and International filing date must be furnished within the time period set forth. The notification set a two months time limit or 32 months from the priority date for the application, whichever is later to respond, and that failure to properly respond would result in abandonment

On 05 January 2006, applicants filed the instant petition under 37 CFR 1.137(b).

DISCUSSION

A grantable petition to revive an abandoned application under 37 CFR 1.137(b) must be accompanied by (1) the required reply, unless previously filed. In a nonprovisional application abandoned for failure to prosecute, the required reply may be met by the filing of a continuing application; (2) the petition fee as set forth in § 1.17(m); and (3) a statement that the entire delay in filing the required reply from the due date for the reply until the filing of a grantable petition pursuant to this paragraph was unintentional. The Commissioner may require additional information where there is a question whether the delay was unintentional; and (4) any terminal disclaimer (and fee as set forth in § 1.20 (d)) required pursuant to paragraph (c) of this section.

Petitioner has provided: (1) the proper reply by submitting an executed declaration, (2) the petition fee set forth in §1.17(m) and (3) the proper statement under 137(b)(3). In this application, no terminal disclaimer is required.

Accordingly, the petition is deemed to satisfy requirements (1) - (4) under 37 CFR 1.137(b).

DECISION

The petition under 37 CFR 1.137(b) is **GRANTED**.

This application is being returned to the United States Designated/Elected Office (DO/EO/US) for continued processing. The 35 USC 371(c)(1),(c)(2), and (c)(4) date of this application is **05 January 2006.**

Rafael Bacares
PCT Legal Examiner
PCT Legal Office
Telephone: (571) 272-3276
Facsimile: (571) 273-0459

UNITED STATES PATENT AND TRADEMARK OFFICE

Commissioner for Patents
United States Patent and Trademark Office
P.O. Box 1450
Alexandria, VA 22313-1450
www.uspto.gov

DRINKER BIDDLE & REATH (DC)
1500 K STREET, N.W.
SUITE 1100
WASHINGTON, DC 20005-1209

COPY MAILED

OCT 2 4 2008

OFFICE OF PETITIONS

In re Application of Berglund et al. :
Application No. 10/519,711 : Decision on Petition
Filing Date: December 12, 2005 :
Attorney Docket No. 47113-0538 :

This is a decision on the petition under 37 CFR 1.181, filed July 9, 2008, to withdraw the holding of abandonment.

The petition is **granted.**

The Office mailed a non-final Office action on November 20, 2007. The Office action set a three-month shortened statutory period for reply.

A reply to the November 20, 2007, was not matched with the file. As a result, a Notice of Abandonment was mailed June 18, 2008.

Petitioner asserts a reply to the non-final Office action was timely filed on January 29, 2008. In support of the petition, petitioner has submitted a date-stamped postcard receipt, indicating the following items were received on January 29, 2008,

(1) Amendment transmittal sheet,
(2) Amendment,
(3) A copy of a priority document,
(4) A request for corrected filed receipt, and
(5) A copy of the filing receipt mailed by the Office on January 25, 2006.

The original reply filed January 29, 2008, was not matched with the file and cannot be located. However, M.P.E.P. 503 states, "[a] postcard receipt which itemizes and properly identifies the papers which are being filed serves as prima facie evidence of receipt in the PTO of all the items listed thereon on the date stamped thereon by the PTO." Accordingly, it is concluded that a reply was timely filed in the Patent and Trademark Office but not matched with the application file.

The Notice of Abandonment is hereby vacated and the holding of abandonment withdrawn.

Unfortunately, the copy of the request for a corrected filing receipt and the copy of the original filing receipt filed with the petition cannot be located. Therefore, the Office requests petitioner file a new copy of the request for a corrected filing receipt.

The petition requests assurance the improper holding of abandonment will not negatively affect the term of any patent issuing based on the application. Petitioner may wish to note, per 37 CFR 1.704(c)(4), the period of adjustment set forth in § 1.703 shall be reduced by the number of days, if any, beginning on the day after the date two months from the mailing date of a notice of abandonment and ending on the date a petition to withdraw the holding of abandonment or to revive the application is filed. In this case, the petition was filed within two months of the mailing date of the Notice of Abandonment. Therefore, absent a change in the law, a reduction in patent term pursuant to 37 CFR 1.704(c)(4) would be inappropriate. If petitioner disagrees with any patent term adjustment on the Notice of Allowance, a petition should be filed at that time.

Technology Center Art Unit 1793 will be informed of the instant decision and the application, including the papers filed July 9, 2008.

Telephone inquiries regarding this communication should be directed to Petitions Attorney Steven Brantley at (571) 272-3203.

Charles Steven Brantley
Senior Petitions Attorney
Office of Petitions

30 SEP 2005

UNITED STATES PATENT AND TRADEMARK OFFICE

Commissioner for Patents
United States Patent and Trademark Office
P.O. Box 1450
Alexandria, VA 22313-1450
www.uspto.gov

Morgan & Finnegan
3 World Financial Center
New York NY 10281

In re Application of BEN-OREN et al. Application No.: 10/519,723 PCT No.: PCT/IL03/00178 Int. Filing: 06 March 2003 Priority Date: 28 June 2002 Attorney Docket No.: 4350-4005 For: MANAGEMENT OF GASTRO-INTESTINAL DISORDERS	DECISION ON PETITION UNDER 37 CFR 1.181

This is a decision on applicants' "PETITION UNDER 37 CFR 1.181(A)(3)", requesting that the Notification of Missing Requirements dated 07 September 2005 be vacated. The petition was filed in the United States Patent and Trademark Office (USPTO) on 21 September 2005. No petition fee is required.

BACKGROUND

On 28 December 2004, applicants filed a Transmittal Letter to the United States Designated/Elected Office (DO/EO/US) Concerning a Filing Under 35 U.S.C. 371 (Form PTO 1390) along with, *inter alia*, the basic national fee.

On 26 July 2005, applicants filed a transmittal letter along with a Combined Declaration and Power of Attorney with a check for $130. These originally filed papers are located in the application file.

On 07 September 2005, a Notification of Missing Requirements (Form PCT/DO/EO/905) was mailed to applicants indicating that an oath or declaration, in compliance with 37 CFR 1.497(a) and (b), and the surcharge for filing the oath or declaration after the thirty month period was required.

On 21 September 2005, in response to the Notification of Missing Requirements, applicant filed the instant response with a copy of 26 July 2005 response, including, *inter alia*, a copy of the declaration and an itemized USPTO date-stamped postcard.

DISCUSSION

The papers originally filed on 26 July 2005 are located in the application file including an declaration, executed by the joint inventors in compliance with 37 CFR 1.497(a) and (b). A review of the finance records for 10/519,723 indicates that the $130 surcharge was paid.

The Notification of Missing Requirements mailed 07 September 2005 was sent in error and is hereby VACATED.

CONCLUSION

The request to withdraw the Notification of Missing Requirements is **GRANTED**.

For the reasons set forth above, the Notification of Missing Requirements mailed 07 September 2005 are hereby **VACATED**.

The application will be forward to the United States Designated/Elected Office for further processing. The 35 U.S.C. 371(c)(1), (c)(2) and (c)(4) date is **26 July 2005.**

Cynthia M. Kratz
Attorney Advisor
PCT Legal Office
Office of PCT Legal Administration

Telephone: (571) 272-3286
Facsimile: (571) 273-0459

#5

UNITED STATES PATENT AND TRADEMARK OFFICE

Commissioner for Patents
United States Patent and Trademark Office
P.O. Box 1450
Alexandria, VA 22313-1450
www.uspto.gov

11 JAN 2006

Frank Abramonte
Seed Intellectual Property Law Group
701 5th Avenue, Suite 6300
Seattle WA 98104-7092

In re Application of	:	
BENNETT et al.	:	
Application No.: 10/519,729	:	DECISION
PCT No.: PCT/NZ03/00136	:	
Int. Filing Date: 30 June 2003	:	
Priority Date: 28 June 2002	:	
Attorney Docket No.: 31036.401USPC	:	
For: UTILITY USAGE EVALUATION SYSTEM	:	
AND METHOD	:	

This is a decision on applicants' petition under 37 CFR 1.47(a) filed 27 October 2005 in the United States Patent and Trademark Office (USPTO).

BACKGROUND

On 30 June 2003, applicants filed international application PCT/NZ03/00136, which designated the United States and claimed a priority date of 28 June 2002. A copy of the international application was communicated from the International Bureau to the USPTO on 08 January 2004. The thirty-month period for paying the basic national fee in the United States expired at midnight on 28 December 2004.

On 28 December 2004, applicants filed a submission for entry into the national stage in the United States which was accompanied by, *inter alia*, the U.S. Basic National Fee, the surcharge under 37 CFR 1.492(e) for providing the oath or declaration later than thirty months from the priority date were required, and an assertion of small entity status.

On 27 June 2005, the United States Designated/Elected Office (DO/EO/US) mailed a NOTIFICATION OF MISSING REQUIREMENTS UNDER 35 U.S.C. 371 (Form PCT/DO/EO/905) indicating, *inter alia*, that an oath or declaration of the inventors in compliance with 37 CFR 1.497(a)-(b).

On 27 October 2005, applicants filed the instant petition under 37 CFR 1.47(a) which was accompanied by, *inter alia*, a petition/fee for a two-month extension of time, a declaration of inventors, a declaration of facts by Geoffrey William Bennett, a declaration of facts by Bruce Kerr, and a declaration of facts by Craig Morison.

DISCUSSION

A petition under 37 CFR 1.47(a) must be accompanied by: (1) the fee under 37 CFR 1.17(h); (2) factual proof that the missing joint inventor refuses to execute the application or cannot be reached after diligent effort; (3) a statement of the last known address of the missing inventor; and (4) an oath or declaration by each 37 CFR 1.47(a) applicant on his or her own behalf and on behalf of the non-signing joint inventor.

Items (1), (3), and (4) have been satisfied.

Item (2) has not been satisfied. The declarations of facts and the supporting exhibits have been considered. However, to establish a refusal to sign, it is required that the non-signing inventor be presented with the application papers (specification, including claims, drawings, and oath or declaration). See MPEP 409.03(d). While the declarations of facts indicate that the non-signing inventor was presented with a declaration of inventors, it is not clear that he was presented with the specification. "It is reasonable to require that the inventor be presented with the application papers before a petition under 37 CFR 1.47 is granted since such a procedure ensures that the inventor is apprised of the application to which the oath or declaration is directed. *In re Gray*, 115 USPQ 80 (Comm'r Pat. 1956)." MPEP 409.03(d). Additionally, there does not appear to have been an express refusal by Mr. Sheppard. When "it is concluded by the 37 CFR 1.47 applicant that a nonsigning inventor's conduct constitutes a refusal, all facts upon which that conclusion is based should be stated in the statement of facts in support of the petition or directly in the petition." MPEP § 409.03(c), Item II. Here, however, it is not clear what Mr. Sheppard's response was either time that he was presented with the declaration of inventors.

CONCLUSION

For the above reasons, applicants' petition under 37 CFR 1.47(a) is **DISMISSED**, without prejudice.

If reconsideration on the merits of this petition is desired, a proper response must be filed within TWO (2) MONTHS from the mail date of this decision. **Failure to timely file the proper response will result in abandonment of this application.** Any reconsideration request should include a cover letter entitled "Renewed Petition Under 37 CFR 1.47(a)". No additional petition fee is required. Extensions of time may be obtained under 37 CFR 1.136(a).

Please direct further correspondence with respect to this matter to Mail Stop PCT, Commissioner for Patents, Office of PCT Legal Administration, P.O. Box 1450, Alexandria, Virginia 22313-1450, with the contents of the letter marked to the attention of the Office of PCT Legal Administration.

Daniel Stemmer
Legal Examiner

PCT Legal Affairs
Office of Patent Cooperation Treaty
Legal Administration
Telephone: (571) 272-3301
Facsimile: (571) 273-0459

05 MAY 2006

UNITED STATES PATENT AND TRADEMARK OFFICE

Commissioner for Patents
United States Patent and Trademark Office
P.O. Box 1450
Alexandria, VA 22313-1450
www.uspto.gov

Frank Abramonte
Seed Intellectual Property Law Group
701 5th Avenue, Suite 6300
Seattle WA 98104-7092

In re Application of	:	
BENNETT et al.	:	
Application No.: 10/519,729	:	DECISION
PCT No.: PCT/NZ03/00136	:	
Int. Filing Date: 30 June 2003	:	
Priority Date: 28 June 2002	:	
Attorney Docket No.: 31036.401USPC	:	
For: UTILITY USAGE EVALUATION SYSTEM	:	
AND METHOD	:	

This is a decision on applicants' renewed petition under 37 CFR 1.47(a) filed 10 March 2006 in the United States Patent and Trademark Office (USPTO).

BACKGROUND

On 30 June 2003, applicants filed international application PCT/NZ03/00136, which designated the United States and claimed a priority date of 28 June 2002. A copy of the international application was communicated from the International Bureau to the USPTO on 08 January 2004. The thirty-month period for paying the basic national fee in the United States expired at midnight on 28 December 2004.

On 28 December 2004, applicants filed a submission for entry into the national stage in the United States which was accompanied by, *inter alia*, the U.S. Basic National Fee, the surcharge under 37 CFR 1.492(e) for providing the oath or declaration later than thirty months from the priority date were required, and an assertion of small entity status.

On 27 June 2005, the United States Designated/Elected Office (DO/EO/US) mailed a NOTIFICATION OF MISSING REQUIREMENTS UNDER 35 U.S.C. 371 (Form PCT/DO/EO/905) indicating, *inter alia*, that an oath or declaration of the inventors in compliance with 37 CFR 1.497(a)-(b).

On 27 October 2005, applicants filed a petition under 37 CFR 1.47(a) which was accompanied by, *inter alia*, a petition/fee for a two-month extension of time, a declaration of inventors, a declaration of facts by Geoffrey William Bennett, a declaration of facts by Bruce Kerr, and a declaration of facts by Craig Morison.

On 11 January 2006, a decision was mailed dismissing applicants' petition under 37 CFR 1.47(a) without prejudice for failing to provide factual proof that the missing joint inventor refuses to execute the application or cannot be reached after diligent effort.

On 10 March 2006, applicants submitted the instant renewed petition under 37 CFR 1.47(a) which was accompanied by a declaration of inventors signed by all the joint inventors.

DISCUSSION

Since a 37 CFR 1.497 declaration has been executed by all the joint inventors, the petition for status under 37 CFR 1.47(a) is moot. The application need not be returned to the Office of PCT Legal Affairs for any further consideration of the status under 37 CFR 1.47 and no such status should be indicated on this application file.

The declaration of inventors filed 10 March 2006 is in compliance with 37 CFR 1.497(a)-(b).

CONCLUSION

For the above reasons, applicants' petition under 37 CFR 1.47(a) is **DISMISSED** as **MOOT**.

This application is being forwarded to the National Stage Processing Branch of the Office of PCT Operations to continue national stage processing of the application.

Daniel Stemmer
Legal Examiner
PCT Legal Affairs
Office of Patent Cooperation Treaty
Legal Administration
Telephone: (571) 272-3301
Facsimile: (571) 273-0459

UNITED STATES PATENT AND TRADEMARK OFFICE

Commissioner for Patents
United States Patent and Trademark Office
P.O. Box 1450
Alexandria, VA 22313-1450
www.uspto.gov

COPY MAILED

JAN 08 2007

OFFICE OF PETITIONS

SUGHRUE MION
2100 PENNSYLVANIA AVE. NW
WASHINGTON DC 20037-3213

In re Application of	:	
Shunzou Ohshima	:	
Application No. 10/519,745	:	ON PETITION
Filed: December 29, 2004	:	
Attorney Docket No. Q85443	:	

This is a decision on the petition, filed January 5, 2007, under 37 CFR 1.313(c)(2) to withdraw the above-identified application from issue after payment of the issue fee.

The petition is **GRANTED.**

The above-identified application is withdrawn from issue for consideration of a submission under 37 CFR 1.114 (request for continued examination). See 37 CFR 1.313(c)(2).

Petitioner is advised that the issue fee paid on December 14, 2006 in the above-identified application cannot be refunded. If, however, the above-identified application is again allowed, petitioner may request that it be applied towards the issue fee required by the new Notice of Allowance.[1]

Telephone inquiries should be directed to the undersigned at (571) 272-3208.

The examiner of Technology Center AU 2836 will consider the request for continued examination under 37 CFR 1.114.

Karen Creasy
Petitions Examiner
Office of Petitions

---

[1] The request to apply the issue fee to the new Notice may be satisfied by completing and returning the new Issue Fee Transmittal Form PTOL-85(b), which includes the following language thereon: "Commissioner for Patents is requested to apply the Issue Fee and Publication Fee (if any) or re-apply any previously paid issue fee to the application identified above." Petitioner is advised that, whether a fee is indicated as being due or not, the Issue Fee Transmittal Form **must** be completed and timely submitted to avoid abandonment. Note the language in bold text on the first page of the Notice of Allowance and Fee(s) Due (PTOL-85).

#6

UNITED STATES PATENT AND TRADEMARK OFFICE

COMMISSIONER FOR PATENTS
UNITED STATES PATENT AND TRADEMARK OFFICE
P.O. BOX 1450
ALEXANDRIA, VA 22313-1450
www.uspto.gov

8 FEB 2006

OSHA LIANG L.L.P.
1221 MCKINNEY STREET
SUITE 2800
HOUSTON, TX 77010

In re Application of VILLERS U.S. Application No.: 10/519,758 PCT Application No.: PCT/FR03/02080 Int. Filing Date: 04 July 2003 Priority Date Claimed: 08 July 2002 Attorney Docket No.: 11345/118001 For: UNIT AND METHOD FOR MANAGING THE DISPLAY OF A CURRENT PORTION OF A DOCUMENT ON A SCREEN	:	DECISION

This is in response to applicant's "Petition Under 37 CFR § 1.47(b)" filed 23 January 2006.

BACKGROUND

On 04 July 2003, applicant filed international application PCT/FR03/02080, which claimed priority of an earlier France application filed 08 July 2002. A copy of the international application was communicated to the USPTO from the International Bureau on 22 January 2004. The thirty-month period for paying the basic national fee in the United States expired on 08 January 2005.

On 30 December 2004, applicant filed national stage papers in the United States Designated/Elected Office (DO/EO/US). The submission was accompanied by, *inter alia*, the basic national fee required by 35 U.S.C. 371(c)(1).

On 30 June 2005, the DO/EO/US mailed a Notification of Missing Requirements Under 35 U.S.C. 371 (Form PCT/DO/EO/905), which indicated that an oath or declaration in compliance with 37 CFR 1.497 must be filed.

On 23 January 2006, applicant filed the present petition under 37 CFR 1.47(b).

DISCUSSION

A petition under 37 CFR 1.47(b) must be accompanied by: (1) the fee under 37 CFR 1.17(i), (2) factual proof that the inventor refuses to execute the application or cannot be reached after diligent effort, (3) a statement of the last known address of the inventor, (4) an oath or declaration by the 37 CFR 1.47(b) applicant on behalf of and as agent for the non-signing inventor, (5) proof that the 37 CFR 1.47(b) applicant has sufficient proprietary interest in the application, and (6) a showing that such action is necessary to preserve the rights of the parties or to prevent irreparable damage. See 37 CFR 1.47(b).

With regard to item (1) above, the requisite $200.00 petition fee will be charged to Deposit Account No. 50-0591 as authorized in the petition.

With regard to item (2) above, MPEP 409.03(d) states in relevant part,

> Where inability to find or reach a nonsigning inventor "after diligent effort" is the reason for filing under 37 CFR 1.47, an affidavit or declaration of facts should be submitted which fully describes the exact facts which are relied on to establish that a diligent effort was made. . . . The affidavit or declaration of facts must be signed, where at all possible, by a person having firsthand knowledge of the facts recited therein. Statements based on hearsay will not normally be accepted. Copies of documentary evidence such as certified mail return receipt, cover letter of instructions, telegrams, etc., that support a finding that the nonsigning inventor could not be found or reached should be made part of the affidavit or declaration. It is important that the affidavit or declaration contain statements of fact as opposed to conclusions.

The petition states that the sole inventor Jean-Stephane Villers cannot be found after diligent effort. Petitioner has submitted evidence of two letters sent to Villers' last known address (see affidavit of Isabelle Thibaudeau). However, Ms. Thibaudeau's affidavit is improper because the two submitted pages are clearly a composite document, wherein the second page was transmitted by facsimile. The submission of a composite document is not acceptable because it raises doubt as to whether the first page was associated with the second page at the time of execution. Furthermore, the purported delivery receipts and returned envelope will not be considered until English translations have been provided. In addition, the petition fails to provide evidence of additional methods of attempting to reach Villers, such as the following: telephone, electronic mail, searching telephone/Internet directories, and contacting Villers' former employer and/or co-workers. Thus, it would not be reasonable to conclude at the present time that Villers cannot be found.

With regard to item (3) above, the petition states the last known address of the nonsigning inventor.

With regard to item (4) above, an oath or declaration executed by the 37 CFR 1.47(b) applicant on behalf of and as agent for the nonsigning inventor has not been provided. Applicant is advised that when an assignee files an application under 37 CFR 1.47(b), ownership of the

application must be established. See MPEP 324. Under 37 CFR 3.73(b)(1), ownership of the application may be established by: (i) submitting documentary evidence of a chain of title from the original owner to the assignee; or (ii) specifying by reel and frame number where such evidence is recorded in the USPTO.

With regard to item (5) above, the 37 CFR 1.47(b) applicant must prove that, as of the date the application was deposited in the Patent and Trademark Office, (A) the invention has been assigned to the applicant, or (B) the inventor has agreed in writing to assign the invention to the applicant, or (C) the applicant otherwise has sufficient proprietary interest in the subject matter to justify filing of the application. MPEP 409.03(f).

In the present case, petitioner has not made a showing regarding proprietary interest in the application.

With regard to item (6) above, petitioner has not made a showing regarding the preservation of rights of the parties or the prevention of irreparable damage.

CONCLUSION

For the reasons above, the petition under 37 CFR 1.47(b) is DISMISSED without prejudice.

If reconsideration on the merits of this petition is desired, a proper response must be filed within TWO (2) MONTHS from the mail date of this decision. Failure to timely file a proper response will result in abandonment of the application. Any reconsideration request should include a cover letter entitled "Renewed Petition Under 37 CFR 1.47(b)." No additional petition fee is required.

Please direct further correspondence with respect to this matter to Mail Stop PCT, Commissioner for Patents, Office of PCT Legal Administration, P.O. Box 1450, Alexandria, Virginia 22313-1450, with the contents of the letter marked to the attention of the Office of PCT Legal Administration.

Bryan Tung
PCT Legal Examiner
PCT Legal Office

Telephone: 571-272-3303
Facsimile: 571-273-0459

UNITED STATES PATENT AND TRADEMARK OFFICE

COMMISSIONER FOR PATENTS
UNITED STATES PATENT AND TRADEMARK OFFICE
P.O. BOX 1450
ALEXANDRIA, VA 22313-1450
www.uspto.gov

FISH & RICHARDSON, PC
P.O. BOX 1022
MINNEAPOLIS MN 55440-1022

COPY MAILED
DEC 18 2007
OFFICE OF PETITIONS

Applicant: Villers
Appl. No.: 10/519,758
International Filing Date: July 4, 2003
Title: UNIT AND METHOD FOR MANAGING THE DISPLAY OF A CURRENT PORTION OF A DOCUMENT ON A SCREEN
Attorney Docket No.: 11345/118001
Pub. No.: 2006/0230084 A1
Pub. Date: October 12, 2006

This is a decision on the request for corrected of patent application publication under 37 CFR 1.221(b), received on December 12, 2006, for the above-identified application.

The request is granted.

The corrected patent application publication will be published in due course, unless the patent issues before the application is republished.

It would greatly benefit the Office if **applicant did not provide copies of papers**, which were previously submitted, and/or **complete copies of the pre-grant publication**, as it unnecessarily increases the cost to the Office. See 37 CFR 1.4(b). A request for corrected publication need only point out what was printed incorrectly in the application, where the error occurs in the publication and where the correct text or drawing is found in the application papers. Marked up relevant copies of the applications papers and the pre-grant publication may facilitate processing of the request, where it is not readily apparent where the error occurs. If it is not clear why the error is a material error, further explanation may be warranted

Inquiries relating to this matter may be directed to Mark O. Polutta at (703) 272-7709.

Mark O. Polutta
Senior Legal Advisor
Office of Patent Legal Administration
Office of the Deputy Commissioner
for Patent Examination Policy

UNITED STATES PATENT AND TRADEMARK OFFICE

Commissioner for Patents
United States Patent and Trademark Office
P.O. Box 1450
Alexandria, VA 22313-1450
www.uspto.gov

GLENN PATENT GROUP
3475 EDISON WAY, SUITE L
MENLO PARK, CA 94025

COPY MAILED

AUG 1 2 2008

OFFICE OF PETITIONS

In re Application of	:	
TOOMEY, et al.	:	
Application No. 10/519,774	:	DECISION ON PETITION
Filed: December 22, 2004	:	TO WITHDRAW
Attorney Docket No. A0L0056	:	FROM RECORD
	:	

This is a decision on the Request to Withdraw as attorney or agent of record under 37 C.F.R. § 1.36(b), filed May 9, 2008.

The request is DISMISSED as moot.

A review of the file record indicates that the power of attorney to GLENN PATENT GROUP has been revoked by the assignee of the patent application on August 1, 2008. Accordingly, the request to withdraw under 37 C.F.R. § 1.36(b) is moot.

All future communications from the Office will continue to be directed to the below-listed address until otherwise notified by applicant.

Telephone inquires concerning this decision should be directed to the undersigned at 571-272- 7253.

Monica A. Graves
Petitions Examiner
Office of Petitions

cc: KNOBBE MARTENS OLSON & BEAR, LLP
2040 MAIN STREET, FOURTEENTH FLOOR
IRVINE, CA 92614

#7

UNITED STATES PATENT AND TRADEMARK OFFICE

Commissioner for Patents
United States Patent and Trademark Office
P.O. Box 1450
Alexandria, VA 22313-1450
www.uspto.gov

19 JUL 2006

Paul J. Sutton
Greenberg Traurig, LLP
200 Park Avenue
New York, New York 10166

In re Application of SOUZA et al. Application No.: 10/519,782 PCT No.: PCT/US03/20633 Int. Filing: 01 July 2003 Priority Date: 02 July 2002 Attorney Docket No.: 2003CIPPCT For: NIGHTLIGHT, LED POWER SUPPLY CIRCUIT, AND COMBINATION THEREOF	:	DECISION ON PETITION UNDER 37 CFR 1.47(a)

This decision is in response to applicants' "Petition under 37 CFR 1.47(a)" filed 06 February 2006 to accept the application without the signature of joint inventors, Michael Souza and John Ferreira. The $200 petition fee has been submitted.

BACKGROUND

On 01 July 2003, applicants filed international application PCT/US03/20633, which claimed a priority date 02 July 2002. Pursuant to 37 CFR 1.495, the period for paying the basic national fee in the United States expired 30 months from the priority date, 02 January 2005.

On 29 December 2004, applicants filed a transmittal for entry into the national stage in the United States, which accompanied by the requisite basic national fee as required by 35 U.S.C. 371(c)(1) and a copy of the international application.

On 06 February 2006, applicants filed a petition under 37 CFR 1.47(a).

DISCUSSION

A petition under 37 CFR 1.47(a) must be accompanied by (1) the fee under 37 CFR 1.17(h), (2) factual proof that the missing joint inventor refuses to execute the application or cannot be reached after diligent effort, (3) a statement of the last known address of the missing inventor, and (4) an oath or declaration by each 37 CFR 1.47(a) applicant on his or her own behalf and behalf of the non-signing joint inventor.

A complete review of the papers filed 06 February 2006 reveals that petitioner has paid the requisite petition fee, provided sufficient proof that the non-signing inventors (Michael Souza and John Ferreira) refused to sign, stated the last known address of the

non-signing inventors (Michael Souza and John Ferreira), and provided an acceptable declaration. Accordingly, all of the requirements of items (1), (2), (3), and (4) above have been satisfied.

CONCLUSION

For the reasons above, applicants' petition under 37 CFR 1.47(a) is **GRANTED**.

The application has an international filing date of 01 July 2003 under 35 U.S.C. 363, and will be given a date of 06 February 2006 under 35 U.S.C. 371(c)(1), (c)(2) and (c)(4).

As provided in 37 CFR 1.47(a), a notice of the filing of this application will be forwarded to the non-signing inventor at his last known address of record.

A notice of the filing of the application under 37 CFR 1.47(a) will be published in the Official Gazette.

Anthony Smith
Attorney-Advisor
Office PCT Legal Administration
Tel.: 571-272-3298
Facsimile: 571-273-0459

UNITED STATES PATENT AND TRADEMARK OFFICE

Commissioner for Patents
United States Patent and Trademark Office
P.O. Box 1450
Alexandria, VA 22313-1450
www.uspto.gov

19 JUL 2006

John Ferreira
332 State Avenue
Fall River, MA 02724

In re Application of
SOUZA et al.
Application No.: 10/519,782
PCT No.: PCT/US03/20633
Int. Filing: 01 July 2003
Priority Date: 02 July 2002
Attorney Docket No.: 2003CIPPCT
For: NIGHTLIGHT, LED POWER SUPPLY CIRCUIT, AND COMBINATION THEREOF

Dear John Ferreira:

You are named as an inventor in the above identified United States patent application, filed under the provisions of 37 CFR 1.47(a) and 35 U.S.C. 116. Should a patent be granted, you will be designated as an inventor.

As a named inventor, you are entitled to inspect any paper in the file wrapper of the application, order copies of all or any part thereof (at a prepaid cost per 37 CFR 1.19) or to make your position of record in the application. Alternatively, you may arrange to do any of the preceding through a registered patent agent or attorney presenting written authorization from you. If you care to join in the application, counsel of record (see below) would presumably assist you. Joining in the application would entail the filing of an appropriate oath or declaration by you pursuant to 37 CFR 1.63.

Anthony Smith

Anthony Smith
Attorney-Advisor
Office of PCT Legal Administration
Telephone: (571) 272-3298
Facsimile: (571) 273-0459

Counsel of Record:
Paul J. Sutton
Greenberg Traurig, LLP
200 Park Avenue
New York, New York 10166

08 SEP 2006

UNITED STATES PATENT AND TRADEMARK OFFICE

Commissioner for Patents
United States Patent and Trademark Office
P.O. Box 1450
Alexandria, VA 22313-1450
www.uspto.gov

Paul J. Sutton
Greenberg Traurig, LLP
200 Park Avenue
New York, New York 10166

In re Application of :
SOUZA et al. :
Application No.: 10/519,782 :
PCT No.: PCT/US03/20633 : DECISION ON PETITION
Int. Filing: 01 July 2003 :
Priority Date: 02 July 2002 :
Attorney Docket No.: 2003CIPPCT :
For: NIGHTLIGHT, LED POWER SUPPLY CIRCUIT, AND COMBINATION THEREOF

This is a decision on the petition under 37 CFR 1.78(a)(3) filed 21 February 2006 to accept an unintentionally delayed claim under 35 U.S.C. § 120 and 365(c) for the benefit of priority to the prior-filed nonprovisional applications set forth in the amendment filed concurrently with the instant petition.

The petition is **GRANTED**.

The present nonprovisional application was filed after November 29, 2000, and the claim herein for the benefit of priority to the prior-filed applications is submitted after expiration of the period specified in 37 CFR 1.78(a)(2)(ii). Therefore, this is a proper petition under 37 CFR 1.78(a)(3).

A petition for acceptance of a claim for late priority under 37 CFR 1.78(a)(3) is only applicable to those applications filed on or after November 29, 2000. Further, the petition is appropriate only after the expiration of the period specified in 37 CFR 1.78(a)(2)(ii). In addition, the petition under 37 CFR 1.78(a)(3) must be accompanied by:

(1) the reference required by 35 U.S.C. § 120 and 37 CFR 1.78(a)(2)(i) of the prior-filed application, unless previously submitted;
(2) the surcharge set forth in § 1.17(t); and
(3) a statement that the entire delay between the date the claim was due under 37 CFR 1.78(a)(2)(ii) and the date the claim was filed was unintentional. The Director may require additional information where there is a question whether the delay was unintentional.

The petition complies with the requirements for a grantable petition under 37 CFR 1.78(a)(3) in that (1) a reference to the prior-filed nonprovisional applications has been included in an amendment to the first sentence of the specification following the title, as provided by 37 CFR 1.78(a)(2)(iii); (2) the surcharge fee required by 37 CFR 1.17(t) has been submitted; and (3) the petition contains a proper statement of unintentional delay. Accordingly, having found that the instant petition for acceptance of an unintentionally delayed claim for the benefit of priority under 35 U.S.C. § 120 to the prior-filed nonprovisional application satisfies the conditions of 37 CFR 1.78(a)(3), the petition is granted.

The granting of the petition to accept the delayed benefit claim to the prior-filed applications under 37 CFR 1.78(a)(3) should not be construed as meaning that this application is entitled to the benefit of the prior-filed applications. In order for this application to be entitled to the benefit of the prior-filed applications, all other requirements under 35 U.S.C. § 120 and 37 CFR 1.78(a)(1) and (a)(2) must be met. Accordingly, the examiner will, in due course, consider this benefit claim and determine whether this application is entitled to the benefit of the earlier filing date.

Any inquiries concerning this decision may be directed to Anthony Smith, Attorney Advisor, at (571) 272-3298. All other inquiries concerning either the examination procedures or status of the application should be directed to the Technology Center.

This application is being returned to the United States Designated/Elected Office (DO/EO/US) for treatment in accordance with this decision, that is, for mailing of a Notification of Acceptance of Application (Form PCT/DO/EO/903) which identifies a date of 06 February 2006 under 35 U.S.C. 371(c) and preparation and mailing of a Filing Receipt in accordance with this decision, that is a filing receipt that identifies the instant application as a continuation-in-part of US application no. 10/188,533.

Boris Milef
Legal Examiner
Office of Petitions and PCT Legal Administration

UNITED STATES PATENT AND TRADEMARK OFFICE

Commissioner for Patents
United States Patent and Trademark Office
P.O. Box 1450
Alexandria, VA 22313-1450
www.uspto.gov

DARBY & DARBY P.C.
P. O. BOX 5257
NEW YORK NY 10150-5257

COPY MAILED

DEC 19 2006

OFFICE OF PETITIONS

In re Application of	:	
Hidemitsu Takaoka et al.	:	
Application No. 10/519,794	:	DECISION GRANTING PETITION
Filed: December 22, 2004	:	UNDER 37 CFR 1.313(c)(2)
Attorney Docket No. 09852/020258-US0	:	

This is a decision on the petition under 37 CFR 1.313(c)(2), filed December 12, 2006, to withdraw the above-identified application from issue after payment of the issue fee.

The petition is **GRANTED**.

The above-identified application is withdrawn from issue for consideration of a submission under 37 CFR 1.114 (request for continued examination). *See* 37 CFR 1.313(c)(2).

Petitioner is advised that the issue fee paid on December 8, 2006 cannot be refunded. If, however, this application is again allowed, petitioner may request that it be applied towards the issue fee required by the new Notice of Allowance.[1]

Telephone inquiries should be directed to Terri Williams at (571) 272-2991.

This application is being referred to Technology Center AU 1775 for processing of the request for continued examination under 37 CFR 1.114 and for consideration of the concurrently filed Information Disclosure Statement.

Frances Hicks
Petitions Examiner
Office of Petitions

---

[1] *The request to apply the issue fee to the new Notice may be satisfied by completing and returning the new Part B – Fee(s) Transmittal Form (along with any balance due at the time of submission). Petitioner is advised that the Issue Fee Transmittal Form must be completed and timely submitted to avoid abandonment of the application.*

UNITED STATES PATENT AND TRADEMARK OFFICE

Commissioner for Patents
United States Patent and Trademark Office
P.O. Box 1450
Alexandria, VA 22313-1450
www.uspto.gov

BANNER & WITCOFF, LTD.
1100 13th STREET, N.W.
SUITE 1200
WASHINGTON DC 20005-4051

COPY MAILED

DEC 17 2008

In re Application of St. Croix, et al. Application No. 10/519,805 Filed: December 29, 2004 Attorney Docket No. 001107.00527	: : : : :	DECISION DISMISSING PETITIONS UNDER 37 CFR 1.78(a)(3) AND (a)(6)

This is a decision on the petition under 37 CFR §§ 1.78(a)(3) and 1.78(a)(6), filed , to accept an unintentionally delayed claim under 35 U.S.C. §§ 120 and 119(e) for the benefit of priority to the prior-filed nonprovisional and provisional applications set forth in the concurrently filed ADS.

The petition is **DISMISSED**

A petition for acceptance of a claim for late priority under 37 CFR §§ 1.78(a)(3) and 1.78(a)(6) is only applicable to those applications filed on or after November 29, 2000 and after the expiration of the period specified in 37 CFR §§ 1.78(a)(2)(ii) and 1.78(a)(5)(ii). In addition, the petition under 37 CFR §§ 1.78(a)(3) and 1.78(a)(6) must be accompanied by:

(1) the reference required by 35 U.S.C. §§ 120 and 119(e) and 37 CFR §§ 1.78(a)(2)(i) and 1.78(a)(5)(i) of the prior-filed application, unless previously submitted;

(2) the surcharge set forth in § 1.17(t); and

(3) a statement that the entire delay between the date the claim was due under 37 CFR §§ 1.78(a)(2)(ii) and 1.78(a)(5)(ii) and the date the claim was filed was unintentional. The Director may require additional where there is a question whether the delay was unintentional.

The petition does not comply with item (1).

37 CFR 1.78(a)(2)(i) requires that any nonprovisional application claiming the benefit of one or more prior-filed copending nonprovisional applications must contain or be amended to contain a reference to each such prior-filed application, identifying it by application number (consisting of the series code and serial number) and indicating the relationship of the applications. The

relationship between the applications is whether the subject application is a continuation, divisional, or continuation-in-part of a prior-filed nonprovisional application. An example of a proper benefit claim is: "This application is a continuation of Application No. 10/---, filed---." A benefit claim that merely states: "This application claims the benefit of Application No. 10/---, filed---," does not comply with 37 CFR 1.78(a)(2)(i) since the proper relationship, which includes the type of continuing application, is not stated. The supplemental ADS filed with the present petition fails to comply with the provisions of 37 CFR 1.78(a)(2)(i) and is therefore unacceptable. There is no continuity type listed between "This Application" and Application No. " 09/918,715."

Before the petition under 37 CFR §§ 1.78(a)(3) and 1.78(a)(6) can be granted, a renewed petition and either an Application Data Sheet or a substitute amendment (complying with the provisions of 37 CFR 1.121 and 37 CFR 1.76(b)(5)) to correct the above matter is required.

Also, 37 CFR §§ 1.78(a)(3) and 1.78(a)(6) require a statement that the entire delay between the date the claim was due under 37 CFR §§ 1.78(a)(2)(ii) and 1.78(a)(5)(ii) and the date the claim was filed was unintentional. Since the statement appearing in the petition varies from the required language, the statement is being construed as the statement required by 37 CFR §§1.78(a)(3) and 1.78(a))(6). If this is not a correct reading of the statement appearing in the petition, petitioner should promptly notify the Office.

Further correspondence with respect to this matter should be addressed as follows:

By mail: Mail Stop PETITIONS
Commissioner for Patents
Post Office Box 1450
Alexandria, VA 22313-1450

By hand: Customer Service Window
Mail Stop Petitions
Randolph Building
401 Dulany Street
Alexandria, VA 22314

By fax: (571) 273-8300
ATTN: Office of Petitions

Any questions concerning this matter may be directed to the undersigned at (571) 272-3230.

Shirene Willis Brantley

Shirene Willis Brantley
Senior Petitions Attorney
Office of Petitions

UNITED STATES PATENT AND TRADEMARK OFFICE

Commissioner for Patents
United States Patent and Trademark Office
P.O. Box 1450
Alexandria, VA 22313-1450
www.uspto.gov

BANNER & WITCOFF, LTD.
1100 13th STREET, N.W.
SUITE 1200
WASHINGTON DC 20005-4051

COPY MAILED

MAY 01 2009

OFFICE OF PETITIONS

In re Application of St. Croix, et al. Application No. 10/519,805 Filed: December 29, 2004 Attorney Docket No. 001107.00527	: : : : :	DECISION DISMISSING PETITIONS UNDER 37 CFR 1.78(a)(3) AND (a)(6)

This is a decision on the renewed petition under 37 CFR §§ 1.78(a)(3) and 1.78(a)(6), filed March 3, 2009, to accept an unintentionally delayed claim under 35 U.S.C. §§ 120 and 119(e) for the benefit of priority to the prior-filed nonprovisional and provisional applications set forth in the concurrently filed supplemental ADS.

The petition is **DISMISSED**

A petition for acceptance of a claim for late priority under 37 CFR §§ 1.78(a)(3) and 1.78(a)(6) is only applicable to those applications filed on or after November 29, 2000 and after the expiration of the period specified in 37 CFR §§ 1.78(a)(2)(ii) and 1.78(a)(5)(ii). In addition, the petition under 37 CFR §§ 1.78(a)(3) and 1.78(a)(6) must be accompanied by:

(1) the reference required by 35 U.S.C. §§ 120 and 119(e) and 37 CFR §§ 1.78(a)(2)(i) and 1.78(a)(5)(i) of the prior-filed application, unless previously submitted;
(2) the surcharge set forth in § 1.17(t); and
(3) a statement that the entire delay between the date the claim was due under 37 CFR §§ 1.78(a)(2)(ii) and 1.78(a)(5)(ii) and the date the claim was filed was unintentional. The Director may require additional where there is a question whether the delay was unintentional.

The petition does not comply with item (1).

A review of the Domestic Priority Information Part I in the supplemental ADS reveals that there is a typographical error that must be corrected. Application No. 09/918,715 does not claim

benefit of Application No. 60/2**28**,850. Application No. 09/918,715 claims benefit of Application No. 60/2**82**,850. (emphasis added)

Before the renewed petition under 37 CFR §§ 1.78(a)(3) and 1.78(a)(6) can be granted, a renewed petition and either an Application Data Sheet or a substitute amendment (complying with the provisions of 37 CFR 1.121 and 37 CFR 1.76(b)(5)) to correct the above matter is required.

Further correspondence with respect to this matter should be addressed as follows:

By mail: Mail Stop PETITIONS
Commissioner for Patents
Post Office Box 1450
Alexandria, VA 22313-1450

By hand: Customer Service Window
Mail Stop Petitions
Randolph Building
401 Dulany Street
Alexandria, VA 22314

By fax: (571) 273-8300
ATTN: Office of Petitions

Any questions concerning this matter may be directed to the undersigned at (571) 272-3230.

Shirene Willis Brantley

Shirene Willis Brantley
Senior Petitions Attorney
Office of Petitions

UNITED STATES PATENT AND TRADEMARK OFFICE

Commissioner for Patents
United States Patent and Trademark Office
P.O. Box 1450
Alexandria, VA 22313-1450
www.uspto.gov

BANNER & WITCOFF, LTD.
1100 13th STREET, N.W.
SUITE 1200
WASHINGTON DC 20005-4051

MAILED

JUN 0 2 2009

OFFICE OF PETITIONS

In re Application of St. Croix, et al. Application No. 10/519,805 Filed: December 29, 2004 Attorney Docket No. 001107.00527	: : : : :	DECISION GRANTING PETITIONS UNDER 37 CFR 1.78(a)(3) AND (a)(6)

This is a decision on the second renewed petition under 37 CFR §§ 1.78(a)(3) and 1.78(a)(6), filed May 13, 2009, to accept an unintentionally delayed claim under 35 U.S.C. §§ 120 and 119(e) for the benefit of priority to the prior-filed nonprovisional and provisional applications set forth in the concurrently filed supplemental ADS.

The petition is **GRANTED**

A petition for acceptance of a claim for late priority under 37 CFR §§ 1.78(a)(3) and 1.78(a)(6) is only applicable to those applications filed on or after November 29, 2000 and after the expiration of the period specified in 37 CFR §§ 1.78(a)(2)(ii) and 1.78(a)(5)(ii). In addition, the petition under 37 CFR §§ 1.78(a)(3) and 1.78(a)(6) must be accompanied by:

(1) the reference required by 35 U.S.C. §§ 120 and 119(e) and 37 CFR §§ 1.78(a)(2)(i) and 1.78(a)(5)(i) of the prior-filed application, unless previously submitted;

(2) the surcharge set forth in § 1.17(t); and

(3) a statement that the entire delay between the date the claim was due under 37 CFR §§ 1.78(a)(2)(ii) and 1.78(a)(5)(ii) and the date the claim was filed was unintentional. The Director may require additional where there is a question whether the delay was unintentional.

Additionally, the instant nonprovisional application must be pending at the time of filing of the reference to the prior-filed provisional applications, as required by 37 CFR 1.78(a)(5)(ii). Further, a nonprovisional application claiming the benefit of the prior-filed provisional applications must have been filed within twelve months of the filing date of the prior-filed provisional applications.

All the above requirements having been satisfied, the late claim for benefit of priority under 35 U.S.C. §§ 120 and 119(e) is accepted as being unintentionally delayed.

The granting of the petition to accept the delayed benefit claim to the prior-filed applications under 37 CFR §§ 1.78(a)(3) and 1.78(a)(6) should not be construed as meaning that this application is entitled to the benefit of the filing date of the prior-filed applications. In order for this application to be entitled to the benefit of the prior-filed applications, all other requirements under 35 U.S.C. §§120 and 1.78(a)(1) and (a)(2) and under 35 U.S.C. §119(e) and 37 CFR 1.78(a)(4) and (a)(5) must be met. Similarly, the fact that the corrected Filing Receipt accompanying this decision on petition includes the prior-filed applications should not be construed as meaning that applicant is entitled to the claim for benefit of priority to the prior-filed applications noted thereon. Accordingly, the examiner will, in due course, consider this benefit claim and determine whether the application is entitled to the benefit of the earlier filing date.

A corrected Filing Receipt, which includes the priority claim to the prior-filed applications, accompanies this decision on petition.

Any questions concerning this matter may be directed to the undersigned at (571) 272-3230. All other inquiries concerning either the examination procedures or status of the application should be directed to the Technology Center.

This application is being forwarded to Technology Center Art Unit 1643 for consideration by the examiner of the claim under 35 U.S.C. § §120 and 119(e) of the prior-filed nonprovisional and provisional applications.

Shirene Willis Brantley

Shirene Willis Brantley
Senior Petitions Attorney
Office of Petitions

ATTACHMENT : Corrected Filing Receipt

UNITED STATES PATENT AND TRADEMARK OFFICE

UNITED STATES DEPARTMENT OF COMMERCE
United States Patent and Trademark Office
Address: COMMISSIONER FOR PATENTS
P.O. Box 1450
Alexandria, Virginia 22313-1450
www.uspto.gov

APPLICATION NUMBER	FILING or 371(c) DATE	GRP ART UNIT	FIL FEE REC'D	ATTY.DOCKET.NO	TOT CLAIMS	IND CLAIMS
10/519,805	12/13/2005	1643	3380	001107.00527	25	13

CONFIRMATION NO. 7620

CORRECTED FILING RECEIPT

22907
BANNER & WITCOFF, LTD.
1100 13th STREET, N.W.
SUITE 1200
WASHINGTON, DC 20005-4051

OC000000036235229

Date Mailed: 06/01/2009

Receipt is acknowledged of this non-provisional patent application. The application will be taken up for examination in due course. Applicant will be notified as to the results of the examination. Any correspondence concerning the application must include the following identification information: the U.S. APPLICATION NUMBER, FILING DATE, NAME OF APPLICANT, and TITLE OF INVENTION. Fees transmitted by check or draft are subject to collection. Please verify the accuracy of the data presented on this receipt. **If an error is noted on this Filing Receipt, please submit a written request for a Filing Receipt Correction. Please provide a copy of this Filing Receipt with the changes noted thereon. If you received a "Notice to File Missing Parts" for this application, please submit any corrections to this Filing Receipt with your reply to the Notice. When the USPTO processes the reply to the Notice, the USPTO will generate another Filing Receipt incorporating the requested corrections**

Applicant(s)

Brad St. Croix, Frederick, MD;
Kenneth W. Kinzler, Bel Air, MD;
Bert Vogelstein, Baltimore, MD;

Power of Attorney: The patent practitioners associated with Customer Number 22907

Domestic Priority data as claimed by applicant

This application is a 371 of PCT/US03/16250 07/02/2003
which claims benefit of 60/393,023 07/02/2002
and claims benefit of 60/458,964 04/01/2003
This application 10/519,805
is a CIP of 09/918,715 08/01/2001 PAT 7,402,660
which claims benefit of 60/222,599 08/02/2000
and claims benefit of 60/224,360 08/11/2000
and claims benefit of 60/282,850 04/11/2001

Foreign Applications

If Required, Foreign Filing License Granted: 01/30/2007

The country code and number of your priority application, to be used for filing abroad under the Paris Convention, is **US 10/519,805**

Projected Publication Date: Not Applicable

Non-Publication Request: No

Early Publication Request: No

Title

Secreted and cytoplasmic tumor endothelial markers

Preliminary Class

435

PROTECTING YOUR INVENTION OUTSIDE THE UNITED STATES

Since the rights granted by a U.S. patent extend only throughout the territory of the United States and have no effect in a foreign country, an inventor who wishes patent protection in another country must apply for a patent in a specific country or in regional patent offices. Applicants may wish to consider the filing of an international application under the Patent Cooperation Treaty (PCT). An international (PCT) application generally has the same effect as a regular national patent application in each PCT-member country. The PCT process **simplifies** the filing of patent applications on the same invention in member countries, but **does not result** in a grant of "an international patent" and does not eliminate the need of applicants to file additional documents and fees in countries where patent protection is desired.

Almost every country has its own patent law, and a person desiring a patent in a particular country must make an application for patent in that country in accordance with its particular laws. Since the laws of many countries differ in various respects from the patent law of the United States, applicants are advised to seek guidance from specific foreign countries to ensure that patent rights are not lost prematurely.

Applicants also are advised that in the case of inventions made in the United States, the Director of the USPTO must issue a license before applicants can apply for a patent in a foreign country. The filing of a U.S. patent application serves as a request for a foreign filing license. The application's filing receipt contains further information and guidance as to the status of applicant's license for foreign filing.

Applicants may wish to consult the USPTO booklet, "General Information Concerning Patents" (specifically, the section entitled "Treaties and Foreign Patents") for more information on timeframes and deadlines for filing foreign patent applications. The guide is available either by contacting the USPTO Contact Center at 800-786-9199, or it can be viewed on the USPTO website at http://www.uspto.gov/web/offices/pac/doc/general/index.html.

For information on preventing theft of your intellectual property (patents, trademarks and copyrights), you may wish to consult the U.S. Government website, http://www.stopfakes.gov. Part of a Department of Commerce initiative, this website includes self-help "toolkits" giving innovators guidance on how to protect intellectual property in specific countries such as China, Korea and Mexico. For questions regarding patent enforcement issues, applicants may call the U.S. Government hotline at 1-866-999-HALT (1-866-999-4158).

LICENSE FOR FOREIGN FILING UNDER

Title 35, United States Code, Section 184

Title 37, Code of Federal Regulations, 5.11 & 5.15

GRANTED

The applicant has been granted a license under 35 U.S.C. 184, if the phrase "IF REQUIRED, FOREIGN FILING LICENSE GRANTED" followed by a date appears on this form. Such licenses are issued in all applications where the conditions for issuance of a license have been met, regardless of whether or not a license may be required as

set forth in 37 CFR 5.15. The scope and limitations of this license are set forth in 37 CFR 5.15(a) unless an earlier license has been issued under 37 CFR 5.15(b). The license is subject to revocation upon written notification. The date indicated is the effective date of the license, unless an earlier license of similar scope has been granted under 37 CFR 5.13 or 5.14.

This license is to be retained by the licensee and may be used at any time on or after the effective date thereof unless it is revoked. This license is automatically transferred to any related applications(s) filed under 37 CFR 1.53(d). This license is not retroactive.

The grant of a license does not in any way lessen the responsibility of a licensee for the security of the subject matter as imposed by any Government contract or the provisions of existing laws relating to espionage and the national security or the export of technical data. Licensees should apprise themselves of current regulations especially with respect to certain countries, of other agencies, particularly the Office of Defense Trade Controls, Department of State (with respect to Arms, Munitions and Implements of War (22 CFR 121-128)); the Bureau of Industry and Security, Department of Commerce (15 CFR parts 730-774); the Office of Foreign AssetsControl, Department of Treasury (31 CFR Parts 500+) and the Department of Energy.

NOT GRANTED

No license under 35 U.S.C. 184 has been granted at this time, if the phrase "IF REQUIRED, FOREIGN FILING LICENSE GRANTED" DOES NOT appear on this form. Applicant may still petition for a license under 37 CFR 5.12, if a license is desired before the expiration of 6 months from the filing date of the application. If 6 months has lapsed from the filing date of this application and the licensee has not received any indication of a secrecy order under 35 U.S.C. 181, the licensee may foreign file the application pursuant to 37 CFR 5.15(b).

UNITED STATES PATENT AND TRADEMARK OFFICE

UNITED STATES DEPARTMENT OF COMMERCE
United States Patent and Trademark Office
Address: COMMISSIONER FOR PATENTS
P.O. Box 1450
Alexandria, Virginia 22313-1450
www.uspto.gov

APPLICATION NO.	FILING DATE	FIRST NAMED INVENTOR	ATTORNEY DOCKET NO.	CONFIRMATION NO.
10/519,820	12/30/2004	Henry Daniell	1915044	3200

29652 7590 07/06/2009
ENRIQUE G. ESTEVEZ
255 SOUTH ORANGE AVE
SUITE 1401
ORLANDO, FL 32802-3791

EXAMINER
KUBELIK, ANNE R

ART UNIT	PAPER NUMBER
1638	

MAIL DATE	DELIVERY MODE
07/06/2009	PAPER

Please find below and/or attached an Office communication concerning this application or proceeding.

The time period for reply, if any, is set in the attached communication.

UNITED STATES DEPARTMENT OF COMMERCE
U.S. Patent and Trademark Office
Address: COMMISSIONER FOR PATENTS
P.O. Box 1450
Alexandria, Virginia 22313-1450

APPLICATION NO./ CONTROL NO.	FILING DATE	FIRST NAMED INVENTOR / PATENT IN REEXAMINATION	ATTORNEY DOCKET NO.
10519820	12/30/2004	DANIELL, HENRY	1915044

EXAMINER
Anne R.. Kubelik

ART UNIT	PAPER
1638	20090612

DATE MAILED:

ENRIQUE G. ESTEVEZ
255 SOUTH ORANGE AVE
SUITE 1401
ORLANDO, FL 32802-3791

Please find below and/or attached an Office communication concerning this application or proceeding.

Commissioner for Patents

The petition filed 8 December 2008 under 37 CFR 1.84(a)(2) for color drawings is granted.

/Anne Marie Grunberg/
Supervisory Patent Examiner, Art Unit 1638

16 AUG 2005

UNITED STATES PATENT AND TRADEMARK OFFICE

COMMISSIONER FOR PATENTS
UNITED STATES PATENT AND TRADEMARK OFFICE
P.O. BOX 1450
ALEXANDRIA, VA 22313-1450
www.uspto.gov

Douglas P Mueller
Merchant & Gould
P O Box 2903
Minneapolis MN 55402-0903

In re Application of	:	
JOSEPH	:	
Application No.: 10/519,879	:	DECISION ON
PCT No.: PCT/IN03/00331	:	
Int. Filing Date: 23 June 2003	:	PETITION UNDER
Priority Date: 24 June 2002	:	
Attorney Docket No.: 13473.0006USWO	:	37 CFR 1.137(b)
For: AYURVEDIC NUTRICINAL PREPARATION	:	

This decision is in response to applicants' submission filed 30 December 2004.

BACKGROUND

On 23 June 2003, applicants filed international application PCT/IN03/00331 which designated the U.S. and claimed a priority date of 24 June 2002. A copy of the international application was communicated to the United States Patent and Trademark Office (USPTO) from the International Bureau on 21 October 2004. The thirty-month period for paying the basic national fee in the United States expired at midnight on 24 December 2004.

On 30 December 2004, applicants filed a transmittal letter for entry into the national stage in the United States, which was accompanied by, *inter alia*, the basic national fee, an assertion of small entity status, and a petition under 37 CFR 1.137(b).

DISCUSSION

A petition to revive the present application under 37 CFR 1.137(b) must include:
(1) The required reply;
(2) The petition fee;
(3) A statement that the entire delay in filing the required reply from the due date for the reply until the filing of a grantable petition was unintentional.

As to item (1), applicant submitted the basic national fee on 30 December 2004.

As to item (2), applicant submitted the petition fee on 30 December 2004.

As to item (3), the required statement has been provided.

A review of the application file reveals that, with the filing of the present petition and accompanying papers, a proper response has been submitted and all of the requirements of 37 CFR 1.137(b) for revival have been satisfied and revival is therefore appropriate.

CONCLUSION

The petition under 37 CFR 1.137(b) is **GRANTED** for the reasons set forth above.

Please direct further correspondence with respect to this matter to Mail Stop PCT, Commissioner for Patents, Office of PCT Legal Administration, P.O. Box 1450, Alexandria, Virginia 22313-1450, with the contents of the letter marked to the attention of the Office of PCT Legal Administration.

This application is being forwarded to the National Stage Processing Branch of the Office of PCT Operations to continue national stage processing of the application in accordance with this decision.

Daniel Stemmer
Legal Examiner
PCT Legal Affairs
Office of Patent Cooperation Treaty
Legal Administration
Telephone: (571) 272-3301
Facsimile: (571) 273-0459

UNITED STATES PATENT AND TRADEMARK OFFICE

UNITED STATES DEPARTMENT OF COMMERCE
United States Patent and Trademark Office
Address: COMMISSIONER FOR PATENTS
P.O. Box 1450
Alexandria, Virginia 22313-1450
www.uspto.gov

PATTERSON THUENTE CHRISTENSEN PEDERSEN, P.A.
4800 IDS CENTER
80 SOUTH 8TH STREET
MINNEAPOLIS, MN 55402-2100

Mail Date: 04/21/2010

Applicant	: Paul Meldahl	: DECISION ON REQUEST FOR
Patent Number	: 7660188	: RECALCULATION of PATENT
Issue Date	: 02/09/2010	: TERM ADJUSTMENT IN VIEW
Appliction No	: 10/519,882	: OF WYETH AND NOTICE OF INTENT TO
Filed	: 08/04/2005	: ISSUE CERTIFICATE OF CORRECTION
		:

The Request for Recalculation is **GRANTED** to the extent indicated.

The patent term adjustment has been determined to be **92** days. The USPTO will *sua sponte* issue a certificate of correction reflecting the amount of PTA days determined by the recalculation.

Prior to the issuance of the certificate of correction, the USPTO will afford patentee an opportunity to be heard and request reconsideration. Accordingly, patentee has **one month or thirty (30) days**, whichever is longer, to file a request for reconsideration of this patent term adjustment calculation. See 35 U.S.C. 154(b)(3)(B)(ii) and 37 CFR 1.322(a)(4). No extensions of time will be granted under 37 CFR 1.136.

Patentee should use document code PET.OP if electronically filing a request for reconsideration of this patent term adjustment calculation. The patentee must also include the information required by 37 CFR 1.705(b)(2) and the fee required by 37 CFR 1.18(e). If patentee does not file a timely request for reconsideration of this patent term adjustment calculation including the information required by 37 CFR 1.705(b)(2) and the fee required by 37 CFR 1.18(e), the USPTO will issue a certificate of correction reflecting the PTA determination noted above.

Patentee should be aware that in order to preserve the right to review in the United States District Court for the District of Columbia of the USPTO patent term adjustment determination, patentee must ensure that he or she also take the steps required under 35 U.S.C. 154(b)(4)(A) in a timely manner. Nothing in the request for recalculation should be construed as providing an alternative time frame for commencing a civil action under 35 U.S.C. 154(b)(4)(A).

Any questions concerning this decision should be directed to the Office of Patent Legal Administration at 571-272-7702.

UNITED STATES PATENT AND TRADEMARK OFFICE

UNITED STATES DEPARTMENT OF COMMERCE
United States Patent and Trademark Office
Address: COMMISSIONER FOR PATENTS
P.O. Box 1450
Alexandria, Virginia 22313-1450
www.uspto.gov

PATTERSON THUENTE CHRISTENSEN PEDERSEN, P.A.
4800 IDS CENTER
80 SOUTH 8TH STREET
MINNEAPOLIS, MN 55402-2100

Mail Date: 05/18/2010

Applicant : Paul Meldahl
Patent Number : 7660188
Issue Date : 02/09/2010
Application No : 10/519,882
Filed : 08/04/2005

: NOTICE CONCERNING IMPROPER
: CALCULATION OF PATENT TERM
: ADJUSTMENT BASED UPON USPTO
: IMPROPERLY MEASURING REDUCTION
: PERIOD UNDER 37 CFR 1.704(c)(10).

The United States Patent and Trademark Office (USPTO) discovered that in processing the recent recalculation decisions mailed in response to patentee's filed Request for Recalculation of Patent Term Adjustment in view of Wyeth, the USPTO improperly measured the reduction period for reductions under 37 CFR 1.704(c)(10). Pursuant to 37 CFR 1.704(c)(10), patentee's reduction begins on the date of filing the amendment under 37 CFR 1.312 ("1.312 amendment") or other related paper and ends on the date that the Office mails a response to the filing of the 1.312 amendment or other paper. It has been discovered that during the recalculation, the calculation failed to the limit the reduction to the mail date of the response to the 1.312 amendment or other paper. Accordingly, patentee's reductions were greater than warranted.

This notice **VACATES** the previous GRANTED request for recalculation and provides patentee with a revised GRANTED recalculation.

The patent term adjustment has been determined to be **189** days. The USPTO will *sua sponte* issue a certificate of correction reflecting the amount of patent term adjustment (PTA) days determined by the recalculation.

Prior to the issuance of the certificate of correction, the USPTO will afford patentee an opportunity to be heard and request reconsideration. Accordingly, patentee has **one month or thirty (30) days** from the mail date of this notice, whichever is longer, to file a request for reconsideration of this PTA calculation. See 35 U.S.C. § 154(b)(3)(B)(ii) and 37 CFR 1.322(a)(4).

Patentee should use document code PET.OP if electronically filing a request for reconsideration of this PTA calculation. The patentee must also include the information required by 37 CFR 1.705(b)(2), and the fee required by 37 CFR 1.18(e). If patentee does not file a timely request for reconsideration of this PTA calculation, including the information required by 37 CFR 1.705(b)(2) and the fee required by 37 CFR 1.18(e), the USPTO will issue a certificate of correction reflecting the PTA determination noted above.

Patentee should be aware that in order to preserve the right of review of the USPTO's PTA determination in the United States District Court for the District of Columbia, patentee must ensure that the steps required under 35 U.S.C. § 154 (b)(4) are taken in a timely manner. Nothing in the request for recalculation should be construed as providing an alternative time frame for commencing a civil action under 35 U.S.C. § 154(b)(4).

UNITED STATES PATENT AND TRADEMARK OFFICE

Commissioner for Patents
United States Patent and Trademark Office
P.O. Box 1450
Alexandria, VA 22313-1450
www.uspto.gov

REED SMITH, LLP
ATTN: PATENT RECORDS DEPARTMENT
599 LEXINGTON AVENUE, 29TH FLOOR
NEW YORK NY 10022-7650

COPY MAILED

JUL 22 2008

In re Application of	:	
Woods et al.	:	
Application No. 10/519,884	:	ON PETITION
Filed: July 15, 2005	:	
Attorney Docket No. JG-RMC-5139/5000954.20008	:	

This is a decision on the petition under 37 C.F.R. § 1.137(b), filed December 28, 2007, to revive the above-identified application.

The petition is **GRANTED**.

The petition satisfies the requirements of 37 CFR 1.137(b) in that petitioner has supplied (1) the reply in the form of an Amendment, (2) the petition fee, and (3) a proper statement of unintentional delay.

Telephone inquiries concerning this decision should be directed to the undersigned at (571) 272-3206.

This matter is being referred to Technology Center 1641 for further examination on the merits.

Liana Walsh
Petitions Examiner
Office of Petitions

UNITED STATES PATENT AND TRADEMARK OFFICE

Commissioner for Patents
United States Patent and Trademark Office
P.O. Box 1450
Alexandria, VA 22313-1450
www.uspto.gov

Richard A. Mowery, Jr.
911 Morning Sun Lane
McGregor, TX 76657

COPY MAILED
FEB 24 2006
OFFICE OF PETITIONS

In re Application of	:	
Richard A. MOWREY, JR.	:	
Application No. 10/519,912	:	DECISION ON PETITION
Filed: December 7, 2002	:	TO MAKE SPECIAL UNDER
Attorney Docket No. N/A	:	37 CFR 1.102(c)(1)
	:	

This is a decision on the petition under 37 CFR 1.102(c)(1), filed December 30, 2004, to make the above-identified application special based on applicant's age as set forth in M.P.E.P. § 708.02, Section IV.

The petition is **GRANTED**.

A grantable petition to make an application special under 37 CFR 1.102(c)(1) and MPEP § 708.02, Section IV: Applicant's Age must be accompanied by evidence showing that at least one of the applicants is 65 years of age, or more, such as a birth certificate or a statement by applicant. No fee is required

The instant petition includes a statement by applicant that he is 65 years of age or greater. Accordingly, the above-identified application has been accorded "special" status.

Telephone inquiries concerning this decision should be directed to BethAnne Dayoan at 571-272-3209.

All other inquiries concerning either the examination or status of the application should be directed to the Technology Center.

The application is being forwarded to the Technology Center 2600 for action on the merits commensurate with this decision.

BethAnne Dayoan
Petitions Examiner
Office of Petitions

UNITED STATES PATENT AND TRADEMARK OFFICE

Commissioner for Patents
United States Patent and Trademark Office
P.O. Box 1450
Alexandria, VA 22313-1450
www.uspto.gov

MORRISON & FOERSTER LLP
1650 TYSONS BOULEVARD
SUITE 400
MCLEAN, VA 22102

COPY MAILED

OCT 22 2007

OFFICE OF PETITIONS

In re Application of
Christian Polzer, et al.
Application No. 10/519,920
Filed: October 12, 2005
Attorney Docket No. 4494122079200

DECISION ON PETITION
TO WITHDRAW
FROM RECORD

This is a decision on the Request to Withdraw as attorney or agent of record under 37 C.F.R. § 1.36(b) filed May 25, 2007.

The request is **DISMISSED** as moot.

A review of the file record indicates that the power of attorney to Morrison & Foerster, LLP has been revoked by the assignee of the patent application on August 7, 2007. Accordingly, the request to withdraw under 37 C.F.R. § 1.36(b) is moot.

All future communications from the Office will continue to be directed to the below-listed address until otherwise notified by applicant.

Telephone inquires concerning this decision should be directed to undersigned at 571-272-1642.

April M. Wise
Petitions Examiner
Office of Petitions

cc: KEVIN R. SPIVAK
BELL, BOYD & LLOYD, LLC
70 WEST MADISON STREET
SUITE 3100
CHICAGO, IL 60602-4207

UNITED STATES PATENT AND TRADEMARK OFFICE

Commissioner for Patents
United States Patent and Trademark Office
P.O. Box 1450
Alexandria, VA 22313-1450
www.uspto.gov

MORRISON & FOERSTER LLP
1650 TYSONS BOULEVARD
SUITE 400
MCLEAN, VA 22102

COPY MAILED

OCT 2 2 2007

OFFICE OF PETITIONS

In re Application of	:	
Axel Findling, et al.	:	
Application No. 10/519,921	:	DECISION ON PETITION
Filed: January 3, 2005	:	TO WITHDRAW
Attorney Docket No. 449122078800	:	FROM RECORD
	:	

This is a decision on the Request to Withdraw as attorney or agent of record under 37 C.F.R. § 1.36(b) filed May 25, 2007.

The request is **DISMISSED** as moot.

A review of the file record indicates that the power of attorney to Morrison & Foerster, LLP has been revoked by the assignee of the patent application on August 7, 2007. Accordingly, the request to withdraw under 37 C.F.R. § 1.36(b) is moot.

All future communications from the Office will continue to be directed to the below-listed address until otherwise notified by applicant.

Telephone inquires concerning this decision should be directed to undersigned at 571-272-1642.

April M. Wise
Petitions Examiner
Office of Petitions

cc: KEVIN R. SPIVAK
BELL, BOYD & LLOYD, LLC
70 WEST MADISON STREET
SUITE 3100
CHICAGO, IL 60602-4207

UNITED STATES PATENT AND TRADEMARK OFFICE

UNITED STATES DEPARTMENT OF COMMERCE
United States Patent and Trademark Office
Address: COMMISSIONER FOR PATENTS
P.O. Box 1450
Alexandria, Virginia 22313-1450
www.uspto.gov

SUGHRUE-265550
2100 PENNSYLVANIA AVE. NW
WASHINGTON, DC 20037-3213

Mail Date: 04/20/2010

Applicant	: Tasuku Honjo	: DECISION ON REQUEST FOR
Patent Number	: 7595048	: RECALCULATION of PATENT
Issue Date	: 09/29/2009	: TERM ADJUSTMENT IN VIEW
Appliction No	: 10/519,925	: OF WYETH AND NOTICE OF INTENT TO
Filed	: 01/03/2005	: ISSUE CERTIFICATE OF CORRECTION
		:

The Request for Recalculation is **GRANTED** to the extent indicated.

The patent term adjustment has been determined to be **403** days. The USPTO will *sua sponte* issue a certificate of correction reflecting the amount of PTA days determined by the recalculation.

Prior to the issuance of the certificate of correction, the USPTO will afford patentee an opportunity to be heard and request reconsideration. Accordingly, patentee has **one month or thirty (30) days**, whichever is longer, to file a request for reconsideration of this patent term adjustment calculation. See 35 U.S.C. 154(b)(3)(B)(ii) and 37 CFR 1.322(a)(4). No extensions of time will be granted under 37 CFR 1.136.

Patentee should use document code PET.OP if electronically filing a request for reconsideration of this patent term adjustment calculation. The patentee must also include the information required by 37 CFR 1.705(b)(2) and the fee required by 37 CFR 1.18(e). If patentee does not file a timely request for reconsideration of this patent term adjustment calculation including the information required by 37 CFR 1.705(b)(2) and the fee required by 37 CFR 1.18(e), the USPTO will issue a certificate of correction reflecting the PTA determination noted above.

Patentee should be aware that in order to preserve the right to review in the United States District Court for the District of Columbia of the USPTO patent term adjustment determination, patentee must ensure that he or she also take the steps required under 35 U.S.C. 154(b)(4)(A) in a timely manner. Nothing in the request for recalculation should be construed as providing an alternative time frame for commencing a civil action under 35 U.S.C. 154(b)(4)(A).

Any questions concerning this decision should be directed to the Office of Patent Legal Administration at 571-272-7702.

29 SEP 2005

United States Patent and Trademark Office

Commissioner for Patents
United States Patent and Trademark Office
P.O. Box 1450
Alexandria, VA 22313-1450
www.uspto.gov

Levine & Mandelbaum
444 Madison Avenue
35th Floor
New York, NY 10022

In re Application of	:	
Carrez et al.	:	
Application No.: 10/519,926	:	
PCT No.: PCT/FR03/03410	:	
Int. Filing Date: 18 November 2003	:	DECISION
Priority Date: 20 November 2002	:	
Attorney Docket No.: MART0850US	:	
For: Device For Locoregional Anesthesia And Method	:	
For Making The Cannula Of Such Device	:	

This is in response to the correspondence addressed to the PCT Legal Office and filed on 06 September 2005.

BACKGROUND

This international application was filed on 18 November 2003, claimed an earlier priority date of 20 November 2002, and designated the United States. The International Bureau transmitted a copy of the published international application to the USPTO on 10 June 2004. The 30 month time period to pay the basic national fee in the U.S. expired as of midnight on 20 May 2005. On 30 December 2004, applicants filed *inter alia* the basic national fee.

On 13 July 2005, a Notice of Acceptance (Form PCT/DO/EO/903) was mailed to applicants, indicating that the date of this application under 35 U.S.C. 371(c)(1), (2) and (4) was "12/30/2004," and that the date of completion of all 35 U.S.C. 371 requirements was "05/20/2005."

DISCUSSION

Counsel indicates that the Notice of Acceptance mailed on 13 July 2005 was improper because "the above referenced application to enter the national stage in the U.S. was filed by express mail on December 9, 2004 without an inventors' declaration." Review of the record reveals that a declaration under PCT Rule 4.17(iv) was filed with the PCT Request (Form PCT/RO/101), and that said declaration was in compliance with 37 CFR 1.497(a) and (b). Therefore, said declaration satisfies 35 U.S.C. 371(c)(4). Although counsel refers to a filing by "Express Mail" on 09 December 2004, the application file does not currently include any evidence that correspondence was filed on that date. Instead, the record shows the correspondence directed to the U.S. national stage of this international application was first filed on 30 December 2004, and that all of the requirements of 35 U.S.C. 371(c)(1), (2) and (4) were present on that date. It is noted that the "date of completion of all 35 U.S.C. 371 requirements" was 20 May 2005 because applicants did not make an express request under 35 U.S.C. 371(f), so the national stage did not commence until 30 months had elapsed from the claimed priority date.

Counsel further requests that the $360.00 multiple dependent claims fee be refunded because "it is applicant's intent to file a preliminary amendment which will eliminate all multiple

dependencies from the claims with the inventors' declaration upon receipt of the notice of missing requirements." However, review of the application file reveals that no such amendment appears to have actually been filed. Although 37 CFR 1.26 does provide that "The Director may refund any fee paid by mistake or in excess of that required," counsel has not demonstrated that the $360.00 multiple dependent claims fee was in fact paid by mistake or was in excess of that required for the claim set which was presented. Therefore, it would not be appropriate to grant the refund request at this time.

DECISION

The request for issuance of a notification of missing requirements and the request for a fee refund are **DISMISSED**, without prejudice, as described above.

Any further correspondence regarding this matter should be addressed to the Commissioner for Patents, Mail Stop PCT, P.O. Box 1450, Alexandria, Virginia 22313-1450, with the contents of the letter marked to the attention of the Office of PCT Legal Administration.

Richard Cole
PCT Legal Examiner
PCT Legal Office

George M. Dombroske
PCT Legal Examiner
PCT Legal Office
Tel: (571) 272-3283
Fax: (571) 273-0459

UNITED STATES PATENT AND TRADEMARK OFFICE

UNITED STATES DEPARTMENT OF COMMERCE
United States Patent and Trademark Office
Address: COMMISSIONER FOR PATENTS
P.O. Box 1450
Alexandria, Virginia 22313-1450
www.uspto.gov

OLIFF & BERRIDGE, PLC
P.O. BOX 320850
ALEXANDRIA, VA 22320-4850

Mail Date: 04/22/2010

Applicant	: Fumihiro Arakawa	: DECISION ON REQUEST FOR
Patent Number	: 7642469	: RECALCULATION of PATENT
Issue Date	: 01/05/2010	: TERM ADJUSTMENT IN VIEW
Appliction No	: 10/519,935	: OF WYETH AND NOTICE OF INTENT TO
Filed	: 12/29/2004	: ISSUE CERTIFICATE OF CORRECTION
		:

The Request for Recalculation is **GRANTED** to the extent indicated.

The patent term adjustment has been determined to be **1302** days. The USPTO will *sua sponte* issue a certificate of correction reflecting the amount of PTA days determined by the recalculation.

Prior to the issuance of the certificate of correction, the USPTO will afford patentee an opportunity to be heard and request reconsideration. Accordingly, patentee has **one month or thirty (30) days**, whichever is longer, to file a request for reconsideration of this patent term adjustment calculation. See 35 U.S.C. 154(b)(3)(B)(ii) and 37 CFR 1.322(a)(4). No extensions of time will be granted under 37 CFR 1.136.

Patentee should use document code PET.OP if electronically filing a request for reconsideration of this patent term adjustment calculation. The patentee must also include the information required by 37 CFR 1.705(b)(2) and the fee required by 37 CFR 1.18(e). If patentee does not file a timely request for reconsideration of this patent term adjustment calculation including the information required by 37 CFR 1.705(b)(2) and the fee required by 37 CFR 1.18(e), the USPTO will issue a certificate of correction reflecting the PTA determination noted above.

Patentee should be aware that in order to preserve the right to review in the United States District Court for the District of Columbia of the USPTO patent term adjustment determination, patentee must ensure that he or she also take the steps required under 35 U.S.C. 154(b)(4)(A) in a timely manner. Nothing in the request for recalculation should be construed as providing an alternative time frame for commencing a civil action under 35 U.S.C. 154(b)(4)(A).

Any questions concerning this decision should be directed to the Office of Patent Legal Administration at 571-272-7702.

UNITED STATES PATENT AND TRADEMARK OFFICE

UNITED STATES DEPARTMENT OF COMMERCE
United States Patent and Trademark Office
Address: COMMISSIONER FOR PATENTS
P.O. Box 1450
Alexandria, Virginia 22313-1450
www.uspto.gov

APPLICATION NO.	FILING DATE	FIRST NAMED INVENTOR	ATTORNEY DOCKET NO.	CONFIRMATION NO.
10/519,955	12/30/2004	Kasper Kokkonen	4819-4735	7370

27123 7590 02/25/2009
MORGAN & FINNEGAN, L.L.P.
3 WORLD FINANCIAL CENTER
NEW YORK, NY 10281-2101

EXAMINER
YANG, JIE

ART UNIT	PAPER NUMBER
1793	

NOTIFICATION DATE	DELIVERY MODE
02/25/2009	ELECTRONIC

Please find below and/or attached an Office communication concerning this application or proceeding.

The time period for reply, if any, is set in the attached communication.

Notice of the Office communication was sent electronically on above-indicated "Notification Date" to the following e-mail address(es):

PTOPatentCommunications@Morganfinnegan.com
Shopkins@Morganfinnegan.com
jmedina@Morganfinnegan.com

UNITED STATES PATENT AND TRADEMARK OFFICE

Commissioner for Patents
United States Patent and Trademark Office
P.O. Box 1450
Alexandria, VA 22313-1450
www.uspto.gov

Mailed: 2/25/09

caf

In re application of Kokkonen et al. Serial No. 10/519,955 Filed: December 30, 2004 For: METHOD AND ARRANGEMENT FOR FEEDING AN ANODE INTO A SMELTING REACTOR	: : : : : :	DECISION ON PETITION

This is a decision on the PETITION FROM REQUIREMENT FOR RESTRICTION UNDER 37 CFR §1.144 requesting the restriction requirement in the office action mailed on August 24, 2007 be set aside as improper.

On August 24, 2007 a restriction requirement was mailed to applicants. In this requirement, the examiner held that the claims lack unity under PCT Rules 13.1 – 13.4 because the special technical feature linking the claims does not make a contribution over the art. Applicants traversed the restriction requirement in the response filed September 17, 2007. A non-final office action was mailed by the examiner on October 4, 2007, which made the restriction requirement final. A final rejection was mailed March 31, 2008. A request for continued examination was filed June 10, 2008. Another non-final action was mailed on August 7, 2008.

The instant petition was then filed November 7, 2008. Accordingly, the instant petition is timely and will be decided on its merits.

DECISION

The instant application has been filed under 35 U.S.C. 371 as a national phase application of PCT/EP03/04645 and as such is subject to the unity requirements set out in PCT Rules 13.1 – 13.4 and 37 CFR 1.475, as well as the PCT Administrative Instructions, Annex B. The PCT Administrative Instructions, Annex B, Part 1 at (b) state that "the special technical features" common to all groupings of inventions shall be defined, as in PCT Rule 13.2, to mean,

> "those technical features which each of the claimed inventions, **considered as a whole, makes over the prior art.**" (Emphasis added)

In the instant case, the description and the claims set forth the special technical feature of feeding an anode into a metallurgical smelting reactor and a bending element and radius of curvature.

However the special technical feature(s) have been shown at page 2 of the office action mailed October 4, 2007 to not make a contribution over the prior art of Ikoma (US Patent No. 5,685,892). Therefore, the examiner's findings that there is lack of unity of invention between the groups as set forth in the restriction requirement was correct. The reason for such being that the groups constitute additional inventions not sharing a "special technical relationship" within the meaning of PCT Rule 13.2 since the identified "special technical feature" does not make a contribution over the prior art.

Accordingly, the petition is **DENIED.** The application remains in pending status awaiting a response to the non-final office action mailed August 7, 2008.

/JACQUELINE STONE/

Jacqueline Stone, Director
Technology Center 1700
Chemical and Materials Engineering

MORGAN & FINNEGAN, L.L.P.
3 WORLD FINANCIAL CENTER
NEW YORK NY 10281-2101

29 AUG 2005

#5

UNITED STATES PATENT AND TRADEMARK OFFICE

Commissioner for Patents
United States Patent and Trademark Office
P.O. Box 1450
Alexandria, VA 22313-1450
www.uspto.gov

Ashley I. Pezzner
Connolly Bove Lodge & Hutz, LLP
1007 North Orange Street
P.O. Box 2207
Wilmington, Delaware 19899

In re Application of STOSSEL, et al. Application No.: 10/519,967 PCT No.: PCT/EP03/06287 Int. Filing Date: 14 June 2003 Priority Date: 29 June 2002 Atty. Docket No.: 09931-00034-US For: 2,1,3-BENOTHIADIAZOLES AS ELECTRONIC ACTIVE COMPONENTS	DECISION ON PETITION UNDER 37 CFR 1.137(b)

The petition to revive under 37 CFR 1.137(b) filed 30 December 2004 in the above-captioned application is hereby **GRANTED** as follows:

Applicant's statement that "the entire delay in filing the required reply from the due date for the required reply until the filing of a grantable petition under 37 CFR 1.137(b) was unintentional" and the prompt filing of the petition satisfies the requirement of 37 CFR 1.137(b)(3).

A review of the application file reveals that applicant has now provided payment of the full, U.S. Basic National Fee. Therefore, the request to revive the application abandoned under 35 U.S.C. 371(d) is granted as to the National stage in the United States of America. Further, a review of the application file reveals that all of the requirements of 35 U.S.C. 371 for entry into the national stage in the United States were satisfied with the filing of an executed declaration of the inventors.

The application has an international filing date of 14 June 2003 under 35 U.S.C. 363 and will be given a date of **14 April 2005** under 35 U.S.C. 371(c)(1), (c)(2) and (c)(4).

This application is being returned to the United States Designated/Elected Office (DO/EO/US) for treatment in accordance with this decision.

Derek A. Putonen
Attorney Advisor
Office of PCT Legal Administration
Tel: (571) 272-3294
Fax: (571) 273-0459

SPE RESPONSE FOR CERTIFICATE OF CORRECTION

Paper No.: X

DATE : AUGUST 15, 2007

TO SPE OF : ART UNIT 1774

SUBJECT : Request for Certificate of Correction for Appl. No.: 10/519,967 Patent No.: 7223484

A response is requested with respect to a request for a certificate of correction.

With respect to the change(s) requested to correct Office and/or Applicant's errors, should the patent read as shown in the certificate of correction attached herewith or the COCIN document(s), in IFW images for the above-identified patented application? No new matter should be introduced, nor should the scope or meaning of the claims be changed.

If the response is for an IFW, within 7 days, please complete and forward the response, to the employee (named below) via scanning into application images, using document code **COCX**

DO NOT SENT TO ATTORNEY

If the response is for a paper file wrapper, please complete the response and forward the response with the paper file wrapper, to the employee (named below), within 7 days, to:

Certificates of Correction Branch (CofC)
South Tower - 9A22
Palm Location 7580

LAMONTE NEWSOME
Certificates of Correction Branch
703-308-9390 ext. 112

Thank You For Your Assistance

The request for issuing the above-identified correction(s) is hereby:
Note your decision on the appropriate box.

- [x] **Approved** — **All** changes apply.
- [ ] **Approved in Part** — Specify below which changes **do not** apply.
- [ ] **Denied** — State the reasons for denial below.

Comments: _____

MILTON I. CANO
~~SUPERVISORY PATENT EXAMINER~~
SPE

1774
Art Unit

UNITED STATES PATENT AND TRADEMARK OFFICE

Commissioner for Patents
United States Patent and Trademark Office
P.O. Box 1450
Alexandria, VA 22313-1450
www.uspto.gov

31 JUL 2007

FAY KAPLUN & MARCIN, LLP
150 BROADWAY, SUITE 702
NEW YORK, NY 10038

In re Application of	:	
CHACQUES, Juan Carlos et al.	:	
Application No.: 10/519,974	:	
PCT No.: PCT/ES03/ 00285	:	DECISION ON
Int. Filing Date: 11 June 2003	:	
Priority Date: 02 July 2002	:	PETITION UNDER
Attorney's Docket No.: 40140/00701	:	
For: Medium For Culturing Autologous Human Progenitor Stem Cells And Applications Thereof	:	37 CFR 1.181

This communication is issued in response to applicants' "Request To Correct Inventorship Under 37 CFR 1.48(A)," filed 10 July 2007. Applicants' submission has been treated as a petition under 37 CFR 1.181 requesting that the inventorship of the instant application be Juan Carlos Chachques, Felipe Prosper Cardoso and Jesus Herreros Gonzalez.

BACKGROUND

On 11 June 2003, applicant filed international application PCT/ES03/ 00285, claiming a priority date of 02 July 2002. The thirty-month period for paying the basic national fee in the United States expired at midnight on 02 January 2005.

On 30 December 2004, applicant filed a transmittal letter for entry into the national stage in the United States, which was accompanied, *inter alia*, by the requisite basic national fee.

On 21 June 2005, the Office mailed a Notification of Missing Requirements (Form PCT/DO/EO/905) indicating that an oath or declaration of the inventors in compliance with 37 CFR 1.497(a)-(b) and the surcharge for late filing of the oath or declaration were required.

On 04 January 2006, applicants filed a response to the Notification of Missing Requirements including, an executed declaration by inventors Felipe Prosper Cardoso and Jesus Herreros Gonzalez, the surcharge for late filing of the declaration and a five-month extension fee.

On 31 January 2006, the Office mailed a Notice of Acceptance (Form PCT/DO/EO/903) granting a date under 35 U.S.C. 371(c)(1), (c)(2) and (c)(4) of 04 January 2006.

On 10 July 2007, applicants filed by facsimile the instant petition to add Juan Carlos Chachques as an inventor in the instant application and a credit card payment form authorizing payment of a petition fee of $130.

On 16 July 2007, applicants filed by mail a duplicate of the papers originally filed 10 July 2007 requesting the addition of Juan Carlos Chachques as an inventor in the instant application.

DISCUSSION

Under 37 CFR 1.497, the declaration must be made by all of the actual inventors in the international application. A review of the papers in the instant application show that the inventive entity set forth in the international application is Juan Carlos Chachques, Felipe Prosper Cardoso and Jesus Herreros Gonzalez. Therefore, the inventive entity in the instant application is the same as that of the international application.

The submitted declarations on 04 January 2006 and 10 July 2007 do not comply with 37 CFR 1.497(a)-(b) because the declarations do not list all the inventors (See MPEP §605.04(a)(I): "[E]ach oath or declaration executed by an inventor must contain a complete listing of all inventors so as to clearly indicate what each inventor believes to be the appropriate inventive entity."). Applicants are required to provide a copy of the complete declaration executed by each of the cooperating inventors. Hence, the submitted declaration in the instant application does not comply with 37 CFR 1.497(a)-(b).

With regard to the petition fee of $130, applied to applicants' credit card on 17 July 2007, because the inventive entity in the international application has not changed, a petition fee is not required. Therefore, the $130 fee is refunded to applicants' Deposit Account No. 50-1492.

CONCLUSION

For the reasons stated above, the petition under 37 C.F.R. 1.181 is **DISMISSED** without prejudice.

The Notice of Acceptance (Form PCT/DO/EO/903) mailed 31 January 2006 is **VACATED**.

This application is being forwarded to the National Stage Processing Division of the Office of the PCT Operations for continued processing. A Notification of Defective Response (Form PCT/DO/EO/916) will be mailed.

If reconsideration on the merits of this petition is desired, a proper response must be filed within TWO (2) MONTHS from the mail date of this decision. A proper response is a complete declaration executed by each of the cooperating inventors.

Any further correspondence with respect to this matter should be addressed to Mail Stop PCT, Commissioner for Patents, Office of PCT Legal Administration, P.O. Box 1450, Alexandria, VA 22313-1450, with the contents of the letter marked to the attention of the PCT Legal Office.

Leonard Smith
PCT Legal Examiner
Office of PCT Legal Administration
Telephone: (571) 272-3297
Facsimile: (571) 273-0459

Stefan Staicovici
PCT Legal Examiner
Office of PCT Legal Administration
Telephone: (571) 272-1208

2 1 NOV 2007

UNITED STATES PATENT AND TRADEMARK OFFICE

Commissioner for Patents
United States Patent and Trademark Office
P.O. Box 1450
Alexandria, VA 22313-1450
www.uspto.gov

FAY KAPLUN & MARCIN, LLP
150 Broadway, Suite 702
New York, NY 10038

In re Application of:	:	
CHACQUES, Juan Carlos, et al.	:	DECISION
U.S. Application No.: 10/519,974	:	
PCT No.: PCT/ES2003/000285	:	
International Filing Date: 11 June 2003	:	
Priority Date: 02 July 2002	:	
Atty Docket No.: 40140/00701	:	
For: MEDIUM FOR CULTURING	:	
AUTOLOGOUS HUMAN	:	
PROGENITOR STEM CELLS AND	:	
APPLICATIONS THEREOF	:	

This decision is issued in response to the "Response" filed by applicants on 06 September 2007, treated herein as a petition under 37 CFR 1.181 requesting acceptance of the revised declaration included therewith. No petition fee is required.

BACKGROUND

The procedural background for the present application was set forth in the previous decision mailed on 31 July 2007. That decision vacated the previously mailed Notification Of Acceptance based on applicants' failure to file a declaration executed by all of the inventors of record herein.

Specifically, applicants had filed two separate declarations, one of which named, and was executed by, two of the inventors of record: Felipe Prosper CARDOSO, and Jesus Herreros GONZALEZ; the second declaration named, and was executed by the third inventor of record, Juan Carlos CHACHQUES. Because neither of these declarations properly identified all three inventors of record, the declarations were found not to comply with 37 CFR 1.497.

On 06 September 2007, applicants filed the "Response" considered herein, accompanied by a revised declaration.

DISCUSSION

The revised declaration included with the 06 September 2007 names, and is executed by, Juan Carlos CHACHQUES, Felipe Prosper CARDOSO, and Jesus Herreros GONZALEZ. These are the inventors of record in the present national stage application. See MPEP Section 1893.01(e): "The inventorship of an international application entering the national stage under 35

U.S.C. 371 is that inventorship set forth in the international application, which includes any changes effected under PCT Rule 92*bis*."[1]

Based on the above, the revised declaration filed 06 September 2007 is executed by all the inventors of record herein. A review of the declaration reveals that it includes all required statements and information. Accordingly, the revised declaration is acceptable in compliance with 37 CFR 1.497.

CONCLUSION

Applicants' petition under 37 CFR 1.181 for acceptance of the revised declaration under 37 CFR 1.497 is **GRANTED**.

The declaration filed 06 September 2007 complies with 37 CFR 1.497(a) and (b).

The inventors of record herein are Juan Carlos CHACHQUES, Felipe Prosper CARDOSO, and Jesus Herreros GONZALEZ, as set forth in the declaration filed 06 September 2007 and in the international application.

No correction of the inventorship of record is required.

This application is being referred to the National Stage Processing Branch of the Office of PCT Operations for further processing in accordance with this decision. The date under 35 U.S.C. 371(c)(1), (c)(2), and (c)(4) is 06 September 2007.

Richard M. Ross
Attorney Advisor
Office of PCT Legal Administration
Telephone: (571) 272-3296
Facsimile: (571) 273-0459

[1] It is noted that applicants listing of only two of these inventors on the materials filed to initiate the present national stage application did not act to modify the inventorship of record herein.

UNITED STATES PATENT AND TRADEMARK OFFICE

UNITED STATES DEPARTMENT OF COMMERCE
United States Patent and Trademark Office
Address: COMMISSIONER FOR PATENTS
P.O. Box 1450
Alexandria, Virginia 22313-1450
www.uspto.gov

ROTHWELL, FIGG, ERNST & MANBECK, P.C.
1425 K STREET, N.W.
SUITE 800
WASHINGTON, DC 20005

Mail Date: 04/20/2010

Applicant	: William B. O'Neal	: DECISION ON REQUEST FOR
Patent Number	: 7632782	: RECALCULATION of PATENT
Issue Date	: 12/15/2009	: TERM ADJUSTMENT IN VIEW
Appliction No	: 10/519,978	: OF WYETH AND NOTICE OF INTENT TO
Filed	: 01/03/2005	: ISSUE CERTIFICATE OF CORRECTION
		:

The Request for Recalculation is **GRANTED** to the extent indicated.

The patent term adjustment has been determined to be **850** days. The USPTO will *sua sponte* issue a certificate of correction reflecting the amount of PTA days determined by the recalculation.

Prior to the issuance of the certificate of correction, the USPTO will afford patentee an opportunity to be heard and request reconsideration. Accordingly, patentee has **one month or thirty (30) days**, whichever is longer, to file a request for reconsideration of this patent term adjustment calculation. See 35 U.S.C. 154(b)(3)(B)(ii) and 37 CFR 1.322(a)(4). No extensions of time will be granted under 37 CFR 1.136.

Patentee should use document code PET.OP if electronically filing a request for reconsideration of this patent term adjustment calculation. The patentee must also include the information required by 37 CFR 1.705(b)(2) and the fee required by 37 CFR 1.18(e). If patentee does not file a timely request for reconsideration of this patent term adjustment calculation including the information required by 37 CFR 1.705(b)(2) and the fee required by 37 CFR 1.18(e), the USPTO will issue a certificate of correction reflecting the PTA determination noted above.

Patentee should be aware that in order to preserve the right to review in the United States District Court for the District of Columbia of the USPTO patent term adjustment determination, patentee must ensure that he or she also take the steps required under 35 U.S.C. 154(b)(4)(A) in a timely manner. Nothing in the request for recalculation should be construed as providing an alternative time frame for commencing a civil action under 35 U.S.C. 154(b)(4)(A).

Any questions concerning this decision should be directed to the Office of Patent Legal Administration at 571-272-7702.

UNITED STATES PATENT AND TRADEMARK OFFICE

UNITED STATES DEPARTMENT OF COMMERCE
United States Patent and Trademark Office
Address: COMMISSIONER FOR PATENTS
P.O. Box 1450
Alexandria, Virginia 22313-1450
www.uspto.gov

RABIN & Berdo, PC
1101 14TH STREET, NW
SUITE 500
WASHINGTON, DC 20005

Mail Date: 04/21/2010

Applicant	: Hiroshi Kimura	: DECISION ON REQUEST FOR
Patent Number	: 7615921	: RECALCULATION of PATENT
Issue Date	: 11/10/2009	: TERM ADJUSTMENT IN VIEW
Appliction No	: 10/520,005	: OF WYETH AND NOTICE OF INTENT TO
Filed	: 12/14/2005	: ISSUE CERTIFICATE OF CORRECTION
		:

The Request for Recalculation is **GRANTED** to the extent indicated.

The patent term adjustment has been determined to be **745** days. The USPTO will *sua sponte* issue a certificate of correction reflecting the amount of PTA days determined by the recalculation.

Prior to the issuance of the certificate of correction, the USPTO will afford patentee an opportunity to be heard and request reconsideration. Accordingly, patentee has **one month or thirty (30) days**, whichever is longer, to file a request for reconsideration of this patent term adjustment calculation. See 35 U.S.C. 154(b)(3)(B)(ii) and 37 CFR 1.322(a)(4). No extensions of time will be granted under 37 CFR 1.136.

Patentee should use document code PET.OP if electronically filing a request for reconsideration of this patent term adjustment calculation. The patentee must also include the information required by 37 CFR 1.705(b)(2) and the fee required by 37 CFR 1.18(e). If patentee does not file a timely request for reconsideration of this patent term adjustment calculation including the information required by 37 CFR 1.705(b)(2) and the fee required by 37 CFR 1.18(e), the USPTO will issue a certificate of correction reflecting the PTA determination noted above.

Patentee should be aware that in order to preserve the right to review in the United States District Court for the District of Columbia of the USPTO patent term adjustment determination, patentee must ensure that he or she also take the steps required under 35 U.S.C. 154(b)(4)(A) in a timely manner. Nothing in the request for recalculation should be construed as providing an alternative time frame for commencing a civil action under 35 U.S.C. 154(b)(4)(A).

Any questions concerning this decision should be directed to the Office of Patent Legal Administration at 571-272-7702.

1 5 MAY 2009

United States Patent and Trademark Office

Commissioner for Patents
United States Patent and Trademark Office
P.O. Box 1450
Alexandria, VA 22313-1450
www.uspto.gov

ADAMS INTELLECTUAL PROPERTY LAW, P.A.
Suite 2350 Charlotte Plaza
201 South College Street
CHARLOTTE NC 28244

In re Application of	:	
Okada et al.	:	
Application No.: 10/520,016	:	
PCT No.: PCT/JP03/08306	:	
Int. Filing Date: 30 June 2003	:	DECISION
Priority Date: 01 July 2002	:	
Attorney Docket No.: 3348/2	:	
For: Human IgM Antibody Lysing Activated Lymphocytes	:	
Under Mediation By Homologous Complement	:	

This is in response to the "Petition Under 37 CFR 1.135" filed on 16 March 2009. The petition is being treated under 37 CFR 1.181.

BACKGROUND

This international application was filed on 30 June 2003, claimed an earliest priority date of 01 July 2002, and designated the U.S. The International Bureau transmitted a copy of the published international application to the USPTO on 08 January 2004. The 30 month time period for paying the basic national fee in the United States expired at midnight on 01 January 2005. Applicants filed *inter alia* the basic national fee on 29 December 2004.

On 23 January 2006, a Notice of Acceptance (Form PCT/DO/EO/903) was mailed to applicants.

On 07 November 2006, a Notification To Comply (Form PCT/DO/EO/922) was mailed to applicants, requiring the submission of an initial computer readable form (CRF) of the sequence listing, an initial paper or compact disc copy of the sequence listing, an amendment specifically directing its entry into the application, and a statement that the contents of the CRF are identical to those of the written sequence listing and (where applicable) contains no new matter. The Notification set a two month period for response, extendable under 37 CFR 1.136(a). Also mailed was a "Withdrawal Of Previously Sent Notice" withdrawing (vacating) the Notice of Acceptance (Form PCT/DO/EO/903) mailed on 23 January 2006.

On 22 February 2007, a Notification of Abandonment (Form PCT/DO/EO/909) was mailed to applicants, indicating that this international application had become abandoned with respect to the national stage in the United States for failure to timely reply to the Form PCT/DO/EO/922 mailed on 07 November 2006.

On 07 May 2007, applicants filed a response which urged, *inter alia*, that the Notification of Abandonment "was issued in error."

DISCUSSION

Petitioner argues that the Notification of Abandonment "was issued in error" because it "did not factor in" the possibility of extensions under 37 CFR 1.136(a). Review of the record reveals that the period for response to the Form PCT/DO/EO/922 mailed on 07 November 2006 would, if extended five months under 37 CFR 1.136(a), expire as of midnight on 07 June 2007.

Therefore, the Notice of Abandonment (Form PCT/DO/EO/909) mailed on 22 February 2007 was premature, and accordingly it is hereby **VACATED**. The holding of abandonment is hereby **WITHDRAWN**.

DECISION

The petition is **GRANTED** as discussed above.

This application is being returned to the Office of Patent Application Processing for continued processing, including correction of the electronic records of the USPTO to show his application as pending, and processing of applicants' response filed on 07 May 2007.

/George Dombroske/
George Dombroske
PCT Legal Examiner
Office of PCT Legal Administration
Tel: (571) 272-3283
Fax: (571) 273-0459

3 0 MAR 2010

United States Patent and Trademark Office

Commissioner for Patents
United States Patent and Trademark Office
P.O. Box 1450
Alexandria, VA 22313-1450
www.uspto.gov

ADAMS INTELLECTUAL PROPERTY LAW, P.A.
Suite 2350 Charlotte Plaza
201 South College Street
CHARLOTTE NC 28244

In re Application of	:	
Okada et al.	:	
Application No.: 10/520,016	:	
PCT No.: PCT/JP03/08306	:	
Int. Filing Date: 30 June 2003	:	DECISION
Priority Date: 01 July 2002	:	
Attorney Docket No.: 3348/2	:	
For: Human IgM Antibody Lysing Activated Lymphocytes	:	
Under Mediation By Homologous Complement	:	

This is in response to the "Reply to Notification of Defective Response" filed on 20 January 2010, which includes a petition under 37 CFR 1.137(b).

BACKGROUND

In a Decision mailed on 15 May 2009, the petition filed on 16 March 2009 was treated under 37 CFR 1.181 and granted. The application was returned to the Office of Patent Application Processing for further processing, including processing of the response filed on 07 May 2007.

On 08 June 2009, a Notification of Defective Response (Form PCT/DO/EO/916) was mailed, requiring a computer-readable form (CRF) of the sequence listing, and a statement that the CRF of the sequence listing is identical to the written (paper or CD) sequence and, where applicable, contains no new matter. The period for response expired as of midnight on 08 July 2009. The international application became abandoned with respect to the national stage in the United States for failure to timely reply.

On 20 January 2010, applicants filed the instant reply, including a petition under 37 CFR 1.137(b).

On 19 February 2010, another Notification of Defective Response (Form PCT/DO/EO/916) was mailed.

On 18 March 2010, applicants filed a further response.

DISCUSSION

Petitioner states that the Notification of Defective Response mailed on 08 June 2009 "was never received by mail by the Applicant," but this statement is accompanied by a petition under 37 CFR 1.137(b).

The petition complies with 37 CFR 1.137(b) because the required reply has been filed.

The petition complies with 37 CFR 1.137(b)(2) because the petition fee has been paid.

The petition complies with 37 CFR 1.137(b)(3) because it includes an appropriate statement of unintentional delay.

The petition complies with 37 CFR 1.137(b)(4) because no terminal disclaimer is required.

Therefore, all of the requirements for reply under 37 CFR 1.137(b) have been satisfied.

DECISION

The petition is **GRANTED**.

This application is being returned to the Office of Patent Application Processing for continued processing. Its date under 35 U.S.C. 371(c)(1), (2) and (4) is **20 October 2005**.

/George Dombroske/
George Dombroske
PCT Legal Examiner
Office of PCT Legal Administration
Tel: (571) 272-3283

UNITED STATES PATENT AND TRADEMARK OFFICE

Commissioner for Patents
United States Patent and Trademark Office
P.O. Box 1450
Alexandria, VA 22313-1450
www.uspto.gov

ALBIHNS STOCKHOLM AB
Linnegatan 2
BOX 5581
SE-114 85 Stockholm SWEDEN

COPY MAILED

SEP 12 2006

OFFICE OF PETITIONS

In re Application of	:	
MOREIN, et al.	:	
Application No. 10/520,022	:	DECISION ON PETITION
Filed: January 23, 2006	:	TO WITHDRAW
Attorney Docket No. 67185-78227	:	FROM RECORD
	:	

This is a decision on the Request to Withdraw as attorney or agent of record under 37 C.F.R. § 1.36(b), filed June 29, 2006.

The request is **NOT APPROVED**.

A grantable request to withdraw as attorney/agent of record must be signed by every attorney/agent seeking to withdraw or contain a clear indication that one attorney is signing on behalf of another/others. A request to withdraw will not be approved unless at least 30 (thirty) days would remain between the date of approval and the later of the expiration date of a time to file a response or the expiration date of the maximum time period which can be extended under 37 C.F.R. § 1.136(a).

The Office cannot approve the request at this time since the reasons provided do not meet any of the conditions under the mandatory or permissive categories enumerated in 37 CFR 10.40. Section 10.40 of Title 37 of the Code of Federal Regulation states, "[a] practitioner shall not withdraw from employment in a proceeding before the Office without permission from the Office[.]" More specifically, 37 CFR 10.40 states, "[i]f paragraph (b) of this section is not applicable, a practitioner may not request permission to withdraw in matter pending before the Office unless such request or such withdrawal is" for one the permissive reasons listed in 37 CFR 10.40(c). The reasons set forth in the request, "Leaving the employ of Customer No. 26288", do not meet any of the conditions set forth in 37 CFR 10.40.

All future communications from the Office will continue to be directed to the above-listed address until otherwise notified by applicant.

Telephone inquiries concerning this decision should be directed to Patricia Volpe at 571-272-6825.

David Bucci
Petitions Examiner
Office of Petitions

UNITED STATES PATENT AND TRADEMARK OFFICE

Commissioner for Patents
United States Patent and Trademark Office
P.O. Box 1450
Alexandria, VA 22313-1450
www.uspto.gov

Albihns Stockholm AB
Box 5582, Linnegatan 2
SE-114 85 Stockholm, Sweden
Stockholm, Sweden

COPY MAILED

JAN 15 2008

OFFICE OF PETITIONS

In re Application of	:	
Bror Morein et al.	:	
Application No. 10/520,022	:	DECISION ON PETITION
Filed: December 30, 2004	:	TO WITHDRAW
Attorney Docket No. 67185-78227	:	FROM RECORD
	:	

This is a decision on the Request to Withdraw as attorney or agent of record under 37 C.F.R. § 1.36(b), filed August 27, 2007.

The request is **NOT APPROVED** as moot.

A review of the file record indicates that the power of attorney to Albihns Stockholm AB has been revoked by the assignee of the patent application on September 17, 2007. Accordingly, the request to withdraw under 37 C.F.R. § 1.36(b) is moot.

All future communications from the Office will continue to be directed to the below-listed address until otherwise notified by applicant.

Telephone inquires concerning this decision should be directed to Terri Williams at 571-272-2991.

T. Williams

Terri Williams
Petitions Examiner
Office of Petitions

cc: **Cooper & Dunham, LLP**
1185 Avenue of the Americas
New York, NY 10036

UNITED STATES PATENT AND TRADEMARK OFFICE

Commissioner for Patents
United States Patent and Trademark Office
P.O. Box 1450
Alexandria, VA 22313-1450
www.uspto.gov

Olivia Tolan
British American Tobacco
R & D Centre
Patents Department
Regents Park Road, Mailbrook
Southhampton, SO15-8TL

COPY MAILED
SEP 26 2006
OFFICE OF PETITIONS

In re Application of	:	
QVIST	:	
Application No. 10/520,023	:	DECISION ON PETITION
Filed: December 30, 2004	:	TO WITHDRAW
Attorney Docket No. 66876-78247	:	FROM RECORD
	:	

This is a decision on the Request to Withdraw as attorney or agent of record under 37 C.F.R. § 1.36(b), filed June 29, 2006.

The request is **NOT APPROVED**.

A review of the request indicates that Olivia Tolan is no longer associated with Customer Number 26288. Accordingly, the request to withdraw under 37 C.F.R. § 1.36(b) is not applicable.

All future communications from the Office will continue to be directed to the above-listed address until otherwise notified by applicant.

Telephone inquiries concerning this decision should be directed to Patricia Volpe at 571-272-6825.

David Bucci
Petitions Examiner
Office of Petitions

cc: **Albihns Stockholm AB**
Box 5581, Linnegatan 2
SE-114 85 Stockholm; SWEDENn
Stockholm, Sweden

UNITED STATES PATENT AND TRADEMARK OFFICE

Commissioner for Patents
United States Patent and Trademark Office
P.O. Box 1450
Alexandria, VA 22313-1450
www.uspto.gov

July 13, 2009

Diane L. Kilpatrick-Lee
Fina Technology, Inc.
P.O. Box 674412
Houston, TX 77267-4412

Patent No.: 7,514,032 B2
Application No.: 10/520,043
Inventor(s): Eric Maziers, et al.
Issued: April 7, 2009
Title: **POLYMER PROCESSABILITY EVALUATION THROUGH ON-LINE IMAGE PROCESSING**

Re: Request for Certificate of Correction

Consideration has been given your request for the issuance of a certificate of correction for the above-identified patent under the provisions of Rule(s) 1.322 and/or 1.323.

Assignees' names and addresses (assignment data) printed in a patent, are based *solely* on information supplied in the appropriate space for identifying the assignment data, i.e., item 3 of the Issue Fee Transmittal Form PTOL-85B. Granting of a request under 37 CFR 3.81(b) is required to correct applicant's error providing ***incorrect or erroneous*** assignment data, *before* issuance of a Certificate of Correction, under 37 CFR 1.323 *(see Manual of Patent Examining Procedures (M.P.E.P) Chp.1400, sect. 1481).* This procedure is required *at any time after the issue fee is paid*, including after issuance of the patent.

In view of the foregoing, your request, in this matter, is hereby denied.

A request to correct the Assignee under 37 CFR 3.81(b) should include:

A. **the processing fee set forth in 37 CFR 1.117(h) (currently $130);**
B. a statement that the failure to include the correct assignee name on the PTOL-85B was inadvertent; and
C. a copy of the Notice of Recordation of Assignment Document, reflecting the reel and frame number where the assignment(s) is recorded and/or reflecting proof of *the date* the assignment was submitted for recordation.

In the Request, Applicant(s) may request that the file be forwarded to Certificates of Correction Branch, for issuance of a Certificate of Correction, if the Request is granted.

Any request under 37 CFR 3.81(b) should be directed to the following address or facsimile number:

By mail:	Mail Stop PETITIONS Commissioner for Patents Post Office Box 1450 Alexandria, VA 22313-1450
By hand:	Customer Service Window Mail Stop Petitions Randolph Building 401 Dulany Street Alexandria, VA 22314
By fax:	(571) 273-0025 ATTN: Office of Petitions

If a fee (currently $100) was previously submitted for consideration of a Request for Certificate of Correction, under CFR 1.323, to correct assignment data, no additional fee is required.

Virginia Tolbert
For Mary Diggs, Supervisor
Decisions & Certificate of Correction Branch
(703) 756-1591

vt

UNITED STATES PATENT AND TRADEMARK OFFICE

Commissioner for Patents
United States Patent and Trademark Office
P.O. Box 1450
Alexandria, VA 22313-1450
www.uspto.gov

JOSEPH J. LAKS
THOMSON LICENSING LLP
PATENT OPERATIONS
P.O. BOX 5312
PRINCETON, NJ 08543-5312

COPY MAILED

JUN 29 2007

OFFICE OF PETITIONS

In re Application of	:	
Timothy Heighway et al	:	
Application No. 10/520,049	:	ON PETITION
Filed: December 29, 2004	:	
Attorney Docket No. PD020055	:	

This is a decision on the petition filed March 1, 2007 under 37 CFR 1.137(b), to revive the above-identified application.

The petition is **GRANTED.**

The above-identified application became abandoned for failure to submit the Issue fee and Publication fee in a timely manner in reply to the Notice of Allowance mailed October 3, 2006, which set a statutory period for reply of three (3) months. Accordingly, the above-identified application became abandoned on January 4, 2007.

The petition satisfies the conditions for revival pursuant to the provisions of 37 CFR 1.137(b) in that (1) the reply in the form of payment of the Issue fee and Publication fee; (2) the petition fee; and (3) the required statement of unintentional delay have been received. Accordingly, the issue fee is accepted as having been unintentionally delayed.

Telephone inquiries concerning this decision should be directed to the undersigned at (571) 272-3210.

This matter is being referred to the Publishing Division for further processing.

Irvin Dingle
Petitions Examiner
Office of Petitions

01 NOV 2005

#3

UNITED STATES PATENT AND TRADEMARK OFFICE

Commissioner for Patents
United States Patent and Trademark Office
P.O. Box 1450
Alexandria, VA 22313-1450
www.uspto.gov

Tom Hunter
Quine Intellectual Property Law Group
P O Box 458
Alameda CA 94501

In re Application of OLIVE et al. Application No.: 10/520,053 PCT No.: PCT/US03/17181 Int. Filing: 29 May 2003 Priority Date: 29 May 2002 Attorney Docket No.:316T-001810US For: ANTAGONIZING NK-1 RECEPTORS INHIBITS CONSUMPTION OF SUBSTANCES OF ABUSE	DECISION ON PETITION UNDER 37 CFR 1.137(b)

The petition to revive under 37 CFR 1.137(b) filed 27 December 2004 in the above-captioned application is hereby **GRANTED** as follows:

Applicant's statement that the "entire delay in filing the required reply from the due date for the required reply until the filing of a grantable petition under 37 CFR 1.137(b) was unintentional" meets the requirements of 37 CFR 1.137(b)(3).

A review of the application file reveals that the basic national fee of $150 has been provided. The required petition fee of $750 was also paid. Thus, the requirements of 37 CFR 1.137(b) have been satisfied. Therefore, the request to revive the application abandoned under 35 U.S.C. 371(d) is granted as to the National stage in the United States of America.

This application is being forwarded to the United States Designated/Elected Office for further processing including the issuance of a Notification of Missing Requirements indicating that the oath or declaration, in compliance with 37 CFR 1.497(a) and (b), and the surcharge for filing the oath or declaration after the thirty month period, is required.

Cynthia M. Kratz
Attorney Advisor
Office of PCT Legal Administration

Telephone: 571-272-3286
Facsimile: 571-273-0459

UNITED STATES PATENT AND TRADEMARK OFFICE

Commissioner for Patents
United States Patent and Trademark Office
P.O. Box 1450
Alexandria, VA 22313-1450
www.uspto.gov

QUINE INTELLECTUAL PROPERTY
LAW GROUP, P.C.
P O BOX 458
ALAMEDA, CA 94501

COPY MAILED

APR 1 0 2008

OFFICE OF PETITIONS

In re Application of
FOSTER, Olive et al.
Application No. 10/520,053
Filed: February 27, 2006
Attorney Docket No. **316T-001810US**

DECISION ON PETITION
TO WITHDRAW
FROM RECORD

This is a decision on the Request to Withdraw as attorney or agent of record under 37 C.F.R. § 1.36(b), filed December 13, 2007.

The request is **NOT APPROVED** because it is moot.

A review of the file record indicates that the power of attorney to the Beyer Weaver LLP has been revoked by the assignee of the patent application on January 11, 2008. Accordingly, the request to withdraw under 37 C.F.R. § 1.36(b) is moot.

All future communications from the Office will continue to be directed to the below-listed address until otherwise notified by applicant.

Telephone inquires concerning this decision should be directed to the undersigned at 571-272-4231.

Michelle R. Eason
Paralegal Specialist
Office of Petitions

cc: **JONES DAY**
222 EAST 41ST ST
NEW YORK, NY 10017

UNITED STATES PATENT AND TRADEMARK OFFICE

UNITED STATES DEPARTMENT OF COMMERCE
United States Patent and Trademark Office
Address: COMMISSIONER FOR PATENTS
P.O. Box 1450
Alexandria, Virginia 22313-1450
www.uspto.gov

Huntsman corporation
Legal Department
10003 woodlock Forest Drive
The Woodlands, TX 77380

Mail Date: 04/21/2010

Applicant	: Mohamed Mekkaoui Alaoui	: DECISION ON REQUEST FOR
Patent Number	: 7579399	: RECALCULATION of PATENT
Issue Date	: 08/25/2009	: TERM ADJUSTMENT IN VIEW
Appliction No	: 10/520,055	: OF WYETH AND NOTICE OF INTENT TO
Filed	: 07/25/2005	: ISSUE CERTIFICATE OF CORRECTION
		:

The Request for Recalculation is **GRANTED** to the extent indicated.

The patent term adjustment has been determined to be **870** days. The USPTO will *sua sponte* issue a certificate of correction reflecting the amount of PTA days determined by the recalculation.

Prior to the issuance of the certificate of correction, the USPTO will afford patentee an opportunity to be heard and request reconsideration. Accordingly, patentee has **one month or thirty (30) days**, whichever is longer, to file a request for reconsideration of this patent term adjustment calculation. See 35 U.S.C. 154(b)(3)(B)(ii) and 37 CFR 1.322(a)(4). No extensions of time will be granted under 37 CFR 1.136.

Patentee should use document code PET.OP if electronically filing a request for reconsideration of this patent term adjustment calculation. The patentee must also include the information required by 37 CFR 1.705(b)(2) and the fee required by 37 CFR 1.18(e). If patentee does not file a timely request for reconsideration of this patent term adjustment calculation including the information required by 37 CFR 1.705(b)(2) and the fee required by 37 CFR 1.18(e), the USPTO will issue a certificate of correction reflecting the PTA determination noted above.

Patentee should be aware that in order to preserve the right to review in the United States District Court for the District of Columbia of the USPTO patent term adjustment determination, patentee must ensure that he or she also take the steps required under 35 U.S.C. 154(b)(4)(A) in a timely manner. Nothing in the request for recalculation should be construed as providing an alternative time frame for commencing a civil action under 35 U.S.C. 154(b)(4)(A).

Any questions concerning this decision should be directed to the Office of Patent Legal Administration at 571-272-7702.

UNITED STATES PATENT AND TRADEMARK OFFICE

Commissioner for Patents
United States Patent and Trademark Office
P.O. Box 1450
Alexandria, VA 22313-1450
www.uspto.gov

APPLICATION NUMBER	FILING/RECEIPT DATE	FIRST NAMED APPLICANT	ATTORNEY DOCKET NUMBER
10/520,062	01/05/2005	Yoshiaki Fukuaga	2936-0235PUS1

BIRCH STEWART KOLASCH & BIRCH
PO BOX 747
FALLS CHURCH VA 22040-0747

DATE MAILED: July 10, 2007

DECISION DISMISSING PETITION UNDER 37 CFR 1.138(d)
The declaration of express abandonment will not be recognized

This is in response to the petition under 37 CFR 1.138(d) filed on June 27, 2007, requesting for a refund of any previously paid search fee and excess claims fee in the above-identified application.

The petition is dismissed.

The express abandonment will **not** be recognized for the reason(s) indicated below:

- ☐ The petition was not filed in sufficient time to permit the appropriate officials to recognize the abandonment before an examination has been made of the application. See 37 CFR 1.138(d).
- ☑ The application is not an application filed under 35 U.S.C. 111(a) on or after December 8, 2004.
- ☐ The petition was not signed by a party authorized by 37 CFR 1.33(b)(1), (3) or (4).
- ☐ The petition for express abandonment under 1.138(d) is dismissed because the applicant did not pay any search fee and excess claims fees in the above-identified application.

Any inquiries concerning this decision should be directed to the Pre-Grant Publication Division at (703) 305-4283.

Barbara J. Debnam
Pre-Grant Publication Division

14 JUL 2005

UNITED STATES PATENT AND TRADEMARK OFFICE

COMMISSIONER FOR PATENTS
UNITED STATES PATENT AND TRADEMARK OFFICE
P.O. BOX 1450
ALEXANDRIA, VA 22313-1450
www.uspto.gov

Eric Jensen
Young & Thompson
745 South 23rd Street
Arlington, VA 22202

In re Application of	:	
MALECAZE, Francois	:	
Application No.: 10/520,072	:	DECISION ON PETITION
PCT No.: PCT/FR03/02021	:	UNDER 37 CFR 1.137(b)
Int. Filing Date: 30 June 2003	:	
Priority Date: 03 July 2002	:	
Attorney Docket No.: 0579-1081	:	
For: ACCOMMODATIVE INTRAOCULAR LENS	:	

The petition to revive under 37 CFR 1.137(b) filed 05 January 2005 in the above-captioned application is hereby **GRANTED** as follows:

Applicant's statement that "the entire delay in filing the required reply from the due date for the reply until the filing of a grantable petition under 37 CFR 1.137(b) was unintentional" meets the requirements of 37 CFR 1.137(b)(3).

A review of the application file reveals that applicant has submitted the basic national fee and the requirements of 37 CFR 1.137(b) have been satisfied. Therefore, the request to revive the application abandoned under 35 U.S.C. 371(d) is granted as to the National stage in the United States of America.

This application is being forwarded to the United States Designated/Elected Office (US/DO/EO) for continued processing including the issuance of a Notification of Missing Requirements (Form PCT/DO/EO/905) indicating that an oath or declaration along with the $130 surcharge for filing the oath or declaration after the thirty-month period is required.

Anthony Smith
Attorney-Advisor
Office of PCT Legal Administration
Telephone: 571-272-3298
Fax: 571-273-0459

UNITED STATES PATENT AND TRADEMARK OFFICE

UNITED STATES DEPARTMENT OF COMMERCE
United States Patent and Trademark Office
Address: COMMISSIONER FOR PATENTS
P.O. Box 1450
Alexandria, Virginia 22313-1450
www.uspto.gov

NIXON & VANDERHYE, PC
901 NORTH GLEBE ROAD, 11TH FLOOR
ARLINGTON, VA 22203

Mail Date: 04/21/2010

Applicant	: Jamila Najib	: DECISION ON REQUEST FOR
Patent Number	: 7632870	: RECALCULATION of PATENT
Issue Date	: 12/15/2009	: TERM ADJUSTMENT IN VIEW
Appliction No	: 10/520,078	: OF WYETH AND NOTICE OF INTENT TO
Filed	: 04/04/2005	: ISSUE CERTIFICATE OF CORRECTION
		:

The Request for Recalculation is **GRANTED** to the extent indicated.

The patent term adjustment has been determined to be **1251** days. The USPTO will *sua sponte* issue a certificate of correction reflecting the amount of PTA days determined by the recalculation.

Prior to the issuance of the certificate of correction, the USPTO will afford patentee an opportunity to be heard and request reconsideration. Accordingly, patentee has **one month or thirty (30) days**, whichever is longer, to file a request for reconsideration of this patent term adjustment calculation. See 35 U.S.C. 154(b)(3)(B)(ii) and 37 CFR 1.322(a)(4). No extensions of time will be granted under 37 CFR 1.136.

Patentee should use document code PET.OP if electronically filing a request for reconsideration of this patent term adjustment calculation. The patentee must also include the information required by 37 CFR 1.705(b)(2) and the fee required by 37 CFR 1.18(e). If patentee does not file a timely request for reconsideration of this patent term adjustment calculation including the information required by 37 CFR 1.705(b)(2) and the fee required by 37 CFR 1.18(e), the USPTO will issue a certificate of correction reflecting the PTA determination noted above.

Patentee should be aware that in order to preserve the right to review in the United States District Court for the District of Columbia of the USPTO patent term adjustment determination, patentee must ensure that he or she also take the steps required under 35 U.S.C. 154(b)(4)(A) in a timely manner. Nothing in the request for recalculation should be construed as providing an alternative time frame for commencing a civil action under 35 U.S.C. 154(b)(4)(A).

Any questions concerning this decision should be directed to the Office of Patent Legal Administration at 571-272-7702.

04 AUG 2005

UNITED STATES PATENT AND TRADEMARK OFFICE

COMMISSIONER FOR PATENTS
UNITED STATES PATENT AND TRADEMARK OFFICE
P.O. BOX 1450
ALEXANDRIA, VA 22313-1450
www.uspto.gov

Daniel F. Nesbitt
HASSE & NESBITT LLC
7550 Central Park Blvd
Mason, OH 45040

In re Application of LE PENDU, et al. Application No.: 10/520,087 PCT No.: PCT/US03/17247 Int. Filing Date: 02 June 2003 Priority Date: 31 May 2002 Atty. Docket No.: CHM-007M For: METHODS, COMPOSITIONS AND KIT FOR ANTIGENIC BINDING OR NORWALK-LIKE VIRUSES	DECISION ON PETITION UNDER 37 CFR 1.137(b)

The petition to revive under 37 CFR 1.137(b) filed 28 December 2004 in the above-captioned application is hereby **GRANTED** as follows:

Applicant's statement that "the entire delay in filing the required papers from the due date for the action until the filing of a grantable petition pursuant to this paragraph (37 CFR 1.137(b)) was unintentional" and the prompt filing of the petition satisfies the requirement of 37 CFR 1.137(b)(3).

A review of the application file reveals that applicant has now provided payment of the full, U.S. Basic National Fee. Therefore, the request to revive the application abandoned under 35 U.S.C. 371(d) is granted as to the National stage in the United States of America. Further, a review of the application file reveals that all of the requirements of 35 U.S.C. 371 for entry into the national stage in the United States have been satisfied.

The application has an international filing date of 02 June 2003 under 35 U.S.C. 363 and will be given a date of **28 December 2004** under 35 U.S.C. 371(c)(1), (c)(2) and (c)(4).

This application is being returned to the United States Designated/Elected Office (DO/EO/US) for treatment in accordance with this decision.

Derek A. Putonen
Attorney Advisor
Office of PCT Legal Administration
Tel: (571) 272-3294
Fax: (571) 273-0459

SPE RESPONSE FOR CERTIFICATE OF CORRECTION

DATE : 8-3-07

Paper No.: _____

TO SPE OF : ART UNIT 1722

SUBJECT : Request for Certificate of Correction for Appl. No. 7204881 B2 (10/530099

Please respond to this request for a certificate of correction within 7 days.

Please review the requested changes/corrections as shown in the **COCIN** document(s) in the IFW application image. No new matter should be introduced, nor should the scope or meaning of the claims be changed.

Please complete the response (see below) and forward the completed response to scanning using document code **COCX**.

Need response A/S/A/P

Thanks E M James

Certificates of Correction Branch

703-308-9390 ext. 116

Thank You For Your Assistance

The request for issuing the above-identified correction(s) is hereby:

Note your decision on the appropriate box.

- ☑ **Approved** — **All** changes apply.
- ☐ **Approved in Part** — Specify below which changes **do not** apply.
- ☐ **Denied** — State the reasons for denial below.

Comments: _____

MICHAEL BARR
SUPERVISORY PATENT EXAMINER

SPE

1792
Art Unit

UNITED STATES PATENT AND TRADEMARK OFFICE

Commissioner for Patents
United States Patent and Trademark Office
P.O. Box 1450
Alexandria, VA 22313-1450
www.uspto.gov

TIMOTHY H. VAN DYKE
390 NORTH ORANGE AVE
SUITE 2500
ORLANDO FL32801

COPY MAILED

JUL 30 2009

OFFICE OF PETITIONS

In re Application of	:	
Henry Daniell	:	
Application No. 10/520,104	:	DECISION ON PETITION
Filed: January 23, 2006	:	
Attorney Docket No. 10669-040	:	

This is a decision on the petition under the unintentional provisions of 37 CFR 1.137(b), filed June 24, 2009, to revive the above-identified application.

The petition is **GRANTED**.

The application became abandoned for failure to reply in a timely manner to the non-final rejection, mailed October 24, 2008, which set a shortened statutory period for reply of three (3) months. No extension of time under the provisions of 27 CFR 1.136(a) were obtained. Accordingly, the application became abandoned on January 25, 2009.

The petition satisfies the requirements of 37 CFR 1.137(b) in that petitioner has supplied (1) the reply in the form of an amendment, (2) the petition fee of $810, and (3) a proper statement of unintentional delay.

Telephone inquiries concerning this decision should be directed to Newton Edwards at (571) 272-6052 or in his absence to the undersigned at 571-272-7099.

This application is being referred to Technology Center AU 1638 for appropriate action by the Examiner in the normal course of Business to the reply received.

David Bucci
Petitions Examiner
Office of Petitions

UNITED STATES PATENT AND TRADEMARK OFFICE

Commissioner for Patents
United States Patent and Trademark Office
P.O. Box 1450
Alexandria, VA 22313-1450
www.uspto.gov

05 MAY 2010

Timothy H. Van Dyke
390 No. Orange Avenue
Suite 2500
Orlando FL 32801

In re Application of: DANIELL, Henry	:	
U.S. Application No.: 10/520,104	:	DECISION ON PETITION
PCT Application No.: PCT/US03/20869	:	UNDER 37 CFR 1.78(a)(3) AND
International Filing Date: 02 July 2003	:	37 CFR (a)(6)
Priority Date: 03 July 2002	:	
Atty Docket No.: 10669-040	:	
For: EXPRESION OF HUMAN	:	
INTERFERON IN TRANSGENIC	:	
CHLOROPLASTS	:	

This is a decision on the "Petition For Unintentionally Delayed Entry Of A Priority Claim" filed 15 December 2009, treated herein under 37 CFR 1.78(a)(3) and (a)(6). Applicants have paid the required petition fee.

The petition is **DISMISSED** without prejudice.

37 CFR 1.78(a)(3) applies where an applicant seeks to add a delayed claim of benefit under 35 U.S.C. 120 and 365(c) to a prior-filed international application designating the United States or a prior-filed U.S. non-provisional application; 37 CFR 1.78(a)(6) applies where an applicant seeks to add a delayed claim of priority to a prior-filed provisional application. Applicant here is seeking to add priority claims to the prior-filed international application (PCT/US01/06288), U.S. non-provisional applications (09/807,742 and 09/079,640), and U.S. provisional applications (60/185,987, 60/263,473, and 60/263,688) identified in the amendment filed on 07 December 2009. Accordingly, the present petition is properly considered under both 37 CFR 1.78(a)(3) and (a)(6).

A petition for acceptance of a claim for late priority under 37 CFR 1.78(a)(3) and 1.78(a)(6) is only applicable to those applications filed on or after November 29, 2000. Further, the petition is appropriate only after the expiration of the period specified in 37 CFR 1.78(a)(2)(ii) and 1.78(a)(5)(ii). The present non-provisional application was filed after November 29, 2000, and the claim herein for the benefit of priority to the prior-filed applications is submitted after expiration of the periods specified in 37 CFR 1.78(a)(2)(ii) and 1.78(a)(5)(ii). Therefore, this is a proper petition under 37 CFR 1.78(a)(3) and 1.78(a)(6).

A petition under 37 CFR 1.78(a)(3) and 1.78(a)(6) must be accompanied by the following:

(1) the reference required by 35 U.S.C. 120 and 119(e) and 37 CFR §§ 1.78(a)(2)(i) and 1.78(a)(5)(i) of the prior-filed application, unless previously submitted;
(2) the surcharge set forth in § 1.17(t); and
(3) a statement that the entire delay between the date the claim was due under 37 CFR 1.78(a)(2)(ii) and 1.78(a)(5)(ii) and the date the claim was filed was unintentional. The Commissioner may require additional where there is a question whether the delay was unintentional.

The present petition fails to satisfy requirement (1).

Specifically, the priority reference contained in the amendment filed 07 December 2009 misidentifies one of the provisional applications for which priority is requested. More specifically, the amendment seeks to add a benefit claim to U.S. provisional application 60/263,688, an application purportedly filed on 23 January 2001 and to which PCT/US01/06288 purportedly claims priority. However, U.S. application 60/263,688 was not filed on 23 January 2001, does not include an inventor in common with the present application, and was not claimed as a priority application in PCT/US01/06288 (it appears that petitioner may have intended to add a claim directed to U.S. provisional application 60/263,668, which was claimed as a priority application in PCT/US01/06288, was filed on 23 January 2001, and names the same inventor as the present application). In view of the inclusion of an incorrect benefit claim, the amendment filed 07 December 2009 is not acceptable in satisfaction of the "reference" requirement of a grantable petition under 37 CFR 1.78(a).

Before the petition under 37 CFR 1.78(a)(3) and (a)(6) can be granted, a renewed petition accompanied by a substitute amendment[1] is required. As discussed above, the substitute amendment must include a revised reference correcting the error in the present amendment with respect to the claim directed to prior-filed provisional application 60/263,688.

Further correspondence with respect to this matter should be addressed as follows:

By mail: Mail Stop PCT Legal Administration
Commissioner for Patents
Post Office Box 1450
Alexandria, VA 22313-1450

[1] *Note* 37 CFR 1.121

By hand: Customer Service Window
Mail Stop PCT Legal Administration
Randolph Building
401 Dulany Street
Alexandria, VA 22314

By fax: (571) 273-8300
ATTN: Office of PCT Legal Administration

Electronically: Via EFS-Web

Any questions concerning this matter may be directed to Richard M. Ross at (571) 272-3296.

Boris Milef
Legal Examiner
Office of Petitions and PCT Legal Administration

UNITED STATES PATENT AND TRADEMARK OFFICE

COMMISSIONER FOR PATENTS
UNITED STATES PATENT AND TRADEMARK OFFICE
P.O. BOX 1450
ALEXANDRIA, VA 22313-1450
www.uspto.gov

25 JUN 2010

Timothy H. Van Dyke
390 No. Orange Avenue
Suite 2500
Orlando FL 32801

In re Application of: DANIELL, Henry	:	
U.S. Application No.: 10/520,104	:	DECISION ON RENEWED
PCT Application No.: PCT/US03/20869	:	PETITION UNDER 37 CFR
International Filing Date: 02 July 2003	:	1.78(a)(3) AND (a)(6)
Priority Date: 03 July 2002	:	
Attorney Docket No.: 10669-040	:	
For: EXPRESION OF HUMAN	:	
INTERFERON IN TRANSGENIC	:	
CHLOROPLASTS	:	

In a decision mailed herein on 05 May 2010, applicant's original petition under 37 CFR 1.78(a)(3) and (a)(6) was dismissed for failure to satisfy all the requirements of a grantable petition. Specifically, the amendment filed with the original petition included an incorrect reference with respect to one of the provisional applications to which priority was claimed.

On 09 June 2010, applicant filed the "Renewed Petition For Unintentionally Delayed Entry Of A Priority Claim" considered herein. The renewed petition was accompanied by a supplemental amendment to the first paragraph of the specification that corrects the error in the previous amendment and includes acceptable references with respect to all the prior-filed applications for which applicant is seeking to add delayed benefit claims (i.e., PCT/US01/06288, U.S. non-provisional applications 09/807,742 and 09/079,640, and U.S. provisional applications 60/185,987, 60/263,473, and 60/263,668). The supplemental amendment satisfies the final outstanding requirement for a grantable petition under 37 CFR 1.78(a)(3) and (a)(6).

Based on the above, the renewed petition is appropriately **GRANTED**

The granting of the petition to accept the delayed benefit claim to the prior-filed applications under 37 CFR 1.78(a)(3) and (a)(6) should <u>not</u> be construed as meaning that this application is entitled to the benefit of the filing date of the prior-filed applications. In order for this application to be entitled to the benefit of the prior-filed application, all other requirements under 35 U.S.C. 120 and 119(e) and 37 CFR 1.78(a)(1), (a)(2), (a)(5), and (a)(6) must be met. Similarly, the fact that the Filing Receipt accompanying this decision on petition will include the prior-filed applications should not be construed as meaning that applicant is entitled to the claim for benefit of priority to the prior filed applications noted thereon. Accordingly, the examiner will, in due course, consider this benefit claim and determine whether this application is entitled to the benefit of the earlier filing date.

A corrected Filing Receipt, which includes the priority claims to the prior-filed international, non-provisional, and provisional applications, accompanies this decision on petition.

Any questions concerning this decision may be directed to Richard M. Ross at (571) 272-3296. All other inquiries concerning either the examination procedures or status of the application should be directed to the Technology Center.

This matter is being referred to Technology Center Art Unit 1638 for further examination and for appropriate consideration by the examiner of applicant's entitlement to claim benefit of priority under 35 U.S.C. 120 and 119(e) to the prior-filed international and provisional applications.

Boris Milef
Senior Legal Examiner
Office Of PCT Legal Administration

ATTACHMENT: Corrected Filing Receipt

2 1 MAY 2009

United States Patent and Trademark Office

Commissioner for Patents
United States Patent and Trademark Office
P.O. Box 1450
Alexandria, VA 22313-1450
www.uspto.gov

BIRCH STEWART KOLASCH & BIRCH
PO BOX 747
FALLS CHURCH VA 22040-0747

In re Application of	:	
Sode	:	
Application No.: 10/520,126	:	
PCT No.: PCT/JP03/08418	:	
Int. Filing Date: 02 July 2003	:	DECISION
Priority Date: 04 July 2002	:	
Attorney Docket No.: 3691-0114PUS1	:	
For: Glucose Dehydrogenase	:	

This is in response to the "Request For Corrected Notification of Acceptance" filed on 10 November 2008.

BACKGROUND

This international application was filed on 02 July 2003, claimed an earliest priority date of 04 July 2002, and designated the U.S. The International Bureau transmitted a copy of the published international application to the USPTO on 15 January 2004. The 30 month time period for paying the basic national fee in the United States expired at midnight on 04 January 2005. Applicant filed *inter alia* the basic national fee on 03 January 2005.

On 01 August 2005, a Notification of Missing Requirements (Form PCT/DO/EO/905) was mailed to applicant, requiring additional fees as well as an oath or declaration compliant with 37 CFR 1.497(a) and (b).

On 03 October 2005, applicant filed a response, including a declaration.

On 12 April 2006 and 01 August 2006, Notices of Acceptance (Form PCT/DO/EO/903) were mailed to applicant, indicating a date under 35 U.S.C. 371(c)(1), (2) and (4) of "10/04/2005."

DISCUSSION

Petitioner argues that the correct date of this application under 35 U.S.C. 371(c)(1), (2) and (4) is 03 October 2005, rather than 04 October 2005 as indicated on the Notices of Acceptance (Forms PCT/DO/EO/903). Petitioner cites postcard evidence in support of this position. A review of the application file reveals that the correspondence in question was date stamped as received by the USPTO on 03 October 2005. Therefore, the Forms PCT/DO/EO/903 mailed on 12 April 2006 and 01 August 2006 were issued in error, and they are hereby **VACATED**.

DECISION

The request is **GRANTED**.

This application is being returned to the Office of Patent Application Processing for continued processing, including the preparation and mailing of a corrected Filing Receipt and a corrected Notice of Acceptance (Form PCT/DO/EO/903). The date of this application under 35 U.S.C. 371(c)(1), (2) and (4) is **03 October 2005**.

/George Dombroske/
George Dombroske
PCT Legal Examiner
Office of PCT Legal Administration
Tel: (571) 272-3283
Fax: (571) 273-0459

09 AUG 2006

UNITED STATES PATENT AND TRADEMARK OFFICE

COMMISSIONER FOR PATENTS
UNITED STATES PATENT AND TRADEMARK OFFICE
P.O. BOX 1450
ALEXANDRIA, VA 22313-1450
www.uspto.gov

Thomas Champagne
IP STRATEGIES
12 ½ WALL STREET, SUITE I
ASHEVILLE, NC 28801

In re Application of: MULLER, et al	:	
Application No.: 10/520,129	:	
PCT Application No.: PCT/EP03/05196	:	DECISION ON
Int. Filing Date: 16 May 2003	:	PETITION UNDER
Priority Date Claimed: 01 July 2002	:	37 CFR 1.137(b)
Attorney Docket No.: GRUNP44	:	
For: Regulation of the Water Balance in Fuel Cell	:	
Systems	:	
	:	

This decision is a response to Applicants' "Petition for Revival of an International Application for Patent Designating the U.S. Abandoned Unintentionally Under 37 CFR 1.137(b)", which was filed on 11 July 2006 in the United States Patent and Trademark Office (USPTO).

BACKGROUND

On 16 May 2003, Applicant filed international application PCT/EP03/05196. The international application claims a priority date of 01 July 2002 and designates the United States. Pursuant to 35 U.S.C. 371 and 37 CFR 1.495, the thirty-month period for commencement of the national stage in the United States, and paying the required basic national fee, expired at midnight on 03 January 2005 (01 January 2005 being a Holiday and falling on a Saturday).

On 31 December 2004, Applicant filed a transmittal letter for entry into the national stage in the United States, which was accompanied by, *inter alia*, a request for immediate examination, and the requisite basic national fee as required by 35 U.S.C. 371 (c)(1). However, no executed declaration or oath was provided at such time.

On 27 July 2005, Applicant was mailed a "NOTIFICATION OF MISSING REQUIREMENTS UNDER 35 U.S.C. 371" (Form PCT/DO/EO/905) advising Applicant of the need to provide an executed oath or declaration of the inventors, in compliance with 37 CFR 1.66 or 37 CFR 1.68, identifying the application by the international application number and international filing date. Applicant was afforded two months to file the proper reply and advised that this time could be extended with a petition and payment of the appropriate extension of time fee.

One 12 June 2006, Applicant was mailed a "NOTIFICATION OF ABANDONMENT" (Form PCT/DO/EO/909) informing Applicant that the instant application failed to meet the requirements of 35 U.S.C. 371 and 37 CFR 1.495.

On 11 July 2006, Applicant filed the instant petition to revive accompanied by, *inter alia*, the $1,500 petition fee.

DISCUSSION

A petition to revive an abandoned application under 37 CFR 1.137(b) must be filed without intentional delay from the time the application became abandoned and/or applicant first became aware of the abandoned status of the application. A petition under 37 CFR 1.137(b) must be accompanied by (1) the required reply, (2) the petition as set forth in 37 CFR 1.17(m), (3) a statement that the entire delay in filing the required reply from the due date for the reply until the filing of a grantable petition was unintentional, and (4) a terminal disclaimer and fee (if the international application was filed prior to June 8, 1995).

With regard to Item (1), the required reply, i.e. an executed declaration in compliance with 37 CFR 1.66 or 37 CFR 1.68, in response to the "Notification of Missing Requirements", has been received.

With regard to Item (2), the appropriate petition fee of $1,500 as required by 37 CFR 1.17(m) has been paid.

With regard to Item (3), Applicant's statement that "[t]he entire delay in filing the required reply from the due date for the required reply until the filing of a grantable petition under 37 CFR 1.137(b) was unintentional" has been satisfied.

With regard to Item (4), a terminal disclaimer is not required since this application was filed after 08 June 1995.

CONCLUSION

All of the requirements of 37 CFR 1.137(b) have been met and Applicant's petition to revive is **GRANTED**.

The application is being forwarded to the National Stage Processing Division of the Office of PCT Operations for continued processing in accordance with this decision. Additionally, Deposit Account No. 501998 will be charged a $130 surcharge for filing the oath or declaration after the thirty-month period.

Dionne W. Mayes
PCT Legal Administration Detailee
Telephone: 571-272-6094
Facsimile: 571-273-0459

Leonard Smith
Supervisory Legal Examiner
Office of PCT Legal Administration

UNITED STATES PATENT AND TRADEMARK OFFICE

Commissioner for Patents
United States Patent and Trademark Office
P.O. Box 1450
Alexandria, VA 22313-1450
www.uspto.gov

KEOWN & ZUCCHERO, LLP
500 WEST CUMMINGS PARK
SUITE 1200
WOBURN MA 01801

COPY MAILED

DEC 1 5 2008

OFFICE OF PETITIONS

In re Application of :
Roninson, et al. :
Application No.: 10/520,142 : DECISION
Filing Date: 18 August, 2005 :
Attorney Docket No. 99,216-KK6 :

This is a decision on the petition filed on 22 September, 2008, and properly considered as a petition requesting withdrawal of the holding of abandonment under 37 C.F.R. §1.181.

The petition to withdraw the holding of abandonment under 37 C.F.R. §1.181 is **GRANTED**.

As to the Request to Withdraw
the Holding of Abandonment

Petitioners always are directed to the Commentary at MPEP §711.03(c)(I) for guidance as to the proper showing and timeliness requirements for relief under 37 C.F.R. §1.181.

BACKGROUND

The record reflects that:

Petitioner failed to reply timely and properly to the Requirement for Restriction mailed on 10 January, 2008, with reply due absent extension of time on or before 10 February, 2008.

The application went abandoned after midnight 10 February, 2008.

The Office mailed a Notice of Abandonment on 5 September, 2008.

On 22 September, 2008, Petitioner filed a petition seeking withdrawal of the holding of abandonment under the provisions of 37 C.F.R. §1.181, and averred, *inter alia*, non-receipt due to the Office error of mailing the Office action to an incorrect address—that of former Counsel rather than to present Counsel/Petitioner, the latter of whom filed a Revocation/Power of Attorne with a certificate pursuant to 37 C.F.R. §3.73(b) on 25 September, 2006, which was

acknowledged as accepted by the Office on 25 October, 2006, but apparently not entered. While Petitioner acknowledged having received the Notice of Abandonment from prior Counsel, Petitioner was silent as to receipt/nonreceipt of the Office action/Restriction (a copy of which is enclosed herewith) from prior Counsel, and did not submit a reply thereto.

Thus, Petitioner appears to have satisfied the showing requirements under the rule as set forth at MPEP §711.03(c)(I).

The availability of applications and application papers online to applicants/practitioners who diligently associate their Customer Number with the respective application(s) now provides an applicant/practitioner on-demand information as to events/transactions in an application. Thus, now if one wishes to know the progress in and/or status of an application or the accuracy of the data therein, one need only look at the file online.

Out of an abundance of caution, Petitioners always are reminded that those registered to practice *and* all others who make representations before the Office must inquire into the underlying facts of representations made to the Office and support averments with the appropriate documentation–since all owe to the Office the continuing duty to disclose.[1]

STATUTES, REGULATIONS

Congress has authorized the Commissioner to "revive an application if the delay is shown to the satisfaction of the Commissioner to have been "unavoidable." 35 U.S.C. §133 (1994). And the regulations at 37 C.F.R. §1.137(a) and (b) set forth the requirements for a Petitioner to revive a previously unavoidably or unintentionally, respectively, abandoned application.[2],[3]

Moreover, the Office has set forth in the Commentary at MPEP §711.03(c)(I) the showing and timeliness requirements for a proper showing for relief under 37 C.F.R. §1.181 in these matters.

---

[1] See supplement of 17 June, 1999. The Patent and Trademark Office is relying on petitioner's duty of candor and good faith and accepting a statement made by Petitioner. See Changes to Patent Practice and Procedure, 62 Fed. Reg. at 53160 and 53178, 1203 Off. Gaz. Pat. Office at 88 and 103 (responses to comments 64 and 109)(applicant obligated under 37 C.F.R. §10.18 to inquire into the underlying facts and circumstances when providing statements to the Patent and Trademark Office). See specifically, the regulations at 37 C.F.R. §10.18.

[2] See: Changes to Patent Practice and Procedure; Final Rule Notice, 62 Fed. Reg. at 53158-59 (October 10, 1997), 1203 Off. Gaz. Pat. Office at 86-87 (October 21, 1997).

[3] The language of 35 U.S.C. §133 and 37 C.F.R. §1.137(a) is clear, unambiguous, and without qualification: the delay in tendering the reply to the outstanding Office action, as well as filing the first petition seeking revival, must have been unavoidable for the reply now to be accepted on petition. (Therefore, by example, an unavoidable delay in the payment of the Filing Fee might occur if a reply is shipped by the US Postal Service, but due to catastrophic accident, the delivery is not made.) Delays in responding properly raise the question whether delays are unavoidable. Where there is a question whether the delay was unavoidable, Petitioners must meet the burden of establishing that the delay was unavoidable within the meaning of 35 U.S.C. §133 and 37 C.F.R. §1.137(a) And the Petitioner must be diligent in attending to the matter. Failure to do so does not constitute the care required under Pratt, and so cannot satisfy the test for diligence and due care. (By contrast, unintentional delays are those that do not satisfy the very strict statutory and regulatory requirements of unavoidable delay, and also, by definition, are not intentional.))

Allegations as to the Request to
Withdraw the Holding of Abandonment

The record evidences a satisfactory presentation of the showing requirements under the Rule.

CONCLUSION

The petition as considered under 37 C.F.R. §1.181 is **granted**, and the 5 September, 2008, Notice of Abandonment is **vacated**.

The instant application is released to Technology Center/AU (TC/AU) 1642 for further processing in due course—including the remailing of the 10 January, 2008, Office action.

Petitioner may find it beneficial to view Private PAIR within a fortnight of the instant decision to ensure that the revival has been acknowledged by the TC/AU in response to this decision. It is noted that all inquiries with regard to that change in status need be directed to the TC/AU where that change of status must be effected—that does not occur in the Office of Petitions.

Telephone inquiries regarding this decision may be directed to the undersigned at (571) 272-3214—it is noted, however, that all practice before the Office is in writing (see: 37 C.F.R. §1.2[4]) and the proper authority for action on any matter in this regard are the statutes (35 U.S.C.), regulations (37 C.F.R.) and the commentary on policy (MPEP). Therefore, no telephone discussion may be controlling or considered authority for Petitioner's action(s).

/John J. Gillon, Jr./
John J. Gillon, Jr.
Senior Attorney
Office of Petitions

[4] The regulations at 37 C.F.R. §1.2 provide:
§1.2 Business to be transacted in writing.
All business with the Patent and Trademark Office should be transacted in writing. The personal attendance of applicants or their attorneys or agents at the Patent and Trademark Office is unnecessary. The action of the Patent and Trademark Office will be based exclusively on the written record in the Office. No attention will be paid to any alleged oral promise, stipulation, or understanding in relation to which there is disagreement or doubt.

UNITED STATES PATENT AND TRADEMARK OFFICE

UNITED STATES DEPARTMENT OF COMMERCE
United States Patent and Trademark Office
Address: COMMISSIONER FOR PATENTS
P.O. Box 1450
Alexandria, Virginia 22313-1450
www.uspto.gov

APPLICATION NO.	FILING DATE	FIRST NAMED INVENTOR	ATTORNEY DOCKET NO.	CONFIRMATION NO.
10/520,142	08/18/2005	Igor B. Roninson	99,216-KK6	5577

20306 7590 01/10/2008
MCDONNELL BOEHNEN HULBERT & BERGHOFF LLP
300 S. WACKER DRIVE
32ND FLOOR
CHICAGO, IL 60606

EXAMINER
GODDARD, LAURA B

ART UNIT	PAPER NUMBER
1642	

MAIL DATE	DELIVERY MODE
01/10/2008	PAPER

Please find below and/or attached an Office communication concerning this application or proceeding.

The time period for reply, if any, is set in the attached communication.

Office Action Summary	Application No.	Applicant(s)	
	10/520,142	RONINSON ET AL.	
	Examiner	Art Unit	
	Laura B. Goddard, Ph.D.	1642	

-- The MAILING DATE of this communication appears on the cover sheet with the correspondence address --

Period for Reply

A SHORTENED STATUTORY PERIOD FOR REPLY IS SET TO EXPIRE 1 MONTH(S) OR THIRTY (30) DAYS, WHICHEVER IS LONGER, FROM THE MAILING DATE OF THIS COMMUNICATION.

- Extensions of time may be available under the provisions of 37 CFR 1.136(a). In no event, however, may a reply be timely filed after SIX (6) MONTHS from the mailing date of this communication.
- If NO period for reply is specified above, the maximum statutory period will apply and will expire SIX (6) MONTHS from the mailing date of this communication.
- Failure to reply within the set or extended period for reply will, by statute, cause the application to become ABANDONED (35 U.S.C. § 133). Any reply received by the Office later than three months after the mailing date of this communication, even if timely filed, may reduce any earned patent term adjustment. See 37 CFR 1.704(b).

Status

1)☒ Responsive to communication(s) filed on *03 January 2005*.

2a)☐ This action is **FINAL**. 2b)☒ This action is non-final.

3)☐ Since this application is in condition for allowance except for formal matters, prosecution as to the merits is closed in accordance with the practice under *Ex parte Quayle*, 1935 C.D. 11, 453 O.G. 213.

Disposition of Claims

4)☒ Claim(s) *See Continuation Sheet* is/are pending in the application.

4a) Of the above claim(s) *50* is/are withdrawn from consideration.

5)☐ Claim(s) _____ is/are allowed.

6)☐ Claim(s) _____ is/are rejected.

7)☐ Claim(s) _____ is/are objected to.

8)☒ Claim(s) *1,2,4,7-10,13,14,16,19-23,26,27,29-31,34,35,37-39,42,43,45,48,49,51,52,55,56,58,61-65,68,69,71-73,76,77,79-81,86-92,97-99,102,104 and 108-111* are subject to restriction and/or election requirement.

Application Papers

9)☐ The specification is objected to by the Examiner.

10)☐ The drawing(s) filed on _____ is/are: a)☐ accepted or b)☐ objected to by the Examiner.

Applicant may not request that any objection to the drawing(s) be held in abeyance. See 37 CFR 1.85(a).

Replacement drawing sheet(s) including the correction is required if the drawing(s) is objected to. See 37 CFR 1.121(d).

11)☐ The oath or declaration is objected to by the Examiner. Note the attached Office Action or form PTO-152.

Priority under 35 U.S.C. § 119

12)☐ Acknowledgment is made of a claim for foreign priority under 35 U.S.C. § 119(a)-(d) or (f).

a)☐ All b)☐ Some * c)☐ None of:

1.☐ Certified copies of the priority documents have been received.

2.☐ Certified copies of the priority documents have been received in Application No. _____.

3.☐ Copies of the certified copies of the priority documents have been received in this National Stage application from the International Bureau (PCT Rule 17.2(a)).

* See the attached detailed Office action for a list of the certified copies not received.

Attachment(s)

1) ☐ Notice of References Cited (PTO-892)

2) ☐ Notice of Draftsperson's Patent Drawing Review (PTO-948)

3) ☐ Information Disclosure Statement(s) (PTO/SB/08) Paper No(s)/Mail Date _____.

4) ☐ Interview Summary (PTO-413) Paper No(s)/Mail Date. _____.

5) ☐ Notice of Informal Patent Application

6) ☐ Other: _____.

Continuation of Disposition of Claims: Claims pending in the application are 1,2,4,7-10,13,14,16,19-23,26,27,29-31,34,35,37-39,42,43,45,48,49,51,52,55,56,58,61-65,68,69,71-73,76,77,79-81,86-92,97-99,102,104 and 108-111.

Election/Restrictions

Restriction is required under 35 U.S.C. 121 and 372.

This application contains the following inventions or groups of inventions which are not so linked as to form a single general inventive concept under PCT Rule 13.1.

In accordance with 37 CFR 1.499, applicant is required, in reply to this action, to elect a single invention to which the claims must be restricted.

NOTE: Claim 50 is withdrawn because it is dependent on a canceled claim.

Group 1, claim(s) 1, 2, 4, 7, 8, 9, 10, 13, 14, 16, 19, 20-23, 26, 27, 29-31, 34, 35, 37-39, drawn to the special technical feature of a method for identifying a compound that induces senescence in a mammalian cell comprising culturing a mammalian cell, in the presence and absence of the compound; assaying the expression of at least one cellular gene in **Table 2A** in said cell in the presence of the compound with the expression of said gene in the cell in the absence of the compound; and identifying compounds that induce senescence when expression of at least one cellular gene in Table 2A is higher in the presence of the compound than in the absence of the compound.

Additionally, Applicants must elect a single or specific combination of genes from Table 2A. Each gene is structurally and functionally distinct and lacks the same or corresponding special technical features.

Group 2, claim(s) 42, 43, 45, 48, 49, 51, 52, 55, 56, 58, 61-65, 68, 69, 71-73, 76, 77, 79-81 drawn to the special technical feature of a method for identifying a compound that induces senescence in a mammalian cell comprising culturing a mammalian cell in the presence and absence of the compound; assaying the expression of at least one cellular gene in **Table 1** in said cell in the presence of the compound with the expression of said gene in the cell in the absence of the compound; and identifying compounds that induce senescence when expression of at least one cellular gene in Table 1 is lower in the presence of the compound than in the absence of the compound.

Additionally, Applicants must elect a single or specific combination of genes from Table 1. Each gene is structurally and functionally distinct and lacks the same or corresponding special technical features.

Group 3, claim(s) 86-92, drawn to the special technical feature of a method for assessing the efficacy of a treatment of a disease or condition relating to abnormal cell proliferation or neoplastic cell growth, the method comprising: obtaining a biological sample comprising cells from an animal having a disease or condition relating to abnormal cell proliferation or neoplastic cell growth before treatment and after treatment; comparing expression of at least one gene in Table 1, 2A, or 2B after treatment with expression of said gene(s) before treatment; and determining that said treatment has efficacy for treating the disease or condition relating to abnormal cell proliferation or neoplastic cell growth if expression of at least one gene in Table 2A and

2B is higher after treatment than before treatment or expression of at least one gene in Table 1 is lower after treatment than before treatment.

Additionally, Applicants must elect a single or specific combination of genes from Table 1, 2A, or 2B. Each gene is structurally and functionally distinct and lacks the same or corresponding special technical features.

Group 4, claim(s) 97-99, 102, 104, drawn to the special technical feature of a method for identifying a compound that inhibits senescence-associated induction of cellular gene expression comprising: (a) contacting the cell with a cytotoxic agent at a concentration of said agent that inhibits cell growth; (b) assaying the cell in the presence and absence of the compound for changes in expression of cellular genes induced when cells become senescent; (c) and identifying the compound as an inhibitor of senescence-associated induction of cellular gene expression if expression of the cellular genes of (b) is induced in the absence of the compound but is not induced in the presence of the compound.

Group 5, claim(s) 108-111, drawn to the special technical feature of a method for determining treatment efficacy in an animal treated with a compound that induces cellular senescence, comprising: assaying a biological fluid from the animal before and after treatment for a senescence marker; and determining that the treatment is effective

when the amount of the marker detected after treatment is greater than the amount of the marker detected before treatment.

The inventions listed as Groups I-V do not relate to a single general inventive concept under PCT Rule 13.1 because, under PCT Rule 13.2, they lack the same or corresponding special technical features for the following reasons:

Groups I-V encompass different special technical features identified in the groupings above. The inventions listed above do not relate to a single general inventive concept under PCT Rule 13.1 because under unity of invention between different categories of inventions, unity of invention will only be found to exist if specific combinations of inventions are present.

The allowed combinations do not include multiple methods of using products, as claimed in the instant application. The methods do not share the same method steps, objectives, response variables, and/or criteria for success. Since multiple methods with different special technical features are claimed, Groups I-V are not so linked as to form a single general inventive concept and restriction is proper.

SPECIES ELECTION

Species Election for Group I

A. This application contains claims directed to more than one species of the generic invention. These species are deemed to lack unity of invention because they are not so linked as to form a single general inventive concept under PCT Rule 13.1.

The species of mammalian cell are as follows:

(1) recombinant mammalian cell comprising a reporter gene operably linked to a promoter from a cellular gene in Table 2A) (claims 8, 20, 22, 26, 34, 38 and claims dependent on these); or

(2) a non-recombinant mammalian cell.

The species listed above do not relate to a single general inventive concept under PCT Rule 13.1 because, under PCT Rule 13.2, the species lack the same or corresponding special technical features for the following reasons: Each cell is structurally and functionally distinct requiring different agents, mechanisms of action, method steps, and criteria for success to accomplish the assay.

B. This application contains claims directed to more than one species of the generic invention. These species are deemed to lack unity of invention because they are not so linked as to form a single general inventive concept under PCT Rule 13.1.

The species of mammalian cell are as follows (claims 2, 14, 27, 35):

(1) p53 deficient cell;

(2) tumor cell; or

(3) p53 deficient tumor cell.

The species listed above do not relate to a single general inventive concept under PCT Rule 13.1 because, under PCT Rule 13.2, the species lack the same or corresponding special technical features for the following reasons: Each cell is structurally, physiologically, and functionally distinct.

C. This application contains claims directed to more than one species of the generic invention. These species are deemed to lack unity of invention because they are not so linked as to form a single general inventive concept under PCT Rule 13.1.

The species of expression detection are as follows (claims 4, 10, 16, 23, 31, 39):

(1) hybridization to a complementary nucleic acid;

(2) using an immunological reagent; or

(3) assaying for an activity of the cellular gene product.

The species listed above do not relate to a single general inventive concept under PCT Rule 13.1 because, under PCT Rule 13.2, the species lack the same or corresponding special technical features for the following reasons: Each assay step requires distinct methods steps, reagents, response variables and criteria for success.

D. This application contains claims directed to more than one species of the generic invention. These species are deemed to lack unity of invention because they are not so linked as to form a single general inventive concept under PCT Rule 13.1.

The species of methods are as follows:

(1) further comprising the step of: assaying expression of one or more genes in Table 2B; and identifying compounds wherein expression of the genes in Table 2B is not greater in the presence of the compound than in the absences of the compound (claim 9 or 30);

(2) further comprising assaying the mammalian cell for cell growth and morphological features of senescence; and identifying compounds that induce

If Applicant elects species "(1)" or "(3)" in D above, Applicants must elect a species in E below:

E. This application contains claims directed to more than one species of the generic invention. These species are deemed to lack unity of invention because they are not so linked as to form a single general inventive concept under PCT Rule 13.1.

The species of cellular gene are as follows:

Pick one or a specific combination of gene(s) from Table 2B.

The species listed above do not relate to a single general inventive concept under PCT Rule 13.1 because, under PCT Rule 13.2, the species lack the same or corresponding special technical features for the following reasons: Each gene is structurally and functionally distinct.

Species Election for Group II

NOTE: There is no antecedent basis of a "recombinant" mammalian cell as recited in claims 55 and 76.

F. This application contains claims directed to more than one species of the generic invention. These species are deemed to lack unity of invention because they are not so linked as to form a single general inventive concept under PCT Rule 13.1.

The species of mammalian cell are as follows:

(1) recombinant mammalian cell comprising a reporter gene operably linked to a promoter from a cellular gene in Table 2A) (claims 49, 55, 62, 63, 62, 68, 72, 76, 80 and claims dependent on these); or

(2) a non-recombinant mammalian cell.

The species listed above do not relate to a single general inventive concept under PCT Rule 13.1 because, under PCT Rule 13.2, the species lack the same or corresponding special technical features for the following reasons: Each cell is structurally and functionally distinct requiring different agents, mechanisms of action, method steps, and criteria for success to accomplish the assay.

G. This application contains claims directed to more than one species of the generic invention. These species are deemed to lack unity of invention because they are not so linked as to form a single general inventive concept under PCT Rule 13.1.

The species of mammalian cell are as follows (claims 43, 56, 69, 77):

(1) p53 deficient cell;

(2) tumor cell; or

(3) p53 deficient tumor cell.

The species listed above do not relate to a single general inventive concept under PCT Rule 13.1 because, under PCT Rule 13.2, the species lack the same or corresponding special technical features for the following reasons: Each cell is structurally, physiologically, and functionally distinct.

H. This application contains claims directed to more than one species of the generic invention. These species are deemed to lack unity of invention because they are not so linked as to form a single general inventive concept under PCT Rule 13.1.

The species of expression detection are as follows (claims 45, 52, 58, 65, 73, 81):

(1) hybridization to a complementary nucleic acid;

(2) using an immunological reagent; or

(3) assaying for an activity of the cellular gene product.

The species listed above do not relate to a single general inventive concept under PCT Rule 13.1 because, under PCT Rule 13.2, the species lack the same or corresponding special technical features for the following reasons: Each assay step requires distinct methods steps, reagents, response variables and criteria for success.

I. This application contains claims directed to more than one species of the generic invention. These species are deemed to lack unity of invention because they are not so linked as to form a single general inventive concept under PCT Rule 13.1.

The species of methods are as follows:

(1) further comprising the step of: assaying expression of one or more genes in Table 2B; and identifying compounds wherein expression of the genes in Table 2B is not greater in the presence of the compound than in the absences of the compound (claim 51 or 72);

(2) further comprising assaying the mammalian cell for cell growth and morphological features of senescence; and identifying compounds that induce senescence when expression of at least one cellular gene in Table 1 is lower in the presence of the compound than in the absence of the compound and the cells

are growth-inhibited and express morphological features of senescence in the presence of the compound (claim 55 or 76);

(3) further comprising assaying the mammalian cell for cell growth and morphological features of senescence; and identifying compounds that induce senescence when expression of at least one cellular gene in Table 1 is lower in the presence of the compound than in the absence of the compound and the cells are growth-inhibited and express morphological features of senescence in the presence of the compound (claim 55 or 76) and a method of claim 55 or 62 or 76 further comprising the steps of: assaying expression of one or more genes in Table 2B; and identifying compounds wherein expression of the genes in Table 2B is not greater in the presence of the compound than in the absence of the compound (claim 63 or 64 or 80); or

(4) not further comprising assaying additional genes in Table 2B or assaying for cell growth and morphological features of senescence.

The species listed above do not relate to a single general inventive concept under PCT Rule 13.1 because, under PCT Rule 13.2, the species lack the same or corresponding special technical features for the following reasons: Each method is distinct requiring different method steps, objectives, response variables, and/or criteria for success.

If Applicant elects species "(1)" or "(3)" in I above, Applicants must elect a species in J below:

J. This application contains claims directed to more than one species of the generic invention. These species are deemed to lack unity of invention because they are not so linked as to form a single general inventive concept under PCT Rule 13.1.

The species of cellular gene are as follows:

Pick one or a specific combination of gene(s) from Table 2B.

The species listed above do not relate to a single general inventive concept under PCT Rule 13.1 because, under PCT Rule 13.2, the species lack the same or corresponding special technical features for the following reasons: Each gene is structurally and functionally distinct.

Species Election for Group III

K. This application contains claims directed to more than one species of the generic invention. These species are deemed to lack unity of invention because they are not so linked as to form a single general inventive concept under PCT Rule 13.1.

The species of expression detection are as follows (claim 92):

(1) hybridization to a complementary nucleic acid;

(2) using an immunological reagent; or

(3) assaying for an activity of the cellular gene product.

The species listed above do not relate to a single general inventive concept under PCT Rule 13.1 because, under PCT Rule 13.2, the species lack the same or corresponding special technical features for the following reasons: Each assay step requires distinct methods steps, reagents, response variables and criteria for success.

Species Election for Group IV

L. This application contains claims directed to more than one species of the generic invention. These species are deemed to lack unity of invention because they are not so linked as to form a single general inventive concept under PCT Rule 13.1.

The species of cellular gene are as follows (claim 98 or 104):

Pick ONE or a specific combination of genes from claim 98 or 104.

The species listed above do not relate to a single general inventive concept under PCT Rule 13.1 because, under PCT Rule 13.2, the species lack the same or corresponding special technical features for the following reasons: Each gene is structurally and functionally distinct.

M. This application contains claims directed to more than one species of the generic invention. These species are deemed to lack unity of invention because they are not so linked as to form a single general inventive concept under PCT Rule 13.1.

The species of expression detection are as follows (claim 99):

(1) hybridization to a complementary nucleic acid;

(2) using an immunological reagent; or

(3) assaying for an activity of the cellular gene product.

The species listed above do not relate to a single general inventive concept under PCT Rule 13.1 because, under PCT Rule 13.2, the species lack the same or corresponding special technical features for the following reasons: Each assay step requires distinct methods steps, reagents, response variables and criteria for success.

N. This application contains claims directed to more than one species of the generic invention. These species are deemed to lack unity of invention because they are not so linked as to form a single general inventive concept under PCT Rule 13.1.

The species of mammalian cell are as follows (claim 102):

(1) p53 deficient cell;

(2) tumor cell; or

(3) p53 deficient tumor cell.

The species listed above do not relate to a single general inventive concept under PCT Rule 13.1 because, under PCT Rule 13.2, the species lack the same or corresponding special technical features for the following reasons: Each cell is structurally, physiologically, and functionally distinct.

O. This application contains claims directed to more than one species of the generic invention. These species are deemed to lack unity of invention because they are not so linked as to form a single general inventive concept under PCT Rule 13.1.

The species of mammalian cell are as follows:

(1) recombinant mammalian cell comprising a recombinant expression construct (claim 104); or

(2) a non-recombinant mammalian cell.

The species listed above do not relate to a single general inventive concept under PCT Rule 13.1 because, under PCT Rule 13.2, the species lack the same or corresponding special technical features for the following reasons: Each cell is

structurally and functionally distinct requiring different agents, mechanisms of action, method steps, and criteria for success to accomplish the assay.

Species Election for Group V

P. This application contains claims directed to more than one species of the generic invention. These species are deemed to lack unity of invention because they are not so linked as to form a single general inventive concept under PCT Rule 13.1.

The species of senescence marker are as follows (claim 109):

Pick ONE marker from claim 109.

The species listed above do not relate to a single general inventive concept under PCT Rule 13.1 because, under PCT Rule 13.2, the species lack the same or corresponding special technical features for the following reasons: Each marker is structurally and functionally distinct.

Q. This application contains claims directed to more than one species of the generic invention. These species are deemed to lack unity of invention because they are not so linked as to form a single general inventive concept under PCT Rule 13.1.

The species of expression detection are as follows (claim 111):

(1) hybridization to a complementary nucleic acid;

(2) using an immunological reagent; or

(3) assaying for an activity of the cellular gene product.

The species listed above do not relate to a single general inventive concept under PCT Rule 13.1 because, under PCT Rule 13.2, the species lack the same or corresponding special technical features for the following reasons: Each assay step requires distinct methods steps, reagents, response variables and criteria for success.

Applicant is required, in reply to this action, to elect a single species to which the claims shall be restricted if no generic claim is finally held to be allowable. The reply must also identify the claims readable on the elected species, including any claims subsequently added. An argument that a claim is allowable or that all claims are generic is considered non-responsive unless accompanied by an election.

Upon the allowance of a generic claim, applicant will be entitled to consideration of claims to additional species which are written in dependent form or otherwise include all the limitations of an allowed generic claim as provided by 37 CFR 1.141. If claims are added after the election, applicant must indicate which are readable upon the elected species. MPEP § 809.02(a).

Applicant is advised that the reply to this requirement to be complete must include (i) an election of a species or invention to be examined even though the requirement be traversed (37 CFR 1.143) and (ii) identification of the claims encompassing the elected invention.

The election of an invention or species may be made with or without traverse. To reserve a right to petition, the election must be made with traverse. If the reply does not

distinctly and specifically point out supposed errors in the restriction requirement, the election shall be treated as an election without traverse.

Should applicant traverse on the ground that the inventions or species are not patentably distinct, applicant should submit evidence or identify such evidence now of record showing the inventions or species to be obvious variants or clearly admit on the record that this is the case. In either instance, if the examiner finds one of the inventions unpatentable over the prior art, the evidence or admission may be used in a rejection under 35 U.S.C.103(a) of the other invention.

Applicant is reminded that upon the cancellation of claims to a non-elected invention, the inventorship must be amended in compliance with 37 CFR 1.48(b) if one or more of the currently named inventors is no longer an inventor of at least one claim remaining in the application. Any amendment of inventorship must be accompanied by a request under 37 CFR 1.48(b) and by the fee required under 37 CFR 1.17(i).

Any inquiry concerning this communication or earlier communications from the examiner should be directed to Laura B. Goddard, Ph.D. whose telephone number is (571) 272-8788. The examiner can normally be reached on 7:00am-3:30pm.

If attempts to reach the examiner by telephone are unsuccessful, the examiner's supervisor, Larry Helms can be reached on 571-272-0832. The fax phone number for the organization where this application or proceeding is assigned is 571-273-8300.

Information regarding the status of an application may be obtained from the Patent Application Information Retrieval (PAIR) system. Status information for published applications may be obtained from either Private PAIR or Public PAIR. Status information for unpublished applications is available through Private PAIR only. For more information about the PAIR system, see http://pair-direct.uspto.gov. Should you have questions on access to the Private PAIR system, contact the Electronic Business Center (EBC) at 866-217-9197 (toll-free). If you would like assistance from a USPTO Customer Service Representative or access to the automated information system, call 800-786-9199 (IN USA OR CANADA) or 571-272-1000.

Laura B Goddard, Ph.D.
Examiner
Art Unit 1642

UNITED STATES PATENT AND TRADEMARK OFFICE

Commissioner for Patents
United States Patent and Trademark Office
P.O. Box 1450
Alexandria, VA 22313-1450
www.uspto.gov

AUG 30 2006

ROTHWELL, FIGG, ERNST & MANBECK, P.C.
1425 K STREET, N.W.
SUITE 800
WASHINGTON DC 20005

In re Application of Proesch et al Serial No.: 10/520,150 Filed: March 22, 2005 Attorney Docket No.: 2958-129	: PETITION DECISION

This is in response to the petition filed under 37 CFR 1.181 on May 22, 2006, requesting that claims 9-20 be examined in the present application. In addition, applicants petition that if claims 9-20 are not found to be encompassed by the invention, then applicants would like new claims 21-32 to be designated as encompassed by the elected invention.

BACKGROUND

A review of the file history shows that applicants filed a preliminary amendment on January 03, 2005, amending the claim multiple dependency but not the "use" language of the claims in accordance with US practice.

The examiner mailed a restriction requirement on June 14, 2005, clearly stating:-

> *In accordance with 37 CFR 1.499, applicant is required, in reply to this action, to elect a single invention to which the claims must be restricted.*
> *Claims 1-8, drawn to <u>method of making a medicament using proteosome inhibitors</u>.*
> *This application contains claims directed to more than one species of the generic invention. These species are deemed to lack unity of invention because they are not so linked as to form a single general inventive concept under PCT Rule 13.1 .*

The restriction was drawn to a method of making a medicament.

Applicants responded to the restriction on June 30, 2005, electing a species of the proteosome inhibitor without traversing and without amending the claims in accordance with US practice.

On August 10, 2005, the examiner mailed a non-final Office action wherein claims 1-5, drawn to the elected species, were rejected under 35 USC 101 and 35 USC 112, 2 paragraph. Claims 1-5 were also rejected under 35 USC 102 (b) over Weichold et al. Claims 6-8, drawn to the non-elected species, were withdrawn from consideration.

Applicants filed an amendment on February 7, 2006 canceling claims 1-5, withdrawing claims 6-8 and adding new claims 9-20 drawn to a method of treating a patient infected with a virus.

The examiner mailed a non-responsive letter on March 20, 2006 setting a response period of 30 days stating that newly added claims 9-20 were not readable on the elected invention because these claims are drawn to a method of treating a patient infected with a virus, whereas the previously examined and elected group of claims are drawn to a method of manufacture of a medicament for the treatment of an individual infected with a virus.

In response to the non-responsive letter, applicants filed this petition on May 22, 2006, along with an amendment adding new claims 21-32 and, requesting examination of claims 9-20 or claims 21-32.

DISCUSSION

Applicants argue that the claims were written as use claims because method of treatment claims are not permitted in Europe. However, in the preliminary amendment, applicants did not amend the "use" claims in accordance with standard US practice. In the response to the restriction, applicants elected without traverse, and at that time also failed to amend the claims according to US practice. The examiners' restriction clearly stated that the claims were drawn to a "method of manufacturing" and not a "method of treating". It was only after an action on the merits that applicants decided to amend the claims. Even though applicants amended the claims to a method of use format, they were drawn to a method of treating instead of a method of manufacturing. Thus, the examiner was correct in not examining new claims 9-20 drawn to a method of treating.

Also, in the amendment filed May 22, 2006, applicants added new claims 21-32 drawn to a method of preparing and administering a medicament for treating a virus selected from selected *proteosome inhibitors*. These claims are not drawn to the originally presented and elected invention in that they recite a "method of preparation and administration of a medicament" instead of a " method of manufacturing a medicament". A method of preparing and administrating a medicament is different than a method of manufacturing a medicament. One is drawn to a process of making formulations for administration and the other is drawn to a process of actually manufacturing (making) the medicament.

DECISION

In view of the above, the petition to examine new claims 9-20 or 21-32 is **DENIED.**

Any request for reconsideration of this petition decision must be filed within two (2) months of the mailing date of this decision.

Should there be any questions about this decision please contact Ms. Marianne C. Seidel, by letter addressed to Director, TC 1600, at the address listed above, or by telephone at 571-272-0584 or by facsimile sent to the general Office facsimile number 571-273-8300.

Bruce M. Kisliuk
Director, Technology Center 1600

16 SEP 2005

UNITED STATES PATENT AND TRADEMARK OFFICE

Commissioner for Patents
United States Patent and Trademark Office
P.O. Box 1450
Alexandria, VA 22313-1450
www.uspto.gov

Richard H. Tushin
Dykema Gossett, PLLC
Third Floor West, Franklin Square
1300 I Street, N.W.
Washington, D.C. 20005-3353

In re Application of	:	
GOVAERTS	:	
Application No.: 10/520,167	:	DECISION ON PETITION
PCT No.: PCT/DK03/00471	:	
Int. Filing Date: 03 July 2003	:	UNDER 37 CFR 1.181
Priority Date: 04 July 2002	:	
Atty Docket No.: 66722-067-7	:	
For: WIRELESS COMMUNICATION SYSTEMS	:	

This is a decision on applicant's "Request For Corrected Notice of Acceptance And Filing Receipt" filed 21 August 2005 in the United States Patent and Trademark Office (USPTO). The request is being treated as a petition under 37 CFR 1.181. No petition fee is due.

BACKGROUND

On 04 January 2005, applicant filed a transmittal letter for entry into the national stage in the United States which was accompanied by the requisite basic national fee as required by 35 U.S.C. 371(c)(1) and a first preliminary amendment.

On 14 February 2005, applicant filed an executed combined declaration and power of attorney and assignment document.

On 10 August 2005, applicant was mailed a "Notification of Acceptance" (Form PCT/DO/EO/903) indicating a 371 date of receipt of the 35 U.S.C. 371(c)(1), (c)(2) and (c)(4) requirements as 04 January 2005.

On 21 August 2005, applicant filed the present petition claiming that the 371 requirements were satisfied on 14 February 2005.

DISCUSSION

A review of the application file finds the original declaration and power of attorney contained therein. The document is stamped "OIPE JC174 FEB 14 2005 Patent & Trademark Office." Thus, it is clear that the subject paper was filed in the USPTO on 14 February 2005. The combined declaration and power of attorney was the last of the 35 U.S.C. 371 requirements

to be satisfied. As such, it is proper to grant applicant's petition at this time. In addition, the declaration and international application show that the country of origin of the priority document was Denmark, not Panama as reflected on the filing receipt. This item will be changed as well.

CONCLUSION

Applicant's petition under 37 CFR 1.181 is **GRANTED**.

The application will be given an international filing date of 03 July 2003 under 35 U.S.C. 363 and a date of **14 February 2005** under 35 U.S.C. 371(c)(1), (c)(2) and (c)(4).

The "Notification of Acceptance of Application Under 35 U.S.C. 371 and 37 CFR 1.494 or 1.495" (Form PCT/DO/EO/903) mailed 10 August 2003 indicating a date of 04 January 2005 under 35 U.S.C. 371(c) is hereby **VACATED**.

As authorized, the $130.00 surcharge for providing an oath or declaration of the inventor later than thirty months from the claimed priority date will be charged to Deposit Account No.: 04-2223.

This application is being returned to the United States Designated/Elected Office (US/DO/EO) for further processing in accordance with this decision, namely the issuance of a "Notification of Acceptance of Application Under 35 U.S.C. 371 and 37 CFR 1.494 or 1.495" (Form PCT/DO/EO/903) and a corrected filing receipt indicating the correct 371 date as detailed above.

Derek A. Putonen
Attorney Advisor
Office of PCT Legal Administration
Tel: (571) 272-3294
Fax: (571) 273-0459

UNITED STATES PATENT AND TRADEMARK OFFICE

Commissioner for Patents
United States Patent and Trademark Office
P.O. Box 1450
Alexandria, VA 22313-1450
www.uspto.gov

01 MAR 2007

CHRISTENSEN O'CONNOR JOHNSON KINDNESS PLLC
1420 FIFTH AVENUE
SUITE 2800
SEATTLE WA 98101-2347

In re Application of:
FORSTER, Ian, James
U.S. Application No.: 10/520,174
PCT No.: PCT/GB2003/002825
International Filing Date: 02 July 2003
Priority Date: 03 July 2002
Atty Docket No.: IVEN124642
For: VARIABLE FREQUENCY TAG

DECISION ON PETITION

The petition for revival under 37 CFR 1.137(b) filed 25 August 2006 in the above-captioned application is hereby **GRANTED** as follows:

Applicant's statement that "the entire delay in filing the required reply from the due date for the reply until the filing of a grantable petition under 37 CFR 1.137(b) was unintentional" satisfies the requirements of 37 CFR 1.137(b)(3).

Applicant has submitted the "required reply," that is, a proper response to the "Notification Of Missing Requirements" (Form PCT/DO/EO/905) mailed 05 July 2005 in the form of an executed declaration in compliance with 37 CFR 1.497 and the required surcharge fee. Applicant has also submitted the required petition fee, and the requirements of 37 CFR 1.137(b) have been satisfied.

This application is being referred to the National Stage Processing Division of the Office of PCT Operations for further processing in accordance with this decision. The date under 35 U.S.C. 371(c)(1), (c)(2), and (c)(4) is 25 August 2006.

Richard M. Ross
Attorney Advisor
Office of PCT Legal Administration
Telephone: (571) 272-3296
Facsimile: (571) 273-0459

UNITED STATES PATENT AND TRADEMARK OFFICE

Commissioner for Patents
United States Patent and Trademark Office
P.O. Box 1450
Alexandria, VA 22313-1450
www.uspto.gov

01 MAR 2007

CHRISTENSEN O'CONNOR JOHNSON KINDNESS PLLC
1420 FIFTH AVENUE
SUITE 2800
SEATTLE WA 98101-2347

In re Application of:
FORSTER, Ian, James
U.S. Application No.: 10/520,174
PCT No.: PCT/GB2003/002825
International Filing Date: 02 July 2003
Priority Date: 03 July 2002
Atty Docket No.: IVEN124642
For: VARIABLE FREQUENCY TAG

DECISION ON PETITION

The petition for revival under 37 CFR 1.137(b) filed 25 August 2006 in the above-captioned application is hereby **GRANTED** as follows:

Applicant's statement that "the entire delay in filing the required reply from the due date for the reply until the filing of a grantable petition under 37 CFR 1.137(b) was unintentional" satisfies the requirements of 37 CFR 1.137(b)(3).

Applicant has submitted the "required reply," that is, a proper response to the "Notification Of Missing Requirements" (Form PCT/DO/EO/905) mailed 05 July 2005 in the form of an executed declaration in compliance with 37 CFR 1.497 and the required surcharge fee. Applicant has also submitted the required petition fee, and the requirements of 37 CFR 1.137(b) have been satisfied.

This application is being referred to the National Stage Processing Division of the Office of PCT Operations for further processing in accordance with this decision. The date under 35 U.S.C. 371(c)(1), (c)(2), and (c)(4) is 25 August 2006.

Richard M. Ross
Attorney Advisor
Office of PCT Legal Administration
Telephone: (571) 272-3296
Facsimile: (571) 273-0459

UNITED STATES PATENT AND TRADEMARK OFFICE

Commissioner for Patents
United States Patent and Trademark Office
P.O. Box 1450
Alexandria, VA 22313-1450
www.uspto.gov

21 FEB 2007

52531
CHRISTENSEN O'CONNOR JOHNSON KINDNESS PLLC
1420 Fifth Ave.
Seattle, WA 98101-2347

In re Application of FORSTER, Ian James U.S. Application No.: 10/520,175 PCT No.: PCT/IT2004/000148 Int. Filing Date: 02 July 2003 Priority Date: 03 July 2002 Attorney Docket No.: IVEN124382 For: READER INTERFACE DEVICE	**DECISION ON PETITION FOR REVIVAL UNDER 37 CFR 1.137(b)**

Applicant's "Petition for Revival of an Unintentionally Abandoned Application Under 37 CFR §1.137(b)" filed on 25 August 2006 is hereby **GRANTED** as follows:

A declaration in compliance with 37 CFR 1.497(a) and (b), a $130.00 surcharge fee and the petition fee were submitted. Applicant's statement in the petition is sufficient to satisfy 37 CFR 1.137(b)(3). A terminal disclaimer is not required. Accordingly, all requirements under 37 CFR 1.137(b) have been satisfied.

Applicant has completed the requirements for acceptance under 35 U.S.C. 371(c). The application has an international filing date of 02 July 2003, under 35 U.S.C. 363 and a 35 U.S.C. 371(c)(1), (c)(2) and (c)(4) date of 25 August 2006.

This application is being forwarded to the National Stage Processing Division of the Office of PCT Operations for continued processing.

James Thomson
Attorney Advisor
Office of PCT Legal Administration

Tel.: (571) 272-3302

UNITED STATES PATENT AND TRADEMARK OFFICE

Commissioner for Patents
United States Patent and Trademark Office
P.O. Box 1450
Alexandria, VA 22313-1450
www.uspto.gov

21 FEB 2007

52531
CHRISTENSEN O'CONNOR JOHNSON KINDNESS PLLC
1420 Fifth Ave.
Seattle, WA 98101-2347

In re Application of	:	
FORSTER, Ian James	:	
U.S. Application No.: 10/520,175	:	
PCT No.: PCT/IT2004/000148	:	**DECISION ON**
Int. Filing Date: 02 July 2003	:	**PETITION FOR REVIVAL**
Priority Date: 03 July 2002	:	**UNDER 37 CFR 1.137(b)**
Attorney Docket No.: IVEN124382	:	
For: READER INTERFACE DEVICE	:	

Applicant's "Petition for Revival of an Unintentionally Abandoned Application Under 37 CFR §1.137(b)" filed on 25 August 2006 is hereby **GRANTED** as follows:

A declaration in compliance with 37 CFR 1.497(a) and (b), a $130.00 surcharge fee and the petition fee were submitted. Applicant's statement in the petition is sufficient to satisfy 37 CFR 1.137(b)(3). A terminal disclaimer is not required. Accordingly, all requirements under 37 CFR 1.137(b) have been satisfied.

Applicant has completed the requirements for acceptance under 35 U.S.C. 371(c). The application has an international filing date of 02 July 2003, under 35 U.S.C. 363 and a 35 U.S.C. 371(c)(1), (c)(2) and (c)(4) date of 25 August 2006.

This application is being forwarded to the National Stage Processing Division of the Office of PCT Operations for continued processing.

James Thomson
Attorney Advisor
Office of PCT Legal Administration

Tel.: (571) 272-3302

20 JUN 2005

UNITED STATES PATENT AND TRADEMARK OFFICE

COMMISSIONER FOR PATENTS
UNITED STATES PATENT AND TRADEMARK OFFICE
P.O. BOX 1450
ALEXANDRIA, VA 22313-1450
www.uspto.gov

Tom Hunter
Quine Intellectual Property Law Group, P.C.
P.O. Box 458
Alameda, CA 94501

In re Application of FOGELMAN, et al. U.S. Application No.: 10/520,207 PCT No.: PCT/US03/09988 Int. Filing Date: 01 April 2003 Priority Date: 02 April 2002 Attorney Docket No.: 407T-301110US For: G-TYPE PEPTIDES TO AMELIORATE ATHEROSCLEROSIS	DECISION ON PETITION UNDER 37 CFR 1.137(b)

The petition to revive under 37 CFR 1.137(b) filed 27 December 2004 in the above-captioned application is hereby **GRANTED** as follows:

Applicant's statement that "the entire delay in filing the required reply from the due date for the required reply until the filing of a grantable petition under 37 CFR 1.137(b) was unintentional" and the prompt filing of the petition satisfies the requirement of 37 CFR 1.137(b)(3).

A review of the application file reveals that applicant has now provided payment of the full, U.S. Basic National fee and the requirements of 37 CFR 1.137(b) have been satisfied. Therefore, the request to revive the application abandoned under 35 U.S.C. 371(d) is granted as to the National stage in the United States of America.

This application is being forwarded to the United States Designated/Elected Office (US/DO/EO) for continued processing including the issuance of a Notification of Missing Requirements (Form PCT/DO/EO/905) indicating that an executed oath or declaration of the inventors is required.

Derek A. Putonen
Attorney Advisor
Office of PCT Legal Administration
Tel: (571) 272-3294
Fax: (571) 273-0459

UNITED STATES PATENT AND TRADEMARK OFFICE

UNITED STATES DEPARTMENT OF COMMERCE
United States Patent and Trademark Office
Address: COMMISSIONER FOR PATENTS
P.O. Box 1450
Alexandria, Virginia 22313-1450
www.uspto.gov

Weaver Austin Villeneuve & Sampson LLP
P.O. BOX 70250
OAKLAND, CA 94612-0250

Mail Date: 04/20/2010

Applicant	: Alan M. Fogelman	: DECISION ON REQUEST FOR
Patent Number	: 7638494	: RECALCULATION of PATENT
Issue Date	: 12/29/2009	: TERM ADJUSTMENT IN VIEW
Appliction No	: 10/520,207	: OF WYETH AND NOTICE OF INTENT TO
Filed	: 12/23/2005	: ISSUE CERTIFICATE OF CORRECTION
		:

The Request for Recalculation is **GRANTED** to the extent indicated.

The patent term adjustment has been determined to be **173** days. The USPTO will *sua sponte* issue a certificate of correction reflecting the amount of PTA days determined by the recalculation.

Prior to the issuance of the certificate of correction, the USPTO will afford patentee an opportunity to be heard and request reconsideration. Accordingly, patentee has **one month or thirty (30) days**, whichever is longer, to file a request for reconsideration of this patent term adjustment calculation. See 35 U.S.C. 154(b)(3)(B)(ii) and 37 CFR 1.322(a)(4). No extensions of time will be granted under 37 CFR 1.136.

Patentee should use document code PET.OP if electronically filing a request for reconsideration of this patent term adjustment calculation. The patentee must also include the information required by 37 CFR 1.705(b)(2) and the fee required by 37 CFR 1.18(e). If patentee does not file a timely request for reconsideration of this patent term adjustment calculation including the information required by 37 CFR 1.705(b)(2) and the fee required by 37 CFR 1.18(e), the USPTO will issue a certificate of correction reflecting the PTA determination noted above.

Patentee should be aware that in order to preserve the right to review in the United States District Court for the District of Columbia of the USPTO patent term adjustment determination, patentee must ensure that he or she also take the steps required under 35 U.S.C. 154(b)(4)(A) in a timely manner. Nothing in the request for recalculation should be construed as providing an alternative time frame for commencing a civil action under 35 U.S.C. 154(b)(4)(A).

Any questions concerning this decision should be directed to the Office of Patent Legal Administration at 571-272-7702.

UNITED STATES PATENT AND TRADEMARK OFFICE

UNITED STATES DEPARTMENT OF COMMERCE
United States Patent and Trademark Office
Address: COMMISSIONER FOR PATENTS
P.O. Box 1450
Alexandria, Virginia 22313-1450
www.uspto.gov

KENYON & KENYON LLP
ONE BROADWAY
NEW YORK, NY 10004

Mail Date: 04/21/2010

Applicant	: Michael Nau	: DECISION ON REQUEST FOR
Patent Number	: 7648084	: RECALCULATION of PATENT
Issue Date	: 01/19/2010	: TERM ADJUSTMENT IN VIEW
Appliction No	: 10/520,217	: OF WYETH AND NOTICE OF INTENT TO
Filed	: 08/10/2005	: ISSUE CERTIFICATE OF CORRECTION
		:

The Request for Recalculation is **GRANTED** to the extent indicated.

The patent term adjustment has been determined to be **1197** days. The USPTO will *sua sponte* issue a certificate of correction reflecting the amount of PTA days determined by the recalculation.

Prior to the issuance of the certificate of correction, the USPTO will afford patentee an opportunity to be heard and request reconsideration. Accordingly, patentee has **one month or thirty (30) days**, whichever is longer, to file a request for reconsideration of this patent term adjustment calculation. See 35 U.S.C. 154(b)(3)(B)(ii) and 37 CFR 1.322(a)(4). No extensions of time will be granted under 37 CFR 1.136.

Patentee should use document code PET.OP if electronically filing a request for reconsideration of this patent term adjustment calculation. The patentee must also include the information required by 37 CFR 1.705(b)(2) and the fee required by 37 CFR 1.18(e). If patentee does not file a timely request for reconsideration of this patent term adjustment calculation including the information required by 37 CFR 1.705(b)(2) and the fee required by 37 CFR 1.18(e), the USPTO will issue a certificate of correction reflecting the PTA determination noted above.

Patentee should be aware that in order to preserve the right to review in the United States District Court for the District of Columbia of the USPTO patent term adjustment determination, patentee must ensure that he or she also take the steps required under 35 U.S.C. 154(b)(4)(A) in a timely manner. Nothing in the request for recalculation should be construed as providing an alternative time frame for commencing a civil action under 35 U.S.C. 154(b)(4)(A).

Any questions concerning this decision should be directed to the Office of Patent Legal Administration at 571-272-7702.

22 DEC 2005

UNITED STATES PATENT AND TRADEMARK OFFICE

Commissioner for Patents
United States Patent and Trademark Office
P.O. Box 1450
Alexandria, VA 22313-1450
www.uspto.gov

Lumen Intellectual Property Services, Inc.
2345 Yale Street, 2nd Floor
Palo Alto, CA 94306

In re Application of
KUBOTA et al.
Application No.: 10/520,242
PCT No.: PCT/JP03/05628
Int. Filing Date: 02 May 2003
Priority Date: 24 June 2002
Attorney Docket No.: HON-109/PCT/US
For: METHOD FOR MAKING CARBON NANOTUBES

DECISION ON PETITION
UNDER 37 CFR 1.137(b)

This decision is in response to applicants' petition to revive filed 10 June 2005 and applicants' facsimile communication dated 30 November 2005. The petition to revive under 37 CFR 1.137(b) in the above-captioned application is hereby **GRANTED** as follows:

Applicants' statement that "the entire delay in filing the required reply from the due date for the reply until the filing of a grantable petition under 37 CFR 1.137(b) was unintentional" meets the requirements of 37 CFR 1.137(b)(3).

A review of the application file reveals that applicants have submitted the basic national fee and the requirements of 37 CFR 1.137(b) have been satisfied. Therefore, the request to revive the application abandoned under 35 U.S.C. 371(d) is granted as to the National stage in the United States of America.

This application is being returned to the United States Designated/Elected Office for processing in accordance with this decision.

Anthony Smith

Anthony Smith
Attorney-Advisor
Office of PCT Legal Administration
Tel: (571) 272-3298
Fax: (571) 273-0459

UNITED STATES PATENT AND TRADEMARK OFFICE

#5

17 JAN 2006

Commissioner for Patents
United States Patent and Trademark Office
P.O. Box 1450
Alexandria, VA 22313-1450
www.uspto.gov

Bingham McCuthchen LLP
Three Embarcadero Center
18th Floor
San Francisco, CA 94111-4067

In re Application of HACKER et al. U.S. Application No. 10/520,252 PCT No.: PCT/US02/26276 It. Filing Date: 15 August 2002 Priority Date: None Attorney Docket No.: 7210332001-3221000 For: NANOPOROUS MATERIALS AND METHODS OF FORMATION THEREOF	:	DECISION ON PETITION

This decision is in response to "Petition under 37 CFR 1.47(a)" filed 06 September 2005 to accept the application without the signature of joint-inventor, Scott Lefferts.

BACKGROUND

On 15 August 2002, applicants filed international application PCT/US02/26276 which claimed no priority date. Pursuant to 37 CFR 1.495, the deadline for payment of the basic national fee in the United States was to expire 30 months from the international filing date, 15 February 2005.

On 03 January 2005 applicants filed a transmittal letter for entry into the national stage in the United States, which accompanied by, inter alia: the requisite basic national fee as required by 35 U.S.C. 371(c)(1); a copy of the international application; and a preliminary amendment.

On 25 July 2005, the United Stated Designated/Elected Office mailed a Notification of Missing Requirements under 35 U.S.C. 371 (Form PCT/DO/EO/905) indicating that an oath or declaration in compliance with 37 CFR 1.497(a) and (b) must be filed. The notification set a two-month time limit in which to respond.

On 06 September 2005, applicants filed a petition under 37 CFR 1.47(a).

DISCUSSION

A petition under 37 CFR 1.47(a) must be accompanied by: (1) the fee under 37 CFR 1.17, (2) factual proof that the missing joint inventor refuses to execute the application or cannot be reached after diligent effort, (3) a statement of the last known address of the missing inventor, and (4) an oath or declaration by each 37 CFR 1.47(a) applicant on his or

her own behalf and behalf of the nonsigning joint inventor. Items (1) and (3) have been satisfied.

As to item (2), petitioner states that Scott Lefferts cannot be found or reached after diligent effort. Section 409.03(d) of the Manual of Patent Examining Procedure (M.P.E.P.), **Proof of Unavailability or Refusal**, states, in part:

> Where inability to find or reach a nonsigning inventor "after diligent effort" is the reason for filing under 37 CFR 1.47, a statement of facts should be submitted that fully describes the exact facts which are relied on to establish that a diligent effort was made.
>
> The fact that a nonsigning inventor is on vacation or out of town and is therefore temporarily unavailable to sign the declaration is not an acceptable reason for filing under 37 CFR 1.47.
>
> The statement of facts must be signed, where at all possible, by a person having firsthand knowledge of the facts recited therein. Statements based on hearsay will not normally be accepted. Copies of documentary evidence such as internet searches, certified mail return receipts, cover letters of instructions, telegrams, that support a finding that the nonsigning inventor could not be found or reached should be made part of the statement. The steps taken to locate the whereabouts of the nonsigning inventor should be included statement of facts. It is important that the statement contain facts as opposed to conclusions.

A review of the present petition reveals that the petitioner has not provided an acceptable showing that a diligent effort was made to locate the nonsigning inventor, Scott Lefferts. Petitioner states that "[i]nventor Scott Lefferts is no longer employed by Honeywell. . .We are taking the fact that he has been non-responsive to our correspondence as his refusal to sign the declaration/power of attorney." However, no documentary evidence to support the failed attempts were provided with the present petition.

As stated above, where a refusal of the inventor to sign the application papers is alleged, a statement of facts is needed from a person having first hand knowledge of the facts that a complete copy of the application papers (specification, claims, and drawings) were sent to Scott Lefferts, and when such papers were sent. In addition, copies of documentary evidence such as a certified mail return receipt, cover letter of instruction, telegrams, etc., should be supplied with the declaration.

As to Item (4), a review of the declaration filed on 06 September 2005 reveals that declaration is not in an acceptable form. Specifically, there is an issue as to whether the declaration has been properly executed. The declaration filed with the petition includes duplicate sheets. It is unclear if the inventors were presented with only their signature page, in which case the execution would be improper, or if they were presented with a complete declaration for signing, but counsel subsequently compiled the declaration into

the single document filed 06 September 2005, which is improper. (See MPEP 201.03, Page 200-7) Therefore, in order to satisfy this item, applicants are required to file declaration(s) which comply with 37 CFR 1.497(a) and (b).

For the reasons stated above, it would not be appropriate to accept the application without the signature of Scott Lefferts under 37 CFR 1.47(a) at this time.

CONCLUSION

The petition under 37 CFR 1.47(a) is **DISMISSED** without prejudice.

If reconsideration on the merits of this petition is desired, a proper response must be filed within **TWO (2) MONTH** from the mail date of this decision. Any reconsideration request should include a cover letter entitled "Renewed Petition Under 37 CFR 1.47(a)." No additional petition fee is required.

Any further correspondence with respect to this matter should be addressed to: Mail Stop PCT, Commissioner for Patents, Office of PCT Legal Administration, P.O. Box 1450, Alexandria, Virginia 22313-1450, with the contents of the letter marked to the attention of the Office of PCT Legal Administration.

Anthony Smith
Attorney-Advisor
Office of PCT Legal Administration
Tel.: (571) 272-3298
Fax: (571) 273-0459

#7

UNITED STATES PATENT AND TRADEMARK OFFICE

Commissioner for Patents
United States Patent and Trademark Office
P.O. Box 1450
Alexandria, VA 22313-1450
www.uspto.gov

28 JUL 2006

Sandra Poteat Thompson
Buchalter Nemer
18400 Von Karman, Suite 800
Irvine, CA 92612

In re Application of HACKER et al. U.S. Application No. 10/520,252 PCT No.: PCT/US02/26276 It. Filing Date: 15 August 2002 Priority Date: None Attorney Docket No.: 7210332001-3221000 For: NANOPOROUS MATERIALS AND METHODS OF FORMATION THEREOF	DECISION ON PETITION UNDER 37 CFR 1.47(a)

This decision is in response to applicant's "Renewed Petition under 37 CFR 1.47(a)" filed 22 June 2006. In a decision dated 17 January 2006, applicant's petition under 37 CFR 1.47(a) to accept the application without the signature of inventor, Scott Lefferts, was dismissed without prejudice.

The petition for status under 37 CFR 1.47(a) is moot since the declaration filed 22 June 2006, with the present renewed petition was executed by the named inventor, the previous non-signing inventor, Scott Lefferts.

However, the declaration filed on 22 June 2006, executed by Scott Lefferts, is defective and is insufficient to satisfy the oath or declaration requirement of 35 CFR 371(c)(4) for entry into the national stage in the United States of America. Specifically, the declaration submitted includes an alteration that has not been initialed and dated by the inventor. (See MPEP §605.04(a) and 37 CFR 1.52(c)) Further, it appears that the declaration has been altered to correct Scott Lefferts' last name. If this is the case, an explanation pursuant to Manual of Patent Examining Procedure §201.03 or §605.04(a) is required.

CONCLUSION

For the reasons above; the renewed petition under 37 CFR 1.47(a) is **DISMISSED** as MOOT.

A proper response must be filed within **TWO (2) MONTH** from the mail date of this decision. Extensions of time may be obtained under 37 CFR 1.136(a). A proper response must include: 1) a newly executed declaration (by Scott Lefferts) in compliance with 37 CFR 1.497(a)-(b) and 2) an explanation pursuant to Manual of Patent Examining Procedure §201.03 or §605.04(a).

Any further correspondence with respect to this matter should be addressed to: Mail Stop PCT, Commissioner for Patents, Office of PCT Legal Administration, P.O. Box 1450, Alexandria, Virginia 22313-1450, with the contents of the letter marked to the attention of the Office of PCT Legal Administration.

Anthony Smith
Attorney-Advisor
Office PCT Legal Administration
Tel.: 571-272-3298
Facsimile: 571-273-0459

#9

UNITED STATES PATENT AND TRADEMARK OFFICE

Commissioner for Patents
United States Patent and Trademark Office
P.O. Box 1450
Alexandria, VA 22313-1450
www.uspto.gov

31 OCT 2006

Sandra Poteat Thompson
Buchalter Nemer, P.C.
18400 Von Karman, Suite 800
Irvine, CA 92612

In re Application of HACKER et al. U.S. Application No. 10/520,252 PCT No.: PCT/US02/26276 It. Filing Date: 15 August 2002 Priority Date: None Attorney Docket No.: H9930-4505 For: NANOPOROUS MATERIALS AND METHODS OF FORMATION THEREOF	DECISION ON PETITION UNDER 37 CFR 1.47(a)

This decision is issued in response to applicant's "Response to Decision on Petition under 37 CFR 1.47(a)" filed 02 October 2006. In a decision dated 28 July 2006, applicant's petition under 37 CFR 1.47(a) to accept the application without the signature of inventor, Scott Lefferts, was dismissed as moot. However, the declaration (by Scott Lefferts) submitted with the renewed petition under 37 CFR 1.47(a), was insufficient to satisfy the oath or declaration requirement of 35 CFR 371(c)(4) for entry into the national stage in the United States of America.

Applicant states in the present petition that "the declaration had been altered to correct the spelling of Scott Lefferts' last name." Applicant's statement has been construed as meaning that the discrepancy between the name of the second inventor indicated in the international application during the international phase and the name of the second inventor as it appears in the declaration is the result of a typographical error. As indicated in Section 201.03 of the Manual of Patent Examining Procedure, where a typographical or transliteration error in the spelling of an inventor's name is discovered, a petition under 37 CFR 1.48(a) is not required. Accordingly, counsel's explanation of the difference in the spelling of the second inventor's last name is accepted and noted for the record.

The petition for status under 37 CFR 1.47(a) is moot since the declaration filed 02 October 2006, with the present renewed petition was executed by the named inventor, the previous non-signing inventor, Scott Lefferts. For the reasons above, the petition under 37 CFR 1.47 is dismissed as moot.

CONCLUSION

Applicants' petition under 37 CFR 1.47(a) is **DISMISSED** as moot and applicant's request to correct the name of the second inventor is **GRANTED**.

The application has an international filing date of 15 August 2002 under 35 U.S.C. 363 and a date of **02 October 2006** under 35 U.S.C. 371(c)(1),(c)(2) and (c)(4).

This application is being forwarded to the United States Designated/Elected Office (US/DO/EO) for continued processing in accordance with this decision.

Anthony Smith
Attorney-Advisor
Office PCT Legal Administration
Tel.: 571-272-3298
Facsimile: 571-273-0459

UNITED STATES PATENT AND TRADEMARK OFFICE

Commissioner for Patents
United States Patent and Trademark Office
P.O. Box 1450
Alexandria, VA 22313-1450
www.uspto.gov

DELPHI TECHNOLOGIES, INC.
M/C 480-410-202
PO BOX 5052
TROY MI 48007

COPY MAILED

JUN 20 2008

OFFICE OF PETITIONS

In re Application of	:	
Matthew E. MOORE	:	
Application No. 10/520,257	:	DECISION ON PETITION
Filed: August 15, 2005	:	
Attorney Docket No. **DP-308433**	:	

This is a decision on the petition under the unintentional provisions of 37 CFR 1.137(b), filed May 09, 2008, to revive the above-identified application.

The petition is **GRANTED**.

This application became abandoned for failure to timely submit corrected formal drawings on or before March 31, 2008, as required by the Notice of Allowance and Fee(s) Due and the Notice of Allowability, mailed December 31, 2007. Accordingly, the date of abandonment of this application is April 01, 2008.

The petition satisfies the requirements of 37 CFR 1.137(b) in that petitioner has supplied (1) the reply in the form of the corrected formal drawings , (2) the petition fee of $1540; and (3) a proper statement of unintentional delay. Accordingly, the failure to timely file corrected drawings as required by the Notice of Allowance is accepted as being unintentionally delayed.

Telephone inquiries concerning this decision should be directed to Tredelle Jackson at (571) 272-2783.

This application is being referred to the Office of Data Management for processing in accordance with this decision on petition.

Ramesh Krishnamurthy

Ramesh Krishnamurthy
Petitions Examiner
Office of Petitions

2 5 JUN 2007

UNITED STATES PATENT AND TRADEMARK OFFICE

Commissioner for Patents
United States Patent and Trademark Office
P.O. Box 1450
Alexandria, VA 22313-1450
www.uspto.gov

DAHYEE LAW GROUP
24301 SOUTHLAND DR.
SUITE 405
HAYWARD CA 94545

In re Application of	:	
ANDERSON, Richard, Park	:	
Application No.: 10/520,269	:	DECISION
PCT No.: PCT/US2003/034021	:	
Int. Filing Date: 24 October 2003	:	
Priority Date: 25 October 2002	:	
Attorney's Docket No.: ANDE0001	:	
For: OWNER-BROKERED KNOWLEDGE	:	
SHARING MACHINE	:	

This is a decision on applicant's submission filed in the United States Patent and Trademark Office (USPTO) on 28 September 2006, which has properly been treated as a petition under 37 CFR 1.182. The petition is **DISMISSED** for the reasons set forth below.

In December 2004, applicant filed a transmittal letter for entry into the national stage in the United States. The transmittal letter requested that the application papers be processed as the national stage application of international application PCT/US2003/034201.

On 28 September 2006, applicant filed the instant petition under 37 CFR 1.182. The petition requests that the present application be treated as the national stage application of international application PCT/US2003/034021 rather than international application PCT/US2003/034201. However, the petition fee has not been paid. There is an authorization to charge Deposit Account 501460 in the file. However, the authorization is not signed by an authorized user of the account and is therefore ineffective. (The only signature of record in the file (note also the "Unlocatable File" section below") is Leon E. Jew and he is not an authorized user of the account.)

File Unlocatable

The electronic application file includes only the submission filed 28 September 2006. The paper file including all papers filed before that date was not located after a reasonable search.

When the Office cannot locate the file of an application after a reasonable search, the

Office notifies the applicant and sets a time period within which the applicant must comply with 37 CFR 1.251(a)(1), (a)(2), or (a)(3). 37 CFR 1.251(a).

Applicant is hereby notified that the Office cannot locate the file after a reasonable search. Applicant is hereby given **TWO (2) MONTHS** to file a submission in compliance with 37 CFR 1.251(a)(1), (a)(2), or (a)(3). Extensions of time may be granted under 37 CFR 1.136(a).

Failure to timely file a proper response will result in abandonment of the application. 37 CFR 1.251(b).

Please direct further correspondence with respect to this matter to Mail Stop PCT, Commissioner for Patents, Office of PCT Legal Administration, P.O. Box 1450, Alexandria, Virginia 22313-1450, with the contents of the letter marked to the attention of the Office of PCT Legal Administration.

Daniel Stemmer
Legal Examiner
PCT Legal Affairs
Office of Patent Cooperation Treaty
Legal Administration
Telephone: (571) 272-3301
Facsimile: (571) 273-0459

0 1 OCT 2007

UNITED STATES PATENT AND TRADEMARK OFFICE

Commissioner for Patents
United States Patent and Trademark Office
P.O. Box 1450
Alexandria, VA 22313-1450
www.uspto.gov

DAHYEE LAW GROUP
24301 SOUTHLAND DR.
SUITE 405
HAYWARD CA 94545

In re Application of	:	
ANDERSON, Richard, Park	:	
Application No.: 10/520,269	:	DECISION
PCT No.: PCT/US2003/034021	:	
Int. Filing Date: 24 October 2003	:	
Priority Date: 25 October 2002	:	
Attorney's Docket No.: ANDE0001	:	
For: OWNER-BROKERED KNOWLEDGE	:	
SHARING MACHINE	:	

This is a decision on applicant's submission filed in the United States Patent and Trademark Office (USPTO) on 02 July 2007. The submission includes a submission under 37 CFR 1.251(a) and a petition under 37 CFR 1.182.

BACKGROUND

In December 2004, applicant filed a transmittal letter for entry into the national stage in the United States. The transmittal letter requested that the application papers be processed as the national stage application of international application PCT/US2003/034201.

On 28 September 2006, applicant filed a petition under 37 CFR 1.182. The petition requested that the present application be treated as the national stage application of international application PCT/US2003/034021 rather than international application PCT/US2003/034201.

On 25 June 2007, a decision was mailed dismissing applicant's petition under 37 CFR 1.182 because the petition fee had not been paid. The decision also indicated that the electronic application file includes only the submission filed 28 September 2006 and the paper file including all papers filed before that date was not located after a reasonable search. Accordingly, applicant was given two months to file a submission in compliance with 37 CFR 1.251(a)(1), (a)(2), or (a)(3).

On 02 July 2007, applicant filed the instant submission which included a submission under 37 CFR 1.251(a)(1) and a renewed petition under 37 CFR 1.182.

DISCUSSION

Submission Under 37 CFR 1.251(a)

The submission filed 02 July 2007 is in compliance with 37 CFR 1.251(a)(1). Additionally, applicant has provided sufficient evidence to establish that on 30 December 2004, applicant filed application papers including a Transmittal Letter for entry into the national stage in the United States (From PTO-1390), a marked-up version of the specification and claims, a clean version of the amendments to the specification and claims, and a declaration of the inventor. The proof is in the form of the copy of the receipt for the above-identified application which bears a USPTO date stamp of 30 December 2004 and and a USPTO stamp showing US application number 10/520,269. Practitioner states that the copy of the above-identified items filed 02 July 2007 are true copies of the items originally filed 30 December 2004.

The declaration of inventors filed 30 December 2004 is in compliance with 37 CFR 1.497(a)-(b).

Petition Under 37 CFR 1.182

The petition fee has been paid. A review of the application file including counsel's statements in the submission filed 28 September 2006, as well as a review of the international publication of PCT/US03/34201, reveals that the indication of international application PCT/US2003/34201 was incorrect, and that the present application should in fact be the national stage application of international application PCT/US03/34021.

CONCLUSION

For the reasons set forth above, applicant's petition under 37 CFR 1.182 is **GRANTED**.

This application is being forwarded to the National Stage Processing Branch of the Office of PCT Operations to continue national stage processing of the application including processing the application papers filed 30 December 2004 as the national stage of international application PCT/US03/34021.

Daniel Stemmer
Legal Examiner
PCT Legal Affairs
Office of Patent Cooperation Treaty
Legal Administration
Telephone: (571) 272-3301
Facsimile: (571) 273-0459

UNITED STATES PATENT AND TRADEMARK OFFICE

Commissioner for Patents
United States Patent and Trademark Office
P.O. Box 1450
Alexandria, VA 22313-1450
www.uspto.gov

01 DEC 2008

RICHARD P. ANDERSON
100B ALBRIGHT WAY
LOS GATOS CA 95032

In re Application of	:	DECISION ON REQUEST
ANDERSON, Richard Park	:	
Application No.: 10/520,269	:	FOR WITHDRAWAL
Attorney's Docket No.: ANDE0001	:	
For: OWNER-BROKERED KNOWLEDGE	:	AS ATTORNEY
SHARING MACHING	:	

This is in response to the "REQUEST FOR WITHDRAWAL AS ATTORNEY OR AGENT" filed 18 September 2008. Leon Jew has requested that he be withdrawn as attorney or agent of record. No fee is required.

The criteria for effecting a proper withdrawal of attorney are spelled out in Section 402.06 of the Manual of Patent Examining Procedure (MPEP) which reads, in part, as follows:

> The Commissioner of Patents and Trademarks usually requires that there be at least 30 days between approval of withdrawal and the later of the expiration date of a time period for reply or the expiration date of the period which can be obtained by a petition and fee for extension of time under 37 CFR 1.136(a). This is so that the applicant will have sufficient time to obtain other representation or take other action. If a period has been set for reply and the period may be extended without a showing of cause pursuant to 37 CFR 1.136(a) by filing a petition for extension of time and fee, the practitioner will not be required to seek such extension of time for withdrawal to be approved. In such a situation, however, withdrawal will not be approved unless at least 30 days would remain between the date of approval and the last date on which such a petition for extension of time and fee could properly be filed.

Since all of the criteria delineated in Section 402.06 of the M.P.E.P. have been complied with and since there are no outstanding responses due, the request to withdraw as attorney of record is **GRANTED**.

All future communications will be forwarded to Richard P. Anderson as indicated in the "REQUEST FOR WITHDRAWAL AS ATTORNEY OR AGENT" filed 18

September 2008.

In view of the above discussion, counsel's Request for Withdrawal is **GRANTED**.

A copy of this decision and the withdrawal request will be forwarded to Leon Jew.

/Daniel Stemmer/

Daniel Stemmer
Legal Examiner
PCT Legal Affairs
Office of Patent Cooperation Treaty
Legal Administration
Telephone: (271) 272-3301
Facsimile: (571) 273-0459

CC: DAHYEE LAW GROUP
24301 SOUTHLAND DR.
SUITE 405
HAYWARD CA 94545

UNITED STATES PATENT AND TRADEMARK OFFICE

Commissioner for Patents
United States Patent and Trademark Office
P.O. Box 1450
Alexandria, VA 22313-1450
www.uspto.gov

MAILED

APR 16 2010

OFFICE OF PETITIONS

FISH & RICHARDSON PC
P.O. BOX 1022
MINNEAPOLIS, MN 55440-1022

In re Patent of Krebs et al.	:	DECISION ON REQUEST
Patent No. 7,574,246	:	FOR RECONSIDERATION OF
Issue Date: August 11, 2009	:	PATENT TERM ADJUSTMENT
Application No. 10/520,270	:	AND NOTICE OF INTENT TO
Filing Date: August 5, 2005	:	ISSUE CERTIFICATE OF
Attorney Docket No. 18661-0002US1	:	CORRECTION

This is a decision on the petition filed October 9, 2009, which is being treated as a petition under 37 C.F.R. § 1.705(d) requesting the patent term adjustment indicated on the patent be corrected to indicate that the term of the patent is extended or adjusted by two hundred seventy-three (273) days.

The petition to correct the patent term adjustment indicated on the above-identified patent to indicate that the term of the above-identified patent is extended or adjusted by two hundred seventy-three (273) days is **GRANTED to the extent indicated herein**.

The Office will *sua sponte* issue a certificate of correction. Pursuant to 37 C.F.R. § 1.322, the Office will not issue a certificate of correction without first providing assignee or patentee an opportunity to be heard. Accordingly, patentees are given **one (1) month or thirty (30) days**, whichever is longer, from the mail date of this decision to respond. No extensions of time will be granted under 37 C.F.R. § 1.136.

Issue 1

Patentees contend the period of delay under 35 U.S.C. § 154(b)(1)(B) ("B Delay") is 199 days. Pursuant to 35 U.S.C. § 154(b)(1)(B)(i), B Delay does not include any time period consumed by continued examination. Although Patentees recognized the need to exclude a time period due to the RCE, Patentees failed to exclude the actual date the RCE was filed from the period of B Delay. B Delay in this case is 198 days, not 199 days, after the date the RCE was filed is excluded from the period of B Delay.

The period of B Delay and the period of delay under 35 U.S.C. § 154(b)(1)(A) ("A Delay") do not overlap. Therefore, the patent term adjustment should have included an increase of 198 days for B Delay.

Issue 2

Patentees object to the Office's entry of a reduction under 37 C.F.R. § 1.704(c)(10).

The Office issued a Notice of Allowance on April 1, 2009.

On June 30, 2009, applicants filed a two-page issue fee transmittal letter and a copy of a completed issue fee transmittal form (PTOL-85b). The letter was titled "Response to Notice of Allowance" and stated,

> In response to the Notice of Allowance mailed April 1, 2009, enclosed is a completed issue fee transmittal form.
>
> The required issue and publication fee in the amount of $1810 is being paid concurrently herewith on the Electronic Filing System (EFS) by way of Deposit Account authorization. Please apply any other charges or credits to Deposit Account No. 06-1050, referencing Attorney Docket No. 18661-0002US1.

As a result of the June 30, 2009 correspondence, the Office entered a 43-day reduction under 37 C.F.R. § 1.704(c)(10).

A review of the "Response to Notice of Allowance" indicates the Office's entry of a 43-day reduction under 37 C.F.R. § 1.704(c)(10) was improper.

Issue 3

As part of Patentees' duty of good faith and candor, Patentees note the Office should have entered a reduction of 37 days for the Information Disclosure Statement ("IDS") filed January 29, 2009.

The Office mailed a non-final Office action on August 21, 2008. Patentees filed a reply on December 22, 2008, followed by an IDS on January 28, 2009.

The record fails to indicate the IDS was expressly requested by the examiner and the IDS was not accompanied by a statement under 37 C.F.R. § 1.704(d). Therefore, the Office agrees the Office should have entered a 37-day reduction under 37 C.F.R. § 1.704(c)(8) as a result of the IDS filed January 28, 2009.

Conclusion

The period of A Delay is 260 days.

The period of B Delay is 198 days.

The period of overlap between A and B Delay is 0 days.

The patent term adjustment on the patent was based on a period of delay under 37 C.F.R. § 1.704 ("Applicant Delay") of 192 days. However, once the improper 43-day reduction is removed and the proper 37-day reduction entered, Applicant Delay is 186 days.

A Certificate of Correction will be issued indicating a patent term adjustment of 272 days which is the sum of 260 days of A Delay and 198 days of B Delay reduced by 0 days of overlap and reduced by 186 days of Applicant Delay.

The Office acknowledges submission of the $200.00 fee set forth in 37 C.F.R. § 1.18(e). No additional fees are required.

The application is being forwarded to the Certificates of Correction Branch for issuance of a certificate of correction. The Office will issue a certificate of correction indicating that the term of the patent is extended or adjusted by **two hundred seventy-two (272)** days.

Telephone inquiries specific to this decision should be directed to Senior Petitions Attorney Steven Brantley at (571) 272-3203.

Charles Steven Brantley
Senior Petitions Attorney
Office of Petitions

Enclosure: Copy of DRAFT Certificate of Correction

UNITED STATES PATENT AND TRADEMARK OFFICE

CERTIFICATE OF CORRECTION

PATENT NO.	:	7,574,246 B2
ISSUE DATE	:	August 11, 2009
INVENTOR(S)	:	Krebs et al.

DRAFT

It is certified that error appears in the above-identified patent and that said Letters Patent is hereby corrected as shown below:

On the cover page,

[*] Notice: Subject to any disclaimer, the term of this patent is extended or adjusted under 35 U.S.C. 154(b) by 68 days.

Delete the phrase "by 68 days" and insert - by 272 days--

UNITED STATES PATENT AND TRADEMARK OFFICE

Commissioner for Patents
United States Patent and Trademark Office
P.O. Box 1450
Alexandria, VA 22313-1450
www.uspto.gov

MARTIN D. MOYNIHAN d/b/a PRTSI, INC.
P.O. BOX 16446
ARLINGTON, VA 22215

MAILED

MAR 06 2009

OFFICE OF PETITIONS

In re Application of Robert P. Schnall Application No. 10/520,273 Filed: January 18, 2005 Attorney Docket No. 28657	: : : : :	ON PETITION

This is a decision on the petition under 37 CFR 1.137(b), filed December 18, 2008, to revive the above-identified application.

The application became abandoned for failure to file a proper reply to the final Office action mailed April 7, 2008. A Notice of Abandonment was mailed on October 31, 2008.

The petition satisfies the requirements of 37 CFR 1.137(b) in that petitioner has supplied (1) the reply in the form of a Request for Continued Examination (RCE) with the $405 fee and the required submission under 37 CFR 1.114; (2) the petition fee of $810; and (3) a proper statement of unintentional delay. Therefore, the petition is **GRANTED**.

This application file is being referred to Technology Center Art Unit 3735 for processing of the RCE and for appropriate action by the Examiner in the normal course of business on the amendment submitted in accordance with 37 CFR 1.114.

Telephone inquiries concerning this decision should be directed to the undersigned at (571) 272-3226.

Andrea Smith
Petitions Examiner
Office of Petitions

07 NOV 2005

#5

UNITED STATES PATENT AND TRADEMARK OFFICE

Commissioner for Patents
United States Patent and Trademark Office
P.O. Box 1450
Alexandria, VA 22313-1450
www.uspto.gov

Martin Moynihan
c/o Anthony Castorina
2001 Jefferson Davis Highway
Suite 207
Arlington, VA 22202

In re Application of: YANOVSKY, Eli	:	
U.S. Application No.: 10/520,274	:	
PCT No.: PCT/IL02/00571	:	
International Filing Date: 16 July 2002	:	DECISION ON PETITION
Priority Date: None	:	
Attorney's Docket No.: 29238	:	
For: SECURE COMMUNICATION SYSTEM AND METHOD USING SHARED RANDOM SOURCE FOR THE KEY CHANGING	:	

This decision is issued in response to the "Request To Withdraw Holding Of Abandonment" filed 28 September 2005, treated herein under 37 CFR 1.181. No petition fee is required.

BACKGROUND

On 16 July 2002, applicant filed international application PCT/IL02/00571, which claimed a priority date of 17 July 2001 and which designated the United States. On 30 January 2003, a copy of the international application was communicated to the United States Patent And Trademark Office (USPTO) by the International Bureau (IB).

The original deadline for payment of the basic national fee was thirty months from the priority date, i.e., 17 January 2004. Prior to expiration of this deadline, on 01 January 2004, the priority claim was withdrawn. Accordingly, the deadline for submission of the basic national fee was extended to thirty months from the international filing date, i.e., 18 January 2005 (17 January 2005 was a federal holiday in the United States).

On 18 January 2005, applicant filed a transmittal letter for entry into the national stage in the United States accompanied by, among other materials, payment of the basic national fee, a copy of the international application, and an executed declaration.

On 19 August 2005, the United States Designated/Elected Office (DO/EO/US) mailed a Notification Of Abandonment (Form PCT/DO/EO/909) indicating that the application was abandoned for failure to provide a copy of the international application within thirty months of the priority date (the priority date listed on the Form PCT/DO/EO/909 was 17 July 2001, the original priority date that was subsequently withdrawn).

On 28 September 2005, applicant filed the petition considered herein. The petition requests withdrawal of the holding of abandonment, stating that a copy of the international application was filed prior to the expiration of thirty months from the priority date.

DISCUSSION

As noted above, a copy of international application PCT/IL02/00571 was communicated to the USPTO by the IB on 30 January 2003, upon publication of the international application. This is prior to the expiration of thirty months from the international filing date, i.e., 18 January 2005.

Accordingly, the Notification Of Abandonment (Form PCT/DO/EO/909) mailed 19 August 2005, based as it was on applicant's purported failure to provide a copy of the international application before the expiration of thirty months from the priority date (in this case, the international filing date), is appropriately withdrawn.

CONCLUSION

Applicant's petition to withdraw the holding of abandonment is **GRANTED.**

The Notification Of Abandonment (Form PCT/DO/EO/909) mailed 19 August 2005 is hereby **VACATED**.

The application is being forwarded to the National Stage Processing Branch of the Office Of PCT Operations for further processing. The date under 35 U.S.C. 371 (c)(1), (c)(2), and (c)(4) is 18 January 2005.

Richard M. Ross
PCT Petitions Attorney
Office Of PCT Legal Administration
Telephone: (571) 272-3296
Facsimile: (571) 273-0459

20 SEP 20

UNITED STATES PATENT AND TRADEMARK OFFICE

Commissioner for Patents
United States Patent and Trademark Office
P.O. Box 1450
Alexandria, VA 22313-1450
www.uspto.gov

Michael I. Steward
Sim & McBurney
6th Floor, 330 University Avenue
Toronto, Ontario
Canada, M5G 1R7

In re Application of	:	
Hudson, et al.	:	
Application No.: 10/520,275	:	
PCT No.: PCT/CA03/01076	:	DECISION
Int. Filing Date: 18 July 2003	:	
Priority Date: 18 July 2002	:	
Attorney's Docket No.: 10704-19 MIS:jb	:	
For: SCRAMBLED EGG SNACK FOOD	:	

This application comes before the PCT Legal Office for matters arising under 35 U.S.C. 371. No petition fee is due.

BACKGROUND

On 18 July 2003, applicant filed international application PCT/CA03/01076 which claimed the benefit of earlier United States provisional applications, the earliest of which was filed 18 July 2003. A copy of the international application was communicated to the United States Patent and Trademark Office from the International Bureau on 29 January 2004. Accordingly, the thirty-month period for paying the basic national fee for the national stage in the United States expired at midnight on 18 January 2005.

On 18 January 2005, applicant filed a letter for entry into the national stage in the United States which was accompanied by, *inter alia*, an application data sheet and the basic national fee of $950 as required by 35 U.S.C. 371(c). These papers were assigned application number 10/520,275.

On 19 August 2005, the United States Patent and Trademark Office in its capacity as an Elected Office mailed out a "NOTIFICATION OF MISSING REQUIREMENTS UNDER 35 U.S.C. 371 IN THE UNITED STATES DESIGNATED/ELECTED OFFICE (DO/EO/US)" (Form PCT/DO/EO/905) indicating that applicant was required to file an oath/declaration and a surcharge fee. The notice set a response period of two (2) months.

DISCUSSION

A review of the application file reveals that applicant did not provide a customer number on the original transmittal letter filed on 18 January 2005. However, an error was made and the attorney docket number was entered as the customer number. As a result the "NOTIFICATION OF MISSING REQUIREMENTS UNDER 35 U.S.C. 371 IN THE UNITED STATES DESIGNATED/ELECTED OFFICE (DO/EO/US)" (Form PCT/DO/EO/905) mailed 19 August 2005 was mailed to the wrong address. Because applicant did not ever receive that notification, that notification is hereby vacated.

CONCLUSION

For the above reasons, the "NOTIFICATION OF MISSING REQUIREMENTS UNDER 35 U.S.C. 371 IN THE UNITED STATES DESIGNATED/ELECTED OFFICE (DO/EO/US)" (Form PCT/DO/EO/905) mailed 19 August 2005 is hereby vacated.

The application is being returned to the United States Designated/Elected Office for the mailing of a "NOTIFICATION OF MISSING REQUIREMENTS UNDER 35 U.S.C. 371 IN THE UNITED STATES DESIGNATED/ELECTED OFFICE (DO/EO/US)" (Form PCT/DO/EO/905) to the proper address.

Debra Brittingham
Office of PCT Legal Administration
DSB/LS:dsb

Leonard Smith
PCT Legal Examiner
Office of PCT Legal Administration

Tel: (571) 272-3280
Fax: (571) 273-0459

UNITED STATES PATENT AND TRADEMARK OFFICE

Commissioner for Patents
United States Patent and Trademark Office
P.O. Box 1450
Alexandria, VA 22313-1450
www.uspto.gov

COPY MAILED

DEC 0 4 2009

OFFICE OF PETITIONS

SIM & MCBURNEY
330 UNIVERSITY AVENUE
6TH FLOOR
TORONTO ON M5G 1R7 CA CANADA

In re Application of	:	
Hudson et al.	:	
Application No. 10/520,275	:	DECISION ON PETITION
Filed: November 23, 2005	:	
Attorney Docket No. 10704-19 MIS:jb	:	

This is a decision on the petition under the unintentional provisions of 37 CFR 1.137(b), filed October 9, 2009, to revive the above-identified application.

The petition is **GRANTED**.

The two-month period for filing an appeal brief under 37 CFR 41.37 (accompanied by the fee required by 37 CFR 41.20(b)(2)), runs from the date of this decision.

The application became abandoned for failure to reply in a timely manner to the non-final Office action mailed, April 6, 2009, which set a shortened statutory period for reply of three (3) months. No extensions of time under the provisions of 37 CFR 1.136(a) were obtained. Accordingly, the application became abandoned on October 7, 2009.

The petition satisfies the requirements of 37 CFR 1.137(b) in that petitioner has supplied (1) the reply in the form of a Notice of Appeal and fee of $540, (2) the petition fee of 1,620, and (3) a proper statement of unintentional delay.

Telephone inquiries concerning this decision should be directed to Alicia Kelley at (571) 272-6059.

This application is being referred to Technology Center AU 1794 to await the filing of an appeal brief or for such other appropriate reply as may be submitted to continue prosecution of the application.

Chris Bottorff
Petitions Examiner
Office of Petitions

UNITED STATES PATENT AND TRADEMARK OFFICE

Commissioner for Patents
United States Patent and Trademark Office
P.O. Box 1450
Alexandria, VA 22313-1450
www.uspto.gov
DIW Feb-07

ARMSTRONG, KRATZ, QUINTOS, HANSON & BROOKS, LLP
1725 K STREET, NW
SUITE 1000
WASHINGTON DC 20006

COPY MAILED

FEB 0 9 2007

OFFICE OF PETITIONS

In re Application of	:	
Takako Araki	:	
Application No. 10/520,280	:	DECISION ON PETITION
Filed: 27 January, 2005	:	
Attorney Docket No. 050042	:	

This is a decision on the "PETITION FOR WITHDRAWAL OF HOLDING OF ABANDONMENT," filed 20 November, 2006.

The petition is **GRANTED**.

On 6 April, 2006, the Office mailed a non-final Office action, which set a three-month shortened statutory period for reply. In the apparent absence of a timely filed response, the application was held abandoned on 7 July, 2006. Notice of Abandonment was mailed on 13 November, 2006.

In the petition, applicant asserts that the practitioner did not receive the non-final Office action. Specifically, the practitioner asserts that the Office action was returned to the USPTO as undeliverable.

In the absence of any irregularity in the mailing of the non-final Office action, there is a strong presumption that the final Office action was properly mailed to practitioner at the address of record. This presumption may be overcome by a showing that the final Office action was not in fact received. The showing required to establish the failure to receive an Office communication must include a statement from the practitioner stating that the Office communication was not received by the practitioner and attesting to the fact that a search of the file jacket and docket records indicates that the Office action was not received. A copy of the docket record where the non-received Office action would have been entered had it been received and

docketed must be attached to and referenced in practitioner's statement. See "Withdrawing the Holding of Abandonment When Office Actions Are Not Received" 1156 Official Gazette 53 (November 16, 1993) and M.P.E.P. § 711.03(c). The showing outlined above may not be sufficient if there are circumstances that point to a conclusion that the final Office action may have been lost after receipt rather than a conclusion that the final Office action was lost in the mail.

A review of the record indicates that the envelope in which the Office action was mailed was stamped "Insufficient Address" by the U.S. Postal Service. It is also noted that "No Address" is written below the address window on the envelope. As such, the showing of record is that there was an error in the mailing of the Office action mailed on 6 April, 2006, in that the address was not visible when the envelope was mailed. For this reason, the practitioner did not receive the nonfinal Office action of 6 April, 2006.

The petitioner has made a sufficient showing of nonreceipt of the Office action. Accordingly, the Notice of Abandonment is hereby vacated and the holding of abandonment withdrawn.

As such, the holding of abandonment is **withdrawn**. The application is restored to pending status.

The petition is **GRANTED.**

The application file is being referred to Technology Center 2600 technical support staff for remailing of the non-final Office action mailed on 6 April, 2006. The period for reply will be reset from the mailing date thereof.

Telephone inquiries concerning this decision may be directed to the undersigned at (571) 272-3231. Any other questions regarding the status of the application or the examination process should be directed to the Technology Center.

DWood

Douglas I. Wood
Senior Petitions Attorney
Office of Petitions

UNITED STATES PATENT AND TRADEMARK OFFICE

Commissioner for Patents
United States Patent and Trademark Office
P.O. Box 1450
Alexandria, VA 22313-1450
www.uspto.gov

COPY MAILED
OCT 2 3 2006
OFFICE OF PETITIONS

ROBERT PLATT BELL
REGISTERED PATENT ATTORNEY
P.O. BOX 310
AURORA NY 13026

In re Application of	:	
Colunga	:	
Application No. 10/520,283	:	DECISION ON PETITION
Filed: January 31, 2005	:	TO WITHDRAW
Attorney Docket No. Lambas-0001	:	FROM RECORD
	:	

This is a decision on the Request to Withdraw as attorney or agent of record under 37 C.F.R. § 1.36(b), filed September 6, 2005.

The request is **APPROVED**.

A grantable request to withdraw as attorney/agent of record must be signed by every attorney/agent seeking to withdraw or contain a clear indication that one attorney is signing on behalf of another/others. A request to withdraw will not be approved unless at least 30 (thirty) days would remain between the date of approval and the later of the expiration date of a time to file a response or the expiration date of the maximum time period which can be extended under 37 C.F.R. § 1.136(a).

The request was signed by Robert P. Bell on behalf of himself.

Robert P. Bell has been withdrawn as attorney or agent of record; all other attorneys remain of record.

The correspondence address of record remains unchanged.

Telephone inquiries concerning this decision should be directed to April Wise at 571-272-1642.

April M. Wise
Petitions Examiner
Office of Petitions

cc: Juan F. Casero Lambas
Toledo, Lambas & Associates
C/ Uria 56-4 C
33003 Oviedo
Spain

UNITED STATES PATENT AND TRADEMARK OFFICE

Commissioner for Patents
United States Patent and Trademark Office
P.O. Box 1450
Alexandria, VA 22313-1450
www.uspto.gov

ROBERT PLATT BELL
REGISTERED PATENT ATTORNEY
P.O. BOX 310
AURORA NY 13026

COPY MAILED

NOV 29 2006

OFFICE OF PETITIONS

In re Application of	:	
Alfredo G. Colunga	:	
Application No. 10/520,283	:	DECISION ON PETITION
Filed: January 31, 2005	:	TO WITHDRAW
Attorney Docket No. LAMBAS-0001	:	FROM RECORD
	:	

This is a decision on the Request to Withdraw as attorney or agent of record under 37 C.F.R. § 1.36(b) filed October 31, 2006.

The request is **APPROVED**.

A grantable request to withdraw as attorney/agent of record must be signed by every attorney/agent seeking to withdraw or contain a clear indication that one attorney is signing on behalf of another/others. A request to withdraw will not be approved unless at least 30 (thirty) days would remain between the date of approval and the later of the expiration date of a time to file a response or the expiration date of the maximum time period which can be extended under 37 C.F.R. § 1.136(a).

The request was signed by Robert P. Bell on behalf of all attorneys of record who are associated with this application.

All attorneys/agents associated with this application have been withdrawn.

Applicant is reminded that there is no attorney of record at this time.

The correspondence address of record has been changed and the new correspondence address is the address indicated below.

There are no pending office actions at the present time.

Telephone inquiries concerning this decision should be directed to April Wise at 571-272-1642.

April M. Wise
Petitions Examiner
Office of Petitions

cc: Juan F. Casero Lambas
Toledo, Lambas & Associates
C/ Uria 56-4 C
33003 Oviedo
Spain

UNITED STATES PATENT AND TRADEMARK OFFICE

UNITED STATES DEPARTMENT OF COMMERCE
United States Patent and Trademark Office
Address: COMMISSIONER FOR PATENTS
P.O. Box 1450
Alexandria, Virginia 22313-1450
www.uspto.gov

BLAKELY SOKOLOFF TAYLOR & ZAFMAN LLP
1279 OAKMEAD PARKWAY
SUNNYVALE, CA 94085-4040

Mail Date: 04/21/2010

Applicant	: Sooyoung Park	: DECISION ON REQUEST FOR
Patent Number	: 7592475	: RECALCULATION of PATENT
Issue Date	: 09/22/2009	: TERM ADJUSTMENT IN VIEW
Appliction No	: 10/520,291	: OF WYETH AND NOTICE OF INTENT TO
Filed	: 12/29/2004	: ISSUE CERTIFICATE OF CORRECTION
		:

The Request for Recalculation is **GRANTED** to the extent indicated.

The patent term adjustment has been determined to be **1006** days. The USPTO will *sua sponte* issue a certificate of correction reflecting the amount of PTA days determined by the recalculation.

Prior to the issuance of the certificate of correction, the USPTO will afford patentee an opportunity to be heard and request reconsideration. Accordingly, patentee has **one month or thirty (30) days**, whichever is longer, to file a request for reconsideration of this patent term adjustment calculation. See 35 U.S.C. 154(b)(3)(B)(ii) and 37 CFR 1.322(a)(4). No extensions of time will be granted under 37 CFR 1.136.

Patentee should use document code PET.OP if electronically filing a request for reconsideration of this patent term adjustment calculation. The patentee must also include the information required by 37 CFR 1.705(b)(2) and the fee required by 37 CFR 1.18(e). If patentee does not file a timely request for reconsideration of this patent term adjustment calculation including the information required by 37 CFR 1.705(b)(2) and the fee required by 37 CFR 1.18(e), the USPTO will issue a certificate of correction reflecting the PTA determination noted above.

Patentee should be aware that in order to preserve the right to review in the United States District Court for the District of Columbia of the USPTO patent term adjustment determination, patentee must ensure that he or she also take the steps required under 35 U.S.C. 154(b)(4)(A) in a timely manner. Nothing in the request for recalculation should be construed as providing an alternative time frame for commencing a civil action under 35 U.S.C. 154(b)(4)(A).

Any questions concerning this decision should be directed to the Office of Patent Legal Administration at 571-272-7702.

16 AUG 2005

United States Patent and Trademark Office

#3

Commissioner for Patents
United States Patent and Trademark Office
P.O. Box 1450
Alexandria, VA 22313-1450
www.uspto.gov

Howrey Simon Arnold & White LLP
321 N. Clark Street, Suite 3400
Chicago, IL 60610

In re Application of	:	
Zhang	:	
Application No.: 10/520,296	:	DECISION
PCT No.: PCT/US03/17873	:	
Int. Filing Date: 05 June 2003	:	ON
Priority Date: 05 June 2002	:	
Attorney Docket No.: 05627.0007.PCUS01	:	PETITION
For: T Cell Receptor CDR3 Sequences	:	
And Methods For Detection	:	

The petition to revive under 37 CFR 1.137(b) filed 30 December 2004 in the above-captioned application is hereby **GRANTED** as follows:

Applicant states that "the entire delay in filing the required reply from the due date for the required reply until the filing of a grantable petition under 37 CFR 1.137(b) was unintentional." This statement is being accepted in satisfaction of 37 CFR 1.137(b)(3).

A review of the application file reveals that the basic national fee of $150.00 was provided. The required petition fee of $750.00 was also paid. Thus, the requirements of 37 CFR 1.137(b) have been satisfied. Therefore, the request to revive the application abandoned under 35 U.S.C. 371(d) is granted as to the National stage in the United States of America.

It is noted that applicants paid the search fee in the amount of $250.00, but was entitled to pay a reduced small entity search fee in the amount of $50.00 because the United States was the International Seaching Authority (ISA). Therefore, the $200.00 overpayment is being credited to counsel's Deposit Account No. 08-3038, as authorized by the Transmittal Letter.

This application is being forwarded to the United States Designated/Elected Office for further processing, including the preparation and mailing of a Notification of Missing Requirements (Form PCT/DO/EO/905) requiring the submission of an executed oath or declaration and the payment of the surcharge under 37 CFR 1.492(h).

Boris Miller
PCT Legal Examiner
PCT Legal Office

George M. Dombroske
PCT Legal Examiner
PCT Legal Office
Tel: (571) 272-3283
Fax: (571) 273-0459

UNITED STATES PATENT AND TRADEMARK OFFICE

Commissioner for Patents
United States Patent and Trademark Office
P.O. Box 1450
Alexandria, VA 22313-1450
www.uspto.gov

17 NOV 2006

NUVELO, INC
201 INDUSTRIAL ROAD
SUITE 310
SAN CARLOS CA 94070

In re Application of	:	
RUPP et al.	:	
Application No.: 10/520,299	:	
PCT No.: PCT/US03/21703	:	
Int. Filing Date: 09 July 2003	:	DECISION
Priority Date: 12 July 2002	:	
Attorney Docket No.: HYS-B2CIP/US	:	
For: METHODS AND MATERIALS RELATING TO	:	
NOVEL POLYPEPTIDES AND POLYNUCLEOTIDES	:	

This is a decision on applicants' renewed petition under 37 CFR 1.47(a) and applicants' petition under 37 CFR 1.182, both filed 01 November 2006 in the United States Patent and Trademark Office (USPTO).

BACKGROUND

On 09 July 2003, applicants filed international application PCT/US03/21703, which designated the United States and claims a priority date of 12 July 2002. A copy of the international application was communicated from the International Bureau to the USPTO on 22 January 2004. The thirty-month period for paying the basic national fee in the United States expired at midnight on 12 January 2005.

On 04 January 2005, applicants filed a submission for entry into the national stage in the United States which was accompanied by, *inter alia*, the U.S. Basic National Fee, an assertion of small entity status, and the surcharge under 37 CFR 1.492(h) for filing any of the search fee, the examination fee, or the oath or declaration after the date of the commencement of the national stage.

On 18 August 2005, the United States Designated/Elected Office (DO/EO/US) mailed a NOTIFICATION OF MISSING REQUIREMENTS UNDER 35 U.S.C. 371 (Form PCT/DO/EO/905) indicating, *inter alia*, that an oath or declaration of the inventors in compliance with 37 CFR 1.497(a)-(b) was required.

On 14 October 2005, applicants filed a petition under 37 CFR 1.47(a) which was accompanied by, *inter alia*, a copy of a letter from Renee Polizotto to nonsigning inventor Tom Wehrman, a copy of proof of delivery of a package mailed via Federal Express, copies of e-mails from Renee Polizotto to Tom Wehrman, and copies of e-mail receipts for these e-mails.

On 01 August 2006, a decision was mailed dismissing applicants' petition under 37 CFR 1.47(a) for failure to provide the most recent home address of the nonsigning inventor and for failing to provide an oath or declaration in compliance with 37 CFR 1.497(a)-(b) by each 37 CFR 1.47(a) applicant on his or her own behalf and on behalf of the non-signing joint inventor. Specifically, the decision indicated that there is a difference in names in the last-named inventor between the published international application (Y. Tom Tang) and the declaration of inventors (Yuanhua T. Tang). The decision also indicated that a petition under 37 CFR 1.182 would be required to resolve the matter.

On 01 November 2006, applicants filed a renewed petition under 37 CFR 1.47(a) and a petition under 37 CFR 1.182. The petition under 37 CFR 1.182 was accompanied by the petition fee and a statement from Yuanhua Tang.

DISCUSSION

Petition Under 37 CFR 1.182

The petition fee has been paid. The statement of Yuanhua Tang is accepted. The declaration of inventors filed 14 October 2005 is in compliance with 37 CFR 1.497(a)-(b).

Petition Under 37 CFR 1.47(a)

A petition under 37 CFR 1.47(a) must be accompanied by: (1) the fee under 37 CFR 1.17(h); (2) factual proof that the missing joint inventor refuses to execute the application or cannot be reached after diligent effort; (3) a statement of the last known address of the missing inventor; and (4) an oath or declaration by each 37 CFR 1.47(a) applicant on his or her own behalf and on behalf of the non-signing joint inventor.

As noted in the decision mailed 01 August 2006, items (1) and (2) have been met.

Items (3) and (4) have now been satisfied as well.

CONCLUSION

For the above reasons, applicants' petition under 37 CFR 1.182 is **GRANTED**.

For the above reasons, applicants' renewed petition under 37 CFR 1.47(a) is **GRANTED**.

As provided in 37 CFR 1.47(a), a notice of the filing of this application will be forwarded to non-signing inventor at his last known address of record.

A notice of the filing of the application under 37 CFR 1.47(a) will be published in the Official Gazette.

This application is being forwarded to the National Stage Processing Branch of the Office of PCT Operations to continue national stage processing of the application, including the accordation of a 35 U.S.C. §§371(c)(1), (c)(2), and (c)(4) date of **14 October 2005**.

Daniel Stemmer
Legal Examiner
PCT Legal Affairs
Office of Patent Cooperation Treaty
Legal Administration
Telephone: (571) 272-3301
Facsimile: (571) 273-0459

UNITED STATES PATENT AND TRADEMARK OFFICE

Commissioner for Patents
United States Patent and Trademark Office
P.O. Box 1450
Alexandria, VA 22313-1450
www.uspto.gov

ERICSSON INC.
6300 LEGACY DRIVE
M/S EVR 1-C-11
PLANO TX 75024

COPY MAILED
DEC 26 2007
OFFICE OF PETITIONS

In re Application of
Jorg Ewert et al.
Application No. 10/520,300
Filed: January 5, 2005
Attorney Docket Number: P16776-US1

: DECISION GRANTING PETITION

This is a decision on the petition filed November 26, 2007, under 37 CFR 1.181, to withdraw the holding of abandonment.

The petition is **GRANTED**.

This application became abandoned for failure to timely respond to a Final Office Action mailed February 23, 2007. Accordingly, the Notice of Abandonment was mailed September 27, 2007.

The file record discloses that the Final Office Action was mailed to the address of record. However, petitioner contends that it was not received. A review of the USPTO files reveal that the office communication was returned to the USPTO by the United States Postal Service on March 2, 2007 and no apparent reason can be determined since it appears that the address of record was placed on the correspondence.

In view of the facts set forth in the petition, it is concluded that the Final Office Action was never received. Accordingly, the holding of abandonment is withdrawn. Since no petition fee is due, no petition fee has been charged.

This matter is being referred to Technology Center 2617 for a re-mailing of the Final Office Action, previously mailed February 23, 2007 but not received.

Telephone inquiries related to this decision should be directed to the undersigned Petitions Attorney at (571) 272-3212.

Patricia Faison-Ball

Patricia Faison-Ball
Senior Petitions Attorney
Office of Petitions

UNITED STATES PATENT AND TRADEMARK OFFICE

UNITED STATES DEPARTMENT OF COMMERCE
United States Patent and Trademark Office
Address: COMMISSIONER FOR PATENTS
P.O. Box 1450
Alexandria, Virginia 22313-1450
www.uspto.gov

C. Rachal Winger
c/o OCIP Group
1900 Main Street
Suite 600
Irvine, CA 92614-7319

Mail Date: 04/20/2010

Applicant	: Michael Katze	: DECISION ON REQUEST FOR
Patent Number	: 7588902	: RECALCULATION of PATENT
Issue Date	: 09/15/2009	: TERM ADJUSTMENT IN VIEW
Appliction No	: 10/520,322	: OF WYETH AND NOTICE OF INTENT TO
Filed	: 10/27/2005	: ISSUE CERTIFICATE OF CORRECTION
		:

The Request for Recalculation is **GRANTED** to the extent indicated.

The patent term adjustment has been determined to be **727** days. The USPTO will *sua sponte* issue a certificate of correction reflecting the amount of PTA days determined by the recalculation.

Prior to the issuance of the certificate of correction, the USPTO will afford patentee an opportunity to be heard and request reconsideration. Accordingly, patentee has **one month or thirty (30) days**, whichever is longer, to file a request for reconsideration of this patent term adjustment calculation. See 35 U.S.C. 154(b)(3)(B)(ii) and 37 CFR 1.322(a)(4). No extensions of time will be granted under 37 CFR 1.136.

Patentee should use document code PET.OP if electronically filing a request for reconsideration of this patent term adjustment calculation. The patentee must also include the information required by 37 CFR 1.705(b)(2) and the fee required by 37 CFR 1.18(e). If patentee does not file a timely request for reconsideration of this patent term adjustment calculation including the information required by 37 CFR 1.705(b)(2) and the fee required by 37 CFR 1.18(e), the USPTO will issue a certificate of correction reflecting the PTA determination noted above.

Patentee should be aware that in order to preserve the right to review in the United States District Court for the District of Columbia of the USPTO patent term adjustment determination, patentee must ensure that he or she also take the steps required under 35 U.S.C. 154(b)(4)(A) in a timely manner. Nothing in the request for recalculation should be construed as providing an alternative time frame for commencing a civil action under 35 U.S.C. 154(b)(4)(A).

Any questions concerning this decision should be directed to the Office of Patent Legal Administration at 571-272-7702.

UNITED STATES PATENT AND TRADEMARK OFFICE

Commissioner for Patents
United States Patent and Trademark Office
P.O. Box 1450
Alexandria, VA 22313-1450
www.uspto.gov

MAILED

MAY 14 2010

OFFICE OF PETITIONS

C. Rachal Winger
c/o OCIP Group
1900 Main Street
Suite 600
Irvine CA 92614-7319

In re Patent No. 7,588,902	:	
Issue Date: September 15, 2009	:	
Application No. 10/520,322	:	DECISION ON PETITION
Filed: October 27, 2005	:	
Attorney Docket No. 2066721.00012	:	

This is a decision on the "Petition To Correct Assignee Under 37 CFR § 3.81(b), filed March 4, 2010, requesting correction on the Title Page of the subject patent, via issuance of a Certificate of Correction under 37 CFR 1.323, to add a second assignee's name. A completed Certificate of Correction Form (PTO/SB/44) was submitted with the petition.

The petition under 37 CFR 3.81 is **GRANTED**.

Petitioner urges that the present Petition was submitted to correct the omission of the second assignee's name on the previously submitted PTOL-85B. Accordingly, petitioner requests that a Certificate of Correction (PTO/SB/44) be issued to add the omitted second assignee's name to the Title Page of the Letters Patent.

37 CFR 3.81(b), effective June 25, 2004, reads:

> *After payment of the issue fee:* Any request for issuance of an application in the name of the assignee submitted after the date of payment of the issue fee, and any request for a patent to be corrected to state the name of the assignee, must state that the assignment was submitted for recordation as set forth in § 3.11 before issuance of the patent, and must include a request for a certificate of correction under § 1.323 of this chapter (accompanied by the fee set forth in § 1.20(a) and the processing fee set forth in § 1.17(i) of this chapter.

The requisite $100.00 fee (Fee Code 1811) as set forth under 37 CFR 1.20(a), and the requisite $130.00 processing fee (Fee Code 1464) as set forth under 37 CFR 1.17(i) have been submitted. Further, Office assignment records are consistent with the requested correction. Accordingly, since the Petition complies with the provisions of 37 CFR 3.81(b), it is appropriate for the Office to issue a Certificate of Correction in accordance with the content of the Form PTO/SB/44 that was submitted with the petition.

The file does not indicate a change of address has been submitted, although the address given on the petition differs from the address of record. If appropriate, a change of address should be filed in accordance with MPEP 601.03. A courtesy copy of this decision is being mailed to the address given on the petition; however, the Office will mail all future correspondence solely to the address of record.

Inquiries related this communication should be directed to Cheryl Gibson-Baylor at (571)272-3213.

Any questions concerning the issuance of a Certificate of Correction should be directed to the Certificates of Correction Branch at (571) 272-4200.

This matter is being referred to the Certificates of Correction Branch for processing of a Certificate of Correction in U.S. Patent No. 7,588,902.

Brian W. Brown
Petitions Examiner
Office of Petitions

cc: K&L Gates LLP
925 Fourth Avenue, Suite 2900
Seattle, WA 98104

UNITED STATES PATENT AND TRADEMARK OFFICE

Commissioner for Patents
United States Patent and Trademark Office
P.O. Box 1450
Alexandria, VA 22313-1450
www.uspto.gov

MAILED

MAY 06 2009

OFFICE OF PETITIONS

NXP, B.V.
NXP INTELLECTUAL PROPERTY DEPARTMENT
M/S41-SJ
1109 MCKAY DRIVE
SAN JOSE, CA 95131

In re Application of
Eduard Ferninand Stikvoort, et al.
Application No. 10/520,331
Filed: January 4, 2005
Attorney Docket No. NL02 0622 US

ON PETITION

This is a decision in response to the petition, filed March 10, 2009, to revive the above-identified application under the provisions of 37 CFR 1.137(b).

The petition is **GRANTED**.

The application became abandoned for failure to reply in a timely manner to the non-final Office action mailed August 1, 2008, which set a shortened statutory period for reply of three (3) months. No extension of time under the provisions of 37 CFR 1.136(a) was obtained. Accordingly, the application became abandoned on November 2, 2008. This decision precedes the mailing of a Notice of Abandonment.

The petition satisfies the conditions for revival pursuant to the provisions of 37 CFR 1.137(b) in that petitioner has supplied (1) a proposed reply in the form of an amendment; (2) the petition fee of $1,620; and (3) an adequate statement of unintentional delay.

The application is being referred to Technology Center AU 2611 for appropriate action by the Examiner in the normal course of business on the response filed March 10, 2009.

Telephone inquiries concerning this decision should be directed to the undersigned at (571) 272-3204. Inquiries relating to further prosecution should be directed to the Technology Center.

Sherry D. Brinkley
Petitions Examiner
Office of Petitions

UNITED STATES PATENT AND TRADEMARK OFFICE

Commissioner for Patents
United States Patent and Trademark Office
P.O. Box 1450
Alexandria, VA 22313-1450
www.uspto.gov

HAHN LOESER & PARKS, LLP
ONE GOJO PLAZA
SUITE 300
AKRON OH 44311-1076

COPY MAILED

FEB 0 5 2008

OFFICE OF PETITIONS

In re Application of	:	
Ashkenasi et al.	:	
Application No. 10/520,336	:	DECISION ON PETITION
Filed: January 5, 2005	:	
Attorney Docket No. 117040.00086	:	

This is a decision on the petition under the unintentional provisions of 37 CFR 1.137(b), filed December 18, 2007, to revive the above-identified application.

The petition is **GRANTED**.

The petition satisfies the requirements of 37 CFR 1.137(b) in that petitioner has supplied (1) the reply in the form of an Election, (2) the petition fee, and (3) a proper statement of unintentional delay.

The Revocation of Power of Attorney or Authorization of Agent submitted on January 11, 2007, is hereby not accepted as it does not comply with 37 CFR 3.73(b). 37 CFR 3.73(b) provides that: (1) when an assignee seeks to take action in a matter before the Office, the assignee must establish its ownership of the property to the satisfaction of the Commissioner; (2) ownership is established by submitting to the Office, in the Office file related to the matter in which action is sought to be taken, documentary evidence of a chain of title from the original owner to the assignee (*e.g.*, copy of an executed assignment submitted for recording) or by specifying (*e.g.*, reel and frame number) where such evidence is recorded in the Office; (3) the submission establishing ownership must be signed by a party authorized to act on behalf of the assignee; and (4) documents submitted to establish ownership may be required to be recorded as a condition to permitting the assignee to take action in a matter pending before the Office.

While a courtesy copy of this decision is being mailed to the person signing the instant petition, all future correspondence will be directed solely to the address currently of record until such time as appropriate and proper instructions are received to the contrary.

It is not apparent whether the statement of unintentional delay was signed by a person who would have been in a position of knowing that the entire delay in filing the required reply from the due date for the reply until the filing of a grantable petition pursuant to 37 CFR 1.137(b) was unintentional. Nevertheless, in accordance with 37 CFR 10.18, the statement is accepted as constituting a certification of unintentional delay. However, in the event that petitioner has no knowledge that the delay was unintentional, petitioner must make such an inquiry to ascertain

that, in fact, the delay was unintentional. If petitioner discovers that the delay was intentional, petitioner must notify the Office.

Telephone inquiries concerning this decision should be directed to the undersigned at (571) 272-3206.

This matter is being referred to Technology Center 2883 for further examination on the merits.

Liana Walsh
Petitions Examiner
Office of Petitions

Cc:

CERAMOPTEC INDUSTRIES, INC.
515 SHAKER ROAD
EAST LONDMEADOW, MA 01028

UNITED STATES PATENT AND TRADEMARK OFFICE

UNITED STATES DEPARTMENT OF COMMERCE
United States Patent and Trademark Office
Address: COMMISSIONER FOR PATENTS
P.O. Box 1450
Alexandria, Virginia 22313-1450
www.uspto.gov

KENYON & KENYON LLP
ONE BROADWAY
NEW YORK, NY 10004

Mail Date: 04/21/2010

Applicant	: Alfred Kuttenberger	: DECISION ON REQUEST FOR
Patent Number	: 7616101	: RECALCULATION of PATENT
Issue Date	: 11/10/2009	: TERM ADJUSTMENT IN VIEW
Appliction No	: 10/520,345	: OF WYETH AND NOTICE OF INTENT TO
Filed	: 08/18/2005	: ISSUE CERTIFICATE OF CORRECTION
		:

The Request for Recalculation is **GRANTED** to the extent indicated.

The patent term adjustment has been determined to be **440** days. The USPTO will *sua sponte* issue a certificate of correction reflecting the amount of PTA days determined by the recalculation.

Prior to the issuance of the certificate of correction, the USPTO will afford patentee an opportunity to be heard and request reconsideration. Accordingly, patentee has **one month or thirty (30) days**, whichever is longer, to file a request for reconsideration of this patent term adjustment calculation. See 35 U.S.C. 154(b)(3)(B)(ii) and 37 CFR 1.322(a)(4). No extensions of time will be granted under 37 CFR 1.136.

Patentee should use document code PET.OP if electronically filing a request for reconsideration of this patent term adjustment calculation. The patentee must also include the information required by 37 CFR 1.705(b)(2) and the fee required by 37 CFR 1.18(e). If patentee does not file a timely request for reconsideration of this patent term adjustment calculation including the information required by 37 CFR 1.705(b)(2) and the fee required by 37 CFR 1.18(e), the USPTO will issue a certificate of correction reflecting the PTA determination noted above.

Patentee should be aware that in order to preserve the right to review in the United States District Court for the District of Columbia of the USPTO patent term adjustment determination, patentee must ensure that he or she also take the steps required under 35 U.S.C. 154(b)(4)(A) in a timely manner. Nothing in the request for recalculation should be construed as providing an alternative time frame for commencing a civil action under 35 U.S.C. 154(b)(4)(A).

Any questions concerning this decision should be directed to the Office of Patent Legal Administration at 571-272-7702.

UNITED STATES PATENT AND TRADEMARK OFFICE

UNITED STATES DEPARTMENT OF COMMERCE
United States Patent and Trademark Office
Address: COMMISSIONER FOR PATENTS
P.O. Box 1450
Alexandria, Virginia 22313-1450
www.uspto.gov

MICHAEL BEST & FRIEDRICH LLP
100 E WISCONSIN AVENUE
Suite 3300
MILWAUKEE, WI 53202

Mail Date: 04/21/2010

Applicant	: Hubert Verelst	: DECISION ON REQUEST FOR
Patent Number	: 7603741	: RECALCULATION of PATENT
Issue Date	: 10/20/2009	: TERM ADJUSTMENT IN VIEW
Appliction No	: 10/520,346	: OF WYETH AND NOTICE OF INTENT TO
Filed	: 01/05/2005	: ISSUE CERTIFICATE OF CORRECTION
		:

The Request for Recalculation is **GRANTED** to the extent indicated.

The patent term adjustment has been determined to be **1115** days. The USPTO will *sua sponte* issue a certificate of correction reflecting the amount of PTA days determined by the recalculation.

Prior to the issuance of the certificate of correction, the USPTO will afford patentee an opportunity to be heard and request reconsideration. Accordingly, patentee has **one month or thirty (30) days**, whichever is longer, to file a request for reconsideration of this patent term adjustment calculation. See 35 U.S.C. 154(b)(3)(B)(ii) and 37 CFR 1.322(a)(4). No extensions of time will be granted under 37 CFR 1.136.

Patentee should use document code PET.OP if electronically filing a request for reconsideration of this patent term adjustment calculation. The patentee must also include the information required by 37 CFR 1.705(b)(2) and the fee required by 37 CFR 1.18(e). If patentee does not file a timely request for reconsideration of this patent term adjustment calculation including the information required by 37 CFR 1.705(b)(2) and the fee required by 37 CFR 1.18(e), the USPTO will issue a certificate of correction reflecting the PTA determination noted above.

Patentee should be aware that in order to preserve the right to review in the United States District Court for the District of Columbia of the USPTO patent term adjustment determination, patentee must ensure that he or she also take the steps required under 35 U.S.C. 154(b)(4)(A) in a timely manner. Nothing in the request for recalculation should be construed as providing an alternative time frame for commencing a civil action under 35 U.S.C. 154(b)(4)(A).

Any questions concerning this decision should be directed to the Office of Patent Legal Administration at 571-272-7702.

UNITED STATES PATENT AND TRADEMARK OFFICE

UNITED STATES DEPARTMENT OF COMMERCE
United States Patent and Trademark Office
Address: COMMISSIONER FOR PATENTS
P.O. Box 1450
Alexandria, Virginia 22313-1450
www.uspto.gov

MICHAEL BEST & FRIEDRICH LLP
100 E WISCONSIN AVENUE
Suite 3300
MILWAUKEE, WI 53202

Mail Date: 05/18/2010

Applicant : Hubert Verelst
Patent Number : 7603741
Issue Date : 10/20/2009
Application No : 10/520,346
Filed : 01/05/2005

: NOTICE CONCERNING IMPROPER
: CALCULATION OF PATENT TERM
: ADJUSTMENT BASED UPON USPTO
: IMPROPERLY MEASURING REDUCTION
: PERIOD UNDER 37 CFR 1.704(c)(10).

The United States Patent and Trademark Office (USPTO) discovered that in processing the recent recalculation decisions mailed in response to patentee's filed Request for Recalculation of Patent Term Adjustment in view of Wyeth, the USPTO improperly measured the reduction period for reductions under 37 CFR 1.704(c)(10). Pursuant to 37 CFR 1.704(c)(10), patentee's reduction begins on the date of filing the amendment under 37 CFR 1.312 ("1.312 amendment") or other related paper and ends on the date that the Office mails a response to the filing of the 1.312 amendment or other paper. It has been discovered that during the recalculation, the calculation failed to the limit the reduction to the mail date of the response to the 1.312 amendment or other paper. Accordingly, patentee's reductions were greater than warranted.

This notice **VACATES** the previous GRANTED request for recalculation and provides patentee with a revised GRANTED recalculation.

The patent term adjustment has been determined to be **1165** days. The USPTO will *sua sponte* issue a certificate of correction reflecting the amount of patent term adjustment (PTA) days determined by the recalculation.

Prior to the issuance of the certificate of correction, the USPTO will afford patentee an opportunity to be heard and request reconsideration. Accordingly, patentee has **one month or thirty (30) days** from the mail date of this notice, whichever is longer, to file a request for reconsideration of this PTA calculation. See 35 U.S.C. § 154(b)(3)(B)(ii) and 37 CFR 1.322(a)(4).

Patentee should use document code PET.OP if electronically filing a request for reconsideration of this PTA calculation. The patentee must also include the information required by 37 CFR 1.705(b)(2), and the fee required by 37 CFR 1.18(e). If patentee does not file a timely request for reconsideration of this PTA calculation, including the information required by 37 CFR 1.705(b)(2) and the fee required by 37 CFR 1.18(e), the USPTO will issue a certificate of correction reflecting the PTA determination noted above.

Patentee should be aware that in order to preserve the right of review of the USPTO's PTA determination in the United States District Court for the District of Columbia, patentee must ensure that the steps required under 35 U.S.C. § 154 (b)(4) are taken in a timely manner. Nothing in the request for recalculation should be construed as providing an alternative time frame for commencing a civil action under 35 U.S.C. § 154(b)(4).

29 SEP 2005

UNITED STATES PATENT AND TRADEMARK OFFICE

Commissioner for Patents
United States Patent and Trademark Office
P.O. Box 1450
Alexandria, VA 22313-1450
www.uspto.gov

Vishvas P. Ambardekar
c/o Mr. V.S. AMBARDEKAR
Plot No. B 82 Flat No. 1
Tulshibagwale Colony
Sahakar Nagar N 2
PUNE 411009
India

In re Application of	:	
AMBARDEKAR, Vishvas P.	:	
U.S. Application No.: 10/520,365	:	**DECISION ON**
PCT No.: PCT/IN02/00143	:	**PETITION FOR REVIVAL**
Int. Filing Date: 02 July 2002	:	**UNDER 37 CFR 1.137(b)**
Priority Date: None	:	
Attorney Docket No.: None	:	
For: ECCENTRIC GEARBOX	:	

This decision is in response to the "Petition for Revival of an Application Abandoned Unintentionally Under 37 CFR 1.137(b)" filed 10 August 2005.

BACKGROUND

On 06 January 2005, applicants filed a transmittal letter for entry into the national stage in the United States under 35 U.S.C. 371 of international application PCT/IN02/00143.

On 22 July 2005, the United States Designated/Elected Office (DO/EO/US) mailed a Notification of Acceptance of Application Under 35 U.S.C. 371 and 37 CFR 1.495 (Form PCT/DO/EO/903) indicating that the date of completion of all 35 U.S.C. 371 requirements was 06 January 2005.

On 10 August 2005, applicants filed a petition to revive under 37 CFR 1.137(b) which was accompanied by, *inter alia*, the $65.00 surcharge fee.

DISCUSSION

Application is Abandoned

A review of the above-captioned application file reveals that the original papers were not received until 06 January 2005 which is more than thirty months from the earliest claimed priority date.

Accordingly, the above-captioned application is hereby abandoned for failure to timely pay the basic national fee. *See* 37 CFR 1.495(h).

The Notification of Acceptance of Application Under 35 U.S.C. 371 and 37 CFR 1.495 (Form PCT/DO/EO/903) mailed 22 July 2005 is hereby **VACATED**.

Petition to Revive Under 37 CFR 1.137(b)

In the response filed 10 August 2005, applicant submitted a petition to revive under 37 CFR 1.137(b) which is hereby **GRANTED** as follows:

The basic national fee and petition fee have been paid. Applicant included the statement that "[t]he entire delay in filing the required reply from the due date for the reply until the filing of a grantable petition under 37 CFR 1.137(b) was unintentional." A terminal disclaimer is not required. Accordingly, all requirements under 37 CFR 1.137(b) have been satisfied.

Applicant included the surcharge fee of $65.00 for late filing of the declaration with the subject petition.

Applicant has completed the requirements for acceptance under 35 U.S.C. 371(c). The application has an international filing date of 02 July 2002 under 35 U.S.C. 363 and a 35 U.S.C. 371(c)(1), (c)(2) and (c)(4) date of 10 August 2005.

This application is being forwarded to the National Stage Processing Division of the Office of PCT Operations for continued processing.

James Thomson
Attorney Advisor
Office of PCT Legal Administration

Tel.: (571) 272-3302

UNITED STATES PATENT AND TRADEMARK OFFICE

COMMISSIONER FOR PATENTS
UNITED STATES PATENT AND TRADEMARK OFFICE
P.O. BOX 1450
ALEXANDRIA, VA 22313-1450
www.uspto.gov

13 MAR 2007

OLIFF & BERRIDGE, PLC
P.O. BOX 19928
ALEXANDRIA, VA 22320

In re Application of HOLMES et al	:	
U.S. Application No.: 10/520,368	:	
PCT Application No.: PCT/GB2002/003174	:	
Int. Filing Date: 10 July 2002	:	DECISION
Priority Date Claimed: (none)	:	
Attorney Docket No.: 122347	:	
For: OPTICALLY VARIABLE SECURITY	:	
DEVICE	:	

This is in response to applicant's "Petition Under 37 C.F.R. §1.47(a)" filed 28 June 2006.

BACKGROUND

On 10 July 2002, applicant filed international application PCT/GB2002/003174. A copy of the international application was communicated to the USPTO from the International Bureau on 22 January 2004. The thirty-month period for paying the basic national fee in the United States expired on 10 January 2005.

On 06 January 2005, applicant filed national stage papers in the United States Designated/Elected Office (DO/EO/US). The submission was accompanied by, *inter alia*, the basic national fee required by 35 U.S.C. 371(c)(1).

On 03 May 2006, the DO/EO/US mailed a Notification of Missing Requirements Under 35 U.S.C. 371 (Form PCT/DO/EO/905), which indicated that an oath or declaration in compliance with 37 CFR 1.497 must be filed.

On 28 June 2006, applicant filed the present petition under 37 CFR 1.47(a) along with an executed declaration.

DISCUSSION

A petition under 37 CFR 1.47(a) must be accompanied by: (1) an oath or declaration by each applicant on his or her own behalf and on behalf of the nonsigning joint inventors, (2)

factual proof that the missing joint inventors refuse to join in the application or cannot be reached after diligent effort, (3) the fee set forth in §1.17(i), and (4) the last known addresses of the nonsigning joint inventors.

With regard to item (1) above, applicant has submitted a declaration signed by the available inventor on his own behalf and on behalf of the nonsigning inventor.

With regard to item (2) above, MPEP 409.03(d) states in relevant part,

> Where inability to find or reach a nonsigning inventor "after diligent effort" is the reason for filing under 37 CFR 1.47, an affidavit or declaration of facts should be submitted which fully describes the exact facts which are relied on to establish that a diligent effort was made. . . . The affidavit or declaration of facts must be signed, where at all possible, by a person having firsthand knowledge of the facts recited therein. Statements based on hearsay will not normally be accepted. Copies of documentary evidence such as certified mail return receipt, cover letter of instructions, telegrams, etc., that support a finding that the nonsigning inventor could not be found or reached should be made part of the affidavit or declaration. It is important that the affidavit or declaration contain statements of fact as opposed to conclusions.
>
> * * *
>
> Where a refusal to sign the application papers is alleged, the circumstances of this refusal must be specified in an affidavit or declaration by the person to whom the refusal was made. Statements by a party not present when an oral refusal is made will not be accepted.
>
> Before a refusal can be alleged, it must be demonstrated that a bona fide attempt was made to present a copy of the application papers (specification, including claims, drawings, and oath or declaration) to the nonsigning inventor for signature. A copy of the application papers should be sent to the last known address of the nonsigning inventor, or, if the nonsigning inventor is represented by counsel, to the address of the nonsigning inventor's attorney.
>
> When there is an express oral refusal, that fact along with the time and place of the refusal must be stated in the affidavit or declaration. When there is an express written refusal, a copy of the document evidencing that refusal must be made part of the affidavit or declaration.
>
> When it is concluded by the 37 CFR 1.47 applicant that a nonsigning inventor's conduct constitutes a refusal, all facts upon which that conclusion is based should be stated in the affidavit or declaration. If there is documentary evidence to support facts alleged in the affidavit or declaration, such evidence should be submitted. Whenever a nonsigning inventor gives a reason for refusing to sign the application oath or declaration, that reason should be stated in the affidavit or declaration.

The petition states that joint inventor Kenneth Drinkwater is considered unavailable after diligent effort. However, as evidenced by the certified mail receipt, Dr. Drinkwater was located at his last known address of record when he signed for the letter dated 27 January 2005. Thus, it cannot be concluded that Dr. Drinkwater cannot be found after diligent effort. Applicant is entitled to allege that Dr. Drinkwater refuses to sign the application papers, but no such claim has been made. It is noted that that the 27 January 2005 letter did not specify any due date for response and therefor would not alone serve as an adequate showing of a refusal to sign.

With regard to item (3) above, applicant has provided the requisite petition fee.

With regard to item (4) above, the petition states the last known address of the nonsigning inventor.

CONCLUSION

For the reasons above, the petition under 37 CFR 1.47(a) is DISMISSED without prejudice.

If reconsideration on the merits of this petition is desired, a proper response must be filed within TWO (2) MONTHS from the mail date of this decision. Extensions of time are available under 37 CFR 1.136(a). Any reconsideration request should include a cover letter entitled "Renewed Petition Under 37 CFR 1.47(a)". No additional petition fee is required.

Please direct further correspondence with respect to this matter to Mail Stop PCT, Commissioner for Patents, Office of PCT Legal Administration, P.O. Box 1450, Alexandria, Virginia 22313-1450, with the contents of the letter marked to the attention of the Office of PCT Legal Administration.

Bryan Lin

Bryan Lin
PCT Legal Examiner
PCT Legal Office

Telephone: 571-272-3303
Facsimile: 571-273-0459

2 5 OCT 2007

UNITED STATES PATENT AND TRADEMARK OFFICE

COMMISSIONER FOR PATENTS
UNITED STATES PATENT AND TRADEMARK OFFICE
P.O. BOX 1450
ALEXANDRIA, VA 22313-1450
www.uspto.gov

OLIFF & BERRIDGE, PLC
P.O. BOX 19928
ALEXANDRIA, VA 22320

In re Application of HOLMES et al	:	
U.S. Application No.: 10/520,368	:	
PCT Application No.: PCT/GB2002/003174	:	
Int. Filing Date: 10 July 2002	:	DECISION
Priority Date Claimed: (none)	:	
Attorney Docket No.: 122347	:	
For: OPTICALLY VARIABLE SECURITY DEVICE	:	

This is in response to applicant's "Response to Decision" filed 13 September 2007, which is being treated under 37 CFR 1.497(d).

BACKGROUND

On 10 July 2002, applicant filed international application PCT/GB2002/003174. A copy of the international application was communicated to the USPTO from the International Bureau on 22 January 2004. The thirty-month period for paying the basic national fee in the United States expired on 10 January 2005.

On 06 January 2005, applicant filed national stage papers in the United States Designated/Elected Office (DO/EO/US). The submission was accompanied by, *inter alia*, the basic national fee required by 35 U.S.C. 371(c)(1).

On 03 May 2006, the DO/EO/US mailed a Notification of Missing Requirements Under 35 U.S.C. 371 (Form PCT/DO/EO/905), which indicated that an oath or declaration in compliance with 37 CFR 1.497 must be filed.

On 28 June 2006, applicant filed a petition under 37 CFR 1.47(a) along with an executed declaration.

On 13 March 2007, this Office mailed a decision dismissing the 28 June 2006 petition.

On 05 September 2007, the DO/EO/US mailed a Notice of Acceptance of Application Under 35 U.S.C. 371 (Form PCT/DO/EO/903).

On 13 September 2007, applicant filed the present petition under 37 CFR 1.497(d).

DISCUSSION

37 CFR 1.497(d) states,

> If the oath or declaration filed pursuant to 35 U.S.C. 371(c)(4) and this section names an inventive entity different from the inventive entity set forth in the international application, or if a change to the inventive entity has been effected under PCT Rule 92bis subsequent to the execution of any oath or declaration which was filed in the application under PCT Rule 4.17(iv) or this section and the inventive entity thus changed is different from the inventive entity identified in any such oath or declaration, applicant must submit:
>
> (1) A statement from each person being added as an inventor and from each person being deleted as an inventor that any error in inventorship in the international application occurred without deceptive intention on his or her part;
>
> (2) The processing fee set forth in § 1.17(i); and
>
> (3) If an assignment has been executed by any of the original named inventors, the written consent of the assignee (see § 3.73(b) of this chapter); and
>
> (4) Any new oath or declaration required by paragraph (f) of this section.

With regard to item (1) above, the requisite statement has not been provided.

With regard to item (2) above, the requisite $130.00 processing fee will be charged to Deposit Account No. 15-0461.

With regard to item (3) above, the petition fails to state whether an assignment has been executed by any of the original inventors. If such an assignment exists, written consent of the assignee must be provided, and proof of ownership of the assignee must be established. See 37 CFR 3.73(b).

With regard to item (4) above, the requisite new declaration has been provided.

CONCLUSION

For the reasons above, the petition under 37 CFR 1.497(d) is DISMISSED without prejudice.

The Notice of Acceptance of Application Under 35 U.S.C. 371 (Form PCT/DO/EO/903) mailed 05 September 2007 is hereby VACATED.

If reconsideration on the merits of the petition is desired, a proper response must be filed within TWO (2) MONTHS from the mail date of this decision. Extensions of time are available under 37 CFR 1.136(a). Any reconsideration request should include a cover letter entitled "Renewed Petition Under 37 CFR 1.497(d)". No additional petition fee is required.

Please direct further correspondence with respect to this matter to Mail Stop PCT, Commissioner for Patents, Office of PCT Legal Administration, P.O. Box 1450, Alexandria, Virginia 22313-1450, with the contents of the letter marked to the attention of the Office of PCT Legal Administration.

Bryan Lin

Bryan Lin
PCT Legal Examiner
PCT Legal Office

Telephone: 571-272-3303
Facsimile: 571-273-0459

2 6 FEB 2008

UNITED STATES PATENT AND TRADEMARK OFFICE

COMMISSIONER FOR PATENTS
UNITED STATES PATENT AND TRADEMARK OFFICE
P.O. BOX 1450
ALEXANDRIA, VA 22313-1450
www.uspto.gov

OLIFF & BERRIDGE, PLC
P.O. BOX 19928
ALEXANDRIA, VA 22320

In re Application of HOLMES et al	:	
U.S. Application No.: 10/520,368	:	
PCT Application No.: PCT/GB2002/003174	:	
Int. Filing Date: 10 July 2002	:	DECISION
Priority Date Claimed: (none)	:	
Attorney Docket No.: 122347	:	
For: OPTICALLY VARIABLE SECURITY DEVICE	:	

This is in response to applicant's "Renewed Petition Under 37 C.F.R. §1.497(d)" filed 12 February 2008.

BACKGROUND

On 10 July 2002, applicant filed international application PCT/GB2002/003174. A copy of the international application was communicated to the USPTO from the International Bureau on 22 January 2004. The thirty-month period for paying the basic national fee in the United States expired on 10 January 2005.

On 06 January 2005, applicant filed national stage papers in the United States Designated/Elected Office (DO/EO/US). The submission was accompanied by, *inter alia*, the basic national fee required by 35 U.S.C. 371(c)(1).

On 03 May 2006, the DO/EO/US mailed a Notification of Missing Requirements Under 35 U.S.C. 371 (Form PCT/DO/EO/905), which indicated that an oath or declaration in compliance with 37 CFR 1.497 must be filed.

On 28 June 2006, applicant filed a petition under 37 CFR 1.47(a) along with an executed declaration.

On 13 March 2007, this Office mailed a decision dismissing the 28 June 2006 petition.

On 05 September 2007, the DO/EO/US mailed a Notice of Acceptance of Application Under 35 U.S.C. 371 (Form PCT/DO/EO/903).

On 13 September 2007, applicant filed a petition under 37 CFR 1.497(d).

On 25 October 2007, this Office mailed a decision dismissing the 13 September 2007 petition.

On 12 February 2008, applicant filed the present renewed petition under 37 CFR 1.497(d).

DISCUSSION

37 CFR 1.497(d) states,

> If the oath or declaration filed pursuant to 35 U.S.C. 371(c)(4) and this section names an inventive entity different from the inventive entity set forth in the international application, or if a change to the inventive entity has been effected under PCT Rule 92bis subsequent to the execution of any oath or declaration which was filed in the application under PCT Rule 4.17(iv) or this section and the inventive entity thus changed is different from the inventive entity identified in any such oath or declaration, applicant must submit:
>
> (1) A statement from each person being added as an inventor and from each person being deleted as an inventor that any error in inventorship in the international application occurred without deceptive intention on his or her part;
>
> (2) The processing fee set forth in § 1.17(i); and
>
> (3) If an assignment has been executed by any of the original named inventors, the written consent of the assignee (see § 3.73(b) of this chapter); and
>
> (4) Any new oath or declaration required by paragraph (f) of this section.

Applicant has previously satisfied items (2) and (4) above.

With regard to item (1) above, the renewed petition includes an appropriate statement from the person being deleted as an inventor.

With regard to item (3) above, proper written consent of the assignee De La Rue International Limited has not been provided. In particular, the person signing the statement of consent neither has apparent authority to sign on behalf of the assignee nor states that he is authorized to act on behalf of the assignee. See MPEP 324, Section V. Additionally, the statement refers to "De La Rue, PLC" rather than De La Rule International Limited, which is listed on the recorded assignment.

CONCLUSION

For the reasons above, the renewed petition under 37 CFR 1.497(d) is DISMISSED without prejudice.

If reconsideration on the merits of the petition is desired, a proper response must be filed within TWO (2) MONTHS from the mail date of this decision. Extensions of time are available under 37 CFR 1.136(a). Any reconsideration request should include a cover letter entitled "Renewed Petition Under 37 CFR 1.497(d)". No additional petition fee is required.

Please direct further correspondence with respect to this matter to Mail Stop PCT, Commissioner for Patents, Office of PCT Legal Administration, P.O. Box 1450, Alexandria, Virginia 22313-1450, with the contents of the letter marked to the attention of the Office of PCT Legal Administration.

Bryan Lin

Bryan Lin
PCT Legal Examiner
PCT Legal Office

Telephone: 571-272-3303
Facsimile: 571-273-0459

30 AUG 2005

UNITED STATES PATENT and TRADEMARK OFFICE

COMMISSIONER FOR PATENTS
UNITED STATES PATENT AND TRADEMARK OFFICE
P.O BOX 1450
ALEXANDRIA, VA 22313-1450
www.uspto.gov

Kenneth I. Kohn
Kohn & Associates, PLLC
30500 Northwestern Hwy., Suite 410
Farmington Hills, Michigan 48334

In re Application of	:	DECISION ON
Shmuel, ORENBUCH	:	
Application No.: 10/520,381	:	
PCT No.: PCT/IB03/01518	:	
Int. Filing Date: 06 March 2003	:	PETITION UNDER
Priority Date: 06 March 2002	:	
Attorney's Docket No.: 3137.00011	:	
For: SPHERICAL MOBILITY MECHANISM	:	37 CFR 1.137(b)

This decision is in response to applicants' "Petition For Revival Of An International Application For Patent Designating The U.S. Abandoned Unintentionally Under 37 CFR 1.137(b)," filed on 04 January 2005.

BACKGROUND

On 06 March 2003, this international application was filed, claiming an earliest priority date of 06 March 2002.

The deadline for paying the basic national fee in the United States under 35 U.S.C. 371 and 37 CFR 1.495 was 06 September 2004. This international application became abandoned with respect to the United States at midnight on 06 September 2004 for failure to pay the required basic national fee.

On 04 January 2005, applicants filed the instant petition under 37 CFR 1.137(b) and Transmittal letter for entry into the national stage in the United States, which was accompanied by the basic national fee, an unexecuted declaration and the petition fee.

DISCUSSION

A grantable petition to revive an abandoned application under 37 CFR 1.137(b) must be accompanied by (1) the required reply, unless previously filed. In a nonprovisional application abandoned for failure to prosecute, the required reply may be met by the filing of a continuing application; (2) the petition fee as set forth in § 1.17(m); and (3) a statement that the entire delay in filing the required reply from the due date for the reply until the filing of a grantable petition pursuant to this paragraph was unintentional. The Commissioner may require additional information where there is a question whether the delay was unintentional; and (4) any terminal disclaimer (and fee as set forth in § 1.20 (d)) required pursuant to paragraph (c) of this section.

Petitioner has provided: (1) the proper reply by submitting the basic national filing fee, (2) the petition fee set forth in §1.17(m) and (3) the proper statement under 137(b)(3). In this application, no terminal disclaimer is required.

Accordingly, the petition is deemed to satisfy requirements (1), (2), (3), and (4) under 37 CFR 1.137(b).

DECISION

The petition under 37 CFR 1.137(b) is **GRANTED**.

This application is being returned to the United States Designated/Elected Office (DO/EO/US) for continued processing.

Rafael Bacares
PCT Legal Examiner
PCT Legal Office
Telephone: (571) 272-3276
Facsimile: (571) 273-0459

UNITED STATES PATENT AND TRADEMARK OFFICE

Commissioner for Patents
United States Patent and Trademark Office
P.O. Box 1450
Alexandria, VA 22313-1450
www.uspto.gov

FROST BROWN TODD, LLC
2200 PNC CENTER
201 E. FIFTH STREET
CINCINNATI, OH 45202

COPY MAILED
AUG 22 2008

In re Application of	:	
Rita Boge Andersen, et. al.	:	
Application No. 10/520,387	:	DECISION ON PETITION
Filed: December 19, 2005	:	
Attorney Docket No. 0114229/0556832	:	

This is a decision on the petition under the unintentional provisions of 37 CFR 1.137(b), filed August 6, 2008, to revive the above-identified application.

The petition is **GRANTED**.

The application became abandoned for failure to reply in a timely manner to the Non-Final Rejection mailed, February 5, 2008, which set a shortened statutory period for reply of three (3) months. No extensions of time under the provisions of 37 CFR 1.136 (a) were obtained. Accordingly, the application became abandoned on May 6, 2008.

The petition satisfies the requirements of 37 CFR 1.137(b) in that petitioner has supplied (1) the reply in the form of an Amendment After Non-Final Rejection, (2) the petition fee of $1540, and (3) a proper statement of unintentional delay.

Telephone inquiries concerning this decision should be directed to Denise Williams at (571) 272-8930.

This application is being referred to Technology Center AU 1794 for appropriate action by the Examiner in the normal course of business on the reply received.

Andrea Smith
Petitions Examiner
Office of Petitions

SPE RESPONSE FOR CERTIFICATE OF CORRECTION

Paper No.: —

DATE : 10/8/08

TO SPE OF : ART UNIT 2856

SUBJECT : Request for Certificate of Correction for Appl. No.: 10/520390 Patent No.: 7249508 B2

Please respond to this request for a certificate of correction within 7 days.

FOR IFW FILES:

Please review the requested changes/corrections as shown in the **COCIN** document(s) in the IFW application image. No new matter should be introduced, nor should the scope or meaning of the claims be changed.

Please complete the response (see below) and forward the completed response to scanning using document code **COCX**.

FOR PAPER FILES:

Please review the requested changes/corrections as shown in the attached certificate of correction. Please complete this form (see below) and forward it with the file to:

Certificates of Correction Branch (CofC)
South Tower - 9A22
Palm Location 7580

Virginia Tolbert
Certificates of Correction Branch
703-308-9390 ext. 113

Thank You For Your Assistance

The request for issuing the above-identified correction(s) is hereby:
Note your decision on the appropriate box.

- [X] **Approved** — All changes apply.
- [ ] **Approved in Part** — Specify below which changes **do not** apply.
- [ ] **Denied** — State the reasons for denial below.

Comments:

O.K. to enter.
HZ 10/30/08

HEZRON WILLIAMS
~~SUPERVISORY PATENT EXAMINER~~
TECHNOLOGY CENTER 2800

Hezron Williams
SPE

2856
Art Unit

23 SEP 2005

UNITED STATES PATENT AND TRADEMARK OFFICE

Commissioner for Patents
United States Patent and Trademark Office
P.O. Box 1450
Alexandria, VA 22313-1450
www.uspto.gov

Charles E. Stewart
Shell Oil Company
Intellectual Property
PO Box 2463
Houston, TX 77252-2463

In re Application of	:	
STIL, Jacob Hendrik	:	
Application No.: 10/520,400	:	DECISION
PCT No.: PCT/EP02/07365	:	
Int. Filing Date: 02 July 2002	:	ON PETITION UNDER
Priority Date: None	:	
Docket No.: TS1285US	:	37 CFR 1.137(b)
For: METHOD OF GASIFICATION ...	:	
SUCH A METHOD	:	

Applicants' "Petition For Revival of an International Application For Patent Designating the U.S. Abandoned Unintentionally Under 37 CFR 1.137(b)," filed in the above-captioned application on 05 January 2005 is **GRANTED**.

Applicants state "the entire delay in filing the required reply from the due date for the required reply until the filing of a grantable petition under 37 CFR 1.137(b) was unintentional," as required by 37 CFR 1.137(b)(3). The appropriate national fee and petition fee have been submitted. A terminal disclaimer is not required as the application was filed on or after 08 June 1995. Accordingly, all requirements under 37 CFR 1.137(b) have been satisfied.

The declaration of the inventor complies with 37 CFR 1.497(a)-(b).

This application is being forwarded to the National Stage Processing Branch of the Office of PCT Operations for continued processing in accordance with this decision. The fees for late filing of the oath or declaration and for late furnishing of the translation will be charged to deposit account no. 19-1800, as authorized. The application has a 35 U.S.C. §371(c)(1), (c)(2) and (c)(4) date of 05 January 2005.

Erin P. Thomson

Erin P. Thomson
Attorney Advisor
PCT Legal Administration

Telephone: 571-272-3292
Facsimile: 571-273-0459

UNITED STATES PATENT AND TRADEMARK OFFICE

UNITED STATES DEPARTMENT OF COMMERCE
United States Patent and Trademark Office
Address: COMMISSIONER FOR PATENTS
P.O. Box 1450
Alexandria, Virginia 22313-1450
www.uspto.gov

FULBRIGHT & JAWORSKI L.L.P.
600 CONGRESS AVE.
SUITE 2400
AUSTIN, TX 78701

Mail Date: 04/21/2010

Applicant	: Thomas P. Quinn	: DECISION ON REQUEST FOR
Patent Number	: 7585509	: RECALCULATION of PATENT
Issue Date	: 09/08/2009	: TERM ADJUSTMENT IN VIEW
Appliction No	: 10/520,408	: OF WYETH AND NOTICE OF INTENT TO
Filed	: 05/17/2005	: ISSUE CERTIFICATE OF CORRECTION
		:

The Request for Recalculation is **GRANTED** to the extent indicated.

The patent term adjustment has been determined to be **374** days. The USPTO will *sua sponte* issue a certificate of correction reflecting the amount of PTA days determined by the recalculation.

Prior to the issuance of the certificate of correction, the USPTO will afford patentee an opportunity to be heard and request reconsideration. Accordingly, patentee has **one month or thirty (30) days**, whichever is longer, to file a request for reconsideration of this patent term adjustment calculation. See 35 U.S.C. 154(b)(3)(B)(ii) and 37 CFR 1.322(a)(4). No extensions of time will be granted under 37 CFR 1.136.

Patentee should use document code PET.OP if electronically filing a request for reconsideration of this patent term adjustment calculation. The patentee must also include the information required by 37 CFR 1.705(b)(2) and the fee required by 37 CFR 1.18(e). If patentee does not file a timely request for reconsideration of this patent term adjustment calculation including the information required by 37 CFR 1.705(b)(2) and the fee required by 37 CFR 1.18(e), the USPTO will issue a certificate of correction reflecting the PTA determination noted above.

Patentee should be aware that in order to preserve the right to review in the United States District Court for the District of Columbia of the USPTO patent term adjustment determination, patentee must ensure that he or she also take the steps required under 35 U.S.C. 154(b)(4)(A) in a timely manner. Nothing in the request for recalculation should be construed as providing an alternative time frame for commencing a civil action under 35 U.S.C. 154(b)(4)(A).

Any questions concerning this decision should be directed to the Office of Patent Legal Administration at 571-272-7702.

18 JUL 2005

UNITED STATES PATENT AND TRADEMARK OFFICE

COMMISSIONER FOR PATENTS
UNITED STATES PATENT AND TRADEMARK OFFICE
P.O. BOX 1450
ALEXANDRIA, VA 22313-1450
www.uspto.gov

Richard J Minnich
Fay, Sharpe, Fagan, Minnich & McKee, LLP
1100 Superior Avenue, 7th Floor
Cleveland, OH 44114

In re Application of SRINIVASAN, Sarangapani Application No.: 10/520,410 PCT No.: PCT/US02/39680 Int. Filing Date: 11 December 2002 Priority Date: 12 December 2001 Docket No.: BVK 200009US For: OXYGEN PRODUCING DEVICE FOR WOUNDCARE	DECISION ON PETITION UNDER 37 CFR 1.137(b)

Applicant's "Petition For Revival of an International Application For Patent Designating the U.S. Abandoned Unintentionally Under 37 CFR 1.137(b)," filed in the above-captioned application on 04 January 2005 is **GRANTED**.

Applicant's statement that "the entire delay in filing the required reply from the due date for the required reply until the filing of a grantable petition under 37 CFR 1.137(b) was unintentional," satisfies 37 CFR 1.137(b)(3). The petition fee and basic national fee have been submitted. A terminal disclaimer is not required as the application was filed on or after 08 June 1995. Accordingly, all requirements under 37 CFR 1.137(b) have been satisfied.

A signed oath or declaration has not yet been submitted.

This application is being forwarded to the National Stage Processing Branch of the Office of PCT Operations for continued processing in accordance with this decision, including the mailing of a Notification of Missing Requirements (Form PCT/DO/EO/905) indicating that an oath or declaration in compliance with 37 CFR 1.497(a)-(b) and the surcharge for late filing of the oath or declaration are required.

Erin P. Thomson

Erin P. Thomson
Attorney Advisor
PCT Legal Administration

Telephone: 571-272-3292
Facsimile: 571-273-0459

UNITED STATES PATENT AND TRADEMARK OFFICE

UNITED STATES DEPARTMENT OF COMMERCE
United States Patent and Trademark Office
Address: COMMISSIONER FOR PATENTS
P.O. Box 1450
Alexandria, Virginia 22313-1450
www.uspto.gov

APPLICATION NO.	FILING DATE	FIRST NAMED INVENTOR	ATTORNEY DOCKET NO.	CONFIRMATION NO.
10/520,433	09/21/2005	Takuji Himeno	450100-04676	9864

EXAMINER
ATALA, JAMIE JO

ART UNIT	PAPER NUMBER
2621	

MAIL DATE	DELIVERY MODE
09/03/2009	PAPER

7590 09/03/2009

William S Frommer
Frommer Lawrence & Haug
745 Fifth Avenue
New York, NY 10151

DECISION DISMISSING PETITION UNDER 37 CFR 1.138(d)

The declaration of express abandonment will not be recognized

This is in response to the petition under 37 CFR 1.138(d), requesting for a refund of any previously paid search fee and excess claims fee in the above-identified application.

The petition is dismissed.

The express abandonment will **not** be recognized for the reason(s) indicated below:

1. ☐ The petition was not filed in sufficient time to permit the appropriate officials to recognize the abandonment before an examination has been made of the application. See 37 CFR 1.138(d).
2. ☐ The petition was not signed by a party authorized by 37 CFR 1.33(b)(1), (3) or (4).
3. ☑ The application is not an application filed under 35 U.S.C. 111(a) on or after December 8, 2004.
4. ☐ The petition for express abandonment under 1.138(d) is dismissed because the applicant did not pay any search fee and excess claims fees in the above-identified application.

Telephone inquiries should be directed to the Office of Data Management at (571) 272-4200.

Mimi Farmer

Patent Publication Branch
Office of Data Management

FORM PET651D (Rev. 08/07)

30 JUN 2006

UNITED STATES PATENT AND TRADEMARK OFFICE

Commissioner for Patents
United States Patent and Trademark Office
P.O. Box 1450
Alexandria, VA 22313-1450
www.uspto.gov

Knobbe, Martens, Olson, & Bear, LLP
2040 Main Street
Fourteenth Floor
Irvine, CA 92614

In re Application of KINGSLAND et al. Application No.: 10/520,436 PCT No.: PCT/GB03/02928 Int. Filing: 07 July 2003 Priority Date: 10 July 2002 Attorney Docket No.: FDEHN7.002APC For: PROCESSED FOR THE PREPARATION OF FIBRINOGEN	:	DECISION ON PETITION

This decision is issued in response to applicants' "Petition under 37 CFR 1.47(a)" filed 27 February 2006 to accept the application without the signature of joint inventor, Robert Clemmitt. The requisite $200 petition fee has been submitted.

BACKGROUND

On 07 July 2003, applicants filed international application PCT/GB03/02928, which claimed a priority date 10 July 2002. A copy of the international application was communicated to the United States Patent and Trademark Office from the International Bureau on 22 January 2004. Pursuant to 37 CFR 1.495, the period for paying the basic national fee in the United States expired 30 months from the priority date, 10 January 2005.

On 05 January 2005, applicants filed a transmittal for entry into the national stage in the United States, which accompanied by, inter alia: the requisite basic national fee as required by 35 U.S.C. 371(c)(1); a copy of the international application; and a preliminary amendment.

On 28 October 2005, the United Stated Designated/Elected Office mailed a Notification of Missing Requirements under 35 U.S.C. 371 (Form PCT/DO/EO/905) indicating that an oath or declaration in compliance with 37 CFR 1.497(a) and (b) must be filed. The notification set a two-month time limit in which to respond.

On 27 February 2006, applicants filed the present petition under 37 CFR 1.47(a).

DISCUSSION

A petition under 37 CFR 1.47(a) must be accompanied by (1) the fee under 37 CFR 1.17(h), (2) factual proof that the missing joint inventor refuses to execute the application or cannot be reached after diligent effort, (3) a statement of the last known address of the missing inventor, and (4) an oath or declaration by each 37 CFR 1.47(a) applicant on his or her own behalf and behalf of the nonsigning joint inventor. Items (1) and (4) have been satisfied.

Regarding item (2) above, petitioner states that Robert Clemmitt cannot be found or reached after diligent effort. Section 409.03(d) of the Manual of Patent Examining Procedure (M.P.E.P.), **Proof of Unavailability or Refusal**, states, in part:

> Where inability to find or reach a nonsigning inventor "after diligent effort" is the reason for filing under 37 CFR 1.47, a statement of facts should be submitted that fully describes the exact facts which are relied on to establish that a diligent effort was made. The fact that a nonsigning inventor is on vacation or out of town and is therefore temporarily unavailable to sign the declaration is not an acceptable reason for filing under 37 CFR 1.47.
>
> The statement of facts must be signed, where at all possible, by a person having firsthand knowledge of the facts recited therein. Statements based on hearsay will not normally be accepted. Copies of documentary evidence such as internet searches, certified mail return receipts, cover letters of instructions, telegrams, that support a finding that the nonsigning inventor could not be found or reached should be made part of the statement. The steps taken to locate the whereabouts of the nonsigning inventor should be included in the statement of facts. It is important that the statement contain facts as opposed to conclusions.

A review of the present petition reveals that applicants have not provided an acceptable showing that a diligent effort was made to reach the nonsigning inventor, Robert Clemmitt. The Declaration of Peter Feldman states that "I have made several unsuccessful attempts to reach Robert Clemmitt . . . " However, declarant has not provided documentary evidence to support the unsuccessful attempts. Were the numerous e-mails or letter dated 09 January 2006 returned as undeliverable? Further, it appears that the application papers were mailed to Mr. Clemmitt's corporate address. In this situation, the application papers should be submitted to the inventor at his last known home address to insure receipt. Lastly, applicant must show that alternative means were employed, such as a search of telephone and/or Internet directories, in an attempt to locate the whereabouts of Mr. Clemmitt.

Regarding item (3) above, a clear statement of the last known address of the nonsigning inventor has not been provided. In situations where an inventor does not execute the oath or declaration, the inventor's most recent home address must be given to

enable the Office to communicate directly with the inventor as necessary. (See MPEP §605.03)

For the above reasons, it would not be appropriate to accept this application without the signature of Robert Clemmitt at this time.

CONCLUSION

The petition under 37 CFR 1.47(a) is **DISMISSED** without prejudice.

If reconsideration on the merits of this petition is desired, a proper response must be filed within **TWO (2) MONTH** from the mail date of this decision. Any reconsideration request should include a cover letter entitled "Renewed Petition Under 37 CFR 1.47(a)." No additional petition fee is required.

Any further correspondence with respect to this matter should be addressed to: Mail Stop PCT, Commissioner for Patents, Office of PCT Legal Administration, P.O. Box 1450, Alexandria, Virginia 22313-1450, with the contents of the letter marked to the attention of the Office of PCT Legal Administration.

Anthony Smith
Attorney-Advisor
Office PCT Legal Administration
Tel.: 571-272-3298
Facsimile: 571-273-0459

#8

UNITED STATES PATENT AND TRADEMARK OFFICE

Commissioner for Patents
United States Patent and Trademark Office
P.O. Box 1450
Alexandria, VA 22313-1450
www.uspto.gov

25 AUG 2006

Knobbe, Martens, Olson, & Bear, LLP
2040 Main Street
Fourteenth Floor
Irvine, CA 92614

In re Application of	:	
KINGSLAND et al.	:	
Application No.: 10/520,436	:	
PCT No.: PCT/GB03/02928	:	
Int. Filing: 07 July 2003	:	DECISION ON PETITION
Priority Date: 10 July 2003	:	
Attorney Docket No.: FDEHN7.002APC	:	
For: PROCESSES FOR THE PREPARATION OF FIBRINOGEN	:	

This decision is issued in response to applicants' "Renewed Petition Under 37 CFR 1.47(a)" filed 17 August 2006. In a decision dated 30 June 2006, applicants' petition under 37 CFR 1.47(a) to accept the application without the signature of joint inventor, Robert Clemmitt, was dismissed.

The petition for status under 37 CFR 1.47(a) is moot since the declaration filed 17 August 2006 with the present renewed petition was executed by the named inventor, the previous non-signing inventor, Robert Clemmitt. The declaration filed 17 August 2006 is acceptable under 37 CFR 1.497.

For the reasons above, the renewed petition under 37 CFR 1.47(a) is **DISMISSED** as MOOT.

The application has an international filing date of 07 July 2003 under 35 U.S.C. 363 and a date of **17 August 2006** under 35 U.S.C. 371(c)(1),(c)(2) and (c)(4).

The application is being returned to the International Division for processing as the U.S. National Stage of the above-identified international application.

Anthony Smith

Anthony Smith
Attorney-Advisor
Office PCT Legal Administration
Tel.: 571-272-3298
Facsimile: 571-273-0459

UNITED STATES PATENT AND TRADEMARK OFFICE

UNITED STATES DEPARTMENT OF COMMERCE
United States Patent and Trademark Office
Address: COMMISSIONER FOR PATENTS
P.O. Box 1450
Alexandria, Virginia 22313-1450
www.uspto.gov

KNOBBE MARTENS OLSON & BEAR LLP
2040 MAIN STREET
FOURTEENTH FLOOR
IRVINE, CA 92614

Mail Date: 06/01/2010

Applicant	: Teruo Uchibori	: DECISION ON REQUEST FOR
Patent Number	: 7625638	: RECALCULATION of PATENT
Issue Date	: 12/01/2009	: TERM ADJUSTMENT IN VIEW
Application No	: 10/520,444	: OF WYETH AND NOTICE OF INTENT TO
Filed	: 01/06/2005	: ISSUE CERTIFICATE OF CORRECTION
		:

The Request for Recalculation is **GRANTED** to the extent indicated.

The patent term adjustment has been determined to be **159** days. The USPTO will *sua sponte* issue a certificate of correction reflecting the amount of PTA days determined by the recalculation.

Prior to the issuance of the certificate of correction, the USPTO will afford patentee an opportunity to be heard and request reconsideration. Accordingly, patentee has **one month or thirty (30) days**, whichever is longer, to file a request for reconsideration of this patent term adjustment calculation. See 35 U.S.C. 154(b)(3)(B)(ii) and 37 CFR 1.322(a)(4). No extensions of time will be granted under 37 CFR 1.136.

Patentee should use document code PET.OP if electronically filing a request for reconsideration of this patent term adjustment calculation. The patentee must also include the information required by 37 CFR 1.705(b)(2) and the fee required by 37 CFR 1.18(e). If patentee does not file a timely request for reconsideration of this patent term adjustment calculation including the information required by 37 CFR 1.705(b)(2) and the fee required by 37 CFR 1.18(e), the USPTO will issue a certificate of correction reflecting the PTA determination noted above.

Patentee should be aware that in order to preserve the right to review in the United States District Court for the District of Columbia of the USPTO patent term adjustment determination, patentee must ensure that he or she also take the steps required under 35 U.S.C. 154(b)(4)(A) in a timely manner. Nothing in the request for recalculation should be construed as providing an alternative time frame for commencing a civil action under 35 U.S.C. 154(b)(4)(A).

Any questions concerning this decision should be directed to the Office of Patent Legal Administration at 571-272-7702.

UNITED STATES PATENT AND TRADEMARK OFFICE

Commissioner for Patents
United States Patent and Trademark Office
P.O. Box 1450
Alexandria, VA 22313-1450
www.uspto.gov

VENABLE LLP
PO BOX 34385
WASHINGTON DC 20043-9998

COPY MAILED

DEC 0 4 2008

OFFICE OF PETITIONS

In re Application of	:	
Henrik Holter	:	
Application No. 10/520,462	:	DECISION ON PETITION
Filed: August 12, 2005	:	
Attorney Docket No. 43327-212567	:	

This is a decision on the petition to withdraw the holding of abandonment under 37 CFR 1.181, filed July 30, 2008.

The petition is **GRANTED.**

The above-identified application was held abandoned for failure to timely file a response to the final Office action mailed September 24, 2007. This Office action set a shortened statutory period for reply of three (3) months. Therefore, the last day a reply could have been timely filed, with a three month extension of time, would have been March 24, 2008. The Office mailed a Notice of Abandonment on May 30, 2008.

A review of the application file reveals the presence of a Request for Continued Examination (RCe), filed on March 24, 2008, made timely by obtaining a three month extension of time. A review of Office finance records confirms that the Office received the fee for the three month extension of time on March 24, 2008. Accordingly, it is obvious that the Notice of Abandonment was mailed in error.

In view thereof, **the holding of abandonment is withdrawn.**

The matter is being forwarded to Group Art Unit 2821 for consideration of the Amendment, timely filed with a three month extension of time on March 24, 2008.

Telephone inquiries regarding this decision should be directed to the undersigned at (571)272-3207.

Cliff Congo
Petitions Attorney
Office of Petitions

UNITED STATES PATENT AND TRADEMARK OFFICE

UNITED STATES DEPARTMENT OF COMMERCE
United States Patent and Trademark Office
Address: COMMISSIONER FOR PATENTS
P.O. Box 1450
Alexandria, Virginia 22313-1450
www.uspto.gov

VENABLE LLP
P.O. BOX 34385
WASHINGTON, DC 20043-9998

Mail Date: 04/21/2010

Applicant	: Henrik Holter	: DECISION ON REQUEST FOR
Patent Number	: 7616169	: RECALCULATION of PATENT
Issue Date	: 11/10/2009	: TERM ADJUSTMENT IN VIEW
Appliction No	: 10/520,462	: OF WYETH AND NOTICE OF INTENT TO
Filed	: 08/12/2005	: ISSUE CERTIFICATE OF CORRECTION
		:

The Request for Recalculation is **GRANTED** to the extent indicated.

The patent term adjustment has been determined to be **157** days. The USPTO will *sua sponte* issue a certificate of correction reflecting the amount of PTA days determined by the recalculation.

Prior to the issuance of the certificate of correction, the USPTO will afford patentee an opportunity to be heard and request reconsideration. Accordingly, patentee has **one month or thirty (30) days**, whichever is longer, to file a request for reconsideration of this patent term adjustment calculation. See 35 U.S.C. 154(b)(3)(B)(ii) and 37 CFR 1.322(a)(4). No extensions of time will be granted under 37 CFR 1.136.

Patentee should use document code PET.OP if electronically filing a request for reconsideration of this patent term adjustment calculation. The patentee must also include the information required by 37 CFR 1.705(b)(2) and the fee required by 37 CFR 1.18(e). If patentee does not file a timely request for reconsideration of this patent term adjustment calculation including the information required by 37 CFR 1.705(b)(2) and the fee required by 37 CFR 1.18(e), the USPTO will issue a certificate of correction reflecting the PTA determination noted above.

Patentee should be aware that in order to preserve the right to review in the United States District Court for the District of Columbia of the USPTO patent term adjustment determination, patentee must ensure that he or she also take the steps required under 35 U.S.C. 154(b)(4)(A) in a timely manner. Nothing in the request for recalculation should be construed as providing an alternative time frame for commencing a civil action under 35 U.S.C. 154(b)(4)(A).

Any questions concerning this decision should be directed to the Office of Patent Legal Administration at 571-272-7702.

UNITED STATES PATENT AND TRADEMARK OFFICE

Commissioner for Patents
United States Patent and Trademark Office
P.O. Box 1450
Alexandria, VA 22313-1450
www.uspto.gov

MAYER & WILLIAMS PC
251 NORTH AVENUE WEST
2ND FLOOR
WESTFIELD NJ 07090

COPY MAILED

JUL 20 2009

OFFICE OF PETITIONS

In re Application of
HUNIG, Thomas
Application No. 10/520,474
Filed: December 05, 2005
Attorney Docket No. **7003/31**

DECISION ON PETITION

This is a decision on the petition under the unintentional provisions of 37 CFR 1.137(b), filed June 12, 2009, to revive the above-identified application.

The petition is **GRANTED**.

The application became abandoned for failure to reply in a timely manner to the non-final Office action mailed, November 21, 2007, which set a shortened statutory period for reply of three (3) months. No extensions of time under the provisions of 37 CFR 1.136(a) were obtained. Accordingly, the application became abandoned on February 22, 2008.

The petition satisfies the requirements of 37 CFR 1.137(b) in that petitioner has supplied (1) the reply in the form of an amendment, declaration and replacement drawings, (2) the petition fee of $810, and (3) a proper statement of unintentional delay. Accordingly, the reply to the non-final Office action of November 21, 2007 is accepted as having been unintentionally delayed.

Telephone inquiries concerning this decision should be directed to Tredelle Jackson at (571) 272-2783.

This application is being referred to Technology Center AU 1644 for appropriate action on the concurrently filed amendment.

Ramesh Krishnamurthy

Ramesh Krishnamurthy
Petitions Examiner
Office of Petitions

UNITED STATES PATENT AND TRADEMARK OFFICE

Commissioner for Patents
United States Patent and Trademark Office
P.O. Box 1450
Alexandria, VA 22313-1450
www.uspto.gov

MAILED

JUN 08 2010

OFFICE OF PETITIONS

GREENBERG TRAURIG, LLP (SV)
IP DOCKETING
2450 COLORADO AVENUE
SUITE 400E
SANTA MONICA CA 90404

In re Patent No. 7,502,641	: DECISION ON REQUEST
Issued: March 10, 2009	: FOR RECONSIDERATION
Application No. 10/520,489	: OF PATENT TERM ADJUSTMENT
Filed: January 6, 2005	: AND
Attorney Docket No: 120078.010201	: NOTICE OF INTENT TO ISSUE
US. 1	: CERTIFICATE OF CORRECTION

This is a decision on the REQUEST FOR RECONSIDERATION OF PATENT TERM ADJUSTMENT UNDER 37 C.F.R. § 1.705(D) filed on May 8, 2009 in light of the recent court decision in Wyeth v. Dudas, No. 07-1492 (D.D.C. September 30, 2008). On January 15, 2010 an UPDATED SUBMISSION FOR REQUEST FOR RECONSIDERATION OF PATENT TERM ADJUSTMENT UNDER 37 C.F.R. § 1.705(D), was filed January 15, 2010 in light of the Court of Appeals for the Federal Circuit's decision in *Wyeth v. Kappos*, 2009-1120 (Fed. Cir. 1-7-2010). Applicant requests that the determination of patent term adjustment be corrected from 168 days to 209 days. Applicant requests this correction in part on the basis that the Office will take in excess of three years to issue this patent.

The petition to correct the patent term adjustment indicated on the above-identified patent to indicate that the term of the above-identified patent is extended or adjusted by two hundred eight (208) days is **GRANTED** to the extent indicated herein.

It is undisputed that the period of examination delay, "A" delay", pursuant to 37 CFR 1.702(a)(1) is 342 days. As the period from the filing date of the request for continued examination (RCE) to the issue date of the patent is not included in the "B" delay period, the over three year period begins on January 7, 2008, the date the national stage commenced under 35 U.S.C. 371(f), and ends on April 6, 2008, the day before the RCE was filed, the B delay is 90 days, not 91 days. See 35 U.S.C. 154(b)(1)(B)(i).

Applicants direct the office to the Information Disclosure Statement filed on September 24, 2007, subsequent to a reply filed on June 12, 2007 and argue that there should have been a 104 day deduction for applicant delay.

The Information Disclosure Statement filed September 24, 2007 was filed after the filing of a response to the non-Final Office Action on June 12, 2007. In this instance, the filing of the Information Disclosure Statement on September 24, 2007 is considered a failure to engage under 1.704(c)(8). The IDS was not expressly requested by the examiner nor did the IDS include a 1.704(d) statement.

37 CFR 1.704(c)(8) provides that:

> the submission of a supplemental reply or other paper, other than a supplemental reply or other paper expressly requested by the examiner, after a reply has been filed, in which case the period of adjustment set forth in § 1.703 shall be reduced by the number of days, if any, beginning on the day after the date the initial reply was filed and ending on the date that the supplemental reply or other such paper was filed;

Pursuant to 37 CFR 1.704(c)(8) a period of reduction of 104 days counting the number of days in the period beginning on the day after the initial reply was filed, June 12, 2007 and ending on the date of filing of the last supplemental paper, the IDS filed September 24, 2007. Accordingly, a period of reduction of 104 days is being entered.

While not indicated by applicant, a review of the record reveals that the initial determination of patent term adjustment also included a reduction of 54 days for the submission of a "Miscellaneous Incoming Paper" after the Notice of Allowance. The reduction in question, after the mailing of the Notice of Allowance was a "MISCELLANEOUS COMMUNICATION IN RESPONSE TO NOTICE OF ALLOWABILITY", filed January 16, 2009 with the Issue Fee payment.

The submission of an application for patent term adjustment under § 1.705(b) (with or without request under § 1.705(c) for reinstatement of reduced patent term adjustment) will not be considered a failure to engage in reasonable efforts to conclude prosecution (processing or examination) of the application under paragraph (c)(10) of this section. *See 37 CFR 1.704(e).*

It is concluded that the patent term adjustment should not have been reduced by 54 days.

As such, the patent term adjustment is 208 days (342 "A delay days" + 90 "B delay days"- 224 applicant delay days), not 209 days.

The Office will *sua sponte* issue a certificate of correction. Pursuant to 37 CFR 1.322, the Office will not issue a certificate of correction without first providing assignee or patentee an opportunity to be heard. Accordingly, patentees are given **one (1) month or thirty (30) days**, whichever is longer, from the mail date of this decision to respond. No extensions of time will be granted under § 1.136.

The application is being forwarded to the Certificates of Branch for issuance of a certificate of correction. The Office will issue a certificate of correction indicating that the term of the above-identified patent is extended or adjusted by **two hundred eight (208)** days.

Telephone inquiries specific to this decision should be directed to Senior Petitions Attorney Patricia Faison-Ball at (571) 272-3212.

Anthony Knight
Director
Office of Petitions

Enclosure: Copy of DRAFT Certificate of Correction

DRAFT

UNITED STATES PATENT AND TRADEMARK OFFICE

CERTIFICATE OF CORRECTION

PATENT : 7,502,641 B2

DATED : March 10, 2009

INVENTOR(S) : Alan Breen

It is certified that error appears in the above-identified patent and that said Letters Patent is hereby corrected as shown below:

On the cover page,

[*] Notice: Subject to any disclaimer, the term of this patent is extended or adjusted under 35 USC 154(b) by (168) days

Delete the phrase "by 168 days" and insert – by 208 days--

UNITED STATES PATENT AND TRADEMARK OFFICE

Commissioner for Patents
United States Patent and Trademark Office
P.O. Box 1450
Alexandria, VA 22313-1450
www.uspto.gov

TOWNSEND AND TOWNSEND AND CREW, LLP
TWO EMBARCADERO CENTER
EIGHTH FLOOR
SAN FRANCISCO, CA 94111-3834

COPY MAILED

APR 14 2008

OFFICE OF PETITIONS

In re Application of	:	
WARD, Christopher M. et al.	:	
Application No. 10/520,502	:	DECISION ON PETITION
Filed: January 03, 2005	:	TO WITHDRAW
Attorney Docket No. **021911.001110US**	:	FROM RECORD

This is a decision on the Request to Withdraw as attorney or agent of record under 37 C.F.R. § 1.36(b), filed February 08, 2008.

The request is **APPROVED**.

A grantable request to withdraw as attorney/agent of record must be signed by every attorney/agent seeking to withdraw or contain a clear indication that one attorney is signing on behalf of another/others. A request to withdraw will not be approved unless at least 30 (thirty) days would remain between the date of approval and the later of the expiration date of a time to file a response or the expiration date of the maximum time period which can be extended under 37 C.F.R. § 1.136(a).

The request was signed by Karen B. Dow on behalf of all attorneys of record who are associated with customer No. 20350. All attorneys/agents associated have been withdrawn. Applicant is reminded that there is no attorney of record at this time.

The request to change the correspondence of record is not acceptable as the requested correspondence address is not that of: (1) the first named signing inventor; or (2) an intervening assignee of the entire interest under 37 C.F.R 3.71. All future communications from the Office will be directed to the first named signing inventor.

There is an outstanding Office action mailed March 18, 2008 that requires a reply from the applicant.

Telephone inquiries concerning this decision should be directed to the undersigned at 571-272-4231.

Michelle R. Eason
Paralegal Specialist
Office of Petitions

cc: **CHRISTOPHER M. WARD**
CRC IMMUNOLOGY GROUP
PATERSON INSTITUTE FOR CANCER RESEARCH
CHRISTLE HOSPITAL NHS TRUST
WILMSLOW ROAD
MANCHESTER, UNITED KINGDOM
M20 4BX

cc: **MARSHALL, GERSTEIN & BORUN LLP**
233 SOUTH WACKER DRIVE
6300 SEARS TOWER
CHICAGO, IL 60606-6357

UNITED STATES PATENT AND TRADEMARK OFFICE

Commissioner for Patents
United States Patent and Trademark Office
P.O. Box 1450
Alexandria, VA 22313-1450
www.uspto.gov

MARSHALL, GERSTEIN & BORUN LLP
233 SOUTH WACKER DRIVE
6300 SEARS TOWER
CHICAGO IL 60606-6357

COPY MAILED

DEC 17 2009

OFFICE OF PETITIONS

In re Application of :
Christopher M. Ward et al. :
Application No. 10/520,502 :
Filed: January 3, 2005 :
Attorney Docket No. **31511/43664A** :

ON PETITION

This is a decision on the petition under the unintentional provisions of 37 CFR 1.137(b), filed September 18, 2009, to revive the above-identified application.

The petition is **GRANTED**.

The application became abandoned for failure to submit formal drawings in a timely manner in reply to the Notice to File Corrected Application Papers, mailed May 15, 2009, which set a period for reply of two (2) months. Accordingly, this application became abandoned on July 16, 2009.

The petition satisfies the requirements of 37 CFR 1.137(b) in that petitioner has supplied (1) the reply in the form of corrected formal drawings , (2) the petition fee of $1,620; and (3) a proper statement of unintentional delay.

Telephone inquiries concerning this decision should be directed to JoAnne Burke at 571-272-4584

This application is being referred to the Office of Data Management for appropriate action in the normal course of business on the reply received.

JoAnne Burke
Petitions Examiner
Office of Petitions

UNITED STATES PATENT AND TRADEMARK OFFICE

Commissioner for Patents
United States Patent and Trademark Office
P.O. Box 1450
Alexandria, VA 22313-1450
www.uspto.gov

MORRISON & FOERSTER LLP
1650 TYSONS BOULEVARD
SUITE 400
MCLEAN, VA 22102

COPY MAILED

JAN 28 2008

OFFICE OF PETITIONS

In re Application of	:	
Thomas BELLING, et al	:	
Application No. 10/520,526	:	DECISION ON PETITION
Filed: January 7, 2005	:	TO WITHDRAW
Attorney Docket No. 449122078900	:	FROM RECORD
	:	

This is a decision on the Request to Withdraw as attorney or agent of record under 37 C.F.R. § 1.36(b), filed August 31, 2007.

The request is **DISMISSED** as moot.

A review of the file record indicates that the power of attorney to Morrison & Foerster LLP, has been revoked by the assignee of the patent application on October 30, 2007. Accordingly, the request to withdraw under 37 C.F.R. § 1.36(b) is moot.

The correspondence address of record has been changed and the new correspondence address is the address indicated below.

Telephone inquires concerning this decision should be directed to undersigned at 571-272- 6735.

Diane Goodwyn
Petitions Examiner
Office of Petitions

cc: BELL, BOYD & LLOYD, LLP
P.O. BOX 1135
CHICAGO, IL 60690

UNITED STATES DEPARTMENT OF COMMERCE
Patent and Trademark Office
ASSISTANT SECRETARY OF COMMERCE AND
COMMISSIONER OF PATENTS AND TRADEMARKS
Washington, DC 20231

2/11/09

Patent No. :7304192
Inventor(s) :KAWAMURA ET AL.
Issued :12/4/2007
Title :METHOD FOR PRODUCING CHLORINATED HYDROCARBON HAVING CHLORINATED TERTIARY CARBON
Atty.doc./File No.

Request for Certificates of Correction

Consideration has been given to your request for the issuance of a Certificate of Correction, for the above – identified patent under the provisions of CFR 1.322.

Inspection of the application for the patent reveals col. 12, line 32 & col.14 is printed in accordance with the record and please show evidence of an amendment or document. Therefore being no fault on the Patent and Trademark Office, It has no authority to issue a certificate of correction under the provision of 1.322.

In view of the forgoing, your request in this matter, is hereby denied. However the remaining of the corrections will be corrected.

Future written correspondence concerning this matter should be filed and directed to Decisions & Certificates of Correction Branch.

Henry Randall
Cecelia Newman
Decisions & Certificates
of Correction Branch
(703) 308-9390 Ext. 108

KENYON AND KENYON
1500 K Street N.W. SUITE 700
WASHINGTON, DC 20005

HR/MD

20 JUN 2006

#7

UNITED STATES PATENT AND TRADEMARK OFFICE

Commissioner for Patents
United States Patent and Trademark Office
P.O. Box 1450
Alexandria, VA 22313-1450
www.uspto.gov

BAYER CROPSCIENCE LP
Patent Department
100 BAYER ROAD
PITTSBURGH PA 15205-9741

In re Application of HIMMLER et al. Application No.: 10/520,549 PCT No.: PCT/EP03/06980 Int. Filing Date: 01 July 2003 Priority Date: 11 July 2002 Attorney's Docket No.: CS8445/LeA 36,137 For: CIS-ALKOXY-SUBSTITUTED SPIROCYCLIC 1-H-PYRROLIDINE-2,4-DIONE DERIVATIVES SERVING AS PESTICIDES	:	DECISION ON PAPERS UNDER 37 CFR 1.42

This is a decision on the submission filed by applicants on 10 April 2006, which was accompanied by, *inter alia*, a declaration of the inventors. The indication in this declaration that inventor Christoph Erdelen is deceased has been treated as a request for status under 37 CFR 1.42.

BACKGROUND

On 01 July 2003, applicants filed international application PCT/EP03/06980 which claimed a priority date of 11 July 2002 and designated the United States. A copy of the international application was communicated to the United States Patent and Trademark Office from the International Bureau on 22 January 2004. The thirty-month period for paying the basic national fee in the United States expired at midnight on 11 January 2005.

On 06 January 2005, applicants filed, *inter alia*, a transmittal letter for entry into the national stage in the United States accompanied by, *inter alia*, the basic national fee.

On 31 March 2006, the United States Designated/Elected Office (DO/EO/US) mailed a NOTIFICATION OF MISSING REQUIREMENTS UNDER 35 U.S.C. 371 (Form PCT/DO/EO/905) indicating, *inter alia*, that an oath or declaration in compliance with 37 CFR 1.497(a)-(b) and the surcharge under 37 CFR 1.492(h) for filing any of the search fee, the examination fee, or the oath or declaration after the date of the commencement of the national stage were required.

On 10 April 2006, applicants filed the instant submission which was accompanied by, *inter alia*, a copy of a declaration of inventors and a return receipt confirmation of a facsimile transmission received by the USPTO on 09 March 2006. The indication in the declaration of inventors that inventor Christoph Erdelen is deceased has been treated as a request for status under 37 CFR 1.42.

DISCUSSION

Petition Under 37 CFR 1.181

Applicants have provided sufficient evidence to establish that on 09 March 2006 applicants filed a declaration of the inventors. The proof is in the form of the copy of the receipt which bears a date of 09 March 2006 and which itemizes a "Combined Declaration and Power of Attorney" and identifies the above-captioned application number and docket number. Further, practitioner states that the copy of the declaration filed 10 April 2006 is a copy of the declaration originally filed 09 March 2006. Therefore, in view of the receipt and practitioner's statement, the declaration received on 10 April 2006 may properly be accepted as originally received in the USPTO on 09 March 2006. The NOTIFICATION OF MISSING REQUIREMENTS mailed 31 March 2006 is hereby vacated.

Request Under 37 CFR 1.42

The declaration filed 09 March 2006 fails to comply with 37 CFR 1.497(a)-(b). The declaration must include the signature of the legal representative or the signature of all of the heirs (or if there is only one heir, the sole heir). The declaration does not indicate that Angelika Lubos-Erdelen is the sole heir or is the legal representative for the deceased inventor. If the declaration is signed by a legal representative, the declaration should state that this person is the legal representative. Alternatively, applicants' attorney may file a statement certifying that the person signing is the legal representative. If the declaration is not signed by a legal representative and does not indicate that the persons signing are all of the heirs (or the sole heir), then it must be accompanied by a statement by either those signing or by the attorney which sets forth (1) that they are in fact all the heirs (or the sole heir) of the deceased and (2) that no legal representative of the deceased's estate has been appointed or is required by the applicable law to be appointed.

CONCLUSION

For the above reasons, the request for status under 37 CFR 1.42 is **REFUSED**.

The NOTIFICATION OF MISSING REQUIREMENTS mailed 31 March 2006 is **VACATED**.

Please direct further correspondence with respect to this matter to Mail Stop PCT, Commissioner for Patents, Office of PCT Legal Administration, P.O. Box 1450, Alexandria, Virginia 22313-1450, with the contents of the letter marked to the attention of the Office of PCT Legal Administration.

Applicant is required to submit a declaration in compliance with 37 CFR 1.497 and 1.42 within a time period of **TWO (2) MONTHS** from the mail date of this Decision. THIS PERIOD FOR RESPONSE MAY BE EXTENDED UNDER 37 CFR 1.136(a). FAILURE TO PROPERLY RESPOND WILL RESULT IN ABANDONMENT. Any request for reconsideration of this decision should include a cover letter entitled "Renewed Submission Under 37 CFR 1.42."

Daniel Stemmer
Legal Examiner
PCT Legal Affairs
Office of Patent Cooperation Treaty
Legal Administration
Telephone: (571) 272-3301
Facsimile: (571) 273-0459

20 SEP 2006

UNITED STATES PATENT AND TRADEMARK OFFICE

Commissioner for Patents
United States Patent and Trademark Office
P.O. Box 1450
Alexandria, VA 22313-1450
www.uspto.gov

BAYER CROPSCIENCE LP
Patent Department
100 BAYER ROAD
PITTSBURGH PA 15205-9741

In re Application of	:	
HIMMLER et al.	:	DECISION ON
Application No.: 10/520,549	:	
PCT No.: PCT/EP03/06980	:	PAPERS
Int. Filing Date: 01 July 2003	:	
Priority Date: 11 July 2002	:	UNDER 37 CFR 1.42
Attorney's Docket No.: CS8445/LeA 36,137	:	
For: CIS-ALKOXY-SUBSTITUTED SPIROCYCLIC	:	
1-H-PYRROLIDINE-2,4-DIONE DERIVATIVES	:	
SERVING AS PESTICIDES	:	

This is a decision on the renewed submission under 37 CFR 1.42 filed by applicants on 21 July 2006.

BACKGROUND

On 01 July 2003, applicants filed international application PCT/EP03/06980 which claimed a priority date of 11 July 2002 and designated the United States. A copy of the international application was communicated to the United States Patent and Trademark Office from the International Bureau on 22 January 2004. The thirty-month period for paying the basic national fee in the United States expired at midnight on 11 January 2005.

On 06 January 2005, applicants filed, *inter alia*, a transmittal letter for entry into the national stage in the United States accompanied by, *inter alia*, the basic national fee.

On 31 March 2006, the United States Designated/Elected Office (DO/EO/US) mailed a NOTIFICATION OF MISSING REQUIREMENTS UNDER 35 U.S.C. 371 (Form PCT/DO/EO/905) indicating, *inter alia*, that an oath or declaration in compliance with 37 CFR 1.497(a)-(b) and the surcharge under 37 CFR 1.492(h) for filing any of the search fee, the examination fee, or the oath or declaration after the date of the commencement of the national stage were required.

On 10 April 2006, applicants filed asubmission which was accompanied by, *inter alia*, a copy of a declaration of inventors and a return receipt confirmation of a facsimile transmission received by the USPTO on 09 March 2006. The indication in the declaration of inventors that inventor Christoph Erdelen is deceased was treated as a request for status under 37 CFR 1.42.

On 20 June 2006, a decision was mailed granting applicants' petition to accept the copy of the declaration filed 10 April 2006 as having been received on 09 March 2006 and vacating the NOTIFICATION OF MISSING REQUIREMENTS mailed 31 March 2006. The decision dismissed applicants' request for status under 37 CFR 1.42 because the declaration failed to indicate that "Angelika Lubos-Erdelen is the sole heir or is the legal representative for the deceased inventor."

On 21 July 2006, applicants filed the instant renewed submission under 37 CFR 1.42.

DISCUSSION

The instant submission points out that the submission filed 09 March 2006 contained a statement by applicants' representative that "[t]o the best of my knowledge and belief, Angelika Lubos-Erdelen is the sole heir to Christoph Erdelen." The undersigned overlooked that statement in the decision mailed 20 June 2006. Any inconvenience is regretted.

The submission of the declaration executed by the sole heir of the deceased inventor is hereby construed as an indication that no legal representative of the deceased's estate has been appointed and that no legal representative is required by the applicable law to be appointed and thus the sole heir is signing as the legal representative of the estate. If this interpretation is incorrect, applicant is required to promptly notify the Office of such and to submit a declaration properly executed by the legal representative of the deceased inventor in response to this decision. Accordingly, the application papers are now in compliance with 37 CFR 1.42.

The declaration of inventors filed 09 March 2006 is now in compliance with 37 CFR 1.497(a)-(b).

CONCLUSION

For the above reasons, the request for status under 37 CFR 1.42 is **ACCEPTED**.

Please direct further correspondence with respect to this matter to Mail Stop PCT, Commissioner for Patents, Office of PCT Legal Administration, P.O. Box 1450, Alexandria, Virginia 22313-1450, with the contents of the letter marked to the attention of the Office of PCT Legal Administration.

This application is being forwarded to the National Stage Processing Branch of the Office of PCT Operations to continue national stage processing of the application.

Daniel Stemmer
Legal Examiner
PCT Legal Affairs
Office of Patent Cooperation Treaty
Legal Administration
Telephone: (571) 272-3301; Facsimile: (571) 273-0459

#4

UNITED STATES PATENT AND TRADEMARK OFFICE

Commissioner for Patents
United States Patent and Trademark Office
P.O. Box 1450
Alexandria, VA 22313-1450
www.uspto.gov

30 JAN 2006

Jeffrey M. Greenman
Bayer Pharmaceutical Corporation
400 Morgan Lane
West Haven, CT 06516

In re Application of	:	
HENDRIX et al.	:	
Application No.: 10/520,552	:	DECISION ON PETITION
PCT No.: PCT/EP03/06661	:	
Int. Filing Date: 25 June 2003	:	
Priority Date: 08 July 2002	:	
Attorney Docket No.: Le A 36 079	:	
For: SUBSTITUTED IMIDAZOTRIAZINES		

This decision is issued in response to applicants' "Completion of Filing Requirements Nonprovisional Application" which is being treated as a Request under 37 CFR 1.42 filed 19 October 2005.

BACKGROUND

On 25 June 2003, applicants filed international application PCT/EP03/06661, which claimed a priority date of 08 July 2002. A copy of the international application was communicated to the United States Patent and Trademark Office from the International Bureau on 15 January 2004. Pursuant to 37 CFR 1.495, the deadline for payment of the basic national fee in the United States was to expire 30 months from the priority date, 08 January 2005.

On 05 January 2005, applicants filed a transmittal for entry into the national stage in the United States, which accompanied by, inter alia: the requisite basic national fee as required by 35 U.S.C. 371(c)(1); an English translation of the international application; and a preliminary amendment.

On 17 August 2005, the United Stated Designated/Elected Office mailed a Notification of Missing Requirements under 35 U.S.C. 371 (Form PCT/DO/EO/905) indicating that an oath or declaration in compliance with 37 CFR 1.497(a) and (b) must be filed. The notification set a two-month time limit in which to respond.

On 19 October 2005, applicants filed the present request under 37 CFR 1.42.

DISCUSSION

37 CFR 1.42 *When the Inventor is Dead*, states, in part:

> In case of the death of the inventor, the legal representative (executor, administrator, etc.) of the deceased inventor may make the necessary oath or declaration, and apply for and obtain the patent.

Section 409.01(a) of the Manual of Patent Examining Procedure (MPEP) states that the application can also be executed by "all of the heirs" of the deceased inventor, where no legal representative has been appointed.

The declaration submitted on 19 October 2005 was executed by Maria Niewohner as "heiress" to the deceased inventor, Ulrich Niewohner. Counsel avers that "Maria Niewohner is the sole heir of Ulrich Niewohner." The declaration is acceptable under 37 CFR 1.42 and complies with 37 CFR 1.497(a)-(b). Accordingly, the requirements for entry into national stage under 35 U.S.C. 371(c) were completed as of 19 October 2005.

It is noted that the submission of the declaration executed by all of the heirs of the deceased inventor is hereby construed as an indication that no legal representative of the deceased's estate has been appointed or is statutorily required to be appointed. If this interpretation is incorrect, applicant is required to promptly notify the Office of such and to submit a declaration properly executed by the legal representative of the deceased inventor in response to this decision.

CONCLUSION

The papers filed under 37 CFR 1.42 are **ACCEPTED**.

The application has an international filing date of 25 June 2003, under 35 U.S.C. 363, and a 35 U.S.C. 371(c) date of **19 October 2005**.

This application is being forwarded to the National Stage Processing Branch of the International Division for continued national stage processing.

Anthony Smith
Attorney-Advisor
Office of PCT Legal Administration
Tel: (571) 272-3298
Fax: (571) 273-0459

UNITED STATES PATENT AND TRADEMARK OFFICE

UNITED STATES DEPARTMENT OF COMMERCE
United States Patent and Trademark Office
Address: COMMISSIONER FOR PATENTS
P.O. Box 1450
Alexandria, Virginia 22313-1450
www.uspto.gov

MARSHALL, GERSTEIN & BORUN LLP
233 SOUTH WACKER DRIVE
6300 WILLIS TOWER
CHICAGO, IL 60606-6357

Mail Date: 04/21/2010

Applicant	: Chad A. Mirkin	: DECISION ON REQUEST FOR
Patent Number	: 7611619	: RECALCULATION of PATENT
Issue Date	: 11/03/2009	: TERM ADJUSTMENT IN VIEW
Appliction No	: 10/520,554	: OF WYETH AND NOTICE OF INTENT TO
Filed	: 09/14/2005	: ISSUE CERTIFICATE OF CORRECTION
		:

The Request for Recalculation is **GRANTED** to the extent indicated.

The patent term adjustment has been determined to be **1016** days. The USPTO will *sua sponte* issue a certificate of correction reflecting the amount of PTA days determined by the recalculation.

Prior to the issuance of the certificate of correction, the USPTO will afford patentee an opportunity to be heard and request reconsideration. Accordingly, patentee has **one month or thirty (30) days**, whichever is longer, to file a request for reconsideration of this patent term adjustment calculation. See 35 U.S.C. 154(b)(3)(B)(ii) and 37 CFR 1.322(a)(4). No extensions of time will be granted under 37 CFR 1.136.

Patentee should use document code PET.OP if electronically filing a request for reconsideration of this patent term adjustment calculation. The patentee must also include the information required by 37 CFR 1.705(b)(2) and the fee required by 37 CFR 1.18(e). If patentee does not file a timely request for reconsideration of this patent term adjustment calculation including the information required by 37 CFR 1.705(b)(2) and the fee required by 37 CFR 1.18(e), the USPTO will issue a certificate of correction reflecting the PTA determination noted above.

Patentee should be aware that in order to preserve the right to review in the United States District Court for the District of Columbia of the USPTO patent term adjustment determination, patentee must ensure that he or she also take the steps required under 35 U.S.C. 154(b)(4)(A) in a timely manner. Nothing in the request for recalculation should be construed as providing an alternative time frame for commencing a civil action under 35 U.S.C. 154(b)(4)(A).

Any questions concerning this decision should be directed to the Office of Patent Legal Administration at 571-272-7702.

UNITED STATES PATENT AND TRADEMARK OFFICE

UNITED STATES DEPARTMENT OF COMMERCE
United States Patent and Trademark Office
Address: COMMISSIONER FOR PATENTS
P.O. Box 1450
Alexandria, Virginia 22313-1450
www.uspto.gov

MARSHALL, GERSTEIN & BORUN LLP
233 SOUTH WACKER DRIVE
6300 WILLIS TOWER
CHICAGO, IL 60606-6357

Mail Date: 05/18/2010

Applicant : Chad A. Mirkin
Patent Number : 7611619
Issue Date : 11/03/2009
Application No : 10/520,554
Filed : 09/14/2005

: NOTICE CONCERNING IMPROPER
: CALCULATION OF PATENT TERM
: ADJUSTMENT BASED UPON USPTO
: IMPROPERLY MEASURING REDUCTION
: PERIOD UNDER 37 CFR 1.704(c)(10).

The United States Patent and Trademark Office (USPTO) discovered that in processing the recent recalculation decisions mailed in response to patentee's filed Request for Recalculation of Patent Term Adjustment in view of Wyeth, the USPTO improperly measured the reduction period for reductions under 37 CFR 1.704(c)(10). Pursuant to 37 CFR 1.704(c)(10), patentee's reduction begins on the date of filing the amendment under 37 CFR 1.312 ("1.312 amendment") or other related paper and ends on the date that the Office mails a response to the filing of the 1.312 amendment or other paper. It has been discovered that during the recalculation, the calculation failed to the limit the reduction to the mail date of the response to the 1.312 amendment or other paper. Accordingly, patentee's reductions were greater than warranted.

This notice **VACATES** the previous GRANTED request for recalculation and provides patentee with a revised GRANTED recalculation.

The patent term adjustment has been determined to be **1080** days. The USPTO will *sua sponte* issue a certificate of correction reflecting the amount of patent term adjustment (PTA) days determined by the recalculation.

Prior to the issuance of the certificate of correction, the USPTO will afford patentee an opportunity to be heard and request reconsideration. Accordingly, patentee has **one month or thirty (30) days** from the mail date of this notice, whichever is longer, to file a request for reconsideration of this PTA calculation. See 35 U.S.C. § 154(b)(3)(B)(ii) and 37 CFR 1.322(a)(4).

Patentee should use document code PET.OP if electronically filing a request for reconsideration of this PTA calculation. The patentee must also include the information required by 37 CFR 1.705(b)(2), and the fee required by 37 CFR 1.18(e). If patentee does not file a timely request for reconsideration of this PTA calculation, including the information required by 37 CFR 1.705(b)(2) and the fee required by 37 CFR 1.18(e), the USPTO will issue a certificate of correction reflecting the PTA determination noted above.

Patentee should be aware that in order to preserve the right of review of the USPTO's PTA determination in the United States District Court for the District of Columbia, patentee must ensure that the steps required under 35 U.S.C. § 154 (b)(4) are taken in a timely manner. Nothing in the request for recalculation should be construed as providing an alternative time frame for commencing a civil action under 35 U.S.C. § 154(b)(4).

15 MAR 2006

#4

UNITED STATES PATENT AND TRADEMARK OFFICE

COMMISSIONER FOR PATENTS
UNITED STATES PATENT AND TRADEMARK OFFICE
P.O. BOX 1450
ALEXANDRIA, VA 22313-1450
www.uspto.gov

Robert M. Hunter PLLC
P.O. Box 2709
Kamuela, HI 96743

In re Application of Li. US Application No.: 10/520,563 PCT Application No.: PCT/CN02/00486 Int. Filing Date: 09 July 2002 Priority Date: 09 July 2002 Attorney's File Reference: 05-0107-LI For: ATMOSPHERE HEAT TREATMENT COCATALYST, METHOD OF ITS APPLICATION, HEAT TREATMENT METHOD AND HEAT TREATMENT ATMOSPHERE OF USING THE COCATALYST	DECISION ON PETITION UNDER 37 CFR 1.181

This is a decision on applicants' "Request for Reconsideration of Holding of Abandonment" filed on 09 August 2005.

BACKGROUND

On 23 January 2003, international application PCT/CN02/00486 was published with a priority claim to a Chinese application filed 04 July 2001.

On 07 January 2005, applicants filed a submission under 35 USC 371 to enter the U.S. national phase.

On 01 July 2005, a Notification of Abandonment (Form PCT/DO/EO/909) was mailed to applicants, indicating that this application had become abandoned with respect to the national stage in the United States for failure to provide the copy of the International Application by 30 months.

On 09 August 2005, applicants filed the present petition.

DISCUSSION

A review of the application file reveals that applicants withdrew the priority claim on 31 October 2003 as evidenced by Notification of Withdrawal of Priority Claim (Form PCT/IB/317) mailed 04 November 2003. Thus, the international filing date of 09 July 2002 is the priority date for the purposes of computing time limits. PCT Art. 2(xi)(c). Applicant paid the basic national

fee on 07 January 2005 which is within the 30 month timeframe required under 37 CFR 1.495(b) to avoid abandonment.

CONCLUSION

For the reasons above, the petition under 37 CFR 1.181 to withdraw the holding of abandonment is **GRANTED**.

The Notification of Abandonment (Form PCT/DO/EO/909) mailed 01 July 2005, is hereby **VACATED**.

This application is being forwarded to the National Stage Processing Division of the Office of PCT Operations for continued processing.

Aileen Felton
Petitions Detailee
Office of PCT Legal Administration
U.S. Patent and Trademark Office
P.O. Box 1450
Alexandria, VA 22313
VOX (571) 272-6095
Aileen.Felton@uspto.gov

Boris Milef
Attorney-Advisor
Office of PCT Legal Administration
U.S. Patent and Trademark Office
P.O. Box 1450
Alexandria, VA 22313

UNITED STATES PATENT AND TRADEMARK OFFICE

Commissioner for Patents
United States Patent and Trademark Office
P.O. Box 1450
Alexandria, VA 22313-1450
www.uspto.gov

COPY MAILED

APR 14 2008

OFFICE OF PETITIONS

ROBERT M. HUNTER PLLC
P.O. BOX 2709
KAMUELA, HI 96743

In re Application of
LI, Langen
Application No. 10/520,563
Filed: January 07, 2005
Attorney Docket No. **05-10107-LI**

DECISION ON PETITION TO WITHDRAW FROM RECORD

This is a decision on the Request to Withdraw as attorney or agent of record under 37 C.F.R. § 1.36(b), filed March 03, 2008.

The request is **APPROVED**.

A grantable request to withdraw as attorney/agent of record must be signed by every attorney/agent seeking to withdraw or contain a clear indication that one attorney is signing on behalf of another/others. A request to withdraw will not be approved unless at least 30 (thirty) days would remain between the date of approval and the later of the expiration date of a time to file a response or the expiration date of the maximum time period which can be extended under 37 C.F.R. § 1.136(a).

The request was signed by Robert M. Hunter on behalf of all attorneys of record who are associated with customer No. 26357. All attorneys/agents associated have been withdrawn. Applicant is reminded that there is no attorney of record at this time.

All future correspondence will be directed to the first named inventor Langen Li at the address indicated below.

There is an outstanding Office action mailed December 07, 2007 that requires a reply from the applicant.

Telephone inquiries concerning this decision should be directed to the undersigned at 571-272-4231.

Michelle R. Eason
Paralegal Specialist
Office of Petitions

cc: **LANGEN LI**
P.O. BOX 296
NO. 1, TAIBEI NORTH ROAD
XI'AN, SHAANXI
CN 710069

UNITED STATES PATENT AND TRADEMARK OFFICE

Commissioner for Patents
United States Patent and Trademark Office
P.O. Box 1450
Alexandria, VA 22313-1450
www.uspto.gov

BASELL USA INC.
INTELLECTUAL PROPERTY
912 APPLETON ROAD
ELKTON MD 21921

COPY MAILED

NOV 29 2007

OFFICE OF PETITIONS

In re Application of :
Luigi Resconi et al :
Application No. 10/520,565 : DECISION ON PETITION
Filed: January 7, 2005 :
Attorney Docket No. FE 6033 :
(US)

This is a decision on the petition under 37 CFR 1.137(b), filed October 12, 2007, to revive the above-identified application.

The petition is **GRANTED**.

This application became abandoned for failure to timely pay the issue and publication fees on or before October 5, 2006, as required by the Notice of Allowance and Fee(s) Due, mailed July 5, 2006. Accordingly, the date of abandonment of this application is October 6, 2006. A Notice of Abandonment was mailed on November 17, 2006.

The petition satisfies the requirements of 37 CFR 1.137(b) in that petitioner has supplied (1) the reply in the form of payment of the issue fee of $1,440 and the publication fee of $300, (2) the petition fee of $1,540, and (3) a proper statement of unintentional delay. Accordingly, the issue and publication fees are accepted as being unintentionally delayed.

Telephone inquiries concerning this decision should be directed to the undersigned at (571) 272-3218.

This application is being referred to Office of Data Management for appropriate processing in accordance with this decision on petition.

Frances Hicks
Petitions Examiner
Office of Petitions

UNITED STATES PATENT AND TRADEMARK OFFICE

COMMISSIONER FOR PATENTS
UNITED STATES PATENT AND TRADEMARK OFFICE
P.O. BOX 1450
ALEXANDRIA, VA 22313-1450
www.uspto.gov

#5

24 JAN 2006

NOVARTIS
CORPORATE INTELLECTUAL PROPERTY
ONE HEALTH PLAZA 104/3
EAST HANOVER, NJ 07936-1080

In re Application of BETZ et al	:	
U.S. Application No.: 10/520,568	:	
PCT Application No.: PCT/EP03/07349	:	
Int. Filing Date: 08 July 2003	:	DECISION
Priority Date Claimed: 09 July 2002	:	
Attorney Docket No.: BP/G-32575A/BCK	:	
For: LIQUID FORMULATIONS WITH HIGH	:	
CONCENTRATION OF HUMAN GROWTH	:	
HORMONE . . .	:	

This is in response to applicant's "Petition Under 37 CFR 1.47(a)" filed 16 December 2005.

BACKGROUND

On 08 July 2003, applicant filed international application PCT/EP03/07349, which claimed priority of an earlier United States application filed 09 July 2002. A copy of the international application was communicated to the USPTO from the International Bureau on 15 January 2004. The thirty-month period for paying the basic national fee in the United States expired on 09 January 2005.

On 07 January 2005, applicant filed national stage papers in the United States Designated/Elected Office (DO/EO/US). The submission was accompanied by, *inter alia*, the basic national fee required by 35 U.S.C. 371(c)(1).

On 25 July 2005, the DO/EO/US mailed a Notification of Missing Requirements Under 35 U.S.C. 371 (Form PCT/DO/EO/905), which indicated that an oath or declaration in compliance with 37 CFR 1.497 must be filed.

On 16 December 2005, applicant filed the present petition under 37 CFR 1.47(a).

DISCUSSION

A petition under 37 CFR 1.47(a) must be accompanied by: (1) an oath or declaration by each applicant on his or her own behalf and on behalf of the nonsigning joint inventors, (2) factual proof that the missing joint inventors refuse to join in the application or cannot be reached after diligent effort, (3) the fee set forth in §1.17(i), and (4) the last known addresses of the nonsigning joint inventors.

With regard to item (1) above, applicant has submitted a declaration signed by the available inventor on his own behalf and on behalf of the nonsigning inventor.

With regard to item (2) above, MPEP 409.03(d) states in relevant part,

> Where a refusal to sign the application papers is alleged, the circumstances of this refusal must be specified in an affidavit or declaration by the person to whom the refusal was made. Statements by a party not present when an oral refusal is made will not be accepted.
>
> Before a refusal can be alleged, it must be demonstrated that a bona fide attempt was made to present a copy of the application papers (specification, including claims, drawings, and oath or declaration) to the nonsigning inventor for signature. A copy of the application papers should be sent to the last known address of the nonsigning inventor, or, if the nonsigning inventor is represented by counsel, to the address of the nonsigning inventor's attorney.
>
> When there is an express oral refusal, that fact along with the time and place of the refusal must be stated in the affidavit or declaration. When there is an express written refusal, a copy of the document evidencing that refusal must be made part of the affidavit or declaration.
>
> When it is concluded by the 37 CFR 1.47 applicant that a nonsigning inventor's conduct constitutes a refusal, all facts upon which that conclusion is based should be stated in the affidavit or declaration. If there is documentary evidence to support facts alleged in the affidavit or declaration, such evidence should be submitted. Whenever a nonsigning inventor gives a reason for refusing to sign the application oath or declaration, that reason should be stated in the affidavit or declaration.

The petition states that joint inventor Michael Betz refuses to sign the application papers. However, the petition does not adequately demonstrate that a bona fide attempt was made to present a complete copy of the application papers (including specification, claims, drawings, and oath/declaration) to Betz for signature. Although the petition states that Betz was provided with a copy of the present application, the reply letter from Betz mentions only declaration and assignment forms. A copy and translation of the original letter to Betz has not been provided. Because it cannot be determined from the presented evidence that Betz received all of the application papers, it would not be reasonable to conclude at the present time that Betz refuses to join in the application.

With regard to item (3) above, the requisite $200.00 petition fee will be charged to Deposit Account No. 19--0134 as authorized in the petition.

With regard to item (4) above, the petition states the last known address of the nonsigning inventor.

CONCLUSION

For the reasons above, the petition under 37 CFR 1.47(a) is DISMISSED without prejudice.

If reconsideration on the merits of this petition is desired, a proper response must be filed within TWO (2) MONTHS from the mail date of this decision. Extensions of time are available under 37 CFR 1.136(a). Any reconsideration request should include a cover letter entitled "Renewed Petition Under 37 CFR 1.47(a)". No additional petition fee is required.

Please direct further correspondence with respect to this matter to Mail Stop PCT, Commissioner for Patents, Office of PCT Legal Administration, P.O. Box 1450, Alexandria, Virginia 22313-1450, with the contents of the letter marked to the attention of the Office of PCT Legal Administration.

Bryan Tung
PCT Legal Examiner
PCT Legal Office

Telephone: 571-272-3303
Facsimile: 571-273-0459

28 FEB 2006

#2

UNITED STATES PATENT AND TRADEMARK OFFICE

COMMISSIONER FOR PATENTS
UNITED STATES PATENT AND TRADEMARK OFFICE
P.O. BOX 1450
ALEXANDRIA, VA 22313-1450
www.uspto.gov

NOVARTIS
CORPORATE INTELLECTUAL PROPERTY
ONE HEALTH PLAZA 104/3
EAST HANOVER, NJ 07936-1080

In re Application of BETZ et al	:	
U.S. Application No.: 10/520,568	:	
PCT Application No.: PCT/EP03/07349	:	
Int. Filing Date: 08 July 2003	:	DECISION
Priority Date Claimed: 09 July 2002	:	
Attorney Docket No.: BP/G-32575A/BCK	:	
For: LIQUID FORMULATIONS WITH HIGH	:	
CONCENTRATION OF HUMAN GROWTH	:	
HORMONE . . .	:	

This is in response to applicant's "Renewed Petition Under 37 CFR 1.47(a)" filed 17 February 2006.

BACKGROUND

On 08 July 2003, applicant filed international application PCT/EP03/07349, which claimed priority of an earlier United States application filed 09 July 2002. A copy of the international application was communicated to the USPTO from the International Bureau on 15 January 2004. The thirty-month period for paying the basic national fee in the United States expired on 09 January 2005.

On 07 January 2005, applicant filed national stage papers in the United States Designated/Elected Office (DO/EO/US). The submission was accompanied by, *inter alia*, the basic national fee required by 35 U.S.C. 371(c)(1).

On 25 July 2005, the DO/EO/US mailed a Notification of Missing Requirements Under 35 U.S.C. 371 (Form PCT/DO/EO/905), which indicated that an oath or declaration in compliance with 37 CFR 1.497 must be filed.

On 16 December 2005, applicant filed a petition under 37 CFR 1.47(a).

On 24 January 2006, this Office mailed a decision dismissing the 16 December 2005 petition.

On 17 February 2006, applicant filed the present renewed petition under 37 CFR 1.47(a).

DISCUSSION

A petition under 37 CFR 1.47(a) must be accompanied by: (1) an oath or declaration by each applicant on his or her own behalf and on behalf of the nonsigning joint inventors, (2) factual proof that the missing joint inventors refuse to join in the application or cannot be reached after diligent effort, (3) the fee set forth in §1.17(i), and (4) the last known addresses of the nonsigning joint inventors.

Applicant has previously satisfied items (1), (3), and (4) above.

With regard to item (2) above, MPEP 409.03(d) states in relevant part,

> Where a refusal to sign the application papers is alleged, the circumstances of this refusal must be specified in an affidavit or declaration by the person to whom the refusal was made. Statements by a party not present when an oral refusal is made will not be accepted.
>
> Before a refusal can be alleged, it must be demonstrated that a bona fide attempt was made to present a copy of the application papers (specification, including claims, drawings, and oath or declaration) to the nonsigning inventor for signature. A copy of the application papers should be sent to the last known address of the nonsigning inventor, or, if the nonsigning inventor is represented by counsel, to the address of the nonsigning inventor's attorney.
>
> When there is an express oral refusal, that fact along with the time and place of the refusal must be stated in the affidavit or declaration. When there is an express written refusal, a copy of the document evidencing that refusal must be made part of the affidavit or declaration.
>
> When it is concluded by the 37 CFR 1.47 applicant that a nonsigning inventor's conduct constitutes a refusal, all facts upon which that conclusion is based should be stated in the affidavit or declaration. If there is documentary evidence to support facts alleged in the affidavit or declaration, such evidence should be submitted. Whenever a nonsigning inventor gives a reason for refusing to sign the application oath or declaration, that reason should be stated in the affidavit or declaration.

The petition states that joint inventor Michael Betz refuses to sign the application papers. However, the petition does not adequately demonstrate that a bona fide attempt was made to present a complete copy of the application papers (including specification, claims, drawings, and oath/declaration) to Betz for signature. Although the petition states that Betz was provided with a copy of the present application, the reply letter from Betz mentions only declaration and assignment forms. As stated in the decision mailed 24 January 2006, a copy and translation of the original letter to Betz (i.e. the letter to which Betz responded to on 17 December 2004) has not been provided. If a copy of such letter cannot be obtained, then applicant should submit an affidavit from the person who sent the letter to Betz. Because it cannot be determined from the

presented evidence that Betz received all of the application papers, it would not be reasonable to conclude at the present time that Betz refuses to join in the application.

CONCLUSION

For the reasons above, the petition under 37 CFR 1.47(a) is DISMISSED without prejudice.

If reconsideration on the merits of this petition is desired, a proper response must be filed within TWO (2) MONTHS from the mail date of this decision. Extensions of time are available under 37 CFR 1.136(a). Any reconsideration request should include a cover letter entitled "Renewed Petition Under 37 CFR 1.47(a)". No additional petition fee is required.

Please direct further correspondence with respect to this matter to Mail Stop PCT, Commissioner for Patents, Office of PCT Legal Administration, P.O. Box 1450, Alexandria, Virginia 22313-1450, with the contents of the letter marked to the attention of the Office of PCT Legal Administration.

Bryan Tung
PCT Legal Examiner
PCT Legal Office

Telephone: 571-272-3303
Facsimile: 571-273-0459

#6

UNITED STATES PATENT AND TRADEMARK OFFICE

Commissioner for Patents
United States Patent and Trademark Office
P.O. Box 1450
Alexandria, VA 22313-1450
www.uspto.gov

15 FEB 2006

NOVARTIS
CORPORATE INTELLECTUAL PROPERTY
ONE HEALTH PLAZA 104/3
EAST HANOVER NJ 07936-1080

In re Application of	:	
BETZ et al.	:	
Application No.: 10/520,569	:	DECISION
PCT No.: PCT/EP03/07347	:	
Int. Filing Date: 08 July 2003	:	
Priority Date: 09 July 2002	:	
Attorney Docket No.: BP/G-32574A/BCK	:	
For: LIQUID FORMULATION WITH HIGH	:	
CONCENTRATION OF HUMAN GROWTH HORMONE	:	
(HGH) COMPRISING 1,2- PROPYLENE PHENOL	:	

This is a decision on applicants' petition under 37 CFR 1.47(a) filed 29 November 2005 in the United States Patent and Trademark Office (USPTO).

BACKGROUND

On 08 July 2003, applicants filed international application PCT/EP03/07347, which designated the United States and claimed a priority date of 09 July 2002. A copy of the international application was communicated from the International Bureau to the USPTO on 15 January 2004. The thirty-month period for paying the basic national fee in the United States expired at midnight on 10 January 2005 (09 January 2005 being a Sunday).

On 07 January 2005, applicants filed a submission for entry into the national stage in the United States which was accompanied by, *inter alia*, the U.S. Basic National Fee.

On 29 June 2005, the United States Designated/Elected Office (DO/EO/US) mailed a NOTIFICATION OF MISSING REQUIREMENTS UNDER 35 U.S.C. 371 (Form PCT/DO/EO/905) indicating, *inter alia*, that an oath or declaration of the inventors in compliance with 37 CFR 1.497(a)-(b) and the surcharge under 37 CFR 1492(e) for providing the oath or declaration later than thirty months from the priority date were required.

On 29 November 2005, applicants filed the instant petition under 37 CFR 1.47(a) which was accompanied by, *inter alia*, a declaration of the inventors, the surcharge under 37 CFR

1.492(e) for providing the declaration of inventors later than thirty months from the priority date, a petition/fee for a three month extension of time, a copy of an untranslated letter from Dr. Peter Gasteiger to Dr. Michael Betz, and a copy of an untranslated letter from Dr. Michael Betz to Biljana Colovic.

On 30 November 2005, applicants filed English translations of the letters filed 29 November 2005.

DISCUSSION

A petition under 37 CFR 1.47(a) must be accompanied by: (1) the fee under 37 CFR 1.17(h); (2) factual proof that the missing joint inventor refuses to execute the application or cannot be reached after diligent effort; (3) a statement of the last known address of the missing inventor; and (4) an oath or declaration by each 37 CFR 1.47(a) applicant on his or her own behalf and on behalf of the non-signing joint inventor.

As to item (1), the petition fee of $200 has been charged to Deposited Account 19-0134. Accordingly, item (1) has been met.

Items (2)-(4) have also been satisfied.

CONCLUSION

For the above reasons, applicants' renewed petition under 37 CFR 1.47(a) is **GRANTED**.

As provided in 37 CFR 1.47(a), a notice of the filing of this application will be forwarded to non-signing inventor at his last known address of record.

A notice of the filing of the application under 37 CFR 1.47(a) will be published in the Official Gazette.

This application is being forwarded to the National Stage Processing Branch of the Office of PCT Operations to continue national stage processing of the application, including the accordation of a 35 U.S.C. §§371(c)(1), (c)(2), and (c)(4) date of **29 November 2005**.

Daniel Stemmer
Legal Examiner
PCT Legal Affairs
Office of Patent Cooperation Treaty
Legal Administration
Telephone: (571) 272-3301
Facsimile: (571) 273-0459

UNITED STATES PATENT AND TRADEMARK OFFICE

Commissioner for Patents
United States Patent and Trademark Office
P.O. Box 1450
Alexandria, VA 22313-1450
www.uspto.gov

MICHAEL BETZ
JAGERSTRASSE 1
8200 SCHAFFHAUSEN
SWITZERLAND

In re Application of
BETZ et al.
Application No.: 10/520,569
PCT No.: PCT/EP03/07347
Int. Filing Date: 08 July 2003
Priority Date: 09 July 2002
Attorney Docket No.: BP/G-32574A/BCK
For: LIQUID FORMULATION WITH HIGH CONCENTRATION OF HUMAN GROWTH HORMONE (HGH) COMPRISING 1,2- PROPYLENE PHENOL

Dear Mr. Betz:

You are named as an inventor in the above-captioned United States national stage application, filed under the provisions of 37 CFR 1.47(a) and 35 U.S.C. 116. Should a patent be granted, you will be designated as an inventor.

As a named inventor, you are entitled to inspect any paper in the file wrapper of the application, order copies of all or any part thereof (at a prepaid cost per 37 CFR 1.19) or to make your position of record in the application. Alternatively, you may arrange to do any of the preceding through a registered patent agent or attorney presenting written authorization from you. Joining in the application would entail the filing of an appropriate oath or declaration by you pursuant to 37 CFR 1.63.

Daniel Stemmer
PCT Legal Examiner
PCT Legal Affairs
Office of Patent Cooperation Treaty
Legal Administration
Telephone: (571) 272-3301
Facsimile: (571) 273-0459

NOVARTIS
CORPORATE INTELLECTUAL PROPERTY
ONE HEALTH PLAZA 104/3
EAST HANOVER NJ 07936-1080

30 JUN 2006

#5

UNITED STATES PATENT AND TRADEMARK OFFICE

Commissioner for Patents
United States Patent and Trademark Office
P.O. Box 1450
Alexandria, VA 22313-1450
www.uspto.gov

NOVARTIS
CORPORATE INTELLECTUAL PROPERTY
ONE HEALTH PLAZA 104/3
EAST HANOVER NJ 07936-1080

In re Application of	:	
BETZ, Michael et al.	:	
Application No.: 10/520,570	:	
PCT No.: PCT/EP03/07346	:	DECISION ON
Int. Filing Date: 08 July 2003	:	
Priority Date: 09 July 2002	:	PETITION
Attorney Docket No.: BP/G-32576A/BCK	:	
For: LIQUID FORMULATIONS WITH A HIGH CONCENTRATION OF HUMAN GROWTH HORMONE (HGH) COMPRISING GLYCINE	:	UNDER 37 CFR 1.47(a)

This is a decision on applicants' "Petition Under 37 CFR 1.47(a)," filed in the United States Patent and Trademark Office (USPTO) on 16 December 2005.

BACKGROUND

On 08 July 2003, applicants filed international application PCT/EP03/07346, which claimed a priority date of 09 July 2002. A copy of the international application was transmitted to the Office on 15 January 2004. The thirty-month period for paying the basic national fee in the United States expired at midnight on 09 January 2005.

On 07 January 2005, applicants filed a submission for entry into the national stage in the United States which was accompanied by, *inter alia*, the U.S. Basic National Fee.

On 02 August 2005, the Office mailed Notification of Missing Requirements (Form PCT/DO/EO/905) indicating that an oath or declaration and the surcharge for late filing of the oath or declaration were required.

On 16 December 2005, applicants submitted a petition under 37 CFR 1.47(a), which was accompanied by, *inter alia*, a declaration of inventorship and the fee for a three month extension of time.

DISCUSSION

A petition under 37 CFR 1.47 must be accompanied by: (1) the fee under 37 CFR 1.17(h), (2) proof of pertinent facts, namely that the inventor refuses to sign after being presented with the application papers or cannot be reached after diligent effort, (3) a statement of the last known address of the inventor, and (4) an oath or declaration by the 37 CFR 1.47(a) applicant on behalf of himself or herself and the non-signing applicant.

Items (1), (3), and (4) have been satisfied. The $200 petition fee will be charged to deposit account no. 19-0134, as authorized. Applicants list Michael Betz's address as Jagerstrasse 1, 8200 Schaffhauser, Switzerland. The declaration complies with 37 CFR 1.497(a)-(b) and 37 CFR 1.47(a).

Item (2) has not been satisfied. Applicants have not furnished evidence of receipt of the complete copy of the application papers, including the declaration, by the non-signing inventor. The inventor acknowledges receipt of assignment documents in his letter, not the application papers and declaration. A declaration from someone with firsthand knowledge of the facts recited therein should be provided from the person who presented the papers to the non-signing inventor or the person who prepared the mailing sent to the inventor. A return mail receipt or a declaration from someone who spoke with the inventor confirming the receipt of the documents or other supporting documentation supporting applicants' allegation of refusal to join after presentation with a complete copy of the application papers should be included. MPEP 409.03(d).

CONCLUSION

For the above reasons, applicants' petition under 37 CFR 1.47(a) is **DISMISSED** without prejudice.

If reconsideration on the merits of this petition is desired, a proper response must be filed within TWO (2) MONTHS from the mail date of this decision. Failure to timely file the proper response will result in abandonment of this application. Any reconsideration request should include a cover letter entitled "Renewed Petition Under 37 CFR 1.47(a)." No additional petition fee is required.

Any further correspondence with respect to this matter should be addressed to the Mail Stop PCT, Commissioner for Patents, Office of PCT Legal Administration, P.O. Box 1450, Alexandria, Virginia 22313-1450, with the contents of the letter marked to the attention of the Office of PCT Legal Administration.

Erin P. Thomson

Erin P. Thomson
Attorney Advisor
PCT Legal Administration

Telephone: 571-272-3292
Facsimile: 571-273-0459

#7

UNITED STATES PATENT AND TRADEMARK OFFICE

Commissioner for Patents
United States Patent and Trademark Office
P.O. Box 1450
Alexandria, VA 22313-1450
www.uspto.gov

16 OCT 2006

NOVARTIS
CORPORATE INTELLECTUAL PROPERTY
ONE HEALTH PLAZA 104/3
EAST HANOVER NJ 07936-1080

In re Application of	:	
BETZ, Michael et al.	:	
Application No.: 10/520,570	:	
PCT No.: PCT/EP03/07346	:	DECISION ON
Int. Filing Date: 08 July 2003	:	
Priority Date: 09 July 2002	:	PETITION
Attorney Docket No.: BP/G-32576A/BCK	:	
For: LIQUID FORMULATIONS WITH A HIGH CONCENTRATION OF HUMAN GROWTH HORMONE (HGH) COMPRISING GLYCINE	:	UNDER 37 CFR 1.47(a)

This is a decision on applicants' submission of an executed declaration, filed in the United States Patent and Trademark Office (USPTO) on 16 August 2006.

BACKGROUND

On 30 June 2006, the Office mailed Decision On Petition Under 37 CFR 1.47(a), dismissing applicants' petition without prejudice.

On 16 August 2006, applicants submitted an executed declaration of the previously non-signing inventor.

DISCUSSION

The 16 August 2006 declaration satisfies 37 CFR 1.497(a)-(b).

CONCLUSION

For the above reasons, applicants' petition under 37 CFR 1.47(a) is **DISMISSED AS MOOT**.

This application is being forwarded to the National Stage Processing Branch of the Office of PCT Operations to continue national stage processing of the application. The application has a 35 U.S.C. §371(c)(1), (c)(2) and (c)(4) date of **16 August 2006**.

Erin P. Thomson

Erin P. Thomson
Attorney Advisor
PCT Legal Administration

Telephone: 571-272-3292
Facsimile: 571-273-0459

SPE RESPONSE FOR CERTIFICATE OF CORRECTION

Paper No.: _____

DATE : 10-20-08

TO SPE OF : ART UNIT 1623

SUBJECT : Request for Certificate of Correction for Appl. No.: 10/520580 Patent No.: 7387999

Please respond to this request for a certificate of correction within 7 days.

FOR IFW FILES:

Please review the requested changes/corrections as shown in the **COCIN** document(s) in the IFW application image. No new matter should be introduced, nor should the scope or meaning of the claims be changed.

Please complete the response (see below) and forward the completed response to scanning using document code **COCX**.

FOR PAPER FILES:

Please review the requested changes/corrections as shown in the attached certificate of correction. Please complete this form (see below) and forward it with the file to:

Certificates of Correction Branch (CofC)
South Tower - 9A22
Palm Location 7580

Certificates of Correction Branch
703-308-9390 ext. 123

Thank You For Your Assistance

The request for issuing the above-identified correction(s) is hereby:
Note your decision on the appropriate box.

- ☐ **Approved** — All changes apply.
- ☒ **Approved in Part** — Specify below which changes **do not** apply.
- ☐ **Denied** — State the reasons for denial below.

Comments: The changes at column 10, libe 27 and column 11, line 13 are incomplete, and therefore not ~~admitted.~~ approved. Additional missing commas need to be inserted between variables to make the correction complete.

LECRANE:lec 08/12/2009.

SPE

1623
Art Unit

PTOL-306 (REV. 7/03)

U.S. DEPARTMENT OF COMMERCE Patent and Trademark Office

UNITED STATES PATENT AND TRADEMARK OFFICE

Commissioner for Patents
United States Patent and Trademark Office
P.O. Box 1450
Alexandria, VA 22313-1450
www.uspto.gov

28 AUG 2007

John S. Pratt
Kilpatrick Stockton, LLP
1100 Peachtree Street, Suite 2800
Atlanta, GA 30309-4530

In re Application of	:	
KYONO	:	
Application No.: 10/520,607	:	DECISION ON PETITION
PCT No.: PCT/JP04/00089	:	
Int. Filing Date: 09 January 2004	:	UNDER 37 CFR 1.10(d)
Priority Date: 28 January 2003	:	
Atty. Docket No.: 44471/309937	:	
For: POWER SUPPLY DEVICE	:	

This is a decision on applicant's "REQUEST TO CORRECT FILING DATE" filed 19 January 2007 in the United States Patent and Trademark Office (USPTO). The request is being treated as a petition under 37 CFR 1.10. No petition fee is required.

BACKGROUND

On 09 January 2004, applicant filed international application PCT/JP04/00089 which claimed priority to an earlier Japanese application filed 28 January 2003. A copy of the International Application was forwarded to the United States Patent and Trademark Office (USPTO) from the International Bureau (IB) on 12 August 2004. Pursuant to 37 CFR 1.495, the thirty-month period for paying the basic national fee in the United States expired at midnight on 28 July 2005.

On 06 January 2005, applicant filed a transmittal letter for entry into the national stage in the United States, which was accompanied by the requisite basic national fee as required by 35 U.S.C. 371(c)(1); an English translation of the international application as filed; an executed declaration of the inventor; an assignment document for recording and an Application Data Sheet.

On 16 November 2005, applicant was mailed a "Notification of Acceptance" (Form PCT/DO/EO/903) indicating a 371 date of 06 January 2005.

On 19 January 2007, applicant filed the present petition and request for corrected filing receipt indicating that the papers at issue, satisfying the 35 U.S.C. 371 requirements, were filed 07 January 2007.

DISCUSSION

37 CFR 1.10(a) states:

(1)Any correspondence received by the U.S. Patent and Trademark Office (USPTO) that was delivered by the "Express Mail Post Office to Addressee" service of the United States Postal Service (USPS) will be considered filed with the USPTO on the date of deposit with the USPS.

(2) The date of deposit with USPS is shown by the "date in" on the "Express Mail" label or other official USPS notation. If the USPS deposit date cannot be determined, the correspondence will be accorded the USPTO receipt date as the filing date. See § 1.6(a).

A review of the Express Mail label for the subject mailing, EV707248153US shows a "date-in" date of "1-6-05." Thus, the USPTO did correctly accorded a 371 date of 06 January 2005 pursuant to 37 CFR 1.10(a). 37 CFR 1.10(d) provides relief in cases where applicant can show an error or discrepancy between the date of deposit and the date written in as the "date-in" date by the USPS.

37 CFR 1.10(d) states:

Any person filing correspondence under this section that was received by the Office and delivered by the "Express Mail Post Office to Addressee" service of the USPS, who can show that the "date-in" on the "Express Mail" mailing label or other official notation entered by the USPS was incorrectly entered or omitted by the USPS, may petition the Commissioner to accord the correspondence a filing date as of the date the correspondence is shown to have been deposited with the USPS, provided that:

(1) The petition is filed promptly after the person becomes aware that the Office has accorded, or will accord, a filing date based upon an incorrect entry by the USPS;

(2) The number of the "Express Mail" mailing label was placed on the paper(s) or fee(s) that constitute the correspondence prior to the original mailing by "Express Mail"; and

(3) The petition includes a showing which establishes, to the satisfaction of the Commissioner, that the requested filing date was the date the correspondence was deposited in "Express Mail Post Office to Addressee" service prior to the last schedule pickup for that day. Any showing pursuant to this paragraph must be corroborated by evidence from the USPS or that came into being after deposit and within one business day of the correspondence in the "Express Mail Post Office to Addressee" service of the USPS.

Applicant has satisfied items 1 and 2 above.

Regarding item 3, applicant has not provided sufficient evidence to satisfy item 3. Specifically, applicant has only provided a copy of the Express Mail mailing label. While, this

label contains a USPS barrel stamp with a date of 07 January 2005, the same label has a "date-in" date of "1-6-05." Thus, the USPS information is in conflict and therefore does not conclusively show that the date-in date is incorrect.

For the reasons above, it is not possible to grant applicant's petition under 37 CFR 1.10(d) at this time.

CONCLUSION

For the reasons stated above, applicant's petition under 37 CFR 1.10(d) is **DISMISSED**.

Any reconsideration on the merits of this petition must be filed within **TWO (2) MONTHS** from the mail date of this decision. Any reconsideration request should include a cover letter entitled "Renewed Petition Under 37 CFR 1.10(d)" Extensions of time may be obtained under 37 CFR 1.136(a).

Any further correspondence with respect to this matter should be directed to Mail Stop PCT, Commissioner for Patents, Office of PCT Legal Administration, P.O. Box 1450, Alexandria, Virginia 22313-1450, with the contents of the letter marked to the attention of the Office of PCT Legal Administration.

Derek A. Putonen
Attorney Advisor
Office of PCT Legal Administration
Tel: (571) 272-3294
Fax: (571) 273-0459

2 7 NOV 2007

UNITED STATES PATENT AND TRADEMARK OFFICE

Commissioner for Patents
United States Patent and Trademark Office
P.O. Box 1450
Alexandria, VA 22313-1450
www.uspto.gov

John S. Prat
Kilpatrick Stockton, LLP
1100 Peachtree Street, Suite 2800
Atlanta, GA 30309-4530

In re Application of KYONO Application No.: 10/520,607 PCT No.: PCT/JP04/00089 Int. Filing Date: 09 January 2004 Priority Date: 28 January 2003 Atty Docket No.: 44471/309937 For: POWER SUPPLY DEVICE	DECISION ON PETITION UNDER 37 CFR 1.10(d)

This decision is in response to applicant's "Renewed Petition Under 37 CFR 1.10(d)" filed 23 October 2007 in the United States Patent and Trademark Office (USPTO).

BACKGROUND

On 28 August 2007, applicant was mailed a decision dismissing applicant's petition under 37 CFR 1.10(d) to accord a 35 U.S.C. 371 date of 07 January 2005. Applicant was afforded two months to file any request for reconsideration.

On 23 October 2007, applicant filed the present renewed petition under 37 CFR 1.10 (d).

DISCUSSION

As detailed in the decision mailed 28 August 2007, in order to be granted, a petition under 37 CFR 1.10(d) must be:

1) Filed promptly after the person becomes aware that the Office has accorded or will accord, a filing date based upon an incorrect entry by the USPS;

2) The number of the "Express Mail" mailing label was placed on the filed papers; and

3) The petition includes a showing to the satisfaction of the Director that the requested filing date was the date the correspondence was deposited in the "Express Mail Post Office to Addressee" service prior to the last scheduled pickup for that day.

Applicant previously satisfied items 1 and 2.

Regarding item 3, as previously explained, while the Express Mail mailing label is stamped with a USPS barrel stamp with a date of 07 January 2005, the same label has a "date-in" date of

"1-6-05" the date accorded by the USPTO. As this information was in conflict and the label was the only evidence supplied which came from the USPS, the initial petition under 37 CFR 1.10(d) was dismissed. (Applicant also included a copy of the postcard submitted with the filing; however this item was prepared prior to the mailing of the subject Express Mail mailing). Applicant has presently provided a declaration of Mr. Alex Carter and a letter from counsel dated 07 January 2005.

Regarding the declaration of Mr. Carter, it does not appear that Mr. Carter has any firsthand knowledge of the depositing of the subject Express Mail mailing as he did not begin his present position until June, 2005 while the papers in question were mailed in January, 2005. In addition, Mr. Carter states that the firm mail log for January, 2005 could not be located.

As to the letter of counsel dated 07 January 2005; while this letter does constitute a business record, it does not contain the necessary information that one would find in a mail log. The Manual of Patent Examining Procedure (MPEP) section 513 states:

Evidence that came into being within one day after the deposit of the correspondence as "Express Mail" may be in the form of a log book which contains information such as the "Express Mail" number; the application number, attorney docket number or other such file identification number; the place, date and time of deposit; the time of the last scheduled pick-up for that date and place of deposit; the depositor's initials or signature; and the date and time of entry in the log.

While an actual mail log entry is not required, supporting evidence which came into being within one day after deposit should contain the information listed above. The enclosed letter does not. As such, it is not possible to grant applicant's renewed petition.

CONCLUSION

For the reasons stated above, applicant's renewed petition under 37 CFR 1.10(d) is **DISMISSED**.

Any reconsideration on the merits of this petition must be filed within **TWO (2) MONTHS** from the mail date of this decision. Any reconsideration request should include a cover letter entitled "Renewed Petition Under 37 CFR 1.10(d)." No additional petition fee is required.

Any further correspondence with respect to this matter should be directed to Mail Stop PCT, Commissioner for Patents, Office of PCT Legal Administration, P.O. Box 1450, Alexandria, Virginia 22313-1450, with the contents of the letter marked to the attention of the Office of PCT Legal Administration

Derek A. Putonen
Attorney Advisor
Office of PCT Legal Administration
Tel: 571-272-3294
Fax: 571-273-0459

UNITED STATES PATENT AND TRADEMARK OFFICE

Commissioner for Patents
United States Patent and Trademark Office
P.O. Box 1450
Alexandria, VA 22313-1450
www.uspto.gov

17 JAN 2008

John S. Prat
Kilpatrick Stockton, LLP
1100 Peachtree Street, Suite 2800
Atlanta, GA 30309-4530

In re Application of	:	
KYONO	:	
Application No.: 10/520,607	:	DECISION ON PETITION
PCT No.: PCT/JP04/00089	:	
Int. Filing Date: 09 January 2004	:	UNDER 37 CFR 1.10(d)
Priority Date: 28 January 2003	:	
Atty Docket No.: 44471/309937	:	
For: POWER SUPPLY DEVICE	:	

This decision is in response to applicant's "Renewed Petition Under 37 CFR 1.10(d)" filed 04 January 2008 in the United States Patent and Trademark Office (USPTO).

BACKGROUND

On 27 November 2007, applicant was mailed a decision dismissing applicant's petition under 37 CFR 1.10(d) to accord a 35 U.S.C. 371 date of 07 January 2005. Applicant was afforded two months to file any request for reconsideration.

On 04 January 2008, applicant filed the present renewed petition under 37 CFR 1.10 (d).

DISCUSSION

As detailed in the decision mailed 27 November 2007, in order to be granted, a petition under 37 CFR 1.10(d) must be:

1) Filed promptly after the person becomes aware that the Office has accorded or will accord, a filing date based upon an incorrect entry by the USPS;

2) The number of the "Express Mail" mailing label was placed on the filed papers; and

3) The petition includes a showing to the satisfaction of the Director that the requested filing date was the date the correspondence was deposited in the "Express Mail Post Office to Addressee" service prior to the last scheduled pickup for that day.

Applicant previously satisfied items 1 and 2.

Regarding item 3, with the filing of the present renewed petition and supporting material, applicant has satisfied item 3. Specifically, applicant has presently filed a copy of the Express

Mail Corporate Account Mailing Statement from the U.S. Postal Service showing that the Express Mail parcel in question, number EV334679378US was deposited for mailing on 07 January 2005. As such, it is proper to grant applicant's renewed petition at this time.

CONCLUSION

For the reasons stated above, applicant's renewed petition under 37 CFR 1.10(d) is **GRANTED**.

This application will be forwarded to the PCT Operations, National Stage processing branch for processing consistent with this decision; specifically the preparation and mailing of a new "Notification of Acceptance" (Form PCT/DO/EO/903) and corrected filing receipt indicating a date of **07 January 2005** under 35 U.S.C. 371(c)(1), (c)(2) and (c)(4).

Derek A. Putonen
Attorney Advisor
Office of PCT Legal Administration
Tel: 571-272-3294
Fax: 571-273-0459

UNITED STATES PATENT AND TRADEMARK OFFICE

UNITED STATES DEPARTMENT OF COMMERCE
United States Patent and Trademark Office
Address: COMMISSIONER FOR PATENTS
P.O. Box 1450
Alexandria, Virginia 22313-1450
www.uspto.gov

FOLEY AND LARDNER LLP
SUITE 500
3000 K STREET NW
WASHINGTON, DC 20007

Mail Date: 04/21/2010

Applicant	: Ingo Kalliske	: DECISION ON REQUEST FOR
Patent Number	: 7614472	: RECALCULATION of PATENT
Issue Date	: 11/10/2009	: TERM ADJUSTMENT IN VIEW
Appliction No	: 10/520,627	: OF WYETH AND NOTICE OF INTENT TO
Filed	: 06/30/2005	: ISSUE CERTIFICATE OF CORRECTION
		:

The Request for Recalculation is **GRANTED** to the extent indicated.

The patent term adjustment has been determined to be **923** days. The USPTO will *sua sponte* issue a certificate of correction reflecting the amount of PTA days determined by the recalculation.

Prior to the issuance of the certificate of correction, the USPTO will afford patentee an opportunity to be heard and request reconsideration. Accordingly, patentee has **one month or thirty (30) days**, whichever is longer, to file a request for reconsideration of this patent term adjustment calculation. See 35 U.S.C. 154(b)(3)(B)(ii) and 37 CFR 1.322(a)(4). No extensions of time will be granted under 37 CFR 1.136.

Patentee should use document code PET.OP if electronically filing a request for reconsideration of this patent term adjustment calculation. The patentee must also include the information required by 37 CFR 1.705(b)(2) and the fee required by 37 CFR 1.18(e). If patentee does not file a timely request for reconsideration of this patent term adjustment calculation including the information required by 37 CFR 1.705(b)(2) and the fee required by 37 CFR 1.18(e), the USPTO will issue a certificate of correction reflecting the PTA determination noted above.

Patentee should be aware that in order to preserve the right to review in the United States District Court for the District of Columbia of the USPTO patent term adjustment determination, patentee must ensure that he or she also take the steps required under 35 U.S.C. 154(b)(4)(A) in a timely manner. Nothing in the request for recalculation should be construed as providing an alternative time frame for commencing a civil action under 35 U.S.C. 154(b)(4)(A).

Any questions concerning this decision should be directed to the Office of Patent Legal Administration at 571-272-7702.

SPE RESPONSE FOR CERTIFICATE OF CORRECTION

Paper No.:20080509

DATE : June 9, 2008

TO SPE OF : ART UNIT 1796

SUBJECT : Request for Certificate of Correction on Patent No.: 7019057B

A response is requested with respect to the accompanying request for a certificate of correction.

Please complete this form and return with file, within **7** days to:
Certificates of Correction Branch - PK 3-910
Palm location **7590** - Tel. No. 305-8201

With respect to the change(s) requested, correcting Office and/or Applicant's errors, should the patent read as shown in the certificate of correction? No new matter should be introduced, nor should the scope or meaning of the claims be changed.

Thank You For Your Assistance **Certificates of Correction Branch**

The request for issuing the above-identified correction(s) is hereby:
Note your decision on the appropriate box.

☒ **Approved** **All** changes apply.

☐ **Approved in Part** Specify below which changes **do not** apply.

☐ **Denied** State the reasons for denial below.

Comments:

SPE: /Harold Pyon/ **Art Unit** 1796

UNITED STATES PATENT AND TRADEMARK OFFICE

Commissioner for Patents
United States Patent and Trademark Office
P.O. Box 1450
Alexandria, VA 22313-1450
www.uspto.gov

MORRISON & FOERSTER LLP
1650 TYSONS BOULEVARD
SUITE 400
MCLEAN, VA 22102

COPY MAILED

FEB 11 2008

OFFICE OF PETITIONS

In re Application of
Thomas Belling, et al.
Application No. 10/520,630
Filed: August 19, 2005
Attorney Docket No. 449122079000

DECISION ON PETITION
TO WITHDRAW
FROM RECORD

This is a decision on the Request to Withdraw as attorney or agent of record under 37 C.F.R. § 1.36(b) filed August 31, 2007.

The request is **DISMISSED** as moot.

A review of the file record indicates that the power of attorney to Morrison & Foerster, LLP has been revoked by the assignee of the patent application on October 29, 2007. Accordingly, the request to withdraw under 37 C.F.R. § 1.36(b) is moot.

All future communications from the Office will continue to be directed to the below-listed address until otherwise notified by applicant.

Telephone inquires concerning this decision should be directed to undersigned at 571-272- 1642.

April M. Wise
Petitions Examiner
Office of Petitions

cc: BELL, BOYD & LLOYD, LLP
PO BOX 1135
CHICAGO, IL 60690

UNITED STATES PATENT AND TRADEMARK OFFICE

UNITED STATES DEPARTMENT OF COMMERCE
United States Patent and Trademark Office
Address: COMMISSIONER FOR PATENTS
P.O. Box 1450
Alexandria, Virginia 22313-1450
www.uspto.gov

APPLICATION NUMBER	FILING OR 371(C) DATE	FIRST NAMED APPLICANT	ATTY. DOCKET NO./TITLE
10/520,630	08/19/2005	Thomas Belling	449122079000

CONFIRMATION NO. 9541

POWER OF ATTORNEY NOTICE

25227
MORRISON & FOERSTER LLP
1650 TYSONS BOULEVARD
SUITE 400
MCLEAN, VA 22102

OC000000028230636

Date Mailed: 02/11/2008

NOTICE REGARDING CHANGE OF POWER OF ATTORNEY

This is in response to the Power of Attorney filed 10/29/2007.

- The Power of Attorney to you in this application has been revoked by the assignee who has intervened as provided by 37 CFR 3.71. Future correspondence will be mailed to the new address of record(37 CFR 1.33).

/amwise/

Office of Initial Patent Examination (571) 272-4000 or 1-800-PTO-9199

UNITED STATES PATENT AND TRADEMARK OFFICE

UNITED STATES DEPARTMENT OF COMMERCE
United States Patent and Trademark Office
Address: COMMISSIONER FOR PATENTS
P.O. Box 1450
Alexandria, Virginia 22313-1450
www.uspto.gov

GOODWIN PROCTER LLP
ATTN: PATENT ADMINISTRATOR
620 Eighth Avenue
NEW YORK, NY 10018

Mail Date: 04/20/2010

Applicant	: Mark Plehiers	: DECISION ON REQUEST FOR
Patent Number	: 7595370	: RECALCULATION of PATENT
Issue Date	: 09/29/2009	: TERM ADJUSTMENT IN VIEW
Appliction No	: 10/520,636	: OF WYETH AND NOTICE OF INTENT TO
Filed	: 08/05/2005	: ISSUE CERTIFICATE OF CORRECTION
		:

The Request for Recalculation is **GRANTED** to the extent indicated.

The patent term adjustment has been determined to be **1029** days. The USPTO will *sua sponte* issue a certificate of correction reflecting the amount of PTA days determined by the recalculation.

Prior to the issuance of the certificate of correction, the USPTO will afford patentee an opportunity to be heard and request reconsideration. Accordingly, patentee has **one month or thirty (30) days**, whichever is longer, to file a request for reconsideration of this patent term adjustment calculation. See 35 U.S.C. 154(b)(3)(B)(ii) and 37 CFR 1.322(a)(4). No extensions of time will be granted under 37 CFR 1.136.

Patentee should use document code PET.OP if electronically filing a request for reconsideration of this patent term adjustment calculation. The patentee must also include the information required by 37 CFR 1.705(b)(2) and the fee required by 37 CFR 1.18(e). If patentee does not file a timely request for reconsideration of this patent term adjustment calculation including the information required by 37 CFR 1.705(b)(2) and the fee required by 37 CFR 1.18(e), the USPTO will issue a certificate of correction reflecting the PTA determination noted above.

Patentee should be aware that in order to preserve the right to review in the United States District Court for the District of Columbia of the USPTO patent term adjustment determination, patentee must ensure that he or she also take the steps required under 35 U.S.C. 154(b)(4)(A) in a timely manner. Nothing in the request for recalculation should be construed as providing an alternative time frame for commencing a civil action under 35 U.S.C. 154(b)(4)(A).

Any questions concerning this decision should be directed to the Office of Patent Legal Administration at 571-272-7702.

UNITED STATES PATENT AND TRADEMARK OFFICE

COMMISSIONER FOR PATENTS
UNITED STATES PATENT AND TRADEMARK OFFICE
P.O. BOX 1450
ALEXANDRIA, VA 22313-1450
WWW.USPTO.GOV

Paper No.

Douglas E Frisoli
93 Holmes Road
North Attleboro MA 02760

COPY MAILED

JUN 03 2008

OFFICE OF PETITIONS

In re Application of	:	
Douglas E. Frisoli	:	
Application No. 10/520,671	:	DECISION ON PETITION
Filed: January 6, 2005	:	PURSUANT TO
Attorney Docket Number: DEF-101	:	37 C.F.R. § 1.137(a)
Title: CARD GAME	:	

This is a decision on the petition filed November 1, 2007, pursuant to 37 C.F.R. § 1.137(a), to revive the above-identified application.

The Change of Correspondence Address has been updated and made of record.

The petition is **DISMISSED**.

The above-identified application became abandoned for failure to reply in a timely manner to the non-final Office action, mailed September 11, 2006, which set a shortened statutory period for reply of three months. No response was received, and no extensions of time under the provisions of 37 C.F.R. § 1.136(a) were requested. Accordingly, the above-identified application became abandoned on December 12, 2006. A notice of abandonment was mailed on April 9, 2007.

A grantable petition pursuant to 37 C.F.R. § 1.137(a) must be accompanied by:

(1) The reply required to the outstanding Office action or notice, unless previously filed;
(2) The petition fee as set forth in 37 C.F.R. § 1.17(l);
(3) A showing to the Commissioner that the entire delay in filing the required reply from the due date for the reply until the filing of a grantable petition was unavoidable, and;
(4) Any terminal disclaimer (and fee as set forth in 37 C.F.R. § 1.20(d)) required pursuant to paragraph (d) of this section.

Petition fee requirement

The fee for filing a petition to revive an unintentionally abandoned application under 37 C.F.R. § 1.137(a) is set forth in 37 C.F.R. § 1.17(l) as being $510 for a large entity and $255 for a small entity. There is no record of the petition fee having been received. Therefore, the second requirement of Rule 1.137(a) has not been met.

The payment of the required petition fee is a prerequisite to the filing of a petition to revive pursuant to 37 C.F.R. § 1.137. Therefore, consideration of the merits of the petition before receipt of the filing fee would be premature. See M.P.E.P. § 711.03(c)(III)(B), which sets forth, *in pertinent part*:

> 35 U.S.C. 41(a)(7) provides that a petition for the revival of an unintentionally abandoned application or for the unintentionally delayed payment of the issue fee must be accompanied by the petition fee set forth in 37 CFR 1.17(m), unless the petition is filed under 35 U.S.C. 133 or 151 (on the basis of unavoidable delay), in which case the fee is set forth in 37 CFR 1.17(l). Thus, unless the circumstances warrant the withdrawal of the holding of abandonment (i.e., it is determined that the application is not properly held abandoned), **the payment of a petition fee to obtain the revival of an abandoned application is a statutory prerequisite to revival of the abandoned application, and cannot be waived** (emphasis added).
>
> In addition, the phrase "[o]n filing" in 35 U.S.C. 41(a)(7) means that the petition fee is required for the filing (and not merely the grant) of a petition under 37 CFR 1.137. See H.R. Rep. No. 542, 97th Cong., 2d Sess. 6 (1982), reprinted in 1982 U.S.C.C.A.N. 770 ("[t]he fees set forth in this section are due on filing the petition"). Therefore, the Office: (A) will not refund the petition fee required by 37 CFR 1.17(l) or 1.17(m), regardless of whether the petition under 37 CFR 1.137 is dismissed or denied; and (B) will not reach the merits of any petition under 37 CFR 1.137 lacking the requisite petition fee.

> The phrase "unless the petition is filed under [35 U.S.C.] 133 or 151" signifies that petitions to revive filed on the basis of "unavoidable" delay (under 35 U.S.C. 133 or 151) are a subset of petitions to revive filed on the basis of unintentional delay. That is, "unavoidable" delay and "unintentional" delay are not alternatives; "unavoidable" delay is the epitome of "unintentional" delay. Any petition to revive an abandoned application or lapsed patent must meet the minimal "unintentional" delay threshold, and an applicant need only pay the fee specified in 37 CFR 1.17(l) (rather than the fee specified in 37 CFR 1.17(m)) if the petition is also accompanied by an adequate showing that the entire delay in filing the required reply, from the due date for the reply until the filing of a grantable petition pursuant to 37 CFR 1.137(a), was unavoidable.

Any reply must be submitted within **TWO MONTHS** from the mail date of this decision. Extensions of time under 37 C.F.R. § 1.136(a) are permitted. The reply should include a cover letter entitled "Renewed Petition pursuant to 37 C.F.R. § 1.137(a)." This is not a final agency action within the meaning of 5 U.S.C § 704.

Prior to preparing a response to this decision, Petitioner may wish to review his options of filing a petition pursuant to Rule 1.137(a) and/or 1.137(b). Petitioner may download information about these petitions here: http://www.uspto.gov/web/offices/pac/mpep/documents/0700_711_03_c.htm#sect711.03c

Any submission in response to this decision should indicate in a prominent manner that the attorney handling this matter is Paul Shanoski, and may be submitted by mail[1], hand-delivery[2], or facsimile[3]. Registered users of EFS-Web may alternatively submit a response to this decision via EFS-Web[4].

Telephone inquiries regarding *this decision* should be directed to Senior Attorney Paul Shanoski at (571) 272-3225[5]. All other

---

1 Mail Stop Petition, Commissioner for Patents, United States Patent and Trademark Office, P.O. Box 1450, Alexandria, VA, 22313-1450.
2 Customer Window, Randolph Building, 401 Dulaney Street, Alexandria, VA, 22314.
3 (571) 273-8300- please note this is a central facsimile number.
4 https://sportal.uspto.gov/authenticate/authenticateuserlocalepf.html
5 Petitioner will note that all practice before the Office should be in writing, and the action of the Office will be based exclusively on the written record in the Office. See 37 C.F.R. § 1.2. As such, Petitioner is reminded that no telephone discussion may be controlling or considered authority for any further action(s) of Petitioner.

inquiries concerning examination procedures should be directed to the Technology Center.

/Paul Shanoski/
Paul Shanoski
Senior Attorney
Office of Petitions

UNITED STATES PATENT AND TRADEMARK OFFICE

Commissioner for Patents
United States Patent and Trademark Office
P.O. Box 1450
Alexandria, VA 22313-1450
www.uspto.gov
DIW Feb-09

SIEMENS CORPORATION
INTELLECTUAL PROPERTY DEPARTMENT
170 WOOD AVENUE SOUTH
ISELIN NJ 08830

MAILED

FEB 24 2009

OFFICE OF PETITIONS

In re Application of	:	
Neuhaus et al.	:	DECISION ON PETITION
Application Number: 10/520681	:	
Filing Date: 01/07/2005	:	
Attorney Docket Number:	:	
2002P03767WOUS	:	

This is a decision on the petition filed on January 30, 2009, under 37 CFR 1.137(a),[1] to revive the above-identified application.

The petition is **dismissed**.

Any request for reconsideration of this decision must be submitted within **TWO (2) MONTHS** from the mail date of this decision. Extensions of time under 37 CFR 1.136(a) are permitted. The reconsideration request should include a cover letter entitled "Renewed Petition under 37 CFR 1.137(a)."

---

[1] A grantable petition under 37 CFR 1.137(a) must be accompanied by:

(1) the required reply, unless previously filed; In a nonprovisional application abandoned for failure to prosecute, the required reply may be met by the filing of a continuing application. In a nonprovisional utility or plant application filed on or after June 8, 1995, and abandoned for failure to prosecute, the required reply may also be met by the filing of a request for continued examination in compliance with § 1.114. In an application or patent, abandoned or lapsed for failure to pay the issue fee or any portion thereof, the required reply must be the payment of the issue fee or any outstanding balance thereof. In an application abandoned for failure to pay the publication fee, the required reply must include payment of the publication fee.

(2) the petition fee as set forth in 37 CFR 1.17(l);

(3) a showing to the satisfaction of the Director that the entire delay in filing the required reply from the due date for the reply until the filing of a grantable petition pursuant to 37 CFR 1.137(a) was unavoidable; and

(4) any terminal disclaimer (and fee as set forth in 37 CFR 1.20(d)) required pursuant to 37 CFR 1.137(c)).

The application became abandoned on July 16, 2008, for failure to timely file a response to the non-final Office action mailed on April 15, 2008, which set a three (3) month shortened statutory period for reply. No extensions of the time for reply in accordance with 37 CFR 1.136(a) were obtained. Notice of Abandonment was mailed on January 22, 2009.

Petitioners assert that the non-final Office action mailed on April 15, 2008, was never received. In support, a declaration has been provided by Tracey A. Daniel, counsel's Patent Assistant, stating that a search of the file jacket and docket record where the non-received Office communication would have been stored and entered was made and the search indicates that the Office communication was not received. The declaration states that a copy of the docket record where the non-received Office communication would have been entered had it been received and docketed, is attached hereto.

A review of the record indicates no irregularity in the mailing of the non-final Office action mailed on April 15, 2008, and in the absence of any irregularity in the mailing, there is a strong presumption that the non-final Office action mailed on April 15, 2008 was properly mailed to the address of record. This presumption may be overcome by a showing that the non-final Office action mailed on April 15, 2008 was not in fact received.

MPEP 711.03(c) states, in pertinent part:

> In Delgar v. Schulyer, 172 USPQ 513 (D.D.C. 1971), the court decided that the Office should mail a new Notice of Allowance in view of the evidence presented in support of the contention that the applicant's representative did not receive the original Notice of Allowance. Under the reasoning of Delgar, an allegation that an Office action was never received may be considered in a petition to withdraw the holding of abandonment. If adequately supported, the Office may grant the petition to withdraw the holding of abandonment and remail the Office action. That is, the reasoning of Delgar is applicable regardless of whether an application is held abandoned for failure to timely pay the issue fee (35 U.S.C. 151) or for failure to prosecute (35 U.S.C. 133).
>
> To minimize costs and burdens to practitioners and the Office, the Office has modified the showing required to establish nonreceipt of an Office action. The showing

> required to establish nonreceipt of an Office communication must include a statement from the practitioner describing the system used for recording an Office action received at the correspondence address of record with the USPTO. The statement should establish that the docketing system is sufficiently reliable. It is expected that the record would include, but not be limited to, the application number, attorney docket number, the mail date of the Office action and the due date for the response.
>
> **Practitioner must state that the Office action was not received at the correspondence address of record, and that a search of the practitioner's record(s), including any file jacket or the equivalent, and the application contents, indicates that the Office action was not received. A copy of the record(s) used by the practitioner where the non-received Office action would have been entered had it been received is required.**
>
> **A copy of the practitioner's record(s) required to show non-receipt of the Office action should include the master docket for the firm. That is, if a three month period for reply was set in the nonreceived Office action, a copy of the master docket report showing all replies docketed for a date three months from the mail date of the nonreceived Office action must be submitted as documentary proof of nonreceipt of the Office action. If no such master docket exists, the practitioner should so state and provide other evidence such as, but not limited to, the following: the application file jacket; incoming mail log; calendar; reminder system; or the individual docket record for the application in question.**
>
> (emphasis added)

At the outset, petitioner has not provided a statement from the practitioner to the effect that the the Office action was not received at the correspondence address of record, and that a search of the practitioner's record(s), including any file jacket or the equivalent, and the application contents, indicates that the Office action was not received. Rather, the statement provided is by counsel's Legal Assistant. Any renewed petition

should be accompanied by a proper statement made by the practitioner.

Petitioner has not provided a copy of the master docket for the firm, nor stated whether the docket record provided is a master docket.

A copy of the practitioner's record(s) required to show non-receipt of the Office action should include the master docket for the firm. That is, if a three month period for reply was set in the nonreceived Office action, a copy of the master docket report showing all replies docketed for a date three months from the mail date of the nonreceived Office action must be submitted as documentary proof of nonreceipt of the Office action. If no such master docket exists, the practitioner should so state and provide other evidence such as, but not limited to, the following: the application file jacket; incoming mail log; calendar; reminder system; or the individual docket record for the application in question.

Accordingly, the petition is dismissed, but such dismissal is without predjudice to reconsideration pending submission of the information requested above.

PETITION UNDER 37 CFR 1.137(a)

A grantable petition under 37 CFR 1.137(a) must be accompanied by:

(1) the required reply, unless previously filed; In a nonprovisional application abandoned for failure to prosecute, the required reply may be met by the filing of a continuing application. In a nonprovisional utility or plant application filed on or after June 8, 1995, and abandoned for failure to prosecute, the required reply may also be met by the filing of a request for continued examination in compliance with § 1.114. In an application or patent, abandoned or lapsed for failure to pay the issue fee or any portion thereof, the required reply must be the payment of the issue fee or any outstanding balance thereof. In an application abandoned for failure to pay the publication fee, the required reply must include payment of the publication fee.

(2) the petition fee as set forth in 37 CFR 1.17(l);

(3) a showing to the satisfaction of the Commissioner that the entire delay in filing the required reply from the due date for the reply until the filing of a grantable petition pursuant to 37 CFR 1.137(a) was unavoidable; and

(4) any terminal disclaimer (and fee as set forth in 37 CFR 1.20(d)) required pursuant to 37 CFR 1.137(c)).

The petition lacks item (3).

With regards to item (3), the Director may revive an abandoned application if the delay in responding to the relevant outstanding Office requirement is shown to the satisfaction of the Director to be "unavoidable".[2] Decisions on reviving abandoned applications on the basis of "unavoidable" delay have adopted the reasonably prudent person standard in determining if the delay was unavoidable:

> The word 'unavoidable' . . . is applicable to ordinary human affairs, and requires no more or greater care or diligence than is generally used and observed by prudent and careful men in relation to their most important business. It permits them in the exercise of this care to rely upon the ordinary and trustworthy agencies of mail and telegraph, worthy and reliable employees, and such other means and instrumentalities as are usually employed in such important business. If unexpectedly, or through the unforeseen fault or imperfection of these agencies and instrumentalities, there occurs a failure, it may properly be said to be unavoidable, all other conditions of promptness in its rectification being present.[3]

The showing of record is inadequate to establish unavoidable delay within the meaning of 35 U.S.C. § 133 and 37 CFR 1.137(a).[5] Specifically, an application is "unavoidably" abandoned only where petitioner, or counsel for petitioner, takes all action necessary for a proper response to the outstanding Office action, but through the intervention of unforeseen circumstances, such as failure of mail, telegraph, facsimile, or the negligence of

---

[2] 35 U.S.C. § 133.

[3] In re Mattullath, 38 App. D.C. 497, 514-15 (1912)(quoting Ex parte Pratt, 1887 Dec. Comm'r Pat. 31, 32-33 (1887)); see also Winkler v. Ladd, 221 F. Supp. 550, 552, 138 USPQ 666, 167-68 (D.D.C. 1963), aff'd, 143 USPQ 172 (D.C. Cir. 1963); Ex parte Henrich, 1913 Dec. Comm'r Pat. 139, 141 (1913). In addition, decisions on revival are made on a "case-by-case basis, taking all the facts and circumstances into account." Smith v. Mossinghoff, 671 F.2d 533, 538, 213 USPQ 977, 982 (D.C. Cir. 1982). Finally, a petition cannot be granted where a petitioner has failed to meet his or her burden of establishing that the delay was "unavoidable." Haines v. Quigg, 673 F. Supp. 314, 316-17, 5 USPQ2d 1130, 1131-32 (N.D. Ind. 1987).

otherwise reliable employees, the response is not timely received in the Office.[4]

Petitioner's argument has been considered, but is not persuasive. Petitioner is responsible for the proper prosecution of his application. A delay resulting from the lack of knowledge or improper application of the patent statute, rules of practice or the MPEP does not constitute an "unavoidable" delay.[5] A delay caused by an applicant's lack of knowledge or improper application of the patent statute, rules of practice or the MPEP is not rendered "unavoidable" due to: (1) the applicant's reliance upon oral advice from Office employees; or (2) the Office's failure to advise the applicant of any deficiency in sufficient time to permit the applicant to take corrective action.[6]

Petitioner asserts unavoidable delay because the non-final Office action mailed on April 15, 2008 was never received. As stated above, petitioner's showing that non-final Office action mailed on April 15, 2008 was never received is lacking because the requirements set forth in MPEP 711.03(c) to establish that an Office communication was never received have not been met. Accordingly, the showing of record does not support a finding that the delay was unavoidable. The petition must therefore be dismissed.

However, such dismissal is without prejudice to reconsideration pending submission of the information requested above (*i.e.*, the statement by the practitioner and a master docket report) with any renewed petition.

Further correspondence with respect to this matter should be addressed as follows:

By mail: Mail Stop Petition
Commissioner for Patents
P.O. Box 1450
Alexandria, VA 22313-1450

---

[4] Ex parte Pratt, 1887 Dec. Comm'r Pat. 31 (Comm'r Pat. 1887).

[5] See Haines v. Quigg, 673 F. Supp. 314, 317, 5 USPQ2d 1130, 1132 (N.D. Ind. 1987), Vincent v, Mossinghoff, 230 USPQ 621, 624 (D.D.C. 1985); Smith v. Diamond, 209 USPQ 1091 (D.D.C. 1981); Potter v. Dann, 201 USPQ 574 (D.D.C. 1978); Ex parte Murray, 1891 Dec. Comm'r Pat. 130, 131 (1891).

[6] See In re Sivertz, 227 USPQ 255, 256 (Comm'r Pat. 1985); see also In re Colombo, Inc., 33 USPQ2d 1530, 1532 (Comm'r Pat. 1994)(while the Office attempts to notify applicants of deficiencies in their responses in a manner permitting a timely correction, the Office has no obligation to notify parties of deficiencies in their responses in a manner permitting a timely correction).

By FAX: (571) 273-8300
Attn: Office of Petitions

By hand: Customer Service Window
Mail Stop Petition
Randolph Building
401 Dulany Street
Alexandria, VA 22314

Telephone inquiries concerning this matter may be directed to the undersigned at (571) 272-3231.

Douglas I. Wood
Senior Petitions Attorney
Office of Petitions

UNITED STATES PATENT AND TRADEMARK OFFICE

Commissioner for Patents
United States Patent and Trademark Office
P.O. Box 1450
Alexandria, VA 22313-1450
www.uspto.gov
DIW Jun-09

SIEMENS CORPORATION
INTELLECTUAL PROPERTY DEPARTMENT
170 WOOD AVENUE SOUTH
ISELIN NJ 08830

COPY MAILED

JUN 1 1 2009

OFFICE OF PETITIONS

In re Application of	:	
Neuhaus et al.	:	DECISION ON PETITION
Application Number: 10/520681	:	
Filing Date: 01/07/2005	:	
Attorney Docket Number:	:	
2002P03767WOUS	:	

This is a decision on the renewed petition filed on April 24, 2009, under 37 CFR 1.137(a),[1] to revive the above-identified application. This is also a decision on the petition under 37 CFR 1.137(b) filed on April 24, 2009.

The petition under 37 CFR 1.137(a) is again **dismissed**.

The petition under 37 CFR 1.137(b) is **granted**.

The application became abandoned on July 16, 2008 for failure to timely file a response to the non-final Office action mailed on April 15, 2008, which set a three (3) month shortened statutory

---

[1] A grantable petition under 37 CFR 1.137(a) must be accompanied by:

(1) the required reply, unless previously filed; In a nonprovisional application abandoned for failure to prosecute, the required reply may be met by the filing of a continuing application. In a nonprovisional utility or plant application filed on or after June 8, 1995, and abandoned for failure to prosecute, the required reply may also be met by the filing of a request for continued examination in compliance with § 1.114. In an application or patent, abandoned or lapsed for failure to pay the issue fee or any portion thereof, the required reply must be the payment of the issue fee or any outstanding balance thereof. In an application abandoned for failure to pay the publication fee, the required reply must include payment of the publication fee.

(2) the petition fee as set forth in 37 CFR 1.17(l);

(3) a showing to the satisfaction of the Director that the entire delay in filing the required reply from the due date for the reply until the filing of a grantable petition pursuant to 37 CFR 1.137(a) was unavoidable; and

(4) any terminal disclaimer (and fee as set forth in 37 CFR 1.20(d)) required pursuant to 37 CFR 1.137(c)).

period for reply. Notice of Abandonment was mailed on January 22, 2009. The petition filed on January 30, 2009, was dismissed on February 24, 2009.

PETITION UNDER 37 CFR 1.137(a)

Petitioners again assert that the non-final Office action mailed on April 15, 2008, was never received. In support, a declaration was provided with the original petition by Tracey A. Daniel, counsel's Patent Assistant, stating that a search of the file jacket and docket record where the non-received Office communication would have been stored and entered was made and the search indicates that the Office communication was not received. The declaration states that a copy of the docket record where the non-received Office communication would have been entered had it been received and docketed, is attached hereto.

On January 30, 2009, the petition was dismissed without prejudice to reconsideration pending submission of a statement by the practitioner in accordance with MPEP 711.03(c). Specifically, MPEP 711.03(c) requires that the practitioner must state that the Office action was not received at the correspondence address of record, and that a search of the practitioner's record(s), including any file jacket or the equivalent, and the application contents, indicates that the Office action was not received. Additionally, the petition did not address whether or not the docket report provided was a master docket, pursuant to MPEP 711.03(c)

In the subject renewed petition, petitioners argue that the statement signed by counsel's paralegal as opposed to the practitioner "should be sufficient to meet the requirements of 37 CFR 1.137(a)."

Petitioner's argument has been carefully considered, but is not persuasive. At the outset, petitioners have not adequately explained why they are unable, or unwilling, to provide a statement signed by the practitioner as set forth in MPEP 711.03(c). In the absence of an adequate explanation, the failure to provide such a statement leads to a conclusion that the cause of the delay was not unavoidable.

While petitioner is correct that the determination of unavoidability is to be decided on a case by cases basis in accordance with Smith v. Mossinghoff, 671 F.2d 533, 538 (D.C. Cir. 1982) and Haines v. Quigg, 673 F. Supp. 314, 317 (N.D. Ind. 1987), decisions on reviving abandoned applications have adopted

the reasonably prudent person standard in determining if the delay was unavoidable.[2] However, a petition to revive an application as unavoidably abandoned cannot be granted where a petitioner has failed to meet his or her burden of establishing the cause of the unavoidable delay.[3] Simply put, the burden is on the petitioner, rather than on the Office, to show that the delay is unavoidable.

Thus, in the absence of a statement by the practitioner in accordance with MPEP 711.03(c), or a sufficient explanation as to why such statement cannot be provided, the Office is unable to conclude that the delay was, in fact, unavoidable. Accordingly the petition under 37 CFR 1.137(a) is again dismissed.

PETITION UNDER 37 CFR 1.137(B)

The statement contained in the instant petition does not set forth that the entire delay from the due date of the required reply to the date of the filing of a grantable petition was unintentional as required by 37 CFR 1.137(b)(3). However, the statement contained in the instant petition is being so construed. Petitioner **must** notify the Office if this is not a correct interpretation.

It is noted that petitioner has requested that only the difference in fees between the petitions under 37 CFR 1.137(a) and (b) be charged.

In this regard, MPEP 711.03(c) states that:

> 35 U.S.C. 41(a) (7) provides that a petition for the revival of an unintentionally abandoned application or for the unintentionally delayed payment of the issue fee must be accompanied by the petition fee set forth in 37 CFR 1.17(m), unless the petition is filed under 35 U.S.C. 133 or 151 (on the basis of unavoidable delay), in which case the fee is set forth in 37 CFR 1.17(l). Thus, unless the circumstances warrant the withdrawal of the holding of abandonment (i.e., it is determined that the application is not properly held abandoned), the payment of a petition fee to obtain the

---

[2] Ex parte Pratt, 1887 Dec. Comm'r Pat. 31, 32-33 (Comm'r Pat. 1887)(the term "unavoidable" "is applicable to ordinary human affairs, and requires no more or greater care or diligence than is generally used and observed by prudent and careful men in relation to their most important business"); In re Mattullath, 38 App. D.C. 497, 514-15 (D.C. Cir. 1912); Ex parte Henrich, 1913 Dec. Comm'r Pat. 139, 141 (Comm'r Pat. 1913).

[3] Haines v. Quigg, 673 F. Supp. 314, 5 USPQ2d 1130 (N.D. Ind. 1987).

> revival of an abandoned application is a statutory prerequisite to revival of the abandoned application, and cannot be waived.
>
> In addition, the phrase "[o]n filing" in 35 U.S.C. 41(a)(7) means that the petition fee is required for the filing (and not merely the grant) of a petition under 37 CFR 1.137. See H.R. Rep. No. 542, 97th Cong., 2d Sess. 6 (1982), reprinted in 1982 U.S.C.C.A.N. 770 ("[t]he fees set forth in this section are due on filing the petition"). Therefore, the Office: (A) will not refund the petition fee required by 37 CFR 1.17(l) or 1.17(m), regardless of whether the petition under 37 CFR 1.137 is dismissed or denied; and (B) will not reach the merits of any petition under 37 CFR 1.137 lacking the requisite petition fee.

Thus, the entire petition fee under 37 CFR 1.137(b) must be paid to obtain consideration under 37 CFR 1.137(b). As petitioner has authorized "the difference in the petition fees and any other required fees" to be charged, the entire petition fee under 37 CFR 1.137(b) will be charged as required to obtain consideration under 37 CFR 1.137(b).

Receipt of the amendment filed on January 30, 2009 in response to the non-final Office action mailed on April 15, 2008 is acknowledged.

The application will be forwarded to Technology Center Art Unit 2456 for further processing.

Telephone inquiries concerning this matter may be directed to the undersigned at (571) 272-3231.

D Wood

Douglas I. Wood
Senior Petitions Attorney
Office of Petitions

12 APR 2006

#6

UNITED STATES PATENT AND TRADEMARK OFFICE

Commissioner for Patents
United States Patent and Trademark Office
P.O. Box 1450
Alexandria, VA 22313-1450
www.uspto.gov

20792
MYERS BIGEL SIBLEY & SAJOVEC
P.O. Box 37428
Raleigh, NC 27627

In re Application of
PERICAK-VANCE *et al*
U.S. Application No.: 10/520,695
PCT No.: PCT/US03/21963
Int. Filing Date: 11 July 2003
Priority Date: 12 July 2003
Attorney's Docket No.: 5405.264
For: GENETIC SUSCEPTIBILITY GENES FOR ASTHMA AND ATOPY AND ASTHMA-RELATED AND ATOPIC-RELATED PHENOTYPES

DECISION

This is a decision on the request to add two inventors and delete one inventor in the above-captioned application filed 14 November 2005. This is treated under 37 CFR 1.497(d).

BACKGROUND

On 12 July 2005, the DO/EO/US mailed a Notification of Missing Requirements Under 35 U.S.C. 371 (Form PCT/DO/EO/905) indicating that an oath or declaration in compliance with 37 CFR 1.497(a) and (b) was required. Applicants were given two months to respond with extensions of time available.

On 14 November 2005, applicant filed a response which was accompanied by, *inter alia*, a request to add and delete named inventors; a two-month extension request and fee; a surcharge fee; the processing fee; an executed declaration listing four inventors; statements from two inventors being added and one inventor being deleted; a consent of assignee statement; and authorization to charge any additional fees to Deposit Account No. 50-0220.

DISCUSSION

Applicants request to add Marcy C. Speer and Michael A. Hauser and remove Jonathan L. Haines as inventors in the above-captioned application. 37 CFR 1.497(d) applies when the inventorship in a national stage application filed under 35 U.S.C. 371 differs from that set forth in the international application (see 37 CFR 1.48(f)(1)). 37 CFR 1.497(d) states, in part:

(d) If the oath or declaration filed pursuant to 35 U.S.C. 371(c)(4) and this section names an inventive entity different from the inventive entity set forth in the international application, the oath or declaration must be accompanied by:

(1) A statement from each person being added as an inventor and from each person being deleted as an inventor that any error in inventorship in the international application occurred without deceptive intention on his or her part;

(2) The processing fee set forth in § 1.17(l); and

(3) If an assignment has been executed by any of the original named inventors, the written consent of the assignees.

Applicants provided the requisite statements from the two inventors being added and one inventor being deleted that the error in inventorship was "inadvertent and occurred without any deceptive intent" on their part. The processing fee of $130.00 was paid. Items (1) and (2) above, are satisfied.

Applicants also provided a consent of the assignee statement signed by Robert L. Tabor as Vice Chancellor of Duke University. The position of Vice Chancellor is an officer of the university and is presumed to have the apparent authority to sign on its behalf. *See* MPEP § 324.

However, applicants have not established that Duke University is the assignee of the subject application. Specifically, applicants did not provide a copy of the recorded assignment or state the location of the assignment, *e.g.* reel and frame number. *See* 37 CFR 3.73(b)(1). For this reason, item (3) is not yet satisfied.

Therefore, all the requirements of 37 CFR 1.497(d) are not complete.

CONCLUSION

For the reason discussed above, applicants' request under 37 CFR 1.497(d) is **DISMISSED** without prejudice.

If reconsideration on the merits of this petition is desired, a proper response must be filed within **TWO (2) MONTHS** from the mail date of this decision. Extensions of time may be obtained under 37 CFR 1.136(a).

Any further correspondence with respect to this matter deposited with the United States Postal Service should be addressed to the Mail Stop PCT, Commissioner for Patents, Office of PCT Legal Administration, P.O. Box 1450, Alexandria, Virginia

22313-1450, with the contents of the letter marked to the attention of the Office of PCT Legal Administration.

James Thomson

James Thomson
Attorney Advisor
Office of PCT Legal Administration

Tel.: (571) 272-3302

UNITED STATES PATENT AND TRADEMARK OFFICE

Commissioner for Patents
United States Patent and Trademark Office
P.O. Box 1450
Alexandria, VA 22313-1450
www.uspto.gov

24 MAY 2006

20792
MYERS BIGEL SIBLEY & SAJOVEC
P.O. Box 37428
Raleigh, NC 27627

In re Application of
PERICAK-VANCE *et al*
U.S. Application No.: 10/520,695
PCT No.: PCT/US03/21963
Int. Filing Date: 11 July 2003
Priority Date: 12 July 2003
Attorney's Docket No.: 5405.264
For: GENETIC SUSCEPTIBILITY GENES FOR ASTHMA AND ATOPY AND ASTHMA-RELATED AND ATOPIC-RELATED PHENOTYPES

DECISION

This is a decision on applicants' "Response to Decision Regarding Request to Correct Inventorship" filed on 18 May 2006.

BACKGROUND

On 12 April 2006, a decision dismissing applicants' petition under 37 CFR 1.497(d) was mailed. Applicants were given two months to respond with extensions of time available.

On 18 May 2006, applicants filed the renewed petition along with a copy of an assignment.

DISCUSSION

As previously indicated, 37 CFR 1.497(d) applies when the inventorship in a national stage application filed under 35 U.S.C. 371 differs from that set forth in the international application (see 37 CFR 1.48(f)(1)). 37 CFR 1.497(d) states, in part:

> (d) If the oath or declaration filed pursuant to 35 U.S.C. 371(c)(4) and this section names an inventive entity different from the inventive entity set forth in the international application, or a change to the inventive entity has been effected under PCT Rule 92 bis subsequent to the execution of any declaration which was filed under PCT Rule 4.17(iv), the oath or declaration must be accompanied by:
>
> (1) A statement from each person being added as an inventor

and from each person being deleted as an inventor that any error in inventorship in the international application occurred without deceptive intention on his or her part;

(2) The processing fee set forth in § 1.17(i); and

(3) If an assignment has been executed by any of the original named inventors, the written consent of the assignee (see § 3.73(b) of this chapter).

Applicants previously completed items (1) and (2) of 37 CFR 1.497(d). Applicants also provided a consent form signed by a representative of Duke University. However, applicants failed to establish that Duke University is the assignee of the subject application.

In the renewed petition, applicants have cured this defect. Applicants submitted a copy of the Notice of Recordation of Assignment Document for the subject application identifying the reel and frame number of the assignment and showing that the assignee is Duke University. This is sufficient to satisfy all the requirements of item (3) of 37 CFR 1.497(d). All items of 37 CFR 1.497(d) are now complete.

CONCLUSION

Applicants' request to add Marcy C. Speer and Michael A. Hauser and remove Jonathan L. Haines as inventors in the above-captioned application pursuant to 37 CFR 1.497(d) is **GRANTED**.

The declaration filed 14 November 2005 is in compliance with 37 CFR 1.497(a) and (b). Applicants have completed the requirements for acceptance under 35 U.S.C. 371(c). The application has an international filing date of 11 July 2003, under 35 U.S.C. 363 and a 35 U.S.C. 371(c)(1), (c)(2) and (c)(4) date of 14 November 2005.

This application is being forwarded to the National Stage Processing Division of the Office of PCT Operations for continued processing.

James Thomson

James Thomson
Attorney Advisor
Office of PCT Legal Administration

Tel.: (571) 272-3302

UNITED STATES PATENT AND TRADEMARK OFFICE

Commissioner for Patents
United States Patent and Trademark Office
P.O. Box 1450
Alexandria, VA 22313-1450
www.uspto.gov

MAILED

JUN 0 9 2009

OFFICE OF PETITIONS

FISH & RICHARDSON P.C.
P.O BOX 1022
MINNEAPOLIS MN 55440-1022

In re Patent No. 7,449,475	:	
Hossain et al.	:	
Issue Date: November 11, 2008	:	DECISION ON APPLICATION
Application No. 10/520,699	:	FOR
Filed: January 7, 2005	:	PATENT TERM ADJUSTMENT
Attorney Docket No. 06275-427US1/	:	
100684-1P US	:	

This is in response to the "APPLICATION FOR PATENT TERM ADJUSTMENT UNDER 37 CFR 1.705(d)," filed December 19, 2008, requesting that the patent term adjustment determination for the above-identified patent be changed from one hundred thirty-one(131) days to one hundred eighty(180) days. For the reasons set forth herein, the request for reconsideration is being treated as a request that the revised patent term adjustment be corrected from one hundred thirty-one(131)days to one hundred seventy-nine(179) days.

The request for reconsideration is granted to the extent that the determination has been reconsidered; however, the request for reconsideration of patent term adjustment is **DISMISSED** with respect to making any change in the patent adjustment determination under 35 U.S.C. § 154(b) of 131 days.

On November 11, 2008, the above-identified application matured into U.S. Patent No. 7,449,475 with a patent term adjustment of 131 days.

This request for reconsideration of patent term adjustment was timely filed within two months of the issue date of the patent. See 1.705(d).

The Office acknowledges submission of the $200.00 fee set forth in 37 CFR 1.18(e). No additional fees are required.

Patentees request recalculation of the patent term adjustment based on the decision in Wyeth v. Dudas, 580 F. Supp. 2d 138, 88 U.S.P.Q. 2d 1538 (D.D.C. 2008). Patentees assert that pursuant to Wyeth, a PTO delay under §154(b)(1)(A) overlaps with a delay under §154(b)(1)(B) only if the delays "occur on the same day." Patentees maintain that the period of adjustment due to the Three Year Delay by the Office, pursuant to 37 CFR § 1.703(b), of 49 days and the period of adjustment due to examination delay, pursuant to 37 CFR §1.702(a), of 307 days do not overlap as these periods do not occur on the same day.

Patentees argue that the period of adjustment due to the Three Year Delay by the Office, pursuant to 37 CFR § 1.702(b), is 49 days. Patentees calculate this 49 day period as beginning on the date that is three years after the commencement of the national stage, January 8, 2008, and ending on February 25, 2008, when the first RCE was filed.

Patentees are informed that their calculation of the Three Year Delay period is incorrect.

The commencement date is 30 months from the priority date claimed in the international application, or earlier. The priority date claimed in the international application is July 8, 2002. Thirty months from that date is January 8, 2005 The period of adjustment under §1.702(b)is the number of days, if any, in the period beginning on the day after the date that is three years after the date on which the national stage commenced and ending on the date a patent was issued, but not including the period beginning on the date on which a RCE was filed and ending on the date the patent was issued. Accordingly, the period of adjustment under § 1.702(b) is 48 days, counting the number of days beginning on January 9, 2008 and ending on February 25, 2008 when the first RCE was filed.

Patentees assert that in addition to the three year delay period, they are entitled to a period of adjustment due to examination delay, pursuant to 37 CFR §1.702(a)(1), of 307 days for the failure by the Office to mail at least one of a notification under 35 U.S.C. 132 not later than fourteen months after the date the application fulfilled the requirements of 35 U.S.C. 371 in an international application.

Under 37 CFR § 1.703(f), patentees are entitled to a period of patent term adjustment equal to the period of delays based on

the grounds set forth in 37 CFR §1.702 reduced by the period of time equal to the period of time during which patentees failed to engage in reasonable efforts to conclude prosecution pursuant to 37 CFR §1.704. In other words, the period of Office delay reduced by the period of applicant delay. The period of reduction of 176 days for applicant delay is not in dispute. Patentees assert that the total period of Office delay is the sum of the period of Three Years Delay (49 days per patentees' calculation) and the period of Examination Delay (307 days, not in dispute) **to the extent that these periods of delay are not overlapping.**

Patentees contend that no portion of the period of 14 month examination delay of 307 days (March 9, 2006 to January 8, 2007) overlaps with the Three Year Delay period (January 9, 2008 to February 25, 2008). Accordingly, patentees submit that the total period of Office Delay is 356 days, which is the sum of the period of Three Year Delay (49 days) and the period of Examination Delay (307 days), reduced by the period of overlap (0 days).

As such, patentees assert entitlement to a patent term adjustment of 180 days (49 per patentees' calculation +307 reduced by 0 overlap -176 for applicant delay). Considering that the three-year period is properly calculated as 48 days, not 49 days, patentees assertion of entitlement to a patent term adjustment is considered to be 179 days (48+ 307 reduced by 0 overlap - 176 for applicant delay).

As discussed above, the Office states that the patent was pending 3 years and 48 days after the application's commencement date, with the February 25, 2008 RCE ending calculation of the three year period. The Office agrees that the action detailed above was not taken within the specified time frame, and thus, the entry of period of adjustment of 307 days is correct. At issue is whether patentees should accrue 48 (per Office's calculation of the Three Year Delay Period) days of patent term adjustment for the Office taking in excess of three years to issue the patent, as well as, 307 days for Office failure to take a certain action within a specified time frame (or examination delay).

The Office contends that all 48 days overlap. Patentees' interpretation of the period of overlap has been considered and found to be incorrect. Patentees' calculation of the period of

overlap is inconsistent with the Office's interpretation of this provision. 35 U.S.C. 154(b)(2)(A) limits the adjustment of patent term, as follows:

> to the extent that the periods of delay attributable to grounds specified in paragraph (1) overlap, the period of any adjustment granted under this subsection shall not exceed the actual number of days the issuance of the patent was delayed.

Likewise, 37 CFR 1.703(f) provides that:

> To the extent that periods of delay attributable to the grounds specified in §1.702 overlap, the period of adjustment granted under this section shall not exceed the actual number of days the issuance of the patent was delayed.

As explained in *Explanation of 37 CFR 1.703(f) and of the United States Patent and Trademark Office Interpretation of 35 U.S.C. 154(b)(2)(A)*, 69 Fed. Reg. 34283 (June 21, 2004), the Office interprets 35 U.S.C. 154(b)(2)(A) as permitting either patent term adjustment under 35 U.S.C. 154(b)(1)(A)(i)-(iv), or patent term adjustment under 35 U.S.C. 154(b)(1)(B), but not as permitting patent term adjustment under both 35 U.S.C. 154(b)(1)(A)(i)-(iv) and 154(b)(1)(B). Accordingly, the Office implements the overlap provision as follows:

> If an application is entitled to an adjustment under 35 U.S.C. 154(b)(1)(B), the entire period during which the application was pending (except for periods excluded under 35 U.S.C. 154(b)(1)(B)(i)-(iii)), and not just the period beginning three years after the actual filing date of the application, is the period of delay under 35 U.S.C. 154(b)(1)(B) in determining whether periods of delay overlap under 35 U.S.C. 154(b)(2)(A). Thus, any days of delay for Office issuance of the patent more than 3 years after the filing date of the application, which overlap with the days of patent term adjustment accorded prior to the issuance of the patent will not result in any additional patent term adjustment. See 35 U.S.C. 154(b)(1)(B), 35 U.S.C. 154(b)(2)(A), and 37 CFR § 1.703(f). See *Changes to Implement Patent Term Adjustment Under Twenty Year Term; Final Rule*, 65 Fed. Reg. 54366 (Sept. 18, 2000). See also *Revision of Patent Term*

> *Extension and Patent Term Adjustment Provisions; Final Rule*, 69 Fed. Reg. 21704 (April 22, 2004), 1282 Off. Gaz. Pat. Office 100 (May 18, 2004). See also *Explanation of 37 CFR 1.703(f) and of the United States Patent and Trademark Office Interpretation of 35 U.S.C. 154(b)(2)(A)*, 69 Fed. Reg. 34283 (June 21, 2004).

The current wording of § 1.703(f) was revised in response to the misinterpretation of this provision by a number of Patentees. The rule was slightly revised to more closely track the corresponding language of 35 U.S.C. 154(b)(2)(A). The relevant portion differs only to the extent that the statute refers back to provisions of the statute whereas the rule refers back to sections of the rule. This was not a substantive change to the rule nor did it reflect a change of the Office's interpretation of 35 U.S.C. 154(b)(2)(A). As stated in the *Explanation of 37 CFR 1.703(f) and of the United States Patent and Trademark Office Interpretation of 35 U.S.C. 154(b)(2)(A)*, the Office has consistently taken the position that if an application is entitled to an adjustment under the three-year pendency provision of 35 U.S.C. 154(b)(1)(B), the entire period during which the application was pending before the Office (except for periods excluded under 35 U.S.C. 154(b)(1)(B)(i)-(iii)), and not just the period beginning three years after the actual filing date of the application, is the relevant period under 35 U.S.C. 154(b)(1)(B) in determining whether periods of delay "overlap" under 35 U.S.C. 154(b)(2)(A).

This interpretation is consistent with the statute. Taken together the statute and rule provide that to the extent that periods of delay attributable to grounds specified in 35 U.S.C. 154(b)(1) and in corresponding §1.702 overlap, the period of adjustment granted shall not exceed the actual number of days the issuance of the patent was delayed. The grounds specified in these sections cover the A) guarantee of prompt Patent and Trademark Office responses, B) guarantee of no more than 3 year application pendency, and C) guarantee or adjustments for delays due to interference, secrecy orders and appeals. A section by section analysis of 35 U.S.C. 154(b)(2)(A) specifically provides that:

> Section 4402 imposes limitations on restoration of term. In general, pursuant to [35 U.S.C.] 154(b)(2)(A)-(C), total adjustments granted for restorations under [35 U.S.C. 154](b)(1) are reduced as follows: (1) To the extent that

> there are multiple grounds for extending the term of a patent that may exist simultaneously (e.g., delay due to a secrecy order under [35 U.S.C.] 181 and administrative delay under [35 U.S.C.] 154(b)(1)(A)), the term should not be extended for each ground of delay but only for the actual number of days that the issuance of a patent was delayed; See 145 Cong. Rec. S14,718[1]

As such, the period for over 3 year pendency does not overlap only to the extent that the actual dates in the period beginning three years after the commencement date overlap with the actual dates in the periods for failure of the Office to take action within specified time frames. In other words, consideration of the overlap does not begin three years after the commencement date of the application.

In this instance, the relevant period under 35 U.S.C. 154(b)(1)(B) in determining whether periods of delay "overlap" under 35 U.S.C. 154(b)(2)(A) is the entire period from the application's commencement date through the date the first request for continued examination (RCE) was filed, February 25, 2008.

307 days of patent term adjustment were accorded prior to the issuance of the patent for the Office failing to respond within a specified time frame during the pendency of the application. The 48 days for Office delay in issuing the patent overlap with the 307 days accorded prior to issuance. Accordingly, at issuance, the Office properly entered no additional days of patent term adjustment for the Office taking in excess of 3 years to issue the patent.

In view thereof, the Office affirms that the correct determination of patent term adjustment at the time of the issuance of the patent is 131 days.

---

[1] The AIPA is title IV of the Intellectual Property and Communications Omnibus Reform Act of 1999 (S. 1948), which was incorporated and enacted as law as part of Pub. L. 106-113. The Conference Report for H.R. 3194, 106th Cong. 1st Sess. (1999), which resulted in Pub. L. 106-113, does not contain any discussion (other than the incorporated language) of S. 1948. A section-by-section analysis of S. 1948, however, was printed in the Congressional Record at the request of Senator Lott, See 145 Cong. Rec. S14,708-26 (1999)(daily ed. Nov. 17, 1999).

Telephone inquiries specific to this matter should be directed to Shirene Willis Brantley, Senior Petitions Attorney, at (571) 272-3230.

Nancy Johnson
Senior Petitions Attorney
Office of the Deputy Commissioner
for Patent Examination Policy

UNITED STATES PATENT AND TRADEMARK OFFICE

Commissioner for Patents
United States Patent and Trademark Office
P.O. Box 1450
Alexandria, VA 22313-1450
www.uspto.gov

DICKINSON WRIGHT, PLLC
1875 EYE STREET, NW
SUITE 1200
WASHINGTON, DC 20006

MAILED

NOV 19 2009

OFFICE OF PETITIONS

In re Application of :
Josef Schwagmann :
Application No. 10/520,716 : ON PETITION
Filed: June 6, 2005 :
Attorney Docket No. 2002P10577WOUS :

This is a decision on the petition, filed April 13, 2009, which is being treated as a petition under 37 CFR 1.181 (no fee) requesting withdrawal of the holding of abandonment in the above-identified application.

The petition is **DISMISSED**.

Any request for reconsideration of this decision should be submitted within two (2) months from the mail date of this decision and be entitled "Renewed Petition to Withdraw the Holding of Abandonment under 37 CFR 1.181." *See* 37 CFR 1.181(f).

The application became abandoned for failure to timely file a reply within the meaning of 37 CFR 1.113 to the final Office action of March 11, 2008. The proposed reply required for consideration of a petition to revive must be a Notice of Appeal (and appeal fee required by 37 CFR 41.20(b)(2)), an amendment that *prima facie* places the application in condition for allowance, a Request for Continued Examination (RCE) and submission (37 CFR 1.114), or the filing of a continuing application under 37 CFR 1.53(b). *See* MPEP 711.03(c)(III)(A)(2).

In the present petition, petitioner requests that the Office withdraw the holding of abandonment. Specifically, petitioner states "The basis for the petition is that the time limit for responding to the outstanding office action has not expired, and a timely response is being filed concurrently herewith. A Notice of Appeal and a Petition for a Three Month Extension of Time was filed on September 11, 2008."

The final Office action mailed March 11, 2008 set a shortened statutory period for reply of three (3) months. Three month extension of time under the provisions of 37 CFR 1.136(a) was obtained. Accordingly, the above-identified application became abandoned on September 12, 2008.

The Office record show a response was received on September 11, 2008. However, this response was not entered. A courtesy copy of the September 22, 2008 advisory action accompanies this decision for petitioner's convenience.

ALTERNATIVE VENUE

Petitioner is strongly encouraged to consider filing a petition under 37 CFR 1.137(b) to revive an unintentionally abandoned application instead of filing a renewed petition under 37 CFR 1.181 or a petition under 37 CFR 1.137(a).

A grantable petition pursuant to 37 CFR 1.137(b) must be accompanied by:

> (1) The reply required to the outstanding Office action or notice, unless previously filed. In nonprovisional utility application abandoned for failure to respond to a non-final Office action, the required reply may be met by filing either (A) an argument or amendment under 37 CFR 1.111 or (B) a continuing application under 37 CFR 1.53(b).
>
> (2) The petition fee as set forth in 37 CFR 1.17(m), **$1620.00 for a small entity**;
>
> (3) A statement that the entire delay in filing the required reply from the due date for the reply until the filing of a grantable petition was unintentional. The Director may require additional information where there is a question whether the delay was unintentional.

A form for filing a petition to revive an unintentionally abandoned application accompanies this decision for petitioner's convenience. If petitioner desires to file a petition under 37 CFR 1.137(b) instead of filing a request for reconsideration, petitioner must complete the enclosed petition form (PTO/SB/64) and pay the $1620.00 petition fee.

An extension of time under 37 CFR 1.136 must be filed prior to the expiration of the maximum extendable period for reply. See In re Application of S., 8 USPQ2d 1630, 1631 (Comm'r Pats. 1988). Accordingly, since the $2350 extension of time submitted with the petition on April 13, 2009 was subsequent to the maximum extendable period for reply, this fee is unnecessary. Petitioner may apply $1620 toward the petition fee and credit $730 to petitioner's deposit account.

Further correspondence with respect to this matter should be addressed as follows:

By mail: Mail Stop Petition
Commissioner for Patents
P.O. Box 1450
Alexandria, VA 22313-1450

By FAX: (571) 273-8300
Attn: Office of Petitions

By hand: Customer Service Window
Randolph Building
401 Dulany Street
Alexandria, VA 22314

Telephone inquiries related to this decision may be directed to the undersigned at (571) 272-3210.

Irvin Dingle
Petitions Examiner
Office of Petitions

Enclosures: Petition For Revival Of An Application For Patent Abandoned Unintentionally Under 37 CFR 1.137(b); Form PTO/SB/64, Privacy Act Statement; and a courtesy copy of the September 22, 2008 advisory action.

UNITED STATES PATENT AND TRADEMARK OFFICE

UNITED STATES DEPARTMENT OF COMMERCE
United States Patent and Trademark Office
Address: COMMISSIONER FOR PATENTS
P.O. Box 1450
Alexandria, Virginia 22313-1450
www.uspto.gov

APPLICATION NO.	FILING DATE	FIRST NAMED INVENTOR	ATTORNEY DOCKET NO.	CONFIRMATION NO.
10/520,716	06/06/2005	Josef Schwagmann	2002P10577WOUS	2595

29177 7590 09/22/2008
BELL, BOYD & LLOYD, LLP
P.O. BOX 1135
CHICAGO, IL 60690

EXAMINER
KIM, TAE K

ART UNIT	PAPER NUMBER
2153	

MAIL DATE	DELIVERY MODE
09/22/2008	PAPER

Please find below and/or attached an Office communication concerning this application or proceeding.

The time period for reply, if any, is set in the attached communication.

Advisory Action After the Filing of an Appeal Brief	Application No. 10/520,716	Applicant(s) SCHWAGMANN, JOSEF	
	Examiner TAE K. KIM	Art Unit 2153	

--The MAILING DATE of this communication appears on the cover sheet with the correspondence address --

The reply filed 11 September 2008 is acknowledged.

1. ☒ The reply filed on or after the date of filing of an appeal brief, but prior to a final decision by the Board of Patent Appeals and Interferences, will not be entered because:

   a. ☒ The amendment is not limited to canceling claims (where the cancellation does not affect the scope of any other pending claims) or rewriting dependent claims into independent form (no limitation of a dependent claim can be excluded in rewriting that claim). See 37 CFR 41.33(b) and (c).

   b. ☐ The affidavit or other evidence is not timely filed before the filing of an appeal brief. See 37 CFR 41.33(d)(2).

2. ☐ The reply is not entered because it was not filed within the two month time period set forth in 37 CFR 41.39(b), 41.50(a)(2), or 41.50(b) (whichever is appropriate). Extensions of time under 37 CFR 1.136(a) are not available.

   Note: This paragraph is for a reply filed in response to one of the following: (a) an examiner's answer that includes a new ground of rejection (37 CFR 41.39(a)(2)); (b) a supplemental examiner's answer written in response to a remand by the Board of Patent Appeals and Interferences for further consideration of rejection (37 CFR 41.50(a)(2)); or (c) a Board of Patent Appeals and Interferences decision that includes a new ground of rejection (37 CFR 41.50(b)).

3. ☐ The reply is entered. An explanation of the status of the claims after entry is below or attached.

4. ☒ Other: *Applicant is attempting to amend the claims to include "quality of serivce" as monitored data within the system. Quality of service is a term known in the art that is related to packet loss within the trasmission of information, which is a narrower limitation that falls within the broader limitation of "service quality." The Applicant clearly notes this distinction in the remarks beginning at the third paragraph of Pg. 8. The Applicant further states that this amendment "clearly distinguishes over the 'job performance' used for SLAs as described" in the prior art. Therefore, the scope of the claims have changed due to the amendment and thus, not entered.*

/Glenton B. Burgess/
Supervisory Patent Examiner, Art Unit 2153

UNITED STATES PATENT AND TRADEMARK OFFICE

Commissioner for Patents
United States Patent and Trademark Office
P.O. Box 1450
Alexandria, VA 22313-1450
www.uspto.gov

DICKINSON WRIGHT, PLLC
1875 EYE STREET, NW, SUITE 1200
WASHINGTON, DC 20006

COPY MAILED
DEC 08 2009
OFFICE OF PETITIONS

In re Application of	:	
Josef Schwagmann	:	
Application No. 10/520,716	:	DECISION ON PETITION
Filed: June 6, 2005	:	
Attorney Docket No. 2002P10577WOUS	:	

CORRECTED DECISION

This is a decision on the petition, filed April 13, 2009, which is being treated as a petition under 37 CFR 1.8(b), requesting withdrawal of the holding of abandonment in the above-identified application.

The petition is **GRANTED**.

This application was held abandoned as a result of petitioner's failure to file an appeal brief (and fee required by 37 CFR 41.20(b)(2)) within the two (2) month time period provided in 37 CFR 41.37(a)(1). The Notice of Appeal was filed on September 11, 2009.

Office record show a timely reply was received under 37 CFR 1.8 on April 13, 2009, which included the following papers: Request for Continued Examination (RCE); five (5) month extension of time; Statement under 37 CFR 3.73(b) and power of attorney.

The petition satisfies the above requirements of 37 CFR 1.8(b). Accordingly, the holding of abandonment is hereby withdrawn and the application restored to pending status.

The decision mailed November 18, 2009 is hereby vacated as of the mail date of this decision.

This application is being referred to Technology Center AU 2453 for appropriate action in the normal course of business on the RCE received on April 13, 2009.

/Irvin Dingle/
Irvin Dingle
Petitions Examiner
Office of Petitions

UNITED STATES PATENT AND TRADEMARK OFFICE

Commissioner for Patents
United States Patent and Trademark Office
P.O. Box 1450
Alexandria, VA 22313-1450
www.uspto.gov

DICKINSON WRIGHT, PLLC
1875 EYE STREET, NW
SUITE 1200
WASHINGTON, DC 20006

MAILED

JUL 08 2010

OFFICE OF PETITIONS

In re Application of
Josef Schwagmann
Application No. 10/520,716
Filed: June 6, 2005
Attorney Docket No. 2002P10577WOUS

DECISION ON PETITION
TO WITHDRAW
FROM RECORD

This is a decision on the Request to Withdraw as attorney or agent of record under 37 C.F.R. § 1.36(b), filed May 27, 2010.

The request is **APPROVED**.

A grantable request to withdraw as attorney/agent of record must be signed by every attorney/agent seeking to withdraw or contain a clear indication that one attorney is signing on behalf of another/others.

The request was signed by Kevin R. Spivak on behalf of all attorneys of record who are associated with customer No. 87133All attorneys/agents associated with the Customer Number 87133 have been withdrawn. Applicant is reminded that there is no attorney of record at this time.

The correspondence address of record has been changed and the new correspondence address is the address indicated below.

There is an outstanding Office action mailed January 5, 2010 that requires a reply from the applicant.

Telephone inquiries concerning this decision should be directed to undersigned at 571-272-1642. All other inquiries concerning the examination or status of this application should be directed to the Technology Center.

/AMW/
April M. Wise
Petitions Examiner
Office of Petitions

cc: NOKIA SIEMENS NETWORK GMBH & CO. KG
CTO RTP IPR/PATENT ADMINISTRATION
MUNICH 80240 GERMANY

UNITED STATES PATENT AND TRADEMARK OFFICE

UNITED STATES DEPARTMENT OF COMMERCE
United States Patent and Trademark Office
Address: COMMISSIONER FOR PATENTS
P.O. Box 1450
Alexandria, Virginia 22313-1450
www.uspto.gov

APPLICATION NUMBER	FILING OR 371(C) DATE	FIRST NAMED APPLICANT	ATTY. DOCKET NO./TITLE
10/520,716	06/06/2005	Josef Schwagmann	2002P10577WOUS

CONFIRMATION NO. 2595

POWER OF ATTORNEY NOTICE

87133
Dickinson Wright, PLLC
1875 Eye Street, NW
Suite 1200
Washington, DC 20006

OC000000042425312

Date Mailed: 07/06/2010

NOTICE REGARDING CHANGE OF POWER OF ATTORNEY

This is in response to the Power of Attorney filed 05/27/2010.

- The withdrawal as attorney in this application has been accepted. Future correspondence will be mailed to the new address of record. 37 CFR 1.33.

/amwise/

Office of Data Management, Application Assistance Unit (571) 272-4000, or (571) 272-4200, or 1-888-786-0101

UNITED STATES PATENT AND TRADEMARK OFFICE

UNITED STATES DEPARTMENT OF COMMERCE
United States Patent and Trademark Office
Address: COMMISSIONER FOR PATENTS
P.O. Box 1450
Alexandria, Virginia 22313-1450
www.uspto.gov

APPLICATION NO.	FILING DATE	FIRST NAMED INVENTOR	ATTORNEY DOCKET NO.	CONFIRMATION NO.
10/520,726	02/17/2006	Yatendra Kumar	RLL-261US2	9367

7590 02/12/2008
RANBAXY INC.
600 COLLEGE ROAD EAST
SUITE 2100
PRINCETON, NJ 08540

EXAMINER
SAEED, KAMAL A

ART UNIT	PAPER NUMBER
1626	

MAIL DATE	DELIVERY MODE
02/12/2008	PAPER

DECISION DISMISSING PETITION UNDER 37 CFR 1.138(d)

The declaration of express abandonment will not be recognized

This is in response to the petition under 37 CFR 1.138(d), requesting for a refund of any previously paid search fee and excess claims fee in the above-identified application.

The petition is dismissed.

The express abandonment will **not** be recognized for the reason(s) indicated below:

1. ☐ The petition was not filed in sufficient time to permit the appropriate officials to recognize the abandonment before an examination has been made of the application. See 37 CFR 1.138(d).
2. ☐ The petition was not signed by a party authorized by 37 CFR 1.33(b)(1), (3) or (4).
3. ☒ The application is not an application filed under 35 U.S.C. 111(a) on or after December 8, 2004.
4. ☐ The petition for express abandonment under 1.138(d) is dismissed because the applicant did not pay any search fee and excess claims fees in the above-identified application.

Telephone inquiries should be directed to the Office of Data Management at (571) 272-4200.

Tammy J. Kenton

Patent Publication Branch
Office of Data Management

FORM PET651D (Rev. 08/07)

#4

UNITED STATES PATENT AND TRADEMARK OFFICE

Commissioner for Patents
United States Patent and Trademark Office
P.O. Box 1450
Alexandria, VA 22313-1450
www.uspto.gov

02 FEB 2006

SCHIFF HARDIN, LLP
PATENT DEPARTMENT
6600 SEARS TOWER
CHICAGO, IL 60606-6473

In re Application of STRANDBERG et al. Application No.: 10/520,753 PCT No.: PCT/SE03/00403 Int. Filing: 11 March 2003 Priority Date: 10 July 2002 Attorney Docket No.: PO5,0014 For: MEDICAL SYSTEM WITH A MULTI-DOT ELECTRODE, WHERE THE SUB-SIGNALS ARE COMBINED INTO A SYNTHETIC REFERENCE	DECISION ON PETITION UNDER 37 CFR 1.47(a)

This is a decision on applicant's "Petition For Filing Under 37 CFR 1.47(a)", filed in the United States Patent and Trademark Office (USPTO) on 29 September 2005, to accept the application without the signature of joint inventor, Ulf Lindegren. Petitioner also requests a one month extension of time, which is granted.

BACKGROUND

On 10 January 2005, applicant filed a transmittal letter (PTO-1390) requesting entry into the national stage in the United States of America under 35 U.S.C. § 371. Filed with the Transmittal Letter was, *inter alia*, the requisite basic national fee.

On 27 June 2005, a Notification of Missing Requirements was mailed to applicant indicating that an oath or declaration, in compliance with 37 CFR 1.497(a) and (b) and in accord with 37 CFR 1.66 or 1.68 was required.

On 29 September 2005, applicant filed the instant petition under 37 CFR 1.47(a). The petition requested the acceptance of the application without the signature of inventor Ulf Lindegren, alleging that Mr. Lindegren refuses to sign the application.

DISCUSSION

A petition under 37 CFR §1.47(a) must be accompanied by (1) the fee under 37 CFR §1.17(g), (2) factual proof that the non-signing joint inventor(s) refuses to execute the application or cannot be reached after diligent effort, (3) a statement of the last known address of the non-signing inventor(s), and (4) an oath or declaration by each available joint inventor on his or her own behalf and on behalf of the non-signing joint inventor(s).

The petition included a check for $130 for the petition fee. However the petition fee under 37 CFR 1.17(g) is $200. The additional $70 was charged to applicant's deposit account per his 10 January 2005 authorization. Thus Item (1) is satisfied.

Applicant attempted to satisfy Item (2) with the submission of declarations under 37 CFR 1.47(a) from Christina Barkstedt and Elisabeth Stark, patent administrators in the Patent Department of St. Jude Medical AB, regarding their attempts to obtain the signature of inventor Ulf Lindegren.

Ms. Barkstedt states that a complete copy of the application (specification, claims, drawings and declaration) was sent to Mr. Lindegren at his last known address on 18 July 2005. A copy of the letter sent to Mr. Lindegren (along with an English translation) was attached as Exhibit A. The letter's enclosure statement contradicts Ms. Barkstedt' statement as it notes: "Encl. Power-of-Attorney + self-addressed envelope." No where in her letter is there an indication that a complete copy of the application papers were sent to Lindegren.

Thereafter, on 16 August 2005 Ms. Stark sent a letter to Mr. Lindegren indicating that she resent "the application Declaration and a complete copy of the application (Specification, Claims, Drawings) to Mr. Lindegren requesting his signature on the declaration. A copy of this letter and an English language translation accompanied her statement as Exhibit B. The letter makes reference to "the originals (declaration and power-of-attorney)" sent earlier by Ms. Barkstedt. Ms. Stark indicates that she is "sending the originals again". This attempt is not sufficient evidence to show that a complete copy of the application papers (specification, claims, drawings and declaration) were sent to Mr. Lindegren.

A copy of the application papers *(specification, including claims, drawings, and oath or declaration)* should be sent to the last known address of the nonsigning inventor. It may be that Mr. Lindegren refuses to give a Power of Attorney but would not refuse to sign a declaration. Where a refusal of the inventor to sign the application papers is alleged, the circumstances of the presentation of the application papers and of the refusal must be specified in a statement of facts by the person who presented the inventor with the application papers and/or to whom the refusal was made. Whenever a nonsigning inventor gives a reason for refusing to sign the application oath or declaration, that reason should be stated in the petition. Statements by a party not present when an oral refusal is made will not be accepted. See Section 409.03(d) of the Manual of Patent Examining Procedure (MPEP), Proof of Unavailability or Refusal.

As further evidence in support of the petition, Ms. Stark attached a copy of an E-mail (with an English language translation) sent by Mr. Lindegren on 17 August 2005 to demonstrate his refusal to sign the application. The email concerns Mr. Lindegren's desire for compensation but does not indicate that he refuses to sign the application and gives no indication that he did indeed receive a complete copy of the application papers. Thus, at this time it cannot be concluded that Mr. Lindegren refuses to sign the application.

Item (3) is not yet satisfied because a statement of the last known address of non-signing inventor has not been provided.

With regard to item (4), the declaration was executed by the available joint inventor on his behalf and on behalf of the non-signing inventor and satisfies the requirements of 37 CFR 1.47(a).

The evidence submitted does not support a finding that the nonsigning inventor refuses to sign the application for the reasons set forth above. Accordingly, it is inappropriate to accord the national stage application status under 37 CFR §1.47(a) at this time.

CONCLUSION

The petition under 37 CFR §1.47(a) is **DISMISSED WITHOUT PREJUDICE.**

Any reconsideration on the merits of the petition under 37 CFR §1.47(a) must be filed within TWO (2) MONTHS from the mail date of this decision. Any reconsideration request should include a cover letter entitled "Renewed Petition Under 37 CFR §1.47(a)." No petition fee is required. Any further extensions of time available may be obtained under 37 CFR 1.136(a).

Any further correspondence with respect to this matter should be addressed to the Mail Stop PCT, Commissioner for Patents, Office of PCT Legal Administration, P.O. Box 1450, Alexandria, Virginia 22313-1450, with the contents of the letter marked to the attention of the Office of PCT Legal Administration.

Cynthia M. Kratz
Attorney Advisor
Office of PCT Legal Administration

Telephone: (571) 272-3286
Facsimile (571) 272-0459

IAP9 Rec'd PCT/PTO 04 APR 2006 #5

IN THE UNITED STATES PATENT AND TRADEMARK OFFICE

REQUEST FOR RECONSIDERATION OF DECISION ON PETITION DATED FEBRUARY 2, 2006

APPLICANTS:	Hans STRANDBERG et al.	CONFIRMATION NO. 5101
SERIAL NO.:	10/520,753	GROUP ART UNIT:
FILED:	January 10, 2005	EXAMINER:

TITLE: "MEDICAL SYSTEM WITH A MULTI-DOT ELECTRODE, WHERE THE SUB-SIGNALS ARE COMBINED INTO A SYNTHETIC REFERENCE"

RECEIVED

5 MAY 2006

Legal Staff
International Division

MAIL STOP PCT
Commissioner for Patents
P.O. Box 1450
Alexandria, Virginia 22313-1450

S I R:

On September 29, 2005, Applicants filed a Petition For Filing Under 37 C.F.R. §1.47(a), requesting that the above-referenced application be accepted without the signature of one of the joint inventors, Ulf Lindegren.

In a Decision dated February 2, 2006, it was stated that the evidence submitted with Applicants' Petition did not constitute adequate factual proof that the non-signing joint inventor refuses to execute the application, and also did not include a statement of the last known address of the non-signing inventor.

The present Request For Reconsideration is accompanied by another Declaration of Elisabeth Stark, wherein Elisabeth Stark states that the Declaration and Power of Attorney, and Assignment and a complete copy of the entirety of the above-referenced application were sent to Mr. Lindegren on February 10, 2006. Also attached to the Declaration of Elisabeth Stark is evidence that these documents were received by Mr. Lindegren. In her Declaration, Ms. Stark further states that she

personally participated in a telephone discussion with Mr. Lindegren, wherein Mr. Lindegren stated to Ms. Stark that he was refusing to sign the application.

The Declaration of Elisabeth Stark also includes a statement of the last known address of Mr. Lindegren, to which the aforementioned documents were sent, and for which proof of receipt whereof is provided.

All items required to proceed with the examination of this application without the signature of Mr. Lindegren are therefore satisfied, and reconsideration and granting of Applicants' Petition are therefore respectfully requested.

Submitted by,

Steven H. Noll (Reg. 28,982)

SCHIFF, HARDIN LLP
CUSTOMER NO. 26574
Patent Department
6600 Sears Tower
233 South Wacker Drive
Chicago, Illinois 60606
Telephone: 312/258-5790
Attorneys for Applicant.

CERTIFICATE OF MAILING

I hereby certify that this correspondence is being deposited with the United States Postal Service as First Class mail in an envelope addressed to: Commissioner for Patents, P.O. Box 1450, Alexandria, Virginia 22313-1450 on March 29, 2006.

Steven H. Noll

STEVEN H. NOLL

CH1\ 4514867.1

IN THE UNITED STATES PATENT AND TRADEMARK OFFICE

DECLARATION OF ELISABETH STARK

APPLICANTS:	Hans STRANDBERG et al.	CONFIRMATION NO. 5101
SERIAL NO.:	10/520,753	GROUP ART UNIT:
FILED:	January 10, 2005	EXAMINER:
TITLE:	"MEDICAL SYSTEM WITH A MULTI-DOT ELECTRODE, WHERE THE SUB-SIGNALS ARE COMBINED INTO A SYNTHETIC REFERENCE"	

Commissioner for Patents
P.O. Box 1450
Alexandria, Virginia 22313-1450

S I R:

I, ELISABETH STARK, declare and state as follows:

1. I am employed as a patent administrator in the Patent Department of St. Jude Medical AB, Järfälla, Sweden.

2. On February 10, 2006, I mailed a Declaration and Power of Attorney, an Assignment, and a complete copy of the entirety of the above-referenced United States patent application, in the form as filed in the United States Patent and Trademark Office on January 10, 2005, to Ulf Lindegren at his last known and current address, which is Essingeringen 72 D, 112 64 Stockholm, Sweden. A copy of my cover letter to Mr. Lindegren dated February 10, 2006, and an English translation thereof, are attached hereto as Exhibits A and B, respectively. I sent Exhibit A and the attachments indicated thereon to Mr. Lindegren by registered mail, and Mr. Lindegren returned the signed registered mail receipt, indicating that Mr. Lindegren received the mailing. A copy of the registered mail receipt signed by Mr. Lindegren is attached hereto.

3. Following receipt by Mr. Lindegren of Exhibit A and the enclosures thereto, I personally spoke with Mr. Lindegren by telephone and he stated to me that he refuses to sign the Declaration and Power of Attorney and the Assignment.

I hereby declare that all statements made herein of my own knowledge are true and that all statements made on information and belief are believed to be true; and further that these statements were made with the knowledge that willful false statements and the like so made are punishable by fine or imprisonment, or both, under Section 1001 of Title 18 of the United States Code, and that such willful false statements may jeopardize the validity of the application, any patent issued thereon, or any patent to which this verified statement is directed.

DATE: March 29, 2006

ELISABETH STARK

CH1\ 4514440.1

ST. JUDE MEDICAL

St. Jude Medical AB
Patent Department
SE-175 84 Järfälla, Sweden
Office address:
Veddestavägen 19, Järfälla, Sweden
Org. No. 556492-2291
Tph: +46-8-474 41 14
Fax: +46-8-761 29 05

Name: Elisabeth Stark
Our ref: A02 P 2014 PUS
Date: 2006-02-10

Ulf Lindegren
Essingeringen 72 D
112 64 STOCKHOLM

ALL-STATE LEGAL®
EXHIBIT
A

Betr.: Amerikansk patentansökan med titeln "Medical system with a multi-dot electrode, where the sub-signals are combined into a synthetic reference"
Vår ref.: A02 P 2014 PUS

Bäste Ulf,

Bifogar ånyo en fullmakt och överlåtelsehandling, vilka jag vore tacksam om Du undertecknar och returnerar till oss. Slå gärna en signal och bekräfta att de har avsänts. För Din kännedom skickar jag även med en kopia på den ansökningstext med ritningar som har ingivits till det amerikanska patentverket.

Skulle vi inte få ovannämnda underskrivna handlingar i retur före 28 februari 2006, så tolkar vi det som en vägran att underteckna dessa handlingar.

Med vänliga hälsningar

St. Jude Medical AB
Patentavdelningen

Elisabeth Stark

Bilagor: US Declaration and Power of Attorney + Assignment
Kopia på ansökningstext + ritningar ingivna i USA
Förfrankerat svarskuvert

St. Jude Medical AB
Patent Department
SE-175 84 Järfälla, Sweden
Office address:
Veddestavägen 19, Järfälla, Sweden
Org. No. 556492-2291
Tph: +46-8-474 41 14
Fax: +46-8-761 29 05

Name: Elisabeth Stark
Our ref: A02 P 2014 PUS
Date: February 10, 2006

Ulf Lindegren
Essingeringen 72 D
112 64 STOCKHOLM

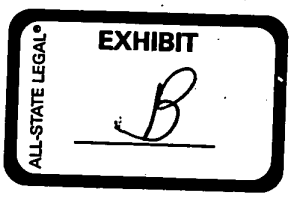

Re.: American patent application entitled "Medical system with a multi-dot electrode, where the sub-signals are combined into a synthetic reference"
Our ref.: A02 P 2014 PUS

Dear Ulf,

Once again I enclose a Power of Attorney and Assignment, which I would be grateful if you could sign and return to us. Please call to confirm that you have returned them by mail. For your information, I also enclose a copy of the application text and drawings filed with the American patent office.

Should we not receive the signed above documents from you by February 28, 2006, we will interpret this as a refusal to sign these documents.

Kind regards,

St. Jude Medical AB
Patent department

Elisabeth Stark

Enclosures: US Declaration and Power of Attorney + Assignment
Copy of application text + drawings filed in the US
Self-addressed stamped envelope

Inlämningspostkontor

MOTTAGNINGSBEVIS – Inrikes

Inlämningsdatum
2006-02-13

Värde, kr

☒ ESS-brev REK ☐ ESS-brev VÄRDE

Adressat (fylls i av avsändaren)	Namn och postadress Ulf Lindegren Essingeringen 72D 112 84 STOCKHOLM	Avsändarens referens, bokföringsnr e d A02P2014PUS
Om försändelsen inte får lämnas ut mot fullmakt, var god markera med ett kryss	☐ Får kvitteras endast av adressaten personligen	
Underskrift av adressaten eller ett ombud med fullmakt[1]	**Försändelsen har tagits emot** Namnteckning Om någon underskrift inte har kunnat erhållas anges orsaken här	Utlämningsdatum och signatur
Postens anteckningar	RECEIVED 2006-02-17 St. Jude Medical AB Patent Department	STOCKHOLM 2006-02-15 Stora Essinge Spelbolk

Bl 2012.01 (nov 97)

[1] Fullmakt gäller inte när avsändaren begärt Personlig kvittering

ALL-STATE LEGAL®
EXHIBIT
C

BEST AVAILABLE COPY

#6

UNITED STATES PATENT AND TRADEMARK OFFICE

Commissioner for Patents
United States Patent and Trademark Office
P.O. Box 1450
Alexandria, VA 22313-1450
www.uspto.gov

22 AUG 2006

SCHIFF HARDIN, LLP
PATENT DEPARTMENT
6600 SEARS TOWER
CHICAGO, IL 60606-6473

In re Application of STRANDBERG et al. Application No.: 10/520,753 PCT No.: PCT/SE03/00403 Int. Filing: 11 March 2003 Priority Date: 10 July 2002 Attorney Docket No.: PO5,0014 For: MEDICAL SYSTEM WITH A MULTI-DOT ELECTRODE, WHERE THE SUB-SIGNALS ARE COMBINED INTO A SYNTHETIC REFERENCE	DECISION ON RENEWED PETITION UNDER 37 CFR 1.47(a)

This is a decision on applicant's "Renewed Petition For Filing Under 37 CFR 1.47(a)", filed in the United States Patent and Trademark Office (USPTO) on 04 April 2006, to accept the application without the signature of joint inventor, Ulf Lindegren.

BACKGROUND

On 10 January 2005, applicant filed a transmittal letter (PTO-1390) requesting entry into the national stage in the United States of America under 35 U.S.C. § 371. Filed with the Transmittal Letter was, *inter alia*, the requisite basic national fee.

On 27 June 2005, a Notification of Missing Requirements was mailed to applicant indicating that an oath or declaration, in compliance with 37 CFR 1.497(a) and (b) and in accord with 37 CFR 1.66 or 1.68 was required.

On 29 September 2005, applicant filed a petition under 37 CFR 1.47(a). The petition requested the acceptance of the application without the signature of inventor Ulf Lindegren, alleging that Mr. Lindegren refuses to sign the application.

On 02 February 2006, a decision dismissing the petition was mailed indicating that Petitioner had failed to provide sufficient evidence regarding Mr. Lindegren's refusal.

On 04 April 2006, Petitioner filed a renewed petition with a declaration of first-hand knowledge.

DISCUSSION

A petition under 37 CFR §1.47(a) must be accompanied by (1) the fee under 37 CFR §1.17(g), (2) factual proof that the non-signing joint inventor(s) refuses to execute the application or cannot be reached after diligent effort, (3) a statement of the last known address of the non-

signing inventor(s), and (4) an oath or declaration by each available joint inventor on his or her own behalf and on behalf of the non-signing joint inventor(s).

Items (1) and (4) were previously satisfied.

Applicant has satisfied Item (2) with the statement of Elisabeth Stark, patent administrators in the Patent Department of St. Jude Medical AB, regarding her attempts to obtain the signature of inventor Ulf Lindegren. Ms. Stark states that a complete copy of the application (specification, claims, drawings and declaration) was sent to Mr. Lindegren at his last known address on 10 February 2006. A copy of the registered mail receipt indicating that Mr. Lindegren received the mailing was attached to and referenced in Ms. Stark's declaration. She further states that she "personally spoke with Mr. Lindegren by telephone" and he refused to sign the Declaration and Power of Attorney and the Assignment. Applicant has now provided sufficient evidence to conclude that Mr. Lindegren refuses to sign the application.

Item (3) is satisfied because Ms. Stark provided a statement of the last known address of non-signing inventor.

The evidence submitted supports a finding that the nonsigning inventor refuses to sign the application for the reasons set forth above. Accordingly, it is appropriate to accord the national stage application status under 37 CFR §1.47(a) at this time.

CONCLUSION

The petition under 37 CFR §1.47(a) is **GRANTED**.

The U.S. Designated/Elected Office is authorized to accept the application as a 37 CFR 1.47(a) application using the declaration filed 29 September 2005. The application has an international filing date of 11 March 2003 under 35 U.S.C. 363, and a date of 29 September 2005 under 35 U.S.C. 371(c)(1), (c)(2) and (c)(4).

As provided in 37 CFR 1.47(a), a notice of the filing of this application will be forwarded to the non-signing inventors at their respective last known address of record. Also, a notice of the filing of this application will be published in the Official Gazette.

Cynthia M. Kratz
Attorney Advisor
Office of PCT Legal Administration

Telephone: (571) 272-3286
Facsimile (571) 272-0459

UNITED STATES PATENT AND TRADEMARK OFFICE

Commissioner for Patents
United States Patent and Trademark Office
P.O. Box 1450
Alexandria, VA 22313-1450
www.uspto.gov

22 AUG 2006

ULF LINDEGREN
ESSINGERINGEN 72 D
112 64 STOCKHOLM
SWEDEN

In re Application of STRANDBERG et al. Application No.: 10/520,753 PCT No.: PCT/SE03/00403 Int. Filing: 11 March 2003 Priority Date: 10 July 2002 Attorney Docket No.: PO5,0014 For: MEDICAL SYSTEM WITH A MULTI-DOT ELECTRODE, WHERE THE SUB-SIGNALS ARE COMBINED INTO A SYNTHETIC REFERENCE	DECISION ON RENEWED PETITION UNDER 37 CFR 1.47(a)

Dear Mr. Lindegren:

You are named as an inventor in the above identified United States patent application, filed under the provisions of 37 CFR 1.47(a) and 35 U.S.C. § 116. Should a patent be granted, you will be designated as an inventor.

As a named inventor, you are entitled to inspect any paper in the file wrapper of the application, order copies of all or any part thereof (at a prepaid cost per 37 CFR 1.19) or to make your position of record in the application. Alternatively, you may arrange to do any of the preceding through a registered patent agent or attorney presenting written authorization from you. If you care to join in the application, counsel of record (see below) would presumably assist you. Joining in the application would entail the filing of an appropriate oath or declaration by you pursuant to 37 CFR 1.63.

Cynthia M. Kratz
Attorney Advisor
PCT Legal Office

Telephone: (571)272 -3286

SCHIFF HARDIN, LLP
PATENT DEPARTMENT
6600 SEARS TOWER
CHICAGO, IL 60606-6473

SPE RESPONSE FOR CERTIFICATE OF CORRECTION

Paper No.: _____

DATE : 10/21/07

TO SPE OF : ART UNIT 3745

SUBJECT : Request for Certificate of Correction for Appl. No.: **10/520760** Patent No.: **7207767**

Please respond to this request for a certificate of correction within 7 days.

Please review the requested changes/corrections as shown in the **COCIN** document(s) in the IFW application image. No new matter should be introduced, nor should the scope or meaning of the claims be changed.

Please complete the response (see below) and forward the completed response to scanning using document code **COCX**.

Angela Green
Certificates of Correction Branch
703.308.9380 ext. 123

Thank You For Your Assistance

The request for issuing the above-identified correction(s) is hereby:
Note your decision on the appropriate box.

- ☒ **Approved** — All changes apply.
- ☐ **Approved in Part** — Specify below which changes **do not** apply.
- ☐ **Denied** — State the reasons for denial below.

Comments: _____

Ed Tool
SPE

3745
Art Unit

UNITED STATES PATENT AND TRADEMARK OFFICE

UNITED STATES DEPARTMENT OF COMMERCE
United States Patent and Trademark Office
Address: COMMISSIONER FOR PATENTS
P.O. Box 1450
Alexandria, Virginia 22313-1450
www.uspto.gov

MOORE & VAN ALLEN PLLC
P.O. BOX 13706
Research Triangle Park, NC 27709

Mail Date: 04/21/2010

Applicant	: Anthony B. Fuller	: DECISION ON REQUEST FOR
Patent Number	: 7641183	: RECALCULATION of PATENT
Issue Date	: 01/05/2010	: TERM ADJUSTMENT IN VIEW
Appliction No	: 10/520,773	: OF WYETH AND NOTICE OF INTENT TO
Filed	: 11/14/2005	: ISSUE CERTIFICATE OF CORRECTION
		:

The Request for Recalculation is **GRANTED** to the extent indicated.

The patent term adjustment has been determined to be **0** days. The USPTO will *sua sponte* issue a certificate of correction reflecting the amount of PTA days determined by the recalculation.

Prior to the issuance of the certificate of correction, the USPTO will afford patentee an opportunity to be heard and request reconsideration. Accordingly, patentee has **one month or thirty (30) days**, whichever is longer, to file a request for reconsideration of this patent term adjustment calculation. See 35 U.S.C. 154(b)(3)(B)(ii) and 37 CFR 1.322(a)(4). No extensions of time will be granted under 37 CFR 1.136.

Patentee should use document code PET.OP if electronically filing a request for reconsideration of this patent term adjustment calculation. The patentee must also include the information required by 37 CFR 1.705(b)(2) and the fee required by 37 CFR 1.18(e). If patentee does not file a timely request for reconsideration of this patent term adjustment calculation including the information required by 37 CFR 1.705(b)(2) and the fee required by 37 CFR 1.18(e), the USPTO will issue a certificate of correction reflecting the PTA determination noted above.

Patentee should be aware that in order to preserve the right to review in the United States District Court for the District of Columbia of the USPTO patent term adjustment determination, patentee must ensure that he or she also take the steps required under 35 U.S.C. 154(b)(4)(A) in a timely manner. Nothing in the request for recalculation should be construed as providing an alternative time frame for commencing a civil action under 35 U.S.C. 154(b)(4)(A).

Any questions concerning this decision should be directed to the Office of Patent Legal Administration at 571-272-7702.

16 AUG 2005

United States Patent and Trademark Office

Commissioner for Patents
United States Patent and Trademark Office
P.O. Box 1450
Alexandria, VA 22313-1450
www.uspto.gov

Brinks Hofer Gilson & Lione
P.O. Box 10395
Chicago, IL 60610

In re Application of	:	
Davidson	:	
Application No.: 10/520,776	:	DECISION
PCT No.: PCT/US02/32633	:	
Int. Filing Date: 10 October 2002	:	ON
Priority Date: 04 December 2001	:	
Attorney Docket No.: 742-280	:	PETITION
For: Quick Release Mechanism For	:	
Tools Such As Socket Wrenches	:	

The petition to revive under 37 CFR 1.137(b) filed 07 January 2005 in the above-captioned application is hereby **GRANTED** as follows:

Applicant states that "the entire delay in filing the required reply from the due date for the required reply until the filing of a grantable petition under 37 CFR 1.137(b) was unintentional." This statement is being accepted in satisfaction of 37 CFR 1.137(b)(3).

A review of the application file reveals that the basic national fee of $150.00 was provided. The required petition fee of $750.00 was also paid. Thus, the requirements of 37 CFR 1.137(b) have been satisfied. Therefore, the request to revive the application abandoned under 35 U.S.C. 371(d) is granted as to the National stage in the United States of America.

This application is being forwarded to the United States Designated/Elected Office for further processing. Its date under 35 U.S.C. 371(c)(1), (2) and (4) is **07 January 2005**.

Boris Milef
PCT Legal Examiner
PCT Legal Office

George M. Dombroske
PCT Legal Examiner
PCT Legal Office
Tel: (571) 272-3283
Fax: (571) 273-0459

UNITED STATES PATENT AND TRADEMARK OFFICE

Commissioner for Patents
United States Patent and Trademark Office
P.O. Box 1450
Alexandria, VA 22313-1450
www.uspto.gov

Patrea L. Pabst
Pabst Patent Group, LLP
400 Colony Square, Suite 1200
1201 Peachtree Street
Atlanta, GA 30361

COPY MAILED

AUG 13 2007

OFFICE OF PETITIONS

In re Application of	:	
Andreas Lendlein et al.	:	
Application No. 10/520,782	:	DECISION ON PETITION
Filed: January 10, 2005	:	TO WITHDRAW
Attorney Docket No. 26538-0010	:	FROM RECORD
	:	

This is a decision on the Request to Withdraw as attorney or agent of record under 37 C.F.R. § 1.36(b), filed April 11, 2007.

The request is **NOT APPROVED** as moot.

A review of the file record indicates that the power of attorney to Patrea L. Pabst has been revoked by the assignee of the patent application on July 24, 2007. Accordingly, the request to withdraw under 37 C.F.R. § 1.36(b) is moot.

All future communications from the Office will continue to be directed to the below-listed address until otherwise notified by applicant.

Telephone inquires concerning this decision should be directed to Terri Williams at 571-272-2991.

T. Williams
Terri Williams
Petitions Examiner
Office of Petitions

cc: **Hogan & Hartson LLP**
IP Group, Columbia Square
555 Thirteenth Street, N.W.
Washington, DC 20004

#3

UNITED STATES PATENT AND TRADEMARK OFFICE

12 DEC 2005

Commissioner for Patents
United States Patent and Trademark Office
P.O. Box 1450
Alexandria, VA 22313-1450
www.uspto.gov

Anthony J. Zelano
MILLEN, WHITE, ZELANO & BRANIGAN, P.C.
2200 Clarendon Blvd., Suite 1400
Arlington, VA 22201

In re Application of	:	
ROHWER, ROBERT *et al*	:	
Application No.: 10/520,785	:	
PCT No.: PCT/US03/20065	:	
Int. Filing Date: 27 June 2003	:	**DECISION**
Priority Date: 27 June 2002	:	
Attorney Docket No.: UNIMD-0009	:	
For: METHODS FOR DETECTING AND	:	
INACTIVATING A PRION	:	

Applicants' "Petition for Revival of an International Application for Patent Designating the U.S. Abandoned Unintentionally Under 37 CFR 1.137(b)" filed with the national stage papers on 11 January 2005 is hereby **GRANTED** as follows:

The basic national fee and petition fee have been paid. Applicants state that "[t]he entire delay in filing the required reply from the due date for the reply until the filing of a grantable petition under 37 CFR 1.137(b) was unintentional" as required by 37 CFR 1.137(b)(3). A terminal disclaimer is not required. Accordingly, all requirements under 37 CFR 1.137(b) have been satisfied.

A signed oath or declaration has not been provided.

This application is being forwarded to the United States Designated/Elected Office for further processing including mailing a Notification of Missing Requirements Under 35 U.S.C. 371 in the United States Designated/Elected Office (DO/EO/US) (Form PCT/DO/EO/905) indicating that a declaration in compliance with 37 CFR 1.497(a) and (b) and a surcharge fee are required.

James Thomson

James Thomson
Attorney Advisor
Office of PCT Legal Administration

Tel.: (571) 272-3302

UNITED STATES PATENT AND TRADEMARK OFFICE

Commissioner for Patents
United States Patent and Trademark Office
P.O. Box 1450
Alexandria, VA 22313-1450
www.uspto.gov

COPY MAILED

SEP 0 8 2009

OFFICE OF PETITIONS

WILLIAMS MULLEN
222 CENTRAL PARK AVE
SUITE 1700
VIRGINIA BEACH VA 23462

In re Application of	:	
Andrew Sean Bissett	:	
Application No. 10/520,789	:	ON PETITION
Filed: August 22, 2005	:	
Attorney Docket No. 411963.0036	:	

This is in response to petition to revive an unintentionally abandoned application under 37 CFR 1.137(b), filed July 21, 2009.

The petition under 37 CFR 1.137(b) is **GRANTED**.

The above-identified application became abandoned for failure to timely file a proper response to the final Office action mailed December 19, 2008, which set a shortened statutory period for reply of three (3) months. No proper reply having been received, the application became abandoned on March 20, 2009. The Office mailed a Notice of Abandonment on July 14, 2009.

With the instant petition, petitioner paid the petition fee, made the proper statement of unintentional delay, and submitted the required reply in the form of a Notice of Appeal, together with a Pre-Appeal Brief Request for Review.

The file does not indicate a change of address has been submitted, although the address given on the petition differs

from the address of record. If appropriate, a change of address should be filed in accordance with MPEP 601.03. A courtesy copy of this decision is being mailed to the address given on the petition; however, the Office will mail all future correspondence solely to the address of record.

The application is being forwarded to Group Art Unit 3781 for consideration of the Pre-Appeal Brief Request for Review, filed May 19, 2009.

Telephone inquiries concerning this decision may be directed to the undersigned at 571-272-3207.

Cliff Congo
Petitions Attorney
Office of Petitions

cc: Gregory Stephens
4721 Emperor Blvd
Suite 400
Durham, NC 27703

UNITED STATES PATENT AND TRADEMARK OFFICE

COMMISSIONER FOR PATENTS
UNITED STATES PATENT AND TRADEMARK OFFICE
P.O. BOX 1450
ALEXANDRIA, VA 22313-1450
www.uspto.gov

SCHNADER HARRISON SEGAL & LEWIS, LLP
1600 MARKET STREET
SUITE 3600
PHILADELPHIA PA 19103

COPY MAILED

FEB 15 2007

OFFICE OF PETITIONS

Applicant: Sun
Appl. No.: 10/520,798
International Filing Date: June 18, 2003
Title: DEVICE TO RELIEVE THRUST LOAD IN A ROTOR-BEARING SYSTEM USING PERMANENT MAGNETS
Attorney Docket No.: 0299568-0420-PCT-US
Pub. No.: US 2006/0012258 A1
Pub. Date: January 19, 2006

This is a decision on the request for republication of patent application publication under 37 CFR 1.221(a), filed on February 27, 2006, for the above-identified application. The instant request is being treated as a request for republication, even thought applicant's representative appears to be making arguments that there is a material Office error in the publication.

The request under 37 CFR 1.221(a) is DISMISSED.

Applicant requests that the application be republished.

37 CFR 1.221(a) requires "a copy of the application in compliance with the Office electronic filing system requirements and be accompanied by the publication fee set forth in § 1.18(d) and the processing fee set forth in § 1.17(i)." If the request for republication does not comply with the electronic filing system requirements, the republication will not take place and the publication fee set forth in § 1.18(d) will be refunded. The processing fee will be retained.

The applicant did not supply a copy of the application in compliance with the Office electronic filing system, as required by 37 CFR 1.221(a). The publication fee and processing fee were not charged. The request for republication does not comply with the electronic filing system requirements, thus republication will not take place and the processing fee will be retained.

Any request for republication under 37 CFR 1.221(a), must be submitted via the EFS system, as a Pre-Grant publication submission.

The publication fee ($300) previously paid by Applicant has been refunded to Applicant's deposit account.

Any questions or requests for reconsideration of the decision, should be addressed as follows:

By mail to: Mail Stop PGPUB
Commissioner for Patents
P.O. Box 1450
Alexandria, Va. 22313-1450

By facsimile: 571-273-8300

Inquiries relating to this matter may be directed to Mark Polutta at (571) 272-7709 (voice).

Mark Polutta
Senior Legal Advisor
Office of Patent Legal Administration
Office of the Deputy Commissioner
for Patent Examination Policy

SPE RESPONSE FOR CERTIFICATE OF CORRECTION

Paper No.: _____

DATE : December 6, 2009

TO SPE OF : ART UNIT 2817

SUBJECT : Request for Certificate of Correction for Appl. No.: 10520805 Patent No.: 7576619

Please respond to this request for a certificate of correction within 7 days.

FOR IFW FILES:

Please review the requested changes/corrections as shown in the **COCIN** document(s) in the IFW application image. No new matter should be introduced, nor should the scope or meaning of the claims be changed.

Please complete the response (see below) and forward the completed response to scanning using document code **COCX**.

FOR PAPER FILES:

Please review the requested changes/corrections as shown in the attached certificate of correction. Please complete this form (see below) and forward it with the file to:

Certificates of Correction Branch (CofC)
Randolph Square – 9D40-C
Palm Location 7580

Certificates of Correction Branch

703-756-1573

Thank You For Your Assistance

The request for issuing the above-identified correction(s) is hereby:
Note your decision on the appropriate box.

☐ **Approved**	**All** changes apply.
☐ **Approved in Part**	Specify below which changes **do not** apply.
X Denied	State the reasons for denial below.

Comments: There is no certified copy of the priority document. /DM/

2817

SPE RESPONSE FOR CERTIFICATE OF CORRECTION

Paper No.: _____

DATE : December 6, 2009

TO SPE OF : ART UNIT 2817

SUBJECT : Request for Certificate of Correction for Appl. No.: 10520805 Patent No.: 7576619

Please respond to this request for a certificate of correction within 7 days.

FOR IFW FILES:

Please review the requested changes/corrections as shown in the **COCIN** document(s) in the IFW application image. No new matter should be introduced, nor should the scope or meaning of the claims be changed.

Please complete the response (see below) and forward the completed response to scanning using document code **COCX**.

FOR PAPER FILES:

Please review the requested changes/corrections as shown in the attached certificate of correction. Please complete this form (see below) and forward it with the file to:

Certificates of Correction Branch (CofC)
Randolph Square – 9D40-C
Palm Location 7580

Certificates of Correction Branch

703-756-1573

Thank You For Your Assistance

The request for issuing the above-identified correction(s) is hereby:
Note your decision on the appropriate box.

- ❑ **Approved** — **All** changes apply.
- ❑ **Approved in Part** — Specify below which changes **do not** apply.
- **X Denied** — State the reasons for denial below.

Comments: There is no certified copy of the priority document. /DM/

2817

SPE RESPONSE FOR CERTIFICATE OF CORRECTION

Paper No.: _____

DATE : December 6, 2009

TO SPE OF : ART UNIT 2817

SUBJECT : Request for Certificate of Correction for Appl. No.: 10520805 Patent No.: 7576619

Please respond to this request for a certificate of correction within 7 days.

FOR IFW FILES:

Please review the requested changes/corrections as shown in the **COCIN** document(s) in the IFW application image. No new matter should be introduced, nor should the scope or meaning of the claims be changed.

Please complete the response (see below) and forward the completed response to scanning using document code **COCX**.

FOR PAPER FILES:

Please review the requested changes/corrections as shown in the attached certificate of correction. Please complete this form (see below) and forward it with the file to:

Certificates of Correction Branch (CofC)
Randolph Square – 9D40-C
Palm Location 7580

Certificates of Correction Branch
703-756-1573

Thank You For Your Assistance

The request for issuing the above-identified correction(s) is hereby:
Note your decision on the appropriate box.

- [X] **Approved** — **All** changes apply.
- [ ] **Approved in Part** — Specify below which changes **do not** apply.
- [ ] **Denied** — State the reasons for denial below.

Comments: ~~There is no certified copy of the priority document. /DM/~~
Priority document is now in the file.
4/7/10

2817

PTOL-306 (REV. 7/03) U.S. DEPARTMENT OF COMMERCE Patent and Trademark Office

0 1 OCT 2007

United States Patent and Trademark Office

Commissioner for Patents
United States Patent and Trademark Office
P.O. Box 1450
Alexandria, VA 22313-1450
www.uspto.gov

Pehr Jansson
Pehr Jansson's Law Firm
7628 Parkview Circle
Austin TX 78731-1127

In re Application of Akkar et al. Application No.: 10/520,806 PCT No.: PCT/IB03/03120 Int. Filing Date: 07 July 2003 Priority Date: 09 July 2002 Attorney Docket No.: 76.0726/PR For: Method To Secure An Electronic Assembly Against Attacks By Error Introduction	DECISION ON PETITION

This is a decision on applicants' "Petition Under 37 CFR 1.182" filed on 08 August 2007 and the supplementary submission filed on 09 August 2007.

BACKGROUND

This international application was filed on 07 July 2003, claimed a priority date of 09 July 2002, and designated the United States. The International Bureau transmitted a copy of the published international application to the USPTO on 15 January 2004. Consequently, the thirty month period for payment of the basic national fee in the United States expired as of midnight on 10 January 2005 (since 09 January 2005 was a Sunday). On 10 January 2005, applicants filed *inter alia* the basic national fee.

On 13 April 2006, a Notification of Missing Requirements (Form PCT/DO/EO/905) was mailed to applicants, requiring the submission of additional claims fees, an executed oath or declaration of the inventors compliant with 37 CFR 1.497(a) and (b) and a surcharge under 37 CFR 1.492(h).

DISCUSSION

Petitioner states in part that

> A reply to the Notice of Missing Requirements was faxed to (571) 270-9872 on June 13, 2006 at 4:24 CST. The former partner of the undersigned submitted the reply while the undersigned was on an extended vacation.
>
> However, when checking on this application status my assistant called the PCT Help Desk and was told that the reply that was submitted on June 13, 2006 was not on file in the IFW...
>
> Applicants respectfully request that the reply to the Notice of Missing Requirements faxed on June 13, 2006 be considered a full response to the Notice of Missing Requirements. Attached with this petition is a copy of the reply packet that was sent on June 13, 2006 including the transmission verification report detailing the date and time of the fax transmission. Applicants respectfully request that any abandonment of this application be halted and the application be considered to be in good standing.

Thus, petitioner seeks to rely upon facsimile transmission evidence as a basis for the reply to be considered to have been timely filed. 37 CFR 1.8(b) provides that

> *In the event that correspondence is considered timely filed by being mailed or transmitted in accordance with paragraph (a) of this section, but not received in the U.S. Patent and Trademark Office after a reasonable amount of time has elapsed from the time of mailing or transmitting of the correspondence, or after the application is held to be abandoned, or after the proceeding is dismissed, terminated, or decided with prejudice, the correspondence will be considered timely if the party who forwarded such correspondence:*
>
> *(1) Informs the Office of the previous mailing or transmission of the correspondence promptly after becoming aware that the Office has no evidence of receipt of the correspondence;*
>
> *(2) Supplies an additional copy of the previously mailed or transmitted correspondence and certificate; and*
>
> *(3) Includes a statement which attests on a personal knowledge basis or to the satisfaction of the Director to the previous timely mailing or transmission. If the correspondence was sent by facsimile transmission, a copy of the sending unit's report confirming transmission may be used to support this statement.*

Petitioner has satisfied requirement (1).

Requirement (2) is satisfied by the filing of the supplemental submission on 09 August 2007, which included the additional copy of the correspondence.

Regarding requirement (3), petitioner has not provided an appropriate statement, made on the basis of first-hand knowledge, attesting to the timely transmission of the reply. Specifically, petitioner should provide a statement from his "former partner" attesting to the facts surrounding the alleged transmission of the reply. For this reason, the submitted docket sheets do not satisfy requirement (3).

Though petitioner has requested treatment under 37 CFR 1.182, this petition is does not require treatment under 37 CFR 1.182. Therefore, the $400.00 petition fee paid on 08 August 2007 is being refunded to Deposit Account No. 50-2299, as authorized by the Transmittal Letter filed on 10 January 2005.

DECISION

The petition is **DISMISSED**, without prejudice.

If reconsideration on the merits of this petition is desired, a proper response must be filed within **TWO (2) MONTHS** from the mail date of this decision (extendable under 37 CFR 1.136(a)).

Please direct any further correspondence with respect to this matter to the Assistant Commissioner for Patents, Mail Stop PCT, P.O. Box 1450, Alexandria, VA 22313-1450, and address the correspondence to the attention of the Office of PCT Legal Administration.

George Dombroske
PCT Legal Examiner
Office of PCT Legal Administration
Tel: (571) 272-3283
Fax: (571) 273-0459

Adjustment Date: 10/01/2007 SBASHEIR
08/09/2007 INTEFSW 00009026 10520806
01FC:1463 -400.00 OP
Refund Ref:
10/01/2007 0030045354

Credit Card Refund Total: $400.00

Am Exp..: XXXXXXXXXXX1001

2 2 JAN 2008

United States Patent and Trademark Office

Commissioner for Patents
United States Patent and Trademark Office
P.O. Box 1450
Alexandria, VA 22313-1450
www.uspto.gov

Pehr Jansson
Pehr Jansson's Law Firm
7628 Parkview Circle
Austin TX 78731-1127

In re Application of	:	
Akkar et al.	:	
Application No.: 10/520,806	:	DECISION
PCT No.: PCT/IB03/03120	:	
Int. Filing Date: 07 July 2003	:	ON
Priority Date: 09 July 2002	:	
Attorney Docket No.: 76.0726/PR	:	PETITION
For: Method To Secure An Electronic Assembly	:	
Against Attacks By Error Introduction	:	

This is a decision on applicants' "Reconsideration Request For Petition Under 37 CFR 1.182" filed on 26 November 2007.

DISCUSSION

In a Decision mailed on 01 October 2007, the previous "petition under 37 CFR 1.182" was dismissed without prejudice because, under 37 CFR 1.8(b),

> Regarding requirement (3), petitioner has not provided an appropriate statement, made on the basis of first-hand knowledge, attesting to the timely transmission of the reply. Specifically, petitioner should provide a statement from his "former partner" attesting to the facts surrounding the alleged transmission of the reply. For this reason, the submitted docket sheets do not satisfy requirement (3).
>
> Though petitioner has requested treatment under 37 CFR 1.182, this petition is does not require treatment under 37 CFR 1.182. Therefore, the $400.00 petition fee paid on 08 August 2007 is being refunded to Deposit Account No. 50-2299, as authorized by the Transmittal Letter filed on 10 January 2005.
>
> The $400.00 petition fee was refunded as not required.

In response, petitioner has provided a "Statement of Timely Transmission of Reply" signed by Jennifer A. Beasley, which satisfies 37 CFR 1.8(b)(3). All of the requirements of 37 CFR 1.8(b) having been satisfied, the 09 August 2007 "additional copy" of the correspondence originally filed on 13 June 2006 would be acceptable as a timely reply to the Notification of Missing Requirements mailed on 13 April 2006.

Further review of the record reveals that an acceptable declaration was filed under PCT Rule 4.17(iv). Therefore, the surcharge under 37 CFR 1.492(h) referenced in the Form PCT/DO/EO/905 mailed on 13 April 2006 was not required. In addition, petitioner paid a $400.00 petition fee under 37 CFR 1.182 on 26 November 2007, but said fee is not required, and accordingly it is being refunded.

DECISION

The petition is **GRANTED**, to the extent noted above.

This application is being forwarded to the Office of Patent Application Processing for further processing. Its date under 35 U.S.C. 371(c)(1), (2) and (4) is **10 January 2005**.

George Dombroske
PCT Legal Examiner
Office of PCT Legal Administration
Tel: (571) 272-3283
Fax: (571) 273-0459

13 SEP 2005

#9

UNITED STATES PATENT and TRADEMARK OFFICE

COMMISSIONER FOR PATENTS
UNITED STATES PATENT AND TRADEMARK OFFICE
P.O BOX 1450
ALEXANDRIA, VA 22313-1450
www.uspto.gov

BAKER & HOSTETLER LLP
Washington Square, Suite 1100
1050 Connecticut Avenue, N.W.
Washington, D.C. 20036

In re Application of	:	DECISION ON
Ostertag et al	:	
Application No.: 10/520,811	:	
PCT No.: PCT/EP2003/07418	:	
Int. Filing Date: 07 July 2003	:	PETITION UNDER
Priority Date: 07 July 2002	:	
Attorney's Docket No.: 87305.0044	:	
For: TRANSPONDER CIRCUIT	:	37 CFR.137(b)

This decision is in response to applicants' "Petition For Revival Of An International Application For Patent Designating The U.S. Abandoned Unintentionally Under 37 CFR 1.137(b)," filed on 15 July 2005.

BACKGROUND

On 07 July 2003, this international application was filed, claiming an earliest priority date of 07 July 2002. The deadline for paying the basic national fee in the United States under 35 U.S.C. 371 and 37 CFR 1.495 was 07 January 2005.

On 07 January 2005, applicants filed the Transmittal letter for entry into the national stage in the United States. However, the basic national fee was not provided at such time. Also, no executed declaration or oath was filed at such time.

On 08 July 2005, the USPTO mailed applicant Notification of Abandonment (Form PCT/DO/EO/909) indicating the applicant has failed to provide the full Basic National Fee by 30 months.

On 15 July 2005, applicant filed in the United States Patent and Trademark Office (USPTO) the instant petition, accompanied by, *inter alia*, the basic national fee and the petition fee for revival of an unintentionally abandoned application.

DISCUSSION

A grantable petition to revive an abandoned application under 37 CFR 1.137(b) must be accompanied by (1) the required reply, unless previously filed. In a nonprovisional application abandoned for failure to prosecute, the required reply may be met by the filing of a continuing application; (2) the petition fee as set forth in § 1.17(m); and (3) a statement that the entire delay in filing the required reply from the due date for the reply until the filing of a grantable petition pursuant to this paragraph was unintentional. The Commissioner may require additional information where there is a question whether the delay was unintentional; and (4) any terminal disclaimer (and fee as set forth in § 1.20 (d)) required pursuant to paragraph (c) of this section.

Petitioner has provided: (1) the proper reply by submitting the basic national filing fee, (2) the petition fee set forth in §1.17(m) and (3) the proper statement under 137(b)(3). In this application, no terminal disclaimer is required.

Accordingly, the petition is deemed to satisfy requirements (1), (2), (3), and (4) under 37 CFR 1.137(b).

DECISION

The petition under 37 CFR 1.137(b) is **GRANTED**.

This application is being returned to the United States Designated/Elected Office (DO/EO/US) for continued processing.

Rafael Bacares
PCT Legal Examiner
PCT Legal Office
Telephone: (571) 272-3672
Facsimile: (571) 272-0459

14 JUL 2005

UNITED STATES PATENT AND TRADEMARK OFFICE

COMMISSIONER FOR PATENTS
UNITED STATES PATENT AND TRADEMARK OFFICE
P.O. BOX 1450
ALEXANDRIA, VA 22313-1450
www.uspto.gov

RADAR, FISHMAN & GRAUER PLLC
1233 20th Street, N.W.
Suite 501
Washington, DC 20036

In re Application of:	:	
KAMEDA, Shozaburo, et al.	:	DECISION ON PETITION FOR
U.S. Application No.: 10/520,814	:	REVIVAL OF ABANDONED
PCT No.: PCT/JP03/08435	:	APPLICATION UNDER
International Filing Date: 03 July 2003	:	37 CFR 1.137(b)
Priority Date: 05 July 2002	:	
Attorney's Docket No.: KWM-0015	:	
For: ANTENNA WITH BUILT-IN FILTER	:	

The petition for revival under 37 CFR 1.137(b) filed 07 January 2005 in the above-captioned application is hereby **GRANTED** as follows:

Applicants' statement that "the entire delay in filing the required reply from the due date for the required reply until the filing of a grantable petition under 37 CFR 1.137(b) was unintentional" meets the requirements of 37 CFR 1.137(b)(3).

Applicants have now submitted the basic national fee and the requirements of 37 CFR 1.137(b) have been satisfied. Therefore, the request to revive the application is granted as to the national stage in the United States of America.

The petition was accompanied by a translation of the international application into English and an executed declaration in compliance with 37 CFR 1.497. Deposit Account No. 18-0013 will be charged the $130 surcharge for filing the declaration later than thirty months after the priority date and the $130 processing fee for filing the English translation later than thirty months after the priority.

This application is being returned to the National Stage Processing Division of the Office of PCT Operations for further processing in accordance with this decision. The date under 35 U.S.C. 371(c)(1), (c)(2), (c)(4) is 07 January 2005.

Richard M. Ross
PCT Petitions Attorney
Office Of PCT Legal Administration
Telephone: (571) 272-3296
Facsimile: (571) 273-0459

UNITED STATES PATENT AND TRADEMARK OFFICE

Commissioner for Patents
United States Patent and Trademark Office
P.O. Box 1450
Alexandria, VA 22313-1450
www.uspto.gov

NIXON & VANDERHYE, PC
901 NORTH GLEBE ROAD, 11TH FLOOR
ARLINGTON VA 22203

COPY MAILED

SEP 19 2007

OFFICE OF PETITIONS

Applicant: Froggatt et al.
Appl. No.: 10/520,819
International Filing Date: July 8, 2003
Title: POLARIZATION DIVERSITY DETECTION WITHOUT A POLARIZING BEAM SPLITTER
Attorney Docket No.: 3926-20
Pub. No.: US 2006/0164627 A1
Pub. Date: July 27, 2006

This is a decision on the request for a corrected patent application publication under 37 CFR 1.221(b), received on July 28, 2006, for the above-identified application

The request is granted-in-part.

Applicant requests that the application be republished because the patent application publication contains material errors, wherein the preliminary amendment to the specification was not included in the publication, letters which were italicized in the specification were not italicized in paragraphs [0009], [0010], [0038] and [0040], paragraph [0034] includes the letters "pr" before the word "processed", and there are errors in the formulas in paragraphs [0040] and [0042].

37 CFR 1.221 (b) is applicable "only when the Office makes **a material mistake** which is apparent from Office records.... Any request for a corrected publication or revised patent application publication other than provided as provided in paragraph (a) of this section must be filed within two months from the date of the patent application publication. This period is not extendable." A material mistake must affect the public's ability to appreciate the technical disclosure of the patent application publication, to determine the scope of the patent application publication, or to determine the scope of the provisional rights that an applicant may seek to enforce upon issuance of a patent. [1]

The request for republication of the application with respect to the errors labeled 6, 9 and 10 is GRANTED. The corrected patent application publication will be published in due course, unless the patent issues before the application is republished.

[1] Changes to Implement Eighteen-Month Publication of Patent Applications, 65 FR 57023, 57038 (Sept. 20, 2000), 1239, Off. Gaz. Pat. Office Notices 63, 75 (Oct. 10, 2000) (final rule).

The errors wherein certain letters in paragraphs [0002], [0010]], [0038] and [0040] were not italicized as presented in the application as filed may be Office errors, but pre-grant publications do not include italicization in the letters within paragraphs.

The error noted by requestor with respect to the preliminary amendment is not an Office error. The patent application publication does not include a mistake regarding the failure to include the preliminary amendment to the specification in the publication by the Office because patent application publications are not required to include preliminary amendments, according to 37 CFR 1.215(a), [2] which says the following, in part:

> (a) ... The patent application publication will be based upon the specification and drawings deposited on the filing date of the application, as well as the executed oath or declaration submitted to complete the application. **The patent application publication may also be based upon amendments to the specification (other than the abstract or the claims) that are reflected in a substitute specification under Sec. 1.125(b),** amendments to the abstract under Sec. 1.121(b), amendments to the claims that are reflected in a complete claim listing under Sec. 1.121(c), and amendments to the drawings under Sec. 1.121(d), provided that such substitute specification or amendment is submitted in sufficient time to be entered into the Office file wrapper of the application before technical preparations for publication of the application have begun. (emphasis added)

§ 1.215(c) says the following:

(c) At applicant's option, the patent application publication will be based upon the copy of the application (specification, drawings, and oath or declaration) as amended, provided that applicant supplies such a copy in compliance with the Office electronic filing system requirements within one month of the mailing date of the first Office communication that includes a confirmation number for the application, or fourteen months of the earliest filing date for which a benefit is sought under title 35, United States Code, whichever is later.

While the patent application publication may now include a preliminary amendment, the Office is not required to use the preliminary amendment. The Office changed the procedures for publication of patent applications so as to publish applications as amended, when possible. Until 2004, patent application publications were published as originally filed. See Patent Application Publications May Now Include Amendments, 1281 Off. Gaz. Pat. Office Notices 53 (April 13, 2004) and MPEP 1121. Applicant did not file a substitute specification, which incorporated the preliminary amendment. See Pre-Grant Publication Helpful Hint: File Continuation or Divisional Application with a New Specification and Copy of Oath or Declaration from Prior Application, 1251 Off. Gaz. Pat. Office Notices 54 (Oct. 9, 2001). The Office correctly published the application in accordance with 37 CFR 1.215(a).

---

[2] Changes to Support Implementation of the United States Patent and Trademark Office 21st Century Strategic Plan; Final Rule, 69 FR 56482 (Sept. 21, 2004).

Applicant is advised that he may want to file application papers that are clearer, as some of the error may be due to the quality of the text. The text in the application in some of the formulas is small and not clear, which makes it difficult to read and to electronically reproduce by digital imaging and optical character recognition. Applicants have been advised to file applications having cleaner and larger text with sufficient clarity and contrast to permit reproduction, such as electronic reproduction by digital imaging and optical character recognition, which will avoid errors in the patent application publication process. See 37 CFR 1.52.

Inquiries relating to this matter may be directed to Mark Polutta at (571) 272-7709.

Mark Polutta
Senior Legal Advisor
Office of Patent Legal Administration
Office of the Deputy Commissioner
for Patent Examination Policy

UNITED STATES PATENT AND TRADEMARK OFFICE

Commissioner for Patents
United States Patent and Trademark Office
P.O. Box 1450
Alexandria, VA 22313-1450
www.uspto.gov

DARBY & DARBY PC
PO BOX 770
CHURCH STREET STATION
NEW YORK NY 10008-0770

COPY MAILED

JUN 0 9 2009

OFFICE OF PETITIONS

In re Application of	:	
Eberhard J. Sauter	:	
Application No. 10/520,826	:	DECISION ON PETITION
Filed: July 11, 2005	:	
Attorney Docket No. 040668-US	:	

This is a decision on the petition to revive the above-identified application under 37 CFR 1.137(b), filed May 18, 2009.

The petition is **DISMISSED.**

Any request for reconsideration of this decision must be submitted within TWO (2) MONTHS from the mail date of this decision. Extensions of time under 37 CFR 1.136(a) are permitted. The reconsideration request should include a cover letter entitled "Renewed Petition Under 37 CFR 1.137(b)." This is **not** a final agency decision within the meaning of 5 USC 704.

The above-identified application became abandoned for failure to timely pay the issue fee and submit a substitute oath or declaration in response to the Notice of Allowance and Notice of Allowability, both mailed on April 9, 2007. These Notice set a statutory period for reply of three months. No extensions of time under 37 CFR 1.136(a) were available. No issue fee and substitute oath or declaration having been received, the application became abandoned on July 10, 2007. A Notice of Abandonment was mailed on August 8, 2007.

A grantable petition under 37 CFR 1.137(b) must be accompanied by: (1) the required reply, unless previously filed; (2) the petition fee as set forth in 37 CFR 1.17(m); (3) a statement that

the entire delay in filing the required reply from the due date for the reply until the filing of a grantable petition pursuant to 37 CFR 1.137(b) was unintentional; and (4) any terminal disclaimer (and fee as set forth in 37 CFR 1.20(d)) required by 37 CFR 1.137(d).

The instant petition lacks item (1). Petitioner did not submit a substitute oath or declaration as required by the Notice of Allowability. Moreover, it is noted that the PTOL-85b Issue Fee Transmittal form submitted is for application No. 10/250,826, not application No. 10/520,826.

It is not apparent whether the person signing the statement of unintentional delay was in a position to have firsthand or direct knowledge of the facts and circumstances of the delay at issue. Nevertheless, such statement is being treated as having been made as the result of a reasonable inquiry into the facts and circumstances of such delay. See 37 CFR 10.18(b) and Changes to Patent Practice and Procedure; Final Rule Notice, 62 Fed. Reg. 53131, 53178 (October 10, 1997), 1203 Off. Gaz. Pat. Office 63, 103 (October 21, 1997). In the event that such an inquiry has not been made, petitioner must make such an inquiry. If such inquiry results in the discovery that it is not correct that the entire delay in filing the required reply from the due date for the reply until the filing of a grantable petition pursuant to 37 CFR 1.137(b) was unintentional, petitioner must notify the Office.

Further correspondence concerning this application should be addressed as follows:

By mail: Mail Stop Petitions
Commissioner for Patents
P.O. Box 1450
Alexandria VA 22313-1450

By FAX: (571) 273-8300
Attn: Office of Petitions

Telephone inquiries concerning this decision should be directed to the undersigned at (571)272-3207.

Cliff Congo
Petitions Attorney
Office of Petitions

UNITED STATES PATENT AND TRADEMARK OFFICE

Commissioner for Patents
United States Patent and Trademark Office
P.O. Box 1450
Alexandria, VA 22313-1450
www.uspto.gov

DARBY & DARBY PC
PO BOX 770
CHURCH STREET STATION
NEW YORK NY 10008-0770

COPY MAILED
AUG 10 2009
OFFICE OF PETITIONS

In re Application of	:	
Eberhard J. Sauter	:	
Application No. 10/520,826	:	DECISION ON PETITION
Filed: July 11, 2005	:	
Attorney Docket No. 040668-US	:	

This is a decision on the renewed petition to revive the above-identified application under 37 CFR 1.137(b), filed June 22, 2009.

The petition is **GRANTED**.

The above-identified application became abandoned for failure to timely pay the issue fee and submit a substitute oath or declaration in response to the Notice of Allowance and Notice of Allowability, both mailed on April 9, 2007. These Notice set a statutory period for reply of three months. No extensions of time under 37 CFR 1.136(a) were available. No issue fee and substitute oath or declaration having been received, the application became abandoned on July 10, 2007. A Notice of Abandonment was mailed on August 8, 2007. Applicant filed a petition to revive under 37 CFR 1.137(b) on May 18, 2009. However, the petition was dismissed in a decision mailed on June 9, 2009. The petition ws dismissed because petitioner did not submit a substitute oath or declaration as required by the Notice of Allowability.

With the instant petition, petitioner filed a substitute oath or declaration.

Receipt of the RCE, filed with the instant petition is also acknowledged.

The application is being forwarded to Group Art Unit 2856 for consideration of the RCE, filed June 22, 2009.

Telephone inquiries concerning this decision should be directed to the undersigned at (571)272-3207.

Cliff Congo
Petitions Attorney
Office of Petitions

UNITED STATES PATENT AND TRADEMARK OFFICE

Commissioner for Patents
United States Patent and Trademark Office
P.O. Box 1450
Alexandria, VA 22313-1450
www.uspto.gov

LILLING & LILLING PLLC
PO BOX 435
JERUSALEM 91003
ISRAEL

COPY MAILED

NOV 2 4 2008

OFFICE OF PETITIONS

In re Application of	:	
Dan RAZ, et al	:	
Application No. 10/520,828	:	DECISION ON PETITION
Filed: September 12, 2005	:	TO WITHDRAW
Attorney Docket No. 415/13	:	FROM RECORD
	:	

This is a decision on the Request to Withdraw as attorney or agent of record under 37 C.F.R. § 1.36(b), filed November 3, 2008.

The request is **APPROVED**.

A grantable request to withdraw as attorney/agent of record must be signed by every attorney/agent seeking to withdraw or contain a clear indication that one attorney is signing on behalf of another/others. The Office requires the practitioner(s) requesting withdrawal to certify that he, she, or they have: (1) given reasonable notice to the client, prior to the expiration of the response period, that the practitioner(s) intends to withdraw from employment; (2) delivered to the client or a duly authorized representative of the client all papers and property (including funds) to which the client is entitled; and (3) notified the client of any responses that may be due and the time frame within which the client must respond, pursuant 37 CFR 10.40(c).

The request was signed by Bruce E. Lilling on behalf of the attorneys of record associated with Customer No. 24101.

The attorneys of record associated with Customer No. 24101 have been withdrawn.

Applicant is reminded that there is no attorney of record at this time.

The request to change the correspondence of record is not acceptable as the requested correspondence address is not that of: (1) the first named signing inventor; or (2) an intervening assignee of the entire interest under 37 C.F.R 3.71. All future communications from the Office will be directed to the first named signing inventor at the first copied address below until otherwise properly notified by the applicant.

In order to request or take action in a patent matter, the assignee must establish its ownership of the patent to the satisfaction of the Director. In this regard, a Statement under 37 CFR 3.73(b) must have either: (i) documentary evidence of a chain of title from the original owner to the assignee (*e.g.*, copy of an executed assignment), and a statement affirming that the documentary evidence of the chain of title from the original owner to the assignee was or concurrently is being submitted for recordation pursuant to § 3.11; or (ii) a statement specifying where documentary evidence of a chain of title from the original owner to the assignee is recorded in the assignment records of the Office (*e.g.*, reel and frame number).

Telephone inquiries concerning this decision should be directed to the undersigned at 571-272-6735.

Diane Goodwyn
Petitions Examiner
Office of Petitions

cc: DAN RAZ
62 HABIKURIM STREET
34577 HAIFA,
ISRAEL

cc: STRYKER GI LTD.
8 HAESHEL ST., BUSINESS AND
INDUSTRIAL PARK, P.O. BOX 3534
CAESAREA 38900
ISRAEL

14 JUL 2006

UNITED STATES PATENT AND TRADEMARK OFFICE

Commissioner for Patents
United States Patent and Trademark Office
P.O. Box 1450
Alexandria, VA 22313-1450
www.uspto.gov

YOUNG & THOMPSON
745 SOUTH 23RD STREET
2ND FLOOR
ARLINGTON VA 22202

In re Application of: GROSSIORD, Claude, et al. U.S. Application No.: 10/520,844 PCT No.: PCT/FR2003/002208 Int'l Filing Date: 11 July 2003 Priority Date: 11 July 2002 Attorney's Docket No.: 0502-1022 For: AUTOMATIC CLASP FOR WRISTWATCH STRAP	DECISION ON PETITION (37 CFR 1.47(a))

This decision is issued in response to the petition under 37 CFR 1.47(a) filed 22 August 2005. Deposit Account No. 25-0120 will be charged the $200 petition fee.

BACKGROUND

On 11 July 2003, applicants filed international application PCT/FR2003/002208. The international application claimed a priority date of 11 July 2002 April 2002, and it designated the United States. On 22 January 2004, the International Bureau (IB) communicated a copy of the international application to the United States Patent and Trademark Office (USPTO). The deadline for submission of the basic national fee was thirty months from the priority date, i.e., 11 January 2005.

On 11 January 2005, applicants filed a Transmittal Letter for entry into the U.S. national stage accompanied by, among other materials, payment of the basic national fee and a translation into English of the international application.

On 21 June 2005, the United States Designated/Elected Office (DO/EO/US) mailed a Notification Of Missing Requirements (Form PCT/DO/EO/905) indicating that an oath or declaration acceptable under 37 CFR 1.497 was required.

On 22 August 2005, applicants responded with the petition under 37 CFR 1.47(a) considered herein. The petition was accompanied by declarations executed by two of the three inventors and seeks acceptance of the application without the signature of the remaining inventor, Frederic NICOLET, whom applicants assert has refused to sign the application documents.

DISCUSSION

A grantable petition under 37 CFR 1.47(a) must be accompanied by: (1) the fee under 37 CFR 1.17; (2) a statement of the last known address of the non-signing inventor; (3) an oath or declaration by the other inventors on behalf of the other inventors on behalf of themselves and the non-signing inventor; and (4) factual proof that the inventor refuses to execute the application or cannot be reached after diligent effort.

The petition includes the authorization to charge Deposit Account No. 25-0120 the required petition fee and an express statement of the non-signing inventor's last known address. Accordingly, items (1) and (2) are satisfied.

Regarding item (3), section 409.03(a) of the Manual of Patent Examining Practice (MPEP) states that:

> An oath or declaration signed by all the available joint inventors with the signature block of the nonsigning inventor(s) left blank may be treated as having been signed by all the joint inventors on behalf of the nonsigning inventor(s), unless otherwise indicated.

Here, applicants have filed declarations executed by two of the three inventors and including an unsigned signature box identifying the non-signing inventor. This declaration is treated as having been executed by the available inventors on their own behalf and on behalf of the non-signing inventor. Item (3) is therefore satisfied.

Regarding item (4), applicants have submitted a statement from Mr. Guy PUIROUX, with accompanying documents, as evidence that the non-signing inventor has refused to execute the declaration. This submission includes the required firsthand statement that the nonsigning inventor has been provided with a request for signature, accompanied by a copy of the complete application (including specification, drawings and claims), and that the inventor has failed to execute the required documents, as requested. Item (4) is therefore satisfied.

Based on the above, applicants have satisfied all the requirements for a grantable petition under 37 CFR 1.47(a).

CONCLUSION

The petition under 37 CFR 1.47(a) is **GRANTED**. The application is accepted under 37 CFR 1.47(a) without the signature of inventor Frederic NICOLET.

As provided in 37 CFR 1.47(a), a notice of the filing of this application will be forwarded to the non-signing inventor at the last known address set forth in the petition, and notice of the filing of the application under 37 CFR 1.47(a) will be published in the Official Gazette.

This application is being forwarded to the National Stage Processing Branch of the Office of PCT Operations for further processing in accord with this decision. The date under 35 U.S.C. 371 (c)(1), (c)(2), and (c)(4) is 22 August 2005.

Richard M. Ross
Attorney Advisor
Office of PCT Legal Administration
Telephone: (571) 272-3296
Facsimile: (571) 273-0459

14 JUL 2006

UNITED STATES PATENT AND TRADEMARK OFFICE

Commissioner for Patents
United States Patent and Trademark Office
P.O. Box 1450
Alexandria, VA 22313-1450
www.uspto.gov

Mr. Frederic NICOLET
Rue Envers 8
CH-2605 Soceboz-Sonbeval
SWITZERLAND

In re Application of: GROSSIORD, Claude, et al.
U.S. Application No.: 10/520,844
PCT No.: PCT/FR2003/002208
Int'l Filing Date: 11 July 2003
Priority Date: 11 July 2002
Attorney's Docket No.: 0502-1022
For: AUTOMATIC CLASP FOR WRISTWATCH STRAP

Dear Mr. NICOLET:

You are identified as an inventor in the above identified United States patent application, filed under the provisions of 37 CFR 1.47(a) and 35 U.S.C. 116. Should a patent be granted, you will be designated as an inventor.

As a named inventor, you are entitled to inspect any paper in the file wrapper of the application, order copies of all or any part thereof (at a prepaid cost per 37 CFR 1.19) or to make your position of record in the application. Alternatively, you may arrange to do any of the preceding through a registered patent agent or attorney presenting written authorization from you. If you care to join the application, counsel of record (see below) would presumably assist you. Joining in the application would entail the filing of an appropriate oath or declaration by you pursuant to 37 CFR 1.63.

Richard M. Ross
Attorney Advisor
Office of PCT Legal Administration
Telephone: (571) 272-3296
Facsimile: (571) 273-0459

Counsel Of Record:
Benoit Castel
Young & Thompson
745 South 23rd Street
2nd Floor
Arlington VA 22202

SPE RESPONSE FOR CERTIFICATE OF CORRECTION

Paper No.: _____

DATE : 06-08-09

TO SPE OF : ART UNIT 2826

SUBJECT : Request for Certificate of Correction for Appl. No.: 10/520864 Patent No.: 7364660

Please respond to this request for a certificate of correction within 7 days.

FOR IFW FILES:

Please review the requested changes/corrections as shown in the **COCIN** document(s) in the IFW application image. No new matter should be introduced, nor should the scope or meaning of the claims be changed.

Please complete the response (see below) and forward the completed response to scanning using document code **COCX**.

FOR PAPER FILES:

Please review the requested changes/corrections as shown in the attached certificate of correction. Please complete this form (see below) and forward it with the file to:

Certificates of Correction Branch (CofC)
South Tower - 9A22
Palm Location 7580

Angela Green
Certificates of Correction Branch
703-756-1541

Thank You For Your Assistance

The request for issuing the above-identified correction(s) is hereby:
Note your decision on the appropriate box.

- [x] **Approved** — **All** changes apply.
- [ ] **Approved in Part** — Specify below which changes **do not** apply.
- [ ] **Denied** — State the reasons for denial below.

Comments: the correction is approved, based on the information according to the application Data Sheet of 11 January 2005.

/Ana Fortuna/ PrimaryExaminer, AU 1797

/Vickie Kim/ Supervisory Patent Examiner
SPE

1797
Art Unit

COCX
6/22/09

SPE RESPONSE FOR CERTIFICATE OF CORRECTION

Paper No.: _____

DATE : 06-08-09

TO SPE OF : ART UNIT 2826

SUBJECT : Request for Certificate of Correction for Appl. No.: 10/520864 Patent No.: 7364660

Please respond to this request for a certificate of correction within 7 days.

FOR IFW FILES:

Please review the requested changes/corrections as shown in the **COCIN** document(s) in the IFW application image. No new matter should be introduced, nor should the scope or meaning of the claims be changed.

Please complete the response (see below) and forward the completed response to scanning using document code **COCX**.

FOR PAPER FILES:

Please review the requested changes/corrections as shown in the attached certificate of correction. Please complete this form (see below) and forward it with the file to:

Certificates of Correction Branch (CofC)
South Tower - 9A22
Palm Location 7580

Angela Green
Certificates of Correction Branch
703-756-1541

Thank You For Your Assistance

The request for issuing the above-identified correction(s) is hereby:
Note your decision on the appropriate box.

- ☒ **Approved** — All changes apply.
- ☐ **Approved in Part** — Specify below which changes **do not** apply.
- ☐ **Denied** — State the reasons for denial below.

Comments: Correction request is approved by examiner, base on the information according to the application Data sheet filed Jan. 11. 2005.

/Ana Fortunal
Primary Patent Examiner
Art unit 1797

Vickie Kim 1797
SPE Art Unit

SPE RESPONSE FOR CERTIFICATE OF CORRECTION

Paper No.: _____

DATE : 06-08-09

TO SPE OF : ART UNIT 2826

SUBJECT : Request for Certificate of Correction for Appl. No.: 10/520864 Patent No.: 7364660

Please respond to this request for a certificate of correction within 7 days.

FOR IFW FILES:

Please review the requested changes/corrections as shown in the **COCIN** document(s) in the IFW application image. No new matter should be introduced, nor should the scope or meaning of the claims be changed.

Please complete the response (see below) and forward the completed response to scanning using document code **COCX**.

FOR PAPER FILES:

Please review the requested changes/corrections as shown in the attached certificate of correction. Please complete this form (see below) and forward it with the file to:

Certificates of Correction Branch (CofC)
South Tower - 9A22
Palm Location 7580

Angela Green
Certificates of Correction Branch
703-756-1541

Thank You For Your Assistance

The request for issuing the above-identified correction(s) is hereby:
Note your decision on the appropriate box.

- ☒ **Approved** — All changes apply.
- ☐ **Approved in Part** — Specify below which changes **do not** apply.
- ☐ **Denied** — State the reasons for denial below.

Comments: Correction request is approved by examiner, base on the information according to the application Data sheet filed Jan. 11. 2005.

/Ana Fortunal
Primary Patent Examiner
Art unit 1797

Vickie Kim 1797
SPE Art Unit

UNITED STATES PATENT AND TRADEMARK OFFICE

UNITED STATES DEPARTMENT OF COMMERCE
United States Patent and Trademark Office
Address: COMMISSIONER FOR PATENTS
P.O. Box 1450
Alexandria, Virginia 22313-1450
www.uspto.gov

KENYON & KENYON LLP
ONE BROADWAY
NEW YORK, NY 10004

Mail Date: 04/21/2010

Applicant	: Andrea Urban	: DECISION ON REQUEST FOR
Patent Number	: 7642545	: RECALCULATION of PATENT
Issue Date	: 01/05/2010	: TERM ADJUSTMENT IN VIEW
Appliction No	: 10/520,886	: OF WYETH AND NOTICE OF INTENT TO
Filed	: 07/21/2005	: ISSUE CERTIFICATE OF CORRECTION
		:

The Request for Recalculation is **GRANTED** to the extent indicated.

The patent term adjustment has been determined to be **632** days. The USPTO will *sua sponte* issue a certificate of correction reflecting the amount of PTA days determined by the recalculation.

Prior to the issuance of the certificate of correction, the USPTO will afford patentee an opportunity to be heard and request reconsideration. Accordingly, patentee has **one month or thirty (30) days**, whichever is longer, to file a request for reconsideration of this patent term adjustment calculation. See 35 U.S.C. 154(b)(3)(B)(ii) and 37 CFR 1.322(a)(4). No extensions of time will be granted under 37 CFR 1.136.

Patentee should use document code PET.OP if electronically filing a request for reconsideration of this patent term adjustment calculation. The patentee must also include the information required by 37 CFR 1.705(b)(2) and the fee required by 37 CFR 1.18(e). If patentee does not file a timely request for reconsideration of this patent term adjustment calculation including the information required by 37 CFR 1.705(b)(2) and the fee required by 37 CFR 1.18(e), the USPTO will issue a certificate of correction reflecting the PTA determination noted above.

Patentee should be aware that in order to preserve the right to review in the United States District Court for the District of Columbia of the USPTO patent term adjustment determination, patentee must ensure that he or she also take the steps required under 35 U.S.C. 154(b)(4)(A) in a timely manner. Nothing in the request for recalculation should be construed as providing an alternative time frame for commencing a civil action under 35 U.S.C. 154(b)(4)(A).

Any questions concerning this decision should be directed to the Office of Patent Legal Administration at 571-272-7702.

UNITED STATES PATENT AND TRADEMARK OFFICE

UNITED STATES DEPARTMENT OF COMMERCE
United States Patent and Trademark Office
Address: COMMISSIONER FOR PATENTS
P.O. Box 1450
Alexandria, Virginia 22313-1450
www.uspto.gov

FINNEGAN, HENDERSON, FARABOW, GARRETT & DUNNER LLP
901 NEW YORK AVENUE, NW
WASHINGTON, DC 20001-4413

Mail Date: 05/21/2010

Applicant	: Sverre Sondbo	: DECISION ON REQUEST FOR
Patent Number	: 7678930	: RECALCULATION of PATENT
Issue Date	: 03/16/2010	: TERM ADJUSTMENT IN VIEW
Application No	: 10/520,897	: OF WYETH
Filed	: 07/25/2005	:
		:

The Patentee's Request for Recalculation is **DISMISSED.**

This Request is deemed ineligible for consideration for one or more of the following reasons:

(A). The patent for which PTA recalculation is requested is either a design or reissue application or is a reexamination proceeding;

(B). The patent for which PTA recalculation is requested resulted from a utility or plant application filed under 35 USC 111(a) before May 29, 2000 and no CPA filed in the application on/after May 29, 2000;

(C). The patent for which PTA recalculation is requested resulted from an international application in which the international filing date was before May 29, 2000 and no CPA filed in the application on/after May 29, 2000;

(D). The patent for which PTA recalculation is requested issued on/after March 2, 2010;

(E). The Request for Recalculation was filed more than 180 days after the grant date of the patent and the request was not filed within two months of a dismissal of a request for reconsideration of the of the patent term under 37 CFR 1.705(d);

(F). The Request for Recalculation is not solely limited to USPTO pre-Wyeth interpretation of 35 U.S.C. 154(b)(2)(A);

or

(G). A civil action was filed pursuant to 35 U.S.C. 154(b)(4)(A)concerning the same patent at issue in this request.

Patentee may file a reply to this decision dismissing the Request for Recalculation. Patentee must file such reply within one month or thirty days, whichever is longer, of the mail date of the decision dismissing the Request for Recalculation. No fee is required if patentee is asserting in the reply that the dismissal for ineligibility is improper.

Patentee should use document code PET.OP if electronically filing a reply to this dismissal. If the USPTO finds that the request was improperly deemed ineligible, the USPTO will mail applicant a recalculation determination.

Patentee should be aware that in order to preserve the right to review in the United States District Court for the District of Columbia of the USPTO patent term adjustment determination, patentee must ensure that he or she also take the steps required under 35 U.S.C. 154(b)(4)(A). Nothing in the request for recalculation should be construed as providing an alternative time frame for commencing a civil action under 35 U.S.C. 154 (b)(4)(A).

Any questions concerning this decision should be directed to the Office of Patent Legal Administration at 571-272-7702.

SPE: T. Page

SPE RESPONSE FOR CERTIFICATE OF CORRECTION

Paper No.: _____

DATE : 2/23/07

TO SPE OF : ART UNIT 1621

SUBJECT : Request for Certificate of Correction for Appl. No.: 10/520,902 Patent No.: 7153997

Please respond to this request for a certificate of correction within 7 days.

Please review the requested changes/corrections as shown in the **COCIN** document(s) in the IFW application image. No new matter should be introduced, nor should the scope or meaning of the claims be changed.

Please complete the response (see below) and forward the completed response to scanning using document code **COCX**.

Lamonte M. Newsome
Certificates of Correction Branch
703-308-9390 ext. 112

Thank You For Your Assistance

The request for issuing the above-identified correction(s) is hereby:
Note your decision on the appropriate box.

- ☐ **Approved** — All changes apply.
- ☑ **Approved in Part** — Specify below which changes **do not** apply.
- ☐ **Denied** — State the reasons for denial below.

Comments: Name of the third inventor will not be changed as there is no proof provided either in the form of oath / declaration etc.

Johann Richter
JOHANN RICHTER
SUPERVISORY PATENT EXAMINER
GROUP 1600

SPE

1616
Art Unit

UNITED STATES PATENT AND TRADEMARK OFFICE

Commissioner for Patents
United States Patent and Trademark Office
P.O. Box 1450
Alexandria, VA 22313-1450
www.uspto.gov

BANNER & WITCOFF, LTD.
TEN SOUTH WACKER DRIVE
SUITE 3000
CHICAGO IL 60606

MAILED

MAY 19 2010

OFFICE OF PETITIONS

In re Application of	:	
BRON, Denis	:	
Application No. 10/520,909	:	DECISION ON PETITION
Filed: November 01, 2005	:	TO WITHDRAW
Attorney Docket No. **011382.00001**	:	FROM RECORD
	:	

This is a decision on the Request to Withdraw as attorney or agent of record under 37 C.F.R. § 1.36(b), filed April 07, 2010.

The request is **APPROVED**.

A grantable request to withdraw as attorney/agent of record must be signed by every attorney/agent seeking to withdraw or contain a clear indication that one attorney is signing on behalf of another/others. The Office requires the practitioner(s) requesting withdrawal to certify that he, she, or they have: (1) given reasonable notice to the client, prior to the expiration of the response period, that the practitioner(s) intends to withdraw from employment; (2) delivered to the client or a duly authorized representative of the client all papers and property (including funds) to which the client is entitled; and (3) notified the client of any responses that may be due and the time frame within which the client must respond, pursuant 37 CFR 10.40(c).

The request was signed by Robert Resis on behalf of all attorneys of record who are associated with customer No. 22908. All attorneys/agents associated with the Customer Number 22908have been withdrawn. Applicant is reminded that there is no attorney of record at this time.

All future correspondence will be directed to the first inventor Denis Bron at the address indicated below. There is an outstanding Office action mailed March 03, 2010 that requires a reply from the applicant.

Telephone inquiries concerning this decision should be directed to Tredelle Jackson at 571-272-2783.

/Tredelle D. Jackson/
Paralegal Specialist
Office of Petitions

cc: **DENIS BRON**
MYOVEC AG, HAUPTSTRASSE 125B
ERLINSBACH SO CH-5015

UNITED STATES PATENT AND TRADEMARK OFFICE

UNITED STATES DEPARTMENT OF COMMERCE
United States Patent and Trademark Office
Address: COMMISSIONER FOR PATENTS
P.O. Box 1450
Alexandria, Virginia 22313-1450
www.uspto.gov

STITES & HARBISON PLLC
1199 NORTH FAIRFAX STREET
SUITE 900
ALEXANDRIA, VA 22314

Mail Date: 04/21/2010

Applicant	: Gideon Levingston	: DECISION ON REQUEST FOR
Patent Number	: 7641381	: RECALCULATION of PATENT
Issue Date	: 01/05/2010	: TERM ADJUSTMENT IN VIEW
Appliction No	: 10/520,926	: OF WYETH AND NOTICE OF INTENT TO
Filed	: 02/06/2006	: ISSUE CERTIFICATE OF CORRECTION
		:

The Request for Recalculation is **GRANTED** to the extent indicated.

The patent term adjustment has been determined to be **411** days. The USPTO will *sua sponte* issue a certificate of correction reflecting the amount of PTA days determined by the recalculation.

Prior to the issuance of the certificate of correction, the USPTO will afford patentee an opportunity to be heard and request reconsideration. Accordingly, patentee has **one month or thirty (30) days**, whichever is longer, to file a request for reconsideration of this patent term adjustment calculation. See 35 U.S.C. 154(b)(3)(B)(ii) and 37 CFR 1.322(a)(4). No extensions of time will be granted under 37 CFR 1.136.

Patentee should use document code PET.OP if electronically filing a request for reconsideration of this patent term adjustment calculation. The patentee must also include the information required by 37 CFR 1.705(b)(2) and the fee required by 37 CFR 1.18(e). If patentee does not file a timely request for reconsideration of this patent term adjustment calculation including the information required by 37 CFR 1.705(b)(2) and the fee required by 37 CFR 1.18(e), the USPTO will issue a certificate of correction reflecting the PTA determination noted above.

Patentee should be aware that in order to preserve the right to review in the United States District Court for the District of Columbia of the USPTO patent term adjustment determination, patentee must ensure that he or she also take the steps required under 35 U.S.C. 154(b)(4)(A) in a timely manner. Nothing in the request for recalculation should be construed as providing an alternative time frame for commencing a civil action under 35 U.S.C. 154(b)(4)(A).

Any questions concerning this decision should be directed to the Office of Patent Legal Administration at 571-272-7702.

03 JUN 2006

UNITED STATES PATENT and TRADEMARK OFFICE

COMMISSIONER FOR PATENTS
UNITED STATES PATENT AND TRADEMARK OFFICE
P.O BOX 1450
ALEXANDRIA, VA 22313-1450
www.uspto.gov

ARNOLD & PROTER LLP
ATTN : IP Docketing
555 Twelfth Street, N.W.
Washington, DC 2004

In re Application of	:	DECISION ON
KREMER et al	:	
Application No.: 10/520,931	:	
PCT No.: PCT/EP2003/007551	:	
Int. Filing Date: 11 July 2003	:	PETITION UNDER
Priority Date: 12 July 2002	:	
Attorney Docket No.: 1874.008	:	
For: TRANSPLANT ACCEPTANCE INDUCING	:	
... PREPARATION AND UNSE	:	37 CFR 1.182

This decision is in response to petitioner's "RESPONSE TO NOTIFICATION OF DEFECTIVE RESPONSE" filed on 07 March 2006, which is being treated as a petition under 37 CFR 1.182. The petition fee of $400.00 has been charged to Deposit Account No. 50-2387.

BACKGROUND

On 12 January 2005, applicants filed in the United States Patent and Trademark Office (PTO) a Transmittal Letter (Form PTO-1390) accompanied by, *inter alia*, the basic national fee. Applicants, however, did not provide an executed oath or declaration as required under 35 U.S.C. 371(c)(4).

On 14 October 2005, the United States Designated/Elected Office (DO/EO/US) mailed a "NOTIFICATION OF MISSING REQUIREMENTS UNDER 35 U.S.C. 371 IN THE UNITED STATES DESIGNATED/ELECTED OFFICE (DO/EO/US)" (Form PCT/DO/EO/905) which informed applicant, inter alia, that an "Oath or Declaration of the inventors, in compliance with 37 CFR 1.497(a) and (b), identifying the application by the International application number and international filing date." It also stated that items set forth above must be submitted within two months from date of mailing or by 32 months from the priority date, whichever is later. Failure to properly respond will result in abandonment.

On 12 December 2005, applicants submitted an executed declaration. In the declaration section pertaining to the third named inventor, the name Maren SCHULZE appears; this name did not appear in the international application. In addition, the declaration has been signed by "Maren SCHULZE."

On 24 January 2006, the United States Designated/Elected Office (DO/EO/US) mailed a "NOTIFICATION OF A DEFECTIVE RESPONSE" (Form PCT/DO/EO/916) because the declaration was in not compliance with 37 CFR 1.497(a) and (b). It stated that inventor number three Maren Ruhnke as published but signed on the declaration as Maren Schulze. Therefore, form 306 is needed for such a change.

On 07 March 2006, petitioner filed the instant petition, which included an affidavit in support of the name change of the inventor from Maren Ruhnke to Maren Schulze.

DISCUSSION

MPEP § 605.04(c) requires in instances where an inventor has changed his or her name after the application has been filed to submit a petition under 37 CFR 1.182. The petition must include (1) the appropriate petition fee and (2) an affidavit signed with both names setting forth the procedure whereby the change of name was effected, or a certified copy of the court order.

With respect to item (1), the petition fee has been charged to petitioner's deposit account.

With respect to item (2), an affidavit has been provided signed under Maren Schulze. It sets forth the procedure whereby the change of name was effected from Maren Ruhnke (married name) to Maren Schulze (maiden name). Therefore, item (2) has been satisfied.

For the reasons above, the application may enter into national stage processing at this time.

CONCLUSION

The petition under 37 CFR §1.182 for change of name of inventor is **GRANTED**. This application is being returned to the United States Designated/Elected Office (DO/EO/US) for continued processing under 35 U.S.C. 371. The 35 USC 371(c)(1), (c)(2), and (c)(4) date of this application is **12 December 2005.**

Rafael Bacares
PCT Legal Examiner
PCT Legal Office
Telephone: (571) 272-3276
Facsimile: (571) 273-0459

UNITED STATES PATENT AND TRADEMARK OFFICE

Commissioner for Patents
United States Patent and Trademark Office
P.O. Box 1450
Alexandria, VA 22313-1450
www.uspto.gov

YOUNG & THOMPSON
209 MADISON STREET
SUITE 500
ALEXANDRIA VA 22314

MAILED

FEB 25 2009

OFFICE OF PETITIONS

In re Patent No. 7,299,702	:	
Issue Date: November 27, 2007	:	
Application No. 10/520,938	:	ON PETITION
Filed: October 31, 2005	:	
Attorney Docket No. 0522-1008	:	

This is a decision on the petition filed June 5, 2008, which is being treated as a request under 37 CFR 3.81(b)[1] to correct the name of the assignee on the front page of the above-identified patent by way of a Certificate of Correction.

The request is **GRANTED**.

Telephone inquiries concerning this decision may be directed to the undersigned at (571) 272-3204. Inquiries regarding the issuance of a certificate of correction should be directed to the Certificate of Correction Branch at (571) 272-4200.

The Certificates of Correction Branch will be notified of this decision granting the petition under 37 CFR 3.81(b) and directing issuance of the requested Certificate of Correction.

Sherry D. Brinkley
Petitions Examiner
Office of Petitions

[1] *See* MPEP 1309, subsection II; and Official Gazette of June 22, 2004.

20 MAY 2005

UNITED STATES PATENT AND TRADEMARK OFFICE

COMMISSIONER FOR PATENTS
UNITED STATES PATENT AND TRADEMARK OFFICE
P.O. BOX 1450
ALEXANDRIA, VA 22313-1450
www.uspto.gov

Tim Tingkang Xia
Morris, Manning & Martin, LLP
1600 Atlanta Financial Center
3343 Peachtree Read NE
Atlanta, GA 30326

In re Application of SEEL, *et al.* US Application No.: 10/520,954 PCT Application No.: PCT/EP2003/007513 Int. Filing Date: 10 July 2003 Priority Date: 12 July 2002 Attorney's File Reference: 14836-48177 For: ILLUMINATING DEVICE AND OPTICAL OBJECT-ANALYZING DEVICE	DECISION ON PETITION UNDER 37 CFR 1.137(b)

This decision is in response to applicants' "Petition for Revival of an Application for Patent Abandoned Unintentionally Under 37 CFR 1.137(b)" filed 25 February 2004. The petition is **GRANTED**.

BACKGROUND

On 10 July 2003, applicants filed international application PCT/EP2003/007513. The international application designated the United States and did claim priority to an earlier filed application. The deadline for paying the basic national fee in the United States was thirty months from the priority date, that is 12 January 2005. Applicant missed this deadline.

On 25 February 2005, applicant filed the instant petition for revival accompanied by, *inter alia*, a Transmittal Letter, the petition fee of $1500 and the basic national fee of $300.

An oath or declaration of the inventors required by 35 U.S.C. 371(c)(4) has not yet been received.

DISCUSSION

A petition to revive an abandoned application under 37 CFR 1.137(b) must be filed without intentional delay from the time the application became abandoned and/or applicant first became aware of the abandoned status of the application. A petition under 37 CFR 1.137(b) must be accompanied by (1) a proper reply, (2) the petition fee required by law, (3) a statement that the entire delay in filing the required reply from the due date for the reply until the filing of a grantable petition was unintentional, and (4) a terminal disclaimer and fee (if the international application was filed prior to June 8, 1995).

The submission of the basic national fee satisfies 37 CFR 1.137(b)(1). The payment of the petition fee satisfies the requirement under 37 CFR 1.137(b)(2). Applicant's statement in the petition that "[t]he entire delay in filing the required reply from the due date for the required reply until the filing of a grantable petition under 37 CFR 1.137(b) was unintentional" satisfies the requirements of 37 CFR 1.137(b)(3). A terminal disclaimer is not required because the application was filed after 08 June 1995, which satisfies the requirements of 37 CFR 1.137 (b)(4). Therefore, the requirements for a grantable petition under 37 CFR 1.137(b) have been satisfied.

CONCLUSION

The petition to revive the application abandoned under 37 CFR 1.137(b) is **GRANTED** as to the National Stage in the United States of America.

The application is being returned to the National Stage Processing Division of the Office of PCT Operations for continued processing, including the mailing of a Notification of Missing Requirements (PCT/DO/EO/905) indicating that an oath or declaration in compliance with 37 CFR 1.497(a)-(b) is required.

Craig Thompson
PCT Legal Administration Detailee
Office of PCT Legal Administration
Telephone: 571-272-6094
Facsimile: 571-272-0459

Boris Milef
PCT Legal Examiner
Office of PCT Legal Administration

28 JUL 2005

#7

UNITED STATES PATENT AND TRADEMARK OFFICE

COMMISSIONER FOR PATENTS
UNITED STATES PATENT AND TRADEMARK OFFICE
P.O. BOX 1450
ALEXANDRIA, VA 22313-1450
www.uspto.gov

MORRIS MANNING & MARTIN LLP
1600 Atlanta Financial Center
3343 Peachtree Road, NE
Atlanta, GA 30326-1044

In re Application of:	:	
SEEL, Matthias, et al.	:	DECISION REGARDING
U.S. Application No.: 10/520,954	:	SUBMISSION UNDER
PCT No.: PCT/EP03/07513	:	37 CFR 1.42
International Filing Date: 10 July 2003	:	
Priority Date: 12 July 2002	:	
Attorney's Docket No.: 14836-48177	:	
For: ILLUMINATING DEVICE AND	:	
OPTICAL OBJECT-ANALYZING	:	
DEVICE	:	

This communication is issued in response to applicants' submission on 17 June 2005 of a declaration executed on behalf of the deceased inventor, which has been treated as a submission under 37 CFR 1.42.

BACKGROUND

On 10 July 2003, applicants filed international application PCT/EP03/07513 that claimed a priority date of 12 July 2002 and designated the United States. On 22 January 2004, a copy of the international application was communicated to the United States Patent and Trademark Office (USPTO) by the International Bureau (IB). The deadline for submission of the basic national fee was thirty months from the priority date, i.e., 12 January 2005.

On 10 January 2005, applicants filed a Transmittal Letter for entry into the national stage in the United States accompanied by, among other materials, an English translation of the international application. The submission did not include payment of the basic national fee, resulting in abandonment of the application with respect to the United States.

On 25 February 2004, applicants filed a petition for revival under 37 CFR 1.137(b) accompanied by payment of the basic national fee.

On 20 May 2005, this Office mailed a decision granting the petition for revival under 37 CFR 1.137(b).

On 25 May 2005, the United States Designated/Elected Office (DO/EO/US) mailed a Notification Of Missing Requirements (Form PCT/DO/EO/905) indicating that an oath or declaration acceptable under 37 CFR 1.497 and additional claims fees were required.

On 17 June 2005, applicants filed a response to the Notification Of Missing Requirements that included payment of the required claims fees and a declaration executed by the surviving inventor and on behalf of deceased inventor Klaus SCHALLER by his legal representative, Ines SCHALLER.

DISCUSSION

37 CFR 1.42 states in part:

> In case of the death of the inventor, the legal representative (executor, administrator, etc.) of the deceased inventor may make the necessary oath or declaration, and apply for and obtain the patent.

37 CFR 1.497(b)(2) states:

> If the person making the oath or declaration or any supplemental oath or declaration is not the inventor (§§ 1.42, 1.43, or 1.47) the oath or declaration shall state the relationship of the person to the inventor, and, upon information and belief, the facts which the inventor would have been required to state. If the person is the legal representative of a deceased inventor, the oath or declaration shall also state that the person is a legal representative and the citizenship, residence, and mailing address of the legal representative.

Pursuant to 37 CFR 1.497(b)(2), the declaration must provide the citizenship, mailing address, and residence information for **both** the deceased inventor and the legal representative. Here, the filed declaration does not comply with 37 CFR 1.497(b)(2) in that it does not provide separate citizenship, mailing address, and residence information for the legal representative.

Because the filed declaration does not include all the information required by 37 CFR 1.497(b)(2), the declaration cannot be accepted under 37 CFR 1.42 and 37 CFR 1.497.

CONCLUSION

The 17 June 2005 submission under 37 CFR 1.42 is **REJECTED** without prejudice.

Applicants have **TWO (2) MONTHS** from the mail date this communication to submit a proper response under 37 CFR 1.42 and 1.497. Failure to file a proper and timely response will result in abandonment. Extensions of time are available under 37 CFR 1.136(a).

A proper response must include an oath or declaration executed on behalf of the deceased inventor by his legal representative and containing all the information required under 37 CFR 1.497, including, as discussed above, the citizenship, residence, and mailing address of both the legal representative and the deceased inventor.

Please direct further correspondence with respect to this matter to Mail Stop PCT, Commissioner for Patents, Office of PCT Legal Administration, P.O. Box 1450, Alexandria, Virginia 22313-1450, with the contents of the letter marked to the attention of the Office of PCT Legal Administration.

Richard M. Ross
PCT Petitions Attorney
Office Of PCT Legal Administration
Telephone: (571) 272-3296
Facsimile: (571) 273-0459

14 OCT 200

UNITED STATES PATENT AND TRADEMARK OFFICE

COMMISSIONER FOR PATENTS
UNITED STATES PATENT AND TRADEMARK OFFICE
P.O. BOX 1450
ALEXANDRIA, VA 22313-1450
www.uspto.gov

MORRIS MANNING & MARTIN LLP
1600 Atlanta Financial Center
3343 Peachtree Road, NE
Atlanta, GA 30326-1044

In re Application of: SEEL, Matthias, et al. U.S. Application No.: 10/520,954 PCT No.: PCT/EP03/07513 International Filing Date: 10 July 2003 Priority Date: 12 July 2002 Attorney's Docket No.: 14836-48177 For: ILLUMINATING DEVICE AND OPTICAL OBJECT-ANALYZING DEVICE	DECISION REGARDING RENEWED SUBMISSION UNDER 37 CFR 1.42

The present decision is issued in response to the "Response To Decision Regarding Submission Under 37 CFR 1.42" filed by applicants on 27 September 2005, treated herein as a renewed submission under 37 CFR 1.42. No petition fee is required.

BACKGROUND

The procedural background for this application was set forth in the decision mailed by this Office on 28 July 2005. In that decision, applicants' 17 June 2005 submission under 37 CFR 1.42 was rejected without prejudice for failure to include all the information required under 37 CFR 1.497(b)(2).

On 27 September 2005, applicants' filed the "Response To Decision Regarding Submission Under 37 CFR 1.42" considered herein. The submission includes a revised declaration.

DISCUSSION

The revised declaration accompanying the present submission contains the information required under 37 CFR 1.497(b)(2), including the citizenship, address, and residence information for both the deceased inventor and his legal representative. The supplemental declaration is therefore acceptable under 37 CFR 1.42.

CONCLUSION

Applicants' request for status under 37 CFR 1.42 with respect to deceased inventor Klaus SCHALLER is **GRANTED**.

This application is being returned to the National Stage Processing Branch of the Office Of PCT Operations for further processing in accordance with this decision. The date under 35 U.S.C. 371(c)(1), (c)(2), and (c)(4) is 27 September 2005.

Richard M. Ross
PCT Petitions Attorney
Office Of PCT Legal Administration
Telephone: (571) 272-3296
Facsimile: (571) 273-0459

16 AUG 2005

UNITED STATES PATENT AND TRADEMARK OFFICE

COMMISSIONER FOR PATENTS
UNITED STATES PATENT AND TRADEMARK OFFICE
P.O. BOX 1450
ALEXANDRIA, VA 22313-1450
www.uspto.gov

KNOBBE MARTENS OLSON & BEAR LLP
2040 MAIN STREET
FOURTEENTH FLOOR
IRVINE CA 92614

In re Application of	:	
MOORE	:	
Application No.: 10/520,959	:	DECISION ON
PCT No.: PCT/AU03/00400	:	
Int. Filing Date: 03 April 2003	:	PETITION UNDER
Priority Date: 03 April 2002	:	
Attorney Docket No.: DUMME58.001APC	:	37 CFR 1.137(b)
For: IMPROVEMENTS IN PHALLOPLASTY	:	

This decision is in response to applicants' submission filed 11 January 2005.

BACKGROUND

On 03 April 2003, applicants filed international application PCT/AU03/00400 which designated the U.S. and claimed a priority date of 03 April 2002. A copy of the international application was communicated to the United States Patent and Trademark Office (USPTO) from the International Bureau on 09 October 2003. The thirty-month period for paying the basic national fee in the United States expired at midnight on 03 October 2004.

On 11 January 2005, applicants filed a transmittal letter for entry into the national stage in the United States, which was accompanied by, *inter alia*, the basic national fee, an assertion of small entity status, and a petition under 37 CFR 1.137(b).

DISCUSSION

A petition to revive the present application under 37 CFR 1.137(b) must include:
(1) The required reply;
(2) The petition fee;
(3) A statement that the entire delay in filing the required reply from the due date for the reply until the filing of a grantable petition was unintentional.

As to item (1), applicant submitted the basic national fee on 11 January 2005.

As to item (2), applicant submitted the petition fee on 11 January 2005.

As to item (3), petitioner's statement that "the entire delay in filing the U.S. National Stage was unintentional" has been construed as meaning that the "entire delay in filing the

required reply from the due date for the reply until the filing of this petition under 37 CFR 1.137(b) was unintentional." If this interpretation is incorrect, applicant must *immediately* notify the Office of PCT Legal Administration of such fact.

A review of the application file reveals that, with the filing of the present petition and accompanying papers, a proper response has been submitted and all of the requirements of 37 CFR 1.137(b) for revival have been satisfied and revival is therefore appropriate.

CONCLUSION

The petition under 37 CFR 1.137(b) is **GRANTED** for the reasons set forth above.

Please direct further correspondence with respect to this matter to Mail Stop PCT, Commissioner for Patents, Office of PCT Legal Administration, P.O. Box 1450, Alexandria, Virginia 22313-1450, with the contents of the letter marked to the attention of the Office of PCT Legal Administration.

This application is being forwarded to the National Stage Processing Branch of the Office of PCT Operations to continue national stage processing of the application preparing and mailing a NOTIFICATION OF MISSING REQUIREMENTS (Form PCT/DO/EO/905) requiring an oath or declaration of the inventors in compliance with 37 CFR 1.497(a)-(b) and the surcharge under 37 CFR 1.492(e) for providing the oath or declaration later than thirty months from the priority date.

Daniel Stemmer
Legal Examiner
PCT Legal Affairs
Office of Patent Cooperation Treaty
Legal Administration
Telephone: (571) 272-3301
Facsimile: (571) 273-0459

UNITED STATES PATENT AND TRADEMARK OFFICE

Commissioner for Patents
United States Patent and Trademark Office
P.O. Box 1450
Alexandria, VA 22313-1450
www.uspto.gov

Carl M. Napolitano, Ph.D.
ALLEN, DYER, DOPPELT, MILBRATH & GILCHRIST, P.A.
255 South Orange Ave., Suite 1401
P.O. Box 3791
Orlando, FL 32802-3791

COPY MAILED

FEB 19 2008

OFFICE OF PETITIONS

In re Application of	:	
Olivier Carli	:	
Application No. 10/520,961	:	DECISION ON PETITION
Filed: January 11, 2005	:	
Attorney Docket No. 38918	:	

This is a decision on the petition under the unintentional provisions of 37 CFR 1.137(b), filed 31 December 2007, to revive the above-identified application.

The petition is **GRANTED**.

The application became abandoned for failure to reply in a timely manner to the non-final Office action mailed 07 August 2006, which set a shortened statutory period for reply of three (3) months. No extensions of time under the provisions of 37 CFR 1.136(a) were obtained. Accordingly, the application became abandoned on 08 November 2006.

The petition satisfies the requirements of 37 CFR 1.137(b) in that petitioner has supplied (1) the reply in the form of a response to the office action mailed on 07 August 2006, (2) the petition fee of $770.00, and (3) a proper statement of unintentional delay.

The revocation and power of attorney referred to in the petition have not been received.

It is not apparent whether the person signing the statement of unintentional delay was in a position to have firsthand or direct knowledge of the facts and circumstances of the delay at issue. Nevertheless, such statement is being treated as having been made as the result of a reasonable inquiry into the facts and circumstances of such delay. See 37 CFR 10.18(b) and Changes to Patent Practice and Procedure; Final Rule Notice, 62 Fed. Reg. 53131, 53178 (October 10, 1997), 1203 Off. Gaz. Pat. Office 63, 103 (October 21, 1997). In the event that such an inquiry has not been made, petitioner must make such an inquiry. If such inquiry results in the discovery that the entire delay in filing the required reply from the due date for the reply until the filing of a grantable petition pursuant to 37 CFR 1.137(b) was intentional, petitioner must notify the Office.

There is no indication that the person signing the petition was ever given a power of attorney to prosecute the application. If the person signing the petition desires to receive future correspondence regarding this application, the appropriate power of attorney document must be submitted. While a courtesy copy of this decision is being mailed to the person signing the petition, all future correspondence will be directed to the address currently of record until appropriate instructions are received.

Telephone inquiries concerning this decision should be directed to Allen C. Ho at (571) 272-6052.

This application is being referred to Technology Center AU 3733 for appropriate action by the Examiner in the normal course of business on the reply received

David Buccì
Petitions Examiner
Office of Petitions

Cc:
Ira J. Schultz
Dennison Schultz & MacDonald
1727 King Street, Suite 105
Alexandria, VA 22314-2700

UNITED STATES PATENT AND TRADEMARK OFFICE

Commissioner for Patents
United States Patent and Trademark Office
P.O. Box 1450
Alexandria, VA 22313-1450
www.uspto.gov

#8

24 JAN 2006

Merck & Co., Inc.
Patent Department, RY60-30
P. O. Box 2000
126 East Linclon Avenue
Rahway, New Jersey 07065-0970

In re Application of
ANKER et al.
U.S. Application No. 10/520,962
PCT No.: PCT/US03/21493
Int. Filing Date: 08 July 2003
Priority Date: 11 July 2002
Attorney Docket No.: MS0012YP
For: TREATMENT FOR NEUROPATHIC PAIN WITH 6H-PYRROLO[3,4-D] PYRIDAZINE COMPOUNDS

DECISION ON REQUEST

This decision is in response to applicants' Petition under 37 CFR 1.497(d) filed 28 November 2005. The petition fee will be charged to Deposit Account no. 13-2755.

BACKGROUND

On 08 July 2003, applicants filed international application PCT/US03/21493 which claimed a priority date of 11 July 2002. The international application named Naomi Burke Anker; Jeannie M. Arruda; Brian Thomas Campbell; Benito Munoz; Petpiboon Prasit; and Brian A. Stearns as applicants/inventors. Pursuant to 37 CFR 1.495, the deadline for payment of the basic national fee was to expire 30 months from the priority date, 11 January 2005.

On 10 January 2005, applicants filed a transmittal letter for entry into the national stage accompanied by, *inter alia:* the requisite basic national fee; a copy of the international application; and a preliminary amendment.

On 24 June 2005, the United Stated Designated/Elected Office mailed a Notification of Missing Requirements (Form PCT/DO/EO/905) indicating that an oath or declaration in compliance with 37 CFR 1.497(a) and (b) must be filed. The notification set a two-month time limit in which to respond.

On 28 November 2005, applicants filed a Petition under 37 CFR 1.497(d) and a declaration executed by: Naomi Burke Anker; Jeannie M. Arruda; Brian Thomas Campbell; Benito Munoz; Petpiboon Prasit; Brian A. Stearns and Tao Hu.

DISCUSSION

In the instant case, the international application named Naomi Burke Anker; Jeannie M. Arruda; Brian Thomas Campbell; Benito Munoz; Petpiboon Prasit; and Brian A. Stearns as applicants/inventors. Applicants request to add Tao Hu as an applicant/inventor. In order to correct an error in naming the inventor(s) made during the international stage in the national stage, a submission under 37 CFR 1.497(d) is required.

A submission under 37 CFR 1.497(d) to correct an error in naming inventorship requires: (1) a statement from each person being added or deleted as an inventor that the error in inventorship occurred without any deceptive intention on his or her part; (2) an oath or declaration by the actual inventor(s) as required by 37 CFR 1.497(a); (3) the fee set forth in 37 CFR 1.17; and (4) if an assignment has been executed by any of the original named inventors, the written consent of the assignee in compliance with 37 CFR 3.73(b).

Applicants have satisfied items (1); (2); and (3).

Regarding item (4) above, applicants have not provided a written consent of the assignee. Additionally, the assignee must establish its ownership to the application in accordance with 37 CFR 3.73. It is noted that the assignment allegedly filed is not located therein. See Manuel of Patent Examining Procedure (MPEP) §324 and Statement under 37 CFR 3.73(b) (Form PTO/SB/96).

For the reasons discussed above, it is inappropriate to grant applicants request for correction of inventorship.

CONCLUSION

For the reasons discussed above, applicants' request under 37 CFR 1.497(d) is **DISMISSED** without prejudice.

A proper response must be filed within **TWO (2) MONTHS** from the mail date of this decision. Extensions of time may be obtained under 37 CFR 1.136(a).

Any further correspondence with respect to this matter should be addressed to: Mail Stop PCT, Commissioner for Patents, Office of PCT Legal Administration, P.O. Box 1450, Alexandria, Virginia 22313-1450, with the contents of the letter marked to the attention of the Office of PCT Legal Administration.

Anthony Smith

Anthony Smith
Attorney-Advisor
Office of PCT Legal Administration
Tel: (571) 272-3298
Fax: (571) 273-0459

07 MAR 2006

UNITED STATES PATENT AND TRADEMARK OFFICE

Commissioner for Patents
United States Patent and Trademark Office
P.O. Box 1450
Alexandria, VA 22313-1450
www.uspto.gov

Merck & Co., Inc.
Patent Department, RY60-30
P. O. Box 2000
126 East Lincoln Avenue
Rahway, New Jersey 07065-0970

In re Application of
ANKER et al.
U.S. Application No. 10/520,962
PCT No.: PCT/US03/21493
Int. Filing Date: 08 July 2003
Priority Date: 11 July 2002
Attorney Docket No.: MS0012YP
For: TREATMENT OF NEUROPATHIC PAIN WITH 6H-PYRROLO[3,4-D] PYRIDAZINE COMPOUNDS

DECISION ON REQUEST

This decision is in response to applicants' "Renewed Petition and Request to Correct Inventorship Pursuant to 37 CFR 1.497(d)" filed 13 February 2006.

BACKGROUND

On 08 July 2003, applicants filed international application PCT/US03/21493 which claimed a priority date of 11 July 2002. The international application named Naomi Burke Anker; Jeannie M. Arruda; Brian Thomas Campbell; Benito Munoz; Petpiboon Prasit; and Brian A. Stearns as applicants/inventors. Pursuant to 37 CFR 1.495, the deadline for payment of the basic national fee was to expire 30 months from the priority date, 11 January 2005.

On 10 January 2005, applicants filed a transmittal letter for entry into the national stage accompanied by, *inter alia:* the requisite basic national fee; a copy of the international application; and a preliminary amendment.

On 24 June 2005, the United Stated Designated/Elected Office mailed a Notification of Missing Requirements (Form PCT/DO/EO/905) indicating that an oath or declaration in compliance with 37 CFR 1.497(a) and (b) must be filed. The notification set a two-month time limit in which to respond.

On 28 November 2005, applicants filed a Petition under 37 CFR 1.497(d) and a declaration executed by: Naomi Burke Anker; Jeannie M. Arruda; Brian Thomas Campbell; Benito Munoz; Petpiboon Prasit; Brian A. Stearns and Tao Hu. In a decision dated 24 January 2006, applicants' request under 37 CFR 1.497(d) was refused.

On 13 February 2006, applicants filed "Renewed Petition and Request to Correct Inventorship Pursuant to 37 CFR 1.497(d)."

DISCUSSION

In the instant case, the international application named Naomi Burke Anker; Jeannie M. Arruda; Brian Thomas Campbell; Benito Munoz; Petpiboon Prasit; and Brian A. Stearns as applicants/inventors. Applicants request to add Tao Hu as an applicant/inventor. In order to correct an error in naming the inventor(s) made during the international stage in the national stage, a submission under 37 CFR 1.497(d) is required.

A submission under 37 CFR 1.497(d) to correct an error in naming inventorship requires: (1) a statement from each person being added or deleted as an inventor that the error in inventorship occurred without any deceptive intention on his or her part; (2) an oath or declaration by the actual inventor(s) as required by 37 CFR 1.497(a); (3) the fee set forth in 37 CFR 1.17; and (4) if an assignment has been executed by any of the original named inventors, the written consent of the assignee in compliance with 37 CFR 3.73(b).

Applicants have satisfied items (1); (2); (3) and (4).

CONCLUSION

The renewed request under 37 CFR 1.497(d) is **GRANTED**.

A review of the application papers reveals that applicants have completed all the requirements of 35 U.S.C. 371 for entry into the national stage. This application will be given an international application filing date of 08 July 2003 and a date of **28 November 2005** under 35 U.S.C. 371.

The application is being returned to the United States Designated/Elected Office for further processing in accordance with this decision.

Anthony Smith
Attorney-Advisor
Office of PCT Legal Administration
Tel: (571) 272-3298
Fax: (571) 273-0459

UNITED STATES PATENT AND TRADEMARK OFFICE

Commissioner for Patents
United States Patent and Trademark Office
P.O. Box 1450
Alexandria, VA 22313-1450
www.uspto.gov

FOLEY HOAG, LLP
PATENT GROUP, WORLD TRADE CENTER WEST
155 SEAPORT BLVD
BOSTON, MA 02110

MAILED

JUN 01 2010

OFFICE OF PETITIONS

In re Application of	:	
Peter H. Seeberger, et al.	:	
Application No. 10/520,963	:	DECISION GRANTING PETITION
Filed: August 26, 2005	:	UNDER 37 CFR 1.313(c)(2)
Attorney Docket No. MTV-005.01	:	

This is a decision on the petition under 37 CFR 1.313(c)(2), filed May 27, 2010, to withdraw the above-identified application from issue after payment of the issue fee.

The petition is **GRANTED**.

The above-identified application is withdrawn from issue for consideration of a submission under 37 CFR 1.114 (request for continued examination). *See* 37 CFR 1.313(c)(2).

Petitioner is advised that the issue fee paid on May 13, 2010 cannot be refunded. If, however, this application is again allowed, petitioner may request that it be applied towards the issue fee required by the new Notice of Allowance.[1]

Telephone inquiries regarding this decision should be directed to undersigned at (571) 272-1642. All other inquiries concerning the examination or status of this application should be directed to the Technology Center.

This application is being referred to Technology Center AU 1623 for processing of the request for continued examination under 37 CFR 1.114 and for consideration of the concurrently filed information disclosure statement.

/AMW/
April M. Wise
Petitions Examiner
Office of Petitions

---

[1] *The request to apply the issue fee to the new Notice may be satisfied by completing and returning the new Part B – Fee(s) Transmittal Form (along with any balance due at the time of submission). Petitioner is advised that the Issue Fee Transmittal Form must be completed and timely submitted to avoid abandonment of the application.*

UNITED STATES PATENT AND TRADEMARK OFFICE

Commissioner for Patents
United States Patent and Trademark Office
P.O. Box 1450
Alexandria, VA 22313-1450
www.uspto.gov

DARBY & DARBY P.C.
P.O. BOX 5257
NEW YORK, NY 10150-5257

COPY MAILED

JUL 06 2006

OFFICE OF PETITIONS

In re Application of :
Hiroaki Kikuchi et al :
Application No. 10/520,968 : ON PETITION
Filed: January 10, 2005 :
Attorney Docket No. 09852/0202320-US0

This is a decision on the petition filed, June 28, 2006 under 37 CFR 1.313(c)(2) to withdraw the above-identified application from issue after payment of the issue fee.

The petition is **GRANTED**.

The above-identified application is withdrawn from issue for consideration of a submission under 37 CFR 1.114 (request for continued examination). See 37 CFR 1.313(c)(2).

Petitioner is advised that the issue fee paid on June 6, 2006 in the above-identified application cannot be refunded. If, however, the above-identified application is again allowed, petitioner may request that it be applied towards the issue fee required by the new Notice of Allowance.[1]

Telephone inquiries should be directed to Irvin Dingle at (571) 272-3210.

This matter is being referred to Technology Center AU 3726 for processing of the request for continued examination under 37 CFR 1.114 and for consideration of the concurrently filed Information Disclosure Statement.

Irvin Dingle
Petitions Examiner
Office of Petitions

---

[1] The request to apply the issue fee to the new Notice may be satisfied by completing and returning the new Issue Fee Transmittal Form PTOL-85(b), which includes the following language thereon: Commissioner for Patents is requested to apply the Issue Fee and Publication Fee (if any) or re-apply any previously paid issue fee to the application identified above. Petitioner is advised that, whether a fee is indicated as being due or not, the Issue Fee Transmittal Form **must** be completed and timely submitted to avoid abandonment. Note the language in bold text on the first page of the Notice of Allowance and Fee(s) Due (PTOL-85).

25 FEB 2005

A3

UNITED STATES PATENT AND TRADEMARK OFFICE

Commissioner for Patents
United States Patent and Trademark Office
P.O. Box 1450
Alexandria, VA 22313-1450
www.uspto.gov

Carolyn A. Bates
Office of Intellectual Property Counsel
3M Innovative Properties Company
P.O. Box 33427
St. Paul, Minnesota 55133-3427

In re Application of	:	
HUDD, et al.	:	DECISION ON PETITION
Application No.: 10/520,977	:	
Filing Date: 11 January 2005	:	UNDER 37 CFR 1.137(b)
Atty. Docket No.: 56266US009	:	
For: INKJET MAINTENANCE KIT	:	

The petition to revive under 37 CFR 1.137(b) filed 11 January 2005 in the above-captioned application is hereby **GRANTED** as follows:

Applicant's statement that "the entire delay in filing the required reply from the due date for the required reply until the filing of a grantable petition under 37 CFR 1.137(b) was unintentional" and the prompt filing of the petition satisfies the requirement of 37 CFR 1.137(b)(3).

A review of the application file reveals that applicant has now provided payment of the full, U.S. Basic National Fee. Therefore, the request to revive the application abandoned under 35 U.S.C. 371(d) is granted as to the National stage in the United States of America. Further, a review of the application file reveals that all of the requirements of 35 U.S.C. 371 for entry into the national stage in the United States have been satisfied.

The application has an international filing date of 16 May 2002 under 35 U.S.C. 363 and will be given a date of **11 January 2005** under 35 U.S.C. 371(c)(1), (c)(2) and (c)(4).

This application is being returned to the United States Designated/Elected Office (DO/EO/US) for treatment in accordance with this decision.

Derek A. Putonen
Attorney Advisor
Office of PCT Legal Administration
Tel: (571) 272-3294
Fax: (571) 273-0459

28 FEB 2006

UNITED STATES PATENT AND TRADEMARK OFFICE

Commissioner for Patents
United States Patent and Trademark Office
P.O. Box 1450
Alexandria, VA 22313-1450
www.uspto.gov

Morgan, Lewis & Bockius, LLP
1111 Pennsylvania Avenue, N.W.
Washington, D.C. 20004

In re Application of	:	
HUDD	:	
Application No.: 10/520,977	:	
PCT No.: PCT/US02/15774	:	SUPPLEMENTAL
Int. Filing Date: 16 May 2002	:	
Priority Date: 30 May 2001	:	DECISION
Attorney Docket No.: 056222-5085-US	:	
For: INKJET MAINTENANCE KIT	:	

This decision supplements the decision in this application mailed 25 February 2005.

BACKGROUND

On 11 January 2005, applicant filed a petition to revive the present application.

On 25 February 2005, applicant was mailed a decision granting applicant's petition.

On 23 May 2005, applicant was mailed a "Notification of Acceptance" (Form PCT/DO/EO/903).

DISCUSSION

Upon further review of the facts of the abandonment it has been determined that the Office erred in initially granting applicant's petition.

As detailed in the decision mailed 25 February 2005, under 37 CFR 1.137(b), a petition requesting that an application be revived on the grounds of unintentional abandonment must be accompanied by: (1) the required reply unless previously filed, (2) the petition fee as set forth in 37 CFR 1.17(m), (3) a statement that the entire delay in filing the required reply from the due date for the reply until the filing of a grantable petition was unintentional, and (4) a terminal disclaimer if the application was filed before 08 June 1995.

Applicant previously satisfied items (1), (2), and (4) above.

With regard to item (3), the petition states that the present application was unintentionally abandoned due to a docketing error.

MPEP 711.03(c), Section II. E. states in relevant part,

> The question under 37 CFR 1.137 is whether the delay on the part of the party having the right or authority to reply to avoid abandonment (or not reply) was unavoidable or unintentional. When the applicant assigns the entire right, title, and interest in an invention to a third party (and thus does not retain any legal or equitable interest in the invention), the applicant's delay is irrelevant in evaluating whether the delay was unavoidable or even unintentional. See *Kim v. Quigg*, 718 F. Supp. 1280, 1284, 12 USPQ2d 1604, 1607-08 (E.D. Va. 1989). When an applicant assigns the application to a third party (e.g., the inventor/applicant's employer), and the third party decides not to file a reply to avoid abandonment, the applicant's actions, inactions or intentions are irrelevant under 37 CFR 1.137, unless the third party has reassigned the application to the applicant prior to the due date for the reply. *Id.*

In the present case, the inventors Alan Hudd and Philip Bentley assigned the entire right, title, and interest in the present application to 3M Innovative Properties Company ("3M"). Furthermore, the "Sponsored Development Agreement"[1] between 3M and Xennia Technology Limited ("Xennia") states that Xennia assigns all right, title, and interest in the invention to 3M. Moreover, the "Sponsored Development Agreement" states that 3M shall have the exclusive right to file, prosecute, issue, maintain, license, enforce, and defend the present patent application and patents derived therefrom. An assignment of the entire right, title, and interest passes both legal and equitable title. *Wende v. Horine*, 191 F. 620, 621 (C.C.N.D. Ill. 1911). Therefore, having been assigned the entire right, title, and interest in the present application by virtue of the recorded assignment agreement and/or the "Sponsored Development Agreement", 3M is the party which had legal and equitable title to the invention from the assignment date until at least 30 November 2003. Thus, 3M had sole authority to reply in order to avoid abandonment.

The petition states that 3M had an obligation to notify Xennia of any intent to abandon the application and that 3M agreed to take no action to abandon the application for a specified period. However, even if 3M breached any duties set forth in its contract with Xennia, 3M retained legal and equitable title to the present invention. See *Wende*. A reversionary interest exists only if there is a conveyance of less than the entire interest. *Kim*, 718 F. Supp. at 1283. Moreover, even if an assignment agreement provides for the possibility of reassignment back to the assignor, the assignor does not retain any reversionary interest in the invention. See *Kim* at 1283. Thus, even though the "Sponsored Development Agreement" provided for the possibility of reassignment back to Xennia, because the entire right, title, and interest in the present invention had been assigned to 3M, neither the inventors nor Xennia retained any reversionary interest. Applicant has not made any showing that 3M surrendered or transferred title to the present invention back to the inventors, Xennia, or any other party before the present application became abandoned.

MPEP 711.03(c), Section II. C. 1. states in relevant part,

---

[1] It is noted that transfer or assignment of the present invention from the inventors to Xennia has not been established.

> Where the applicant deliberately permits an application to become abandoned (e.g., due to a conclusion that the claims are unpatentable, that a rejection in an Office action cannot be overcome, or that the invention lacks sufficient commercial value to justify continued prosecution), the abandonment of such application is considered to be a deliberately chosen course of action, and the resulting delay cannot be considered as "unintentional" within the meaning of 37 CFR 1.137(b). See *In re Application of G*, 11 USPQ2d 1378, 1380 (Comm'r Pat. 1989). An intentional course of action is not rendered unintentional when, upon reconsideration, the applicant changes his or her mind as to the course of action that should have been taken. See *In re Maldague*, 10 USPQ2d 1477, 1478 (Comm'r Pat. 1988).

In the present case, the evidence shows that the party having the sole right to reply in order to avoid abandonment (i.e. 3M) deliberately permitted the present application to become abandoned. The 11 January 2005 petition states, "On September 22, 2003, the business unit responsible for the PCT patent application decided to discontinue prosecution of the patent application." Furthermore, "On October 28, 2003, the docketing clerk mailed a letter to 3M's prosecuting attorney of the PCT patent application at Vossius & Partner, located in Germany, communicating that 3M decided to discontinue prosecution of the PCT patent application referenced above." Thus, 3M's deliberate decision to abandon the present application has been clearly established. An intentional abandonment of an application precludes a finding of unintentional delay pursuant to 37 CFR 1.137(b). See *Maldague.*

CONCLUSION

For the reasons above, the petition under 37 CFR 1.137(b) is **DISMISSED** without prejudice. This application is abandoned as to the National stage in the United States of America.

The decision mailed 25 February 2005 is hereby **VACATED**.

The "Notification of Acceptance" (Form PCT/DO/EO/903) mailed 23 May 2005 is hereby **VACATED**.

If reconsideration on the merits of the petition is desired, a proper response must be filed within **TWO (2) MONTHS** from the mail date of this decision. Extensions of time are available under 37 CFR 1.136 pursuant to 37 CFR 1.137(e)(1). Any reconsideration request should include a cover letter entitled "Renewed Petition Under 37 CFR 1.137(b)".

Please direct further correspondence with respect to this matter to Mail Stop PCT, Commissioner for Patents, Office of PCT Legal Administration, P.O. Box 1450, Alexandria, Virginia 22313-1450, with the contents of the letter marked to the attention of the Office of PCT Legal Administration.

Derek A. Putonen
Attorney Advisor
Office of PCT Legal Administration
Tel: (571) 272-3294
Fax: (571) 273-0459

UNITED STATES PATENT AND TRADEMARK OFFICE

Commissioner for Patents
United States Patent and Trademark Office
P.O. Box 1450
Alexandria, VA 22313-1450
www.uspto.gov

22 DEC 2006

Morgan, Lewis & Bockius, LLP
1111 Pennsylvania Avenue, N.W.
Washington, D.C. 20004

In re Application of	:	
HUDD et al.	:	
Application No.: 10/520,977	:	DECISION ON RENEWED
PCT No.: PCT/US02/15774	:	
Int. Filing Date: 16 May 2002	:	PETITION UNDER
Priority Date: 30 May 2001	:	
Attorney Docket No.: 056222-5085-US	:	37 CFR 1.137(b)
For: INKJET MAINTENANCE KIT	:	

This decision is in response to applicant's "Renewed Petition Under 37 C.F.R. § 1.137(b)" filed 27 April 2006 in the United States Patent and Trademark Office (USPTO).

BACKGROUND

Pursuant to 37 CFR 1.495(b), the present application became abandoned on 1 December 2003 for failure to timely submit the basis national fee.

On 11 January 2005, applicants filed a petition under 37 CFR 1.137(b) to revive the instant application.

On 28 February 2006, applicant was mailed a supplemental decision dismissing applicant's petition to revive pursuant to 37 CFR 1.137(b). Applicant was afforded two months to file any request for reconsideration.

On 27 April 2006, applicant filed the present renewed petition.

DISCUSSION

Petitioner seeks to revive the instant application pursuant to 37 CFR 1.137(b) based on unintentional abandonment. The legislative history of Public Law 97-247, § 3, 96 Stat. 317 (1982), reveals that the purpose of 35 U.S.C. 41(a)(7) is to permit the Office to have more discretion than in 35 U.S.C. 133 or 151 to revive abandoned applications in appropriate circumstances, but places a limit on this discretion stating that [u]nder this section a petition accompanied by [the requisite fee] would not be granted where the abandonment or the failure to pay the fee for issuing the patent was intentional as opposed to being unintentional or unavoidable. H.R. Rep. No. 542, 97th Cong., 2d Sess. 6-7 (1982), *reprinted in* 1982 U.S.C.C.A.N. 770-71. Thus, the Office is foreclosed from granting a petition to revive an application where abandonment of the application was intentional. A delay resulting from a deliberately chosen

course of action on the part of the applicant is not an unintentional delay within the meaning of 37 CFR 1.137(b). See MPEP §711.03(c) at pg 700-191. In determining whether a delay was unintentional, one looks to the delay on the part of the party having the right or authority to reply to avoid abandonment. MPEP §711.03(c), Section II. E. When an applicant assigns the entire right, title, and interest in an invention to another (and thus does not retain any legal or equitable interest in the invention), applicant's delay is irrelevant. *Id.*; also see *Kim v. Quigg*, 718 F. Supp. 1280, 1284, 12 USPQ2d 1604, 1607-08 (E.D. Va. 1989).

The following facts are not in dispute:

1. The Sponsored Development Agreement ("Agreement") between Xennia Technology Limited ("Xennia") and 3M Innovative Properties Company ("3M") calls for the assignment of the invention covered by U.S. application 10/520,977 ('977 application) from Xennia to 3M. (Renewed pet., item (3) of Background).
2. The Agreement provides that "Xennia agrees to assign and hereby assigns all right, title and interest in the ['977 application] to 3M" (¶ 3.1 of Agreement).
3. The Agreement provides that Xennia and its employees, representatives and persons associated with it shall execute all documents necessary to vest in 3M all right, title, and interest in the invention of the '977 application, and that an assignment by the inventors to 3M assigning all such rights was executed by the inventors. (¶ 3.1 of Agreement; assignment recorded at Reel/Frame: 16413/0481).
4. The Agreement states that "...3M IPC shall have the exclusive right at its own expense to file, prosecute, issue, maintain...all patent applications and patents, throughout the world, containing [the instant invention]." (¶ 4.2 of Agreement)
5. In September 2003, 3M decided to abandon the application. (Renewed pet., item (7) of Background).

Applying the undisputed facts to the applicable law, it is clear that 3M's decision to abandon the instant application was intentional and therefore revival is foreclosed.

Petitioner does not dispute that a decision to abandon an application by an assignee, as the owner of all right, title and interest in and to the invention, would be considered intentional. See Renewed Pet at 1st ¶ of "Discussion". Rather, Petitioner argues that in the instant case, 3M's intention to abandon was dependent upon Xennia's approval, and could not be completed without Xennia's consent. However, Petitioner cites to no authority to support this theory of "dependent" or "incomplete" intent. Nor has petitioner cited any authority holding that a decision made by the legal and equitable owner of the invention (i.e., the assignee) to abandon an application can be revived. It is well settled that a mistake or unawareness of an underlying fact leading to an intentional decision to abandon an application does not make the abandonment unintentional. See, e.g., MPEP §711.03(c), II.C:

> *Where the applicant deliberately permits an application to become abandoned (e.g., due to a conclusion that the claims are unpatentable, that a rejection in an Office action cannot be overcome, or that the invention lacks sufficient commercial value to justify continued prosecution), the abandonment of such application is considered to be a deliberately chosen course of action, and the resulting delay*

cannot be considered as "unintentional" within the meaning of 37 CFR 1.137(b). See In re Application of G, 11 USPQ2d 1378, 1380 (Comm'r Pat. 1989). An intentional course of action is not rendered unintentional when, upon reconsideration, the applicant changes his or her mind as to the course of action that should have been taken. See In re Maldague, 10 USPQ2d 1477, 1478 (Comm'r Pat. 1988). A delay resulting from a deliberately chosen course of action on the part of the applicant does not become an "unintentional" delay within the meaning of 37 CFR 1.137(b) because:

(A) the applicant does not consider the claims to be patentable over the references relied upon in an outstanding Office action;

(B) the applicant does not consider the allowed or patentable claims to be of sufficient breadth or scope to justify the financial expense of obtaining a patent;

(C) the applicant does not consider any patent to be of sufficient value to justify the financial expense of obtaining the patent;

(D) the applicant does not consider any patent to be of sufficient value to maintain an interest in obtaining the patent; or

(E) the applicant remains interested in eventually obtaining a patent, but simply seeks to defer patent fees and patent prosecution expenses.

See also *Field Hybrids, LLC. v. Toyota Motor Corp.*, 2005 U.S.Dist. LEXIS 1159 (D. Mn 2005)("Plaintiff also argues it had no intention of abandoning the 288 Application, and would have chosen a different course of action had it been aware of the potential abandonment. As the MPEP makes clear, this is not a valid consideration in determining whether a delay is unintentional. The inquiry is directed only to whether the course of action resulting in the delay was intentional.").

Petitioner also argues that 3M did not have the right to prosecute (or not prosecute) the application to avoid abandonment. Petitioner is confusing 3M's contractual obligation to notify Xennia pursuant to ¶ 4.4 of the Agreement with 3M's right, as assignee of all rights in the invention, to control prosecution. Absent reassignment of the invention back to Xennia, Xennia could not establish a right to take action in the present application. See 37 CFR 3.73(b). Furthermore, Petitioner's argument is inconsistent with ¶. 4.2 of the Agreement, which states: "...**3M IPC shall have the exclusive right** at its own expense to file, **prosecute**, issue, maintain...all patent applications and patents...". As further provided in ¶ 4.4 of the Agreement, Xennia's ability to prosecute the application is contingent upon assignment of the invention back to Xennia.

Petitioner attempts to distinguish the instant case from *Kim v. Quigg* by asserting that Xennia retained a reversionary interest. This argument is not persuasive. A reversionary interest exists only if there is a conveyance of less than the entire interest. *Kim*, 718 F. Supp. at 1283. Here, the Agreement, as well as the assignment executed by the inventors, provide that "all

interest..." in the invention is conveyed to 3M. An agreement that creates the mere possibility that the invention may be reassigned back to the assignor does not create a reversionary interest. See *Kim* at 1283. As in *Kim*, reassignment of the invention back to Xennia was solely at the discretion of 3M. 3M, if it so desired, could have retained exclusive ownership of the invention for the life of any patent covering the invention.

Petitioner's reliance on *Futures Technology Ltd. V. Quigg,* 684 F. Supp 430 (E.D. Va. 1988) is misplaced. In *Futures*, the plaintiff was held to be the equitable owner of the invention. Here, Xennia retained neither legal nor equitable ownership in the invention.

Finally, it is noted that the record fails to establish when Xennia became aware of the abandonment. See, e.g., *Fields*, *supra*, finding purposeful delay where an applicant files a petition to revive under 37 CFR 1.137(b) in January after learning of abandonment late in the proceeding year.

CONCLUSION

For the reasons above, the renewed petition under 37 CFR 1.137(b) is **DISMISSED**. This application remains abandoned as to the National stage in the United States of America.

If reconsideration on the merits of the petition is desired, a proper response must be filed within **TWO (2) MONTHS** from the mail date of this decision. Extensions of time are available under 37 CFR 1.136 pursuant to 37 CFR 1.137(e)(1). Any reconsideration request should include a cover letter entitled "Renewed Petition Under 37 CFR 1.137(b)".

Please direct further correspondence with respect to this matter to Mail Stop PCT, Commissioner for Patents, Office of PCT Legal Administration, P.O. Box 1450, Alexandria, Virginia 22313-1450, with the contents of the letter marked to the attention of the Office of PCT Legal Administration.

Derek A. Putonen
Attorney Advisor
Office of PCT Legal Administration
Tel: (571) 272-3294
Fax: (571) 273-0459

UNITED STATES PATENT AND TRADEMARK OFFICE

UNITED STATES DEPARTMENT OF COMMERCE
United States Patent and Trademark Office
Address: COMMISSIONER FOR PATENTS
P.O. Box 1450
Alexandria, Virginia 22313-1450
www.uspto.gov

David W Hightet
Becton Dickinson and Company
1 Becton Drive-MC 110
Franklin Lakes, NJ 07417

Mail Date: 04/21/2010

Applicant	: Lionel Vedrine	: DECISION ON REQUEST FOR
Patent Number	: 7618401	: RECALCULATION of PATENT
Issue Date	: 11/17/2009	: TERM ADJUSTMENT IN VIEW
Appliction No	: 10/520,981	: OF WYETH AND NOTICE OF INTENT TO
Filed	: 08/29/2005	: ISSUE CERTIFICATE OF CORRECTION
		:

The Request for Recalculation is **GRANTED** to the extent indicated.

The patent term adjustment has been determined to be **101** days. The USPTO will *sua sponte* issue a certificate of correction reflecting the amount of PTA days determined by the recalculation.

Prior to the issuance of the certificate of correction, the USPTO will afford patentee an opportunity to be heard and request reconsideration. Accordingly, patentee has **one month or thirty (30) days**, whichever is longer, to file a request for reconsideration of this patent term adjustment calculation. See 35 U.S.C. 154(b)(3)(B)(ii) and 37 CFR 1.322(a)(4). No extensions of time will be granted under 37 CFR 1.136.

Patentee should use document code PET.OP if electronically filing a request for reconsideration of this patent term adjustment calculation. The patentee must also include the information required by 37 CFR 1.705(b)(2) and the fee required by 37 CFR 1.18(e). If patentee does not file a timely request for reconsideration of this patent term adjustment calculation including the information required by 37 CFR 1.705(b)(2) and the fee required by 37 CFR 1.18(e), the USPTO will issue a certificate of correction reflecting the PTA determination noted above.

Patentee should be aware that in order to preserve the right to review in the United States District Court for the District of Columbia of the USPTO patent term adjustment determination, patentee must ensure that he or she also take the steps required under 35 U.S.C. 154(b)(4)(A) in a timely manner. Nothing in the request for recalculation should be construed as providing an alternative time frame for commencing a civil action under 35 U.S.C. 154(b)(4)(A).

Any questions concerning this decision should be directed to the Office of Patent Legal Administration at 571-272-7702.

08 SEP 2006

United States Patent and Trademark Office

08 SEP 2006

Commissioner for Patents
United States Patent and Trademark Office
P.O. Box 1450
Alexandria, VA 22313-1450
www.uspto.gov

Stephen J. Rosenman
Seed Intellectual Property Law Group
701 5th Avenue
Suite 6300
Seattle WA 98104-7092

In re Application of	:	
Gilbert et al.	:	
Application No. 10/520,986	:	
PCT No.: PCT/GB03/02962	:	
Int. Filing Date: 09 July 2003	:	DECISION
Priority Date: 10 July 2002	:	
Atty. Docket No.: 310134.402USPC	:	
For: Molecular Detector Arrangement	:	

This is in response to the "Petition To Accord A Filing Date" filed on 25 July 2006.

DISCUSSION

In a Notification mailed on 30 June 2006, the correspondence filed on 02 June 2006 was treated as follows:

> The instant correspondence urges that "a copy of the Response as filed on July 27, 2005" be accepted on the basis of return postcard receipt evidence. However, the instant correspondence has not been signed by a registered patent attorney or agent. Further, it appears to have been prepared and signed by "Rosie Price, Legal Assistant to Stephen J. Rosenman, Ph.D." It would not be appropriate to consider the merits of this correspondence (which is in effect a petition to accord a filing date to the "copy of the Response as filed on July 27, 2005") in the absence of the signature of a registered practitioner.

The instant petition is signed by a registered practitioner, who cites an accompanying copy of a return postcard receipt. Said postcard receipt is stamped as "Rec'd PCT/PTO 27 JUL 2005" and itemizes the following:

> Check; Transmittal Letter (3 pages + copy); Declaration for Utility or Design Application Using an Application Data Sheet (1 page); Election and Power of Attorney; Statement under 37 C.F.R. § 3.73(b); Form PTO-1595; Assignment (3 pages); Information Disclosure Statement, Form PCT-1449 (1 page); Copies of Cited References (11); and Copy of Notification of Missing Requirements (PCT/DO/EO/905)

The petition is accompanied by copies of a Transmittal Letter, a Declaration, an "Election and Power of Attorney," a statement under 37 CFR 3.73(b), an assignment, an IDS (Form PTO-1449) and 11 prior art references. Petitioner states that, inter alia, the stamped postcard receipt and the "Response to Notification of Missing Requirements are true copies." MPEP 503 states in part that "A postcard receipt which itemizes and properly identifies the papers which are being filed serves as *prima facie* evidence of receipt in the PTO of all the items listed thereon on the

date stamped thereon by the PTO." Following that practice, the itemized correspondence (including *inter alia* the declaration) is regarded as a copy of the correspondence originally filed on 27 July 2005. Since said correspondence included an executed declaration (in response to the requirement set by the Form PCT/DO/EO/905 mailed on 12 July 2005), the holding of abandonment is hereby **WITHDRAWN**.

Inspection of the 25 July 2006 copy of the declaration originally filed on 27 July 2005 reveals that it names "Xiao-Feng ZHOU" as the second inventor, while the published international application nominates "XHOU, Xiao-Feng." It is not clear from the record whether this discrepancy arose from a mere typographic error or phonetic misspelling of applicant's name or, alternatively, whether it reflects a substantive change in the name or identity of the inventor. If the latter case obtains, a proper petition and fee under 37 CFR 1.182 would be required to resolve this matter. *See* MPEP § 605.04(b) and MPEP § 201.03(b). In the absence of an acceptable petition and/or statement addressing this discrepancy, or alternatively a newly executed declaration naming the same inventive entity as nominated in the published international application, it would not be appropriate to accept the declaration under 37 CFR 1.497(a) and (b) at this time.

CONCLUSION

The petition is **GRANTED** to the extent described above.

Applicants have **ONE (1) MONTH** to file a proper response addressing the discrepancy in the declaration described above. Extensions of time under 37 CFR 1.136(a) are **NOT** available. Failure to file a timely response will result in **ABANDONMENT**.

Any further correspondence with respect to this matter should be addressed to the Assistant Commissioner for Patents, Mail Stop PCT, P.O. Box 1450, Alexandria, VA 22313-1450, with the contents of the letter marked to the attention of the PCT Legal Office.

Daniel Stemmer
PCT Legal Examiner
Office of PCT Legal Administration

George M. Dombroske
PCT Legal Examiner
Office of PCT Legal Administration
Tel: (571) 272-3283
Fax: (571) 273-0459

28 JUL 2005

#6

UNITED STATES PATENT AND TRADEMARK OFFICE

COMMISSIONER FOR PATENTS
UNITED STATES PATENT AND TRADEMARK OFFICE
P.O. BOX 1450
ALEXANDRIA, VA 22313-1450
www.uspto.gov

TECHNOPROP COLTON LLC
P O BOX 567685
ATLANTA, GA 31156

In re Application of	:	
FOCKE, Heinz et al.	:	
Application No.: 10/521,000	:	DECISION ON
PCT No.: PCT/EP03/08029	:	
Int. Filing Date: 23 July 2003	:	REQUEST
Priority Date: 31 July 2002	:	
Attorney's Docket No.: 20605.018US	:	UNDER 37 CFR 1.42
For: FOLDING PACKET	:	

This application is before the Office of PCT Legal Administration for matters arising under 35 USC 371. A review of the declaration reveals an indication that joint inventor Heinz Focke is deceased. Applicants' submission has been treated as a request for status under 37 CFR 1.42.

BACKGROUND

On 07 January 2005, applicants filed international application PCT/EP03/08029, which claimed a priority date of 31 July 2002. A copy of the international application was transmitted to the Office by the International Bureau on 12 February 2004. The deadline for entry into the national stage in the United States was 31 January 2005.

On 07 January 2005, applicants filed a submission for entry into the national stage in the United States which was accompanied by, *inter alia*, the U.S. Basic National Fee.

On 27 June 2005, the Office mailed Notification of Missing Requirements (Form PCT/DO/EO/905) indicating that an oath or declaration in compliance with 37 CFR 1.497(a)-(b) was required.

On 05 July 2005, applicants submitted a declaration executed by two inventors and two heirs of deceased inventor Focke.

DISCUSSION

Under 35 U.S.C. §117, legal representatives of deceased inventors may make application for patent upon compliance with the requirements and on the same terms and conditions applicable to the inventor. The "legal representative (executor, administrator, etc.) of the deceased inventor may make the necessary oath or declaration, and apply for and obtain the patent." 37 CFR 1.42.

The declaration is executed by Jürgen Focke and Doris Focke. The declaration provided does not state that the heirs are the sole heirs of Heinz Focke. If a legal representative has been or is required to be appointed under applicable law, such person must sign the declaration and indicate the relationship, e.g., "legal representative of inventor Heinz Focke." Otherwise, <u>all</u> heirs of Heinz Focke must sign the declaration and indicate the relationship, *e.g.*, "all heirs of Heinz Focke" or "legal representative of Heinz Focke." The indication that Jürgen Focke and Doris Focke are heirs leaves open the possibility that there are other non-signing joint heirs.

Additionally, the declaration must list the inventors and their citizenships and the legal representative and the legal representative's citizenship, residence and postal address. See 37 CFR 1.497. The declaration appears to list the information for the heirs and the remaining inventors, but does not list the information for the deceased inventor. As such, it does not satisfy 37 CFR 1.497(a)-(b).

CONCLUSION

For the above reasons, the request for status under 37 CFR 1.42 is **REFUSED**.

Applicant is required to submit a declaration in compliance with 37 CFR 1.497 and 1.42 within a time period of **TWO (2) MONTHS** from the mail date of this Decision. THIS PERIOD FOR RESPONSE MAY BE EXTENDED UNDER 37 CFR 1.136(a). FAILURE TO PROPERLY RESPOND WILL RESULT IN ABANDONMENT. Any request for reconsideration of this decision should include a cover letter entitled "Renewed Submission Under 37 CFR 1.42."

Any further correspondence with respect to this matter should be addressed to the Mail Stop PCT, Commissioner for Patents, Office of PCT Legal Administration, P.O. Box 1450, Alexandria, Virginia 22313-1450, with the contents of the letter marked to the attention of the Office of PCT Legal Administration.

Erin P. Thomson

Erin P. Thomson
Attorney Advisor
PCT Legal Administration

Telephone: (571) 272-3292
Facsimile: (571) 273-0459

09 NOV 2005

#8

UNITED STATES PATENT AND TRADEMARK OFFICE

Commissioner for Patents
United States Patent and Trademark Office
P.O. Box 1450
Alexandria, VA 22313-1450
www.uspto.gov

TECHNOPROP COLTON LLC
P O BOX 567685
ATLANTA, GA 31156

In re Application of	:	
FOCKE, Heinz et al.	:	
Application No.: 10/521,000	:	DECISION ON
PCT No.: PCT/EP03/08029	:	
Int. Filing Date: 23 July 2003	:	REQUEST
Priority Date: 31 July 2002	:	
Attorney's Docket No.: 20605.018US	:	UNDER 37 CFR 1.42
For: FOLDING PACKET	:	

This is a decision on "Renewed Submission Under 37 CFR 1.42," filed in the United States Patent and Trademark Office on 28 October 2005 and a supplemental submission on 03 November 2005.

BACKGROUND

On 07 January 2005, applicants filed international application PCT/EP03/08029, which claimed a priority date of 31 July 2002. A copy of the international application was transmitted to the Office by the International Bureau on 12 February 2004. The deadline for entry into the national stage in the United States was 31 January 2005.

On 07 January 2005, applicants filed a submission for entry into the national stage in the United States which was accompanied by, *inter alia*, the U.S. Basic National Fee.

On 27 June 2005, the Office mailed Notification of Missing Requirements (Form PCT/DO/EO/905) indicating that an oath or declaration in compliance with 37 CFR 1.497(a)-(b) was required.

On 05 July 2005, applicants submitted a declaration executed by two inventors and two heirs of deceased inventor Focke.

On 28 July 2005, the Office mailed Decision On Request Under 37 CFR 1.42, refusing applicants' request.

On 28 October 2005, applicants submitted a renewed request under 37 CFR 1.42 and the fee for a one month extension of time.

On 03 November 2005, applicants submitted a second copy of the declaration of the inventors. This copy is fully legible.

DISCUSSION

Under 35 U.S.C. §117, legal representatives of deceased inventors may make application for patent upon compliance with the requirements and on the same terms and conditions applicable to the inventor.

The "legal representative (executor, administrator, etc.) of the deceased inventor may make the necessary oath or declaration, and apply for and obtain the patent." 37 CFR 1.42.

The 03 November 2005 declaration complies with 37 CFR 1.497(a)-(b) and 37 CFR 1.42. The declaration lists the inventors and their citizenships and the legal representatives and the legal representatives' citizenships, residences and postal addresses. See 37 CFR 1.497.

CONCLUSION

For the above reasons, the request for status under 37 CFR 1.42 is **GRANTED**.

The application has a date of 03 November 2005 under 35 U.S.C. §371(c)(1), (c)(2) and (c)(4). This application is being forwarded to the National Stage Processing Division of the Office of the PCT Operations for continued processing.

Erin P. Thomson

Erin P. Thomson
Attorney Advisor
PCT Legal Administration

Telephone: (571) 272-3292
Facsimile: (571) 273-0459

UNITED STATES PATENT AND TRADEMARK OFFICE

Commissioner for Patents
United States Patent and Trademark Office
P.O. Box 1450
Alexandria, VA 22313-1450
www.uspto.gov

HUGH R. KRESS
BROWNING BUSHMAN P.C.
5718 WESTHEIMER, SUITE 1800
HOUSTON, TX 77057

COPY MAILED

FEB 0 2 2007

OFFICE OF PETITIONS

In re Application of	:	
Wiederrecht, Jean-Marc	:	
Application No. 10/521,037	:	ON PETITION
Filed: January 10, 2005	:	
Attorney Docket No. GLN-056	:	

This is a decision on the petition under 37 C.F.R. § 1.137(b), filed December 8, 2006, to revive the above-identified application.

The petition is **GRANTED.**

The petition satisfies the conditions for revival pursuant to the provisions of 37 CFR 1.137(b) in that (1) the reply in the form of an Amendment; (2) the petition fee; and (3) the required statement of unintentional delay have been received. Accordingly, the response has been accepted as having been unintentionally delayed.

This matter is being referred to Technology Center 3600 for further examination on the merits.

Telephone inquiries regarding this decision should be directed to the undersigned at (571) 272-3206.

Liana Walsh
Petitions Examiner
Office of Petitions

01 JUL 2005

#4

UNITED STATES PATENT AND TRADEMARK OFFICE

COMMISSIONER FOR PATENTS
UNITED STATES PATENT AND TRADEMARK OFFICE
P.O. BOX 1450
ALEXANDRIA, VA 22313-1450
www.uspto.gov

Jonathan Spangler
2875 Kalmia Place
San Diego, CA 92104

In re Application of: ABOUL-HOSN, Walid U.S. Application No.: 10/521,044 PCT No.: PCT/US03/18638 International Filing Date: 11 June 2003 Priority Date: 11 June 2002 Attorney's Docket No.: OMA003-US1 For: PERCUTANEOUSLY INTRODUCED BLOOD PUMP AND RELATED METHODS	DECISION ON PETITION FOR REVIVAL OF ABANDONED APPLICATION UNDER 37 CFR 1.137(b)

The petition for revival under 37 CFR 1.137(b) filed 11 January 2005 in the above-captioned application is hereby **GRANTED** as follows:

Applicants' statement that "the entire delay in filing the required reply from the due date for the required reply until the filing of a grantable petition under 37 CFR 1.137(b) was unintentional" meets the requirements of 37 CFR 1.137(b)(3).

Applicants have now submitted the small entity basic national fee and the requirements of 37 CFR 1.137(b) have been satisfied. Therefore, the request to revive the application is granted as to the national stage in the United States of America.

This application is being returned to the National Stage Processing Division of the Office of PCT Operations for further processing in accordance with this decision, including the issuance of a "Notification Of Missing Requirements" (Form PCT/DO/EO/905) requiring submission of an executed oath or declaration in compliance with 37 CFR 1.497 and the surcharge for filing this declaration later than thirty months after the priority date.

Richard M. Ross
PCT Petitions Attorney
Office Of PCT Legal Administration
Telephone: (571) 272-3296
Facsimile: (571) 273-0459

UNITED STATES PATENT AND TRADEMARK OFFICE

Commissioner for Patents
United States Patent and Trademark Office
P.O. Box 1450
Alexandria, VA 22313-1450
www.uspto.gov

WORKMAN NYDEGGER
60 EAST SOUTH TEMPLE
1000 EAGLE GATE TOWER
SALT LAKE CITY, UT 84111

COPY MAILED

FEB 15 2008

OFFICE OF PETITIONS

In re Application of	:	
Walid Nagib Aboul-Hosn	:	
Application No. 10/521,044	:	DECISION GRANTING PETITION
Filed: January 11, 2005	:	UNDER 37 CFR 1.137(b)
Attorney Docket No. OMA003-US1	:	

This is a decision on the petition under 37 CFR 1.137(b), filed September 26, 2007, to revive the above-identified application. This is also a decision on the petition under 37 CFR 1.182, filed February 13, 2008 for a request to expedite.

The petitions are **GRANTED**.

The petition satisfies the conditions for revival pursuant to the provisions of 37 CFR 1.137(b) in that (1) the reply in the form of an amendment; (2) the petition fee; and (3) the required statement of unintentional delay have been received. Accordingly, the reply to the Nonfinal Rejection of January 25, 2007, is accepted as having been unintentionally delayed.

A corrected decision granting the Power of Attorney filed September 26, 2007 is attached.

Telephone inquiries concerning this decision should be directed to the undersigned at (571) 272-3208.

This matter is being referred to Technology Center AU 3762.

Karen Creasy

Karen Creasy
Petitions Examiner
Office of Petitions

UNITED STATES PATENT AND TRADEMARK OFFICE

UNITED STATES DEPARTMENT OF COMMERCE
United States Patent and Trademark Office
Address: COMMISSIONER FOR PATENTS
P.O. Box 1450
Alexandria, Virginia 22313-1450
www.uspto.gov

APPLICATION NUMBER	FILING OR 371(C) DATE	FIRST NAMED APPLICANT	ATTY. DOCKET NO./TITLE
10/521,044	12/07/2005	Walid Nagib Aboul-Hosn	OMA003-US1

CONFIRMATION NO. 6603

POA ACCEPTANCE LETTER

22913
WORKMAN NYDEGGER
60 EAST SOUTH TEMPLE
1000 EAGLE GATE TOWER
SALT LAKE CITY, UT 84111

OC000000028318823

Date Mailed: 02/14/2008

NOTICE OF ACCEPTANCE OF POWER OF ATTORNEY

This is in response to the Power of Attorney filed 09/26/2007.

The Power of Attorney in this application is accepted. Correspondence in this application will be mailed to the above address as provided by 37 CFR 1.33.

/kocreasy/

Office of Initial Patent Examination (571) 272-4000 or 1-800-PTO-9199

UNITED STATES PATENT AND TRADEMARK OFFICE

UNITED STATES DEPARTMENT OF COMMERCE
United States Patent and Trademark Office
Address: COMMISSIONER FOR PATENTS
P.O. Box 1450
Alexandria, Virginia 22313-1450
www.uspto.gov

William S Frommer
Frommer Lawrence & Haug
745 Fifth Avenue
New York, NY 10151

Mail Date: 04/23/2010

Applicant	: Toshichika Urushibara	: DECISION ON REQUEST FOR
Patent Number	: 7613892	: RECALCULATION of PATENT
Issue Date	: 11/03/2009	: TERM ADJUSTMENT IN VIEW
Appliction No	: 10/521,056	: OF WYETH AND NOTICE OF INTENT TO
Filed	: 02/10/2005	: ISSUE CERTIFICATE OF CORRECTION
		:

The Request for Recalculation is **GRANTED** to the extent indicated.

The patent term adjustment has been determined to be **1303** days. The USPTO will *sua sponte* issue a certificate of correction reflecting the amount of PTA days determined by the recalculation.

Prior to the issuance of the certificate of correction, the USPTO will afford patentee an opportunity to be heard and request reconsideration. Accordingly, patentee has **one month or thirty (30) days**, whichever is longer, to file a request for reconsideration of this patent term adjustment calculation. See 35 U.S.C. 154(b)(3)(B)(ii) and 37 CFR 1.322(a)(4). No extensions of time will be granted under 37 CFR 1.136.

Patentee should use document code PET.OP if electronically filing a request for reconsideration of this patent term adjustment calculation. The patentee must also include the information required by 37 CFR 1.705(b)(2) and the fee required by 37 CFR 1.18(e). If patentee does not file a timely request for reconsideration of this patent term adjustment calculation including the information required by 37 CFR 1.705(b)(2) and the fee required by 37 CFR 1.18(e), the USPTO will issue a certificate of correction reflecting the PTA determination noted above.

Patentee should be aware that in order to preserve the right to review in the United States District Court for the District of Columbia of the USPTO patent term adjustment determination, patentee must ensure that he or she also take the steps required under 35 U.S.C. 154(b)(4)(A) in a timely manner. Nothing in the request for recalculation should be construed as providing an alternative time frame for commencing a civil action under 35 U.S.C. 154(b)(4)(A).

Any questions concerning this decision should be directed to the Office of Patent Legal Administration at 571-272-7702.

#8

UNITED STATES PATENT AND TRADEMARK OFFICE

Commissioner for Patents
United States Patent and Trademark Office
P.O. Box 1450
Alexandria, VA 22313-1450
www.uspto.gov

16 AUG 2006

Townsend and Townsend and Crew
Lynn M. Thompson
Two Embarcadero Center, 8th Floor
San Francisco CA 94111-3834

In re Application of LYE et al. Serial No.: 10/521,063 PCT No.: PCT/US03/21611 Int. Filing Date: 11 July 2003 Priority Date: 11 July 2002 Attorney's Docket No.: 021764-000720US For: METHODS AND APPARATUSES FOR REPAIRING ANEURYSMS	DECISION ON SUBMISSION OF DECLARATION

This decision is responsive to Applicant's "Response to the Notification of Defective Response" filed in the United States Patent and Trademark Office (USPTO) on 06 March 2006.

BACKGROUND

On 11 July 2003, applicants filed international application PCT/US03/21611, which claimed priority of an earlier U.S. application filed 11 July 2002. Accordingly, the thirty-month period for paying the basic national fee for the national stage in the United States expired at midnight on 11 January 2005.

On 11 January 2005, applicants filed a transmittal letter for entry into the national stage in the United States. The transmittal letter was accompanied by, *inter alia*, the basic national fee. These papers were assigned Application No. 10/521,063.

On 15 August 2005, a Notification of Missing Requirements was mailed to applicant indicating that the oath or declaration, in compliance with 37 CFR 1.497(a) and (b) and the surcharge for filing the oath or declaration after the thirty month period was required.

On 25 August 2005, applicant filed the response to the Notification of Missing Requirements along with a declaration executed under PCT Rule 4.17. The declaration did not identify the application to which it was directed. The $65 surcharge for filing the declaration after the thirty month period was paid.

On 7 February 2006, a Notification of Defective Response was mailed to applicant indicating that the declaration did not identify the application to which it was directed.

On 6 March 2006, applicant filed the instant petition along with a copy of the earlier filed declaration, which had been altered to identify the U.S. application.

DISCUSSION

The declaration submitted on 25 August 2005 did not identify the application to which it was directed. The Notification of Defective Response issued on 07 February 2006 advised applicant of the deficiency in the declaration.

The declaration submitted on 06 March 2006 is unacceptable because it contains an alteration. The declaration submitted on 06 March 2006 is identical to the declaration submitted on 25 August 2005 with the following alteration: "U.S. App. No. 10/521,063 corr. To PCT/US03/21611 filed 07/11/03". This is not responsive to the Notification of Defective Response.

The USPTO does not accept a declaration that has been altered. Section 602.01 of the MPEP states the following:

> The wording of an oath or declaration cannot be amended, altered or changed in any manner after it has been signed. If the wording is not correct or if all of the required affirmations have not been made, or if it has not been properly subscribed to, a new oath or declaration must be required....

Thus, the declaration is unacceptable and is not a proper response. Furthermore, the time limit under the Notification of Defective Response has expired. The application is abandoned.

CONCLUSION

The declaration of inventors submitted by applicants on 06 March 2006 is unacceptable and is not a proper reply to the Notification of Defective Response.

The application is being forwarded to the United States Designated/Elected Office for issuance of a Notification of Abandonment for failure to file a proper reply to the Notification of Defective Response.

Cynthia M. Kratz

Cynthia M. Kratz
Attorney Advisor
PCT Legal Office

Telephone: (571) 272-3286
Facsimile (571) 273-0459

UNITED STATES PATENT AND TRADEMARK OFFICE

Commissioner for Patents
United States Patent and Trademark Office
P.O. Box 1450
Alexandria, VA 22313-1450
www.uspto.gov

TOWNSEND AND TOWNSEND AND CREW, LLP
TWO EMBARCADERO CENTER
EIGHTH FLOOR
SAN FRANCISCO, CA 94111-3834

COPY MAILED

APR 14 2008

OFFICE OF PETITIONS

In re Application of	:	
LYE, Whye-Kei et al.	:	
Application No. 10/521,063	:	DECISION ON PETITION
Filed: October 16, 2006	:	TO WITHDRAW
Attorney Docket No. **021764-000720US**	:	FROM RECORD
	:	

This is a decision on the Request to Withdraw as attorney or agent of record under 37 C.F.R. § 1.36(b), filed January 24, 2008.

The request is **APPROVED**.

A grantable request to withdraw as attorney/agent of record must be signed by every attorney/agent seeking to withdraw or contain a clear indication that one attorney is signing on behalf of another/others. A request to withdraw will not be approved unless at least 30 (thirty) days would remain between the date of approval and the later of the expiration date of a time to file a response or the expiration date of the maximum time period which can be extended under 37 C.F.R. § 1.136(a).

The request was signed by Mark D. Barrish on behalf of all attorneys of record who are associated with customer No. 20350.. All attorneys/agents associated have been withdrawn. Applicant is reminded that there is no attorney of record at this time.

The request to change the correspondence of record is not acceptable as the requested correspondence address is not that of: (1) the first named signing inventor; or (2) an intervening assignee of the entire interest under 37 C.F.R 3.71. All future communications from the Office will be directed to the first named signing inventor.

There are no outstanding office actions at this time.

Telephone inquiries concerning this decision should be directed to the undersigned at Michelle R. Eason.

Michelle R. Eason
Paralegal Specialist
Office of Petitions

cc: **WHYE-KEI LYE**
1060 RAMBLEWOOD PLACE
CHARLOTTESVILLE, VA 22901

cc: **MEDTRONIC VASCULAR, INC.**
ATTN: KIM S. GRIGG
3576 UNOCAL PLACE
SANTA ROSA, CA 95403

UNITED STATES PATENT AND TRADEMARK OFFICE

Commissioner for Patents
United States Patent and Trademark Office
P.O. Box 1450
Alexandria, VA 22313-1450
www.uspto.gov

COPY MAILED

FEB 17 2009

OFFICE OF PETITIONS

Hoffman Warnick, LLC
75 State Street
14th Floor
Albany, NY 12207

In re Application of	:	
Dierk Wieckhusen et al.	:	
Application No. 10/521,064	:	ON PETITION
Filed: January 12, 2005	:	
Attorney Docket No. VAND-0022-US	:	

This is a decision on the petition under the unintentional provisions of 37 CFR 1.137(b), filed January 13, 2009, to revive the above-identified application.

The petition is **GRANTED**.

The application became abandoned for failure to timely file a reply within the meaning of 37 CFR 1.113 to the final Office action of April 28, 2008. The proposed reply required for consideration of a petition to revive must be a Notice of Appeal (and appeal fee required by 37 CFR 41.20(b)(2), an amendment that *prima facie* places the application in condition for allowance, a Request for Continued Examination and submission (37 CFR 1.114), or the filing of a continuing application under 37 CFR 1.53(b). See MPEP 711.03(c)(II)(A)(2). No extensions of time were obtained. Accordingly, the date of abandonment of this application is July 29, 2008. A Notice of Abandonment was mailed on January 8, 2009.

The petition satisfies the requirements of 37 CFR 1.137(b) in that petitioner has supplied (1) the reply in the form of a continuing application under 37 CFR 1.53(b), (2) the petition fee of $1620, and (3) a proper statement of unintentional delay. Accordingly, the filing of a continuing application under 37 CFR 1.53(b) is accepted as being unintentionally delayed.

The application is being revived solely for purposes of continuity. As continuity has been established by this decision reviving the application, the application is again abandoned in favor of a continuing application under 37 CFR 1.53(b).

A terminal disclaimer is not necessary. The fee will be refunded to petitioner's credit card.

An extension of time under 37 CFR 1.136 must be filed prior to the expiration of the maximum extendable period for reply. *See* In re Application of S., 8 USPQ2d 1630, 1631 (Comm'r Pats. 1988). Since the $1,110 extension of time fee submitted with the petition on January 13, 2009 was subsequent to the maximum extendable period for reply, this fee is unnecessary and will be credited to petitioner's credit card.

Telephone inquiries concerning this decision should be directed to Kimberly Inabinet at (571) 272-4618.

Carl Friedman
Petitions Examiner
Office of Petitions

PTO/SB/64 (12-08)
Approved for use through 01/31/2009. OMB 0651-0031
U.S. Patent and Trademark Office; U.S. DEPARTMENT OF COMMERCE
Under the Paperwork Reduction Act of 1995, no persons are required to respond to a collection of information unless it displays a valid OMB control number.

PETITION FOR REVIVAL OF AN APPLICATION FOR PATENT ABANDONED UNINTENTIONALLY UNDER 37 CFR 1.137(b)

Docket Number (Optional) VAND-0022-US

First named inventor: Wieckehusen, Dierk

Application No.: 10/521,064 Art Unit: 1616

Filed: 1/12/2005 Examiner: Karpinski, Luke E.

Title: INJECTABLE DEPOT FORMULATION COMPRISING CRYSTALS OF ILOPERIDONE

Attention: Office of Petitions
Mail Stop Petition
Commissioner for Patents
P.O. Box 1450
Alexandria, VA 22313-1450
FAX (571) 273-8300

Refund Ref:
02/13/2009 0030066679

Credit Card Refund Total: $1250.00

Am Exp..: XXXXXXXXXXX1043

NOTE: If information or assistance is needed in completing this form, please contact Petitions Information at (571) 272-3282.

The above-identified application became abandoned for failure to file a timely and proper reply to a notice or action by the United States Patent and Trademark Office. The date of abandonment is the day after the expiration date of the period set for reply in the office notice or action plus an extensions of time actually obtained.

APPLICANT HEREBY PETITIONS FOR REVIVAL OF THIS APPLICATION

NOTE: A grantable petition requires the following items:
(1) Petition fee;
(2) Reply and/or issue fee;
(3) Terminal disclaimer with disclaimer fee - required for all utility and plant applications filed before June 8, 1995; and for all design applications; and
(4) Statement that the entire delay was unintentional.

1. Petition fee
☐ Small entity-fee $ _____ (37 CFR 1.17(m)). Applicant claims small entity status. See 37 CFR 1.27.

☑ Other than small entity – fee $ 1620 (37 CFR 1.17(m))

2. Reply and/or fee
A. The reply and/or fee to the above-noted Office action in the form of continuation application (identify type of reply):

☑ has been filed previously on 10/21/2008.
☐ is enclosed herewith.

B. The issue fee and publication fee (if applicable) of $ _____
☐ has been paid previously on _____
☐ is enclosed herewith.

Adjustment date: 02/13/2009 CKHLOK
01/14/2009 INTEFSW 00001873 10521064
02 FC:1253 -1110.00 OP
03 FC:1814 -140.00 OP

This collection of information is required by 37 CFR 1.137(b). The information is required to obtain or retain a benefit by the public which is to file (and by the USPTO to process) an application. Confidentiality is governed by 35 U.S.C. 122 and 37 CFR 1.11 and 1.14. This collection is estimated to take 1.0 hour to complete, including gathering, preparing, and submitting the completed application form to the USPTO. Time will vary depending upon the individual case. Any comments on the amount of time you require to complete this form and/or suggestions for reducing this burden, should be sent to the Chief Information Officer, U.S. Patent and Trademark Office, U.S. Department of Commerce, P.O. Box 1450, Alexandria, VA 22313-1450. DO NOT SEND FEES OR COMPLETED FORMS TO THIS ADDRESS. **SEND TO: Mail Stop Petition, Commissioner for Patents, P.O. Box 1450, Alexandria, VA 22313-1450.**

If you need assistance in completing the form, call 1-800-PTO-9199 and select option 2.

Under the Paperwork Reduction Act of 1995, no persons are required to respond to a collection of information unless it displays a valid OMB control number.

3. Terminal disclaimer with disclaimer fee

☐ Since this utility/plant application was filed on or after June 8, 1995, no terminal disclaimer is required.

☑ A terminal disclaimer (and disclaimer fee (37 CFR 1.20(d)) of $ _____ for a small entity or $ 140 for other than a small entity) disclaiming the required period of time is enclosed herewith (see PTO/SB/63).

4. STATEMENT: The entire delay in filing the required reply from the due date for the required reply until the filing of a grantable petition under 37 CFR 1.137(b) was unintentional. [NOTE: The United States Patent and Trademark Office may require additional information if there is a question as to whether either the abandonment or the delay in filing a petition under 37 CFR 1.137(b) was unintentional (MPEP 711.03(c), subsections (III)(C) and (D)).]

WARNING:

Petitioner/applicant is cautioned to avoid submitting personal information in documents filed in a patent application that may contribute to identity theft. Personal information such as social security numbers, bank account numbers, or credit card numbers (other than a check or credit card authorization form PTO-2038 submitted for payment purposes) is never required by the USPTO to support a petition or an application. If this type of personal information is included in documents submitted to the USPTO, petitioners/applicants should consider redacting such personal information from the documents before submitting them to the USPTO. Petitioner/applicant is advised that the record of a patent application is available to the public after publication of the application (unless a non-publication request in compliance with 37 CFR 1.213(a) is made in the application) or issuance of a patent. Furthermore, the record from an abandoned application may also be available to the public if the application is referenced in a published application or an issued patent (see 37 CFR 1.14). Checks and credit card authorization forms PTO-2038 submitted for payment purposes are not retained in the application file and therefore are not publicly available.

/Stephen F. Swinton, Jr./	13 January 2009
Signature	Date
Stephen F. Swinton, Jr.	53661
Typed or printed name	Registration Number, if applicable
75 State Street, 14th Floor	518.449.0044
Address	Telephone Number
Albany, New York 12207	
Address	

Enclosures:
☑ Fee Payment
☐ Reply
☑ Terminal Disclaimer Form
☐ Additional sheets containing statements establishing unintentional delay
☐ Other: _____

CERTIFICATE OF MAILING OR TRANSMISSION [37 CFR 1.8(a)]

I hereby certify that this correspondence is being:

☐ Deposited with the United States Postal Service on the date shown below with sufficient postage as first class mail in an envelope addressed to: Mail Stop Petition, Commissioner for Patents, P. O. Box 1450, Alexandria, VA 22313-1450.

☐ Transmitted by facsimile on the date shown below to the United States Patent and Trademark Office at (571) 273-8300.

Date _____ Signature _____

Typed or printed name of person signing certificate _____

UNITED STATES PATENT & TRADEMARK OFFICE
Washington, D.C. 20231

REQUEST FOR PATENT FEE REFUND

1 Date of Request: 2/6/09 | 2 Serial/Patent # 10/521,064

	3 Please refund the following fee(s):	4 PAPER NUMBER	5 DATE FILED	6 AMOUNT
	Filing			$
	Amendment			$
X	Extension of Time		1/13/09	$ 1,110
	Notice of Appeal/Appeal			$
	Petition			$
	Issue			$
	Cert of Correction/Terminal Disc.			$
	Maintenance			$
	Assignment			$
X	Other (Terminal Disclaimer)		1/13/09	$ 140

7 TOTAL AMOUNT OF REFUND $ 1,250

8 TO BE REFUNDED BY:

	Treasury Check
	Credit Deposit A/C #:

9 [ ][ ]--[ ][ ][ ][ ]

10 REASON:

	Overpayment
	Duplicate Payment
X	No Fee Due (Explanation):

No Terminal disclaimer was needed. The extension of time was paid after maximum extendable time period. Refund to credit card.

11 REFUND REQUESTED BY:

TYPED/PRINTED NAME: Kimberly Inabinet TITLE: Petitions Examiner

SIGNATURE: Kimberly Inabinet PHONE: x24618

OFFICE: Office of Petitions

****

THIS SPACE RESERVED FOR FINANCE USE ONLY:

APPROVED: CKhOK DATE: 2/13/09

Instructions for completion of this form appear on the back. After completion, attach white and yellow copies to the official file and mail or hand-carry to:

Office of Finance
Refund Branch
Crystal Park One, Room 802B

FORM PTO 1577
(01/90)

#3

UNITED STATES PATENT AND TRADEMARK OFFICE

13 DEC 2005

Commissioner for Patents
United States Patent and Trademark Office
P.O. Box 1450
Alexandria, VA 22313-1450
www.uspto.gov

Walter Scott
ALSTON & BIRD LLP
Bank of America Plaza
101 South Tryon Street, Suite 4000
Charlotte, NC 28280-4000

In re Application of MITCHELL, Arthur *et al* U.S. Application No.: 10/521,065 PCT No.: PCT/US02/41357 Int. Filing Date: 20 December 2002 Priority Date: None Attorney Docket No.: 049647/284938 For: VIRTUAL MEETINGS	**DECISION ON PETITION FOR REVIVAL UNDER 37 CFR 1.137(b)**

This decision is in response to applicants' "Petition for Revival of an International Application for Patent Designating the U.S. Abandoned Unintentionally Under 37 CFR 1.137(b)" filed with the national stage papers on 12 January 2005.

A review of the subject application reveals it is not abandoned. The earliest (and only) priority date is 20 December 2002. The national stage application was filed 12 January 2005. Hence, the thirty-month period has not yet expired.

Accordingly, applicants' petition to revive is **MOOT**.

The petition fee of $750.00 has been credited to Deposit Account No. 16-0605 as authorized.

This application is being forwarded to the National Stage Processing Division of the Office of PCT Operations for continued processing.

James Thomson

James Thomson
Attorney Advisor
Office of PCT Legal Administration

Tel.: (571) 272-3302

UNITED STATES PATENT AND TRADEMARK OFFICE

Commissioner for Patents
United States Patent and Trademark Office
P.O. Box 1450
Alexandria, VA 22313-1450
www.uspto.gov

NEXSEN PRUET
P O BOX 10107
GREENVILLE SC 29603

COPY MAILED

JAN 11 2007

OFFICE OF PETITIONS

In re Patent No. 7,029,712 :
Issued: April 18, 2006 :
Application No. 10/521,067 : ON PETITION
Filed: January 11, 2005 :
Attorney Docket Number: 31092-05 :

This is a decision on the petition, filed May 8, 2006, under 37 CFR 1.183, which is being treated as a request under 37 CFR 3.81(b)[1] to correct the assignee's name on the front of the Patent.

The petition is **GRANTED**.

Petitioner states that the assignee's name, BIOSYNTRX, INC., was inadvertently omitted from the Fee(s) Transmittal form PTOL-85(b) at the time the issue fee was paid. Accordingly, petitioner requests that a certificate of correction be issued to reflect the correct assignee on the front page of the Letters Patent.

37 CFR 3.81(b), effective June 25, 2004, reads:

> *After payment of the issue fee:* Any request for issuance of an application in the name of the assignee submitted after the date of payment of the issue fee, and any request for a patent to be corrected to state the name of the assignee, must state that the assignment was submitted for recordation as set forth in § 3.11 before issuance of the patent, and must include a request for a certificate of correction under § 1.323 of this chapter (accompanied by the fee set forth in § 1.20(a) and the processing fee set forth in § 1.17(i) of this chapter.

The request was accompanied by a certificate of correction (and fee) as required by 3.81(b). Further, Office assignment records reflect that BIOSYNTRX, INC. is the assignee of record. Accordingly, as the request complies with the provisions of 37 CFR 3.81(b), it would be appropriate for a certificate of correction to issue.

---

[1] *See* Official Gazette of June 22, 2004

A review of the record indicates that the certificate of correction was mailed August 22, 2006.

Petitioner is advised that the fee for a petition under 37 CFR 3.81 is $130.00. While petitioner's deposit account no. 08-0719 was charged in the amount of $400.00 on May 8, 2006, $270.00 is being credited back.

Inquiries concerning this decision should be directed to the undersigned at (571) 272-3212. Any questions concerning the certificate of correction should be directed to the Certificates of Correction Branch at (703) 305-8309.

Patricia Faison-Ball

Patricia Faison-Ball
Senior Petitions Attorney
Office of Petitions

UNITED STATES PATENT AND TRADEMARK OFFICE

COMMISSIONER FOR PATENTS
UNITED STATES PATENT AND TRADEMARK OFFICE
P.O. BOX 1450
ALEXANDRIA, VA 22313-1450
www.uspto.gov

Townsend and Townsend and Crew, LLP
Two Embarcadero Center
Eighth Floor
San Francisco, CA 94111-3834

COPY MAILED

FEB 0 8 2008

OFFICE OF PETITIONS

In re Application of	:	
Whye-Kei Lye et al.	:	
Application No. 10/521,078	:	DECISION ON PETITION
Filed: August 22, 2005	:	TO WITHDRAW
Attorney Docket No. 021764-000920US	:	FROM RECORD
	:	

This is a decision on the Request to Withdraw as attorney or agent under 37 C.F.R. § 1.36(b) or 37 C.F.R. § 10.40 filed January 24, 2008.

The request is **APPROVED**.

A review of the file record indicates the firm Townsend and Townsend and Crew, LLP: (1) does not have power of attorney in this patent application; and (2) has been employed or otherwise engaged in the proceedings in this patent application. In view of the present decision, all the attorneys associated with customer number 20350 have been withdrawn from the present application and may not prepare or submit papers under 37 C.F.R. § 1.34, or correspond in any manner in this application unless appointed in an acceptable power of attorney under 37 C.F.R. § 1.32(b).

The request to change the correspondence of record is not acceptable as the requested correspondence address is not that of (1) the first named signing inventor; or (2) an intervening assignee of the entire interest under 37 C.F.R. 3.71. Accordingly, all correspondence will be mailed to the first named inventor, since no assignee has not properly intervened in this application. If an assignee would like to receive correspondence or appoint counsel to do so, then the appropriate power of attorney documents must be submitted. A courtesy copy will be mailed to the address noted on the request.

It is also noted that compliance with 37 CFR 3.73(b) has not been satisfied in that a Statement setting forth a reel and frame number where the recorded assignment appears in the assignment records of the USPTO has not been provided. A form can be found on the USPTO.gov website (Form No. PTO/SB/96).

Applicant is reminded that there is no attorney of record at this time.

There are no outstanding Office actions at this time.

Telephone inquires concerning this decision should be directed to Kimberly Inabinet at 571-272-4618.

Kimberly Inabinet
Petitions Examiner
Office of Petitions

cc: Whye-Kei Lye
1060 Ramblewood Place
Charlottesville, VA 22901

cc: Medtronic Vascular, Inc.
Attn: Kim S. Grigg
3576 Unocal Place
Santa Rosa, CA 95403

UNITED STATES PATENT AND TRADEMARK OFFICE

UNITED STATES DEPARTMENT OF COMMERCE
United States Patent and Trademark Office
Address: COMMISSIONER FOR PATENTS
P.O. Box 1450
Alexandria, Virginia 22313-1450
www.uspto.gov

APPLICATION NUMBER	FILING OR 371(C) DATE	FIRST NAMED APPLICANT	ATTY. DOCKET NO./TITLE
10/521,078	08/22/2005	Whye-Kei Lye	021764-000920US

CONFIRMATION NO. 6614

POWER OF ATTORNEY NOTICE

20350
TOWNSEND AND TOWNSEND AND CREW, LLP
TWO EMBARCADERO CENTER
EIGHTH FLOOR
SAN FRANCISCO, CA 94111-3834

OC000000028192894

Date Mailed: 02/08/2008

NOTICE REGARDING CHANGE OF POWER OF ATTORNEY

This is in response to the Power of Attorney filed 01/24/2008.

- The withdrawal as attorney in this application has been accepted. Future correspondence will be mailed to the new address of record. 37 CFR 1.33.

/kainabinet/

Office of Initial Patent Examination (571) 272-4000 or 1-800-PTO-9199

United States Patent and Trademark Office

Commissioner for Patents
United States Patent and Trademark Office
P.O. Box 1450
Alexandria, VA 22313-1450
www.uspto.gov

Hoffman & Baron, LLP
6900 Jericho Turnpike
Syosset, NY 11791

21 SEP 2006

In re Application of
Hissink et al.
Application No.: 10/521,126
PCT No.: PCT/NL03/00519
Int. Filing Date: 16 July 2003
Priority Date: 16 July 2002
Attorney Docket No.: 294-207 PCT/US
For: Biodegradable Phase Separated Segmented Multi-Block Polymers

DECISION

This is with regard to the "Petition... To Withdraw The Holding Of Abandonment" filed on 10 July 2006.

BACKGROUND

This international application was filed on 16 July 2003, designated the United States, and claimed an earliest priority date of 16 July 2002. The International Bureau transmitted a copy of the published international application to the USPTO on 22 January 2004. Accordingly, the 30 month time period for paying the basic national fee in the United States expired at midnight on 16 January 2005. Applicants timely filed *inter alia* the basic national fee on 12 January 2005.

On 14 July 2005, a Notification of Missing Requirements (Form PCT/DO/EO/905) was mailed to counsel, requiring the submission of an oath or declaration in compliance with 37 CFR 1.497(a) and (b) and a surcharge under 37 CFR 1.492(h).

DISCUSSION

Petitioner requests revival of this international application with respect to the national stage in the United States, on the basis of alleged non-receipt of the Notification of Missing Requirements mailed on 14 July 2005. As explained in MPEP 711.03(c), and following *Delgar v. Schuyler, 172 USPQ 513 (D.D.C. 1971),* an adequate showing of non-receipt of papers mailed to applicant by the Office must include (1) a statement by the practitioner that the Office action was not received by the practitioner; (2) a statement attesting that a search of the file jacket and docket records indicates that the Office action was not received; and (3) a copy of the docket record where the non-received Office action would have been entered had it been received (the docket records must also be referenced in petitioner's statement).

Petitioner has satisfied requirements (1) and (2).

Concerning requirement (3), counsel has provided copies of the docket records showing where this application would have been docketed for response had the Notification of Missing Requirements mailed on 14 July 2005 been received (specifically, showing applications docketed for response on 14 September 2005). As this application is not among those shown on the

records as docketed for response on 14 September 2005, requirement (3) has been satisfied. Accordingly, the holding of abandonment is hereby **WITHDRAWN**.

CONCLUSION

The petition is **GRANTED**.

This application is being forwarded to the National Stage Processing Branch for further processing. Its date under 35 U.S.C. 371(c)(1), (2) and (4) is **10 July 2006**.

Leonard Smith
PCT Legal Examiner
Office of PCT Legal Administration

George M. Dombroske
PCT Legal Examiner
Office of PCT Legal Administration
Tel: (571) 272-3283
Fax: (571) 273-0459

11 APR 2006

#6

UNITED STATES PATENT AND TRADEMARK OFFICE

Commissioner for Patents
United States Patent and Trademark Office
P.O. Box 1450
Alexandria, VA 22313-1450
www.uspto.gov

James L. Cordek
P.O. Box 88940
St. Louis, MO 63188

In re Application of	:	
WORRALL *et al*	:	
U.S. Application No.: 10/5~~1~~2 1,~~565~~ 145	:	
PCT No.: PCT/US2003/022844	:	
Int. Filing Date: 22 July 2003	:	**DECISION**
Priority Date: 22 July 2002	:	
Attorney Docket No.: SP-1307-PCT US	:	
For: FOOD COATING COMPOSITION AND METHOD OF MAKING SAME	:	

This decision is in response to applicants' petition under 37 CFR 1.47(a) filed 15 August 2005.

BACKGROUND

On 16 June 2005, the DO/EO/US mailed a Notification of Missing Requirements Under 35 U.S.C. 371 (Form PCT/DO/EO/905) indicating that an oath or declaration in compliance with 37 CFR 1.497(a) and (b) and a surcharge fee was required. Applicants were given two months to respond with extensions of time available.

On 15 August 2005, applicants filed a response which was accompanied by, *inter alia*, the subject petition; the $130.00 surcharge fee; a declaration signed by two of the three joint inventors; a statement of facts; copies of letters sent to the nonsigning inventor and Express Mail receipts; and authorization to charge the petition fee and any additional fee required to Deposit Account No. 50-0421.

DISCUSSION

Petitioners claim that Thomas R. Katen refuses to join the application and have filed the subject petition as a response to the Form PCT/DO/EO/905 mailed 16 June 2005.

A petition under 37 CFR 1.47(a) requires: (1) the petition fee; (2) factual proof that the missing joint inventor cannot be located or refuses to cooperate; (3) a statement of the last known address of the nonsigning joint inventor; (4) and an oath or declaration executed by the signing joint inventor on their behalf and on behalf of the nonsigning joint inventor.

Concerning item (1), the fee for a petition under 37 CFR 1.47 changed to $200.00

on 08 December 2004. This fee has been charged to Deposit Account No. 50-0421 as authorized.

With regards to item (3), the last known address of co-inventor Thomas R. Katen is listed as:

3875 Wildshire East Road
Wildshire, Ohio 45898

Concerning item (4), the 37 CFR 1.47(a) applicant submitted a declaration signed by two of the three co-inventors on behalf of themselves and the nonsigning joint inventor. This declaration meets the requirements of section 409.03(a) and is in compliance with 37 CFR 1.497(a) and (b).

Items (1), (3) and (4) of 37 CFR 1.47(a) are satisfied.

Regarding item (2), the 37 CFR 1.47(a) applicant included an unsigned statement of facts of the actions taken by James L. Cordek in attempting to obtain the signature of the nonsigning inventor. The statement indicates that a copy of the patent application was sent on 19 July 2005. Mr. Cordeck phoned Mr. Katen on 01 August 2005 and the nonsigning inventor indicated that he would cooperate and "stated that he would sign the declaration and would return it to James I. Cordek." Mr. Cordek sent another copy of the application to the nonsigning inventor on 05 August 2005. Petitioners claim that no response has been received as of 15 August 2005. Petitioners included documentary evidence that the letters were delivered to the last known address of Mr. Katen and the documents contained a complete copy of the above-captioned application. However, this evidence is insufficient.

Section 409.03(d) of the MPEP discusses a refusal and states, in part:

> Where a refusal of the inventor to sign the application papers is alleged, the circumstances of the presentation of the application papers and of the refusal must be specified in a statement of facts by the person who presented the inventor with the application papers and/or to whom the refusal was made. . . .
>
> When it is concluded by the 37 CFR 1.47 applicant that a nonsigning inventor's conduct constitutes a refusal, all facts upon which that conclusion is based should be stated in the statement of facts in support of the petition or directly in the petition. If there is documentary evidence to support facts alleged in the petition or in any statement of facts, such evidence should be submitted.

The time period between the phone call on 01 August 2005 and applicants' petition filed 15 August 2005 was too short for this conduct to constitute a refusal. The letter dated 05 August 2005 did not even list a deadline except "as soon as possible." Moreover, the statement of facts was unsigned.

Petitioners must provide a signed affidavit or declaration by Mr. Cordek listing the steps taken to contact Mr. Katen and any response received, if any. In addition, petitioners should indicate whether any further attempts to contact the nonsigning inventor has taken place to determine if Mr. Katen received the documents and has changed his mind on cooperating. If no attempt has been made, petitioners should explain why not.

For this reason, item (2) of 37 CFR 1.47(a) is not yet satisfied.

CONCLUSION

Applicants' petition under 37 CFR 1.47(a) is **DISMISSED** without prejudice.

If reconsideration on the merits of this petition is desired, a proper response must be filed within **TWO (2) MONTHS** from the mail date of this decision. No additional petition fee is required.

Any further correspondence with respect to this matter deposited with the United States Postal Service should be addressed to the Mail Stop PCT, Commissioner for Patents, Office of PCT Legal Administration, P.O. Box 1450, Alexandria, Virginia 22313-1450, with the contents of the letter marked to the attention of the Office of PCT Legal Administration.

James Thomson

James Thomson
Attorney Advisor
Office of PCT Legal Administration

Tel.: (571) 272-3302

#8

UNITED STATES PATENT AND TRADEMARK OFFICE

Commissioner for Patents
United States Patent and Trademark Office
P.O. Box 1450
Alexandria, VA 22313-1450
www.uspto.gov

14 JUL 2006

James L. Cordek
P.O. Box 88940
St. Louis, MO 63188

In re Application of
WORRALL *et al*
U.S. Application No.: 10/521,145
PCT No.: PCT/US2003/022844
Int. Filing Date: 22 July 2003
Priority Date: 22 July 2002
Attorney Docket No.: SP-1307-PCT US
For: FOOD COATING COMPOSITION AND METHOD OF MAKING SAME

DECISION

This is a decision on the papers filed 09 June 2006 which are treated as a renewed petition under 37 CFR 1.47(a).

BACKGROUND

On 11 April 2006, a decision dismissing applicant's petition under 37 CFR 1.47(a) was mailed. Petitioners were given two-months to respond.

On 09 June 2006, applicants filed the subject response which was accompanied by a declaration executed by the nonsigning inventor, Thomas R. Katan.

DISCUSSION

The 37 CFR 1.47(a) applicants responded to the 23 June 2005 decision by providing a declaration executed by the nonsigning joint inventor. However, a review of the declaration shows that it is not in compliance with 37 CFR 1.497(a)(3).

The declaration signed by Mr. Katan is defective in that it lists only one inventor while the international publication ("WO 2004/008873") shows that there are three inventors for PCT/US2003/022844.

The declaration signed by each inventor must list the proper inventive entity.

CONCLUSION

For the reason discussed above, applicants' renewed petition under 37 CFR 1.47(a) is **DISMISSED** without prejudice.

If reconsideration on the merits of this petition is desired, a proper response must be filed within **TWO (2) MONTHS** from the mail date of this decision. Extensions of time are available.

Any further correspondence with respect to this matter deposited with the United States Postal Service should be addressed to the Mail Stop PCT, Commissioner for Patents, Office of PCT Legal Administration, P.O. Box 1450, Alexandria, Virginia 22313-1450, with the contents of the letter marked to the attention of the Office of PCT Legal Administration.

James Thomson

James Thomson
Attorney Advisor
Office of PCT Legal Administration

Tel.: (571) 272-3302

#10

UNITED STATES PATENT AND TRADEMARK OFFICE

Commissioner for Patents
United States Patent and Trademark Office
P.O. Box 1450
Alexandria, VA 22313-1450
www.uspto.gov

21 SEP 2006

James L. Cordek
P.O. Box 88940
St. Louis, MO 63188

In re Application of
WORRALL *et al*
U.S. Application No.: 10/521,145
PCT No.: PCT/US2003/022844
Int. Filing Date: 22 July 2003
Priority Date: 22 July 2002
Attorney Docket No.: SP-1307-PCT US
For: FOOD COATING COMPOSITION AND METHOD OF MAKING SAME

DECISION

This is a decision on the papers filed 23 August 2006.

BACKGROUND

On 14 July 2006, a decision dismissing applicants' petition under 37 CR 1.47(a) was mailed. Applicants were given two months to respond.

On 23 August 2006, applicants responded by providing another declaration executed by the nonsigning inventor, Thomas R. Katan.

DISCUSSION

In response to the decision mailed 14 July 2006, petitioners included a declaration signed by the nonsigning inventor. A review of the declaration shows that it complies with 37 CFR 1.497(a) and (b).

No further action on the petition under 37 CFR 1.47(a) is required.

CONCLUSION

Accordingly, the petition under 37 CFR 1.47(a) is **DISMISSED** as **MOOT**.

Applicants have completed the requirements for acceptance under 35 U.S.C. 371(c). The application has an international filing date of 22 July 2003 under 35 U.S.C. 363 and a 35 U.S.C. 371(c)(1), (c)(2) and (c)(4) date of 23 August 2006.

This application is being forwarded to the National Stage Processing Division of

the Office of PCT Operations for continued processing.

James Thomson

James Thomson
Attorney Advisor
Office of PCT Legal Administration

Tel.: (571) 272-3302

UNITED STATES PATENT AND TRADEMARK OFFICE

Commissioner for Patents
United States Patent and Trademark Office
P.O. Box 1450
Alexandria, VA 22313-1450
www.uspto.gov

COPY MAILED

AUG 10 2009

OFFICE OF PETITIONS

Millen, White, Zelano & Branigan, P.C.
2200 Clarendon Boulevard
Suite 1400
Arlington, VA 22201

In re Application of	:	
Jaouad Zemmouri et al.	:	
Application No. 10/521,164	:	DECISION ON PETITION
Filed: January 19, 2006	:	
Attorney Docket No. LOM-0044	:	

This is a decision on the petition under the unintentional provisions of 37 CFR 1.137(b), filed April 27, 2009, to revive the above-identified application.

The petition is **DISMISSED AS MOOT**.

A review of the record shows that the reply in the form of a RCE and Amendment along with a three month extension of time filed on March 25, 2009, was filed within the maximum extendable time period of the Office action mailed on September 25, 2008. Since this application is not considered abandoned, the petition is not necessary.

It should be noted that the petition fee of $810 will be refunded to petitioner's credit card.

The application is being referred to Technology Center 3769 for further processing of the reply received on March 25, 2009.

Telephone inquiries concerning this decision should be directed to Kimberly Inabinet at (571) 272-4618.

Carl Friedman
Petitions Examiner
Office of Petitions

UNITED STATES PATENT AND TRADEMARK OFFICE

Commissioner for Patents
United States Patent and Trademark Office
P.O. Box 1450
Alexandria, VA 22313-1450
www.uspto.gov

ALBIHNS STOCKHOLM AB
BOX 5581, LINNEGATAN 2
SE-114 85 STOCKHOLM; SWEDENn
STOCKHOLM SE SWEDEN

COPY MAILED

OCT 18 2006

OFFICE OF PETITIONS

In re Application of

STROMQVIST, et al.
Application No. 10/521,198
Filed: August 12, 2005
Attorney Docket No. 67156-78278

DECISION ON PETITION
TO WITHDRAW
FROM RECORD

This is a decision on the Request to Withdraw as attorney or agent of record under 37 C.F.R. § 1.36(b), filed June 29, 2006.

The request is **NOT APPROVED**.

A grantable request to withdraw as attorney/agent of record must be signed by every attorney/agent seeking to withdraw or contain a clear indication that one attorney is signing on behalf of another/others. A request to withdraw will not be approved unless at least 30 (thirty) days would remain between the date of approval and the later of the expiration date of a time to file a response or the expiration date of the maximum time period which can be extended under 37 C.F.R. § 1.136(a).

The request to withdraw less than all attorneys appointed by customer number 26288 cannot be approved. The addition and/or deletion of a practitioner from the list of practitioners associated with a Customer Number should be made by submitting a "Request for Customer Number Data Change" (PTO/SB/124) which will result in the addition or deletion of such practitioner from the list of persons authorized to represent any applicant or assignee of the entire interest who appointed all of the practitioners associated with such Customer Number. See MPEP 403 Section I. Customer Number Practice. The correspondence address of record remains unchanged.

Telephone inquiries concerning this decision should be directed to Monica A. Graves at 571-272-7253.

David Bucci
Petitions Examiner
Office of Petitions

UNITED STATES PATENT AND TRADEMARK OFFICE

UNITED STATES DEPARTMENT OF COMMERCE
United States Patent and Trademark Office
Address: COMMISSIONER FOR PATENTS
P.O. Box 1450
Alexandria, Virginia 22313-1450
www.uspto.gov

YOUNG & THOMPSON
209 Madison Street
Suite 500
Alexandria, VA 22314

Mail Date: 07/06/2010

Applicant	: Thomas Stromqvist	: DECISION ON REQUEST FOR
Patent Number	: 7644190	: RECALCULATION of PATENT
Issue Date	: 01/05/2010	: TERM ADJUSTMENT IN VIEW
Application No	: 10/521,198	: OF WYETH AND NOTICE OF INTENT TO
Filed	: 08/12/2005	: ISSUE CERTIFICATE OF CORRECTION
		:

The Request for Recalculation is **GRANTED** to the extent indicated.

The patent term adjustment has been determined to be **1152** days. The USPTO will *sua sponte* issue a certificate of correction reflecting the amount of PTA days determined by the recalculation.

Prior to the issuance of the certificate of correction, the USPTO will afford patentee an opportunity to be heard and request reconsideration. Accordingly, patentee has **one month or thirty (30) days**, whichever is longer, to file a request for reconsideration of this patent term adjustment calculation. See 35 U.S.C. 154(b)(3)(B)(ii) and 37 CFR 1.322(a)(4). No extensions of time will be granted under 37 CFR 1.136.

Patentee should use document code PET.OP if electronically filing a request for reconsideration of this patent term adjustment calculation. The patentee must also include the information required by 37 CFR 1.705(b)(2) and the fee required by 37 CFR 1.18(e). If patentee does not file a timely request for reconsideration of this patent term adjustment calculation including the information required by 37 CFR 1.705(b)(2) and the fee required by 37 CFR 1.18(e), the USPTO will issue a certificate of correction reflecting the PTA determination noted above.

Patentee should be aware that in order to preserve the right to review in the United States District Court for the District of Columbia of the USPTO patent term adjustment determination, patentee must ensure that he or she also take the steps required under 35 U.S.C. 154(b)(4)(A) in a timely manner. Nothing in the request for recalculation should be construed as providing an alternative time frame for commencing a civil action under 35 U.S.C. 154(b)(4)(A).

Any questions concerning this decision should be directed to the Office of Patent Legal Administration at 571-272-7702.

UNITED STATES PATENT AND TRADEMARK OFFICE

Commissioner for Patents
United States Patent and Trademark Office
P.O. Box 1450
Alexandria, VA 22313-1450
www.uspto.gov

APPLICATION NUMBER	FILING/RECEIPT DATE	FIRST NAMED APPLICANT	ATTORNEY DOCKET NUMBER
10/521201	08/12/2005	Yasunori Kano	SON-2800

DATE MAILED: November 25, 2008

Ronald P Kananen
Rader Fishman & Grauer
Suite 501
1233 20th Street NW
Washington DC 20036

DECISION DISMISSING PETITION UNDER 37 CFR 1.138(d)
The declaration of express abandonment will not be recognized

This is in response to the petition under 37 CFR 1.138(d), requesting for a refund of any previously paid search fee and excess claims fee in the above-identified application.

The petition is dismissed.

The express abandonment will **not** be recognized for the reason(s) indicated below:

- ☐ The petition was not filed in sufficient time to permit the appropriate officials to recognize the abandonment before an examination has been made of the application. See 37 CFR 1.138(d).
- ☒ The application is not an application filed under 35 U.S.C. 111(a) on or after December 8, 2004.
- ☐ The petition was not signed by a party authorized by 37 CFR 1.33(b)(1), (3) or (4).
- ☐ The petition for express abandonment under 1.138(d) is dismissed because the applicant did not pay any search fee and excess claims fees in the above-identified application.

Any inquiries concerning this decision should be directed to the Office of Data Management at (571) 272-4200.

Betty Powell

Patent Publication Branch
Office of Data Management

UNITED STATES PATENT AND TRADEMARK OFFICE

Commissioner for Patents
United States Patent and Trademark Office
P.O. Box 1450
Alexandria, VA 22313-1450
www.uspto.gov

David G. Burleson
Zollinger & Burleson Ltd
P.O. Box 2368
Canton, OH 44720-0368

COPY MAILED

JUL 20 2006

OFFICE OF PETITIONS

In re Application of	:	
Roger M. Humbel	:	
Application No. 10/521,224	:	DECISION ON PETITION
Filed: February 23, 2005	:	TO WITHDRAW
Attorney Docket No. HU001cOnUSb	:	FROM RECORD
	:	

This is a decision on the Request to Withdraw as attorney or agent of record under 37 C.F.R. § 1.36(b), filed October 11, 2005.

The request is **APPROVED**.

A grantable request to withdraw as attorney/agent of record must be signed by every attorney/agent seeking to withdraw or contain a clear indication that one attorney is signing on behalf of another/others. A request to withdraw will not be approved unless at least 30 (thirty) days would remain between the date of approval and the later of the expiration date of a time to file a response or the expiration date of the maximum time period which can be extended under 37 C.F.R. § 1.136(a).

The request was signed by David G. Burleson on behalf of all attorneys of record who are associated with customer No. 46588.

All attorneys/agents associated with the Customer Number 46588 have been withdrawn.

Applicant is reminded that there is no attorney of record at this time.

All future correspondence will be directed to the first named inventor Roger Humbel at the address indicated below.

Telephone inquiries concerning this decision should be directed to Monica Graves at 571-272-7353.

for David Bucci
Petitions Examiner
Office of Petitions

cc: Roger M. Humber
Pilgerstrasse 6
Dattwil, Switzerland 5405

03 AUG 2005

#3

UNITED STATES PATENT AND TRADEMARK OFFICE

Commissioner for Patents
United States Patent and Trademark Office
P.O. Box 1450
Alexandria, VA 22313-1450
www.uspto.gov

James J. Napoli
MARSHALL, GERSTEIN & BORUN LLP
6300 Sears Tower
233 South Wacker Street
Chicago, IL 60606

In re Application of :
GARNER, Archie *et al* :
U.S. Application No.: 10/521,225 :
PCT No.: PCT/US03/22722 :
Int. Filing Date: 21 July 2003 : **DECISION**
Priority Date: 12 August 2002 :
Attorney's Docket No.: 13015/38719BUS :
For: URETHANE ACRYLATE GEL COAT :
RESIN AND METHOD OF MAKING :

This is a decision on the request to add an inventor in the above-captioned application filed 06 July 2005 which is treated as a petition under 37 CFR 1.497(d). The $130.00 petition fee has been paid

BACKGROUND

On 13 January 2005, applicants filed papers to enter the national stage of PCT/US03/22722.

On 06 July 2005, applicants filed the subject petition which was accompanied by, *inter alia*,; the petition and surcharge fee; a "Statement of Ehtisham A. Ashai to Correct Inventorship Under 37 CFR 1.48(a)"; an "Assent of Assignee to Addition of Original Named Inventors"; and an executed declaration which included Mr. Ashai as a joint inventor.

DISCUSSION

Applicants request to add Ehtisham A. Ashai as an inventor in the above-captioned application. 37 CFR 1.497(d) applies when the inventorship in a national stage application filed under 35 U.S.C. 371 differs from that set forth in the international application (see 37 CFR 1.48(f)(1)). 37 CFR 1.497(d) states, in part:

> (d) If the oath or declaration filed pursuant to 35 U.S.C. 371(c)(4) and this section names an inventive entity different from the inventive entity set forth in the international application, the oath or declaration must be accompanied by:
>
> > (1) A statement from each person being added as an inventor . . . that any error in inventorship in the international application occurred without

deceptive intention on his or her part;

(2) The processing fee set forth in § 1.17(l); and

(3) If an assignment has been executed by any of the original named inventors, the written consent of the assignees.

Here, applicants filed a statement by Ehtisham A. Ashai who requests to be added as an inventor in the above-captioned application. The statement declares that "[t]he omission was due to an error that was diligently corrected after discovery of the error." The processing fee of $130.00 has been paid.

Applicants also submitted a document titled "Assent of Assignee to Addition of Original Named Inventors" consenting to the change of inventorship in the above-identified application. This document was signed by the Secretary of Valspar Sourcing, Inc. The position of Secretary is a position recognized as having the authority to sign for a corporation. *See* § 324 MPEP.

Therefore, all the requirements of 37 CFR 1.497(d) are complete.

CONCLUSION

Applicants' request under 37 CFR 1.497(d) to add Ehtisham A. Ashai as a joint inventor in the above-captioned application is **GRANTED**.

Applicants have completed the requirements for acceptance under 35 U.S.C. 371(c). The application has an international filing date of 21 July 2003, under 35 U.S.C. 363, and a 35 U.S.C. 371 date of 06 July 2005.

This application is being forwarded to the United States Designated/Elected Office for further processing in accordance with this decision.

James Thomson

James Thomson
Attorney Advisor
Office of PCT Legal Administration

Tel.: (571) 272-3302

09 AUG 2005

UNITED STATES PATENT AND TRADEMARK OFFICE

COMMISSIONER FOR PATENTS
UNITED STATES PATENT AND TRADEMARK OFFICE
P.O. BOX 1450
ALEXANDRIA, VA 22313-1450
www.uspto.gov

OSHA LIANG L.L.P.
1221 MCKINNEY STREET
SUITE 2800
HOUSTON, TX 77010

In re Application of DRABCZUK	:	
U.S. Application No.: 10/521,228	:	
PCT Application No.: PCT/IB03/02801	:	DECISION
Int. Filing Date: 15 July 2003	:	
Priority Date Claimed: 15 July 2002	:	
Attorney Docket No.: 09669/045001	:	
For: USB DEVICE	:	

This is in response to applicant's "Request for Corrected Filing Receipt" filed 05 August 2005.

BACKGROUND

On 15 July 2003, applicant filed international application PCT/IB03/02801, which claimed priority of an earlier European Patent Office application filed 15 July 2002. A copy of the international application was communicated to the USPTO from the International Bureau on 22 January 2004. The thirty-month period for paying the basic national fee in the United States expired on 15 January 2005.

On 13 January 2005, applicant filed national stage papers in the United States Designated/Elected Office (DO/EO/US). The submission was accompanied by, *inter alia*, the basic national fee required by 35 U.S.C. 371(c)(1).

On 21 July 2005, the DO/EO/US mailed a Notification of Acceptance of Application Under 35 U.S.C. 371 (Form PCT/DO/EO/903) and an official filing receipt.

On 05 August 2005, applicant filed the present request for corrected filing receipt.

DISCUSSION

A review of the application file reveals that a properly executed oath or declaration has not been submitted. Therefore, the Notification of Acceptance of Application and official filing receipt were sent in error.

CONCLUSION

For the reasons above, the Notification of Acceptance of Application Under 35 U.S.C. 371 (Form PCT/DO/EO/903) and official filing receipt mailed 21 July 2005 are hereby VACATED.

This application is being forwarded to the United States Designated/Elected Office (DO/EO/US) for further processing in accordance with this decision, including preparation and mailing of a Notification of Missing Requirements under 35 U.S.C. 371 (Form PCT/DO/EO/905) indicating that an oath or declaration in compliance with 37 CFR 1.497 must be filed.

Bryan Tung
PCT Legal Examiner
PCT Legal Office

Telephone: 571-272-3303
Facsimile: 571-273-0459

UNITED STATES PATENT AND TRADEMARK OFFICE

#11

Commissioner for Patents
United States Patent and Trademark Office
P.O. Box 1450
Alexandria, VA 22313-1450
www.uspto.gov

11 JUL 2006

RADER, FISHMAN & GRAUER
1233 20th Street, NW
Suite 501
Washington, DC 20036

In re Application of: Shinjiro OGITA, et al. Application No.: 10/521,244 Filing Date: January 14, 2005 Attorney's Docket No.: KSM-0228 For: PROCESS FOR PRODUCING A DECAFFEINATED COFFEE PLANT BY GENETIC RECOMBINATION	DECISION ON PETITION UNDER 37 CFR 1.181

This decision is issued in response to applicants' "Reply To Notification Of Defective Response" filed November 23, 2005, treated herein as a petition under 37 CFR 1.181 to treat the present application as a filing under 35 U.S.C. 111(a). No petition fee is required.

BACKGROUND

On July 16, 2003, applicants filed international application PCT/JP2003/009008. The international application claimed a priority date of July 16, 2002 and designated the United States. On January 22, 2004, the International Bureau (IB) communicated a copy of the international application to the United States Patent and Trademark Office (USPTO). The deadline for submission of the basic national fee was thirty months from the priority date, i.e., January 16, 2005.

On January 14, 2005, applicants filed a Transmittal Letter requesting entry into the national stage in the United States under 35 U.S.C. 371, accompanied by, among other materials, payment of the basic national fee and an English translation of the specification.

On August 03, 2005, the United States Designated/Elected Office (DO/EO/US) mailed a Notification Of Missing Requirements (Form PCT/DO/EO/905) requiring submission of a translation of the international application, an oath or declaration in compliance with 37 CFR 1.497, and the processing fee and surcharge required for filing these materials later than thirty months after the priority date.

On August 18, 2005, applicants filed a "Response To Notification Of Missing Requirements" that included, among other materials, an executed declaration and payment of the required surcharge and processing fee.

On October 25, 2005, the DO/EO/US mailed a "Notification Of Defective Response" (Form PCT/DO/EO/916) indicating that a proper translation into English of the international application was required. The Notification indicated that the filed translation was defective because the number of claims was not the same as the number of claims present in the international application.

On November 23, 2005, applicants filed the "Reply To Notification Of Defective Response" considered as a petition herein. This submission requests that the application be treated as a filing under 35 U.S.C. 111(a), rather than 35 U.S.C. 371.

On April 19, 2006, the DO/EO/US mailed a "Notification Of Abandonment" (Form PCT/DO/EO/909) indicating that the application was abandoned for failure to file a proper response to the Notification Of Missing Requirements.

DISCUSSION

Any intended filing of an international application as a national stage application must clearly and unambiguously be identified as such and must satisfy all of the conditions set forth in 35 U.S.C. 371(c). See 37 CFR 1.495(g):

> The documents and fees submitted ... must be clearly identified as a submission to enter the national stage under 35 U.S.C. 371, otherwise the submission will be considered as being made under 35 U.S.C. 111.

In addition, section 1893.03(a) of the MPEP states the following:

> If there are any conflicting instructions as to whether the filing is under 35 U.S.C. 111(a) or 35 U.S.C. 371, the application will be accepted as filed under 35 U.S.C. 111(a).

The English language specification filed by applicants herein on January 14, 2005 stated that "[t]his application is a continuation-in-part application of International Application PCT/JP2003/009008 (not published in English) filed July 16, 2003." This statement in the specification is inconsistent with the intent to enter the National State under 35 U.S.C. 371. Accordingly, the original papers filed on January 14, 2005 are properly treated as a filing under 35 U.S.C. 111(a).

CONCLUSION

Applicants' petition to convert the application from a national stage application under 35 U.S.C. 371 to an application filed under 35 U.S.C. 111(a) is **GRANTED**.

The Notification Of Missing Requirements mailed August 03, 2005, the Notification Of Defective Response mailed October 25, 2005, and the Notification Of Abandonment mailed April 19, 2006, all of which were based on the present application being treated under 35 U.S.C. 371, are all hereby **VACATED**.

The application is being forwarded to the Office Of Initial Patent Examination (OIPE) for further processing as an application filed under 35 U.S.C. 111(a) with a filing date of January 14, 2005.

Richard M. Ross
Attorney Advisor
Office of PCT Legal Administration
Telephone: (571) 272-3296
Facsimile: (571) 273-0459

28 JUL 2005

UNITED STATES PATENT AND TRADEMARK OFFICE

COMMISSIONER FOR PATENTS
UNITED STATES PATENT AND TRADEMARK OFFICE
P.O. BOX 1450
ALEXANDRIA, VA 22313-1450
www.uspto.gov

John W. Bailey
Birch, Stewart, Kolasch & Birch, LLP
P.O. Box 747
Falls Church, VA 22040-747

In re Application of	:	
SADAO et al.	:	
Application No.: 10/521,252	:	DECISION ON
PCT No.: PCT/JP03/09061	:	PAPERS UNDER 37 CFR 1.42
Int. Filing Date: 17 July 2003	:	
Priority Date: 19 July 2002	:	
Attorney Docket No.: 1422-0650PUS1	:	
For: PHOTOCATALYST-CONTAINING BASE MATERIAL		

This decision is in response to the declaration filed 14 January 2005 which is being treated as a request under 37 CFR 1.42. No petition fee is required.

BACKGROUND

On 17 July 2003, applicants filed international application PCT/JP03/09061, which claimed a priority date of 19 July 2002. A copy of the international application was communicated to the United States Patent and Trademark Office from the International Bureau on 29 January 2004. Pursuant to 37 CFR 1.495, the deadline for payment of the basic national fee was to expire on 19 January 2005.

On 14 January 2005, applicants filed a transmittal letter for entry into the national stage in the United States accompanied, inter alia, by: the basic national fee; a copy of an international application; a preliminary amendment; and an executed declaration. The declaration was executed by: Masamichi Kuroda and Fumio Kuroda as inventors and Kiyoko Murasawa on behalf of deceased inventor, Sadao Murasawa.

DISCUSSION

37 CFR 1.42 *When the Inventor is Dead*, states, in part:

> In case of the death of the inventor, the legal representative (executor, administrator, etc.) of the deceased inventor may make the necessary oath or declaration, and apply for and obtain the patent.

The declaration submitted on 14 January 2005 was executed by Kiyoko Murasawa as "legal representative" of the deceased inventor, Sadao Murasawa. The declaration is acceptable under 37 CFR 1.42 and complies with 37 CFR 1.497(a)-(b).

CONCLUSION

The papers filed under 37 CFR 1.42 are **ACCEPTED**.

The application is being returned to the United States Designated/Elected Office for processing in accordance with this decision.

Anthony Smith

Anthony Smith
Attorney-Advisor
Office of PCT Legal Administration
Tel: (571) 272-3298
Fax: (571) 273-0459

#5

UNITED STATES PATENT and TRADEMARK OFFICE

27 JAN 2006

COMMISSIONER FOR PATENTS
UNITED STATES PATENT AND TRADEMARK OFFICE
P.O BOX 1450
ALEXANDRIA, VA 22313-1450
www.uspto.gov

Dilworth & Barrese, LLP
333 Earle Ovington Boulevard, Suite 702
Uniondale, New York 11553

In re Application of	DECISION ON
Max SEGERLJUNG ET AL	
PCT No.: PCT/SE2003/001073	
Application No: 10/521,281	PETITION UNDER
Int. Filing Date: 23 June 2003	
Priority Date: 15 July 2002	
Attorney's Docket No.: 821-67	37 CFR 1.47(a)
For: A VEHICLE AND A METHOD FOR CONTROLLING STEERING THEREOF	

This is in response to the "PETITION FOR FILING UNDER 37 C.F.R. 1.47(a)" filed on 22 December 2005. The petition fee is now $200.00 for a petition under 37 CFR 1.47(a) so $70 has been charged to petitioner's deposit account 04-1121 stipulated in the petition letter filed on 22 December 2005.

BACKGROUND

On 23 June 2003, applicants filed international application PCT/SE2003/001073, which claimed priority to an earlier application filed 15 July 2002. A copy of the international application was communicated by the International Bureau to the United States Patent and Trademark Office on 22 January 2004.

On 14 January 2005, applicants filed in the United States Patent & Trademark Office (USPTO) a transmittal letter for entry into the national stage in the U.S. under 35 U.SC. 371, which was accompanied by, inter alia, the U.S. basic national fee, and an executed declaration signed by Max Segerljung.

On 20 July 2004, the United States Designated/Elected Office (DO/EO/US) mailed a "NOTIFICATION OF MISSING REQUIREMENTS UNDER 35 U.S.C. 371 IN THE UNITED STATES DESIGNATED/ELECTED OFFICE (DO/EO/US)" (Form PCT/DO/EO/905) which informed applicant, inter alia, that an "Oath or Declaration of the inventors, in compliance with 37 CFR 1.497(a), and (b), identifying the application by International application number and international filing date." The current oath or declaration does not comply with 37 CFR 1.497(a) and (b) in that it: the second inventor is not listed on the declaration.

On 22 December 2005, petitioner filed the present petition, a declaration in support of filing on behalf of omitted deceased inventor Kurt Dahlstrom accompanied, inter alia, an executed Declaration by Max Segerljung but without the signature of Johanna Dahlstrom the legal representative of Kurt Dahlstrom's estate.

DISCUSSION

A petition under 37 CFR 1.47(a) must be accompanied by (1) the fee under 37 CFR 1.17(g), (2) factual proof that the missing joint inventor refuses to execute the application or cannot be reached after diligent effort, (3) a statement of the last known address of the missing inventor, and (4) an oath or declaration by each 37 CFR 1.47(a) applicant on his or her own behalf and on behalf of the non-signing joint inventor.

Furthermore, section 409.03(d) of the Manual of Patent Examining Procedure (M.P.E.P.) **Proof of Unavailability or Refusal**, the relevant sections states, in part:

> **REFUSAL TO JOIN:**
>
> A refusal by an inventor to sign an oath or declaration when the inventor has not been presented with the application papers does not itself suggest that the inventor is refusing to join the application unless it is clear that the inventor understands exactly what he or she is being asked to sign and refuses to accept the application papers. A copy of the application papers should be sent to the last known address of the nonsigning inventor, or, if the nonsigning inventor is represented by counsel, to the address of the nonsigning inventor's attorney. The fact that an application may contain proprietary information does not relieve the **37 CFR 1.47** applicant of the responsibility to present the application papers to the inventor if the inventor is willing to receive the papers in order to sign the oath or declaration. It is noted that the inventor may obtain a complete copy of the application, unless the inventor has assigned his or her interest in the application, and the assignee has requested that the inventor not be permitted access. See **MPEP § 106**. It is reasonable to require that the inventor be presented with the application papers before a petition under **37 CFR 1.47** is granted since such a procedure ensures that the inventor is apprised of the application to which the oath or declaration is directed. *In re Gray*, 115 USPQ 80 (Comm'r Pat. 1956).
>
> Where a refusal of the inventor to sign the application papers is alleged, the circumstances of the presentation of the application papers and of the refusal must be specified in a statement of facts by the person who presented the inventor with the application papers and/or to whom the refusal was made. Statements by a party not present when an oral refusal is made will not be accepted.

> Proof that a *bona fide* attempt was made to present a copy of the application papers (specification, including claims, drawings, and oath or declaration) to the nonsigning inventor for signature, but the inventor refused to accept delivery of the papers or expressly stated that the application papers should not be sent, may be sufficient. When there is an express oral refusal, that fact along with the time and place of the refusal must be stated in the statement of facts. When there is an express written refusal, a copy of the document evidencing that refusal must be made part of the statement of facts. The document may be redacted to remove material not related to the inventor's reasons for refusal.
>
> When it is concluded by the **37 CFR 1.47** applicant that a nonsigning inventor's conduct constitutes a refusal, all facts upon which that conclusion is based should be stated in the statement of facts in support of the petition or directly in the petition. If there is documentary evidence to support facts alleged in the petition or in any statement of facts, such evidence should be submitted. Whenever a nonsigning inventor gives a reason for refusing to sign the application oath or declaration, that reason should be stated in the petition.

Petitioner has satisfied requirements (1) and (3) of 37 CFR 1.47(a) but not requirements (2) and (4).

Regarding requirement (1), petitioner has provided the complete fee of $200.00 under 37 CFR 1.17(g).

In this case regarding requirement (2), petitioner has stated that a complete copy of the applications was sent to Johanna Dahlstrom for her review and to sign the required documents. The declaration also states that as of December 5, 2005, Johanna Dahlstrom has not responded. Although, petitioner has provided the cover mailed with the application papers, petitioner has not included documentary evidence that the application papers were indeed delivered and received by Johanna Dalstrom. Petitioner only states that the letter was sent by DHL but has not provided the postal receipt or a signed receipt acknowledging that the papers were delivered and signed by Johanna Dahlstrom.

In addition, it is unclear if Mr. Olsson has first hand knowledge of the mailing to Johanna Dahlstrom as recited in paragraph 3, if he doesn't then petitioner needs to submit statements, with specific facts on the actions referred to the mailing of the application papers to Johanna Dahlstrom by persons who have first-hand knowledge of such facts.

Regarding requirement 3, petitioner has provided a statement of the last known address of the legal representative of the deceased inventor.

Regarding requirement 4, the declaration filed on 14 January 2005 is defective since it does not comply with 37 CFR 1.497(a)(3). A Declaration, under 37 CFR 1.497(a)(3), must identify each inventor, and in this case the deceased inventor, Kurt Dahlstrom, has not been listed in the declaration. See MPEP § 602.

Consequently, petitioner has not satisfied all the items under 37 CFR 1.47(a).

DECISION

The petition under 37 CFR 1.47(a) is **DISMISSED** without prejudice.

If reconsideration of the merits of the petition under 37 CFR 1.47(a) is desired, applicant must file a request for reconsideration within **TWO (2) MONTHS** from the mail date of this Decision. Any reconsideration request should include a cover letter entitled "Renewed Petition Under 37 CFR 1.47(a)." Extensions of time are available under 37 CFR 1.136(a). Failure to timely file the proper response will result in ABANDONMENT.

Any further correspondence with respect to this matter should be addressed to the Mail Stop PCT, Commissioner for Patents, Office of PCT Legal Administration, P.O. Box 1450, Alexandria, Virginia 22313-1450, with the contents of the letter marked to the attention of the Office of PCT Legal Administration.

Rafael Bacares
PCT Legal Examiner
PCT Legal Office
Telephone: (571) 272-3276
Facsimile: (571) 273-0459

05 JUL 2006

#7

UNITED STATES PATENT AND TRADEMARK OFFICE

COMMISSIONER FOR PATENTS
UNITED STATES PATENT AND TRADEMARK OFFICE
P.O BOX 1450
ALEXANDRIA, VA 22313-1450
www.uspto.gov

Dilworth & Barrese, LLP
333 Earle Ovington Boulevard, Suite 702
Uniondale, New York 11553

In re Application of	DECISION ON RENEWED
Max SEGERLJUNG ET AL	
PCT No.: PCT/SE2003/001073	
Application No: 10/521,281	
Int. Filing Date: 23 June 2003	PETITION UNDER
Priority Date: 15 July 2002	
Attorney's Docket No.: 821-67	
For: A VEHICLE AND A METHOD FOR	
CONTROLLING STEERING THEREOF	37 CFR 1.47(a)

This is in response to the " RENEWED PETITION UNDER 37 C.F.R. §1.47(a)" filed on 30 May 2006.

BACKGROUND

In a decision from this Office on 27 January 2006, the initial petition under 37 CFR 1.47(a) was dismissed. The decision stated that it has not been sufficiently demonstrated that a copy of the application papers (specification, including claims, drawings) were presented to the nonsigning inventor as required by MPEP Section 409.03(d). Accordingly, the petition did not include sufficient factual proof that Ms. Johanna Dahlstrom, (executor of the estate of the deceased inventor, Kurt Dahlstrom) refused to sign the required papers.

On 30 May 2006, applicant submitted a "Renewed Petition Under 37 CFR 1.47(a)" requesting reconsideration of the Office's decision of 27 January 2006.

DISCUSSION

A petition under 37 CFR 1.47(a) must be accompanied by: (1) the fee under 37 CFR 1.17(h), (2) factual proof that the missing joint inventor refuses to execute the application or cannot be reached after diligent effort, (3) a statement of the last known address of the missing inventor, and (4) an oath or declaration by the 37 CFR 1.47(a) applicant on his or her own behalf and on behalf of the non-signing joint inventor.

The renewed petition of 30 May 2006 has satisfied the requirements under 37 CFR 1.47(a).

Jan Olsson's averments do sufficiently demonstrate that a *bona fide* attempt was made to present a copy of the application papers (specification, including claims, drawings, and oath or declaration) to the nonsigning executor (legal representative) for her signature as stipulated under MPEP 409.03(d). In this instance, the application papers were sent to Ms. Dahlstrom on September 23, 2005 and on March 06, 2006 another copy of the declaration and she has not responded. The conduct of Ms. Dahlstrom is interpreted as a refusal to sign the required papers. Consequently, the current record does sufficiently establish that Ms. Dahlstrom refusal to join in the application because petitioner has shown a *bona fide* attempt was made to deliver the complete application to her and that she refused to sign the required papers.

Petitioner has now filed a properly executed declaration complying with 37 CFR 1.497(a)(3).

Petitioner has now satisfied items (1), (2), (3), and (4) under 37 CFR 1.47(a), thus completing the requirements under 37 CFR 1.47(a).

CONCLUSION

The petition under 37 CFR 1.47(a) is **GRANTED**.

The Application Division and the International Division are authorized to accept the application as a 37 CFR 1.47(a) application and to mail a filing receipt. The application will be given a 35 U.S.C. 371(c) date of **30 May 2006.**

As provided in 37 CFR 1.47(a), a notice of the filing of this application will be forwarded to the non-signing inventor at his last known address of record.

A notice of the filing of the application under 37 CFR 1.47(a) will be published in the Official Gazette.

This application is being returned to the United States Designated/Elected Office (DO/EO/US) for continued processing under 35 U.S.C. 371.

Rafael Bacares
PCT Legal Examiner
PCT Legal Office
Telephone: (571) 272-3672
Facsimile: (571) 273-0459

UNITED STATES PATENT AND TRADEMARK OFFICE

UNITED STATES DEPARTMENT OF COMMERCE
United States Patent and Trademark Office
Address: COMMISSIONER FOR PATENTS
P.O. Box 1450
Alexandria, Virginia 22313-1450
www.uspto.gov

APPLICATION NO.	FILING DATE	FIRST NAMED INVENTOR	ATTORNEY DOCKET NO.	CONFIRMATION NO.
10/521,283	02/28/2005	Qiu Taiquing	067538-5190US	1742

EXAMINER
ROBINSON, DANIEL LEON

ART UNIT	PAPER NUMBER
3742	

MAIL DATE	DELIVERY MODE
07/31/2008	PAPER

7590 07/31/2008
MORGAN, LEWIS & BOCKIUS, LLP.
2 PALO ALTO SQUARE
3000 EL CAMINO REAL
PALO ALTO, CA 94306

DECISION DISMISSING PETITION UNDER 37 CFR 1.138(d)

The declaration of express abandonment will not be recognized

This is in response to the petition under 37 CFR 1.138(d), requesting for a refund of any previously paid search fee and excess claims fee in the above-identified application.

The petition is dismissed.

The express abandonment will **not** be recognized for the reason(s) indicated below:

1. ☐ The petition was not filed in sufficient time to permit the appropriate officials to recognize the abandonment before an examination has been made of the application. See 37 CFR 1.138(d).

2. ☐ The petition was not signed by a party authorized by 37 CFR 1.33(b)(1), (3) or (4).

3. ☒ The application is not an application filed under 35 U.S.C. 111(a) on or after December 8, 2004.

4. ☐ The petition for express abandonment under 1.138(d) is dismissed because the applicant did not pay any search fee and excess claims fees in the above-identified application.

Telephone inquiries should be directed to the Office of Data Management at (571) 272-4200.

Betty Powell

Patent Publication Branch
Office of Data Management

FORM PET651D (Rev. 08/07)

15 JUN 2005

#2

UNITED STATES PATENT AND TRADEMARK OFFICE

COMMISSIONER FOR PATENTS
UNITED STATES PATENT AND TRADEMARK OFFICE
P.O. BOX 1450
ALEXANDRIA, VA 22313-1450
www.uspto.gov

Bozicevic Field & Francis LLP
1900 University Avenue, Suite 200
East Palo Alto, CA 94303

In re Application of	:	
YOON, Ho Sung, et al.	:	
U.S. Application No.: 10/521,284	:	
PCT No.: PCT/KR03/01428	:	
Int. Filing Date: 18 July 2003	:	DECISION
Priority Date: 19 July 2002	:	
For: EXTERNAL PRESSURE TYPE ...	:	
PREPARING THE SAME	:	

This application is before the Office of PCT Legal Administration for consideration of issues arising under 35 U.S.C. §371.

BACKGROUND

On 18 July 2003, applicant filed international application PCT/KR03/01428, claiming a priority date of 19 July 2002. The thirty-month period for paying the basic national fee in the United States expired at midnight on 19 January 2005.

On 14 January 2005, a Transmittal Letter to the United States Designated/Elected Office accompanied by the basic national fee was filed in the above international application. It was assigned serial number 10/521,284

On 18 January 2005, another Transmittal Letter to the United States Designated/Elected Office was submitted, accompanied by the basic national fee and a declaration of the inventors. It was originally assigned 10/521,680.

DISCUSSION

As is evident from the above recited facts, two sets of papers to enter the national stage have been submitted for international application number PCT/KR03/01428 (United States application numbers 10/521,284 and 10/521,680). The end result for an international application designating the United States of America is a single U.S. national stage application. Therefore, the submission of two sets of national stage papers to enter the United States was improper. The papers from 10/521,680 have been placed in application 10/521,284.

As the documents filed on 18 January 2005 included a declaration and power of attorney executed by the inventors, the correspondence address for the combined application file 10/521,284 is Sheridan Ross in Denver, Colorado.

Application No.: 10/521,284

Application Number 10/521,680 has been cancelled. All the papers from 10/521,680 have been transferred to the file of application number 10/521,284.

The $1000 paid on 14 January 2005 will be credited to Deposit Account 50-0815.

CONCLUSION

This application is being forwarded to the United States Designated/Elected Office (DO/EO/US) for further national stage processing. Applicant should use application number 10/521,284 in all future communications with the Patent and Trademark Office regarding the U.S. National stage of international application PCT/KR03/01428.

Erin M. Pender

Erin M. Pender
Attorney Advisor
PCT Legal Administration

Telephone: 571-272-3292
Facsimile: 571-273-0459

cc: SHERIDAN ROSS PC
1560 BROADWAY
SUITE 1200
DENVER CO 80202

05 SEP 2006

UNITED STATES PATENT AND TRADEMARK OFFICE

COMMISSIONER FOR PATENTS
UNITED STATES PATENT AND TRADEMARK OFFICE
P.O. BOX 1450
ALEXANDRIA, VA 22313-1450
www.uspto.gov

Warn, Hoffmann, Miller & LaLone, P.C.
P.O. Box 70098
Rochester Hills, MI 48307

In re Application of STEEN et al	:	
U.S. Application No.: 10/521,286	:	
PCT Application No.: PCT/US03/22247	:	DECISION
Int. Filing Date: 16 July 2003	:	
Priority Date Claimed: 16 July 2002	:	
Attorney Docket No.: SCH-00059-US2	:	
For: WHITE LED HEADLIGHT	:	

This is in response to applicant's "Petition for Entering an Oath or Declaration When the Inventor Refuses to Sign Under 37 C.F.R. § 1.47(A)" filed 14 December 2005.

BACKGROUND

On 16 July 2003, applicant filed international application PCT/US03/22247, which claimed priority of an earlier United States application filed 16 July 2002. The thirty-month period for paying the basic national fee in the United States expired on 16 January 2005.

On 14 January 2005, applicant filed national stage papers in the United States Designated/Elected Office (DO/EO/US). The submission was accompanied by, *inter alia*, the basic national fee required by 35 U.S.C. 371(c)(1).

On 11 August 2005, the DO/EO/US mailed a Notification of Missing Requirements Under 35 U.S.C. 371 (Form PCT/DO/EO/905), which indicated that an oath or declaration in compliance with 37 CFR 1.497 must be filed.

On 14 December 2005, applicant filed the present petition under 37 CFR 1.47(a).

DISCUSSION

A petition under 37 CFR 1.47(a) must be accompanied by: (1) an oath or declaration by each applicant on his or her own behalf and on behalf of the nonsigning joint inventors, (2) factual proof that the missing joint inventors refuse to join in the application or cannot be

reached after diligent effort, (3) the fee set forth in §1.17(i), and (4) the last known addresses of the nonsigning joint inventors.

With regard to item (1) above, applicant has submitted a declaration signed by the available inventor on his own behalf and on behalf of the nonsigning inventor.

With regard to item (2) above, MPEP 409.03(d) states in relevant part,

> Where a refusal to sign the application papers is alleged, the circumstances of this refusal must be specified in an affidavit or declaration by the person to whom the refusal was made. Statements by a party not present when an oral refusal is made will not be accepted.
>
> Before a refusal can be alleged, it must be demonstrated that a bona fide attempt was made to present a copy of the application papers (specification, including claims, drawings, and oath or declaration) to the nonsigning inventor for signature. A copy of the application papers should be sent to the last known address of the nonsigning inventor, or, if the nonsigning inventor is represented by counsel, to the address of the nonsigning inventor's attorney.
>
> When there is an express oral refusal, that fact along with the time and place of the refusal must be stated in the affidavit or declaration. When there is an express written refusal, a copy of the document evidencing that refusal must be made part of the affidavit or declaration.
>
> When it is concluded by the 37 CFR 1.47 applicant that a nonsigning inventor's conduct constitutes a refusal, all facts upon which that conclusion is based should be stated in the affidavit or declaration. If there is documentary evidence to support facts alleged in the affidavit or declaration, such evidence should be submitted. Whenever a nonsigning inventor gives a reason for refusing to sign the application oath or declaration, that reason should be stated in the affidavit or declaration.

The petition states that joint inventor Ronald Steen refuses to sign the application papers. Petitioner has adequately demonstrated that a bona fide attempt was made to present a copy of the application papers to Steen for signature (see affidavit of Philip Warn, ¶¶6,8). Furthermore, petitioner has sufficiently demonstrated Steen's refusal to sign. In particular, Steen has failed to respond to repeated mailings. Thus, it can be concluded with reasonable certainty that Steen refuses to join in the application.

With regard to item (3) above, applicant is advised that effective 22 November 2004, the fee for a petition under 37 CFR 1.47 increased to $200.00. Any deficiency in the petition fee will be charged to Deposit Account No. 50-1612 as authorized in the petition.

With regard to item (4) above, the petition states the last known address of the nonsigning inventor.

CONCLUSION

For the reasons above, the petition under 37 CFR 1.47(a) is GRANTED.

The application has an International Filing Date under 35 U.S.C. 363 of 16 July 2003, and a date under 35 U.S.C. 371(c)(1), (c)(2), and (c)(4) of 14 December 2005.

As set forth in 37 CFR 1.47(a), a notice of the filing of this application will be forwarded to the nonsigning inventor at the last known address of record and will be published in the *Official Gazette*.

This application is being forwarded to the United States Designated/Elected Office (DO/EO/US) for further processing in accordance with this decision.

Bryan Tung
PCT Legal Examiner
PCT Legal Office

Telephone: 571-272-3303
Facsimile: 571-273-0459

UNITED STATES PATENT AND TRADEMARK OFFICE

UNITED STATES DEPARTMENT OF COMMERCE
United States Patent and Trademark Office
Address: COMMISSIONER FOR PATENTS
P.O. Box 1450
Alexandria, Virginia 22313-1450
www.uspto.gov

HOWREY LLP
C/O IP DOCKETING DEPARTMENT
2941 FAIRVIEW PARK DRIVE SUITE 200
FALLS CHURCH, VA 22042

Mail Date: 04/21/2010

Applicant	: Stanislaw Flasinski	: DECISION ON REQUEST FOR
Patent Number	: 7615678	: RECALCULATION of PATENT
Issue Date	: 11/10/2009	: TERM ADJUSTMENT IN VIEW
Appliction No	: 10/521,288	: OF WYETH AND NOTICE OF INTENT TO
Filed	: 01/14/2005	: ISSUE CERTIFICATE OF CORRECTION
		:

The Request for Recalculation is **GRANTED** to the extent indicated.

The patent term adjustment has been determined to be **1169** days. The USPTO will *sua sponte* issue a certificate of correction reflecting the amount of PTA days determined by the recalculation.

Prior to the issuance of the certificate of correction, the USPTO will afford patentee an opportunity to be heard and request reconsideration. Accordingly, patentee has **one month or thirty (30) days**, whichever is longer, to file a request for reconsideration of this patent term adjustment calculation. See 35 U.S.C. 154(b)(3)(B)(ii) and 37 CFR 1.322(a)(4). No extensions of time will be granted under 37 CFR 1.136.

Patentee should use document code PET.OP if electronically filing a request for reconsideration of this patent term adjustment calculation. The patentee must also include the information required by 37 CFR 1.705(b)(2) and the fee required by 37 CFR 1.18(e). If patentee does not file a timely request for reconsideration of this patent term adjustment calculation including the information required by 37 CFR 1.705(b)(2) and the fee required by 37 CFR 1.18(e), the USPTO will issue a certificate of correction reflecting the PTA determination noted above.

Patentee should be aware that in order to preserve the right to review in the United States District Court for the District of Columbia of the USPTO patent term adjustment determination, patentee must ensure that he or she also take the steps required under 35 U.S.C. 154(b)(4)(A) in a timely manner. Nothing in the request for recalculation should be construed as providing an alternative time frame for commencing a civil action under 35 U.S.C. 154(b)(4)(A).

Any questions concerning this decision should be directed to the Office of Patent Legal Administration at 571-272-7702.

05 AUG 2005

UNITED STATES PATENT AND TRADEMARK OFFICE

COMMISSIONER FOR PATENTS
UNITED STATES PATENT AND TRADEMARK OFFICE
P.O. BOX 1450
ALEXANDRIA, VA 22313-1450
www.uspto.gov

Thomas R. Savitsky
Novartis
Corporate Intellectual Property
One Health Plaza, Building 104
East Hanover, NJ 07936-1080

In re Application of	:	
BRINKMANN, et al.	:	
Application No.: 10/521,297	:	DECISION ON PETITION
PCT No.: PCT/EP03/08085	:	
Int. Filing Date: 23 July 2003	:	UNDER 37 CFR 1.181
Priority Date: 24 July 2002	:	
For: USE OF S1P RECEPTOR AGONISTS	:	
IN HEART DISEASES	:	

This is a decision on applicant's "Petition to Correct Filing Date/Response to Notice of Acceptance of Application" filed 14 July 2005 in the United States Patent and Trademark Office (USPTO). The request is being treated as a petition under 37 CFR 1.181. No petition fee is due.

BACKGROUND

On 14 January 2005, applicant filed a transmittal letter for entry into the national stage in the United States which was accompanied by the requisite basic national fee as required by 35 U.S.C. 371(c)(1); a first preliminary amendment and an unexecuted declaration of the inventors.

On 17 May 2005, applicant filed an executed combined declaration and power of attorney and information disclosure statement.

On 21 June 2005, applicant was mailed a "Notification of Acceptance" (Form PCT/DO/EO/903) indicating a 371 date of receipt of the 35 U.S.C. 371(c)(1), (c)(2) and (c)(4) requirements as 14 January 2005.

On 14 July 2005, applicant filed the present petition claiming that the 371 requirements were satisfied on 17 May 2005.

DISCUSSION

Applicant has provided a legible copy of the receipt postcard which shows a USPTO date stamp, "JC10 Rec'd PCT/PTO 17 May 2005" and clearly identifies, "Executed Decl. - Fee $130" as well as listing the serial number and attorney docket number. The evidence is sufficient to establish that the combined declaration and power of attorney for this application was received in the USPTO on 17 May 2005.

CONCLUSION

Applicant's petition under 37 CFR 1.181 is **GRANTED**.

The application will be given an international filing date of 23 July 2003 under 35 U.S.C. 363 and a date of **17 May 2005** under 35 U.S.C. 371(c)(1), (c)(2) and (c)(4).

The "Notification of Acceptance of Application Under 35 U.S.C. 371 and 37 CFR 1.494 or 1.495" (Form PCT/DO/EO/903) mailed 21 June 2005 indicating a date of 14 January 2005 under 35 U.S.C. 371(c) is hereby **VACATED**.

This application is being returned to the United States Designated/Elected Office (US/DO/EO) for further processing in accordance with this decision, namely the issuance of a "Notification of Acceptance of Application Under 35 U.S.C. 371 and 37 CFR 1.494 or 1.495" (Form PCT/DO/EO/903) and a corrected filing receipt indicating the correct 371 date as detailed above.

Derek A. Putonen
Attorney Advisor
Office of PCT Legal Administration
Tel: (571) 272-3294
Fax: (571) 273-0459

SPE RESPONSE FOR CERTIFICATE OF CORRECTION

Paper No.: _____

DATE : March 3, 2010

TO SPE OF : ART UNIT 1654

SUBJECT : Request for Certificate of Correction for Appl. No.: 10521298 Patent No.: 7534870

Please respond to this request for a certificate of correction within 7 days.

FOR IFW FILES:

Please review the requested changes/corrections as shown in the **COCIN** document(s) in the IFW application image. No new matter should be introduced, nor should the scope or meaning of the claims be changed.

Please complete the response (see below) and forward the completed response to scanning using document code **COCX**.

FOR PAPER FILES:

Please review the requested changes/corrections as shown in the attached certificate of correction. Please complete this form (see below) and forward it with the file to:

Certificates of Correction Branch (CofC)
Randolph Square – 9D40-C
Palm Location 7580

Certificates of Correction Branch

703-756-1573

Thank You For Your Assistance

The request for issuing the above-identified correction(s) is hereby:
Note your decision on the appropriate box.

- [x] **Approved** — **All** changes apply.
- [ ] **Approved in Part** — Specify below which changes **do not** apply.
- [ ] **Denied** — State the reasons for denial below.

Comments: _____

Cecilia Tsay 1654

SPE **Art Unit**

06 APR 2006

UNITED STATES PATENT AND TRADEMARK OFFICE

Commissioner for Patents
United States Patent and Trademark Office
P.O. Box 1450
Alexandria, VA 22313-1450
www.uspto.gov

NOVARTIS
CORPORATE INTELLECTUAL PROPERTY
ONE HEALTH PLAZA 104/3
EAST HANOVER NJ 07936-1080

In re Application of	:	DECISION
BARANOWSKA-KORTYLEWICZ	:	
Application No.: 10/521,299	:	
PCT No.: PCT/IB03/03257	:	
Int. Filing Date: 17 July 2003	:	
Priority Date: 19 July 2002	:	
Attorney Docket No.: ON/4-32590A	:	
For: ENHANCING THE EFFECT OF	:	
RADIOIMMUNOTHERAPY IN THE	:	
TREATMENT OF TUMORS	:	

This decision is in response to applicants' petition under 37 CFR 1.137(b) filed in the United States Patent and Trademark Office (USPTO) on 14 February 2006.

BACKGROUND

On 17 July 2003, applicants filed international application PCT/IB03/03257, which designated the U.S. and claimed a priority date of 19 July 2002. A copy of the international application was communicated to the USPTO from the International Bureau on 29 January 2004. The thirty-month period for paying the basic national fee in the United States expired at midnight on 19 January 2005.

On 14 January 2005, applicants filed a submission for entry into the national stage in the United States which was accompanied by, *inter alia*, the U.S. Basic National Fee.

On 20 June 2005, the United States Designated/Elected Office (DO/EO/US) mailed a NOTIFICATION OF MISSING REQUIREMENTS UNDER 35 U.S.C. 371 (Form PCT/DO/EO/905) indicating, *inter alia*, that applicant must provide an oath or declaration of the inventors in compliance with 37 CFR 1.497(a)-(b) and the surcharge under 37 CFR 1.492(e) for providing the oath or declaration later than thirty months from the priority date. The NOTIFICATION set a two-month extendable period for reply.

On 14 February 2006, applicants submitted the instant petition under 37 CFR 1.137(b), which was accompanied by, *inter alia*, a declaration of inventors.

DISCUSSION

A petition to revive the present application under 37 CFR 1.137(b) must include:
(1) The required reply;
(2) The petition fee;
(3) A statement that the entire delay in filing the required reply from the due date for the reply until the filing of a grantable petition was unintentional.

As to item (1), the declaration of inventors filed 14 February 206 is not in compliance with 37 CFR 1.497(a)-(b). The last named inventor is identified in the international application as Christian Pietras while the declaration of inventors identifies him as Kristian Pietras. A satisfactory explanation of the difference between the first name of the inventor as indicated on the declaration and in the international application has not been provided. Nor has a grantable petition under 37 CFR 1.182 regarding a change of name of the inventor or a grantable petition under 37 CFR 1.497(d) if a change of inventorship is being made from the inventorship of the application as indicated in the international application been provided.

As to item (2), applicant submitted the petition fee on 14 February 2006.

As to item (3), a grantable petition has not yet been filed.

CONCLUSION

The petition under 37 CFR 1.137(b) is **DISMISSED**, without prejudice, for the reasons set forth above.

Applicant is hereby given the time limit of **TWO (2) MONTHS** from the mail date of this communication in order to file a proper response. A proper response would be a new oath(s) or declaration(s) properly identifying the inventor and signed by the inventor, or an acceptable explanation of any typographical or transliteration error in the last name of the inventor as indicated in the international application if this is the case, or a petition under 37 CFR 1.182 (see MPEP § 605.04(c)) if the inventor has changed his name, or a petition under 37 CFR 1.497(d) if a change of inventorship is being made from the inventorship of the application as indicated in the international application. Extensions of time under 37 CFR 1.136(a) are available.

Please direct further correspondence with respect to this matter to Mail Stop PCT, Commissioner for Patents, Office of PCT Legal Administration, P.O. Box 1450, Alexandria, Virginia 22313-1450, with the contents of the letter marked to the attention of the Office of PCT Legal Administration.

Daniel Stemmer
Legal Examiner
PCT Legal Affairs

Office of Patent Cooperation Treaty
Legal Administration
Telephone: (571) 272-3301
Facsimile: (571) 273-0459

#7

UNITED STATES PATENT AND TRADEMARK OFFICE

Commissioner for Patents
United States Patent and Trademark Office
P.O. Box 1450
Alexandria, VA 22313-1450
www.uspto.gov

03 AUG 2006

NOVARTIS
CORPORATE INTELLECTUAL PROPERTY
ONE HEALTH PLAZA 104/3
EAST HANOVER NJ 07936-1080

In re Application of	:	DECISION
BARANOWSKA-KORTYLEWICZ et al.	:	
Application No.: 10/521,299	:	
PCT No.: PCT/IB03/03257	:	
Int. Filing Date: 17 July 2003	:	
Priority Date: 19 July 2002	:	
Attorney Docket No.: ON/4-32590A	:	
For: ENHANCING THE EFFECT OF	:	
RADIOIMMUNOTHERAPY IN THE	:	
TREATMENT OF TUMORS	:	

This decision is in response to applicants' "Response to Decision of April 6, 2006 made in Response to Applicant's Petition under 37 C.F.R. 1.137(b)" filed in the United States Patent and Trademark Office (USPTO) on 18 April 2006.

BACKGROUND

On 17 July 2003, applicants filed international application PCT/IB03/03257, which designated the U.S. and claimed a priority date of 19 July 2002. A copy of the international application was communicated to the USPTO from the International Bureau on 29 January 2004. The thirty-month period for paying the basic national fee in the United States expired at midnight on 19 January 2005.

On 14 January 2005, applicants filed a submission for entry into the national stage in the United States which was accompanied by, *inter alia*, the U.S. Basic National Fee.

On 20 June 2005, the United States Designated/Elected Office (DO/EO/US) mailed a NOTIFICATION OF MISSING REQUIREMENTS UNDER 35 U.S.C. 371 (Form PCT/DO/EO/905) indicating, *inter alia*, that applicant must provide an oath or declaration of the inventors in compliance with 37 CFR 1.497(a)-(b) and the surcharge under 37 CFR 1.492(e) for providing the oath or declaration later than thirty months from the priority date. The NOTIFICATION set a two-month extendable period for reply.

On 14 February 2006, applicants submitted a petition under 37 CFR 1.137(b), which was accompanied by, *inter alia*, a declaration of inventors.

On 06 April 2006, a decision was mailed dismissing applicants' petition under 37 CFR 1.137(b) because the required reply had not been provided. Specifically, it was noted that the declaration of inventors filed 14 February 206 was not in compliance with 37 CFR 1.497(a)-(b) because the last named inventor is identified in the international application as Christian Pietras while the declaration of inventors identifies him as Kristian Pietras.

On 18 April 2006, applicants submitted the instant "Response to Decision of April 6, 2006 made in Response to Applicant's Petition under 37 C.F.R. 1.137(b)".

DISCUSSION

A petition to revive the present application under 37 CFR 1.137(b) must include:
(1) The required reply;
(2) The petition fee;
(3) A statement that the entire delay in filing the required reply from the due date for the reply until the filing of a grantable petition was unintentional.

As to item (1), applicants' explanation of the difference in the spelling of Kristian Pietras's name is accepted and noted for the record. The declaration of inventors filed 14 February 206 is in compliance with 37 CFR 1.497(a)-(b).

As to item (2), applicant submitted the petition fee on 14 February 2006.

As to item (3), the required statement has been provided.

CONCLUSION

The petition under 37 CFR 1.137(b) is **GRANTED** for the reasons set forth above.

Please direct further correspondence with respect to this matter to Mail Stop PCT, Commissioner for Patents, Office of PCT Legal Administration, P.O. Box 1450, Alexandria, Virginia 22313-1450, with the contents of the letter marked to the attention of the Office of PCT Legal Administration.

This application is being forwarded to the National Stage Processing Branch of the Office of PCT Operations to continue national stage processing of the application.

Daniel Stemmer
Legal Examiner
PCT Legal Affairs
Office of Patent Cooperation Treaty
Legal Administration
Telephone: (571) 272-3301; Facsimile: (571) 273-0459

UNITED STATES PATENT AND TRADEMARK OFFICE

Commissioner for Patents
United States Patent and Trademark Office
P.O. Box 1450
Alexandria, VA 22313-1450
www.uspto.gov

Professor N A Warner
40 High House Drive
Rednal
Birmingham B45 8ET GB
UNITED KINGDOM

COPY MAILED

FEB 09 2007

OFFICE OF PETITIONS

In re Application of Warner :
Application No. 10/521,307 : Decision on Petition
Filing Date: January 13, 2005 :
For: Continuous Steelmaking Plant :

This is a decision on the petition filed December 26, 2006, under 37 CFR 1.181 to withdraw the holding of abandonment of the above-identified application.

The petition is **dismissed.**

The above-identified application became abandoned for failure to reply in a timely manner to the Office action under Ex parte Quayle, 1935 Dec. Comm'r Pat. 11 (1935), mailed April 24, 2006, which set a shortened statutory period for reply of two (2) months. An extension of time under the provisions of 37 CFR 1.136(a) was not obtained. Accordingly, the above-identified application became abandoned on June 25, 2006.

Petitioner contends a timely reply was filed May 9, 2006. Petitioner has supplied a copy of a mail label and an unofficial handwritten notation indicating the package was delivered before 8:01 on May 9, 2006. The Office went to the Royal Mail's website and, using its "Track and Trace" service, verified the package was delivered before 8:01 on May 9, 2006.

Apparently petitioner emailed copies of the May 9, 2006 papers to the examiner on November 27, 2006. However, a copy of the papers was not placed in the file. Petitioner should submit a new copy of the papers.

A review of Office records indicates petitioner has filed several applications and has several patents. The copy of the papers allegedly filed May 9, 2006, should include evidence to establish the package could not have contained papers or fees directed to any other application or patent. Petitioner should note petitioner bears the burden of proof regarding the exact identity of the papers filed May 9, 2006.

Any request for reconsideration must be submitted within TWO (2) MONTHS from the mail date of this decision. No further petition fee is required for the request. Extensions of time under 37 CFR 1.136(a) are NOT permitted. The reconsideration request should include a cover letter entitled "Renewed Petition under 37 CFR 1.181."

Further correspondence with respect to this matter should be addressed as follows:

By mail: Mail Stop Petition
Commissioner for Patents
P.O. Box 1450
Alexandria, VA 22313-1450

By facsimile: (571) 273-8300
Attn: Office of Petitions

By hand: U.S. Patent and Trademark Office
Customer Service Window
Randolph Building
401 Dulany Street
Alexandria, VA 22314

Telephone inquiries regarding this communication should be directed to Petitions Attorney Steven Brantley at (571) 272-3203.

Charles Steven Brantley
Senior Petitions Attorney
Office of Petitions

UNITED STATES PATENT AND TRADEMARK OFFICE

Commissioner for Patents
United States Patent and Trademark Office
P.O. Box 1450
Alexandria, VA 22313-1450
www.uspto.gov

Professor N A Warner
40 High House Drive
Rednal
Birmingham B45 8ET GB
UNITED KINGDOM

COPY MAILED

JUL 26 2007

OFFICE OF PETITIONS

In re Application of Warner :
Application No. 10/521,307 : Decision on Petition
Filing Date: January 13, 2005 :
For: Continuous Steelmaking Plant :

This is a decision on the petition filed March 8, 2007, under 37 CFR 1.181 to withdraw the holding of abandonment of the above-identified application.

The petition is **granted.**

The above-identified application became abandoned for failure to reply in a timely manner to the Office action under Ex parte Quayle, 1935 Dec. Comm'r Pat. 11 (1935), mailed April 24, 2006, which set a shortened statutory period for reply of two (2) months. An extension of time under the provisions of 37 CFR 1.136(a) was not obtained. Accordingly, the above-identified application became abandoned on June 25, 2006.

Petitioner contends a timely reply was filed May 9, 2006.

In light of the mail label provided by petitioner, the copy of two emails provided by petitioner, and after a review of the procedural history for all other applications listing Noel Warner as an inventor, the Office has determined the showing is sufficient to justify withdrawing the holding of abandonment.

The Notice of Abandonment is hereby vacated and the holding of abandonment withdrawn.

Technology Center Art Unit 1742 will be informed of the instant decision and the examiner will consider the copy of the amendment filed March 8, 2007, in due course.

Telephone inquiries regarding this communication should be directed to Petitions Attorney Steven Brantley at (571) 272-3203.

Charles Steven Brantley
Senior Petitions Attorney
Office of Petitions

UNITED STATES PATENT AND TRADEMARK OFFICE

Commissioner for Patents
United States Patent and Trademark Office
P.O. Box 1450
Alexandria, VA 22313-1450
www.uspto.gov

MORRISON & FOERSTER, LLP
1650 TYSONS BOULEVARD, SUITE 400
MCLEAN, VA 22102

COPY MAILED

NOV 07 2007

OFFICE OF PETITIONS

In re Application of
LEITGEB, et al.
Application No. 10/521,314
Filed: August 30, 2005
Attorney Docket No. **449122079100**

DECISION ON PETITION
TO WITHDRAW
FROM RECORD

This is a decision on the Request to Withdraw as attorney or agent of record under 37 C.F.R. § 1.36(b), filed May 17, 2007.

The request is **NOT APPROVED** as moot.

A review of the file record indicates that the power of attorney to **MORRISON & FOERSTER, LLP** has been revoked by the assignee of the patent application on July 31, 2007. Accordingly, the request to withdraw under 37 C.F.R. § 1.36(b) is moot.

All future communications from the Office will continue to be directed to the below-listed address until otherwise notified by applicant.

Telephone inquires concerning this decision should be directed to the undersigned at 571-272-7253.

Monica A. Graves
Petitions Examiner
Office of Petitions

cc: **BELL BOYD & LLOYD, LLP**
P.O. BOX 1135
CHICAGO, IL 60690

UNITED STATES PATENT AND TRADEMARK OFFICE

UNITED STATES DEPARTMENT OF COMMERCE
United States Patent and Trademark Office
Address: COMMISSIONER FOR PATENTS
P.O. Box 1450
Alexandria, Virginia 22313-1450
www.uspto.gov

CROWELL & MORING LLP
INTELLECTUAL PROPERTY GROUP
P.O. BOX 14300
WASHINGTON, DC 20044-4300

Mail Date: 04/27/2010

Applicant	: Takashi Nomura	: DECISION ON REQUEST FOR
Patent Number	: 7584049	: RECALCULATION of PATENT
Issue Date	: 09/01/2009	: TERM ADJUSTMENT IN VIEW
Application No	: 10/521,327	: OF WYETH AND NOTICE OF INTENT TO
Filed	: 10/20/2005	: ISSUE CERTIFICATE OF CORRECTION
		:

The Request for Recalculation is **GRANTED** to the extent indicated.

The patent term adjustment has been determined to be **911** days. The USPTO will *sua sponte* issue a certificate of correction reflecting the amount of PTA days determined by the recalculation.

Prior to the issuance of the certificate of correction, the USPTO will afford patentee an opportunity to be heard and request reconsideration. Accordingly, patentee has **one month or thirty (30) days**, whichever is longer, to file a request for reconsideration of this patent term adjustment calculation. See 35 U.S.C. 154(b)(3)(B)(ii) and 37 CFR 1.322(a)(4). No extensions of time will be granted under 37 CFR 1.136.

Patentee should use document code PET.OP if electronically filing a request for reconsideration of this patent term adjustment calculation. The patentee must also include the information required by 37 CFR 1.705(b)(2) and the fee required by 37 CFR 1.18(e). If patentee does not file a timely request for reconsideration of this patent term adjustment calculation including the information required by 37 CFR 1.705(b)(2) and the fee required by 37 CFR 1.18(e), the USPTO will issue a certificate of correction reflecting the PTA determination noted above.

Patentee should be aware that in order to preserve the right to review in the United States District Court for the District of Columbia of the USPTO patent term adjustment determination, patentee must ensure that he or she also take the steps required under 35 U.S.C. 154(b)(4)(A) in a timely manner. Nothing in the request for recalculation should be construed as providing an alternative time frame for commencing a civil action under 35 U.S.C. 154(b)(4)(A).

Any questions concerning this decision should be directed to the Office of Patent Legal Administration at 571-272-7702.

UNITED STATES PATENT AND TRADEMARK OFFICE

Commissioner for Patents
United States Patent and Trademark Office
P.O. Box 1450
Alexandria, VA 22313-1450
www.uspto.gov

WALKER DIGITAL
2 HIGH RIDGE PARK
STAMFORD, CT 06905

COPY MAILED
OCT 0 2 2006
OFFICE OF PETITIONS

In re Application of

Walker, et al. :

Application No. 09/521,357

: DECISION ON PETITION

Filed: March 8, 2000

:

Attorney Docket No. 96-149x

This is a decision on the petition under 37 CFR 1.137(b), filed May 1, 2006, to revive the above-identified application.

The petition is **GRANTED**.

The above-cited application became abandoned for failure to file a proper reply in a timely manner to the final Office action mailed April 6, 2005, which set a shortened statutory period for reply of three (3) months from its mailing date. A Notice of Appeal was filed on August 10, 2005, with a request for an extension of time within the first month. No further responses were filed within the allowable period. The application became abandoned on October 11, 2005.

The Request for Continued Examination filed May 1, 2006, is noted and made of record

Deposit account 50-0271 will be charged $1,500.00 for the petition fee and $790.00 for the Request for Continued Examination Fee.

The application is being forwarded to Technology Center 3600, GAU 3628 for further processing.

Telephone inquiries concerning this decision should be directed to the undersigned at (571) 272-3222.

Kenya A. McLaughlin
Petitions Attorney
Office of Petitions

22 NOV 2005

#6

UNITED STATES PATENT AND TRADEMARK OFFICE

COMMISSIONER FOR PATENTS
UNITED STATES PATENT AND TRADEMARK OFFICE
P.O. BOX 1450
ALEXANDRIA, VA 22313-1450
www.uspto.gov

Baker & Hostetler LLP
Washington Square, Suite 1100
1050 Connecticut Avenue, N.W.
Washington, DC 20036

In re Application of HERZ et al	:	
U.S. Application No.: 10/521,358	:	
PCT Application No.: PCT/EP03/07653	:	COMMUNICATION
Int. Filing Date: 15 July 2003	:	
Priority Date Claimed: 16 July 2002	:	
Attorney Docket No.: 87305-0044	:	
For: SAMPLE TREATMENT STATION	:	

A review of the application file reveals that a proper declaration was filed on 14 January 2005.

Accordingly, the final paragraph of the decision mailed 11 August 2005 is hereby VACATED.

The application has an International Filing Date under 35 U.S.C. 363 of 15 July 2003, and a date under 35 U.S.C. 371(c)(1), (c)(2), and (c)(4) of 26 July 2005.

This application is being forwarded to the United States Designated/Elected Office (DO/EO/US) for further processing in accordance with this decision.

Bryan Tung
PCT Legal Examiner
PCT Legal Office

Telephone: 571-272-3303
Facsimile: 571-273-0459

11 AUG 2005

UNITED STATES PATENT AND TRADEMARK OFFICE

COMMISSIONER FOR PATENTS
UNITED STATES PATENT AND TRADEMARK OFFICE
P.O. BOX 1450
ALEXANDRIA, VA 22313-1450
www.uspto.gov

Baker & Hostetler LLP
Washington Square, Suite 1100
1050 Connecticut Avenue, N.W.
Washington, DC 20036

In re Application of HERZ et al	:	
U.S. Application No.: 10/521,358	:	
PCT Application No.: PCT/EP03/07653	:	DECISION
Int. Filing Date: 15 July 2003	:	
Priority Date Claimed: 16 July 2002	:	
Attorney Docket No.: 87305-0044	:	
For: SAMPLE TREATMENT STATION	:	

This is in response to applicant's "Petition for Revival of an International Application for Patent Designating the U.S. Abandoned Unintentionally Under 37 CFR 1.137(b)" filed 26 July 2005.

BACKGROUND

On 15 July 2003, applicant filed international application PCT/EP03/07653, which claimed priority of an earlier Germany application filed 16 July 2002. A copy of the international application was communicated to the USPTO from the International Bureau on 22 January 2004. The thirty-month period for paying the basic national fee in the United States expired on 16 January 2005.

On 14 January 2005, applicant filed purported national stage papers in the United States Designated/Elected Office (DO/EO/US). The submission was not accompanied by, *inter alia*, the basic national fee required by 35 U.S.C. 371(c)(1).

International application PCT/EP03/07653 became abandoned as to the United States for failure to timely pay the basic national fee.

On 26 July 2005, applicant filed the present petition under 37 CFR 1.137(b).

DISCUSSION

Under 37 CFR 1.137(b), a petition requesting that an application be revived on the grounds of unintentional abandonment must be accompanied by: (1) the required reply unless

previously filed, (2) the petition fee as set forth in 37 CFR 1.17(m), (3) a statement that the entire delay in filing the required reply from the due date for the reply until the filing of a grantable petition was unintentional, and (4) a terminal disclaimer if the application was filed before 08 June 1995.

With regard to item (1), applicant has provided the required basic national fee under 35 U.S.C. 371.

With regard to item (2), applicant has provided the required petition fee.

With regard to item (3), applicant has provided the required statement.

With regard to item (4), because the international application was filed after 08 June 1995, no terminal disclaimer is required.

CONCLUSION

For the reasons above, the petition under 37 CFR 1.137(b) is GRANTED.

This application is being forwarded to the United States Designated/Elected Office (DO/EO/US) for further processing in accordance with this decision, including preparation and mailing of a Notification of Missing Requirements under 35 U.S.C. 371 (Form PCT/DO/EO/905) indicating that an oath or declaration in compliance with 37 CFR 1.497 must be filed.

Bryan Tung
PCT Legal Examiner
PCT Legal Office

Telephone: 571-272-3303
Facsimile: 571-273-0459

UNITED STATES PATENT AND TRADEMARK OFFICE

COMMISSIONER FOR PATENTS
UNITED STATES PATENT AND TRADEMARK OFFICE
P.O. BOX 1450
ALEXANDRIA, VA 22313-1450
www.uspto.gov

Paper No.

HOWREY LLP-EU
C/O IP DOCKETING DEPARTMENT
2941 FAIRVIEW PARK DR.,
SUITE 200
FALLS CHURCH VA 22042

COPY MAILED

JUL 29 2008

In re Application of	:	
Bieker et al.	:	DECISION ON
Application No. 10/521,361	:	PETITION
Filed: January 14, 2005	:	
Atty Docket No. 01117.0010.	:	
PCUS00	:	

This is a decision on the "PETITION TO WITHDRAW HOLDING OF ABANDONMENT PURSUANT TO 37 CFR 1.181," filed January 18, 2008. Alternatively, applicant petitions for revival of the application under 37 CFR 1.137(b). In addition, applicant requests refund of the issue fee and publication fee paid on November 14, 2007.

The above-identified application became abandoned for failure to pay the Issue Fee and Publication Fee within three months of the mailing date, August 14, 2007, of the Notice of Allowance and Fee(s) Due. This Office action set a three-month nonextendable statutory period for reply. No response considered received, the above-identified application became abandoned. A courtesy Notice of Abandonment was mailed on December 11, 2007.

DECISION ON
PETITION TO WITHDRAW HOLDING OF ABANDONMENT

In response, applicant timely filed the instant petition. Applicant states payment of the Issue Fee was timely transmitted to the Office on November 14, 2007. Applicant maintains that the response was sent via facsimile to telephone number 001-571-273-2885 and included a signed Certificate of Transmission as provided for under 37 CFR 1.8. However, applicant acknowledges

that the transmittal identified application No. 10/849,802 and thus, is present in that application.

Consideration of applicant's evidence is unnecessary. A review of the petition and of the record of the misidentified application reveals that the response as applicant maintains it was filed on November 14, 2007 was, in fact, filed on that date but with the wrong application number. Thus, the response (and fees) were associated with the wrong application. Of significance, the response did identify the correct inventor and filing date of the application and otherwise, bore all of the correct identifying information. Accordingly, the error has been corrected. The response (including the issue fee and publication fee) filed November 14, 2007, have been "moved" from the electronic record of the incorrectly identified application to the record of the instant application. The response is considered timely filed, albeit with some incorrect identifying information.

In view thereof, the notice of abandonment mailed December 11, 2007 and the holding of abandonment are hereby **WITHDRAWN**.

The petition under § 1.181 is **GRANTED**.

No fee is required on petition under § 1.181.

Since consideration of the petition under 37 CFR 1.137(b) is unnecessary, no fee for such consideration is being charged.

DECISION ON
REQUEST FOR REFUND

The request for refund is **DENIED**.

Applicant states no basis for their request for refund of the issue fee and publication fee. The issue fee and publication fee were paid as due. These fees were not paid by mistake. Further, these fees were not paid in excess of that required. Pursuant to 37 CFR 1.26(a), a change of purpose after the payment of a fee, such as when a party desires to withdraw a patent filing for which the fee was paid, including an application, an appeal, or a request for an oral hearing, will not entitle a party to a refund of such fee.

As previously stated the issue fee and publication fee have been moved from the record of the misidentified application to the record of this application.

CONCLUSION

The Office of Data Management (formerly known as the Office of Patent Publication) has been advised of this decision. The application is, thereby, forwarded to the technical staff to withdraw the holding of abandonment and for processing of the application into a patent.

Telephone inquiries concerning this decision should be directed to the undersigned at (571) 272-3219.

Nancy Johnson
Senior Petitions Attorney
Office of Petitions

UNITED STATES PATENT AND TRADEMARK OFFICE

UNITED STATES DEPARTMENT OF COMMERCE
United States Patent and Trademark Office
Address: COMMISSIONER FOR PATENTS
P.O. Box 1450
Alexandria, Virginia 22313-1450
www.uspto.gov

HOWREY LLP-EU
C/O IP DOCKETING DEPARTMENT
2941 FAIRVIEW PARK DR., SUITE 200
FALLS CHURCH, VA 22042

Mail Date: 04/21/2010

Applicant	: Guido Bieker	: DECISION ON REQUEST FOR
Patent Number	: 7625030	: RECALCULATION of PATENT
Issue Date	: 12/01/2009	: TERM ADJUSTMENT IN VIEW
Appliction No	: 10/521,361	: OF WYETH AND NOTICE OF INTENT TO
Filed	: 01/14/2005	: ISSUE CERTIFICATE OF CORRECTION
		:

The Request for Recalculation is **GRANTED** to the extent indicated.

The patent term adjustment has been determined to be **818** days. The USPTO will *sua sponte* issue a certificate of correction reflecting the amount of PTA days determined by the recalculation.

Prior to the issuance of the certificate of correction, the USPTO will afford patentee an opportunity to be heard and request reconsideration. Accordingly, patentee has **one month or thirty (30) days**, whichever is longer, to file a request for reconsideration of this patent term adjustment calculation. See 35 U.S.C. 154(b)(3)(B)(ii) and 37 CFR 1.322(a)(4). No extensions of time will be granted under 37 CFR 1.136.

Patentee should use document code PET.OP if electronically filing a request for reconsideration of this patent term adjustment calculation. The patentee must also include the information required by 37 CFR 1.705(b)(2) and the fee required by 37 CFR 1.18(e). If patentee does not file a timely request for reconsideration of this patent term adjustment calculation including the information required by 37 CFR 1.705(b)(2) and the fee required by 37 CFR 1.18(e), the USPTO will issue a certificate of correction reflecting the PTA determination noted above.

Patentee should be aware that in order to preserve the right to review in the United States District Court for the District of Columbia of the USPTO patent term adjustment determination, patentee must ensure that he or she also take the steps required under 35 U.S.C. 154(b)(4)(A) in a timely manner. Nothing in the request for recalculation should be construed as providing an alternative time frame for commencing a civil action under 35 U.S.C. 154(b)(4)(A).

Any questions concerning this decision should be directed to the Office of Patent Legal Administration at 571-272-7702.

UNITED STATES PATENT AND TRADEMARK OFFICE

Commissioner for Patents
United States Patent and Trademark Office
P.O. Box 1450
Alexandria, VA 22313-1450
www.uspto.gov

PERMAN & GREEN
425 POST ROAD
FAIRFIELD, CT 06824

COPY MAILED

JAN 0 4 2008

OFFICE OF PETITIONS

In re Application of

Albert Foucher

Application No. 10/521,366

Filed: August 22, 2005

Attorney Docket No.

DECISION ON PETITION

This is a decision on the petition under 37 CFR §1.137(b), December 10, 2007, to revive the above-identified application.

The petition is **granted**.

This application became abandoned for failure to timely file corrected drawings as required by the Notice of Allowability (the "Notice") mailed July 11, 2007. The Notice set forth a three (3) month statutory period for reply. No response was received within the allowable period. Accordingly, this application became abandoned on October 12, 2007. A Notice of Abandonment was mailed November 7, 2007.

Corrected drawings were received on December 10, 2007.

The application is being directed to the Office of Patent Publications for further processing.

Telephone inquiries concerning this matter may be directed to the undersigned at (571) 272-3222.

Kenya A. McLaughlin
Petitions Attorney
Office of Petitions

20 MAY 2005

UNITED STATES PATENT AND TRADEMARK OFFICE

COMMISSIONER FOR PATENTS
UNITED STATES PATENT AND TRADEMARK OFFICE
P.O. BOX 1450
ALEXANDRIA, VA 22313-1450
www.uspto.gov

IVOR R. ELRIFI
MINTZ, LEVIN, COHN, FERRIS, GLOVSKY & POPEO
666 3rd Avenue
New York, NY 10164-3491

In re Application of:	:	
STAMLER, Jonathan, S., et al.	:	DECISION ON PETITION FOR
U.S. Application No.: 10/521,394	:	REVIVAL OF ABANDONED
PCT No.: PCT/US02/036138	:	APPLICATION UNDER
International Filing Date: 02 December 2002	:	37 CFR 1.137(b)
Priority Date: 06 December 2001	:	
Attorney's Docket No.: 28195-508 NATL	:	
For: PREVENTION OF FLAP NECROSIS IN	:	
PLASTIC SURGERY	:	

The petition for revival under 37 CFR 1.137(b) filed 14 January 2005 in the above-captioned application is hereby **GRANTED** as follows:

Applicants' statement that "the entire delay in filing the required reply from the due date for the required reply until the filing of a grantable petition under 37 CFR 1.137(b) was unintentional" meets the requirements of 37 CFR 1.137(b)(3).

Applicants have now submitted the small entity basic national fee and the requirements of 37 CFR 1.137(b) have been satisfied. Therefore, the request to revive the application is granted as to the national stage in the United States of America.

This application is being returned to the National Stage Processing Division of the Office of PCT Operations for further processing in accordance with this decision, including the issuance of a "Notification Of Missing Requirements" (Form PCT/DO/EO/905) requiring submission of an oath or declaration in compliance with 37 CFR 1.497.

Richard M. Ross
PCT Petitions Attorney
Office Of PCT Legal Administration
Telephone: (571) 272-3296
Facsimile: (571) 273-0459

UNITED STATES PATENT AND TRADEMARK OFFICE

UNITED STATES DEPARTMENT OF COMMERCE
United States Patent and Trademark Office
Address: COMMISSIONER FOR PATENTS
P.O. Box 1450
Alexandria, Virginia 22313-1450
www.uspto.gov

WARE FRESSOLA VAN DER SLUYS & ADOLPHSON, LLP
BRADFORD GREEN, BUILDING 5
755 MAIN STREET, P O BOX 224
MONROE, CT 06468

Mail Date: 04/22/2010

Applicant	: Alfonso Troya	: DECISION ON REQUEST FOR
Patent Number	: 7606333	: RECALCULATION of PATENT
Issue Date	: 10/20/2009	: TERM ADJUSTMENT IN VIEW
Appliction No	: 10/521,396	: OF WYETH AND NOTICE OF INTENT TO
Filed	: 10/21/2005	: ISSUE CERTIFICATE OF CORRECTION
		:

The Request for Recalculation is **GRANTED** to the extent indicated.

The patent term adjustment has been determined to be **939** days. The USPTO will *sua sponte* issue a certificate of correction reflecting the amount of PTA days determined by the recalculation.

Prior to the issuance of the certificate of correction, the USPTO will afford patentee an opportunity to be heard and request reconsideration. Accordingly, patentee has **one month or thirty (30) days**, whichever is longer, to file a request for reconsideration of this patent term adjustment calculation. See 35 U.S.C. 154(b)(3)(B)(ii) and 37 CFR 1.322(a)(4). No extensions of time will be granted under 37 CFR 1.136.

Patentee should use document code PET.OP if electronically filing a request for reconsideration of this patent term adjustment calculation. The patentee must also include the information required by 37 CFR 1.705(b)(2) and the fee required by 37 CFR 1.18(e). If patentee does not file a timely request for reconsideration of this patent term adjustment calculation including the information required by 37 CFR 1.705(b)(2) and the fee required by 37 CFR 1.18(e), the USPTO will issue a certificate of correction reflecting the PTA determination noted above.

Patentee should be aware that in order to preserve the right to review in the United States District Court for the District of Columbia of the USPTO patent term adjustment determination, patentee must ensure that he or she also take the steps required under 35 U.S.C. 154(b)(4)(A) in a timely manner. Nothing in the request for recalculation should be construed as providing an alternative time frame for commencing a civil action under 35 U.S.C. 154(b)(4)(A).

Any questions concerning this decision should be directed to the Office of Patent Legal Administration at 571-272-7702.

UNITED STATES PATENT AND TRADEMARK OFFICE

UNITED STATES DEPARTMENT OF COMMERCE
United States Patent and Trademark Office
Address: COMMISSIONER FOR PATENTS
P.O. Box 1450
Alexandria, Virginia 22313-1450
www.uspto.gov

APPLICATION NO.	FILING DATE	FIRST NAMED INVENTOR	ATTORNEY DOCKET NO.	CONFIRMATION NO.
10/521,402	03/01/2006	Rajeev Shankar Mathur	RLL-274US	1976

7590 02/13/2008

RANBAXY INC.
600 COLLEGE ROAD EAST
SUITE 2100
PRINCETON, NJ 08540

EXAMINER
SOROUSH, ALI

ART UNIT	PAPER NUMBER
1616	

MAIL DATE	DELIVERY MODE
02/13/2008	PAPER

DECISION DISMISSING PETITION UNDER 37 CFR 1.138(d)

The declaration of express abandonment will not be recognized

This is in response to the petition under 37 CFR 1.138(d), requesting for a refund of any previously paid search fee and excess claims fee in the above-identified application.

The petition is dismissed.

The express abandonment will **not** be recognized for the reason(s) indicated below:

1. ☒ The petition was not filed in sufficient time to permit the appropriate officials to recognize the abandonment before an examination has been made of the application. See 37 CFR 1.138(d).

2. ☐ The petition was not signed by a party authorized by 37 CFR 1.33(b)(1), (3) or (4).

3. ☒ The application is not an application filed under 35 U.S.C. 111(a) on or after December 8, 2004.

4. ☐ The petition for express abandonment under 1.138(d) is dismissed because the applicant did not pay any search fee and excess claims fees in the above-identified application.

Telephone inquiries should be directed to the Office of Data Management at (571) 272-4200.

Patent Publication Branch
Office of Data Management

FORM PET651D (Rev. 08/07)

03 JUL 2006

#6

UNITED STATES PATENT AND TRADEMARK OFFICE

Commissioner for Patents
United States Patent and Trademark Office
P.O. Box 1450
Alexandria, VA 22313-1450
www.uspto.gov

David G. Dolezal
Freescale Semiconductor, Inc.
Law Department
7700 W. Parmer Lane
Mail Drop PL02
Austin, TX 78729

In re Application of NEWTON, et al. Application No.: 10/521,417 PCT No.: PCT/EP03/06753 Int. Filing Date: 25 June 2003 Priority Date: 05 July 2002 Attorney Docket No.: SC0978EG For: TRANSMITTER AND RECEIVER GAIN CALIBRATION BY MEANS OF FEED-BACK IN A TRANSCEIVER	COMMUNICATION AND NOTICE OF ABANDONMENT

This communication is in response to applicant's "PETITION UNDER 37 CFR 1.47" filed 03 March 2006 in the United States Patent and Trademark Office (USPTO).

BACKGROUND

On 25 June 2003, applicant filed international application PCT/EP03/06753 which claimed priority to a previous application filed 05 July 2002. Pursuant to 37 CFR 1.495, the deadline for submitting payment of the U.S. Basic National fee was to expire at midnight on 05 January 2005.

On 05 January 2005, applicant filed a transmittal letter for entry into the national stage in the United States, which was accompanied by the requisite basic national fee as required by 35 U.S.C. 371(c)(1); an Information Disclosure Statement and a preliminary amendment.

On 01 July 2005, applicant was mailed a "Notification of Missing Requirements" (Form PCT/DO/EO/905) indicating that an executed oath or declaration of the inventors was required, as well as, payment of the $130.00 surcharge for providing an executed oath or declaration later than thirty months from the earliest claimed priority date. Applicant was afforded two months to file a proper response.

On 03 March 2006, applicant filed a "Petition Under 37 CFR 1.47" accompanied by a petition for a six-month extension of time under 37 CFR 1.17(a)(6).

DISCUSSION

Applicant is advised that six-month extensions of time do not exist nor is applicant's referenced citation of 37 CFR 1.17(a)(6) found in the code of federal regulations. Since applicant did not respond within the time period provided in the Form PCT/DO/EO/905 mailed 01 July 2005 (two months with a maximum extendable period of five month additional months) this application is **ABANDONED** as to the National Stage in the United States. Applicant may wish to file a petition to revive pursuant to 37 CFR 1.137 (a) or 37 CFR 1.137 (b). The recommendation to file a petition to revive should not be construed as to indicate whether the petition will be granted.

CONCLUSION

This application is **ABANDONED** as to the National Stage in the United States.

A decision on the petition under 37 CFR 1.47 will be held in abeyance pending revival of the application.

This application is being forwarded to the United States Designated/Elected Office (DO/EO/US) for mailing of a "Notification of Abandonment" (Form PCT/DO/EO/909).

Any further correspondence with respect to this matter should be directed to Mail Stop PCT, Commissioner for Patents, Office of PCT Legal Administration, P.O. Box 1450, Alexandria, Virginia 22313-1450, with the contents of the letter marked to the attention of the Office of PCT Legal Administration.

Derek A. Putonen
Attorney Advisor
Office of PCT Legal Administration
Tel: (571) 272-3294
Fax: (571) 273-0459

#8

UNITED STATES PATENT AND TRADEMARK OFFICE

Commissioner for Patents
United States Patent and Trademark Office
P.O. Box 1450
Alexandria, VA 22313-1450
www.uspto.gov

17 AUG 2006

David G. Dolezal
Freescale Semiconductor, Inc.
Law Department
7700 W. Parmer Lane
Mail Drop PL02
Austin, TX 78729

In re Application of	:	
NEWTON, et al.	:	
Application No.: 10/521,417	:	DECISION ON PETITIONS
PCT No.: PCT/EP03/06753	:	
Int. Filing Date: 25 June 2003	:	UNDER 37 CFR 1.137(b)
Priority Date: 05 July 2002	:	
Attorney Docket No.: SC0978EG	:	AND 37 CFR 1.47(b)
For: TRANSMITTER AND RECEIVER GAIN CALIBRATION BY MEANS OF FEED-BACK IN A TRANSCEIVER	:	

This decision is in response to the petitions filed 03 August 2006 in the United States Patent and Trademark Office (USPTO) under 37 CFR 1.137(b) to revive the present application and under 37 CFR 1.47(b) to accept the application without the signature of co-inventors Anthony Newton and Heinz Lehning.

BACKGROUND

On 03 July 2006, applicant was mailed a communication and notice of abandonment informing applicant that the petition under 37 CFR 1.47 filed 03 March 2006 was untimely and that the application was abandoned as to the National stage in the United States.

On 03 August 2006, applicant filed the petitions discussed herein.

DISCUSSION

I. Petition Under 37 CFR 1.137(b)

The petition to revive under 37 CFR 1.137(b) filed 03 August 2003 in the above-captioned application is hereby **GRANTED** as follows:

Applicant's statement that "the entire delay in filing the required reply from the due date for the required reply until the filing of a grantable petition under 37 C.F.R. § 1.137(b) was unintentional" and the prompt filing of the petition satisfies the requirement of 37 CFR 1.137(b)(3).

A review of the application file reveals that applicant has now provided a proper response to the Form PCT/DO/EO/905 mailed 01 July 2005 in the form of a petition under 37 CFR 1.47. Therefore, the request to revive the application abandoned under 35 U.S.C. 371(d) is granted as to the National stage in the United States of America.

II. Petition Under 37 CFR 1.47(b)

A petition under 37 CFR 1.47(b) must be accompanied by: (1) the requisite petition fee under 37 CFR 1.17(g); (2) factual proof that the inventor refuses to execute the application or cannot be reached after diligent effort; (3) a statement of the last known address of the non-signing inventor; (4) an oath or declaration executed by the 37 CFR 1.47(b) applicant on behalf of and as an agent for the non-signing inventor; (5) proof of proprietary interest in the application; and, (6) a showing that such action is necessary to preserve the rights of the parties or to prevent irreparable damages. Applicant has satisfied items 1 and 3 above.

As to item (2), as stated in the Manual of Patent Examination Procedure (MPEP), Section 409.03(d) Proof of Unavailability or Refusal, "Before a refusal can be alleged, it must be demonstrated that a *bona fide* attempt was made to present a copy of the application papers (specification, including claims, drawings, and oath or declaration) to the non-signing inventor for signature." Applicant states that the inventors were mailed complete sets of the application papers along with a declaration and assignment document for execution on 12 April 2005 and to date have not responded. However, it is unclear from applicant's exhibits 1-3 whether the inventors signed for these parcels or whether they were left without a signature required. This is especially important in instances such as the present where the inventor's silence is being taken as a refusal to sign. In addition, applicant has not provided any firsthand evidence of the preparation and mailing of the application papers to assure that a complete set was in fact mailed.

In addition, it appears that the e-mail of Ms. Barbe only contained a declaration document and an assignment document. Applicant has not provided a statement from Ms. Barbe explaining whether the e-mail to Mr. Newton was opened or if he responded, where she got a current e-mail address from and why Mr. Lehning did not receive an e-mail.

Regarding item 4, the filed declaration is unsigned. Applicant has provided a statement under 37 CFR 3.73(b) signed by Mr. Robert King on behalf of Freescale Semiconductor, Inc., however, applicant needs to file a declaration executed by an authorized officer of the assignee, Freescale Semiconductor, Inc. on behalf of the corporation and on behalf of the non-signing inventors. The declaration must detail the signing individual's title and right to execute the declaration on behalf of the corporation. As explained in the Manual of Patent Examining Procedure at § 409.03(b):

> Where an application is executed by one other than the inventor, the declaration required by 37 CFR 1.63 must state the full name, residence, post office address, and citizenship of the nonsigning inventor. Also, the title or position of the person signing must be stated if signing on behalf of a corporation under 37 CFR 1.47(b).

(B) The 37 CFR 1.47(b) applicant must state his or her relationship to the inventor as required by 37 CFR 1.64.

As to item (5), applicant has not provided proof of proprietary interest in the invention in that the only assignment document provided is between Motorola, Inc. and Freescale Semiconductor, Inc. Applicant has not provided a showing as to the relationship of the non-signing inventors and Motorola, Inc other than an unsigned assignment document. MPEP 409.03(f) provides for cases where a signed assignment is not present:

> A proprietary interest obtained other than by assignment or agreement to assign may be demonstrated by an appropriate legal memorandum to the effect that a court of competent jurisdiction (federal, state, or foreign) would by the weight of authority in that jurisdiction award title of the invention to the 37 CFR 1.47(b) applicant. The facts in support of any conclusion that a court would award title to the 37 CFR 1.47(b) applicant should be made of record by way of an affidavit or declaration of the person having firsthand knowledge of same. The legal memorandum should be prepared and signed by an attorney at law familiar with the law of the jurisdiction involved. A copy (in the English language) of a statute (if other than the United States statute) or a court decision (if other than a reported decision of a federal court or a decision reported in the United States Patents Quarterly) relied on to demonstrate a proprietary interest should be made of record.

While applicant has provided a portion of the Swiss Civil Law Code which states that employers maintain the rights to inventions made by an employee in the performance of his duties, a signed legal memorandum has not been provided. In addition, applicant has not submitted any evidence to confirm that Mr. Newton and Mr. Lehning created the invention during their employment with Motorola.

Regarding item (6), applicant has not provided a statement that such action is necessary to preserve the rights of the parties or to prevent irreparable damages. (See MPEP 409.03(g).

In light of the above, it is not possible to grant applicant's petition at this time.

CONCLUSION

For the reasons stated above, applicant's petition under 37 CFR 1.47(b) is **DISMISSED**, without prejudice.

Any reconsideration on the merits of this petition must be filed within **TWO (2) MONTHS** from the mail date of this decision. Any reconsideration request should include a cover letter entitled "Renewed Petition Under 37 CFR 1.47(b)." No additional petition fee is required. Extensions of time may be obtained under 37 CFR 1.136(a).

Any further correspondence with respect to this matter should be directed to Mail Stop PCT, Commissioner for Patents, Office of PCT Legal Administration, P.O. Box 1450, Alexandria, Virginia 22313-1450, with the contents of the letter marked to the attention of the Office of PCT Legal Administration.

Derek A. Putonen
Attorney Advisor
Office of PCT Legal Administration
Tel: 571-272-3294
Fax: 571-273-0459

UNITED STATES PATENT AND TRADEMARK OFFICE

Commissioner for Patents
United States Patent and Trademark Office
P.O. Box 1450
Alexandria, VA 22313-1450
www.uspto.gov

02 NOV 2006

David G. Dolezal
Freescale Semiconductor, Inc.
Law Department
7700 W. Parmer Lane
Mail Drop PL02
Austin, TX 78729

In re Application of	:	
NEWTON, et al.	:	
Application No.: 10/521,417	:	DECISION ON PETITION
PCT No.: PCT/EP03/06753	:	
Int. Filing Date: 25 June 2003	:	UNDER 37 CFR 1.47(b)
Priority Date: 05 July 2002	:	
Attorney Docket No.: SC0978EG	:	
For: TRANSMITTER AND RECEIVER GAIN CALIBRATION BY MEANS OF FEED-BACK IN A TRANSCEIVER	:	

This decision is in response to the renewed petition under 37 CFR 1.47(b) to accept the application without the signature of co-inventors Anthony Newton and Heinz Lehning filed 16 October 2006 in the United States Patent and Trademark Office (USPTO).

BACKGROUND

On 17 August 2006, applicant was mailed a decision granting applicant's petition to revive pursuant to 37 CFR 1.137(b) and dismissing applicant's petition under 37 CFR .147(b). Applicant was afforded two months to file any request for reconsideration.

On 16 October 2006, applicant filed the present renewed petition discussed herein.

DISCUSSION

As detailed in the decision mailed 17 August 2006, a petition under 37 CFR 1.47(b) must be accompanied by: (1) the requisite petition fee under 37 CFR 1.17(g); (2) factual proof that the inventor refuses to execute the application or cannot be reached after diligent effort; (3) a statement of the last known address of the non-signing inventor; (4) an oath or declaration executed by the 37 CFR 1.47(b) applicant on behalf of and as an agent for the non-signing inventor; (5) proof of proprietary interest in the application; and, (6) a showing that such action is necessary to preserve the rights of the parties or to prevent irreparable damages. Applicant previously satisfied items 1 and 3 above.

With the filing of the present renewed petition and supporting documentation, applicant has addressed all of the remaining items identified as unsatisfied in the decision mailed 17 August

2006 and therefore it is proper to grant applicant's renewed petition at this time.

CONCLUSION

For the reasons above, applicant's renewed petition under 37 CFR 1.47(b) is **GRANTED**.

The application has an international filing date of 25 June 2003 under 35 U.S.C. 363, and will be given a date of **16 October 2006** under 35 U.S.C. 371(c)(1), (c)(2) and (c)(4).

As provided in 37 CFR 1.47(c), a notice of the filing of this application will be forwarded to the non-signing inventors at their last known addresses of record. A notice of the filing of the application under 37 CFR 1.47(b) will be published in the Official Gazette.

This application is being returned to the DO/EO/US for processing in accordance with this decision.

Derek A. Putonen
Attorney Advisor
Office of PCT Legal Administration
Tel: 571-272-3294
Fax: 571-273-0459

UNITED STATES PATENT AND TRADEMARK OFFICE

Commissioner for Patents
United States Patent and Trademark Office
P.O. Box 1450
Alexandria, VA 22313-1450
www.uspto.gov

#7

20 JAN 2006

CROWELL & MORING
Intellectual Property Group
PO Box 14300
Washington, DC 20044-4300

In re Application of:	:	
JURMANN, Alexander	:	
U.S. Application No.: 10/521,434	:	DECISION ON PAPERS
PCT No.: PCT/EP2003/007194	:	SUBMITTED UNDER
International Filing Date: 04 July 2003	:	37 CFR 1.42
Priority Date: 17 July 2002	:	
Attorney's Docket No.: 038724.55803US	:	
For: VACUUM CARBURIZING METHOD AND	:	
DEVICE	:	

This decision is issued in response to the 20 October 2005 submission of a declaration executed on behalf of deceased inventor Alexander JURMANN by his legal representative Susanne JURMANN, treated herein as a submission under 37 CFR 1.42. No petition fee is required.

BACKGROUND

On 14 January 2005, applicants filed a Transmittal Letter requesting entry into the national stage in the United States of America under 35 U.S.C. § 371. The Transmittal Letter was accompanied by, among other materials, payment of the basic national fee and a translation of the international application into English.

On 07 September 2005, the United States Designated/Elected Office (DO/EO/US) mailed a "Notification Of Missing Requirements" (Form PCT/DO/EO/905) indicating that an oath or declaration in compliance with 37 CFR 1.497 was required.

On 20 October 2005, applicants filed the declaration considered herein. The declaration was executed on behalf of the deceased sole inventor by his legal representative.

DISCUSSION

Pursuant to 37 CFR § 1.42, first sentence:

> "In case of the death of the inventor, the legal representative (executor, administrator, etc.) of the deceased inventor may make the necessary oath or declaration, and apply for and obtain a patent."

37 CFR 1.497(b)(2) states the following:

> (2) If the person making the oath or declaration or any supplemental oath or declaration is not the inventor (§§ 1.42, 1.43, or § 1.47) the oath or declaration shall state the relationship of the person to the inventor, and, upon information and belief, the facts which the inventor would have been required to state. If the person signing is the legal representative of a deceased inventor, the oath or declaration shall also state that the person is a legal representative and the citizenship, residence, and mailing address of the legal representative.

The declaration submitted on 20 October 2005 identifies the deceased inventor and states the inventor's country of citizenship, as required for compliance with 37 CFR 1.497(a)(3). The declaration is signed by Susanne JURMANN as "legal representative" of the deceased inventor, states the relationship to the deceased (i.e., legal representative), and provides the legal representative's country of citizenship and residency. Accordingly, the declaration complies with the requirements of 37 CFR 1.497(b)(2).

Based on the above, it is appropriate, at this time, to accord the application status under 37 CFR 1.42.

CONCLUSION

For the above reasons, the request for status under 37 CFR 1.42 is **GRANTED**. The declaration filed on 20 October 2005 is accepted as complying with 37 CFR 1.497.

The application will be forwarded to the National Stage Processing Branch of the Office of PCT Operations for further processing in accordance with this decision. The date under 35 U.S.C. 371(c)(1), (c)(2), and (c)(4) is 20 October 2005.

Richard M. Ross
PCT Petitions Attorney
Office Of PCT Legal Administration
Telephone: (571) 272-3296
Facsimile: (571) 273-0459

UNITED STATES PATENT AND TRADEMARK OFFICE

COMMISSIONER FOR PATENTS
UNITED STATES PATENT AND TRADEMARK OFFICE
P.O. BOX 1450
ALEXANDRIA, VA 22313-1450
www.uspto.gov

ROTHWELL, FIGG, ERNST &
MANBECK, P.C.
1425 K STREET, N.W.
SUITE 800
WASHINGTON DC 20005

COPY MAILED

AUG 12 2009

OFFICE OF PETITIONS

In re Application of	:
Bartoli et al.	: DECISION ON APPLICATION
Application No. 10/521461	: FOR PATENT TERM ADJUSTMENT
Filing or 371(c) Date: 01/18/2005	:
Attorney Docket Number: 3494-106	:

This is in response to the "PETITION TO CORRECT PATENT TERM ADJUSTMENT," filed June 5, 2009. This matter is being properly treated under 37 CFR 1.705(b) as an application for patent term adjustment. Applicant submits that the correct patent term adjustment to be indicated on the patent is 592 days, not 260 days as calculated by the Office as of the mailing of the initial determination of patent term adjustment. Applicant requests this correction solely on the basis that the Office will take in excess of three years to issue this patent.

As the instant application for patent term adjustment requests reconsideration of the patent term adjustment as it relates to the Office's failure to issue the patent within 3 years of the filing date, the application for patent term adjustment under 37 CFR 1.705(b) is **DISMISSED as PREMATURE**.

Knowledge of the actual date the patent issues is required to calculate the amount, if any, of additional patent term patentee is entitled to for Office failure to issue the patent within 3 years. See § 1.702(b). (This is true even where a request for continued examination (RCE) was filed). The computer will not undertake the § 1.702(b) calculation until the actual date of issuance of the patent has been determined. Likewise, the computer will not calculate any further Office delay under § 1.702(a)(4) or applicant delay under § 1.704(c)(10) until the actual date of issuance of the patent has been determined. As such, the Office can not make a determination on the correctness of the patent term adjustment until the patent has issued.

Requesting reconsideration of the patent term adjustment to be indicated on the patent under 37 CFR 1.705(b) based on the initial determination of patent term adjustment and a projected issuance date of the patent (or even the filing date of the request for continued examination) is premature. Accordingly, it is appropriate to dismiss as premature such a request.

Rather than file a request for reconsideration of patent term adjustment under 37 CFR 1.705(b) contesting the 37 CFR 1.702(b) calculation at the time of the mailing of the notice of allowance, applicant is advised that they may wait until the time of the issuance of the patent and file a request for reconsideration of the patent term adjustment pursuant to 37 CFR 1.705(d). As the USPTO does not calculate the amount of time earned pursuant to 37 CFR 1.702(b) until the time of the issuance of the patent, the Office will consider any request for reconsideration of the patent term adjustment due to an error in the calculation of 37 CFR 1.702(b) to be timely if the request for reconsideration is filed within two months of the issuance of the patent. However, as to all other bases for contesting the initial determination of patent term adjustment received with the notice of allowance, applicant must timely file an application for patent term adjustment prior to the payment of the issue fee[1].

The Office acknowledges submission of the $200.00 fee set forth in 37 CFR 1.18(e) for consideration of the application for patent term adjustment under 37 CFR 1.705(b).

Any request for reconsideration of the patent term adjustment indicated on the patent must be timely filed within 2 months after issuance pursuant to 37 CFR 1.705(d) and must include payment of the required fee under 37 CFR 1.18(e).

The Office of Data Management has been advised of this decision. This application is being referred to the Office of Data Management for issuance of the patent.

Telephone inquiries specific to this decision should be directed to Attorney Derek Woods at (571) 272-3232.

Alesia Brown
Petitions Attorney
Office of Petitions
Office of the Deputy Commissioner
for Patent Examination Policy

---

[1] For example, if applicant disputes both the calculation of patent term adjustment under 37 CFR 1.702(a)(1) for Office failure to mail a first Office action or notice of allowance not later than fourteen months after the date on which the application was filed and under 37 CFR 1.702(b) for Office failure to issue a patent within three years of the actual filing date of the application, then applicant must still timely file an application for patent term adjustment prior to the payment of the issue fee to contest the calculation of Office delay in issuing a first Office action or notice of allowance. See 37 CFR 1.705(b) and 35 U.S.C. 154(b)(3)(B). A dispute as to the calculation of the §1.702(a)(1) period raised on request for reconsideration of patent term adjustment under 37 CFR 1.705(d) will be dismissed as untimely filed.

UNITED STATES PATENT AND TRADEMARK OFFICE

Commissioner for Patents
United States Patent and Trademark Office
P.O. Box 1450
Alexandria, VA 22313-1450
www.uspto.gov

COPY MAILED

DEC 07 2009

OFFICE OF PETITIONS

ROTHWELL, FIGG, ERNST &
MANBECK, P.C.
1425 K STREET, N.W.
SUITE 800
WASHINGTON DC 20005

In re Application of	:	
Bartoli et al.	:	
Patent Number: 7,589,125	:	ON APPLICATION FOR
Issue Date: 09/15/2009	:	PATENT TERM ADJUSTMENT
Application No. 10/521461	:	
Filing or 371(c) Date: 01/18/2005	:	
Attorney Docket Number: 3494-106	:	

This is in response to the PETITION TO CORRECT PATENT TERM ADJUSTMENT, filed September 22, 2009. Patentee requests that the determination of patent term adjustment be corrected from 260 days to 592 days. The petition is properly treated as an application for patent term adjustment under 37 CFR §1.705(d).

The request for reconsideration patent term adjustment is **DISMISSED**.

On September 15, 2009, the above-identified application matured into U.S. Patent No. 7,589,125 with a patent term adjustment of 260 days. This application for patent term adjustment was timely filed within two months of the issue date of the patent. See 37 CFR 1.705(d).

Patentees request recalculation of the patent term adjustment as interpreted by the ruling in Wyeth v. Dudas, 580 F. Supp. 2d 138, 88 U.S.P.Q. 2d 1538 (D.D.C. 2008). Specifically, Patentees assert that the patent term adjustment should be based on the number of days beyond 14 months before applicant received a first office action plus the number of days that pendency exceeded three years, minus any overlap between the two periods. Accordingly, Patentees assert that the correct patent term adjustment for this patent is 592 days (the sum of 444 days for the "First period" and 332 days of "Post 3-Year," or 776 days), reduced by 184 days of Applicant delay).

Under 37 CFR 1.703(f), patentees are entitled to a period of patent term adjustment equal to the period of delays based on the grounds set forth in 37 CFR 1.702 reduced by the period of time equal to the period of time during which patentees failed to engage in reasonable efforts to conclude prosecution pursuant to 37 CFR 1.704. In other words, patentees are entitled to the period of Office delay reduced by the period of applicant delay.

The Office asserts that as of the date of filing of the request for continued examination on December 15, 2008, the application was pending three years and 331 days after its filing date (January 19, 2008 to December 14, 2008). The Office agrees that certain action was not taken within the specified time frame, and thus, the entry of a period of adjustment of 444 days is correct. At issue is whether patentees should accrue an additional 331 days of patent term adjustment for the Office taking in excess of three years to issue the patent, as well as 444 days for Office failure to take a certain action within a specified time frame (or examination delay).

The Office contends that the period of 331 days of delay in issuing the patent overlaps with the 444 days of examination delay under 37 CFR 1.702(a). Patentees' calculation of the period of overlap is inconsistent with the Office's interpretation of this provision. 35 U.S.C. 154(b)(2)(A) limits the adjustment of patent term, as follows:

> To the extent that the periods of delay attributable to grounds specified in paragraph (1) overlap, the period of any adjustment granted under this subsection shall not exceed the actual number of days the issuance of the patent was delayed.

Likewise, 35 CFR 1.703(f) provides that:

> To the extent that periods of delay attributable to the grounds specified in § 1.702 overlap, the period of adjustment granted under this section shall not exceed the actual number of days the issuance of the patent was delayed.

As explained in *Explanation of 37 CFR 1.703(f) and of the United States Patent and Trademark Office Interpretation of 35 U.S.C. 154(b)(2)(A)*, 69 Fed. Reg. 34283 (June 21, 2004), the Office interprets 35 U.S.C. 154(b)(2)(A) as permitting either patent term adjustment under 35 U.S.C. 154(b)(1)(A)(i)-(iv), or patent term adjustment under 35 U.S.C. 154(b)(1)(B), but not as permitting patent term adjustment under both 35 U.S.C. 154(b)(1)(A)(i)-(iv) and 154(b)(1)(B). Accordingly, the Office implements the overlap provision as follows:

> If an application is entitled to an adjustment under 35 U.S.C. 154(b)(1)(B), the entire period during which the application was pending (except for periods excluded under 35 U.S.C. 154(b)(1)(B)(i)-(iii)), and not just the period beginning three years after the actual filing date of the application, is the period of delay under 35 U.S.C. 154(b)(1)(B) in determining whether periods of delay overlap under 35 U.S.C. 154(b)(2)(A). Thus, any days of delay for Office issuance of the patent more than 3 years after the filing date of the application, which overlap with the days of patent term adjustment accorded prior to

> the issuance of the patent will not result in any additional patent term adjustment. See 35 U.S.C. 154(b)(1)(B), 35 U.S.C. 154(b)(2)(A), and 37 CFR § 1.703(f). See *Changes to Implement Patent Term Adjustment Under Twenty Year Term; Final Rule*, 65 Fed. Reg. 56366 (Sept. 18, 2000). See also *Revision of Patent Term Extension and Patent Term Adjustment Provisions; Final Rule*, 69 Fed. Reg. 21704 (April 22, 2004), 1282 Off. Gaz. Pat. Office 100 (May 18, 2004). See also *Explanation of 37 CFR 1.703(f) and of the United States Patent and Trademark Office Interpretation of 35 U.S.C. 154(b)(2)(A),* 69 Fed. Reg. 34283 (June 21, 2004).

The current wording of § 1.703(f) was revised in response to the misinterpretation of this provision by a number of Patentees. The rule was slightly revised to more closely track the corresponding language of 35 U.S.C. 154(b)(2)(A). The relevant portion differs only to the extent that the statute refers back to provisions of the statute whereas the rule refers back to sections of the rule. This was not a substantive change to the rule nor did it reflect a change of the Office's interpretation of 35 U.S.C. 154(b)(2)(A). As stated in the *Explanation of 37 CFR 1.703(f) and of the United States Patent and Trademark Office Interpretation of 35 U.S.C. 154(b)(2)(A)*, the Office has consistently taken the position that if an application is entitled to an adjustment under the three-year pendency provision of 35 U.S.C. 154(b)(1)(B), the entire period during which the application was pending before the Office (except for periods excluded under 35 U.S.C. 154(b)(1)(B)(i)-(iii)), and not just the period beginning three years after the actual filing date of the application, is the relevant period under 35 U.S.C. 154(b)(1)(B) in determining whether periods of delay "overlap" under 35 U.S.C. 154(b)(2)(A).

This interpretation is consistent with the statute. Taken together the statute and rule provide that to the extent that periods of delay attributable to grounds specified in 35 U.S.C. 154(b)(1) and in corresponding § 1.702 overlap, the period of adjustment granted shall not exceed the actual number of days the issuance of the patent was delayed. The grounds specified in these sections cover the A) guarantee of prompt Patent and Trademark Office responses, B) guarantee of no more than 3-year application pendency, and C) guarantee or adjustments for delays due to interference, secrecy orders and appeals. A section by section analysis of 35 U.S.C. 154(b)(2)(A) specifically provides that:

> Section 4402 imposes limitations on restoration of term. In general, pursuant to [35 U.S.C.] 154(b)(2)(A)-(C), total adjustments granted for restorations under [35 U.S.C. 154](b)(1) are reduced as follows: (1) To the extent that there are multiple grounds for extending the term of a patent that may exist simultaneously (e.g., delay due to a secrecy order under [35 U.S.C.] 181 and administrative delay under [35 U.S.C.] 154(b)(1)(A)), the term should not be extended for each ground of delay but only for the actual number of days that the issuance of a patent was delayed; See 145 Cong. Rec. S14,718[1]

[1] The AIPA is title IV of the Intellectual Property and Communications Omnibus Reform Act of 1999 (S. 1948), which was incorporated and enacted as law as part of Pub. L. 106-113. The Conference Report for H.R. 3194, 106th Cong. 1st Sess. (1999), which resulted in Pub. L. 106-113, does not contain any discussion (other than the incorporated language) of S. 1948. A section-by-section analysis of S. 1948, however, was printed in the Congressional Record at the request of Senator Lott, See 145 Cong. Rec. S14,708-26 (1999)(daily ed. Nov. 17, 1999).

As such, the period for over three-year pendency does not overlap only to the extent that the actual dates in the period beginning three years after the date on which the application was filed overlap with the actual dates in the periods for failure of the Office to take action within specified time frames. In other words, consideration of the overlap does not begin three years after the filing date of the application.

In this instance, the relevant period under 35 U.S.C. 154(b)(1)(B) in determining whether periods of delay "overlap" under 35 U.S.C. 154(b)(2)(1) is the entire period during which the application was pending before the Office, January 18, 2005, to December 14, 2008, the day before the date that the RCE was filed. Prior to the filing of the RCE, 444 days of patent term adjustment were accorded for the Office failing to respond within a specified time frame during the pendency of the application. All of the 331 days for Office delay in issuing the patent overlap with the 444 days of Office examination delay. During that time, the issuance of the patent was delayed by 444 days, not 331 days + 444 days. The Office took 14 months and 444 days to issue a first Office action. Otherwise, the Office took all actions set forth in 37 CFR 1.702(a) within the prescribed timeframes. Nonetheless, given the initial 444 days of Office examination delay and the time allowed within the time frames for processing and examination, the application issued three years and 444 days after its filing date. The Office did not delay 331 days and then an additional 444 days. Accordingly, 444 days of patent term adjustment was properly entered because the period of delay of 331 days attributable to the delay in the issuance of the patent overlaps with the adjustment of 444 days attributable to grounds specified in § 1.702(a). Entry of both periods is not warranted.

In view thereof, no adjustment to the patent term will be made.

As authorized, the required $200.00 application fee set forth in 37 CFR 1.18(e) has been charged to Deposit Account No. 02-2135.

Telephone inquiries specific to this matter should be directed to Attorney Derek Woods, at (571) 272-3232.

/ALESIA M. BROWN/

Alesia M. Brown
Senior Petitions Attorney
Office of Petitions
Office of the Deputy Commissioner
for Patent Examination Policy

UNITED STATES PATENT AND TRADEMARK OFFICE

UNITED STATES DEPARTMENT OF COMMERCE
United States Patent and Trademark Office
Address: COMMISSIONER FOR PATENTS
P.O. Box 1450
Alexandria, Virginia 22313-1450
www.uspto.gov

ROTHWELL, FIGG, ERNST & MANBECK, P.C.
1425 K STREET, N.W.
SUITE 800
WASHINGTON, DC 20005

Mail Date: 04/20/2010

Applicant	: Javier Bartoli Orpi	: DECISION ON REQUEST FOR
Patent Number	: 7589125	: RECALCULATION of PATENT
Issue Date	: 09/15/2009	: TERM ADJUSTMENT IN VIEW
Appliction No	: 10/521,461	: OF WYETH AND NOTICE OF INTENT TO
Filed	: 01/18/2005	: ISSUE CERTIFICATE OF CORRECTION
		:

The Request for Recalculation is **GRANTED** to the extent indicated.

The patent term adjustment has been determined to be **591** days. The USPTO will *sua sponte* issue a certificate of correction reflecting the amount of PTA days determined by the recalculation.

Prior to the issuance of the certificate of correction, the USPTO will afford patentee an opportunity to be heard and request reconsideration. Accordingly, patentee has **one month or thirty (30) days**, whichever is longer, to file a request for reconsideration of this patent term adjustment calculation. See 35 U.S.C. 154(b)(3)(B)(ii) and 37 CFR 1.322(a)(4). No extensions of time will be granted under 37 CFR 1.136.

Patentee should use document code PET.OP if electronically filing a request for reconsideration of this patent term adjustment calculation. The patentee must also include the information required by 37 CFR 1.705(b)(2) and the fee required by 37 CFR 1.18(e). If patentee does not file a timely request for reconsideration of this patent term adjustment calculation including the information required by 37 CFR 1.705(b)(2) and the fee required by 37 CFR 1.18(e), the USPTO will issue a certificate of correction reflecting the PTA determination noted above.

Patentee should be aware that in order to preserve the right to review in the United States District Court for the District of Columbia of the USPTO patent term adjustment determination, patentee must ensure that he or she also take the steps required under 35 U.S.C. 154(b)(4)(A) in a timely manner. Nothing in the request for recalculation should be construed as providing an alternative time frame for commencing a civil action under 35 U.S.C. 154(b)(4)(A).

Any questions concerning this decision should be directed to the Office of Patent Legal Administration at 571-272-7702.

UNITED STATES PATENT AND TRADEMARK OFFICE

Commissioner for Patents
United States Patent and Trademark Office
P.O. Box 1450
Alexandria, VA 22313-1450
www.uspto.gov

OBLON, SPIVAK, MCCLELLAND MAIER & NEUSTADT, P.C.
1940 DUKE STREET
ALEXANDRIA VA 22314

COPY MAILED

SEP 23 2008

In re Patent No. 7,350,557 :
Issue Date: April 1, 2008 :
Application No. 10/521,466 : ON PETITION
Filed: October 21, 2005 :
Attorney Docket No. 264589US6PCT :

This is a decision on the petition filed May 6, 2008, which is being treated as a request under 37 CFR 3.81(b)[1] to correct the name of the assignee on the front page of the above-identified patent by way of a Certificate of Correction.

The request is **GRANTED**.

Telephone inquiries concerning this decision may be directed to the undersigned at (571) 272-3205. Inquiries regarding the issuance of a certificate of correction should be directed to the Certificate of Correction Branch at (571) 272-4200.

The Certificates of Correction Branch will be notified of this decision granting the petition under 37 CFR 3.81(b) and directing issuance of the requested Certificate of Correction.

Alesia M. Brown
Petitions Attorney
Office of Petitions

[1] *See* MPEP 1309, subsection II; and Official Gazette of June 22, 2004.

UNITED STATES PATENT AND TRADEMARK OFFICE

Commissioner for Patents
United States Patent and Trademark Office
P.O. Box 1450
Alexandria, VA 22313-1450
www.uspto.gov

Greenberg Traurig, LLP
2450 Colorado Avenue, Suite 400E
Santa Monica, CA 90404

In re Application of
DALLA VALLE, Roberto
U.S. App. No. 10/521,482
PCT No.: PCT/IT03/00346
Int. Filing Date: 03 June 2003
Priority Date: 22 July 2002
Attorney Docket No.: 58009-019100
For: AGGLOMERATED MATERIAL CONTAINING RECYCLED SILICON

REQUEST FOR REFUND

This is a decision on applicant's "Request for Refund under 37 CFR 1.26" filed in the United States Patent and Trademark Office (USPTO) on 22 November 2005. Applicant is requesting a refund in the amount of $65 for the additional surcharge for filing an oath or declaration later than thirty-months from the priority date charged to Deposit Account no. 50-2638 on 20 January 2005.

The present request states that "[t]he Patent Office charged the deposit account 50-2638 (Attorney Docket No.: 58009-019100), per Applicant's request of September 7, 2005. Applicant realizes the surcharge fee in the amount of $65.00 was previously paid at the time of filing on January 20, 2005." A review of the application file reveals that the surcharge for filing an oath or declaration later than thirty-months from the priority date was charged to counsel's Deposit Account on 20 January 2005 and 07 September 2005. Therefore, applicant's request for refund is granted and $65 will be refunded to Deposit Account no. 50-2638.

The application is being referred back to Group Art Unit #3673 for further processing.

Anthony Smith
Attorney-Advisor
Office of PCT Legal Administration
Telephone: (571) 272-3298
Facsimile: (571) 273-0459

UNITED STATES PATENT AND TRADEMARK OFFICE

COMMISSIONER FOR PATENTS
UNITED STATES PATENT AND TRADEMARK OFFICE
P.O. BOX 1450
ALEXANDRIA, VA 22313-1450
www.uspto.gov

NORRIS, MCLAUGHLIN & MARCUS
875 Third Avenue, 18th Floor
New York, NY 10022

18 JAN 2007

In re Application of:
KRAFT, Phillip, et al.
U.S. Application No.: 10/521,494
PCT No.: PCT/CH03/00466
International Filing Date: 11 July 2003
Priority Date: 20 July 2002
Attorney's Docket No.: 102790-186 (30060)
For: FRAGRANCE COMPOSITION

DECISION ON PETITION
(37 CFR 1.181)

This decision is issued in response to the "Petition To The Commissioner" filed 20 December 2006, treated herein as a petition under 37 CFR 1.181 to withdraw the holding of abandonment. No petition fee is required.

BACKGROUND

The procedural background for this application was set forth in detail in the decisions mailed herein on 29 March 2006 and 13 July 2006.

The decision mailed 29 March 2006 dismissed applicants petition under 37 CFR 1.47(a) for failure to satisfy the requirements of a grantable petition. It is noted that the petition under 37 CFR 1.47(a) was filed by applicants in response to the Notification Of Missing Requirements (Form PCT/DO/EO/905) mailed herein on 19 August 2005.

The decision mailed 13 July 2006 dismissed applicant's renewed submission under 37 CFR 1.47(a) as moot based on applicants' 13 June 2006 filing of a declaration executed by the previously non-signing inventor. The decision noted that date under 35 U.S.C. 371(c)(1), (c)(2), and (c)(4) was 13 June 2006.

On 06 November 2006, the DO/EO/US mailed a Notification Of Abandonment (Form PCT/DO/EO/909) indicating that the application was abandoned for failure to file a timely response to the Notification Of Missing Requirements mailed 19 August 2005.

On 20 December 2006, applicants filed the petition considered herein. The petition refers to the previous decisions herein and asserts that, based on such decisions, the holding of abandonment should be withdrawn.

DISCUSSION

A review of the application file confirms that applicants filed a timely response to the Notification of Missing Requirements mailed 19 August 2005 (in the form of a petition under 37

CFR 1.47(a), with required extension fee), and that the petition was later dismissed as moot based on applicants' 16 June 2006 filing of a declaration executed by the previously non-signing inventor.

The Notification Of Abandonment mailed 06 November 2006, based as it was on applicants' purported failure to file a response to the Notification Of Missing Requirements mailed 19 August 2005, is therefore appropriately withdrawn.

CONCLUSION

The petition to withdraw the holding of abandonment is **GRANTED**.

The Notification Of Abandonment (Form PCT/DO/EO/909) mailed 06 November 2006 is hereby **VACATED**.

This application is being referred to the National Stage Processing Branch of the PCT Operations Division for further processing in accord with this decision. The date under 35 U.S.C. 371(c)(1), (c)(2), and (c)(4) is 13 June 2006.

Richard M. Ross
Attorney Advisor
Office of PCT Legal Administration
Telephone: (571) 272-3296
Facsimile: (571) 273-0459

28 MAR 2006

#7

UNITED STATES PATENT AND TRADEMARK OFFICE

COMMISSIONER FOR PATENTS
UNITED STATES PATENT AND TRADEMARK OFFICE
P.O. BOX 1450
ALEXANDRIA, VA 22313-1450
www.uspto.gov

NORRIS, MCLAUGHLIN & MARCUS
875 Third Ave
18th Floor
New York, NY 10022

In re Application of:	:	
KRAFT, Phillip, et al.	:	DECISION ON PETITION UNDER
U.S. Application No.: 10/521,494	:	37 CFR 1.47(a)
PCT No.: PCT/CH03/00466	:	
International Filing Date: 11 July 2003	:	
Priority Date: 20 July 2002	:	
Attorney's Docket No.: 102790-186(30060)	:	
For: FRAGRANCE COMPOSITION	:	

This decision is issued in response to applicants' "Petition To Admit Oath & Declaration Pursuant To 37 CFR 1.47(A)" filed 23 January 2006. Deposit Account No. 14-1263 will be charged the required $200 petition fee.

BACKGROUND

On 11 July 2003, applicants filed international application PCT/CH03/00466. The application claimed a priority date of 20 July 2002 and designated the United States. On 29 January 2004, the International Bureau (IB) communicated a copy of the international application to the United States Patent And Trademark Office (USPTO). The deadline for submission of the basic national fee was thirty months from the priority date, i.e., 20 January 2005.

On 18 January 2005, applicants filed a Transmittal Letter for entry into the national stage in the United States accompanied by, among other materials, payment of the basic national fee.

On 19 August 2005, the United States Designated/Elected Office (DO/EO/US) mailed a Notification Of Missing Requirement (Form PCT/DO/EO/905) indicating that an oath or declaration in compliance with 37 CFR 1.497 and the surcharge for filing the oath or declaration later than thirty months after the priority date was required.

On 23 January 2006, applicants filed a response to the Notification Of Missing Requirements (with required three-month extension fee). The submission includes the petition under 37 CFR 1.47(a) considered herein. The petition seeks acceptance of the application without the signature of inventor Riccardo CADALBERT, whom applicants argue has refused to execute the application.

DISCUSSION

Where some (but not all) of the inventors fail to execute the declaration, acceptance of the application without the signature of the remaining inventors may be requested pursuant to 37 CFR 1.47(a). A grantable petition under 37 CFR 1.47(a) must be accompanied by: (1) the fee under 37 CFR 1.17; (2) a statement of the last known address of the non-signing inventor; (3) an oath or declaration by the other inventors on behalf of themselves and the non-signing inventor; and (4) factual proof that the inventor refuses to execute the application or cannot be reached after diligent effort. As discussed below, applicants here have failed to satisfy items (3) and (4).

Regarding item (1), Deposit Account No. 14-1263 will be charged the required $200 petition fee. Item (1) is therefore satisfied.

As for item (2), the petition expressly states the last known address for the non-signing inventor Riccardo CADALBERT. Accordingly, item (2) is satisfied.

Regarding item (3), section 409.03(a) of the Manual of Patent Examining Procedure ("MPEP") states that:

> An oath or declaration signed by all the available joint inventors with the signature block of the nonsigning inventor(s) left blank may be treated as having been signed by all the available joint inventors on behalf of the nonsigning inventor(s), unless otherwise indicated.

Here, applicants have filed a declaration executed by the one of the two inventors with an unsigned signature box for the non-signing inventor. However, applicants have also submitted a copy of the declaration executed on behalf of the non-signing inventor by a representative of the assignee. Because the assignee has executed the declaration on behalf of the non-signing inventor, the declaration filed here cannot be treated as having been signed by the available inventor on his own behalf and on behalf of the non-signing inventor, as required for the declaration to be accepted.[1] The present declaration is therefore unacceptable. Item (3) is not satisfied.

Regarding item (4), applicants assert that the nonsigning inventor has refused to execute the application. Under such circumstances, MPEP § 409.03(d) requires evidence that a copy of the complete application papers have been provided to the nonsigning inventor and "a statement of facts by the person who presented the inventor with the application papers and/or to whom the refusal was made." The MPEP also states that "[i]f there is documentary evidence to support facts alleged in the petition or in any statement of facts, such evidence should be submitted." Here, the evidence submitted by applicants to demonstrate the refusal to execute the application is contained in the declaration of Pascal DE ROUGEMONT, and the accompanying attachments. The statement describes an ongoing correspondence between the assignee and representatives of the non-signing inventor, and includes English translations of correspondence mailed by the

[1] Where, as here, some of the inventors have executed the declaration, it is impermissible for the assignee to sign on behalf of the others. The assignee can only sign on behalf of the non-signing inventor in cases where none of the inventors has signed the declaration (see 37 CFR 1.47(b)).

assignee (including a letter which states that it includes a copy of the application papers, as required). However, applicants have not provided English translations of the correspondence from the non-signing inventor's attorney. Such translations are necessary, because this correspondence purportedly contains the refusal of the non-signing inventor to execute the declaration. Until an English translation of these materials is submitted, it cannot be determined whether the materials provided are sufficient to demonstrate a refusal to execute the application materials. Item (4) above is therefore not satisfied.

Applicants have failed to satisfy all the requirements of a grantable petition under 37 CFR 1.47(a). Accordingly, the petition cannot be granted on the present record.

CONCLUSION

The petition under 37 CFR 1.47(a) is **DISMISSED** without prejudice.

If reconsideration on the merits of this petition is desired, a proper response must be filed within **TWO (2) MONTHS** from the mail date of this decision. Any reconsideration request should include a cover letter entitled "Renewed Petition Under 37 CFR 1.47(a)" and should include the materials necessary to satisfy items (3) and (4) of a grantable petition, as discussed above.

No additional petition fee is required. Failure to file a timely response will result in abandonment of the application.

Please direct further correspondence with respect to this matter to the Mail Stop PCT, Commissioner for Patents, Office of PCT Legal Administration, P.O. Box 1450, Alexandria, Virginia 22313-1450, with the contents of the letter marked to the attention of the Office of PCT Legal Administration.

Richard M. Ross
Attorney Advisor
Office of PCT Legal Administration
Telephone: (571) 272-3296
Facsimile: (571) 273-0459

#9

UNITED STATES PATENT AND TRADEMARK OFFICE

Commissioner for Patents
United States Patent and Trademark Office
P.O. Box 1450
Alexandria, VA 22313-1450
www.uspto.gov

13 JUL 2006

NORRIS, MCLAUGHLIN & MARCUS
875 Third Avenue, 18th Floor
New York, NY 10022

In re Application of:	:	
KRAFT, Phillip, et al.	:	DECISION ON RENEWED
U.S. Application No.: 10/521,494	:	PETITION UNDER
PCT No.: PCT/CH03/00466	:	37 CFR 1.47(a)
International Filing Date: 11 July 2003	:	
Priority Date: 20 July 2002	:	
Attorney's Docket No.: 102790-186 (30060)	:	
For: FRAGRANCE COMPOSITION	:	

In a decision mailed by this Office on 28 March 2006, applicants' petition under 37 CFR 1.47(a) for acceptance of the application without the signature of co-applicant Riccardo CADALBERT was dismissed without prejudice for failure to satisfy the requirements of a grantable petition.

On 13 June 2006, applicants filed the renewed petition considered herein (with required one-month extension fee). The renewed petition includes an acceptable declaration executed by the previously non-signing inventor Riccardo CADALBERT; applicants had previously submitted a declaration executed by other applicant of record, Phillip KRAFT. Applicants have therefore now submitted acceptable declarations from each of the applicants herein. Accordingly, the petition under 37 CFR 1.47(a) is **MOOT**.

This application is being forwarded to the National Stage Processing Branch of the PCT Operations Division for further processing in accord with this decision. The date under 35 U.S.C. 371(c)(1), (c)(2), and (c)(4) is 13 June 2006.

Richard M. Ross
Attorney Advisor
Office of PCT Legal Administration
Telephone: (571) 272-3296
Facsimile: (571) 273-0459

12 DEC 2006

UNITED STATES PATENT AND TRADEMARK OFFICE

Commissioner for Patents
United States Patent and Trademark Office
P.O. Box 1450
Alexandria, VA 22313-1450
www.uspto.gov

Kevin S Dobson
E I du Pont de Nemours & Company
Legal Patents
Wilmington, DE 19898

In re Application of	:
ELWAKIL, Hamdy, et al.	: DECISION ON PETITION
Application No. 10/521,500	: UNDER 37 CFR 1.78(a)(6)
Int'l Filing Date: 20 August 2003	:
Attorney Docket No. AD6907USPCT	:

This is a decision on the petition under 37 CFR §1.78(a)(6), filed November 13, 2006, to accept a under 35 U.S.C. §119(e) for the benefit of the prior-filed application set forth in specification filed previously.

The petition is **DISMISSED AS MOOT**.

The present national phase application has an international filing date of August 20, 2003. It was filed after November 29, 2000, but the claim of benefit of priority to the prior-filed provisional applications was submitted in the originally filed specification, before the expiration of the time period in 37 CFR 1.78(a)(5)(ii). Therefore, this petition is not required.

A corrected Filing Receipt, which includes the priority claim to the prior-filed applications, accompanies this decision on petition.

Any questions concerning this matter may be directed to Erin P. Thomson at (571) 272-3292. All other inquiries concerning either the examination procedures or status of the application should be directed to the Technology Center.

This matter is being referred to Technology Center Art Unit 1774 for appropriate action, including consideration by the examiner of the claim for benefit of the prior-filed applications.

Boris Milef
Legal Examiner
Office of Petitions and PCT Legal Administration

ATTACHMENT : Corrected Filing Receipt

02 MAY 2006

UNITED STATES PATENT AND TRADEMARK OFFICE

Commissioner for Patents
United States Patent and Trademark Office
P.O. Box 1450
Alexandria, VA 22313-1450
www.uspto.gov

DARBY & DARBY
P.O. Box 5257
New York, New York 10150-5257

In re Application of:	:	
HUDYMA, Russell, et. al.	:	
Application No.: 10/521,504	:	DECISION
PCT No.: PCT/US02/22766	:	
Int. Filing Date: 17 July 2002	:	
Priority Date: None	:	
Attorney's Docket No.: 01641/000L589-USO	:	
For: CATADIOPTRIC MULTI-MIRROR SYSTEMS	:	
FOR PROJECTION LITHOGRAPHY	:	

This decision is in response to applicants' "Request For Corrected Filing Receipt" filed 01 February 2006 (and resubmitted on 27 April 2006) seeking correction of the application title. No petition fee is required.

BACKGROUND

On 17 July 2002, applicants filed international application PCT/US02/22766. The application designated the United States, and it did not claim an earlier priority date. The deadline for payment of the basic national fee was thirty months after the international filing date, i.e. 17 January 2005. The title set forth on the published international application is "Catadioptric Multi-Mirror Systems For Projection Lithography."

On 11 January 2005, applicants filed a transmittal letter for entry into the national stage in the United States accompanied by, among other materials, payment of the basic national fee and an Application Data Sheet (ADS). The title set forth on the ADS is the same as that set forth on the published international application, that is, "Catadioptric Multi-Mirror Systems For Projection Lithography."

On 28 July 2005, applicants filed an executed declaration in compliance with 37 CFR 1.497. The title on the declaration differed slightly from the title on the ADS and the international application. Specifically, the title set forth on the declaration is "Catadioptric Multi-Mirror Optical Systems For Projection Lithography."

On 24 January 2006, the United States Designated/Elected Office (DO/EO/US) mailed a Notification Of Acceptance (Form PCT/DO/EO/903) indicating that the requirements of 35 U.S.C. 371(c)(1), (c)(2), and (c)(4) were satisfied as of 28 July 2005.

Also on 24 January 2006, the USPTO issued a filing receipt. The filing receipt identified the title of the present application as "Catadioptric Multi-Mirror Systems For Projection Lithography," that is, the title listed on the ADS and on the published international application.

On 01 February 2006, applicants filed the request for corrected filing receipt considered herein (the request was resubmitted on 27 April 2006). The request asks that the title on the filing receipt be corrected to "Catadioptric Multi-Mirror Optical Systems For Projection Lithography," that is, the title listed on the declaration filed 28 July 2005.

DISCUSSION

Section 1893.03(e)(1) of the Manual Of Patent Examining Procedure (MPEP) states the following regarding the title in U.S. national stage applications:

> [T]he Office will normally use the title of the invention indicated on the cover page of the publication as the title of the national stage application that will appear on the filing receipt. The cover page will include an English translation of the title if the international application was published in a foreign language. See PCT Rule 48.3 (c). Applicants desiring to have the filing receipt reflect a title that is different than the English language title appearing on the cover page must submit either a preliminary amendment amending the title or an application data sheet (37 CFR 1.76) with the desired title.

Here, as set forth in the MPEP, the USPTO has properly assigned the national stage application the "title of the invention indicated on the cover page of the publication" and in the "application data sheet." The title set forth in the filing receipt mailed 24 January 2006 is therefore proper and correction thereof would not be appropriate.

CONCLUSION

Applicants' request for a corrected filing receipt is **DISMISSED** without prejudice. The title of record remains "Catadioptric Multi-Mirror Systems For Projection Lithography," the title listed by applicants on the ADS filed herein and set forth on the published international application.

Richard Ross
Attorney Advisor
Office of PCT Legal Administration
Telephone: (571) 272-3296
Facsimile: (571) 273-0459

UNITED STATES PATENT AND TRADEMARK OFFICE

Commissioner for Patents
United States Patent and Trademark Office
P.O. Box 1450
Alexandria, VA 22313-1450
www.uspto.gov

ANDREW R BASILE
YOUNG & BASILE
3001 WEST BIG BEAVER ROAD
SUITE 624
TROY MI 48084

COPY MAILED

NOV 19 2007

OFFICE OF PETITIONS

In re Application of

HERWIG, Gernot et al.
Application No. 10/521,506
Filed: March 28, 2005
Attorney Docket No. **SHN-120-A**

DECISION ON PETITION
TO WITHDRAW
FROM RECORD

This is a decision on the Request to Withdraw as attorney or agent of record under 37 C.F.R. § 1.36(b), filed September 27, 2007.

The request is **APPROVED**.

A grantable request to withdraw as attorney/agent of record must be signed by every attorney/agent seeking to withdraw or contain a clear indication that one attorney is signing on behalf of another/others. A request to withdraw will not be approved unless at least 30 (thirty) days would remain between the date of approval and the later of the expiration date of a time to file a response or the expiration date of the maximum time period which can be extended under 37 C.F.R. § 1.136(a).

The request was signed by Andrew Basile, the sole attorney of record. Andrew Basile has been withdrawn as attorney or agent of record. Applicant is reminded that there is no attorney of record at this time.

The request to change the correspondence of record is not acceptable as the requested correspondence address is not that of: (1) the first named signing inventor; or (2) an intervening assignee of the entire interest under 37 C.F.R 3.71. All future communications from the Office will be directed to the first named signing inventor at the first copied address below until otherwise properly notified by the applicant.

Telephone inquiries concerning this decision should be directed to Tredelle Jackson at 571-272-2783.

Monica A. Graves
Petitions Examiner
Office of Petitions

cc: **GERNOT HERWIG**
AHORNSTR. 103/1
D-71088 HOLZGERLINGEN, DE

cc: **LAW OFFICE, FACTOR & LAKE, LTD.**
1327 W. WASHINGTON BLVD.
SUITE 5G/H
CHICAGE, IL, 60607-1912

UNITED STATES PATENT AND TRADEMARK OFFICE

OIPE IAP76
NOV 26 2007
PATENT & TRADEMARK OFFICE

Commissioner for Patents
United States Patent and Trademark Office
P.O. Box 1450
Alexandria, VA 22313-1450
www.uspto.gov

ANDREW R BASILE
YOUNG & BASILE
3001 WEST BIG BEAVER ROAD
SUITE 624
TROY MI 48084

COPY MAILED

NOV 19 2007

OFFICE OF PETITIONS

In re Application of	:	
HERWIG, Gernot et al.	:	
Application No. 10/521,506	:	DECISION ON PETITION
Filed: March 28, 2005	:	TO WITHDRAW
Attorney Docket No. **SHN-120-A**	:	FROM RECORD

This is a decision on the Request to Withdraw as attorney or agent of record under 37 C.F.R. § 1.36(b), filed September 27, 2007.

The request is **APPROVED**.

A grantable request to withdraw as attorney/agent of record must be signed by every attorney/agent seeking to withdraw or contain a clear indication that one attorney is signing on behalf of another/others. A request to withdraw will not be approved unless at least 30 (thirty) days would remain between the date of approval and the later of the expiration date of a time to file a response or the expiration date of the maximum time period which can be extended under 37 C.F.R. § 1.136(a).

The request was signed by Andrew Basile, the sole attorney of record. Andrew Basile has been withdrawn as attorney or agent of record. Applicant is reminded that there is no attorney of record at this time.

The request to change the correspondence of record is not acceptable as the requested correspondence address is not that of: (1) the first named signing inventor; or (2) an intervening assignee of the entire interest under 37 C.F.R 3.71. All future communications from the Office will be directed to the first named signing inventor at the first copied address below until otherwise properly notified by the applicant.

Telephone inquiries concerning this decision should be directed to Tredelle Jackson at 571-272-2783.

Monica A. Graves
Petitions Examiner
Office of Petitions

cc: **GERNOT HERWIG**
AHORNSTR. 103/1
D-71088 HOLZGERLINGEN, DE

cc: **LAW OFFICE, FACTOR & LAKE, LTD.**
1327 W. WASHINGTON BLVD.
SUITE 5G/H
CHICAGE, IL, 60607-1912

UNITED STATES PATENT AND TRADEMARK OFFICE

UNITED STATES DEPARTMENT OF COMMERCE
United States Patent and Trademark Office
Address: COMMISSIONER FOR PATENTS
P.O. Box 1450
Alexandria, Virginia 22313-1450
www.uspto.gov

COLLARD & ROE, P.C.
1077 NORTHERN BOULEVARD
ROSLYN, NY 11576

Mail Date: 04/21/2010

Applicant	: Jorg Kuchen	: DECISION ON REQUEST FOR
Patent Number	: 7581682	: RECALCULATION of PATENT
Issue Date	: 09/01/2009	: TERM ADJUSTMENT IN VIEW
Appliction No	: 10/521,510	: OF WYETH AND NOTICE OF INTENT TO
Filed	: 01/18/2005	: ISSUE CERTIFICATE OF CORRECTION
		:

The Request for Recalculation is **GRANTED** to the extent indicated.

The patent term adjustment has been determined to be **338** days. The USPTO will *sua sponte* issue a certificate of correction reflecting the amount of PTA days determined by the recalculation.

Prior to the issuance of the certificate of correction, the USPTO will afford patentee an opportunity to be heard and request reconsideration. Accordingly, patentee has **one month or thirty (30) days**, whichever is longer, to file a request for reconsideration of this patent term adjustment calculation. See 35 U.S.C. 154(b)(3)(B)(ii) and 37 CFR 1.322(a)(4). No extensions of time will be granted under 37 CFR 1.136.

Patentee should use document code PET.OP if electronically filing a request for reconsideration of this patent term adjustment calculation. The patentee must also include the information required by 37 CFR 1.705(b)(2) and the fee required by 37 CFR 1.18(e). If patentee does not file a timely request for reconsideration of this patent term adjustment calculation including the information required by 37 CFR 1.705(b)(2) and the fee required by 37 CFR 1.18(e), the USPTO will issue a certificate of correction reflecting the PTA determination noted above.

Patentee should be aware that in order to preserve the right to review in the United States District Court for the District of Columbia of the USPTO patent term adjustment determination, patentee must ensure that he or she also take the steps required under 35 U.S.C. 154(b)(4)(A) in a timely manner. Nothing in the request for recalculation should be construed as providing an alternative time frame for commencing a civil action under 35 U.S.C. 154(b)(4)(A).

Any questions concerning this decision should be directed to the Office of Patent Legal Administration at 571-272-7702.

UNITED STATES PATENT AND TRADEMARK OFFICE

Commissioner for Patents
United States Patent and Trademark Office
P.O. Box 1450
Alexandria, VA 22313-1450
www.uspto.gov

15 AUG 2007

Goodwin Procter
103 Eisenhower Parkway
Roseland NJ 07068

In re Application of	:	
SNYDER, Randall A. et al.	:	
Application No.: 10/521,520	:	
PCT No.: PCTUS2003/023643	:	
Int. Filing Date: 18 July 2003	:	DECISION
Priority Date: 18 July 2002	:	
Attorney Docket No.: 6783P104	:	
For: WIRELESS MESSAGING ADDRESS	:	
SYSTEM AND METHOD	:	

This is a decision on applicants' "Petition For Revival of International Application For Patent Abandoned Unintentionally Under 37 CFR 1.137(b)" filed in the United States Patent and Trademark Office on 23 February 2007.

BACKGROUND

On 28 November 2005, the Office mailed Notification of Missing Requirements (Form PCT/DO/EO/905) indicating that the declaration submitted by applicants was not in compliance as the name of inventor "Mike Pirie" had been changed to "Michael Pirie" and there was not a Recording of a Change (Form PCT/IB306) in the application.

On 12 July 2006, the Office mailed Notification of Abandonment (Form PCT/DO/EO/909) indicating the application went abandoned for failure to timely reply to the Notification of Missing Requirements.

On 23 February 2007, applicants submitted this petition to revive accompanied by a declaration executed by "Michael Pirie" listing "Michael Pirie" as the fourth named inventor.

DISCUSSION

A petition to revive an abandoned application under 37 CFR 1.137(b) must be filed without intentional delay from the time the application became abandoned and/or applicant first became aware of the abandoned status of the application. A petition under 37 CFR 1.137(b) must be accompanied by (1) a statement that the entire delay in filing the required reply from the due date for the reply until the filing of a grantable petition was unintentional, (2) a proposed response, (3) the petition fee required by law (37 CFR 1.17(m)), and (4) a terminal disclaimer and fee (if the international application was filed prior to June 8, 1995).

Items (1), (3) and (4) have been satisfied. Applicants have made the necessary statement and paid the petition fee. A terminal disclaimer is not required as this application was filed on or after 08 June 1995.

Item (2) has not been satisfied. This application went abandoned for failure to timely supply an oath or declaration in compliance with 37 CFR 1.497(a)-(b). By submitting a declaration executed by "Michael" Pirie and not "Mike" Pirie, applicants appear to be indicating that he was improperly identified in the international phase. A petition under 37 CFR 1.182 is the appropriate way to correct this error. See MPEP 605.04(c).

The $400 fee for a petition under 37 CFR 1.182 and a statement from the inventor stating his name and indicating that the error occurred without deceptive intent on his part are required, if the indication was an error. If his name has changed, then an explanation of the method by which it changed is required.

CONCLUSION

Applicant's petition under 37 CFR 1.137(b) is **DISMISSED** without prejudice.

A proper response in the form of an oath or declaration in compliance with 37 CFR 1.497(a)-(b) or a petition under 37 CFR 1.182 is required within TWO (2) MONTHS from the mail date of this decision. Failure to timely file the proper response will result in abandonment of this application. Extensions of time are available under 37 CFR 1.136(a).

Any further correspondence with respect to this matter should be addressed to the Mail Stop PCT, Commissioner for Patents, Office of PCT Legal Administration, P.O. Box 1450, Alexandria, Virginia 22313-1450, with the contents of the letter marked to the attention of the Office of PCT Legal Administration.

Erin P. Thomson

Erin P. Thomson
Attorney Advisor
PCT Legal Administration

Telephone: 571-272-3292
Facsimile: 571-273-0459

0 5 FEB 2008

UNITED STATES PATENT AND TRADEMARK OFFICE

Commissioner for Patents
United States Patent and Trademark Office
P.O. Box 1450
Alexandria, VA 22313-1450
www.uspto.gov

BLAKELY SOKOLOFF TAYLOR & ZAFMAN
1279 OAKMEAD PARKWAY
SUNNYVALE, CA 94085-4040

In re Application of	:	
SNYDER, Randall A. et al.	:	
Application No.: 10/521,520	:	
PCT No.: PCT/US2003/023643	:	
Int. Filing Date: 18 July 2003	:	DECISION
Priority Date: 18 July 2002	:	
Attorney Docket No.: 6783P104	:	
For: WIRELESS MESSAGING ADDRESS	:	
SYSTEM AND METHOD	:	

This is a decision on applicants' "Petition For Revival of International Application For Patent Abandoned Unintentionally Under 37 CFR 1.137(b)" filed in the United States Patent and Trademark Office on 23 February 2007.

BACKGROUND

On 15 August 2007, the Office mailed Decision on Petition, dismissing applicants' petition under 37 CFR 1.137(b) as the proper response had not yet been furnished.

On 22 October 2007, applicants submitted a petition under 37 CFR 1.182.

DISCUSSION

A petition to revive an abandoned application under 37 CFR 1.137(b) must be filed without intentional delay from the time the application became abandoned and/or applicant first became aware of the abandoned status of the application. A petition under 37 CFR 1.137(b) must be accompanied by (1) a statement that the entire delay in filing the required reply from the due date for the reply until the filing of a grantable petition was unintentional, (2) a proposed response, (3) the petition fee required by law (37 CFR 1.17(m)), and (4) a terminal disclaimer and fee (if the international application was filed prior to June 8, 1995).

Items (1), (3) and (4) have been satisfied. Applicants have made the necessary statement and paid the petition fee. A terminal disclaimer is not required as this application was filed on or after 08 June 1995.

Item (2) has now been satisfied. This application went abandoned for failure to timely supply an oath or declaration in compliance with 37 CFR 1.497(a)-(b). Applicants have now supplied a petition under 37 CFR 1.182 to correct an error in naming inventor Pirie in the international application. See MPEP 605.04(c).

The fee for the petition under 37 CFR 1.182 will be charged to deposit account no. 02-2666, as authorized. The petition states that the inventor Pirie is properly named "Michael Pirie," not "Mike Pirie" and that the error in naming him occurred without deceptive intention on his part. This petition in combination with the earlier declarations satisfies the requirements of 37 CFR 1.497(a)-(b).

CONCLUSION

Applicants' petitions under 37 CFR 1.182 and 1.137(b) are **GRANTED**.

This application is being referred to the National Phase Processing Branch of the Office of Patent Application Processing for further action consistent with this decision. The application has a 35 USC 371(c)(1), (c)(2) and (c)(4) date of 23 February 2007.

/Erin P. Thomson/

Erin P. Thomson
Attorney Advisor
PCT Legal Administration

Telephone: 571-272-3292
Facsimile: 571-273-0459

UNITED STATES PATENT AND TRADEMARK OFFICE

Commissioner for Patents
United States Patent and Trademark Office
P.O. Box 1450
Alexandria, VA 22313-1450
www.uspto.gov

MAILED

JUN 22 2010

OFFICE OF PETITIONS

ARENT FOX LLP
1050 CONNECTICUT AVENUE, N.W.
SUITE 400
WASHINGTON DC 20036

In re Application of:	:	
Randall SNYDER et al.	:	
Application No. 10/521,520	:	DECISION ON PETITION
Filed: February 23, 2005	:	
Attorney Docket No. 6783P104	:	

This is a decision on the petition under 37 CFR 1.137(b), filed March 24, 2010, to revive the above-identified application.

The petition is GRANTED.

The application became abandoned for failure to reply in a timely manner within the meaning of 37 CFR 1.113 to the final Office action mailed September 22, 2009, which set a shortened statutory period for reply of three (3) months. A reply was due on or before December 22, 2009, or on or before March 22, 2010 with the submission of an extension of time fee pursuant to the provisions of 37 CFR 1.136(a). A request for a three-month extension of time under the provisions of 37 CFR 1.136(a) was filed on March 22, 2010. However, as the amendment filed concurrently therewith could not be timely acted upon, the application became abandoned on December 23, 2009.

The petition satisfies the conditions for revival pursuant to the provisions of 37 CFR 1.137(b) in that (1) the reply in the form of an amendment, Request for Continued Examination (RCE), and the required fees; (2) the petition fee of $810; and (3) the required statement of unintentional delay have been received. Accordingly, the reply to the final Office Action of September 22, 2009 is accepted as having been unintentionally delayed.

The $555.00 extension of time fee submitted on March 22, 2010 will be credited to the Deposit Account 01-2300, as authorized.

It is not apparent whether the person signing the statement of unintentional delay was in a position to have firsthand or direct knowledge of the facts and circumstances of the delay at issue. Nevertheless, such statement is being treated as having been made as the result of a reasonable inquiry into the facts and circumstances of such delay. See 37 CFR 10.18(b) and Changes to Patent Practice and Procedure; Final Rule Notice, 62 Fed. Reg. 53131, 53178 (October 10, 1997), 1203 Off. Gaz. Pat. Office 63, 103 (October 21, 1997). In the event that such an inquiry has not been made, petitioner must make such an inquiry. If such inquiry results in the discovery that it is not correct that the entire delay in filing the required reply from the due date for the reply until the filing of a grantable petition pursuant to 37 CFR 1.137(b) was unintentional, petitioner must notify the Office.

Telephone inquiries concerning this decision should be directed to Shahid Alam at (571) 272-6052 or in his absence to the undersigned at (571) 272-4914.

The application file is being referred to Technology Center AU 2617 for appropriate action on the RCE filed concurrently with the instant petition.

Ramesh Krishnamurthy

Ramesh Krishnamurthy
Petitions Examiner
Office of Petitions

UNITED STATES PATENT AND TRADEMARK OFFICE

Commissioner for Patents
United States Patent and Trademark Office
P.O. Box 1450
Alexandria, VA 22313-1450
www.uspto.gov
DIW Jul-07

BLAKELY SOKOLOFF TAYLOR & ZAFMAN
1279 OAKMEAD PARKWAY
SUNNYVALE CA 94085-4040

COPY MAILED

JUL 25 2007

OFFICE OF PETITIONS

In re Application of	:	
Trioano et al.	:	
Application No. 10/521521	:	DECISION ON PETITION
Filed: 01/18/2005	:	
Atty Docket No. 104222-320-PCT	:	
	:	

This is a decision on the petition filed on 29 May, 2007, under 37 CFR 1.137(b), [1] to revive the above-identified application.

The petition is **GRANTED**.

The application became abandoned on 25 March, 2007, for failure to timely submit a proper reply to the final Office action mailed on 24 October, 2006, which set a three (3) month shortened statutory period for reply. A two (2) month extension of time was filed on 29 March, 2007 (certificate of mailing date 26 March, 2007), along with an amendment after final rejection. The

---

[1] Effective December 1, 1997, the provisions of 37 CFR 1.137(b) now provide that where the delay in reply was unintentional, a petition may be filed to revive an abandoned application or a lapsed patent pursuant to 37 CFR 1.137(b). A grantable petition filed under the provisions of 37 CFR 1.137(b) must be accompanied by:

(1) the required reply, unless previously filed. In a nonprovisional application abandoned for failure to prosecute, the required reply may be met by the filing of a continuing application. In a nonprovisional utility or plant application filed on or after June 8, 1995, and abandoned for failure to prosecute, the required reply may also be met by the filing of a request for continuing examination in compliance with § 1.114. In an application or patent, abandoned or lapsed for failure to pay the issue fee or any portion thereof, the required reply must be the payment of the issue fee or any outstanding balance thereof. In an application, abandoned for failure to pay the publication fee, the required reply must include payment of the publication fee.

(2) the petition fee as set forth in 37 CFR 1.17(m);

(3) a statement that the entire delay in filing the required reply from the due date for the reply until the filing of a grantable petition pursuant to 37 CFR 1.137(b) was unintentional. The Commissioner may required additional information where there is a question whether the delay was unintentional; and

(4) any terminal disclaimer (and fee as set forth in 37 CFR 1.20(d)) required pursuant to 37 CFR 1.137(c)).

filing of the present petition precedes the mailing of Notice of Abandonment.

Petitioner has filed a Request for Continued Examination (RCE) and an amendment as the required reply under 37 CFR 1.114.

This application is being referred to Technology Center 2617 for further processing.

Telephone inquiries concerning this matter may be directed to the undersigned at (571)272-3231.

D Wood

Douglas I. Wood
Senior Petitions Attorney
Office of Petitions

UNITED STATES PATENT AND TRADEMARK OFFICE

Commissioner for Patents
United States Patent and Trademark Office
P.O. Box 1450
Alexandria, VA 22313-1450
www.uspto.gov

BRINKS HOFER GILSON &
LIONE/INFINEON
INFINEON
PO BOX 10395
CHICAGO IL 60610

MAILED

JUL 26 2010

OFFICE OF PETITIONS

In re	: DECISION ON
Kakoschke, et al.	: REQUEST FOR RECONSIDERATION
Application No. 10/521,528	: of PATENT TERM ADJUSTMENT
Filed: November 3, 2005	:
Attorney Docket No. 10808/208	:

This is a decision on the "NOTICE OF POSSIBLE PTA ERROR", filed January 20, 2010, requesting that the patent term adjustment indicated on the above-identified patent be recalculated.

The petition to correct the patent term adjustment indicated on the above-identified patent is **GRANTED to the extent indicated herein.**

On October 20, 2009, the Office mailed the Determination of Patent Term Adjustment under 35 U.S.C. 154(b) in the above-identified application. The Notice stated that the patent term adjustment to date was two hundred ninety (290) days.

The Office initially determined a patent term adjustment of two hundred ninety (290) days based on an adjustment for PTO delay of three hundred sixteen (316) days pursuant to 35 U.S.C. 154(b)(1)(A)(i) and 37 C.F.R. 1.703(a)(1), reduced by twenty days of applicant delay pursuant to 37 CFR 1.704(b).

However, a review of the file reveals that Applicants should have been assessed additional delay of thirty-nine (39) days. Applicants filed an RCE on August 7, 2009. Subsequently, applicants filed an IDS on September 15, 2009. Accordingly, pursuant to 37 CFR 1.704(c)(8), Applicant delay of 39 days should have been assessed.

In view thereof, the correct number of days of patent term adjustment is two hundred fifty-seven (257) days (316 days of PTO delay, reduced by 59 (20+39) days of Applicant delay).

The application is being forwarded to the Office of Data Management for processing into a patent.

Telephone inquiries specific to this matter should be directed to Petitions Attorney Cliff Congo, at (571) 272-3207.

Anthony Knight
Supervisor
Office of Petitions

Enclosure: Copy of Revised PAIR Screen

Day : Sunday
Date: 7/25/2010

PALM INTRANET

Time: 13:05:28

PTA Calculations for Application: 10/521528			
Application Filing Date:	11/03/2005	PTO Delay (PTO):	316
Issue Date of Patent:		Three Years:	0
Pre-Issue Petitions:	0	Applicant Delay (APPL):	20
Post-Issue Petitions:	0	Total PTA (days):	257
PTO Delay Adjustment:	-39		

File Contents History

Number	Date	Contents Description	PTO	APPL	START
84	07/25/2010	ADJUSTMENT OF PTA CALCULATION BY PTO		39	
71	10/20/2009	MAIL NOTICE OF ALLOWANCE			
70	10/19/2009	ISSUE REVISION COMPLETED			
69	10/19/2009	NOTICE OF ALLOWANCE DATA VERIFICATION COMPLETED			
68	10/19/2009	CASE DOCKETED TO EXAMINER IN GAU			
67	10/19/2009	EXAMINER'S AMENDMENT COMMUNICATION			
66	10/19/2009	DOCUMENT VERIFICATION			
65	10/08/2009	NOTICE OF ALLOWABILITY			
64	09/15/2009	INFORMATION DISCLOSURE STATEMENT CONSIDERED			
63	09/15/2009	INFORMATION DISCLOSURE STATEMENT (IDS) FILED			
62	08/11/2009	DATE FORWARDED TO EXAMINER			
61	08/07/2009	AMENDMENT SUBMITTED/ENTERED WITH FILING OF CPA/RCE			
60	08/11/2009	DATE FORWARDED TO EXAMINER			
59	08/07/2009	REQUEST FOR CONTINUED EXAMINATION (RCE)			
58	08/11/2009	DISPOSAL FOR A RCE / CPA / R129			
57	08/07/2009	WORKFLOW - REQUEST FOR RCE - BEGIN			
56	07/13/2009	MAIL ADVISORY ACTION (PTOL - 303)			
55	07/13/2009	ADVISORY ACTION (PTOL-303)			
54	07/09/2009	DATE FORWARDED TO EXAMINER			
53	07/07/2009	AMENDMENT AFTER FINAL REJECTION			
52	05/07/2009	MAIL FINAL REJECTION (PTOL - 326)			
51	05/06/2009	FINAL REJECTION			

50	03/27/2009	INFORMATION DISCLOSURE STATEMENT CONSIDERED			
49	03/06/2009	INFORMATION DISCLOSURE STATEMENT (IDS) FILED			
48	04/19/2009	DATE FORWARDED TO EXAMINER			
47	03/26/2009	AMENDMENT AFTER FINAL REJECTION			
46	03/27/2009	INFORMATION DISCLOSURE STATEMENT (IDS) FILED			
45	01/28/2009	MAIL FINAL REJECTION (PTOL - 326)			
44	01/26/2009	FINAL REJECTION			
43	11/19/2008	DATE FORWARDED TO EXAMINER			
42	10/23/2008	RESPONSE AFTER NON-FINAL ACTION		20	40
41	10/23/2008	REQUEST FOR EXTENSION OF TIME - GRANTED			
40	07/03/2008	MAIL NON-FINAL REJECTION			
39	07/02/2008	NON-FINAL REJECTION			
38	06/05/2008	DATE FORWARDED TO EXAMINER			
37	04/21/2008	RESPONSE TO ELECTION / RESTRICTION FILED			
36	03/19/2008	MAIL RESTRICTION REQUIREMENT			
35	03/17/2008	REQUIREMENT FOR RESTRICTION / ELECTION			
30	01/16/2008	DATE FORWARDED TO EXAMINER			
29	12/20/2007	RESPONSE TO ELECTION / RESTRICTION FILED			
28	11/15/2007	MAIL RESTRICTION REQUIREMENT	316		9
27	11/13/2007	REQUIREMENT FOR RESTRICTION / ELECTION			
26	07/19/2007	CASE DOCKETED TO EXAMINER IN GAU			
23	10/19/2006	CASE DOCKETED TO EXAMINER IN GAU			
22	07/25/2006	IFW TSS PROCESSING BY TECH CENTER COMPLETE			
21	07/25/2006	CASE DOCKETED TO EXAMINER IN GAU			
19	11/03/2005	REFERENCE CAPTURE ON IDS			
16	07/11/2006	TRANSFER INQUIRY TO GAU			
15	06/01/2006	TRANSFER INQUIRY TO GAU			
14	05/25/2006	TRANSFER INQUIRY TO GAU			
13	03/11/2006	CLEARED BY OIPE CSR			
12	03/11/2006	CLEARED BY OIPE CSR			
11	03/11/2006	CLEARED BY OIPE CSR			
10	03/11/2006	CLEARED BY OIPE CSR			
9	11/03/2005	371 COMPLETION DATE			
8	01/24/2006	APPLICATION DISPATCHED FROM OIPE			

7	01/24/2006	NOTICE OF DO/EO ACCEPTANCE MAILED			
6	11/03/2005	ADDITIONAL APPLICATION FILING FEES			
5	11/03/2005	TRANSLATION OF ANNEXES TO THE INTERNATIONAL PRELIMINARY EXAMINATION REPORT INTO ENGLISH			
4	11/03/2005	A STATEMENT BY ONE OR MORE INVENTORS SATISFYING THE REQUIREMENT UNDER 35 USC 115, OATH OF THE APPLIC			

Search Another: Application# [ ] Search

EXPLANATION OF PTA CALCULATION

EXPLANATION OF PTE CALCULATION

To go back, right click here and select Back. To go forward, right click here and select Forward. To refresh, right click here and select Refresh.

Back to OASIS | Home page

#5

UNITED STATES PATENT AND TRADEMARK OFFICE

Commissioner for Patents
United States Patent and Trademark Office
P.O. Box 1450
Alexandria, VA 22313-1450
www.uspto.gov

21 FEB 2006

Troxell K. Snyder
Otis Elevator Company
10 Farm Springs
Farmington CT 06032

In re Application of	:	
SHIBASAKI	:	
Application No.: 10/521,539	:	DECISION
PCT No.: PCT/US03/19856	:	
Int. Filing Date: 23 June 2003	:	
Priority Date: 16 July 2002	:	
Attorney's Docket No.: OT-5055	:	
For: CONICAL SPRING BUFFER FOR AN	:	
ELEVATOR	:	

This decision is in response to applicant's submission filed via facsimile transmission on 29 August 2005.

BACKGROUND

On 23 June 2003, applicants filed international application PCT/US03/19856, which designated the U.S. and claimed a priority date of 16 July 2002. A copy of the international application was communicated to the USPTO from the International Bureau on 22 January 2004. The thirty-month period for paying the basic national fee in the United States expired at midnight on 18 January 2005 (16 January 2005 being a Sunday and 17 January 2005 being a Federal holiday).

On 14 January 2005, applicants filed a submission for entry into the national stage in the United States which was accompanied by, *inter alia*, the U.S. Basic National Fee.

On 09 August 2005, the USPTO mailed a NOTIFICATION OF MISSING REQUIREMENTS UNDER 35 U.S.C. 371 (Form PCT/DO/EO/905) indicating, *inter alia*, that an oath or declaration in compliance with 37 CFR 1.497(a)-(b) and the surcharge under 37 CFR 1.492(e) for filing the oath or declaration later than thirty months from the earliest priority date were required. This NOTIFICATION set a two month extendable period for reply.

On 29 August 2005, applicant filed the instant submission via facsimile transmission.

DISCUSSION

The NOTIFICATION OF MISSING REQUIREMENTS mailed 09 August 2005 indicated that the declaration of inventorship under PCT Rule 4.17 was defective because it failed to identify the application to which it was directed. However, the declaration was filed with the filing of the international application and thus is directed to that international application. Therefore, the declaration filed under PCT Rule 4.17 with the international application on 23 June 2003 is proper. Accordingly, the NOTIFICATION OF MISSING REQUIREMENTS mailed 09 August 2005 is hereby VACATED.

CONCLUSION

For the reasons set forth above, the NOTIFICATION OF MISSING REQUIREMENTS mailed 09 August 2005 is VACATED.

This application is being forwarded to the National Stage Processing Branch of the Office of PCT Operations to continue national stage processing of the application in accordance with this decision.

Daniel Stemmer
Legal Examiner
PCT Legal Affairs
Office of Patent Cooperation Treaty
Legal Administration
Telephone: (571) 272-3301
Facsimile: (571) 273-0459

UNITED STATES PATENT AND TRADEMARK OFFICE

Commissioner for Patents
United States Patent and Trademark Office
P.O. Box 1450
Alexandria, VA 22313-1450
www.uspto.gov

IPLA P.A.
3580 WILSHIRE BLVD.
17TH FLOOR
LOS ANGELES CA 90010

COPY MAILED

MAY 0 2 2008

OFFICE OF PETITIONS

In re Application of	:	
Koang-Ho Jo	:	
Application No. 10/521,541	:	DECISION GRANTING PETITION
Filed: January 14, 2005	:	UNDER 37 CFR 1.137(b)
Attorney Docket No. 2058-07	:	

This is a decision on the petition under 37 CFR 1.137(b), filed September 19, 2007, to revive the above-identified application.

The petition is **GRANTED**.

The petition satisfies the conditions for revival pursuant to the provisions of 37 CFR 1.137(b) in that (1) the reply in the form of replacement drawings; (2) the petition fee; and (3) the required statement of unintentional delay have been received. Accordingly, the reply to the Notice of Allowance/Notice of Allowability mailed May 14, 2007, is accepted as having been unintentionally delayed.

Telephone inquiries concerning this decision should be directed to the undersigned at (571) 272-3208.

This matter is being referred to the Office of Data Management and for review of the drawings received September 19, 2007.

Karen Creasy

Karen Creasy
Petitions Examiner
Office of Petitions

UNITED STATES PATENT AND TRADEMARK OFFICE

2 3 SEP 2008

Commissioner for Patents
United States Patent and Trademark Office
P.O. Box 1450
Alexandria, VA 22313-1450
www.uspto.gov

Mitchell Shapiro
Miles & Stuckbridge P.C.
1751 Pinnacle Dr
Suite 500
McLean VA 22102-3833

In re Application of:	:	
TAKAHASHI et al.	:	
US Application No.: 10/521,553	:	
PCT Application No.: PCT/JP2002/008757	:	
Int. Filing Date: 29 August 2002	:	DECISION
Atty Docket No.: XA-10261	:	
For: SEMICONDUCTOR PROCESSING DEVICE AND IC CARD	:	

This is in response to applicants' "PETITION TO VACATE NOTIFICATION OF ABANDONMENT" filed on 13 April 2007, which is being treated as a petition under 37 CFR 1.181. No petition fee is required.

BACKGROUND

On 29 August 2002, applicants filed international application PCT/JP2002/008757. On 19 January 2005, applicants filed national stage papers in the United States Designated/Elected Office (DO/EO/US). The submission was accompanied by, inter alia, the basic national fee required by 35 U.S.C. 371 (C)(1).

On 26 July 2005, the DO/EO/US mailed a Notification of Missing Requirement Under 35 U.S.C. 371 in the United States Designated/Elected Office (DO/EO/US), which required an executed declaration and an English translation of the claims.

On 26 October 2005, applicant submitted an executed oath and the surcharge fee of $130.

On 04 August 2006, the DO/EO/US mailed a Notification of Defective Response (PCT/DO/EO/US), which required the submission of the translation of the original claims with a surcharge.

On 29 March 2007, the DO/EO/US mailed a Notification of Abandonment (PCT/DO/EO/909).

On 13 April 2007, applicants filed the present petition to vacate the Notification of Abandonment.

DISCUSSION

A review of the application file reveals that the applicant submitted a response on 05 September 2006, the time limit for reply as required by the Notification of Defective Response. The response filed on 05 September 2006 included a translation of the original set of claims and a translation of the International Preliminary Examination Report (IPER). Therefore, the Notice of Abandonment was issued in error and is hereby VACATED. .

CONCLUSION

For the reason above, the petition under 37 CFR 1.181 is **GRANTED**.

This application is being forwarded to the United States Designated/Elected Office (DO/EO/US) for further processing in accordance with this decision. The 35 U.S.C. 371 (c)(1),(c)(2) and (c)(4) date is 05 September 2006.

Shian Luong
PCT Special Programs Examiner
Office of PCT Legal Administration
Telephone: (571) 272-4557
Fax: (571) 273-0459

Richard Cole
PCT Legal Examiner
Office of PCT Legal Administration

On 13 April 2007, applicants filed the present petition to vacate the Notification of Abandonment.

DISCUSSION

A review of the application file reveals that the applicant submitted a response on 05 September 2006, the time limit for reply as required by the Notification of Defective Response. The response filed on 05 September 2006 included a translation of the original set of claims and a translation of the International Preliminary Examination Report (IPER). Therefore, the Notice of Abandonment was issued in error and is hereby VACATED. .

CONCLUSION

For the reason above, the petition under 37 CFR 1.181 is **GRANTED**.

This application is being forwarded to the United States Designated/Elected Office (DO/EO/US) for further processing in accordance with this decision. The 35 U.S.C. 371 (c)(1),(c)(2) and (c)(4) date is 05 September 2006.

Shian Luong
PCT Special Programs Examiner
Office of PCT Legal Administration
Telephone: (571) 272-4557
Fax: (571) 273-0459

Richard Cole
PCT Legal Examiner
Office of PCT Legal Administration

UNITED STATES PATENT AND TRADEMARK OFFICE

Commissioner for Patents
United States Patent and Trademark Office
P.O. Box 1450
Alexandria, VA 22313-1450
www.uspto.gov

WESTERMAN, HATTORI, DANIELS & ADRIAN, LLP
1250 CONNECTICUT AVENUE, NW
SUITE 700
WASHINGTON DC 20036

COPY MAILED

DEC 3 1 2007

OFFICE OF PETITIONS

In re Application of	:	
Pierre Doublet	:	
Application No. 10/521,555	:	DECISION ON PETITION
Filed: January 19, 2005	:	
Attorney Docket No. 052014	:	

This is a decision on the petition, filed December 19, 2007, which is being treated as a petition under 37 CFR 1.181, requesting withdrawal of the holding of abandonment in the above-identified application.

The petition is **GRANTED**.

This application was held abandoned for failure to timely respond to the Office action of June 6, 2007, which set a three (3) month shortened statutory period for reply. Accordingly, a reply was due on or before September 6, 2007.

Petitioner states that a timely reply along with a three month extension of time were submitted on December 6, 2007. Petitioner contends a review of the PAIR system shows that a reply was timely submitted.

A review of the record shows that a reply to the June 6, 2007 Office action in the form of an amendment, drawings, amendment to the specification and request for three month extension of time (accompanying fee) were received in the Office on December 6, 2007.

In light of receipt of the timely reply, the holding of abandonment for failure to timely file a reply to the Office action of June 6, 2007 is hereby withdrawn and the application restored to pending status.

This application is being referred to Technology Center AU 1794 for appropriate action in the normal course of business on the reply received on December 6, 2007.

Charlema Grant

Charlema Grant
Petitions Attorney
Office of Petitions

SPE RESPONSE FOR CERTIFICATE OF CORRECTION

Paper No.: _____

DATE : 05-21-09

TO SPE OF : ART UNIT 3748

SUBJECT : Request for Certificate of Correction for Appl. No.: 10/521556 Patent No.: 7363889

Please respond to this request for a certificate of correction within 7 days.

FOR IFW FILES:

Please review the requested changes/corrections as shown in the **COCIN** document(s) in the IFW application image. No new matter should be introduced, nor should the scope or meaning of the claims be changed.

Please complete the response (see below) and forward the completed response to scanning using document code **COCX**.

FOR PAPER FILES:

Please review the requested changes/corrections as shown in the attached certificate of correction. Please complete this form (see below) and forward it with the file to:

Certificates of Correction Branch (CofC)
South Tower - 9A22
Palm Location 7580

Angela Green
Certificates of Correction Branch
703-756-1541

Thank You For Your Assistance

The request for issuing the above-identified correction(s) is hereby:
Note your decision on the appropriate box.

- ☐ **Approved** — **All** changes apply.
- ☐ **Approved in Part** — Specify below which changes **do not** apply.
- ☐ **Denied** — State the reasons for denial below.

Comments: _____

THOMAS DENION
SUPERVISORY PATENT EXAMINER
TECHNOLOGY CENTER 3700

Thomas Denion — SPE

3748 — Art Unit

#20

UNITED STATES PATENT AND TRADEMARK OFFICE

Commissioner for Patents
United States Patent and Trademark Office
P.O. Box 1450
Alexandria, VA 22313-1450
www.uspto.gov

26 SEP 2006

Proshauer Rose LLP
1001 Pennsylvania Avenue, NW
Suite 400 South
Washington, D.C. 20004

In re Application of	:	
DALE et al.	:	
Application No.: 10/521,571	:	
PCT No.: PCT/AU03/00919	:	DECISION ON PETITION
Int. Filing Date: 17 July 2003	:	UNDER
Priority Date: 17 July 2002	:	37 CFR 1.181
Atty. Docket No.: 21415-0013	:	&
For: TRANSCRIPTIONAL CONTROL	:	37 CFR 1.137(b)
ELEMENT, CHIMERIC	:	
CONSTRUCTS AND USES		
THEREFOR		

This decision is issued in response to applicant's "Petition to Withdraw Holding of Abandonment and, in the alternative, Petition to Revive Unintentionally Abandoned Application" filed 14 August 2006.

BACKGROUND

On 17 July 2003, applicant filed international application no. PCT/AU03/00919 which claimed a priority date of 17 July 2002. A copy of the international application was communicated to the United States Patent and Trademark Office from the International Bureau on 22 January 2004. Pursuant to 37 CFR 1.495, the deadline for payment of the basic national fee in the United States was to expire 30 months from the priority date, 17 January 2005.

On 18 January 2005, applicant filed a transmittal for entry into the national stage in the United States, which accompanied by, inter alia: the requisite basic national fee as required by 35 U.S.C. 371(c)(1); a copy of the international application; an application data sheet; and a preliminary amendment.

On 16 May 2005, applicant filed an executed declaration of inventors.

On 08 June 2005, the United States Designated/Elected Office (DO/EO/US) mailed a Notification to Comply with Requirements for Patent Applications Containing Nucleotide and/or Amino Acid Sequence Disclosures (Form PCT/DO/EO/922) indicating that a sequence listing in compliance with 37 CFR 1.821-1.825 had not been filed. The notification set a two-month time limit in which to respond.

On 13 February 2006, the United States Designated/Elected Office (DO/EO/US) mailed a Notification of Defective Response (Form PCT/DO/EO/916) indicating that the "a copy of sequence listing in computer readable form has been submitted, however, the content of the computer readable form does not comply with the requirements of 37 CFR 1.822 and/or 1.823." Applicant was required to respond within one-month from the date of the notification or within the time remaining in the Notification to Comply with Requirements for Patent Applications Containing Nucleotide and/or Amino Acid Sequence Disclosures (Form PCT/DO/EO/922).

On 08 March 2006, applicant filed "Statement to Support Filing and Submission in accordance with 37 CFR 1.821-1.825."

On 05 June 2006, the United States Designated/Elected Office (DO/EO/US) mailed a Notification of Abandonment (Form PCT/DO/EO/909) indicating that the application was abandoned for failure to file a complete response to the Notification to Comply with Requirements for Patent Applications Containing Nucleotide and/or Amino Acid Sequence Disclosures (Form PCT/DO/EO/922) mailed 08 June 2005 within the time period set therein.

On 14 August 2006, applicant filed "Petition to Withdraw Holding of Abandonment and, in the alternative, Petition to Revive Unintentionally Abandoned Application" which included a submission in accordance with 37 CFR 1.821-1.825.

On 07 September 2006, the PALM Database indicated that a compliant computer readable form (CRF) had been submitted.

DISCUSSION

Petition to Withdraw Holding of Abandonment under 37 CFR 1.181

The above-identified application was abandoned for failure to file a complete response to the Notification to Comply with Requirements for Patent Applications Containing Nucleotide and/or Amino Acid Sequence Disclosures (Form PCT/DO/EO/922) mailed 08 June 2005, in that, the sequence listing in computer readable form complying with 37 CFR 1.821-1.825 had not been submitted within the period set therein.

Petitioner states that a response to the Notification Defective Response was filed on 08 March 2006. A review of the application file reveals that the Computer Readable Form filed 08 March 2006 had "detected errors" and was not considered a proper response to the Notification of Defective Response. Since the time-limit to respond to the Notification to Comply with Requirements for Patent Applications Containing Nucleotide and/or Amino Acid Sequence Disclosures (Form PCT/DO/EO/922) had elapsed, a Notification of Abandonment was mailed on 05 June 2006.

Further, petitioner states that "if there was a defect in the 08 March 2006 response, applicant should have been give a time limit to respond as per 37 CFR 1.135(c)." Petitioner's argument is incorrect. The Manual of Patent Examining Procedure §714.03,

page 700-231, states that "once an inadvertent omission is brought to the attention of the applicant, the question of inadvertence no longer exists. Therefore, a second Office action giving another new (1 month) time period to supply the omission would not be appropriate under 37 CFR 1.135(c).

Therefore, the USPTO was correct in mailing the Notification of Abandonment dated 05 June 2006 and the petition may not be properly granted.

Petition to Revive Under 37 CFR 1.137(b)

A petition under 37 CFR 1.137(b) requesting that the application be revived on the grounds of unintentional abandonment must be accompanied by (1) the required reply, (2) the petition fee required by law, (3) a statement that the "entire delay in filing the required reply from the due date for the reply until the filing of a grantable petition was unintentional," and (4) any terminal disclaimer and fee required pursuant to 37 CFR 1.137(c).

With regard to Item (1), the proper response was the required sequence listing pursuant to 37 CFR 1.821-1.825.

As to Item (2), the appropriate petition fee of $750.00 as required by 37 CFR 1.17) will be charged to Deposit Account No. 50-3840.

With regard to Item (3), applicant's statement that "the abandonment was unintentional" does not comply with 37 CFR 1.137(b)(3). However, the statement will be accepted and construed as meaning that "entire delay in filing the required reply from the due date for the reply until the filing of this petition under 37 CFR 1.137(b) was unintentional." If this is an incorrect interpretation in view of the rules, Petitioner is required to provide a statement to that effect.

As to Item (4), the terminal disclaimer is not required since this application was filed after 08 June 1995.

A review of the application file reveals that, with the filing of the present petition and accompanying papers, a proper response has been submitted and all of the requirements of 37 CFR 1.137(b) for revival have been satisfied and revival is therefore appropriate.

CONCLUSION

For the reasons above, the petition to withdraw the holding of abandonment under 37 CFR 1.181 is **DISMISSED** without prejudice.

The petition to revive under 37 CFR 1.137(b) is **GRANTED**.

This application is being returned to the United States/Elected Office for processing in accordance with this decision.

Anthony Smith
Attorney-Advisor
Office of PCT Legal Administration
Telephone: 571-272-3298
Fax: 571-273-0459

UNITED STATES PATENT AND TRADEMARK OFFICE

UNITED STATES DEPARTMENT OF COMMERCE
United States Patent and Trademark Office
Address: COMMISSIONER FOR PATENTS
P.O. Box 1450
Alexandria, Virginia 22313-1450
www.uspto.gov

PROSKAUER ROSE LLP
One International Place
Boston, MA 02110

Mail Date: 04/21/2010

Applicant	: James Langham Dale	: DECISION ON REQUEST FOR
Patent Number	: 7598366	: RECALCULATION of PATENT
Issue Date	: 10/06/2009	: TERM ADJUSTMENT IN VIEW
Appliction No	: 10/521,571	: OF WYETH AND NOTICE OF INTENT TO
Filed	: 05/16/2005	: ISSUE CERTIFICATE OF CORRECTION
		:

The Request for Recalculation is **GRANTED** to the extent indicated.

The patent term adjustment has been determined to be **628** days. The USPTO will *sua sponte* issue a certificate of correction reflecting the amount of PTA days determined by the recalculation.

Prior to the issuance of the certificate of correction, the USPTO will afford patentee an opportunity to be heard and request reconsideration. Accordingly, patentee has **one month or thirty (30) days**, whichever is longer, to file a request for reconsideration of this patent term adjustment calculation. See 35 U.S.C. 154(b)(3)(B)(ii) and 37 CFR 1.322(a)(4). No extensions of time will be granted under 37 CFR 1.136.

Patentee should use document code PET.OP if electronically filing a request for reconsideration of this patent term adjustment calculation. The patentee must also include the information required by 37 CFR 1.705(b)(2) and the fee required by 37 CFR 1.18(e). If patentee does not file a timely request for reconsideration of this patent term adjustment calculation including the information required by 37 CFR 1.705(b)(2) and the fee required by 37 CFR 1.18(e), the USPTO will issue a certificate of correction reflecting the PTA determination noted above.

Patentee should be aware that in order to preserve the right to review in the United States District Court for the District of Columbia of the USPTO patent term adjustment determination, patentee must ensure that he or she also take the steps required under 35 U.S.C. 154(b)(4)(A) in a timely manner. Nothing in the request for recalculation should be construed as providing an alternative time frame for commencing a civil action under 35 U.S.C. 154(b)(4)(A).

Any questions concerning this decision should be directed to the Office of Patent Legal Administration at 571-272-7702.

UNITED STATES PATENT AND TRADEMARK OFFICE

UNITED STATES DEPARTMENT OF COMMERCE
United States Patent and Trademark Office
Address: COMMISSIONER FOR PATENTS
P.O. Box 1450
Alexandria, Virginia 22313-1450
www.uspto.gov

PROSKAUER ROSE LLP
One International Place
Boston, MA 02110

Mail Date: 05/18/2010

Applicant : James Langham Dale
Patent Number : 7598366
Issue Date : 10/06/2009
Application No : 10/521,571
Filed : 05/16/2005

: NOTICE CONCERNING IMPROPER
: CALCULATION OF PATENT TERM
: ADJUSTMENT BASED UPON USPTO
: IMPROPERLY MEASURING REDUCTION
: PERIOD UNDER 37 CFR 1.704(c)(10).

The United States Patent and Trademark Office (USPTO) discovered that in processing the recent recalculation decisions mailed in response to patentee's filed Request for Recalculation of Patent Term Adjustment in view of Wyeth, the USPTO improperly measured the reduction period for reductions under 37 CFR 1.704(c)(10). Pursuant to 37 CFR 1.704(c)(10), patentee's reduction begins on the date of filing the amendment under 37 CFR 1.312 ("1.312 amendment") or other related paper and ends on the date that the Office mails a response to the filing of the 1.312 amendment or other paper. It has been discovered that during the recalculation, the calculation failed to the limit the reduction to the mail date of the response to the 1.312 amendment or other paper. Accordingly, patentee's reductions were greater than warranted.

This notice **VACATES** the previous GRANTED request for recalculation and provides patentee with a revised GRANTED recalculation.

The patent term adjustment has been determined to be **712** days. The USPTO will *sua sponte* issue a certificate of correction reflecting the amount of patent term adjustment (PTA) days determined by the recalculation.

Prior to the issuance of the certificate of correction, the USPTO will afford patentee an opportunity to be heard and request reconsideration. Accordingly, patentee has **one month or thirty (30) days** from the mail date of this notice, whichever is longer, to file a request for reconsideration of this PTA calculation. See 35 U.S.C. § 154(b)(3)(B)(ii) and 37 CFR 1.322(a)(4).

Patentee should use document code PET.OP if electronically filing a request for reconsideration of this PTA calculation. The patentee must also include the information required by 37 CFR 1.705(b)(2), and the fee required by 37 CFR 1.18(e). If patentee does not file a timely request for reconsideration of this PTA calculation, including the information required by 37 CFR 1.705(b)(2) and the fee required by 37 CFR 1.18(e), the USPTO will issue a certificate of correction reflecting the PTA determination noted above.

Patentee should be aware that in order to preserve the right of review of the USPTO's PTA determination in the United States District Court for the District of Columbia, patentee must ensure that the steps required under 35 U.S.C. § 154 (b)(4) are taken in a timely manner. Nothing in the request for recalculation should be construed as providing an alternative time frame for commencing a civil action under 35 U.S.C. § 154(b)(4).

17 AUG 2005

#6

UNITED STATES PATENT AND TRADEMARK OFFICE

COMMISSIONER FOR PATENTS
UNITED STATES PATENT AND TRADEMARK OFFICE
P.O. BOX 1450
ALEXANDRIA, VA 22313-1450
www.uspto.gov

William P. Berridge
OLIFF & BERRIDGE, PLC
P.O. Box 19928
Alexandria, Virginia 22320

In re Application of	:	
Maciej KORECKI	:	
Application No.: 10/521,578	:	DECISION ON
PCT No.: PCT/PL03/00064	:	PETITION
Int. Filing Date: 02 July 2003	:	UNDER 37 CFR 1.137(b)
Priority Date: 05 July 2002	:	
Attorney Docket No.: 122401	:	
For: TEMPERATURE CONTROL SYSTEM	:	

The petition to revive under 37 CFR 1.137(b) filed 18 January 2005 in the above-captioned application is hereby **GRANTED** as follows:

On 02 July 2003, applicant filed international application PCT/PL03/00064, which claimed priority of an earlier Polish application filed 05 July 2002. The application became abandoned as to the national stage in the United States because the basic national fee was not paid to the USPTO prior to the 30 months statutory time period, which expired at midnight on Monday 06 January 2005.

On 18 January 2005, applicant filed the present petition, requesting revival of the international application under the provisions of 37 CFR 1.137(b) along with the appropriate petition fee as required by 37 CFR 1.17(m).

A review of the application papers filed 18 January 2005 reveals that all of the requirements of 37 CFR 1.137(b) for revival have been submitted. Applicant's statement that "the entire delay in filing this U.S. National Stage Application from its due date until the filing of a grantable petition under 37 CFR 1.137(b) was unintentional" meets the requirements under 37 CFR 1.137(b)(3) at the time of filing this petition.

The request to revive the application abandoned under 35 U.S.C. 371(d) is granted as to the National stage in the United States of America.

The application is being forwarded to the United States Designated/Elected Office for further processing, including the issuance of a Notification of Missing Requirements (Form

PCT/DO/EO/905) to inform applicant that a declaration in compliance with 37 CFR 1.497 along with the surcharge of $130.00 for submitting the oath/declaration after 30 months from the priority date must be filed in order to avoid abandonment of the application as to the national stage in the United States.

Richard Cole
PCT Legal Examiner
PCT Legal Office

Nguyên Ngoc-Hô
Paralegal Specialist
PCT Legal Office

NNH/RC:hn

Tel: (571) 272-3290

SPE RESPONSE FOR CERTIFICATE OF CORRECTION

Paper No.: _____

DATE : 12/16/08

TO SPE OF : ART UNIT 2419

SUBJECT : Request for Certificate of Correction for Appl. No.: 10/521581 Patent No.: 7333435 B2

Please respond to this request for a certificate of correction within 7 days.

FOR IFW FILES:

Please review the requested changes/corrections as shown in the **COCIN** document(s) in the IFW application image. No new matter should be introduced, nor should the scope or meaning of the claims be changed.

Please complete the response (see below) and forward the completed response to scanning using document code **COCX**.

FOR PAPER FILES:

Please review the requested changes/corrections as shown in the attached certificate of correction. Please complete this form (see below) and forward it with the file to:

Certificates of Correction Branch (CofC)
South Tower - 9A22
Palm Location 7580

Virginia Tolbert
Certificates of Correction Branch
703-308-9390 ext. 113

Thank You For Your Assistance

The request for issuing the above-identified correction(s) is hereby:
Note your decision on the appropriate box.

- ☑ **Approved** — All changes apply.
- ☐ **Approved in Part** — Specify below which changes **do not** apply.
- ☐ **Denied** — State the reasons for denial below.

Comments: _____

SPE

2419
Art Unit

PTO/SB/44 (09-07)
Approved for use through 08/31/2010. OMB 0651-0033
U.S. Patent and Trademark Office; U.S. DEPARTMENT OF COMMERCE
Under the Paperwork Reduction Act of 1995, no persons are required to respond to a collection of information unless it displays a valid OMB control number.
(Also Form PTO-1050)

UNITED STATES PATENT AND TRADEMARK OFFICE
CERTIFICATE OF CORRECTION

PATENT NO. : 7,333,435 B2

APPLICATION NO.: 10/521,581

ISSUE DATE : February 19, 2008

INVENTOR(S) : Anthony Gerkis

It is certified that an error appears or errors appear in the above-identified patent and that said Letters Patent is hereby corrected as shown below:

Column 13, Lines 55 and 56 "said determined transmission capacity of said channel; and" should read –said determined transmission capacity of said link; and–

MAILING ADDRESS OF SENDER (Please do not use customer number below):

Patent Administrator, Katten Muchin Rosenman LLC, 2900 K Street NW, Suite 200, Washington, D.C. 20007

This collection of information is required by 37 CFR 1.322, 1.323, and 1.324. The information is required to obtain or retain a benefit by the public which is to file (and by the USPTO to process) an application. Confidentiality is governed by 35 U.S.C. 122 and 37 CFR 1.14. This collection is estimated to take 1.0 hour to complete, including gathering, preparing, and submitting the completed application form to the USPTO. Time will vary depending upon the individual case. Any comments on the amount of time you require to complete this form and/or suggestions for reducing this burden, should be sent to the Chief Information Officer, U.S. Patent and Trademark Office, U.S. Department of Commerce, P.O. Box 1450, Alexandria, VA 22313-1450. DO NOT SEND FEES OR COMPLETED FORMS TO THIS ADDRESS. **SEND TO: Attention Certificate of Corrections Branch, Commissioner for Patents, P.O. Box 1450, Alexandria, VA 22313-1450.**

If you need assistance in completing the form, call 1-800-PTO-9199 and select option 2.

logical channel basis. Further, less conventional attributes, such as higher error correcting coding levels or even radio transmission power level margins can also be defined and implemented on a per logical channel basis. Also, other attributes such as whether and which types of header compression to apply to a flow can be defined per flow.

Further, traffic shapers can be implemented and configured on a per logical channel basis. This allows, for example, voice telephony data to be transferred over link **40** as necessary, while other data types can be data rate limited according to parameters defined by the network operator. Thus, a telephony call can be conducted unimpeded while a file transfer or other large data transfer can be subject to a leaky bucket, or other traffic shaping process.

As should now be apparent to those of skill in the art, the unique flexibility described above is achieved with a very low overhead impact on the transmission link capacity. Transmission of segments involves only the addition of a small header to each segment, the header identifying the sending logical channel and, in the case were segmentation of the packet has occurred, an indication of the segmentation of the packet and the location of the segment within the full packet.

The present invention provides for the efficient utilization of a shared resource, such as a radio link, in a network including heterogeneous links. Data is arranged in flows and each flow can be provided with its own logical channel with its own set of QoS attributes. These attributes can include prioritization, latency restrictions, data rate requirements, reliability requirements, etc.

The above-described embodiments of the invention are intended to be examples of the present invention and alterations and modifications may be effected thereto, by those of skill in the art, without departing from the scope of the invention which is defined solely by the claims appended hereto.

I claim:

1. A method of transmitting at least two data flows over a telecommunications link, wherein each data flow can have a different set of quality of service attributes defined for it, comprising the steps of:

(i) receiving a packet for transmission over said link;

(ii) examining said packet to determine an appropriate set of quality of service attributes required for it;

(iii) placing said examined packet into one of a plurality of logical channel queues, said one logical channel queue having defined therefor quality of service attributes corresponding to the determined quality of service attributes required for said packet;

(iv) determining a data transmission capacity for said link and selecting one of said plurality of logical channel queues which holds data to be transmitted with the highest priority for transmission and packaging and transmitting as much data from said logical channel queue as can be packaged to fit within said determined transmission capacity of said channel; and

(v) repeating steps (i) through (iii) and step (iv) as necessary.

2. The method of claim **1** wherein:

said telecommunications link is structured into two or more channels and each of said two or more channels can have different amounts of data transmission capacity; and

each of said plurality of logical channel queues can be assigned to one or more of said two or more channels and in step (iv), the determined data transmission capacity is determined for each channel and, for each channel, one of the assigned logical channel queues is selected for transmission.

3. The method of claim **2** wherein said two or more channels can comprise any of a dedicated channel between a pair of endpoints and a broadcast channel between an endpoint and a plurality of other endpoints.

4. The method of claim **3** wherein said dedicated channel transports data between a radio base station and a subscriber station and wherein said broadcast channel transports data between said radio base station and a plurality of subscriber stations.

5. The method of claim **4** wherein a set of logical channel queues is defined for each of said plurality of subscriber stations.

6. The method of claim **3** wherein a logical channel queue can be associated with a dedicated channel and at least one broadcast channel.

7. The method of claim **2** wherein the transmission capacity of each of said at least two channels is adjusted as needed to meet to service the logical channel queues assigned to it.

8. The method of claim **1** wherein the quality of service attributes include whether or not ARQ is to be performed for the data flow.

9. The method of claim **1** wherein the quality of service attributes include whether or not header compression is to be performed for the data flow.

10. The method of claim **1** wherein the quality of service attributes include whether or not a traffic shaping protocol is to be applied to said data flow.

11. The method of claim **1** wherein the contents of each logical channel queue are arranged according to a defined priority the current highest priority packet is selected for transmission only after transmission of the previous highest priority packet is completed.

12. The method of claim **11** wherein the contents of a different logical channel queue can be preemptively selected for transmission next before completion of transmission of a packet from another logical channel queue.

13. The method of claim **1** further comprising the step of creating a logical channel queue with a required set of quality of service attributes if, after step (ii), no logical channel queue is available with corresponding quality of service attributes and, in step (iii), placing said packet into said created logical channel queue.

14. A system for the transmission of data flows from a first endpoint to one or more of a plurality of other endpoints through a link where each flow can have different quality of service attributes defined therefor, comprising:

a network interface at said first endpoint to receive packets from said data flows for transmission through said link to said other endpoints;

a set of logical channel queues, each of said logical channel queues in said set being operable to queue a received packet and having a set of defined quality of service attributes defined for the contents of the queue;

a packet classifier to examine said received packets to determine the quality of service attributes for said packet and to place received packets into selected ones of said logical channel queues with corresponding quality of service attributes; and

a link controller which determines the available data transmission capacity to said plurality of end points and which selects for transmission a portion of a packet from the logical channel queue whose contents have the highest priority, the link controller segmenting the packet as necessary to have the portion fit within the data transmission capacity of said link.

UNITED STATES PATENT AND TRADEMARK OFFICE

Commissioner for Patents
United States Patent and Trademark Office
P.O. Box 1450
Alexandria, VA 22313-1450
www.uspto.gov

Morrison & Foerster LLP
1650 Tysons Boulevard
Suite 400
Mclean, VA 22102

COPY MAILED

SEP 26 2007

OFFICE OF PETITIONS

In re Application of	:	
Jochen Eisl et al.	:	
Application No. 10/521,583	:	DECISION ON PETITION
Filed: January 18, 2005	:	TO WITHDRAW
Attorney Docket No. 449122078400	:	FROM RECORD
	:	

This is a decision on the Request to Withdraw as attorney or agent of record under 37 C.F.R. § 1.36(b), filed May 25, 2007.

The request is **NOT APPROVED** as moot.

A review of the file record indicates that the power of attorney to Morrison & Foerster LLP has been revoked by the assignee of the patent application on August 3, 2007. Accordingly, the request to withdraw under 37 C.F.R. § 1.36(b) is moot.

All future communications from the Office will continue to be directed to the below-listed address until otherwise notified by applicant.

Telephone inquires concerning this decision should be directed to Terri Williams at 571-272-2991.

T. Williams

Terri Williams
Petitions Examiner
Office of Petitions

cc: **Bell, Boyd & Lloyd, LLP**
P.O. Box 1135
Chicago, IL 60690

07 SEP 2005

#3

UNITED STATES PATENT AND TRADEMARK OFFICE

Commissioner for Patents
United States Patent and Trademark Office
P.O. Box 1450
Alexandria, VA 22313-1450
www.uspto.gov

ANTEVISTA GMBH
Harburger Schlossstrasse 6-12
21079 Hamburg
Germany

In re Application of :
THEIS, Jean-Paul :
U.S. Application No.: 10/521,585 :
PCT No.: PCT/EP03/00099 :
Int. Filing Date: 8 January 2003 :
Priority Date: 24 June 2002 :
Attorney Docket No.: None :
For: A METHOD FOR EXECUTING :
STRUCTURED SYMBOLIC MACHINE :
CODE ON A MICROPROCESSOR :

DECISION ON PETITION FOR REVIVAL UNDER 37 CFR 1.137(b)

This decision is in response to applicant's petition to revive under 37 CFR 1.137(b) filed on 18 January 2005 which is hereby **GRANTED** as follows:

Applicant submitted a credit card payment form for the USPTO to charge $1,270 in fees. This payment is sufficient to revive the above-captioned application and commence national stage procedures. However, applicant is short $35.00[1] due to a change in the USPTO fee schedule on 08 December 2004. All other requirements of 37 CFR 1.137(b) are satisfied.

A signed declaration in compliance with 37 CFR 1.497(a) and (b) has been provided. This application is being forwarded to the United States Designated/Elected Office for further processing including mailing a Notification of Missing Requirements Under 35 U.S.C. 371 in the United States Designated/Elected Office (DO/EO/US) (Form PCT/DO/EO/905) indicating that additional fees totaling $35.00 are required for the National Stage Examination fee.

James Thomson

James Thomson
Attorney Advisor
Office of PCT Legal Administration

Tel.: (571) 272-3302

---

[1] Applicant submitted $ 500.00 in national stage fees ($150.00 for the basic national stage fee; $250.00 for the national stage search fee and $100.00 for national examination fee); $65.00 for the surcharge fee, $40.00 for the assignment fee and $665.00 for the petition to revive fee totaling $1,270.00. The correct fees are $450.00 in national stage fees ($150.00 for the basic national stage fee; **$200.00** for the national stage search fee and $100.00 for national examination fee); $65.00 for the surcharge fee, $40.00 for the assignment fee and **$750.00** for the petition to revive fee totaling $1,305.00. Thus, the $100.00 national examination fee has not been paid. The additional payment of $65.00 has been placed in a holding code awaiting further payment of $35.00.

UNITED STATES PATENT AND TRADEMARK OFFICE

Commissioner for Patents
United States Patent and Trademark Office
P.O. Box 1450
Alexandria, VA 22313-1450
www.uspto.gov

ALBIHNS STOCKHOLM AB
Linnegatan 2
BOX 5581
SE-114 85 Stockholm SWEDEN

COPY MAILED

SEP 12 2006

OFFICE OF PETITIONS

In re Application of	:	
ROOS, et al.	:	
Application No. 10/521,586	:	DECISION ON PETITION
Filed: September 26, 2005	:	TO WITHDRAW
Attorney Docket No. 67157-78277	:	FROM RECORD
	:	

This is a decision on the Request to Withdraw as attorney or agent of record under 37 C.F.R. § 1.36(b), filed June 29, 2006.

The request is **NOT APPROVED**.

A grantable request to withdraw as attorney/agent of record must be signed by every attorney/agent seeking to withdraw or contain a clear indication that one attorney is signing on behalf of another/others. A request to withdraw will not be approved unless at least 30 (thirty) days would remain between the date of approval and the later of the expiration date of a time to file a response or the expiration date of the maximum time period which can be extended under 37 C.F.R. § 1.136(a).

The Office cannot approve the request at this time since the reasons provided do not meet any of the conditions under the mandatory or permissive categories enumerated in 37 CFR 10.40. Section 10.40 of Title 37 of the Code of Federal Regulation states, "[a] practitioner shall not withdraw from employment in a proceeding before the Office without permission from the Office[.]" More specifically, 37 CFR 10.40 states, "[i]f paragraph (b) of this section is not applicable, a practitioner may not request permission to withdraw in matter pending before the Office unless such request or such withdrawal is" for one the permissive reasons listed in 37 CFR 10.40(c). The reasons set forth in the request, "Leaving the employ of Customer No. 26288", do not meet any of the conditions set forth in 37 CFR 10.40.

All future communications from the Office will continue to be directed to the above-listed address until otherwise notified by applicant.

Telephone inquiries concerning this decision should be directed to Patricia Volpe at 571-272-6825.

David Bucci
Petitions Examiner
Office of Petitions

UNITED STATES PATENT AND TRADEMARK OFFICE

Commissioner for Patents
United States Patent and Trademark Office
P.O. Box 1450
Alexandria, VA 22313-1450
www.uspto.gov

ALBIHNS STOCKHOLM AB
BOX 5581, LINNEGATAN 2
SE-114 85 STOCKHOLM; SWEDEN
STOCKHOLM SE SWEDEN

COPY MAILED

FEB 16 2007

OFFICE OF PETITIONS

In re Application of
ROOS, et al.
Application No. 10/521,586
Filed: September 26, 2005
Attorney Docket No. 67157-78277

DECISION ON REQUEST FOR REVOCATION OF POWER OF ATTORNEY

This is a decision on the Request to Revoke the attorney or agent of record under 37 C.F.R. § 1.36(a), filed October 10, 2006.

The request is **APPROVED**.

A power of attorney, pursuant to § 1.32(b), may be revoked at any stage in the proceeding of a case by an applicant for patent (§ 1.41(b)) or an assignee of the entire interest of the applicant under § 3.71(b). Fewer than all of the applicants (or by fewer than the assignee of the entire interest of the applicant) may only revoke the power of attorney upon a showing of sufficient cause, and payment of the petition fee set forth § 1.17(h). For the assignee to take action a proper statement under § 3.73(b) is required.

The correspondence address of record has been changed and the new correspondence address is the address indicated below.

Telephone inquiries concerning this decision should be directed to the undersigned at (571) 272-7253.

Monica A. Graves
Petitions Examiner
Office of Petitions

cc: **YOUNG AND THOMPSON**
745 S 23RD STREET 2ND FLOOR
ARLINGTON, VA 22202

UNITED STATES PATENT AND TRADEMARK OFFICE

Commissioner for Patents
United States Patent and Trademark Office
P.O. Box 1450
Alexandria, VA 22313-1450
www.uspto.gov

ALBIHNS STOCKHOLM AB
BOX 5581, LINNEGATAN 2
SE-114 85 STOCKHOLM
STOCKHOLM SWEDEN

COPY MAILED

APR 05 2007

OFFICE OF PETITIONS

In re Application of	:	
Joachim ROOS et al	:	
Application No. 10/521,586	:	DECISION ON PETITION
Filed: September 26, 2005	:	TO WITHDRAW
Attorney Docket No. 67157-78277	:	FROM RECORD

This is a decision on the request to withdraw as attorney or agent of record under 37 C.F.R. § 1.36(b), filed March 26, 2007.

The request is **NOT APPROVED** as moot.

A review of the file record indicates that the power of attorney to the attorneys associated with Customer Number 26288 has been revoked by the applicants of the patent application on October 10, 2006. Accordingly, the request to withdraw under 37 C.F.R. § 1.36(b) is moot.

It is further noted that, although the decision mailed February 16, 2007, approved the revocation and power of attorney filed on October 10, 2006, Office records were not changed to reflect this change. Office records have now been updated to reflect the revocation of the power of attorney to the attorneys associated with Customer Number 26288 and the power of attorney to the attorneys associated with Customer Number 00466. Notices of the change in power of attorney will be mailed under separate cover.

All future communications from the Office will continue to be directed to the below-listed address until otherwise notified by applicant.

Telephone inquires concerning this decision should be directed to the undersigned at 571-272-3218.

Frances Hicks
Petitions Examiner
Office of Petitions

cc:

Young & Thompson
Suite 200
745 South 23rd Street
Arlington, VA 22202

2 4 MAR 2008

UNITED STATES PATENT AND TRADEMARK OFFICE

Commissioner for Patents
United States Patent and Trademark Office
P.O. Box 1450
Alexandria, VA 22313-1450
www.uspto.gov

OLIFF & BERRIDGE, PLC
P.O. BOX 320850
ALEXANDRIA VA 22320-4850

In re Application of	:	
TOYODA, Mitsunori et al.	:: :	
U.S. Application No.: 10/521,590	:	
PCT No.: PCT/JP2003/007692	:	
Int'l Filing Date: 17 June 2003	:	DECISION
Priority Date: 18 July 2002	:	
Attorney's Docket No.: 132691	:	
For: ILLUMINATION OPTICAL DEVICE,	:	
PHOTOLITHOGRAPHY MACHINE,	:	
AND EXPOSURE METHOD		

Applicants filed this request for a corrected filing receipt on 14 August 2006.

Applicants request that the filing date under 35 USC 371(c) be changed to 28 January 2005, from 18 January 2005, as listed.

A review of the file indicates that all requirements under 35 USC 371(c) were received on 18 January 2005, as indicated in the receipt. As applicants did not file an express request to begin examination procedures under 35 USC 371(f), the date for complete of all 35 USC 371 requirements is 28 January 2005.

For the reasons discussed above, applicants' request for a corrected filing receipt is **DISMISSED** without prejudice.

Any further correspondence with respect to this matter may be filed via EFS-Web or if mailed, should be addressed to the Mail Stop PCT, Commissioner for Patents, Office of PCT Legal Administration, P.O. Box 1450, Alexandria, Virginia 22313-1450, with the contents of the letter marked to the attention of the Office of PCT Legal Administration.

/Erin P. Thomson/

Erin P. Thomson
Attorney Advisor
PCT Legal Administration

Telephone: 571-272-3292
Facsimile: 571-273-0459

UNITED STATES PATENT AND TRADEMARK OFFICE

Commissioner for Patents
United States Patent and Trademark Office
P.O. Box 1450
Alexandria, VA 22313-1450
www.uspto.gov

0 1 APR 2008

EITAN, PEARL, LATZER & COHEN ZEDEK
10 Rockefeller Plaza
Suite 1001
New York, NY 10020

In re Application of COTER, Florin U.S. Application No.: 10/521,595 PCT No.: PCT/IL2003/000584 Int. Filing Date: 15 July 2003 Priority Date: 16 July 2002 Attorney Docket No.: P-7626-US For: SYSTEM AND METHOD FOR DETERMINING PROPERTIES OF TUBULAR CAVITY	:	**DECISION**

This is a decision on the "Petition to Withdraw Holding of Abandonment Under 37 CFR 1.181(a), . . ." filed on 10 August 2006.

BACKGROUND

On 09 August 2005, the United States Designated/Elected Office (DO/EO/US) mailed a Notification of Missing Requirements Under 35 U.S.C. 371 (Form PCT/DO/EO/905) indicating that a declaration in compliance with 37 CFR 1.497(a) and (b) and a surcharge fee must be provided. A two-month time period for response was set with extensions of time available.

On 06 October 2005, applicant purportedly filed a "Response to Notice to File Missing Parts" which contained an executed declaration and authorization to charge any required fee to Deposit Account No. 50-3355.

On 18 July 2006, the DO/EO/US mailed a Notification of Abandonment (Form PCT/DO/EO/909) stating that the above-captioned application was abandoned for failure to respond to the Form PCT/DO/EO/905 within the time period set.

On 10 August 2006, applicant filed the instant petition which was accompanied by, *inter alia*, copies of documents purportedly filed 06 October 2005 and a stamped postcard receipt for the 06 October 2005 documents.

On 26 December 2006, a status inquiry was filed.

DISCUSSION

Applicant claims that a declaration was filed in the subject application on 06

October 2005. These papers are not located in the subject application.

A review of the papers submitted in the petition show that the U.S. application number is listed as 10/521,585 on all of the papers purportedly filed 06 October 2005. A check of U.S. application number 10/521,585 show that the papers were placed there as requested. Hence, the subject petition is treated as a petition under 37 CFR 1.182 to correct the application number and move the papers to the proper application. The $400.00 petition fee has been charged to Deposit Account No. 50-3355 as authorized.

The papers found in U.S. Application No. 10/521,585 and filed 06 October 2005 clearly show that they were intended for the above-captioned application. The docket number, title and name of applicant correspond to the above-captioned application. Moreover, the declaration references international application PCT/IL2003/000584. The subject application is the national stage of PCT/IL2003/000584.

Accordingly, the declaration filed 06 October 2005 has been moved into the above-captioned application.

DECISION

Applicant's petition under 37 CFR 1.182 is **GRANTED**.

The Form PCT/DO/EO/909 mailed 18 July 2006 is **VACATED**.

A review of the declaration filed 06 October 2005 shows that it is in compliance with 37 CFR 1.497(a) and (b). The $65.00 surcharge fee has been charged to Deposit Account No. 50-3355 as authorized. It is also noted that an assignment was erroneously filed in U.S. application number 10/521,585. Applicant must resubmit the assignment in the subject application.

Applicant has completed the requirements for acceptance under 35 U.S.C. § 371(c). The application has an international filing date of 15 July 2003, under 35 U.S.C. 363, and a 35 U.S.C. 371 date of 06 October 2005.

This application is being forwarded to the Office of Patent Application Processing for continued processing.

James Thomson

James Thomson
Attorney Advisor
Office of PCT Legal Administration

Tel.: (571) 272-3302

UNITED STATES PATENT AND TRADEMARK OFFICE

23 AUG 2007

COMMISSIONER FOR PATENTS
UNITED STATES PATENT AND TRADEMARK OFFICE
P.O. BOX 1450
ALEXANDRIA, VA 22313-1450
www.uspto.gov

BARNES & THORNBURG LLP
P.O. BOX 2786
CHICAGO IL 60690-2786

In re Application of: BUNN, Arthur, H.
U.S. Application No.: 10/521,613
PCT No.: PCT/US2003/022338
International Filing Date: 16 July 2003
Priority Date: 16 July 2002
Atty Docket No.: 27726-98311
For: TEMPERATURE CONTROL SYSTEM

DECISION ON PETITION

The petition for revival under 37 CFR 1.137(b) filed 06 August 2007 in the above-captioned application is hereby **GRANTED** as follows:

Applicant's statement that "the entire delay in filing the required reply from the due date for the required reply until the filing of a grantable petition under 37 CFR 1.137(b) was unintentional" satisfies the requirements of 37 CFR 1.137(b)(3).

Applicant has submitted the petition fee and the required reply, that is, a proper response to the Notification of Missing Requirements (Form PCT/DO/EO/905) mailed 01 July 2005 in the form of an executed declaration in compliance with 37 CFR 1.497 and the surcharge for filing the declaration later than thirty months after the priority date.[1] The requirements of 37 CFR 1.137(b) have been satisfied. Therefore, the request to revive the application is granted as to the national stage in the United States of America.

This application is being referred to the National Stage Processing Division of the Office of PCT Operations for further processing in accordance with this decision. The date under 35 U.S.C. 371(c)(1), (c)(2), and (c)(4) is 06 August 2007.

Richard M. Ross
Attorney Advisor
Office of PCT Legal Administration
Telephone: (571) 272-3296
Facsimile: (571) 273-0459

[1] Applicant's petition was accompanied by a five-month extension fee. However, an extension of time under 37 CFR 1.136(a) must be filed prior to the expiration of the maximum extendable period for reply. See In re Application of S, 8 USPQ2d 1630, 1631 (Comm'r Pats 1988). Since the extension fee submitted with the present petition was filed well after the maximum extendable period for reply to the Notification Of Missing Requirements, this fee is unnecessary and will be credited to petitioner's deposit account.

UNITED STATES PATENT AND TRADEMARK OFFICE

UNITED STATES DEPARTMENT OF COMMERCE
United States Patent and Trademark Office
Address: COMMISSIONER FOR PATENTS
P.O. Box 1450
Alexandria, Virginia 22313-1450
www.uspto.gov

U.S. APPLICATION NUMBER NO.	FIRST NAMED APPLICANT	ATTY. DOCKET NO.
10/521,613	Arthur H Bunn	27726-94515 NP

INTERNATIONAL APPLICATION NO.	
PCT/US03/22338	
I.A. FILING DATE	PRIORITY DATE
07/16/2003	07/16/2002

23644
BARNES & THORNBURG
P.O. BOX 2786
CHICAGO, IL 60690-2786

CONFIRMATION NO. 4042

371 FORMALITIES LETTER

OC000000016413442

Date Mailed: 07/01/2005

NOTIFICATION OF MISSING REQUIREMENTS UNDER 35 U.S.C. 371 IN THE UNITED STATES DESIGNATED/ELECTED OFFICE (DO/EO/US)

The following items have been submitted by the applicant or the IB to the United States Patent and Trademark Office as a Designated / Elected Office (37 CFR 1.495).

- Copy of the International Application filed on 01/14/2005
- Preliminary Amendments filed on 01/14/2005
- Information Disclosure Statements filed on 01/14/2005
- U.S. Basic National Fees filed on 01/14/2005
- Assignment filed on 01/14/2005
- Priority Documents filed on 01/14/2005
- Power of Attorney filed on 01/14/2005

The following items **MUST** be furnished within the period set forth below in order to complete the requirements for acceptance under 35 U.S.C. 371:

- Oath or declaration of the inventors, in compliance with 37 CFR 1.497(a) and (b), identifying the application by the International application number and international filing date.

- **$130** Surcharge for providing the oath or declaration later than 30 months from the priority date (37 CFR 1.492(e)) is required.

SUMMARY OF FEES DUE:

Total additional fees required for this application is **$130** for a Large Entity:

- **$130** Late oath or declaration Surcharge.

ALL OF THE ITEMS SET FORTH ABOVE MUST BE SUBMITTED WITHIN TWO (2) MONTHS FROM THE DATE OF THIS NOTICE OR BY 32 MONTHS FROM THE PRIORITY DATE FOR THE APPLICATION, WHICHEVER IS LATER. FAILURE TO PROPERLY RESPOND WILL RESULT IN ABANDONMENT.

The time period set above may be extended by filing a petition and fee for extension of time under the provisions of 37 CFR 1.136(a).

Applicant is reminded that any communications to the United States Patent and Trademark Office must be mailed to the address given in the heading and include the U.S. application no. shown above (37 CFR 1.5)

*A copy of this notice **MUST** be returned with the response.*

SHELBY J VIGIL

Telephone: (703) 308-9140 EXT 224

PART 2 - OFFICE COPY

U.S. APPLICATION NUMBER NO.	INTERNATIONAL APPLICATION NO.	ATTY. DOCKET NO.
10/521,613	PCT/US03/22338	27726-94515 NP

FORM PCT/DO/EO/905 (371 Formalities Notice)

UNITED STATES PATENT AND TRADEMARK OFFICE

Commissioner for Patents
United States Patent and Trademark Office
P.O. Box 1450
Alexandria, VA 22313-1450
www.uspto.gov

GE ENERGY GENERAL ELECTRIC
C/O ERNEST G. CUSICK
ONE RIVER ROAD, BLD. 43, ROOM 225
SCHENECTADY NY 12345

COPY MAILED
AUG 15 2008

In re Application of
Rogall,et al.
Application No.: 10/521,615
Filed: February 9, 2006
Attorney Docket No.: 129494-4

ON PETITION

This is in response to the petition under 37 CFR 1.47(b), filed June 16, 2008. The petition will be treated as a petition under CFR 1.183, requesting waiver of 37 CFR 1.67, which requires all of the joint inventors to execute a supplemental declaration.[1]

The petition under 37 CFR 1.183 to waive 37 CFR 1.67 is **DISMISSED**.

The petition under 37 CFR 1.47(a) is **DISMISSED AS MOOT**.

Any request for reconsideration of this decision must be submitted within TWO (2) MONTHS from the mail date of this decision. Extensions of time under 37 CFR 1.136(a) are permitted. Any response should be entitled "Request for Reconsideration of Petition Under 37 CFR 1.183 to waive 37 CFR 1.67" and may include an oath or declaration executed by the inventor. **Failure to respond will result in abandonment of the application.**

While this waiver petition is not a petition under 37 CFR 1.47, it is evaluated in much the same way a Rule 47 petition is. Therefore, a grantable petition requires:

A grantable petition under 37 CFR 1.47(b) requires:

(1) proof that the non-signing inventor cannot be reached or refuses to sign the oath or declaration;
(2) an acceptable oath or declaration;
(3) the petition fee;

[1] Once an application has received a fully executed oath or declaration and been placed on the files for examination, the provisions of 37 CFR 1.47 no longer apply. Rather, the remedy for treating an inventor's refusal or unavailability to sign a supplemental oath or declaration is waiver of 37 CFR 1.67. See MPEP 603.

(4) a statement of the last known address of the non-signing inventor;
(5) proof of proprietary interest; and
(6) proof of irreparable damage.

This petition lacks items (2), and (5) set forth above.

As to item (2), an oath or declaration for the patent application in compliance with 37 CFR 1.63 and 1.64 has not been presented. The declaration has not been signed by a properly empowered representative of the party in interest. **No one** has signed the declaration. An oath or declaration in compliance with 37 CFR 1.63 and 1.64 listing the inventors' information, signed by a properly empowered representative of the party in interest on behalf of the non-signing inventors is REQUIRED. See MPEP 409.03(b).

MPEP 409.03(b) states that typically when a corporation is the party in interest, an officer should sign the declaration and provide his/her title. Where an oath is signed by a registered attorney on behalf of a corporation, either proof of the attorney's authority in the form of a statement signed by an appropriate corporate officer must be submitted, or the attorney may simply state that he is authorized to sign on behalf of the corporation. The person executing the declaration must state his/her relationship to the inventors as required by 37 CFR 1.64.

As to item (5), petitioner has failed to show or provide proof that General Electric Company has sufficient proprietary interest in the subject matter to justify the filing of the application (see MPEP 409.03(f)). Per MPEP 409.03(f): If the application has been assigned, a copy of the assignment (in the English language) must be submitted. It is noted that the assignment referenced in the petition, recorded at Reel 017543, Frame 0458, is **not** an assignment between General Electric Company (or its predecessor in interest) and the two joint inventors.

Acceptable proof of proprietary interest would include a copy of the employment agreement between the non-signing inventors and the party in interest, a copy of an assignment agreement showing that the invention disclosed in the application is assigned to the party in interest, or a legal memorandum signed by an attorney familiar with the law of the jurisdiction stating that a court of competent jurisdiction would by the weight of authority in that jurisdiction award the title of the invention to the party in interest.

The $400.00 Rule 183 petition will be charged to deposit account no. 07-0849.

Further correspondence with respect to this matter should be addressed as follows:

By mail: Mail Stop PETITION
Commissioner for Patents
Post Office Box 1450
Alexandria, VA 22313-1450

By hand: U.S. Patent and Trademark Office
Customer Service Window, Mail Stop Petition
Randolph Building
401 Dulany Street
Alexandria, VA 22314

By FAX: (571) 273-8300 - ATTN: Office of Petitions

Telephone inquiries should be directed to the undersigned at (571) 272-3230.

Shirene Willis Brantley

Shirene Willis Brantley
Senior Petitions Attorney
Office of Petitions

UNITED STATES PATENT AND TRADEMARK OFFICE

Commissioner for Patents
United States Patent and Trademark Office
P.O. Box 1450
Alexandria, VA 22313-1450
www.uspto.gov

GE ENERGY GENERAL ELECTRIC
C/O ERNEST G. CUSICK
ONE RIVER ROAD, BLD. 43, ROOM 225
SCHENECTADY NY 12345

RECEIVED
DEC 19 2008
OFFICE OF PETITIONS

In re Application of :
Rogall, et al. :
Application No. 10/521,615 : ON PETITION
Filed: February 9, 2006 :
Attorney Docket No. 129494-4 :
For: WIND POWER PLANT AND ARRANGEMENT OF BEARINGS THEREFOR

This is a decision on the reconsideration petition under 37 CFR §1.183 to waive 37 CFR § 1.67, which requires that a supplemental declaration be executed by all named inventors. The petition was filed on November 7, 2008.

The petition under 37 CFR §1.183 requesting waiver of 37 CFR § 1.67 is **granted**.

The supplemental declaration that lacks Peter Rogall's and Martin Eilting's signatures has been accepted, on petition, and placed in the file.

A decision on the first Rule 183 petition was mailed on August 15, 2008. Petitioner was given an extendable two month period of time, measured from the mail date of the decision, to respond. The present reconsideration petition was filed on November 7, 2008. Pursuant to petitioner's authorization, deposit account no. 07-0849 will be charged a $130.00 one month extension of time fee.

After the mailing of this decision, the application will be returned to Technology Center AU 3745 for consideration of the amendment filed on June 16, 2008.

Telephone inquiries related to this decision should be directed to the undersigned at (571) 272-3230.

Shirene Willis Brantley
Senior Petitions Attorney
Office of Petitions

06 APR 2006

#5

UNITED STATES PATENT AND TRADEMARK OFFICE

Commissioner for Patents
United States Patent and Trademark Office
P.O. Box 1450
Alexandria, VA 22313-1450
www.uspto.gov

DORSEY & WHITNEY LLP
555 CALIFORNIA STREET
SUITE 1000
SAN FRANCISCO CA 94104

In re Application of	:	
DU BOIS et al.	:	
Application No.: 10/521,619	:	DECISION
PCT No.: PCT/US03/21575	:	
Int. Filing Date: 10 July 2003	:	
Priority Date: 15 July 2002	:	
Attorney Docket No.: A-71748/MSS (46305-770)	:	
For: THERMAL PROCESSING SYSTEM	:	
AND CONFIGURABLE VERTICAL CHAMBER	:	

This is a decision on applicants' petition under 37 CFR 1.47(a) filed 10 February 2006 in the United States Patent and Trademark Office (USPTO).

BACKGROUND

On 10 July 2003, applicants filed international application PCT/US03/21575, which designated the United States and claimed a priority date of 15 July 2002. A copy of the international application was communicated from the International Bureau to the USPTO on 22 January 2004. The thirty-month period for paying the basic national fee in the United States expired at midnight on 18 January 2005 (15 January 2005 being a Saturday and 17 January 2005 being a Federal holiday).

On 14 January 2005, applicants filed a submission for entry into the national stage in the United States which was accompanied by, *inter alia*, the U.S. Basic National Fee and the surcharge under 37 CFR 1.492(e) for providing the oath or declaration later than thirty months from the priority date.

On 05 July 2005, the United States Designated/Elected Office (DO/EO/US) mailed a NOTIFICATION OF MISSING REQUIREMENTS UNDER 35 U.S.C. 371 (Form PCT/DO/EO/905) indicating, *inter alia*, that an oath or declaration of the inventors in compliance with 37 CFR 1.497(a)-(b) was required.

On 10 February 2006, applicants filed the instant petition under 37 CFR 1.47(a) which was accompanied by, *inter alia*, a petition/fee for a five month extension of time, a declaration of inventors, a statement of facts by Maria Swiatek, a copy of a letter from Maria Swiatek to non-

signing inventor Jeffrey Kowalski dated 17 January 2006, and a copy of a letter from Maria Swiatek to non-signing inventor Jeffrey Kowalski dated 27 January 2006.

DISCUSSION

A petition under 37 CFR 1.47(a) must be accompanied by: (1) the fee under 37 CFR 1.17(h); (2) factual proof that the missing joint inventor refuses to execute the application or cannot be reached after diligent effort; (3) a statement of the last known address of the missing inventor; and (4) an oath or declaration by each 37 CFR 1.47(a) applicant on his or her own behalf and on behalf of the non-signing joint inventor.

As to item (1), the petition fee is $200 rather than $130. The balance of $70 has been charged to Deposit Account 50-2319.

Items (3) and (4) have been met.

As to item (2), to establish a refusal to sign, it is required that the inventor be presented with the application papers (specification, including claims, drawings, and oath or declaration). See MPEP 409.03(d). It does not appear that a copy of the application papers including the specification was sent to Mr. Kowalski. "It is reasonable to require that the inventor be presented with the application papers before a petition under 37 CFR 1.47 is granted since such a procedure ensures that the inventor is apprised of the application to which the oath or declaration is directed. *In re Gray*, 115 USPQ 80 (Comm'r Pat. 1956)." MPEP 409.03(d).

CONCLUSION

For the above reasons, applicants' petition under 37 CFR 1.47(a) is **DISMISSED** without prejudice.

If reconsideration on the merits of this petition is desired, a proper response must be filed within TWO (2) MONTHS from the mail date of this decision. **Failure to timely file the proper response will result in abandonment of this application.** Any reconsideration request should include a cover letter entitled "Renewed Petition Under 37 CFR 1.47(a)". No additional petition fee is required. Extensions of time may be obtained under 37 CFR 1.136(a).

Please direct further correspondence with respect to this matter to Mail Stop PCT, Commissioner for Patents, Office of PCT Legal Administration, P.O. Box 1450, Alexandria, Virginia 22313-1450, with the contents of the letter marked to the attention of the Office of PCT Legal Administration.

Daniel Stemmer
Legal Examiner
PCT Legal Affairs

Office of Patent Cooperation Treaty
Legal Administration
Telephone: (571) 272-3301
Facsimile: (571) 273-0459

#9

UNITED STATES PATENT AND TRADEMARK OFFICE

Commissioner for Patents
United States Patent and Trademark Office
P.O. Box 1450
Alexandria, VA 22313-1450
www.uspto.gov

22 JAN 2007

DORSEY & WHITNEY LLP
555 CALIFORNIA STREET
SUITE 1000
SAN FRANCISCO CA 94104

In re Application of	:	
DU BOIS et al.	:	
Application No.: 10/521,619	:	DECISION
PCT No.: PCT/US03/21575	:	
Int. Filing Date: 10 July 2003	:	
Priority Date: 15 July 2002	:	
Attorney Docket No.: A-71748/MSS (46305-770)	:	
For: THERMAL PROCESSING SYSTEM	:	
AND CONFIGURABLE VERTICAL CHAMBER	:	

This is a decision on applicants' renewed petition under 37 CFR 1.47(a) filed 10 October 2006 in the United States Patent and Trademark Office (USPTO).

BACKGROUND

On 10 July 2003, applicants filed international application PCT/US03/21575, which designated the United States and claimed a priority date of 15 July 2002. A copy of the international application was communicated from the International Bureau to the USPTO on 22 January 2004. The thirty-month period for paying the basic national fee in the United States expired at midnight on 18 January 2005 (15 January 2005 being a Saturday and 17 January 2005 being a Federal holiday).

On 14 January 2005, applicants filed a submission for entry into the national stage in the United States which was accompanied by, *inter alia*, the U.S. Basic National Fee and the surcharge under 37 CFR 1.492(e) for providing the oath or declaration later than thirty months from the priority date.

On 05 July 2005, the United States Designated/Elected Office (DO/EO/US) mailed a NOTIFICATION OF MISSING REQUIREMENTS UNDER 35 U.S.C. 371 (Form PCT/DO/EO/905) indicating, *inter alia*, that an oath or declaration of the inventors in compliance with 37 CFR 1.497(a)-(b) was required.

On 10 February 2006, applicants filed a petition under 37 CFR 1.47(a) which was accompanied by, *inter alia*, a petition/fee for a five month extension of time, a declaration of inventors, a statement of facts by Maria Swiatek, a copy of a letter from Maria Swiatek to non-signing inventor Jeffrey Kowalski dated 17 January 2006, and a copy of a letter from Maria

Swiatek to non-signing inventor Jeffrey Kowalski dated 27 January 2006.

On 06 April 2006, a decision was mailed dismissing, without prejudice, applicants' petition under 37 CFR 1.47(a) because it was not clear that the non-signing inventor had been presented with the application papers. To establish a refusal to sign, it is required that the inventor be presented with the application papers (specification, including claims, drawings, and oath or declaration).

On 10 October 2006, applicants submitted the instant renewed petition under 37 CFR 1.47(a) which was accompanied by, *inter alia*, a second statement of facts by Maria Swiatek, a copy of a letter from Maria Swiatek to non-signing inventor Jeffrey Kowalski dated 22 September 2006, a copy of a USPS Express Mail mailing label for a package sent to Mr. Kowalski on 22 September 2006, a copy of a letter from Maria Swiatek to non-signing inventor Jeffrey Kowalski dated 28 September 2006, a copy of a Federal Express US Airbill for a package sent to Mr. Kowalski on 28 September 2006.

DISCUSSION

A petition under 37 CFR 1.47(a) must be accompanied by: (1) the fee under 37 CFR 1.17(h); (2) factual proof that the missing joint inventor refuses to execute the application or cannot be reached after diligent effort; (3) a statement of the last known address of the missing inventor; and (4) an oath or declaration by each 37 CFR 1.47(a) applicant on his or her own behalf and on behalf of the non-signing joint inventor.

As noted in the decision mailed 06 April 2006, items (1) and (3) have been met.

Item (2) has now been satisfied as well.

The decision mailed 06 April 2006 indicated that item (4) had been met. However, upon further review of the declarations filed 10 February 2006, it was noted that the copy of the declaration signed by Craig Wildman is incomplete. It contains only three of the four pages (page 4 is missing). Thus, this declaration is not in compliance with 37 CFR 1.497(a)-(b).

CONCLUSION

For the above reasons, applicants' petition under 37 CFR 1.47(a) is **DISMISSED** without prejudice.

If reconsideration on the merits of this petition is desired, a proper response, must be filed within TWO (2) MONTHS from the mail date of this decision. A proper response would be a complete copy of the declaration signed by Craig Wildman. **Failure to timely file the proper response will result in abandonment of this application.** Any reconsideration request should include a cover letter entitled "Renewed Petition Under 37 CFR 1.47(a)". No additional petition fee is required. Extensions of time may be obtained under 37 CFR 1.136(a).

Please direct further correspondence with respect to this matter to Mail Stop PCT, Commissioner for Patents, Office of PCT Legal Administration, P.O. Box 1450, Alexandria, Virginia 22313-1450, with the contents of the letter marked to the attention of the Office of PCT Legal Administration.

Daniel Stemmer
Legal Examiner
PCT Legal Affairs
Office of Patent Cooperation Treaty
Legal Administration
Telephone: (571) 272-3301
Facsimile: (571) 273-0459

2 6 MAR 2007

#11

UNITED STATES PATENT AND TRADEMARK OFFICE

Commissioner for Patents
United States Patent and Trademark Office
P.O. Box 1450
Alexandria, VA 22313-1450
www.uspto.gov

DORSEY & WHITNEY LLP
555 CALIFORNIA STREET
SUITE 1000
SAN FRANCISCO CA 94104

In re Application of	:	
DU BOIS et al.	:	
Application No.: 10/521,619	:	DECISION
PCT No.: PCT/US03/21575	:	
Int. Filing Date: 10 July 2003	:	
Priority Date: 15 July 2002	:	
Attorney Docket No.: A-71748/MSS (46305-770)	:	
For: THERMAL PROCESSING SYSTEM	:	
AND CONFIGURABLE VERTICAL CHAMBER	:	

This is a decision on applicants' renewed petition under 37 CFR 1.47(a) filed 26 February 2007 in the United States Patent and Trademark Office (USPTO).

BACKGROUND

On 10 July 2003, applicants filed international application PCT/US03/21575, which designated the United States and claimed a priority date of 15 July 2002. A copy of the international application was communicated from the International Bureau to the USPTO on 22 January 2004. The thirty-month period for paying the basic national fee in the United States expired at midnight on 18 January 2005 (15 January 2005 being a Saturday and 17 January 2005 being a Federal holiday).

On 14 January 2005, applicants filed a submission for entry into the national stage in the United States which was accompanied by, *inter alia*, the U.S. Basic National Fee and the surcharge under 37 CFR 1.492(e) for providing the oath or declaration later than thirty months from the priority date.

On 05 July 2005, the United States Designated/Elected Office (DO/EO/US) mailed a NOTIFICATION OF MISSING REQUIREMENTS UNDER 35 U.S.C. 371 (Form PCT/DO/EO/905) indicating, *inter alia*, that an oath or declaration of the inventors in compliance with 37 CFR 1.497(a)-(b) was required.

On 10 February 2006, applicants filed a petition under 37 CFR 1.47(a) which was accompanied by, *inter alia*, a petition/fee for a five month extension of time, a declaration of inventors, a statement of facts by Maria Swiatek, a copy of a letter from Maria Swiatek to non-signing inventor Jeffrey Kowalski dated 17 January 2006, and a copy of a letter from Maria

Swiatek to non-signing inventor Jeffrey Kowalski dated 27 January 2006.

On 06 April 2006, a decision was mailed dismissing, without prejudice, applicants' petition under 37 CFR 1.47(a) because it was not clear that the non-signing inventor had been presented with the application papers. To establish a refusal to sign, it is required that the inventor be presented with the application papers (specification, including claims, drawings, and oath or declaration).

On 10 October 2006, applicants submitted a renewed petition under 37 CFR 1.47(a) which was accompanied by, *inter alia*, a second statement of facts by Maria Swiatek, a copy of a letter from Maria Swiatek to non-signing inventor Jeffrey Kowalski dated 22 September 2006, a copy of a USPS Express Mail mailing label for a package sent to Mr. Kowalski on 22 September 2006, a copy of a letter from Maria Swiatek to non-signing inventor Jeffrey Kowalski dated 28 September 2006, a copy of a Federal Express US Airbill for a package sent to Mr. Kowalski on 28 September 2006.

On 22 January 2007, a decision was mailed dismissing without prejudice applicants' renewed petition under 37 CFR 1.47(a) because upon further review of the declarations filed 10 February 2006, it was noted that the copy of the declaration signed by Craig Wildman was incomplete and thus not in compliance with 37 CFR 1.497(a)-(b).

On 26 February 2007, the instant renewed petition under 37 CFR 1.47(a) was filed which was accompanied by, *inter alia*, a declaration of inventors signed by Craig Wildman.

DISCUSSION

A petition under 37 CFR 1.47(a) must be accompanied by: (1) the fee under 37 CFR 1.17(h); (2) factual proof that the missing joint inventor refuses to execute the application or cannot be reached after diligent effort; (3) a statement of the last known address of the missing inventor; and (4) an oath or declaration by each 37 CFR 1.47(a) applicant on his or her own behalf and on behalf of the non-signing joint inventor.

As noted in the decision mailed 06 April 2006, items (1) and (3) have been met.

As noted in the decision mailed 22 January 2007, item (2) has also been met.

Item (4) has now been met as well. The declaration of inventors provided 26 February 2007 signed by Craig Wildman is complete. That declaration taken together with the other declarations filed 10 February 2006 are in compliance with 37 CFR 1.497(a)-(b).

CONCLUSION

For the above reasons, applicants' renewed petition under 37 CFR 1.47(a) is **GRANTED**.

As provided in 37 CFR 1.47(a), a notice of the filing of this application will be forwarded to non-signing inventor at his last known address of record.

A notice of the filing of the application under 37 CFR 1.47(a) will be published in the Official Gazette.

This application is being forwarded to the National Stage Processing Branch of the Office of PCT Operations to continue national stage processing of the application, including the accordation of a 35 U.S.C. §§371(c)(1), (c)(2), and (c)(4) date of **26 February 2007**.

Daniel Stemmer
Legal Examiner
PCT Legal Affairs
Office of Patent Cooperation Treaty
Legal Administration
Telephone: (571) 272-3301
Facsimile: (571) 273-0459

2 6 MAR 2007

UNITED STATES PATENT AND TRADEMARK OFFICE

Commissioner for Patents
United States Patent and Trademark Office
P.O. Box 1450
Alexandria, VA 22313-1450
www.uspto.gov

Jeffrey Kowalski
122 Zanzibar Road
Aptos, CA 95003-5541

In re Application of
DU BOIS et al.
Application No.: 10/521,619
PCT No.: PCT/US03/21575
Int. Filing Date: 10 July 2003
Priority Date: 15 July 2002
Attorney Docket No.: A-71748/MSS (46305-770)
For: THERMAL PROCESSING SYSTEM AND CONFIGURABLE VERTICAL CHAMBER

Dear Mr. Kowalski:

You are named as an inventor in the above-captioned United States national stage application, filed under the provisions of 37 CFR 1.47(a) and 35 U.S.C. 116. Should a patent be granted, you will be designated as an inventor.

As a named inventor, you are entitled to inspect any paper in the file wrapper of the application, order copies of all or any part thereof (at a prepaid cost per 37 CFR 1.19) or to make your position of record in the application. Alternatively, you may arrange to do any of the preceding through a registered patent agent or attorney presenting written authorization from you. Joining in the application would entail the filing of an appropriate oath or declaration by you pursuant to 37 CFR 1.63.

Daniel Stemmer
PCT Legal Examiner
PCT Legal Affairs
Office of Patent Cooperation Treaty
Legal Administration
Telephone: (571) 272-3301
Facsimile: (571) 273-0459

DORSEY & WHITNEY LLP
555 CALIFORNIA STREET
SUITE 1000
SAN FRANCISCO CA 94104

UNITED STATES PATENT AND TRADEMARK OFFICE

UNITED STATES DEPARTMENT OF COMMERCE
United States Patent and Trademark Office
Address: COMMISSIONER FOR PATENTS
P.O. Box 1450
Alexandria, Virginia 22313-1450
www.uspto.gov

APPLICATION NO.	FILING DATE	FIRST NAMED INVENTOR	ATTORNEY DOCKET NO.	CONFIRMATION NO.
10/521,619	02/26/2007	Dale R. Du Bois	A-71748/MSS (463035-770)	2146

7590 07/30/2008

DORSEY & WHITNEY LLP
555 CALIFORNIA STREET, SUITE 1000
SUITE 1000
SAN FRANCISCO, CA 94104

EXAMINER

ART UNIT	PAPER NUMBER
3742	

MAIL DATE	DELIVERY MODE
07/30/2008	PAPER

DECISION DISMISSING PETITION UNDER 37 CFR 1.138(d)

The declaration of express abandonment will not be recognized

This is in response to the petition under 37 CFR 1.138(d), requesting for a refund of any previously paid search fee and excess claims fee in the above-identified application.

The petition is dismissed.

The express abandonment will **not** be recognized for the reason(s) indicated below:

1. ☐ The petition was not filed in sufficient time to permit the appropriate officials to recognize the abandonment before an examination has been made of the application. See 37 CFR 1.138(d).

2. ☐ The petition was not signed by a party authorized by 37 CFR 1.33(b)(1), (3) or (4).

3. ☒ The application is not an application filed under 35 U.S.C. 111(a) on or after December 8, 2004.

4. ☐ The petition for express abandonment under 1.138(d) is dismissed because the applicant did not pay any search fee and excess claims fees in the above-identified application.

Telephone inquiries should be directed to the Office of Data Management at (571) 272-4200.

Betty Powell

Patent Publication Branch
Office of Data Management

FORM PET651D (Rev. 08/07)

UNITED STATES PATENT AND TRADEMARK OFFICE

Commissioner for Patents
United States Patent and Trademark Office
P.O. Box 1450
Alexandria, VA 22313-1450
www.uspto.gov

Paper No.

FINNEGAN, HENDERSON, FARABOW,
GARRETT & DUNNER LLP
901 NEW YORK AVENUE, NW
WASHINGTON DC 20001-4413

MAILED

JUN 11 2010

OFFICE OF PETITIONS

In re Patent No. 7,602,969	: DECISION ON REQUEST
Yamada et al.	: FOR RECONSIDERATION OF
Issue Date: October 13, 2009	: PATENT TERM ADJUSTMENT
Application No. 10/521,623	: and
Filed: January 14, 2005	: NOTICE OF INTENT TO ISSUE
Atty Docket No. 09812.0503-00000	: CERTIFICATE OF CORRECTION

This is a decision on the petition filed on November 19, 2009, which is being treated as a petition under 37 CFR 1.705(d) requesting that the patent term adjustment indicated on the above-identified patent be corrected to indicate that the term of the above-identified patent is extended or adjusted by one thousand, one hundred and ninety-six (1196) days.

The petition to correct the patent term adjustment indicated on the above-identified patent to indicate that the term of the above-identified patent is extended or adjusted by one thousand, one hundred and ninety-six (1196) days is **GRANTED**.

The $200.00 fee set forth in 37 CFR 1.18(e) will be charged to Petitioner's Deposit Account in due course. No additional fees are required.

The application is being forwarded to the Certificates of Correction Branch for issuance of a certificate of correction. The Office will issue a certificate of correction indicating that the term of the above-identified patent is extended or adjusted by **one thousand, one hundred and ninety-six (1196) days.**

Telephone inquiries specific to this matter should be directed to Senior Attorney Paul Shanoski at (571) 272-3225.

Nancy Johnson
Senior Petitions Attorney
Office of Petitions

Enclosure: Copy of DRAFT Certificate of Correction

UNITED STATES PATENT AND TRADEMARK OFFICE

CERTIFICATE OF CORRECTION

PATENT : 7,602,969 B2

DATED : **October 13, 2009** **DRAFT**

INVENTOR(S) : **Yamada et al.**

It is certified that error appears in the above-identified patent and that said Letters Patent is hereby corrected as shown below:

On the cover page,

[*] Notice: Subject to any disclaimer, the term of this patent is extended or adjusted under 35 USC 154(b) by 819 days

Delete the phrase "by 819 days" and insert – by 1196 days --

UNITED STATES PATENT AND TRADEMARK OFFICE

UNITED STATES DEPARTMENT OF COMMERCE
United States Patent and Trademark Office
Address: COMMISSIONER FOR PATENTS
P.O. Box 1450
Alexandria, Virginia 22313-1450
www.uspto.gov

VENABLE LLP
P.O. BOX 34385
WASHINGTON, DC 20043-9998

Mail Date: 04/21/2010

Applicant	: Ted A Laurence	: DECISION ON REQUEST FOR
Patent Number	: 7599059	: RECALCULATION of PATENT
Issue Date	: 10/06/2009	: TERM ADJUSTMENT IN VIEW
Appliction No	: 10/521,632	: OF WYETH AND NOTICE OF INTENT TO
Filed	: 02/09/2006	: ISSUE CERTIFICATE OF CORRECTION
		:

The Request for Recalculation is **GRANTED** to the extent indicated.

The patent term adjustment has been determined to be **608** days. The USPTO will *sua sponte* issue a certificate of correction reflecting the amount of PTA days determined by the recalculation.

Prior to the issuance of the certificate of correction, the USPTO will afford patentee an opportunity to be heard and request reconsideration. Accordingly, patentee has **one month or thirty (30) days**, whichever is longer, to file a request for reconsideration of this patent term adjustment calculation. See 35 U.S.C. 154(b)(3)(B)(ii) and 37 CFR 1.322(a)(4). No extensions of time will be granted under 37 CFR 1.136.

Patentee should use document code PET.OP if electronically filing a request for reconsideration of this patent term adjustment calculation. The patentee must also include the information required by 37 CFR 1.705(b)(2) and the fee required by 37 CFR 1.18(e). If patentee does not file a timely request for reconsideration of this patent term adjustment calculation including the information required by 37 CFR 1.705(b)(2) and the fee required by 37 CFR 1.18(e), the USPTO will issue a certificate of correction reflecting the PTA determination noted above.

Patentee should be aware that in order to preserve the right to review in the United States District Court for the District of Columbia of the USPTO patent term adjustment determination, patentee must ensure that he or she also take the steps required under 35 U.S.C. 154(b)(4)(A) in a timely manner. Nothing in the request for recalculation should be construed as providing an alternative time frame for commencing a civil action under 35 U.S.C. 154(b)(4)(A).

Any questions concerning this decision should be directed to the Office of Patent Legal Administration at 571-272-7702.

UNITED STATES PATENT AND TRADEMARK OFFICE

Commissioner for Patents
United States Patent and Trademark Office
P.O. Box 1450
Alexandria, VA 22313-1450
www.uspto.gov

Paper No. 060905

SWANSON & BRATSCHUN L.L.C.
1745 Shea Center Drive
Suite 330
Highlands Ranch, CO 80129

NOV 0 8 2005

In re Application of:	:	
DIETZ *et al.*	:	
Serial No.: 10/521,638	:	DECISION ON REQUEST TO WITHDRAW FROM RECORD
Filed: April 22, 2003	:	
Attorney Docket No.: **SURR.109**	:	

This is a decision on the request to withdraw as attorney/agent of record under 37 C.F.R. § 1.36, filed February 25, 2005.

A grantable request to withdraw as attorney of record must be signed by every attorney seeking to withdraw or contain a clear indication that one attorney is signing on behalf of others. A request to withdraw will not be approved unless at least thirty (30) days would remain between the date of approval and the later of the expiration date of a time to file a response or the expiration date of the maximum time period, which can be extended under 37 C.F.R. § 1.136(a).

The request meets all the above stated requirements. The request was signed by Darla G. Yoerg on behalf of herself and all the attorneys/agents of record. There is at least thirty (30) days remaining between the date of approval and the later of the expiration date of a time to file a response or the expiration date of the maximum time period.

The request is **APPROVED**.

All future communications from the Office will be directed to the below address, until otherwise notified by applicant.

Inquiries related to this decision should be directed to Clayton E. LaBalle at (571) 272-1594.

Clayton E. LaBalle, Special Programs Examiner
Technology Center 2800
Semiconductors, Electrical and Optical
Systems and Components

cc: SHERIDAN ROSS PC
1560 Broadway
Suite 1200
Denver CO 80202

UNITED STATES PATENT AND TRADEMARK OFFICE

Commissioner for Patents
United States Patent and Trademark Office
P.O. Box 1450
Alexandria, VA 22313-1450
www.uspto.gov

#8

26 JUL 2006

Dilworth Barrese
Suite 702
333 Earle Ovington Boulevard
Uniondale, NY 11553

In re Application of SEDERLJUNG et al. Application No.: 10/521,653 PCT No.: PCT/SE03/01074 Int. Filing: 23 June 2003 Priority Date: 15 July 2002 Attorney Docket No.: 821-70 For: A DEVICE IN A VEHICLE ADAPTED TO HANDLE LOADS	DECISION ON RENEWED PETITION UNDER 37 CFR 1.47(a)

This is a decision on applicant's renewed petition under 37 CFR 1.47(a), filed in the United States Patent and Trademark Office (USPTO) on 23 June 2006, to accept the application without the signature of joint inventor, Kurt Dahlström. Petitioner requests a one month extension of time, which is granted.

BACKGROUND

On 14 January 2005, applicant filed a transmittal letter (PTO-1390) requesting entry into the national stage in the United States of America under 35 U.S.C. § 371. Filed with the Transmittal Letter was, *inter alia*, the requisite basic national fee.

On 22 July 2005, a Notification of Missing Requirements (FORM PCT/DO/EO/905) was mailed to applicant indicating *inter alia*, that an oath or declaration in accordance with 37 CFR 1.497(a) and (b) and the surcharge for filing the oath or declaration after the thirty month period was required.

On 21 December 2005, applicant filed the instant petition along with a declaration, executed by the joint inventors on behalf of the deceased inventor, Kurt Dahlström and his nonsigning legal representative. The petition under 37 CFR 1.47(a) in an attempt to satisfy the requirements of 35 U.S.C. 371(c)(4) requested the acceptance of the application without the signature of deceased inventor Kurt Dahlström, alleging that Mr. Dahlström's legal representative refuses to sign the application.

On 28 March 2006, a decision dismissing the petition was mailed to applicant indicating that the last known address of non-signing legal representative of the deceased inventor was not provided and the declaration executed by the available joint inventor did not satisfy the requirements of 37 CFR 1.47(a) as it did not comply with 37 CFR 1.497(a) and (b).

On 23 June 2006, Petitioner filed a renewed petition along with a newly executed declaration.

DISCUSSION

Refusal of Legal Representative to Sign Application Papers

As previously stated, a petition under 37 CFR §1.47(a) must be accompanied by (1) the fee under 37 CFR §1.17(h), (2) factual proof that the non-signing joint inventor(s) refuses to execute the application or cannot be reached after diligent effort, (3) a statement of the last known address of the non-signing inventor(s), and (4) an oath or declaration by each available joint inventor on his or her own behalf and on behalf of the non-signing joint inventor(s).

Item (1) and Item (2) were previously satisfied.

Item (3) is now satisfied because the last known address of non-signing legal representative of the deceased inventor was provided.

With regard to item (4), a new declaration, executed by the available joint inventor and in compliance with 37 CFR 1.497(a) and (b) has been submitted. The declaration only identifies joint inventor Max Sederljung and the deceased inventor Kurt Dahlström and his legal representative, Johanna Dahlström. In compliance with 37 CFR 1.497(a) and (b), the declaration states the citizenship, mailing address and residency of all inventors, including that of the deceased inventor and the legal representative.

In sum, Petitioner has satisfied Items (1) - (4) above. It is appropriate to accord the national stage application status under 37 CFR §1.47(a) at this time.

Status under 37 CFR 1.42

The legal representative of a deceased inventor must make the application for patent "on the same terms and conditions applicable to the inventor." 35 U.S.C. 117. To this end, 37 CFR 1.497(b)(2) states, in pertinent part,:

> If the person making the oath or declaration or any supplemental declaration is not the inventor (§§1.42, 1.43 or §1.47), the oath or declaration shall state the relationship of the person to the inventor...and the citizenship, residence and mailing address of the legal representative.

37 CFR 1.497(b)(2) requires the declaration to *state the relationship* of the person(s) (under 37 CFR 1.42) making the declaration for a deceased inventor and *state the citizenship, residency and mailing address of the heir(s)/legal representative* as well as that of the deceased inventor. The declaration provides the citizenship, residency and last known mailing address for the deceased inventor and for his legal representative. The declaration identifies Johanna Dahlström as the legal representative of Kurt Dahlström as required by 37 CFR 1.497(b)(2).

Accordingly, the request for status under 37 CFR 1.42 is also granted.

CONCLUSION

The petition under 37 CFR §1.47(a) is **GRANTED**. The request for status under 37 CFR 1.42 is **GRANTED**.

The U.S. Designated/Elected Office is authorized to accept the application as a 37 CFR 1.47(a) application using the declaration filed 23 June 2006. The application has an international filing date of 23 June 2003 under 35 U.S.C. 363, and a date of 23 June 2006 under 35 U.S.C. 371(c)(1), (c)(2) and (c)(4).

As provided in 37 CFR 1.47(a), a notice of the filing of this application will be forwarded to the non-signing inventors at their respective last known address of record. Also, a notice of the filing of this application will be published in the Official Gazette.

Cynthia M. Kratz

Cynthia M. Kratz
Attorney Advisor
PCT Legal Office
Office of PCT Legal Administration

Telephone: (571) 272-3286
Facsimile (571) 272-0459

UNITED STATES PATENT AND TRADEMARK OFFICE

Commissioner for Patents
United States Patent and Trademark Office
P.O. Box 1450
Alexandria, VA 22313-1450
www.uspto.gov

26 JUL 2006

JOHANNA DAHLSTROM
NorrgÅrden 40
Vallentuna
E-18644 SWEDEN

In re Application of SEDERLJUNG et al. Application No.: 10/521,653 PCT No.: PCT/SE03/01074 Int. Filing: 23 June 2003 Priority Date: 15 July 2002 Attorney Docket No.: 821-70 For: A DEVICE IN A VEHICLE ADAPTED TO HANDLE LOADS	DECISION ON RENEWED PETITION UNDER 37 CFR 1.47(a)

Dear Ms. Dahlstrom:

You are named as an inventor in the above identified United States patent application, filed under the provisions of 37 CFR 1.47(a) and 35 U.S.C. § 116. Should a patent be granted, you will be designated as an inventor.

As a named inventor, you are entitled to inspect any paper in the file wrapper of the application, order copies of all or any part thereof (at a prepaid cost per 37 CFR 1.19) or to make your position of record in the application. Alternatively, you may arrange to do any of the preceding through a registered patent agent or attorney presenting written authorization from you. If you care to join in the application, counsel of record (see below) would presumably assist you. Joining in the application would entail the filing of an appropriate oath or declaration by you pursuant to 37 CFR 1.63.

Cynthia M. Kratz
Attorney Advisor
PCT Legal Office

Telephone: (571)272 -3286

Dilworth Barrese
Suite 702
333 Earle Ovington Boulevard
Uniondale, NY 11553

UNITED STATES PATENT AND TRADEMARK OFFICE

Commissioner for Patents
United States Patent and Trademark Office
P.O. Box 1450
Alexandria, VA 22313-1450
www.uspto.gov

BOZICEVIC, FIELD & FRANCIS LLP
1900 UNIVERSITY AVENUE
SUITE 200
EAST PALO ALTO, CA 94303

COPY MAILED

MAY 07 2009

OFFICE OF PETITIONS

In re Application of	:	
CHUNG, Hesson et al.	:	
Application No. 10/521,669	:	DECISION ON PETITION
Filed: November 08, 2005	:	TO WITHDRAW
Attorney Docket No. **4698-0109PUS1**	:	FROM RECORD
	:	

This is a decision on the Request to Withdraw as attorney or agent of record under 37 C.F.R. § 1.36(b), filed December 10, 2008.

The request is **NOT APPROVED** because it is moot.

A review of the file record indicates that the power of attorney to Bozicevic, Field & Francis LLP has been revoked by the assignee of the patent application on December 15, 2008. Accordingly, the request to withdraw under 37 C.F.R. § 1.36(b) is moot.

All future communications from the Office will continue to be directed to the below-listed address until otherwise notified by applicant.

Telephone inquires concerning this decision should be directed to Michelle R. Eason at 571-272- 4231.

Michelle R. Eason
Paralegal Specialist
Office of Petitions

cc: **BIRCH STEWART KOLASCH & BIRCH**
PO BOX 747
FALLS CHURCH VA 22040-0747

UNITED STATES PATENT AND TRADEMARK OFFICE

UNITED STATES DEPARTMENT OF COMMERCE
United States Patent and Trademark Office
Address: COMMISSIONER FOR PATENTS
P.O. Box 1450
Alexandria, Virginia 22313-1450
www.uspto.gov

MORRISON & FOERSTER LLP
755 PAGE MILL RD
PALO ALTO, CA 94304-1018

Mail Date: 04/21/2010

Applicant	: Javaan Singh Chahl	: DECISION ON REQUEST FOR
Patent Number	: 7593794	: RECALCULATION of PATENT
Issue Date	: 09/22/2009	: TERM ADJUSTMENT IN VIEW
Appliction No	: 10/521,676	: OF WYETH AND NOTICE OF INTENT TO
Filed	: 09/12/2005	: ISSUE CERTIFICATE OF CORRECTION
		:

The Request for Recalculation is **GRANTED** to the extent indicated.

The patent term adjustment has been determined to be **982** days. The USPTO will *sua sponte* issue a certificate of correction reflecting the amount of PTA days determined by the recalculation.

Prior to the issuance of the certificate of correction, the USPTO will afford patentee an opportunity to be heard and request reconsideration. Accordingly, patentee has **one month or thirty (30) days**, whichever is longer, to file a request for reconsideration of this patent term adjustment calculation. See 35 U.S.C. 154(b)(3)(B)(ii) and 37 CFR 1.322(a)(4). No extensions of time will be granted under 37 CFR 1.136.

Patentee should use document code PET.OP if electronically filing a request for reconsideration of this patent term adjustment calculation. The patentee must also include the information required by 37 CFR 1.705(b)(2) and the fee required by 37 CFR 1.18(e). If patentee does not file a timely request for reconsideration of this patent term adjustment calculation including the information required by 37 CFR 1.705(b)(2) and the fee required by 37 CFR 1.18(e), the USPTO will issue a certificate of correction reflecting the PTA determination noted above.

Patentee should be aware that in order to preserve the right to review in the United States District Court for the District of Columbia of the USPTO patent term adjustment determination, patentee must ensure that he or she also take the steps required under 35 U.S.C. 154(b)(4)(A) in a timely manner. Nothing in the request for recalculation should be construed as providing an alternative time frame for commencing a civil action under 35 U.S.C. 154(b)(4)(A).

Any questions concerning this decision should be directed to the Office of Patent Legal Administration at 571-272-7702.

UNITED STATES PATENT AND TRADEMARK OFFICE

UNITED STATES DEPARTMENT OF COMMERCE
United States Patent and Trademark Office
Address: COMMISSIONER FOR PATENTS
P.O. Box 1450
Alexandria, Virginia 22313-1450
www.uspto.gov

MORRISON & FOERSTER LLP
755 PAGE MILL RD
PALO ALTO, CA 94304-1018

Mail Date: 05/18/2010

Applicant : Javaan Singh Chahl
Patent Number : 7593794
Issue Date : 09/22/2009
Application No : 10/521,676
Filed : 09/12/2005

: NOTICE CONCERNING IMPROPER
: CALCULATION OF PATENT TERM
: ADJUSTMENT BASED UPON USPTO
: IMPROPERLY MEASURING REDUCTION
: PERIOD UNDER 37 CFR 1.704(c)(10).

The United States Patent and Trademark Office (USPTO) discovered that in processing the recent recalculation decisions mailed in response to patentee's filed Request for Recalculation of Patent Term Adjustment in view of Wyeth, the USPTO improperly measured the reduction period for reductions under 37 CFR 1.704(c)(10). Pursuant to 37 CFR 1.704(c)(10), patentee's reduction begins on the date of filing the amendment under 37 CFR 1.312 ("1.312 amendment") or other related paper and ends on the date that the Office mails a response to the filing of the 1.312 amendment or other paper. It has been discovered that during the recalculation, the calculation failed to the limit the reduction to the mail date of the response to the 1.312 amendment or other paper. Accordingly, patentee's reductions were greater than warranted.

This notice **VACATES** the previous GRANTED request for recalculation and provides patentee with a revised GRANTED recalculation.

The patent term adjustment has been determined to be **1017** days. The USPTO will *sua sponte* issue a certificate of correction reflecting the amount of patent term adjustment (PTA) days determined by the recalculation.

Prior to the issuance of the certificate of correction, the USPTO will afford patentee an opportunity to be heard and request reconsideration. Accordingly, patentee has **one month or thirty (30) days** from the mail date of this notice, whichever is longer, to file a request for reconsideration of this PTA calculation. See 35 U.S.C. § 154(b)(3)(B)(ii) and 37 CFR 1.322(a)(4).

Patentee should use document code PET.OP if electronically filing a request for reconsideration of this PTA calculation. The patentee must also include the information required by 37 CFR 1.705(b)(2), and the fee required by 37 CFR 1.18(e). If patentee does not file a timely request for reconsideration of this PTA calculation, including the information required by 37 CFR 1.705(b)(2) and the fee required by 37 CFR 1.18(e), the USPTO will issue a certificate of correction reflecting the PTA determination noted above.

Patentee should be aware that in order to preserve the right of review of the USPTO's PTA determination in the United States District Court for the District of Columbia, patentee must ensure that the steps required under 35 U.S.C. § 154 (b)(4) are taken in a timely manner. Nothing in the request for recalculation should be construed as providing an alternative time frame for commencing a civil action under 35 U.S.C. § 154(b)(4).

UNITED STATES PATENT AND TRADEMARK OFFICE

Commissioner for Patents
United States Patent and Trademark Office
P.O. Box 1450
Alexandria, VA 22313-1450
www.uspto.gov

BOZICEVIC, FIELD & FRANCIS LLP
1900 UNIVERSITY AVENUE
SUITE 200
EAST PALO ALTO, CA 94303

COPY MAILED
MAY 01 2009
OFFICE OF PETITIONS

In re Application of	:	
CHUNG, Hesson et al.	:	
Application No. 10/521,678	:	DECISION ON PETITION
Filed: September 02, 2005	:	TO WITHDRAW
Attorney Docket No. **4698-0111PUS1**	:	FROM RECORD

This is a decision on the Request to Withdraw as attorney or agent of record under 37 C.F.R. § 1.36(b), filed December 10, 2008.

The request is not approved because it is **moot**.

A review of the file record indicates that the power of attorney to BOZICEVIC, FIELD & FRANCIS LLP has been revoked by the assignee of the patent application on December 15, 2008. Accordingly, the request to withdraw under 37 C.F.R. § 1.36(b) is moot.

All future communications from the Office will continue to be directed to the below-listed address until otherwise notified by applicant.

Telephone inquires concerning this decision should be directed to Tredelle Jackson at 571-272-2783.

Tredelle D. Jackson
Paralegal Specialist
Office of Petitions

cc: **BIRCH STEWART KOLASCH & BIRCH**
PO BOX 747
FALLS CHURCH VA 22040-0747

UNITED STATES PATENT AND TRADEMARK OFFICE

Commissioner for Patents
United States Patent and Trademark Office
P.O. Box 1450
Alexandria, VA 22313-1450
www.uspto.gov

HUNTLEY & ASSOCIATES
1105 NORTH MARKET STREET
P.O. BOX 948
WILMINGTON, DE 19899-0948

COPY MAILED

OCT 0 2 2006

OFFICE OF PETITIONS

In re Application of	:	
Obara, et al.	:	
Application No. 10/521,689	:	DECISION ON PETITION
Filed: January 18, 2005	:	TO WITHDRAW
Attorney Docket No. Toyo-1	:	FROM RECORD
	:	

This is a decision on the Request to Withdraw as attorney or agent of record under 37 C.F.R. § 1.36(b), filed March 27, 2006.

The request is **NOT APPROVED**.

A grantable request to withdraw as attorney/agent of record must be signed by every attorney/agent seeking to withdraw or contain a clear indication that one attorney is signing on behalf of another/others. A request to withdraw will not be approved unless at least 30 (thirty) days would remain between the date of approval and the later of the expiration date of a time to file a response or the expiration date of the maximum time period which can be extended under 37 C.F.R. § 1.136(a).

The Office cannot approve the request at this time since the reasons provided do not meet any of the conditions under the mandatory or permissive categories enumerated in 37 CFR 10.40. Section 10.40 of Title 37 of the Code of Federal Regulation states, "[a] practitioner shall not withdraw from employment in a proceeding before the Office without permission from the Office[.]" More specifically, 37 CFR 10.40 states, "[i]f paragraph (b) of this section is not applicable, a practitioner may not request permission to withdraw in matter pending before the Office unless such request or such withdrawal is" for one the permissive reasons listed in 37 CFR 10.40(c). The reasons set forth in the request, "attorney asked for cases to be transferred", does not meet any the conditions set forth in 37 CFR 10.40.

All future communications from the Office will continue to be directed to the above-listed address until otherwise notified by applicant.

Telephone inquiries concerning this decision should be directed to April Wise at 571-272-1642.

April M. Wise
Petitions Examiner
Office of Petitions

cc: GOMEZ INTERNATIONAL PATENT OFFICE, LLC
1501 N. RODNEY STREET
SUITE 101
WILMINGTON, DE 19806

22 MAR 2006

UNITED STATES PATENT AND TRADEMARK OFFICE

Commissioner for Patents
United States Patent and Trademark Office
P.O. Box 1450
Alexandria, VA 22313-1450
www.uspto.gov

Madson & Metcalf
15 West South Temple
Suite 900
Salt Lake City UT 84101

In re Application of	:	
NUNN, Peter	:	
Application No.: 10/521,690	:	DECISION
PCT No.: PCT/CA03/01032	:	
Int. Filing Date: 17 July 2003	:	ON PETITION UNDER
Priority Date: 17 July 2002	:	
Docket No.: 2600.2.33	:	37 CFR 1.10(c)
For: WATER TREATMENT DEVICE ... AND	:	
RE-RESONATING WATER	:	

This decision is in response to applicant's "Request for Corrected Filing Date," filed in the United States Patent and Trademark Office on 13 October 2005. It has been treated as a petition under 37 CFR 1.10(c).

BACKGROUND

On 17 July 2003, applicant filed international application PCT/CA03/01032, which claimed a priority date of 17 July 2002. A copy of the international application was transmitted to the United States Patent and Trademark Office from the International Bureau (IB) on 22 January 2004. The thirty month period for paying the basic national fee expired at midnight on 17 January 2005.

Applicant filed a transmittal letter for entry into the national stage in the United States, accompanied by, *inter alia*, the basic national fee. It was accorded a receipt date of 18 January 2005.

On 03 October 2005, the Office mailed a Notification of Acceptance (Form PCT/DO/EO/903) and a Filing Receipt indicating that the requirements under 35 U.S.C. 371 were satisfied on 18 January 2005.

On 13 October 2005, applicant filed the instant petition under 37 CFR 1.10(c).

DISCUSSION

In the instant petition, applicant requests that the receipt date of application No. 10/521,690 be amended to 14 January 2005. The requirements for a petition to correct a receipt date based on Express Mail records are set forth in 37 CFR 1.10(c). The section states as follows:

> (c) Any person filing correspondence under this section that was received by the Office and delivered by the "Express Mail Post Office to Addressee" service of the USPS, who can show that there is a discrepancy between the filing date accorded by the Office to the correspondence and the date of deposit as shown by the "date-in" on the "Express Mail" mailing label or other official USPS notation, may petition the Director to accord the correspondence a filing date as of the "date-in" on the "Express Mail" mailing label or other official USPS notation, provided that:

> (1) The petition is filed promptly after the person becomes aware that the Office has accorded, or will accord, a filing date other than the USPS deposit date;
>
> (2) The number of the "Express Mail" mailing label was placed on the paper(s) or fee(s) that constitute the correspondence prior to the original mailing by "Express Mail;" and
>
> (3) The petition includes a true copy of the "Express Mail" mailing label showing the "date-in," and of any other official notation by the USPS relied upon to show the date of deposit.

Items (1), (2) and (3) have been met. The petition was filed promptly. The Express Mail mailing label number was listed on the correspondence. Applicant has provided a copy of the Express Mailing mailing label with the "date-in" listed as 14 January 2005.

A review of the declaration of inventorship filed during the international phase reveals it does not comply with requirements. Applicants supplied the declaration under 4.17 after the initial filing, under PCT Rule 26*ter*. A declaration supplied under PCT Rule 26*ter*, must identify the international application number to which it is directed. Applicants used the declaration form for a declaration that formed a part of the original filing. It does not list the international application number. As such applicants have not supplied a declaration in compliance with 37 CFR 1.497(a)-(b) and have not fulfilled the requirements under 35 U.S.C. §371(c)(1), (c)(2) and (c)(4).

CONCLUSION

For the reasons listed above, applicant's petition under 37 CFR 1.10(c) to correct the receipt date of the filing to 14 January 2005 is **GRANTED**.

The Notification of Acceptance (Form PCT/DO/EO/903) and Filing Receipt mailed 03 October 2005 are **VACATED**.

This application is being forwarded to the National Stage Processing Branch of the Office of PCT Operations for continued processing in accordance with this decision, including the mailing of a Notification of Missing Requirements (Form PCT/DO/EO/905) indicating that an oath or declaration in compliance with 37 CFR 1.497(a)-(b) and the surcharge for late filing of the search fee, examination fee or oath or declaration are required.

Erin P. Thomson

Erin P. Thomson
Attorney Advisor
PCT Legal Administration

Telephone: 571-272-3292
Facsimile: 571-273-0459

SPE RESPONSE FOR CERTIFICATE OF CORRECTION

DATE : 5/21/08

Paper No.: —

TO SPE OF : ART UNIT 2857

SUBJECT : Request for Certificate of Correction for Appl. No.: 10/521697 Patent No: 7292945 B2

A response is requested with respect to a request for a certificate of correction.

With respect to the change(s) requested to correct Office and/or Applicant's errors, should the patent read as shown in the certificate of correction attached herewith or the COCIN document(s), in IFW images for the above-identified patented application? No new matter should be introduced, nor should the scope or meaning of the claims be changed.

If the response is for an IFW, within 7 days, please complete and forward the response, to the employee (named below) via scanning into application images, using document code **COCX**.

If the response is for a paper file wrapper, please complete the response and forward the response with the paper file wrapper, to the employee (named below), within 7 days, to:

Certificates of Correction Branch (CofC)
South Tower - 9A22
Palm Location 7580

VIRGINIA TOLBERT
Certificates of Correction Branch
703-308-9390 ext. 113

Thank You For Your Assistance

The request for issuing the above-identified correction(s) is hereby:
Note your decision on the appropriate box.

- [X] **Approved** — All changes apply.
- [ ] **Approved in Part** — Specify below which changes **do not** apply.
- [ ] **Denied** — State the reasons for denial below.

Comments:

Please enter the correction to the specification.

/E.R./

ELISEO RAMOS-FELICIANO
SUPERVISORY PATENT EXAMINER
SPE

2857
Art Unit

PTOL-306 (REV. 7/03)

U.S. DEPARTMENT OF COMMERCE Patent and Trademark Office

01 FEB 2005

#3

UNITED STATES PATENT AND TRADEMARK OFFICE

COMMISSIONER FOR PATENTS
UNITED STATES PATENT AND TRADEMARK OFFICE
P.O. BOX 1450
ALEXANDRIA, VA 22313-1450
www.uspto.gov

Benjamin Aaron Adler
Adler & Associates
8011 Candle Lane
Houston, Texas 77071

In re Application of	:	
TEMPST et al.	:	
U.S. Application No.: 10/521,712	:	
PCT No.: PCT/US02/33917	:	DECISION ON PETITION
Int. Filing Date: 23 October 2002	:	
Priority Date: 23 October 2001	:	
Attorney Docket No.: D6424PCT	:	
For: PROTEIN MICRO-ARRAYS AND MULTI-LAYERED AFFINITY INTERACTION DETECTION	:	

This is a decision on applicants' "Resubmission of Petition to Revive" filed 19 January 2005, which is being treated as a Petition under 37 CFR 1.181 and 37 CFR 1.137(b).

BACKGROUND

On 23 October 2002, applicants filed international application PCT/US02/33917 which claimed a priority date of 23 October 2001. Pursuant to 37 CFR 1.495, the deadline for payment of the basic national fee in the United States was to expire 30 months from the priority date, 23 April 2004.

On 19 January 2005, applicants filed "Resubmission of Petition to Revive."

DISCUSSION

A. Petition under 37 CFR 1.181

Applicants state in their present petition that the basic national fee, transmittal letter to enter the United States national stage, and a petition to revive under 37 CFR 1.137(a) were received by the USPTO on 23 July 2004. A review of the application file reveals that the papers are not located therein. Section 503 of the Manual of Patent Examining Procedure under the heading "RETURN POSTCARD" states, in part:

> "A postcard receipt which itemizes and properly identifies the papers which are being filed serves as prima facie evidence of receipt in the PTO of all the items listed thereon on the date stamped thereon by the PTO."

Here, applicants have provided a copy of their date-stamped filing receipt. The receipt identifies the application by the title of invention; application number; and the docket number. The evidence submitted by applicants, consisting of a postcard receipt with a PCT/PTO mailroom date stamp of 23 July 2004 which itemizes all the papers filed on said date. The postcard receipt bearing the serial number, title of invention, and attorney docket number is sufficient to indicate that the above papers were received on 23 July 2004.

B. Petition under 37 CFR 1.137(b)

A petition under 37 CFR 1.137(b) requesting that the application be revived on the grounds of unintentional abandonment must be accompanied by (1) the required reply, (2) the petition fee required by law, (3) a statement that the "entire delay in filing the required reply from the due date for the reply until the filing of a grantable petition pursuant to this paragraph was unintentional," and (4) any terminal disclaimer and fee required pursuant to 37 CFR 1.137(c).

With regard to Item (1), the proper response was the payment of the basic national fee of $385.00.

As to Item (2), the appropriate petition fee of $665.00 as required by 37 CFR 1.17(m) was submitted.

With regard to Item (3), applicant's statement that "entire delay in filing the required reply from the due date for the reply until the filing of a grantable petition pursuant to this paragraph was unintentional" complies with 37 CFR 1.137(b)(3).

As to Item (4), the terminal disclaimer is not required since this application was filed after 08 June 1995.

A review of the application file reveals that, with the filing of the present petition and accompanying papers, a proper response has been submitted and all of the requirements of 37 CFR 1.137(b) for revival have been satisfied and revival is therefore appropriate.

CONCLUSION

The petition under 37 CFR 1.181 is **GRANTED**.

The petition under 37 CFR 1.137(b) is **GRANTED**.

The above-identified application has a receipt date of 23 July 2004.

This application is being forwarded to the United States Designated/Elected Office (US/DO/EO) for continued processing including the issuance of a Notification of Missing

Requirements (Form PCT/DO/EO/905) indicating that an oath or declaration along with the $65 surcharge for filing the oath or declaration after the thirty-month period is required.

Anthony Smith

Anthony Smith
Attorney-Advisor
Office of PCT Legal Administration
Tel: (571) 272-3298
Fax: (571) 273-0459

SPE RESPONSE FOR CERTIFICATE OF CORRECTION

Paper No.: —

DATE : 2/25/08

TO SPE OF : ART UNIT 2818

SUBJECT : Request for Certificate of Correction for Appl. No.: 10/521714 Patent No: 7161168 B2

A response is requested with respect to a request for a certificate of correction.

With respect to the change(s) requested to correct Office and/or Applicant's errors, should the patent read as shown in the certificate of correction attached herewith or the COCIN document(s), in IFW images for the above-identified patented application? No new matter should be introduced, nor should the scope or meaning of the claims be changed.

If the response is for an IFW, within 7 days, please complete and forward the response, to the employee (named below) via scanning into application images, using document code **COCX**.

If the response is for a paper file wrapper, please complete the response and forward the response with the paper file wrapper, to the employee (named below), within 7 days, to:

Certificates of Correction Branch (CofC)
South Tower - 9A22
Palm Location 7580

VIRGINIA TOLBERT
Certificates of Correction Branch
703-308-9390 ext. 113

Thank You For Your Assistance

The request for issuing the above-identified correction(s) is hereby:
Note your decision on the appropriate box.

- ☒ **Approved** — All changes apply.
- ☐ **Approved in Part** — Specify below which changes **do not** apply.
- ☐ **Denied** — State the reasons for denial below.

Comments: _____

Steven Loke
SPE

2818
Art Unit

UNITED STATES PATENT AND TRADEMARK OFFICE

UNITED STATES DEPARTMENT OF COMMERCE
United States Patent and Trademark Office
Address: COMMISSIONER FOR PATENTS
P.O. Box 1450
Alexandria, Virginia 22313-1450
www.uspto.gov

PARFOMAK, ANDREW N.
NORRIS MCLAUGHLIN & MARCUS PA
875 THIRD AVE, 8TH FLOOR
NEW YORK, NY 10022

Mail Date: 04/21/2010

Applicant	: Hans Rudolf Gygax	: DECISION ON REQUEST FOR
Patent Number	: 7601297	: RECALCULATION of PATENT
Issue Date	: 10/13/2009	: TERM ADJUSTMENT IN VIEW
Appliction No	: 10/521,716	: OF WYETH AND NOTICE OF INTENT TO
Filed	: 01/19/2005	: ISSUE CERTIFICATE OF CORRECTION
		:

The Request for Recalculation is **GRANTED** to the extent indicated.

The patent term adjustment has been determined to be **359** days. The USPTO will *sua sponte* issue a certificate of correction reflecting the amount of PTA days determined by the recalculation.

Prior to the issuance of the certificate of correction, the USPTO will afford patentee an opportunity to be heard and request reconsideration. Accordingly, patentee has **one month or thirty (30) days**, whichever is longer, to file a request for reconsideration of this patent term adjustment calculation. See 35 U.S.C. 154(b)(3)(B)(ii) and 37 CFR 1.322(a)(4). No extensions of time will be granted under 37 CFR 1.136.

Patentee should use document code PET.OP if electronically filing a request for reconsideration of this patent term adjustment calculation. The patentee must also include the information required by 37 CFR 1.705(b)(2) and the fee required by 37 CFR 1.18(e). If patentee does not file a timely request for reconsideration of this patent term adjustment calculation including the information required by 37 CFR 1.705(b)(2) and the fee required by 37 CFR 1.18(e), the USPTO will issue a certificate of correction reflecting the PTA determination noted above.

Patentee should be aware that in order to preserve the right to review in the United States District Court for the District of Columbia of the USPTO patent term adjustment determination, patentee must ensure that he or she also take the steps required under 35 U.S.C. 154(b)(4)(A) in a timely manner. Nothing in the request for recalculation should be construed as providing an alternative time frame for commencing a civil action under 35 U.S.C. 154(b)(4)(A).

Any questions concerning this decision should be directed to the Office of Patent Legal Administration at 571-272-7702.

UNITED STATES PATENT AND TRADEMARK OFFICE

Commissioner for Patents
United States Patent and Trademark Office
P.O. Box 1450
Alexandria, VA 22313-1450
www.uspto.gov

MILLIPORE CORPORATION
290 CONCORD ROAD
BILLERICA MA 01821

COPY MAILED

DEC 0 3 2009

OFFICE OF PETITIONS

In re Application of	:	
Robert John NOEL	:	
Application No. 10/521,730	:	DECISION ON PETITION
Filed: January 20, 2005	:	
Attorney Docket No. MCA-609 US	:	

This is a decision on the renewed petition under the unintentional provisions of 37 CFR 1.137(b), filed October 02, 2009, to revive the above-identified application.

The petition is **GRANTED**.

The application became abandoned for failure to reply in a timely manner to the non-final Office action mailed, September 11, 2008, which set a shortened statutory period for reply of three (3) month. No extensions of time under the provisions of 37 CFR 1.136(a) were obtained. Accordingly, the application became abandoned on December 12, 2008.

The petition satisfies the requirements of 37 CFR 1.137(b) in that petitioner has supplied (1) the reply in the form of an amendment; (2) the petition fee of $1,620.00; and (3) a proper statement of unintentional delay. Accordingly, the reply to the non-final Office action of September 11, 2008 is accepted as having been unintentionally delayed.

Telephone inquiries concerning this decision should be directed to the undersigned at (571) 272- 4231.

The application file is being referred to Technology Center AU 1644 for appropriate action on the concurrently filed amendment.

Michelle R. Eason
Paralegal Specialist
Office of Petitions

UNITED STATES PATENT AND TRADEMARK OFFICE

UNITED STATES DEPARTMENT OF COMMERCE
United States Patent and Trademark Office
Address: COMMISSIONER FOR PATENTS
P.O. Box 1450
Alexandria, Virginia 22313-1450
www.uspto.gov

Haynes and Boone, LLP
IP Section
2323 Victory Avenue
SUITE 700
Dallas, TX 75219

Mail Date: 04/21/2010

Applicant	: Craig B. Gentry	: DECISION ON REQUEST FOR
Patent Number	: 7657748	: RECALCULATION of PATENT
Issue Date	: 02/02/2010	: TERM ADJUSTMENT IN VIEW
Appliction No	: 10/521,741	: OF WYETH AND NOTICE OF INTENT TO
Filed	: 01/18/2005	: ISSUE CERTIFICATE OF CORRECTION
		:

The Request for Recalculation is **GRANTED** to the extent indicated.

The patent term adjustment has been determined to be **1362** days. The USPTO will *sua sponte* issue a certificate of correction reflecting the amount of PTA days determined by the recalculation.

Prior to the issuance of the certificate of correction, the USPTO will afford patentee an opportunity to be heard and request reconsideration. Accordingly, patentee has **one month or thirty (30) days**, whichever is longer, to file a request for reconsideration of this patent term adjustment calculation. See 35 U.S.C. 154(b)(3)(B)(ii) and 37 CFR 1.322(a)(4). No extensions of time will be granted under 37 CFR 1.136.

Patentee should use document code PET.OP if electronically filing a request for reconsideration of this patent term adjustment calculation. The patentee must also include the information required by 37 CFR 1.705(b)(2) and the fee required by 37 CFR 1.18(e). If patentee does not file a timely request for reconsideration of this patent term adjustment calculation including the information required by 37 CFR 1.705(b)(2) and the fee required by 37 CFR 1.18(e), the USPTO will issue a certificate of correction reflecting the PTA determination noted above.

Patentee should be aware that in order to preserve the right to review in the United States District Court for the District of Columbia of the USPTO patent term adjustment determination, patentee must ensure that he or she also take the steps required under 35 U.S.C. 154(b)(4)(A) in a timely manner. Nothing in the request for recalculation should be construed as providing an alternative time frame for commencing a civil action under 35 U.S.C. 154(b)(4)(A).

Any questions concerning this decision should be directed to the Office of Patent Legal Administration at 571-272-7702.

UNITED STATES PATENT AND TRADEMARK OFFICE

UNITED STATES DEPARTMENT OF COMMERCE
United States Patent and Trademark Office
Address: COMMISSIONER FOR PATENTS
P.O. Box 1450
Alexandria, Virginia 22313-1450
www.uspto.gov

Haynes and Boone, LLP
IP Section
2323 Victory Avenue
SUITE 700
Dallas, TX 75219

Mail Date: 05/18/2010

Applicant : Craig B. Gentry
Patent Number : 7657748
Issue Date : 02/02/2010
Application No : 10/521,741
Filed : 01/18/2005

: NOTICE CONCERNING IMPROPER
: CALCULATION OF PATENT TERM
: ADJUSTMENT BASED UPON USPTO
: IMPROPERLY MEASURING REDUCTION
: PERIOD UNDER 37 CFR 1.704(c)(10).

The United States Patent and Trademark Office (USPTO) discovered that in processing the recent recalculation decisions mailed in response to patentee's filed Request for Recalculation of Patent Term Adjustment in view of Wyeth, the USPTO improperly measured the reduction period for reductions under 37 CFR 1.704(c)(10). Pursuant to 37 CFR 1.704(c)(10), patentee's reduction begins on the date of filing the amendment under 37 CFR 1.312 ("1.312 amendment") or other related paper and ends on the date that the Office mails a response to the filing of the 1.312 amendment or other paper. It has been discovered that during the recalculation, the calculation failed to the limit the reduction to the mail date of the response to the 1.312 amendment or other paper. Accordingly, patentee's reductions were greater than warranted.

This notice **VACATES** the previous GRANTED request for recalculation and provides patentee with a revised GRANTED recalculation.

The patent term adjustment has been determined to be **1404** days. The USPTO will *sua sponte* issue a certificate of correction reflecting the amount of patent term adjustment (PTA) days determined by the recalculation.

Prior to the issuance of the certificate of correction, the USPTO will afford patentee an opportunity to be heard and request reconsideration. Accordingly, patentee has **one month or thirty (30) days** from the mail date of this notice, whichever is longer, to file a request for reconsideration of this PTA calculation. See 35 U.S.C. § 154(b)(3)(B)(ii) and 37 CFR 1.322(a)(4).

Patentee should use document code PET.OP if electronically filing a request for reconsideration of this PTA calculation. The patentee must also include the information required by 37 CFR 1.705(b)(2), and the fee required by 37 CFR 1.18(e). If patentee does not file a timely request for reconsideration of this PTA calculation, including the information required by 37 CFR 1.705(b)(2) and the fee required by 37 CFR 1.18(e), the USPTO will issue a certificate of correction reflecting the PTA determination noted above.

Patentee should be aware that in order to preserve the right of review of the USPTO's PTA determination in the United States District Court for the District of Columbia, patentee must ensure that the steps required under 35 U.S.C. § 154 (b)(4) are taken in a timely manner. Nothing in the request for recalculation should be construed as providing an alternative time frame for commencing a civil action under 35 U.S.C. § 154(b)(4).

UNITED STATES PATENT AND TRADEMARK OFFICE

COMMISSIONER FOR PATENTS
UNITED STATES PATENT AND TRADEMARK OFFICE
P.O. BOX 1450
ALEXANDRIA, VA 22313-1450
www.uspto.gov

22 MAR 2007

Burns Doane, Swecker & Mathis, LLP
PO Box 1404
Alexandria, VA 22313-1404

In re Application of	:	
STITOU et al	:	
Application No.: 10/521,760	:	
PCT No.: PCT/FR03/02218	:	
Int. Filing Date: 11 July 2003	:	DECISION
Priority Date: 24 July 2002	:	
Atty. Docket No.: 032013-113	:	
For: METHOD FOR PRODUCING	:	
COLD AND INSTALLATION THEREOF	:	

This application is before the Office of PCT Legal Administration for consideration of matters under 35 USC 371, and specifically for consideration of the declarations filed in the U.S. Patent and Trademark Office (USPTO) on 16 September 2005, and 03 February 2006, and of applicants' "STATEMENT FURTHER TO EXECUTED DECLARATION" filed on 23 June 2006, which have together been treated as a request for acceptance of the application under 37 CFR 1.42 and 1.497(b)(2) as being filed on behalf of a deceased co-inventor. The request is **GRANTED** as discussed below.

A review of the application file reveals that the declarations filed on 16 September 2005, and 03 February 2006, when considered together and in combination with the statement filed 23 June 2006, satisfy the requirements of 37 CFR 1.42 and 37 CFR 1.497(b)(2).

A review of the application file also reveals that on 11 January 2006, the USPTO prematurely issued a Notice Of Acceptance Of Application (Form PCT/DO/EO/903). The notice is hereby **VACATED**.

The application has an international filing date of 11 July 2003, under 35 U.S.C. 363, and a 35 U.S.C. 371(c) date of **03 February 2006**.

This application is being returned to the National Stage Processing Branch of the International Division for further processing in accordance with this decision, and specifically for the issuance of a corrected Form PCT/DO/EO/903.

Richard R. Cole
PCT Legal Examiner
Office of PCT Legal Administration

(571) 272-3281
Fax: (571) 273-0459

UNITED STATES PATENT AND TRADEMARK OFFICE

COMMISSIONER FOR PATENTS
UNITED STATES PATENT AND TRADEMARK OFFICE
P.O. BOX 1450
ALEXANDRIA, VA 22313-1450
www.uspto.gov

OBLON, SPIVAK, MCCLELLAND MAIER & NEUSTADT, P.C.
1940 DUKE STREET
ALEXANDRIA, VA 22314

COPY MAILED
MAR 20 2008

In re Application of	:	
Syoichi Ichihashi	:	
Application No.: 10/521,794	:	ON PETITION
Filed: January 21, 2005	:	
Attorney Docket No.: 264832US0PCT	:	

This is a decision on the petition, filed March 18, 2008, under 37 CFR 1.313(c)(2) to withdraw the above-identified application from issue after payment of the issue fee.

The petition is **GRANTED**.

The above-identified application is withdrawn from issue for consideration of a submission under 37 CFR 1.114 (request for continued examination). See 37 CFR 1.313(c)(2).

Petitioner is advised that the issue fee paid on February 27, 2008, cannot be refunded. If, however, the above-identified application is again allowed, petitioner may request that it be applied towards the issue fee required by the new Notice of Allowance. [1]

Telephone inquiries relating to this decision should be directed to the undersigned at (571) 272-3204.

The application is being referred to Technology Center AU 1661 for further processing of the request for continued examination under 37 CFR 1.114 and for consideration of the concurrently filed Information Disclosure Statement (IDS).

Sherry D. Brinkley
Petitions Examiner
Office of Petitions

[1] *The request to apply the issue fee to the new Notice may be satisfied by completing and returning the new Part B – Fee(s) Transmittal Form (along with any balance due at the time of submission). Petitioner is advised that the Issue Fee Transmittal Form must be completed and timely submitted to avoid abandonment of the application.*

UNITED STATES PATENT AND TRADEMARK OFFICE

Commissioner for Patents
United States Patent and Trademark Office
P.O. Box 1450
Alexandria, VA 22313-1450
www.uspto.gov

COPY MAILED

SEP 29 2009

OFFICE OF PETITIONS

Oblon, Spivak, McClelland
Maier & Neustadt, LLP
1940 Duke St.
Alexandria, VA 22314

In re Patent No. 7, 524,967	:	
Koyakumaru, et al.	:	ON RECONSIDERATION OF
Issue Date: April, 28 2009	:	PATENT TERM ADJUSTMENT
Application No. 10/521,800	:	UNDER 37 CFR 1.705(d)
Filing or 371(c) Date: August 2, 2005	:	
Attorney Docket No. 264837US0XPCT	:	

This is a decision on the "PETITION UNDER 37 C.F.R. §1.705(d) AND REQUEST FOR RECONSIDERATION OF PATENT TERM ADJUSTMENT," filed June 22, 2009, requesting that the patent term adjustment determination for the above-identified patent be changed from 627 days to 896 days. This mater is properly treated as an application for patent term adjustment pursuant to 37 C.F.R. § 1.705(d).

The request for reconsideration is granted to the extent that the determination has been reconsidered; however, the request for reconsideration of patent term adjustment is **DISMISSED** with respect to making any change in the patent term adjustment determination under 35 USC 154(b) of 627 days.

On April 28, 2009, the above-identified application matured into U.S. Patent No. 7, 524,967 with a patent term adjustment of 627 days.

This application for patent term adjustment was timely filed within two months of the issue date of the patent. See 37 CFR 1.705(d).

The Office acknowledges submission of the $200.00 fee set forth in 37 CFR 1.18(e). No additional fees are required.

Patentees request recalculation of the patent term adjustment based on the decision in *Wyeth v. Dudas*, 580 F. Supp. 2d 138, 88 U.S.P.Q. 2d 1538 (D.D.C. 2008). Patentees assert that pursuant to *Wyeth*, the PTO delay under §154(b)(1)(A) overlaps with a delay under §154(b)(1)(B) only if the delays "occur on the same day." Patentees maintain that the period of adjustment pursuant to 37 CFR § 1.702(b), of 269 days and the period of adjustment due to examination delay, pursuant to 37 CFR §1.702(a), of 627 days do not overlap as these periods do not occur on the same day.

Patentees argue that the period of adjustment due to the Three Year Delay by the Office, pursuant to 37 CFR § 1.702(b), is 269 days. Patentees calculate this period as the number of days in the period beginning on the day after the date that is three years after the date on which the national stage commenced under 35 USC 371(c) in an international application, August 2, 2005, and ending on the date that the patent issued, April 28, 2009.

Patentees assert that in addition to the three year delay period, they are entitled to a period of adjustment due to examination delay, pursuant to 37 CFR § 1.702(a)(1) of 627 days for failure by the Office to mail at least one of a notification under 35 USC 132 not later than 14 months after the date the application fulfilled the requirements of 35 USC 371.

Thus, patentees assert entitlement to an adjustment of 896 days (627 days of delay pursuant to 37 CFR 1.702(a) *plus* 269 days of delay pursuant to 37 CFR 1.702(b) *less* zero overlapping days *less* zero days of applicant delay).

Under 37 CFR 1.703(f), patentees are entitled to a period of patent term adjustment equal to the period of delays based on the grounds set forth in 37 CFR 1.702 reduced by the period of time equal to the period of time during which patentees failed to engage in reasonable efforts to conclude prosecution pursuant to 37 CFR 1.704. In other words, patentees are entitled to the period of Office delay reduced by the period of applicant delay.

A review of the record reveals that Patentee's have incorrectly calculated the period of adjustment under 35 U.S.C. 154(b)(1)(B) and 37 CFR 1.702(b) for failing to issue the patent within three years of the 'actual filing date' of the application. The period of adjustment under 35 U.S.C. 154(b)(1)(B) and 37 CFR 1.702(b) is the number of days in the period beginning on the day after the date that is three years after the date on which the national stage commenced under 35 U.S.C. 371(b) or (f). See, MPEP § 2730. The commencement date is the date 30 months from the earliest priority date claimed in the international application[1]. In this application, the earliest priority date claimed, as shown on the Notice of Acceptance of Application Under 35 U.S.C. § 371 and 37 CFR 1.495, mailed July 19, 2005, is July 23, 2002. Accordingly, the commencement date is January 23, 2005, and the period of adjustment pursuant to 37 CFR 1.703(b) began January 24, 2008, the day after the date that is three years after the date on which the national stage commenced under 35 U.S.C. 371(b), and ended April 28, 2009, the date that the patent issued, or 461 days.

The Office asserts that as of the time of issuance of the patent, the application was pending three years and 461 days. The Office asserts that certain action was not taken within the specified time frame, and thus, the entry of a period of adjustment of 627 days is correct. At issue is whether patentees should accrue an additional 461 days of patent term adjustment for the Office taking in

[1] The commencement date may be earlier than 30 months where (1) an applicant expressly requested early commencement, and completed all requirements under 35 U.S.C. 371(c) prior to 30 months from the earliest priority date, or (2) Demand was timely filed requesting a change in commencement from 20 to 30 months. Neither is applicable here.

excess of three years to issue the patent, as well as 627 days for Office failure to take a certain action within a specified time frame (or examination delay).

The Office contends that the period of 461 days of adjustment pursuant to 37 CFR 1.702(b) overlaps with the period of adjustment of 627 days pursuant to 37 CFR 1.702(a). Patentees' calculation of the period of overlap is inconsistent with the Office's interpretation of this provision. 35 U.S.C. 154(b)(2)(A) limits the adjustment of patent term, as follows:

> To the extent that the periods of delay attributable to grounds specified in paragraph (1) overlap, the period of any adjustment granted under this subsection shall not exceed the actual number of days the issuance of the patent was delayed.

Likewise, 35 CFR 1.703(f) provides that:

> To the extent that periods of delay attributable to the grounds specified in § 1.702 overlap, the period of adjustment granted under this section shall not exceed the actual number of days the issuance of the patent was delayed.

As explained in *Explanation of 37 CFR 1.703(f) and of the United States Patent and Trademark Office Interpretation of 35 U.S.C. 154(b)(2)(A)*, 69 Fed. Reg. 34283 (June 21, 2004), the Office interprets 35 U.S.C. 154(b)(2)(A) as permitting either patent term adjustment under 35 U.S.C. 154(b)(1)(A)(i)-(iv), or patent term adjustment under 35 U.S.C. 154(b)(1)(B), but not as permitting patent term adjustment under both 35 U.S.C. 154(b)(1)(A)(i)-(iv) and 154(b)(1)(B). Accordingly, the Office implements the overlap provision as follows:

> If an application is entitled to an adjustment under 35 U.S.C. 154(b)(1)(B), the entire period during which the application was pending (except for periods excluded under 35 U.S.C. 154(b)(1)(B)(i)-(iii)), and not just the period beginning three years after the actual filing date of the application, is the period of delay under 35 U.S.C. 154(b)(1)(B) in determining whether periods of delay overlap under 35 U.S.C. 154(b)(2)(A). Thus, any days of delay for Office issuance of the patent more than 3 years after the filing date of the application, which overlap with the days of patent term adjustment accorded prior to the issuance of the patent will not result in any additional patent term adjustment. See 35 U.S.C. 154(b)(1)(B), 35 U.S.C. 154(b)(2)(A), and 37 CFR § 1.703(f). See *Changes to Implement Patent Term Adjustment Under Twenty Year Term; Final Rule*, 65 Fed. Reg. 56366 (Sept. 18, 2000). See also *Revision of Patent Term Extension and Patent Term Adjustment Provisions; Final Rule*, 69 Fed. Reg. 21704 (April 22, 2004), 1282 Off. Gaz. Pat. Office 100 (May 18, 2004). See also *Explanation of 37 CFR 1.703(f) and of the United States Patent and Trademark Office Interpretation of 35 U.S.C. 154(b)(2)(A)*, 69 Fed. Reg. 34283 (June 21, 2004).

The current wording of § 1.703(f) was revised in response to the misinterpretation of this provision by a number of Patentees. The rule was slightly revised to more closely track the corresponding language of 35 U.S.C. 154(b)(2)(A). The relevant portion differs only to the

extent that the statute refers back to provisions of the statute whereas the rule refers back to sections of the rule. This was not a substantive change to the rule nor did it reflect a change of the Office's interpretation of 35 U.S.C. 154(b)(2)(A). As stated in the *Explanation of 37 CFR 1.703(f) and of the United States Patent and Trademark Office Interpretation of 35 U.S.C. 154(b)(2)(A)*, the Office has consistently taken the position that if an application is entitled to an adjustment under the three-year pendency provision of 35 U.S.C. 154(b)(1)(B), the entire period during which the application was pending before the Office (except for periods excluded under 35 U.S.C. 154(b)(1)(B)(i)-(iii)), and not just the period beginning three years after the actual filing date of the application, is the relevant period under 35 U.S.C. 154(b)(1)(B) in determining whether periods of delay "overlap" under 35 U.S.C. 154(b)(2)(A).

This interpretation is consistent with the statute. Taken together the statute and rule provide that to the extent that periods of delay attributable to grounds specified in 35 U.S.C. 154(b)(1) and in corresponding § 1.702 overlap, the period of adjustment granted shall not exceed the actual number of days the issuance of the patent was delayed. The grounds specified in these sections cover the A) guarantee of prompt Patent and Trademark Office responses, B) guarantee of no more than 3-year application pendency, and C) guarantee or adjustments for delays due to interference, secrecy orders and appeals. A section by section analysis of 35 U.S.C. 154(b)(2)(A) specifically provides that:

> Section 4402 imposes limitations on restoration of term. In general, pursuant to [35 U.S.C.] 154(b)(2)(A)-(C), total adjustments granted for restorations under [35 U.S.C. 154](b)(1) are reduced as follows: (1) To the extent that there are multiple grounds for extending the term of a patent that may exist simultaneously (e.g., delay due to a secrecy order under [35 U.S.C.] 181 and administrative delay under [35 U.S.C.] 154(b)(1)(A)), the term should not be extended for each ground of delay but only for the actual number of days that the issuance of a patent was delayed; See 145 Cong. Rec. S14,718[2]

As such, the period for over three-year pendency does not overlap only to the extent that the actual dates in the period beginning three years after the date on which the application was filed overlap with the actual dates in the periods for failure of the Office to take action within specified time frames. In other words, consideration of the overlap does not begin three years after the commencement date of the application.

In this instance, the relevant period under 35 U.S.C. 154(b)(1)(B) in determining whether periods of delay "overlap" under 35 U.S.C. 154(b)(2)(A) is the entire period during which the application was pending before the Office, August 2, 2005, to the date the patent issued, April 28, 2009. Prior to the issuance of the patent, 627 days of patent term adjustment were accorded for the Office failing to respond within a specified time frame during the pendency of the application. All of the 461 days for Office delay in issuing the patent overlap with the 627 days

[2] The AIPA is title IV of the Intellectual Property and Communications Omnibus Reform Act of 1999 (S. 1948), which was incorporated and enacted as law as part of Pub. L. 106-113. The Conference Report for H.R. 3194, 106th Cong. 1st Sess. (1999), which resulted in Pub. L. 106-113, does not contain any discussion (other than the incorporated language) of S. 1948. A section-by-section analysis of S. 1948, however, was printed in the Congressional Record at the request of Senator Lott, See 145 Cong. Rec. S14,708-26 (1999)(daily ed. Nov. 17, 1999).

of examination delay. During that time, the issuance of the patent was delayed by 627 days, not 627 days and 461 days. The Office took 14 months and 627 days to issue a first Office action. Otherwise, the Office took all actions set forth in 37 CFR 1.702(a) within the prescribed timeframes. Nonetheless, given the initial 627 days of Office delay and the time allowed within the timeframes for processing and examination, the patent issued three years and 461 days after its commencement date. However, the Office did not delay 627 days and also delay an additional 461 days. Accordingly, 627 days of patent term adjustment was properly entered since the period of delay of 461 days attributable to the delay in the issuance of the patent overlaps with the adjustment of 627 days attributable to grounds specified in § 1.702(a). Entry of both periods is not warranted given the entire 461 days overlapped.

In view thereof, no adjustment to the patent term will be made.

The Office acknowledges submission of the $200.00 fee set forth in 37 CFR 1.18(e). No additional fees are required.

Telephone inquiries specific to this matter should be directed to Senior Petitions Attorney Shirene Willis Brantley, at (571) 272-3230.

Alesia Brown
Senior Petitions Attorney
Office of Petitions
Office of the Deputy Commissioner
for Patent Examination Policy

02 AUG 2005

#5

UNITED STATES PATENT AND TRADEMARK OFFICE

COMMISSIONER FOR PATENTS
UNITED STATES PATENT AND TRADEMARK OFFICE
P.O. BOX 1450
ALEXANDRIA, VA 22313-1450
www.uspto.gov

Larry S. Nixon
Nixon & Vanderhye
1100 North Glebe Road, 8th Floor
Arlington, VA 22201-4714

In re Application of	:	
HAWKES, Michael	:	
Application No.: 10/521,812	:	DECISION ON PETITION
PCT No.: PCT/GB03/00083	:	UNDER 37 CFR 1.137(b)
Int. Filing Date: 13 January 2003	:	
Priority Date: 16 January 2002	:	
Attorney Docket No.: 1483-31	:	
For: SECURE MESSAGING VIA MOBILE COMMUNICATIONS NETWORK		

The petition to revive under 37 CFR 1.137(b) filed 21 January 2005 in the above-captioned application is hereby **GRANTED** as follows:

Applicant's statement that "the entire delay in filing the required reply from the due date for the reply until the filing of a grantable petition under 37 CFR 1.137(b) was unintentional" meets the requirements of 37 CFR 1.137(b)(3).

A review of the application file reveals that applicant has submitted the basic national fee and the requirements of 37 CFR 1.137(b) have been satisfied. Therefore, the request to revive the application abandoned under 35 U.S.C. 371(d) is granted as to the National stage in the United States of America.

Deposit Account No. 14-1140 has been charged a $65.00 surcharge fee under 37 CFR 492(e) for supplying an oath or declaration later than 30 months from the earliest claimed priority date.

This application is being returned to the United States Designated/Elected Office for processing in accordance with this decision.

Anthony Smith

Anthony Smith
Attorney-Advisor
Office of PCT Legal Administration
Tel.: 571-272-3298
Facsimile: 571-273-0459

11 APR 2006

UNITED STATES PATENT AND TRADEMARK OFFICE

4/11/2006 #5

Commissioner for Patents
United States Patent and Trademark Office
P.O. Box 1450
Alexandria, VA 22313-1450
www.uspto.gov

ROTHWELL, FIGG, ERNST & MANBECK, P.C.
1425 K Street, NW
Suite 800
Washington, D.C. 20005

In re Application of:	:	
PATEL, Bipin, C., M.	:	DECISION ON PETITION UNDER
U.S. Application No.: 10/521,814	:	37 CFR 1.47(b) AND PETITION
PCT No.: PCT/GB2003/002919	:	UNDER 37 CFR 1.59(b)
International Filing Date: 04 July 2003	:	
Priority Date: 22 July 2002	:	
Attorney's Docket No.: 1768-134	:	
For: NEW ANTI-CANCER	:	
COMPOUNDS	:	

This decision is issued in response to the "Petition For Filing A Patent Application By Other Than The Inventor Pursuant To 37 CFR 1.47(b)" and the "Petition For Expungement Of Information Or Copy Of Papers In Application File Pursuant To 37 CFR 1.59(b)" filed 27 January 2006. Applicant has submitted the required petition fees.

BACKGROUND

On 04 July 2003, applicant filed international application PCT/GB2003/002919. The application claimed a priority date of 22 July 2002 and designated the United States. On 29 January 2004, the International Bureau (IB) communicated a copy of the international application to the United States Patent and Trademark Office (USPTO). The deadline for submission of the basic national fee was thirty months from the priority date, i.e., 22 January 2005.

On 21 January 2005, petitioner filed a Transmittal Letter for entry into the national stage in the United States accompanied by, among other materials, payment of the basic national fee.

On 18 July 2005, the United States Designated/Elected Office (DO/EO/US) mailed a Notification Of Missing Requirements (Form PCT/DO/EO/905) indicating that an executed oath or declaration acceptable under 37 CFR 1.497, the surcharge for filing the declaration later than thirty months after the priority date, additional claims fees and sequence listing materials were required.

On 17 January 2006, petitioner filed a response to the Notification Of Missing Requirements (with required extension fee). The response included the required sequence listing materials, a preliminary amendment, payment of the surcharge for filing the declaration later than thirty months after priority date, and the petition considered herein. The petition seeks

acceptance of the application without the signature of the sole inventor, whom petitioner states is unavailable to execute the application papers.

DISCUSSION

1. Petition Under 37 CFR 1.47(b):

A grantable petition under 37 CFR 1.47(b) must be accompanied by: (1) the fee under 37 CFR 1.17; (2) factual proof that the inventor refuses to execute the application or cannot be reached after diligent effort; (3) a statement of the last known address of the nonsigning inventor; (4) an oath or declaration by the 37 CFR 1.47(b) applicant on behalf of and as agent for the nonsigning inventor; (5) proof of proprietary interest in the application: and (6) a showing that such action is necessary to preserve the rights of the parties or to prevent irreparable damages. The present petition satisfies items (1), (3), (4), and (6).

Regarding item (1), petitioner has authorized a charge to Deposit Account No. 03-1952 for the required petition fee ($200). Based on this authorization, item (1) is satisfied.

Regarding item (2), where it is asserted that the inventor has refused to execute the application papers, section 409.03(d) of the MPEP states that a "copy of the application papers should be sent to the last known address of the nonsigning inventor, or, if the nonsigning inventor is represented by counsel, to the address of the nonsigning inventor's attorney." The MPEP also requires "a statement of facts by the person who presented the inventor with the application papers and/or to whom the refusal was made." Here, petitioner has provided a declaration by Tristan Brittain-Dissont, with accompanying exhibits. This declaration refers to (and includes a copy of) a letter dated 29 March 2005 to the nonsigning inventor from an attorney for the 37 CFR 47(b) applicant Psimei Pharmaceuticals plc. (herinafter "Psimei"). This letter requests the inventor's signature on an enclosed declaration; it does not state that a copy of the complete application papers was enclosed. Mr. Brittain-Dissont's declaration also refers to (and includes copies of) subsequent correspondence between attorneys for Psimei and attorneys for the nonsigning inventor. This correspondence refers to difficulties between the nonsigning inventor and Psimei, but neither the declaration nor the attached materials include first hand evidence demonstrating that a copy of the complete application papers, with a request for the inventor's signature, has been sent to the inventor's attorney, as required before it can be concluded that the inventor has refused to execute the application. It is also noted that the correspondence referred to in the declaration involved attorneys for Psimei, not Mr. Brittain-Dissont himself. Accordingly, Mr. Brittain-Dissont is not the proper person to provide a first hand statement regarding this correspondence.

Petitioner must provide an acceptable statement from a person with first hand knowledge of the efforts made to obtain the signature of the nonsigning inventor. Such materials must demonstrate that a copy of the complete application papers, with a request for the inventor's signature, has been sent to the inventor's attorney, and that the inventor has refused to execute the required declaration. Until such materials are provided, item (2) is not considered satisfied.

Regarding item (3), the petition includes an express statement of the last known address of the nonsigning inventor. Item (3) is satisfied.

Regarding item (4), the petition includes a declaration executed on behalf of the nonsigning inventor by the 37 CFR 1.47(b) applicant, Psimei (specifically, the declaration was executed by Tristan Brittain-Dissont as Director of Psimei). Item (4) is satisfied.

Regarding item (5), section 409.03(f) of the MPEP states the following:

> When an application is deposited pursuant to 37 CFR 1.47(b), the 37 CFR 1.47(b) applicant must prove that: (A) the invention has been assigned to the applicant, or (B) the inventor has agreed in writing to assign the invention to the applicant, or (C) the applicant otherwise has sufficient proprietary interest in the subject matter to justify the filing of the application.

In the declaration of Tristan Brittain-Dissont, petitioner asserts a proprietary interest based on an employment agreement and under the applicable laws of the United Kingdom. The MPEP states the following with respect to an agreement in writing to assign an invention:

> When an inventor has agreed in writing to assign an invention described in an application deposited pursuant to 37 CFR 1.47(b), a copy of that agreement should be submitted. If an agreement to assign is dependent on certain specified conditions being met, it must be established by a statement of facts by someone with first hand knowledge of the circumstances in which those conditions have been met. A typical agreement to assign is an employment agreement where an employee (nonsigning inventor) agrees to assign to his or her employer (37 CFR 1.47(b) applicant) all inventions made during employment. When such an agreement is relied on, it must be established by a statement of a person having firsthand knowledge of the facts that the invention was made by the employee while employed by the 37 CFR 1.47(b) applicant.

Here, Mr. Brittain-Dissont states that the invention underlying the present application was made during the inventor's employment at Psimei, and a copy of the employment agreement has been provided. However, Mr. Brittain-Dissont does not state that he has the required first hand knowledge regarding whether the invention herein was made while the inventor was employed at Psimei, and the copy of the employment agreement provided is not fully legible (for example, the section regarding intellectual property rights cannot be read in full). Accordingly, the present record does not satisfy the requirements for demonstrating a proprietary interest pursuant to the inventor's employment agreement. Before these requirements can be considered satisfied, applicant must provide: (1) confirmation that Mr. Brittain-Dissont has the required first hand knowledge regarding the making of the invention (or a statement from a person who has such first hand knowledge); and (2) a legible copy of the employment agreement.

As for applicant's additional assertion that Psimei has a proprietary right to the invention based on the operation of the law of the United Kingdom, pursuant to MPEP section 409.03(f), a showing of such a proprietary interest requires the following:

> an appropriate legal memorandum to the effect that a court of competent jurisdiction (federal, state, or foreign) would by the weight of authority in that jurisdiction award title of the invention to the 37 CFR 1.47(b) applicant. The facts in support of any conclusion that a court would award title to the 37 CFR 1.47(b) applicant should be made of record by way of an affidavit or declaration of the person having firsthand knowledge of same. The legal memorandum should be prepared and signed by an attorney at law familiar with the law of the jurisdiction involved. A copy (in the English language) of a statute (if other than the United States statute) or a court decision (if other than a reported decision of a federal court or a decision reported in the United States Patents Quarterly) relied on to demonstrate a proprietary interest should be made of record.

Petitioner has not supplied such a memorandum of law. Accordingly, the present record does not support a conclusion that petitioner is entitled to a proprietary interest in the present invention under the operation of the applicable law.

Based on the above, item (5) of a grantable petition (i.e., proof of proprietary interest in the application) is not satisfied on the present record.

Regarding item (6), Mr. Brittain-Dissont has made the required statement that granting of the present petition is necessary to preserve the rights of Psimei. Item (6) is satisfied.

Based on the above, petitioner has failed to satisfy all the requirements for a grantable petition.

2. <u>Petition Under 37 CFR 1.59(b)</u>:

Petitioner has requested that, pursuant to 37 CFR 1.59(b), the declaration of Mr. Brittain-Dissont, and the exhibits thereto, be expunged from the file of the present application. Petitioner asserts that this is necessary in order to protect the privacy of the inventor and Psimei. As stated in the petition under 37 CFR 1.47(b), these materials were submitted by petitioner pursuant to MPEP section 724.02.

A determination on the petition under 37 CFR 1.59(b) will be held in abeyance pending a final determination on the petition under 37 CFR 1.47(b).

<u>CONCLUSION</u>

The petition under 37 CFR 1.47(b) is **DISMISSED** without prejudice.

If reconsideration on the merits of the petition is desired, a proper response must be filed within **TWO (2) MONTHS** of the mail date of the present decision. Any request for reconsideration should include a cover letter entitled "Renewed Petition Under 37 CFR 1.47(b)" and must include the materials required to satisfy items (2) and (5) of a grantable petition, as discussed above and in the applicable sections of the MPEP.

Failure to provide a proper and timely response will result in abandonment of the application. Extensions of time are available under 37 CFR 1.136(a).

The petition under 37 CFR 1.59(b) is **HELD IN ABEYANCE**.

Please direct further correspondence with respect to this matter to Mail Stop PCT, Commissioner for Patents, Office of PCT Legal Administration, P.O. Box 1450, Alexandria, Virginia 22313-1450, with the contents of the letter marked to the attention of the Office of PCT Legal Administration.

Richard M. Ross
Attorney Advisor
Office of PCT Legal Administration
Telephone: (571) 272-3296
Facsimile: (571) 273- 0459

03 JUL 2007

UNITED STATES PATENT AND TRADEMARK OFFICE.

Commissioner for Patents
United States Patent and Trademark Office
P.O. Box 1450
Alexandria, VA 22313-1450
www.uspto.gov

ROTHWELL, FIGG, ERNST & MANBECK, P.C.
1425 K Street, NW
Suite 800
Washington, D.C. 20005

In re Application of: PATEL, Bipin, C., M.	:	
U.S. Application No.: 10/521,814	:	DECISION ON RENEWED
PCT No.: PCT/GB2003/002919	:	PETITIONS UNDER
International Filing Date: 04 July 2003	:	37 CFR 1.47(b) AND
Priority Date: 22 July 2002	:	37 CFR 1.59(b)
Attorney's Docket No.: 1768-134	:	
For: CONJUGATES OF N-	:	
HYDROXYPROPYMETHACRYL-	:	
AMIDE-METHACRYLATE ...	:	

This decision is issued in response to the "Request For Reconsideration Of Petition For Filing A Patent Application By Other Than The Inventor Pursuant To 37 CFR 1.47(b)" and the "Letter Regarding Previously Filed Petition To Expunge Pursuant To 37 CFR 1.59(b)" filed 11 August 2006, and the "Supplemental Petition for Expungement.." filed 22 June 2007. No additional petition fees are required.

BACKGROUND

The procedural background for the present application was set forth in the decision mailed by this Office on 11 April 2006. In that decision, applicant's "Petition For Filing A Patent Application By Other Than The Inventor Pursuant To 37 CFR 1.47(b)" under 37 CFR 1.47(b) filed 27 January 2006 was dismissed without prejudice for failure to satisfy all the requirements for a grantable petition. The 11 April 2006 decision also stated that the "Petition For Expungement Of Information Or Copy Of Papers In Application File Pursuant To 37 CFR 1.59(b)" filed 27 January 2006 would be held in abeyance pending a final determination on the petition under 37 CFR 1.47(b).

On 11 August 2006, applicant filed the "Request For Reconsideration Of Petition For Filing A Patent Application By Other Than The Inventor Pursuant To 37 CFR 1.47(b)" and the "Letter Regarding Previously Filed Petition To Expunge Pursuant To 37 CFR 1.59(b) considered herein (Deposit Account No. 02-2135 will be charged the required two-month extension fee).

On 22 June 2007, applicant filed a supplemental petition under 37 CFR 1.59(b).

DISCUSSION

1. Renewed Petition Under 37 CFR 1.47(b)

The 11 August 2006 submission included a declaration in compliance with 37 CFR 1.497 executed by the previously non-signing sole inventor, Bipin C. M. PATEL. As this inventor had been the subject of the original petition under 37 CFR 1.47(b), such petition is no longer necessary. The petition under 37 CFR 1.47(b) is therefore appropriately dismissed as moot.

2. Renewed Petition To Expunge Under 37 CFR 1.59(b)

The "Letter Regarding Previously Filed Petition To Expunge Pursuant To 37 CFR 1.59(b)" filed 11 August 2006, and supplemented on 22 June 2007, is treated herein as a renewed petition to expunge under 37 CFR 1.59(b).

The petition is granted.

Petitioner requests that a document entitled "Declaration by Tristan Brittain-Dissont" (with accompanying exhibits) filed 17 January 2006, be expunged from the record. Petitioner states that either (A) that the information contains trade secret material, proprietary material and/or material that is subject to a protective order which has not been made public; or (B) that the information submitted was unintentionally submitted and the failure to obtain its return would cause irreparable harm to the party who submitted the information or to the party in interest on whose behalf the information was submitted, and the information has not otherwise been made public. The petition fee set forth in 37 CFR 1.17(g) has been paid.

The information in question has been determined by the undersigned to not be material to the examination of the instant application.

Applicant is required to retain the expunged material(s) for the life of any patent which issues on the above-identified application.

The expunged material has been removed from the official file.

CONCLUSION

The renewed petition under 37 CFR 1.47(b) is **DISMISSED** as moot. The declaration filed 11 August 2006 is accepted in compliance with 37 CFR 1.497.

The renewed petition to expunge under 37 CFR 1.59(b) is **GRANTED**.

The application is being forwarded to the National Stage Processing Branch of the Office of PCT Operations for further processing in accordance with this decision. The date under 35 U.S.C. 371(c)(1), (c)(2), and (c)(4) is 11 August 2006.

Boris Milef
Legal Examiner
Office of PCT Legal Administration
Telephone: (571) 272-3288
Facsimile: (571) 273- 0459

Enclosure:
Declaration by Tristan Brittain-Dissont

UNITED STATES PATENT AND TRADEMARK OFFICE

UNITED STATES DEPARTMENT OF COMMERCE
United States Patent and Trademark Office
Address: COMMISSIONER FOR PATENTS
P.O. Box 1450
Alexandria, Virginia 22313-1450
www.uspto.gov

ROTHWELL, FIGG, ERNST & MANBECK, P.C.
1425 K STREET, N.W.
SUITE 800
WASHINGTON, DC 20005

Mail Date: 04/20/2010

Applicant	: Bipin C. M. Patel	: DECISION ON REQUEST FOR
Patent Number	: 7662360	: RECALCULATION of PATENT
Issue Date	: 02/16/2010	: TERM ADJUSTMENT IN VIEW
Appliction No	: 10/521,814	: OF WYETH AND NOTICE OF INTENT TO
Filed	: 08/11/2006	: ISSUE CERTIFICATE OF CORRECTION
		:

The Request for Recalculation is **GRANTED** to the extent indicated.

The patent term adjustment has been determined to be **767** days. The USPTO will *sua sponte* issue a certificate of correction reflecting the amount of PTA days determined by the recalculation.

Prior to the issuance of the certificate of correction, the USPTO will afford patentee an opportunity to be heard and request reconsideration. Accordingly, patentee has **one month or thirty (30) days**, whichever is longer, to file a request for reconsideration of this patent term adjustment calculation. See 35 U.S.C. 154(b)(3)(B)(ii) and 37 CFR 1.322(a)(4). No extensions of time will be granted under 37 CFR 1.136.

Patentee should use document code PET.OP if electronically filing a request for reconsideration of this patent term adjustment calculation. The patentee must also include the information required by 37 CFR 1.705(b)(2) and the fee required by 37 CFR 1.18(e). If patentee does not file a timely request for reconsideration of this patent term adjustment calculation including the information required by 37 CFR 1.705(b)(2) and the fee required by 37 CFR 1.18(e), the USPTO will issue a certificate of correction reflecting the PTA determination noted above.

Patentee should be aware that in order to preserve the right to review in the United States District Court for the District of Columbia of the USPTO patent term adjustment determination, patentee must ensure that he or she also take the steps required under 35 U.S.C. 154(b)(4)(A) in a timely manner. Nothing in the request for recalculation should be construed as providing an alternative time frame for commencing a civil action under 35 U.S.C. 154(b)(4)(A).

Any questions concerning this decision should be directed to the Office of Patent Legal Administration at 571-272-7702.

UNITED STATES PATENT AND TRADEMARK OFFICE

Commissioner for Patents
United States Patent and Trademark Office
P.O. Box 1450
Alexandria, VA 22313-1450
www.uspto.gov

MAILED

MAR 1 2 2010

OFFICE OF PETITIONS

KING & SPALDING LLP
401 CONGRESS AVENUE
SUITE 3200
AUSTIN TX 78701

In re Application of	:	
Heuer, et al.	:	
Application No. 10/521,832	:	ON PETITION
Filed: April 5, 2005	:	

This is a decision on the petition to revive under 37 CFR 1.137(b), filed January 4, 2010.

The petition under 37 CFR 1.137(b) is **GRANTED**.

The above-identified application became abandoned for failure to timely pay the issue fee in response to the Notice of Allowance mailed August 17, 2009. This Notice set a statutory period for reply of three months. No issue fee having been received, the application became abandoned on November 18, 2009. The Office mailed a Notice of Abandonment on November 30, 2009.

With the instant petition, petitioner paid the petition fee, made the proper statement of unintentional delay, and submitted the required reply in the form of the issue fee.

The application is being forwarded to the Office of Data Management for processing into a patent.

Telephone inquiries related to this decision should be directed to the undersigned at (571)272-3207.

Cliff Congo
Petitions Attorney
Office of Petitions

DATE 9/25/07

APPLICATION NUMBER 10521835

DOC CODE PetDecTC

DOC DATE 9/25/07

DELIVER THE ATTACHED FIFLE/DOCUMENT TO THE TC SCANNING CENTER

CONTRACTOR: THE ATTACHED FILE/DOCUMENT MUST BE INDEXED AND SCANNED INTO IFW WITHIN **8** WORK HOURS; UPLOADING OF THE SCANNED IMAGES SHOULD OCCUR NO LATER THAN **16** WORK HOURS FOLLOWING RECEIPT OF THIS REQUEST

AFTER SCANNING, ORIGINAL DOCUMENTS SHOULD BE BOXED IN ACCORDANCE WITH INSTRUCTIONS

UNITED STATES PATENT AND TRADEMARK OFFICE

Commissioner for Patents
United States Patent and Trademark Office
P.O. Box 1450
Alexandria, VA 22313-1450
www.uspto.gov

CONLEY ROSE, P.C.
DAVID A. ROSE
P. O. BOX 3267
HOUSTON TX 77253-3267

COPY MAILED

SEP 2 5 2007

OFFICE OF PETITIONS

In re Application of	:	
O'Connor, Jason Daniel Harold	:	
Application No. 10/521,835	:	ON PETITION
Filed: March 17, 2005	:	
Attorney Docket No. 2135-00500	:	

This is a decision on the petition under 37 C.F.R. § 1.137(b), filed August 13, 2007, to revive the above-identified application.

The petition is **GRANTED.**

The petition satisfies the conditions for revival pursuant to the provisions of 37 CFR 1.137(b) in that (1) the reply in the form of a Request for Continued Examination (RCE); (2) the petition fee; and (3) the required statement of unintentional delay have been received. Accordingly, the response has been accepted as having been unintentionally delayed.

This matter is being referred to Technology Center 3700 for processing of the Request for Continued Examination under 37 CFR 1.114 filed with the instant petition.

Telephone inquiries regarding this decision should be directed to the undersigned at (571) 272-3206.

Liana Walsh
Petitions Examiner
Office of Petitions

UNITED STATES PATENT AND TRADEMARK OFFICE

Commissioner for Patents
United States Patent and Trademark Office
P.O. Box 1450
Alexandria, VA 22313-1450
www.uspto.gov

Huntley & Associates
1105 North Market Street
P.O. Box 948
Wilmington, DE 19899-0948

COPY MAILED

SEP 0 5 2006

OFFICE OF PETITIONS

In re Application of	:	
Yamahara Motohiro et al.	:	
Application No. 10/521,843	:	DECISION ON PETITION
Filed: August 11, 2005	:	TO WITHDRAW
Attorney Docket No. Sharp-2	:	FROM RECORD
	:	

This is a decision on the Request to Withdraw as attorney or agent under 37 C.F.R. § 1.36(b) or 37 C.F.R. § 10.40 filed March 29, 2006.

The request is **NOT APPROVED**.

A grantable request to withdraw as attorney/agent of record must be signed by every attorney/agent seeking to withdraw or contain a clear indication that one attorney is signing on behalf of another/others. A request to withdraw will not be approved unless at least 30 (thirty) days would remain between the date of approval and the later of the expiration date of a time to file a response or the expiration date of the maximum time period which can be extended under 37 C.F.R. § 1.136(a).

The Office cannot approve the request at this time since the reasons provided do not meet any of the conditions under the mandatory or permissive categories enumerated in 37 CFR 10.40. Section 10.40 of Title 37 of the Code of Federal Regulation states, "[a] practitioner shall not withdraw from employment in a proceeding before the Office without permission from the Office[.]" More specifically, 37 CFR 10.40 states, "[i]f paragraph (b) of this section is not applicable, a practitioner may not request permission to withdraw in matters pending before the Office unless such request or such withdrawal is" for one of the permissive reasons listed in 37 CFR 10.40(c). The reasons set forth in the request do not meet any of the conditions set forth in 37 CFR 10.40.

All future communications from the Office will continue to be directed to the above-listed address until otherwise notified by applicant.

Telephone inquiries concerning this decision should be directed to Charles Smoot 571-272-3299.

Karen Creasy for

David Bucci
Petitions Examiner
Office of Petition

Cc: GOMEZ INTERNATIONAL PATENT OFFICE, LLC
1501 N. RODNEY STREET
SUITE 101
WILMINGTON DE 19806

UNITED STATES PATENT AND TRADEMARK OFFICE

Commissioner for Patents
United States Patent and Trademark Office
P.O. Box 1450
Alexandria, VA 22313-1450
www.uspto.gov

Huntley & Associates
1105 North Market Street
P.O. Box 948
Wilmington, DE 19899-0948

COPY MAILED
SEP 0 5 2006
OFFICE OF PETITIONS

In re Application of	:	
Yamahara Motohiro et al.	:	
Application No. 10/521,846	:	DECISION ON PETITION
Filed: January 18, 2005	:	TO WITHDRAW
Attorney Docket No. Sharp-1	:	FROM RECORD
	:	

This is a decision on the Request to Withdraw as attorney or agent under 37 C.F.R. § 1.36(b) or 37 C.F.R. § 10.40 filed March 27, 2006.

The request is **NOT APPROVED**.

A grantable request to withdraw as attorney/agent of record must be signed by every attorney/agent seeking to withdraw or contain a clear indication that one attorney is signing on behalf of another/others. A request to withdraw will not be approved unless at least 30 (thirty) days would remain between the date of approval and the later of the expiration date of a time to file a response or the expiration date of the maximum time period which can be extended under 37 C.F.R. § 1.136(a).

The Office cannot approve the request at this time since the reasons provided do not meet any of the conditions under the mandatory or permissive categories enumerated in 37 CFR 10.40. Section 10.40 of Title 37 of the Code of Federal Regulation states, "[a] practitioner shall not withdraw from employment in a proceeding before the Office without permission from the Office[.]" More specifically, 37 CFR 10.40 states, "[i]f paragraph (b) of this section is not applicable, a practitioner may not request permission to withdraw in matters pending before the Office unless such request or such withdrawal is" for one of the permissive reasons listed in 37 CFR 10.40(c). The reasons set forth in the request do not meet any of the conditions set forth in 37 CFR 10.40.

All future communications from the Office will continue to be directed to the above-listed address until otherwise notified by applicant.

Telephone inquiries concerning this decision should be directed to Charles Smoot at 571-272-3299.

Karen Creedy for

David Bucci
Petitions Examiner
Office of Petition

Cc: GOMEZ INTERNATIONAL PATENT OFFICE, LLC
1501 N. RODNEY STREET
SUITE 101
WILMINGTON DE 19806

UNITED STATES PATENT AND TRADEMARK OFFICE

Commissioner for Patents
United States Patent and Trademark Office
P.O. Box 1450
Alexandria, VA 22313-1450
www.uspto.gov

NXP, B.V.
NXP INTELLECTUAL PROPERTY DEPARTMENT
M/S41-SJ
1109 MCKAY DRIVE
SAN JOSE CA 95131

COPY MAILED

FEB 25 2008

OFFICE OF PETITIONS

In re Application of :
Einzinger et al. :
Application No. 10/521,854 : ON PETITION
Filed: January 21, 2005 :
Attorney Docket No. DE 020186 :

This is a decision on the petition to withdraw the holding of abandonment under 37 CFR 1.181 filed on January 4, 2008.

The petition to withdraw the holding of abandonment is **GRANTED**

This above-identified application was held abandoned for failure to timely reply to the restriction requirement mailed July 16, 2007. The Restriction Requirement set a one (1) month shortened statutory period for reply. A Notice of Abandonment was mailed on January 2, 2008.

Petitioner contends that the time period to reply to the restriction requirement did not expire until January 16, 2008. Thus, the application was not abandoned on the mailing of the Notice of Abandonment. On petition, petitioner has provided a five month request for extension of time and a reply to the restriction requirement.

Pursuant to 37 CFR 1.136 petitioner was eligible to extend the period for reply up to five months. Thus, the maximum extendable time period was set to expire on January 16, 2008. Accordingly, the mailing of the Notice of Abandonment was prematurely mailed.

The Notice of Abandonment is hereby vacated and the holding of abandonment is withdrawn.

It is not apparent whether the person signing the statement of unintentional delay was in a position to have firsthand or direct knowledge of the facts and circumstances of the delay at

issue. Nevertheless, such statement is being treated as having been made as the result of a reasonable inquiry into the facts and circumstances of such delay. See 37 CFR 10.18(b). In the event that such an inquiry has not been made, petitioner must make such an inquiry. If such inquiry results in the discovery that it is not correct that the entire delay in filing the required reply from the due date for the reply until the filing of a grantable petition pursuant to 37 CFR 1.137(b) was unintentional, petitioner must notify the Office.

There is no indication that the person signing the present petition was ever given a power of attorney or authorization of agent to prosecute the above-identified application. A courtesy copy of this decision is being mailed to the address given on the petition. However, the Office will mail all future correspondence solely to the address of record.

This application is being forwarded to Art Unit 2832 for further processing of the reply to the restriction requirement.

Telephone inquiries concerning this matter should be directed to the undersigned at (571) 272-3215.

Charlema R. Grant

Charlema R. Grant
Petitions Attorney
Office of Petitions

cc: Thorne & Halajian, LLP
Applied Technology Center
111 West Main Street
Bay Shore, NY 11706

UNITED STATES PATENT AND TRADEMARK OFFICE

UNITED STATES DEPARTMENT OF COMMERCE
United States Patent and Trademark Office
Address: COMMISSIONER FOR PATENTS
P.O. Box 1450
Alexandria, Virginia 22313-1450
www.uspto.gov

SEED INTELLECTUAL PROPERTY LAW GROUP PLLC
701 FIFTH AVENUE, SUITE 5400
SEATTLE, WA 98104-7092

Mail Date: 04/21/2010

Applicant	: Josef Einzinger	: DECISION ON REQUEST FOR
Patent Number	: 7642891	: RECALCULATION of PATENT
Issue Date	: 01/05/2010	: TERM ADJUSTMENT IN VIEW
Appliction No	: 10/521,854	: OF WYETH AND NOTICE OF INTENT TO
Filed	: 01/21/2005	: ISSUE CERTIFICATE OF CORRECTION
		:

The Request for Recalculation is **GRANTED** to the extent indicated.

The patent term adjustment has been determined to be **534** days. The USPTO will *sua sponte* issue a certificate of correction reflecting the amount of PTA days determined by the recalculation.

Prior to the issuance of the certificate of correction, the USPTO will afford patentee an opportunity to be heard and request reconsideration. Accordingly, patentee has **one month or thirty (30) days**, whichever is longer, to file a request for reconsideration of this patent term adjustment calculation. See 35 U.S.C. 154(b)(3)(B)(ii) and 37 CFR 1.322(a)(4). No extensions of time will be granted under 37 CFR 1.136.

Patentee should use document code PET.OP if electronically filing a request for reconsideration of this patent term adjustment calculation. The patentee must also include the information required by 37 CFR 1.705(b)(2) and the fee required by 37 CFR 1.18(e). If patentee does not file a timely request for reconsideration of this patent term adjustment calculation including the information required by 37 CFR 1.705(b)(2) and the fee required by 37 CFR 1.18(e), the USPTO will issue a certificate of correction reflecting the PTA determination noted above.

Patentee should be aware that in order to preserve the right to review in the United States District Court for the District of Columbia of the USPTO patent term adjustment determination, patentee must ensure that he or she also take the steps required under 35 U.S.C. 154(b)(4)(A) in a timely manner. Nothing in the request for recalculation should be construed as providing an alternative time frame for commencing a civil action under 35 U.S.C. 154(b)(4)(A).

Any questions concerning this decision should be directed to the Office of Patent Legal Administration at 571-272-7702.

UNITED STATES PATENT AND TRADEMARK OFFICE

Commissioner for Patents
United States Patent and Trademark Office
P.O. Box 1450
Alexandria, VA 22313-1450
www.uspto.gov

LARRY LIBERCHUK
PHILIPS INTELLECTUAL PROPERTY & STANDARDS
P.O.BOX 3001
BRIARCLIFF MANOR NY 10510

COPY MAILED

JUL 3 0 2009

OFFICE OF PETITIONS

In re Application of :
Matin H. Blees :
Application No. 10/521,856 :
Filed: January 21, 2005 :
Attorney Docket No. NL020715US :

ON PETITION

This is a decision on the petition under the unintentional provisions of 37 CFR 1.137(b), filed June 24, 2009, to revive the above-identified application.

The petition is **GRANTED**.

The application became abandoned for failure to timely reply to the Notice of Non-Compliant Amendment under 37 CFR 1.121, mailed August 15, 2008. The Notice set a one month or thirty (30) day from the mail date of the Notice. . A three month extension of time pursuant to the provisions of 37 CFR 1.136 were obtained. Accordingly, the date of abandonment of this application is December 16, 2008.

The petition satisfies the requirements of 37 CFR 1.137(b) in that petitioner has supplied (1) the reply in the form of a Request for Continued Examination (RCE) and fee of $810, and the submission required by 37 CFR 1.114; (2) the petition fee of $1620; and (3) a proper statement of unintentional delay.

Telephone inquiries concerning this decision should be directed to Newton Edwards at (571) 272-6052 or in his absence to the undersigned at (571) 272-7099.

This application is being referred to Technology Center AU 2854 for processing of the RCE and for appropriate action by the Examiner in the normal course of business on the amendment submitted in accordance with 37 CFR 1.114.

David Bucci
Petitions Examiner
Office of Petitions

UNITED STATES PATENT AND TRADEMARK OFFICE

UNITED STATES DEPARTMENT OF COMMERCE
United States Patent and Trademark Office
Address: COMMISSIONER FOR PATENTS
P.O. Box 1450
Alexandria, Virginia 22313-1450
www.uspto.gov

PEARNE & GORDON LLP
1801 EAST 9TH STREET
SUITE 1200
CLEVELAND, OH 44114-3108

Mail Date: 04/21/2010

Applicant	: Fabrice Pardo	: DECISION ON REQUEST FOR
Patent Number	: 7629663	: RECALCULATION of PATENT
Issue Date	: 12/08/2009	: TERM ADJUSTMENT IN VIEW
Appliction No	: 10/521,879	: OF WYETH AND NOTICE OF INTENT TO
Filed	: 01/21/2005	: ISSUE CERTIFICATE OF CORRECTION
		:

The Request for Recalculation is **GRANTED** to the extent indicated.

The patent term adjustment has been determined to be **0** days. The USPTO will *sua sponte* issue a certificate of correction reflecting the amount of PTA days determined by the recalculation.

Prior to the issuance of the certificate of correction, the USPTO will afford patentee an opportunity to be heard and request reconsideration. Accordingly, patentee has **one month or thirty (30) days**, whichever is longer, to file a request for reconsideration of this patent term adjustment calculation. See 35 U.S.C. 154(b)(3)(B)(ii) and 37 CFR 1.322(a)(4). No extensions of time will be granted under 37 CFR 1.136.

Patentee should use document code PET.OP if electronically filing a request for reconsideration of this patent term adjustment calculation. The patentee must also include the information required by 37 CFR 1.705(b)(2) and the fee required by 37 CFR 1.18(e). If patentee does not file a timely request for reconsideration of this patent term adjustment calculation including the information required by 37 CFR 1.705(b)(2) and the fee required by 37 CFR 1.18(e), the USPTO will issue a certificate of correction reflecting the PTA determination noted above.

Patentee should be aware that in order to preserve the right to review in the United States District Court for the District of Columbia of the USPTO patent term adjustment determination, patentee must ensure that he or she also take the steps required under 35 U.S.C. 154(b)(4)(A) in a timely manner. Nothing in the request for recalculation should be construed as providing an alternative time frame for commencing a civil action under 35 U.S.C. 154(b)(4)(A).

Any questions concerning this decision should be directed to the Office of Patent Legal Administration at 571-272-7702.

01 SEP 2005

UNITED STATES PATENT AND TRADEMARK OFFICE

Commissioner for Patents
United States Patent and Trademark Office
P.O. Box 1450
Alexandria, VA 22313-1450
www.uspto.gov

Nathan J. Prepelka
Webb Ziesenheim Logsdon Orkin & Hanson, P.C.
436 Seventh Avenue
700 Koppers Building
Pittsburgh, PA 15219-1818

In re Application of
GUROSIK
Application No.: 10/521,897
PCT No.: PCT/US02/24579
Int. Filing Date: 01 August 2002
Priority Date: 01 August 2001
Atty. Docket No.: 3961-040483
For: COUPLING APPARATUS

DECISION ON PETITION

UNDER 37 CFR 1.137(b)

The petition to revive under 37 CFR 1.137(b) filed 18 January 2005 in the above-captioned application is hereby **GRANTED** as follows:

Applicant's statement that "the entire delay in entering the national phase of this application until the filing of a grantable petition under 37 C.F.R. § 1.137(b) was unintentional" is being interpreted to mean that "the entire delay in filing the required reply from the due date for the required reply until the filing of a grantable petition under 37 CFR 1.137(b) was unintentional." If this interpretation is incorrect, applicant must notify the Office immediately. Applicant's statement and the prompt filing of the petition satisfies the requirement of 37 CFR 1.137(b)(3).

A review of the application file reveals that applicant has now provided payment of the full, U.S. Basic National Fee. Therefore, the request to revive the application abandoned under 35 U.S.C. 371(d) is granted as to the National stage in the United States of America. Further, a review of the application file reveals that all of the requirements of 35 U.S.C. 371 for entry into the national stage in the United States have been satisfied.

The application has an international filing date of 01 August 2002 under 35 U.S.C. 363 and will be given a date of **18 January 2005** under 35 U.S.C. 371(c)(1), (c)(2) and (c)(4).

This application is being returned to the United States Designated/Elected Office (DO/EO/US) for treatment in accordance with this decision.

Derek A. Putonen
Attorney Advisor
Office of PCT Legal Administration
Tel: (571) 272-3294
Fax: (571) 273-0459

UNITED STATES PATENT AND TRADEMARK OFFICE

Commissioner for Patents
United States Patent and Trademark Office
P.O. Box 1450
Alexandria, VA 22313-1450
www.uspto.gov

THE WEBB LAW FIRM, P.C.
700 KOPPERS BUILDING
436 SEVENTH AVENUE
PITTSBURGH, PA 15219

COPY MAILED

SEP 2 0 2007

OFFICE OF PETITIONS

In re Application of	:	
John O. Gurosik	:	
Application No. 10/521,897	:	DECISION ON PETITION
Filed: January 18, 2005	:	TO WITHDRAW
Attorney Docket No. 3961-040483	:	FROM RECORD
	:	

This is a decision on the Request to Withdraw as attorney or agent of record under 37 C.F.R. § 1.36(b), filed July 18, 2007.

The request is **APPROVED**.

A grantable request to withdraw as attorney/agent of record must be signed by every attorney/agent seeking to withdraw or contain a clear indication that one attorney is signing on behalf of another/others. A request to withdraw will not be approved unless at least 30 (thirty) days would remain between the date of approval and the later of the expiration date of a time to file a response or the expiration date of the maximum time period which can be extended under 37 C.F.R. § 1.136(a).

The request was signed by Nathan J. Prepelka on behalf of all attorneys of record who are associated with customer No. 28289. All attorneys/agents associated with the Customer Number 28289 have been withdrawn.

Applicant is reminded that there is no attorney of record at this time.

The correspondence address of record has been changed and the new correspondence address is the address indicated below.

A final Office action was mailed on August 3, 2007. Failure to timely respond will result in the abandonment of this application.

Telephone inquiries concerning this decision should be directed to Kimberly Inabinet at 571-272-4618.

Kimberly Inabinet
Kimberly Inabinet
Petitions Examiner
Office of Petitions

cc: Mr. John O. Gurosik
800 Brandy Camp Road
Kersey, PA 15846

UNITED STATES PATENT AND TRADEMARK OFFICE

UNITED STATES DEPARTMENT OF COMMERCE
United States Patent and Trademark Office
Address: COMMISSIONER FOR PATENTS
P.O. Box 1450
Alexandria, Virginia 22313-1450
www.uspto.gov

APPLICATION NUMBER	FILING OR 371 (c) DATE	FIRST NAMED APPLICANT	ATTY. DOCKET NO./TITLE
10/521,897	01/18/2005	John O. Gurosik	3961-040483

CONFIRMATION NO. 7143

OC000000025850981

28289
THE WEBB LAW FIRM, P.C.
700 KOPPERS BUILDING
436 SEVENTH AVENUE
PITTSBURGH, PA 15219

Date Mailed: 09/17/2007

NOTICE REGARDING CHANGE OF POWER OF ATTORNEY

This is in response to the Power of Attorney filed 07/18/2007.

- The withdrawal as attorney in this application has been accepted. Future correspondence will be mailed to the new address of record. 37 CFR 1.33.

K. Gravinet

Office of Initial Patent Examination (571) 272-4000, or 1-800-PTO-9199

FORMER ATTORNEY/AGENT COPY

UNITED STATES PATENT AND TRADEMARK OFFICE

Commissioner for Patents
United States Patent and Trademark Office
P.O. Box 1450
Alexandria, VA 22313-1450
www.uspto.gov

MR. JOHN O. GUROSIK
800 BRANDY CAMP ROAD
KERSEY PA 15846

COPY MAILED

JAN 07 2010

In re Application of	:	
Gurosik, John O.	:	
Application No. 10/521,897	:	ON PETITION
Filed: January 18, 2005	:	
Title: COUPLING APPARATUS	:	

This is a decision on the petitions, filed January 2, 2009, June 9, 2009 and July 8, 2009, which are being treated as a petition under 37 CFR 1.8(b), requesting withdrawal of the holding of abandonment in the above-identified application.

The petition is **DISMISSED**.

This application was held abandoned for failure to timely and properly respond to the Office action of August 3, 2007, which set a three (3) month shortened statutory period for reply. Accordingly, as a three-month extension of time was submitted on November 1, 2007, a reply was due on or before February 3, 2008. An Advisory Action, issued by the examiner of record, was mailed April 9, 2008. A Notice of Abandonment was mailed August 28, 2008.

Petitioner states that a timely reply was submitted. On January 24, 2008, the following papers were received by the USPTO: Letter (3 pages), Drawings (1 page) and a CD.

However, as stated in the Advisory Action mailed April 9, 2008, the above reply did not place the application in condition for allowance. A proper reply to a final rejection under 37 CFR 1.113 may be: (1) an amendment, which places the application in condition for allowance; (2) a Notice of Appeal (with appeal fee); or (3) a Request for Continued Examination (RCE) in compliance with 37 CFR 1.114.

A copy of the Advisory Action issued by the Examiner is enclosed.

ALTERNATIVE VENUE

Petitioner is strongly encouraged to consider filing a petition under 37 CFR 1.137(b) to revive an unintentionally abandoned application instead of filing a renewed petition under 37 CFR 1.181.

A grantable petition pursuant to 37 CFR 1.137(b) must be accompanied by:

> (1) The reply required to the outstanding Office action or notice, unless previously filed. In nonprovisional utility application abandoned for failure to respond to a non-final Office action, the required reply may be met by filing either (A) an argument or amendment under 37 CFR 1.111 or (B) a continuing application under 37 CFR 1.53(b).

(2) The petition fee as set forth in 37 CFR 1.17(m), **$810.00 for a small entity**;

(3) A statement that the entire delay in filing the required reply from the due date for the reply until the filing of a grantable petition was unintentional. The Director may require additional information where there is a question whether the delay was unintentional.

A form for filing a petition to revive an unintentionally abandoned application accompanies this decision for petitioner's convenience. If petitioner desires to file a petition under 37 CFR 1.137(b) instead of filing a request for reconsideration, petitioner must complete the enclosed petition form (PTO/SB/64) and pay the $810.00 petition fee.

Petitioner may wish to consider hiring a registered patent attorney or agent to assist in the prosecution of this application. Additionally, petitioner is encouraged to contact the Inventors Assistance Center (IAC) by telephone at 800-786-9199 or 571-272-1000, Monday through Friday from 8:30 AM to 5:30 PM (EST). The IAC provides patent information and services to the public and is staffed by former Supervisory Patent Examiners and experienced Primary Examiners who answer general questions concerning patent examining policy and procedure.

Further correspondence with respect to this matter should be addressed as follows:

By mail: Mail Stop PETITIONS
Commissioner for Patents
Post Office Box 1450
Alexandria, VA 22313-1450

By hand: Customer Window located at:

U.S. Patent and Trademark Office
Customer Service Window Randolph Building
401 Dulany Street
Alexandria, VA 22314

By fax: (571) 273-8300
ATTN: Office of Petitions

Any questions concerning this matter may be directed to the undersigned at (571) 272-3206.

Liana Walsh
Petitions Examiner
Office of Petitions

Enclosure: Advisory Action (3 pages)
Petition under 37 CFR 1.137(b) (3 pages)

UNITED STATES PATENT AND TRADEMARK OFFICE

UNITED STATES DEPARTMENT OF COMMERCE
United States Patent and Trademark Office
Address: COMMISSIONER FOR PATENTS
P.O. Box 1450
Alexandria, Virginia 22313-1450
www.uspto.gov

APPLICATION NO.	FILING DATE	FIRST NAMED INVENTOR	ATTORNEY DOCKET NO.	CONFIRMATION NO.
10/521,897	01/18/2005	John O. Gurosik		7143

7590 04/09/2008

Mr. John O. Gurosik
800 Brandy Camp Road
Kersey, PA 15846

EXAMINER
FERGUSON, MICHAEL P

ART UNIT	PAPER NUMBER
3679	

MAIL DATE	DELIVERY MODE
04/09/2008	PAPER

Please find below and/or attached an Office communication concerning this application or proceeding.

The time period for reply, if any, is set in the attached communication.

Advisory Action Before the Filing of an Appeal Brief	Application No. 10/521,897	Applicant(s) GUROSIK, JOHN O.	
	Examiner MICHAEL P. FERGUSON	Art Unit 3679	

--The MAILING DATE of this communication appears on the cover sheet with the correspondence address --

THE REPLY FILED 24 January 2008 FAILS TO PLACE THIS APPLICATION IN CONDITION FOR ALLOWANCE.

1. ☒ The reply was filed after a final rejection, but prior to or on the same day as filing a Notice of Appeal. To avoid abandonment of this application, applicant must timely file one of the following replies: (1) an amendment, affidavit, or other evidence, which places the application in condition for allowance; (2) a Notice of Appeal (with appeal fee) in compliance with 37 CFR 41.31; or (3) a Request for Continued Examination (RCE) in compliance with 37 CFR 1.114. The reply must be filed within one of the following time periods:
   a) ☒ The period for reply expires 6 months from the mailing date of the final rejection.
   b) ☐ The period for reply expires on: (1) the mailing date of this Advisory Action, or (2) the date set forth in the final rejection, whichever is later. In no event, however, will the statutory period for reply expire later than SIX MONTHS from the mailing date of the final rejection.

   Examiner Note: If box 1 is checked, check either box (a) or (b). ONLY CHECK BOX (b) WHEN THE FIRST REPLY WAS FILED WITHIN TWO MONTHS OF THE FINAL REJECTION. See MPEP 706.07(f).

Extensions of time may be obtained under 37 CFR 1.136(a). The date on which the petition under 37 CFR 1.136(a) and the appropriate extension fee have been filed is the date for purposes of determining the period of extension and the corresponding amount of the fee. The appropriate extension fee under 37 CFR 1.17(a) is calculated from: (1) the expiration date of the shortened statutory period for reply originally set in the final Office action; or (2) as set forth in (b) above, if checked. Any reply received by the Office later than three months after the mailing date of the final rejection, even if timely filed, may reduce any earned patent term adjustment. See 37 CFR 1.704(b).

NOTICE OF APPEAL

2. ☐ The Notice of Appeal was filed on _____. A brief in compliance with 37 CFR 41.37 must be filed within two months of the date of filing the Notice of Appeal (37 CFR 41.37(a)), or any extension thereof (37 CFR 41.37(e)), to avoid dismissal of the appeal. Since a Notice of Appeal has been filed, any reply must be filed within the time period set forth in 37 CFR 41.37(a).

AMENDMENTS

3. ☐ The proposed amendment(s) filed after a final rejection, but prior to the date of filing a brief, will not be entered because
   (a) ☐ They raise new issues that would require further consideration and/or search (see NOTE below);
   (b) ☐ They raise the issue of new matter (see NOTE below);
   (c) ☐ They are not deemed to place the application in better form for appeal by materially reducing or simplifying the issues for appeal; and/or
   (d) ☐ They present additional claims without canceling a corresponding number of finally rejected claims.

   NOTE: _____. (See 37 CFR 1.116 and 41.33(a)).
4. ☐ The amendments are not in compliance with 37 CFR 1.121. See attached Notice of Non-Compliant Amendment (PTOL-324).
5. ☐ Applicant's reply has overcome the following rejection(s): _____.
6. ☐ Newly proposed or amended claim(s) _____ would be allowable if submitted in a separate, timely filed amendment canceling the non-allowable claim(s).
7. ☒ For purposes of appeal, the proposed amendment(s): a) ☐ will not be entered, or b) ☒ will be entered and an explanation of how the new or amended claims would be rejected is provided below or appended.
   The status of the claim(s) is (or will be) as follows:
   Claim(s) allowed: _____.
   Claim(s) objected to: _____.
   Claim(s) rejected: 1-20.
   Claim(s) withdrawn from consideration: _____.

AFFIDAVIT OR OTHER EVIDENCE

8. ☐ The affidavit or other evidence filed after a final action, but before or on the date of filing a Notice of Appeal will not be entered because applicant failed to provide a showing of good and sufficient reasons why the affidavit or other evidence is necessary and was not earlier presented. See 37 CFR 1.116(e).
9. ☐ The affidavit or other evidence filed after the date of filing a Notice of Appeal, but prior to the date of filing a brief, will not be entered because the affidavit or other evidence failed to overcome all rejections under appeal and/or appellant fails to provide a showing a good and sufficient reasons why it is necessary and was not earlier presented. See 37 CFR 41.33(d)(1).
10. ☐ The affidavit or other evidence is entered. An explanation of the status of the claims after entry is below or attached.

REQUEST FOR RECONSIDERATION/OTHER

11. ☐ The request for reconsideration has been considered but does NOT place the application in condition for allowance because: _____.
12. ☐ Note the attached Information *Disclosure Statement*(s). (PTO/SB/08) Paper No(s). _____
13. ☒ Other: See Continuation Sheet.

/Michael P. Ferguson/
Examiner
Art Unit: 3679

Continuation of 13. Other:

Applicant's arguments filed January 24, 2008 have been fully considered but they are not persuasive.

Applicant's arguments fail to comply with 37 CFR 1.111(b) because they amount to a general allegation that the claims define a patentable invention without specifically pointing out how the language of the claims patentably distinguishes them from the references. Accordingly, the rejection of claims 1-20 under 35 USC 102 in view of Anderson et al. (US 4,663,922), as set forth in the previous Office action, is still believed to be proper.

Paper No.: _____

DATE : 6/12/09

TO SPE OF : ART UNIT 1793

SUBJECT : Request for Certificate of Correction for Appl. No.: 10521899 Patent No.: 7507392 B2

Please respond to this request for a certificate of correction within 7 days.

FOR IFW FILES:

Please review the requested changes/corrections as shown in the **COCIN** document(s) in the IFW application image. No new matter should be introduced, nor should the scope or meaning of the claims be changed.

Please complete the response (see below) and forward the completed response to scanning using document code **COCX**.

FOR PAPER FILES:

Please review the requested changes/corrections as shown in the attached certificate of correction. Please complete this form (see below) and forward it with the file to:

Certificates of Correction Branch (CofC)
South Tower - 9A22
Palm Location 7580
You can fax the Directors/SPE response to 571-270-9990

LAMONTE NEWSOME

Certificates of Correction Branch

703-308-9390 ext. 112

Thank You For Your Assistance

The request for issuing the above-identified correction(s) is hereby:

Note your decision on the appropriate box.

☐ **Approved** **All** changes apply.

☐ **Approved in Part** Specify below
which changes **do not** apply.

☐ **Denied** State the reasons
for denial below.

Comments:

/J.A. Lorengo/ AU 1793

SPE

Art Unit

UNITED STATES PATENT AND TRADEMARK OFFICE

UNITED STATES DEPARTMENT OF COMMERCE
United States Patent and Trademark Office
Address: COMMISSIONER FOR PATENTS
P.O. Box 1450
Alexandria, Virginia 22313-1450
www.uspto.gov

SCULLY, SCOTT, MURPHY & PRESSER, P.C.
400 GARDEN CITY PLAZA
SUITE 300
GARDEN CITY, NY 11530

Mail Date: 04/22/2010

Applicant	: Kevin Jeffrey Barnham	: DECISION ON REQUEST FOR
Patent Number	: 7619091	: RECALCULATION of PATENT
Issue Date	: 11/17/2009	: TERM ADJUSTMENT IN VIEW
Appliction No	: 10/521,902	: OF WYETH AND NOTICE OF INTENT TO
Filed	: 08/10/2005	: ISSUE CERTIFICATE OF CORRECTION
		:

The Request for Recalculation is **GRANTED** to the extent indicated.

The patent term adjustment has been determined to be **889** days. The USPTO will *sua sponte* issue a certificate of correction reflecting the amount of PTA days determined by the recalculation.

Prior to the issuance of the certificate of correction, the USPTO will afford patentee an opportunity to be heard and request reconsideration. Accordingly, patentee has **one month or thirty (30) days**, whichever is longer, to file a request for reconsideration of this patent term adjustment calculation. See 35 U.S.C. 154(b)(3)(B)(ii) and 37 CFR 1.322(a)(4). No extensions of time will be granted under 37 CFR 1.136.

Patentee should use document code PET.OP if electronically filing a request for reconsideration of this patent term adjustment calculation. The patentee must also include the information required by 37 CFR 1.705(b)(2) and the fee required by 37 CFR 1.18(e). If patentee does not file a timely request for reconsideration of this patent term adjustment calculation including the information required by 37 CFR 1.705(b)(2) and the fee required by 37 CFR 1.18(e), the USPTO will issue a certificate of correction reflecting the PTA determination noted above.

Patentee should be aware that in order to preserve the right to review in the United States District Court for the District of Columbia of the USPTO patent term adjustment determination, patentee must ensure that he or she also take the steps required under 35 U.S.C. 154(b)(4)(A) in a timely manner. Nothing in the request for recalculation should be construed as providing an alternative time frame for commencing a civil action under 35 U.S.C. 154(b)(4)(A).

Any questions concerning this decision should be directed to the Office of Patent Legal Administration at 571-272-7702.

UNITED STATES PATENT AND TRADEMARK OFFICE

UNITED STATES DEPARTMENT OF COMMERCE
United States Patent and Trademark Office
Address: COMMISSIONER FOR PATENTS
P.O. Box 1450
Alexandria, Virginia 22313-1450
www.uspto.gov

BACHMAN & LAPOINTE, P.C.
900 CHAPEL STREET
SUITE 1201
NEW HAVEN, CT 06510

Mail Date: 05/07/2010

Applicant	: Christophe Lorthioir	: DECISION ON REQUEST FOR
Patent Number	: 7611179	: RECALCULATION of PATENT
Issue Date	: 11/03/2009	: TERM ADJUSTMENT IN VIEW
Application No	: 10/521,907	: OF WYETH AND NOTICE OF INTENT TO
Filed	: 09/19/2005	: ISSUE CERTIFICATE OF CORRECTION
		:

The Request for Recalculation is **GRANTED** to the extent indicated.

The patent term adjustment has been determined to be **865** days. The USPTO will *sua sponte* issue a certificate of correction reflecting the amount of PTA days determined by the recalculation.

Prior to the issuance of the certificate of correction, the USPTO will afford patentee an opportunity to be heard and request reconsideration. Accordingly, patentee has **one month or thirty (30) days**, whichever is longer, to file a request for reconsideration of this patent term adjustment calculation. See 35 U.S.C. 154(b)(3)(B)(ii) and 37 CFR 1.322(a)(4). No extensions of time will be granted under 37 CFR 1.136.

Patentee should use document code PET.OP if electronically filing a request for reconsideration of this patent term adjustment calculation. The patentee must also include the information required by 37 CFR 1.705(b)(2) and the fee required by 37 CFR 1.18(e). If patentee does not file a timely request for reconsideration of this patent term adjustment calculation including the information required by 37 CFR 1.705(b)(2) and the fee required by 37 CFR 1.18(e), the USPTO will issue a certificate of correction reflecting the PTA determination noted above.

Patentee should be aware that in order to preserve the right to review in the United States District Court for the District of Columbia of the USPTO patent term adjustment determination, patentee must ensure that he or she also take the steps required under 35 U.S.C. 154(b)(4)(A) in a timely manner. Nothing in the request for recalculation should be construed as providing an alternative time frame for commencing a civil action under 35 U.S.C. 154(b)(4)(A).

Any questions concerning this decision should be directed to the Office of Patent Legal Administration at 571-272-7702.

UNITED STATES PATENT AND TRADEMARK OFFICE

Commissioner for Patents
United States Patent and Trademark Office
P.O. Box 1450
Alexandria, VA 22313-1450
www.uspto.gov

Dickinson Wright PLLC
38525 Woodward Avenue
Suite 2000
Bloomfield Hills MI 48304

COPY MAILED

APR 0 9 2009

OFFICE OF PETITIONS

In re Application of	:	
BARTLETT, STEPHEN CHARLES	:	
Application No. 10/521,911	:	DECISION ON PETITION
Filed: 09/19/2005	:	
Attorney Docket No. GKNG 1233 PCT	:	

This is a decision on the petition under the unintentional provisions of 37 CFR 1.137(b), filed October 24, 2008, to revive the above-identified application.

The petition is **GRANTED**.

The application became abandoned for failure to reply in a timely manner to the non-final Office action, mailed July 16, 2007, which set a shortened statutory period for reply of three (3) months. No extensions of time under the provisions of 37 CFR 1.136(a) were obtained. Accordingly, the application became abandoned on October 17, 2007. On February 12, 2008, the Office mailed a Notice of Abandonment.

The petition satisfies the requirements of 37 CFR 1.137(b) in that petitioner has supplied (1) the reply, (2) the petition fee, and (3) a proper statement of unintentional delay.

Telephone inquiries concerning this decision should be directed to the undersigned at (571) 272-3211.

This application is being referred to Technology Center AU 3679 for appropriate action by the Examiner.

Christina T. Donnell

Christina Tartera Donnell
Senior Petitions Attorney
Office of Petitions

UNITED STATES PATENT AND TRADEMARK OFFICE

UNITED STATES DEPARTMENT OF COMMERCE
United States Patent and Trademark Office
Address: COMMISSIONER FOR PATENTS
P.O. Box 1450
Alexandria, Virginia 22313-1450
www.uspto.gov

GKN Driveline/TTG
c/o Kristin L. Murphy
39533 Woodward Avenue, suite 140
Bloomfield Hills, MI 48304

Mail Date: 04/21/2010

Applicant	: Stephen Charles Bartlett	: DECISION ON REQUEST FOR
Patent Number	: 7641557	: RECALCULATION of PATENT
Issue Date	: 01/05/2010	: TERM ADJUSTMENT IN VIEW
Appliction No	: 10/521,911	: OF WYETH AND NOTICE OF INTENT TO
Filed	: 09/19/2005	: ISSUE CERTIFICATE OF CORRECTION
		:

The Request for Recalculation is **GRANTED** to the extent indicated.

The patent term adjustment has been determined to be **637** days. The USPTO will *sua sponte* issue a certificate of correction reflecting the amount of PTA days determined by the recalculation.

Prior to the issuance of the certificate of correction, the USPTO will afford patentee an opportunity to be heard and request reconsideration. Accordingly, patentee has **one month or thirty (30) days**, whichever is longer, to file a request for reconsideration of this patent term adjustment calculation. See 35 U.S.C. 154(b)(3)(B)(ii) and 37 CFR 1.322(a)(4). No extensions of time will be granted under 37 CFR 1.136.

Patentee should use document code PET.OP if electronically filing a request for reconsideration of this patent term adjustment calculation. The patentee must also include the information required by 37 CFR 1.705(b)(2) and the fee required by 37 CFR 1.18(e). If patentee does not file a timely request for reconsideration of this patent term adjustment calculation including the information required by 37 CFR 1.705(b)(2) and the fee required by 37 CFR 1.18(e), the USPTO will issue a certificate of correction reflecting the PTA determination noted above.

Patentee should be aware that in order to preserve the right to review in the United States District Court for the District of Columbia of the USPTO patent term adjustment determination, patentee must ensure that he or she also take the steps required under 35 U.S.C. 154(b)(4)(A) in a timely manner. Nothing in the request for recalculation should be construed as providing an alternative time frame for commencing a civil action under 35 U.S.C. 154(b)(4)(A).

Any questions concerning this decision should be directed to the Office of Patent Legal Administration at 571-272-7702.

UNITED STATES PATENT AND TRADEMARK OFFICE

Commissioner for Patents
United States Patent and Trademark Office
P.O. Box 1450
Alexandria, VA 22313-1450
www.uspto.gov

SCHLUMBERGER OILFIELD
SERVICES
200 GILLINGHAM LANE
MD 200-9
SUGAR LAND TX 77478

COPY MAILED

JUL 30 2007

OFFICE OF PETITIONS

In re Application of	:	
Faur et al.	:	
Application No. 10/521912	:	
Filing or 371(c) Date: 01/20/2005	:	ON PETITION
Attorney Docket Number:	:	
US21.1045	:	

This is a decision on the petition under 37 CFR 1.137(b), filed May 16, 2007, to revive the above-identified application. The delay in treating this petition is regretted.

This Petition is hereby **dismissed**.

Any further petition to revive the above-identified application must be submitted within TWO (2) MONTHS from the mail date of this decision. Extensions of time under 37 CFR 1.136(a) are permitted. The reconsideration request should include a cover letter entitled "Request for Reconsideration of Petition under [insert the applicable code section]". This is **not** final agency action within the meaning of 5 U.S.C. § 704.

Background

The above-identified application became abandoned for failure to timely and properly reply to the final Office action, mailed September 1, 2006. The Office action set a three (3) month period for reply from the mail date of the Office action. Extensions of time were available under 37 CFR 1.136(a). No reply having been received, the application became abandoned on December 2, 2006. A Notice of Abandonment was mailed March 16, 2007.

The present petition

Applicant files the instant petition and Amendment.

The Examiner has reviewed the Amendment and concluded that the Amendment fails to place the application in condition for allowance.

Applicable Law, Rules and MPEP

A grantable petition pursuant to this paragraph must be accompanied by:
(1) The reply required to the outstanding Office action or notice, unless previously filed;
(2) The petition fee as set forth in § 1.17(m);
(3) A statement that the entire delay in filing the required reply from the due date for the reply until the filing of a grantable petition pursuant to this paragraph was unintentional. The Director may require additional information where there is a question whether the delay was unintentional; and (4) Any terminal disclaimer (and fee as set forth in § 1.20(d)) required pursuant to paragraph (d) of this section.

The required reply may be met by the filing of a continuing application. In a nonprovisional utility or plant application filed on or after June 8, 1995, and abandoned for failure to prosecute, the required reply may also be met by the filing of a request for continued examination in compliance with § 1.114. In an application or patent, abandoned or lapsed for failure to pay the issue fee or any portion thereof, the required reply must include payment of the issue fee or any outstanding balance. In an application, abandoned for failure to pay the publication fee, the required reply must include payment of the publication fee.

As to item (1), Applicant has failed to submit the required reply to the Office action.

Further correspondence with respect to this matter should be addressed as follows:

By mail: Director for Patents
PO Box 1450
Alexandria, VA 22313-1450

By FAX: (571) 273-8300
Attn: Office of Petitions

By hand: Customer Service Window
Randolph Building
401 Dulany Street
Alexandria, VA 22314

Inquiries regarding the Amendment should be directed to the Examiner. Telephone inquiries concerning this petition Decision should be directed to the undersigned at (571) 272-3232.

Derek L. Woods
Attorney
Office of Petitions

UNITED STATES PATENT AND TRADEMARK OFFICE

Commissioner for Patents
United States Patent and Trademark Office
P.O. Box 1450
Alexandria, VA 22313-1450
www.uspto.gov

SCHLUMBERGER OILFIELD
SERVICES
200 GILLINGHAM LANE
MD 200-9
SUGAR LAND TX 77478

COPY MAILED

NOV 16 2007

OFFICE OF PETITIONS

In re Application of	:	
Faur et al.	:	
Application No. 10/521912	:	
Filing or 371(c) Date: 01/20/2005	:	ON PETITION
Attorney Docket Number: US21.1045	:	

This is a decision on the renewed petition under 37 CFR 1.137(b), filed September 12, 2007, to revive the above-identified application.

The petition is **GRANTED**.

The application became abandoned for failure to timely file a reply within the meaning of 37 CFR 1.113 to the final Office action of September 1, 2006. The proposed reply required for consideration of a petition to revive must be a Notice of Appeal (and appeal fee required by 37 CFR 41.20(b)(2), an amendment that *prima facie* places the application in condition for allowance, a Request for Continued Examination and submission (37 CFR 1.114), or the filing of a continuing application under 37 CFR 1.53(b). See MPEP 711.03(c)(III)(A)(2). No extensions of time pursuant to the provisions of 37 CFR 1.136(a) were obtained. Accordingly, the date of abandonment of this application is December 2, 2006.

The petition satisfies the requirements of 37 CFR 1.137(b) in that petitioner has supplied (1) the reply in the form of a Request for Continued Examination (RCE) and fee, and the submission required by 37 CFR 1.114; (2) the petition fee; and (3) a proper statement of unintentional delay.

Telephone inquiries concerning this decision should be directed to the undersigned at (571) 272-3232.

This application is being referred to Technology Center AU 2855 for processing of the RCE and for appropriate action by the Examiner in the normal course of business on the amendment submitted in accordance with 37 CFR 1.114.

Derek L. Woods
Attorney
Office of Petitions

UNITED STATES PATENT AND TRADEMARK OFFICE

Commissioner for Patents
United States Patent and Trademark Office
P.O. Box 1450
Alexandria, VA 22313-1450
www.uspto.gov

NOVARTIS
CORPORATE INTELLECTUAL PROPERTY
ONE HEALTH PLAZA 104/3
EAST HANOVER NJ 07936-1080

COPY MAILED

OCT 30 2006

OFFICE OF PETITIONS

In re Application of :
Heinz Berner et al. :
Application No. 10/521,926 : DECISION ON PETITION
Filed: July 22, 2005 : TO WITHDRAW
Attorney Docket No. 32577A : FROM RECORD

This is a decision on the Request to Withdraw as attorney or agent of record under 37 C.F.R. § 1.36(b), filed May 16, 2006.

The request is **NOT APPROVED**.

A grantable request to withdraw as attorney/agent of record must be signed by every attorney/agent seeking to withdraw or contain a clear indication that one attorney is signing on behalf of attorneys/agents associated with customer number 01095. A request to withdraw will not be approved unless at least 30 (thirty) days would remain between the date of approval and the later of the expiration date of a time to file a response or the expiration date of the maximum time period which can be extended under 37 C.F.R. § 1.136(a).

The Office cannot approve the request at this time since the reasons provided do not meet any of the conditions under the mandatory or permissive categories enumerated in 37 CFR 10.40. Section 10.40 of Title 37 of the Code of Federal Regulation states, "[a] practitioner shall not withdraw from employment in a proceeding before the Office without permission from the Office[.]" More specifically, 37 CFR 10.40 states, "[i]f paragraph (b) of this section is not applicable, a practitioner may not request permission to withdraw in matter pending before the Office unless such request or such withdrawal is" for one the permissive reasons listed in 37 CFR 10.40(c). The reasons set forth in the request, File Transfer, do not meet any the conditions set forth in 37 CFR 10.40.

All future communications from the Office will continue to be directed to the above-listed address until otherwise notified by applicant.

Telephone inquiries concerning this decision should be directed to Charles Smoot at 571-272- 3299.

David Bucci
Petitions Examiner
Office of Petitions

Cc: D. Peter Hochberg Co., LPA
1940 East 6th Street, 6th Floor
Cleveland, OH 44114-2294

UNITED STATES PATENT AND TRADEMARK OFFICE

Commissioner for Patents
United States Patent and Trademark Office
P.O. Box 1450
Alexandria, VA 22313-1450
www.uspto.gov

NOVARTIS
CORPORATE INTELLECTUAL PROPERTY
ONE HEALTH PLAZA 104/3
EAST HANOVER NJ 07936-1080

COPY MAILED

MAY 25 2007

OFFICE OF PETITIONS

In re Application of	:	
BERNER, Heinz et al.	:	
Application No. 10/521,926	:	DECISION ON PETITION
Filed: July 22, 2005	:	TO WITHDRAW
Attorney Docket No. **IB/G-32577A/ABR 9926**	:	FROM RECORD
	:	

This is a decision on the Request to Withdraw as attorney or agent of record under 37 C.F.R. § 1.36(b), filed March 01, 2007.

The request is **NOT APPROVED** as moot.

A review of the file record indicates that the power of attorney to NOVARTIS CORPORATE INTELLECTUAL PROPERTY, has been revoked by the assignee of the patent application on March 21, 2007. Accordingly, the request to withdraw under 37 C.F.R. § 1.36(b) is moot.

All future communications from the Office will continue to be directed to the below-listed address until otherwise notified by applicant.

Telephone inquires concerning this decision should be directed to Tredelle Jackson at 571-272-2783.

Monica A. Graves
Petitions Examiner
Office of Petitions

cc: **D. PETER HOCHBERG CO. L.P.A.**
1940 EAST 6TH STREET
CLEVELAND, OH 44114

UNITED STATES PATENT AND TRADEMARK OFFICE

Commissioner for Patents
United States Patent and Trademark Office
P.O. Box 1450
Alexandria, VA 22313-1450
www.uspto.gov

15 SEP 2006

21171
STAAS & HALSEY LLP
Suite 700
1201 New York Avenue, N.W.
Washington, DC 20005

In re Application of	:	
HASEGAWA, Tadashi	:	
Application No.: 10/521,945	:	**DECISION ON**
PCT No.: PCT/JP02/07402	:	
Int. Filing Date: 22 July 2002	:	**PETITION**
Priority Date: None	:	
Attorney's Docket No.: 1466.1102	:	**UNDER 37 CFR 1.182**
For: ELECTRONIC MAIL SERVER,	:	
METHOD FOR RELAYING . . .	:	

This decision is in response to applicant's "Petition to the Director Under 37 C.F.R. Section 1.182 Requesting Conversion of a 371 Application into a 111(A) Application" filed 09 August 2006. The $400.00 fee has been paid.

BACKGROUND

On 22 July 2002, applicants filed international application PCT/JP02/07402. No priority date was claimed. Accordingly, the thirty-month period for paying the basic national fee in the United States expired at midnight on 24 January 2005 (22 January 2005 was a Saturday).

On 21 January 2005, applicants submitted a transmittal letter for entry into the national stage in the United States, accompanied by the basic national fee and an executed declaration.

On 24 August 2005, the DO/EO/US mailed a Notification of Acceptance (Form PCT/DO/EO/903) indicating that the requirements under 35 U.S.C. §371(c)(1), (2) and (4) were satisfied on 21 January 2005.

On 09 August 2006, applicants filed the instant petition to convert.

DISCUSSION

U.S. Statutes and Regulations do not make specific provision for the requested action and as such the Office does not grant such petitions for conversion as a mere matter of course. The Office will only grant such petitions upon a showing by applicant

of sufficient cause (e.g., the loss of patent rights) where no other remedy is available.

In the present petition, applicants have not made a showing that a loss of patent rights would occur if the above-captioned application is a filing under 35 U.S.C. §371. Further, applicants have not explained why the filing of a continuation application under 35 U.S.C. §111 would be inadequate.

CONCLUSION

As discussed above, applicant's petition under 37 CFR 1.182 is **DISMISSED** without prejudice.

Any further correspondence with respect to this matter should be addressed to the Mail Stop PCT, Commissioner for Patents, Office of PCT Legal Administration, P.O. Box 1450, Alexandria, Virginia 22313-1450, with the contents of the letter marked to the attention of the Office of PCT Legal Administration.

This application is being returned to Group Art Unit 2157 for continued processing.

James Thomson

James Thomson
Attorney Advisor
Office of PCT Legal Administration

Tel: 571-272-3302

02 FEB 2006

UNITED STATES PATENT AND TRADEMARK OFFICE

#6

Commissioner for Patents
United States Patent and Trademark Office
P.O. Box 1450
Alexandria, VA 22313-1450
www.uspto.gov

Che Swyden Chereskin, Ph.D.
Knobbe Martens Olson & Bear, LLP
2040 Main Street
Fourteenth Floor
Irvine, CA 92614

In re Application of YASUDA, et al. Application No.: 10/521,947 PCT No.: PCT/JP03/09272 Int. Filing Date: 22 July 2003 Priority Date: 22 July 2002 For: COMPOSITION FOR PROMOTING THE PROLIFERATION OF LACTOBACILLUS CASEI SUBSP. CASEI	DECISION ON PETITION UNDER 37 CFR 1.181

This decision is in response to applicant's petition filed 13 January 2006 in the United States Patent and Trademark Office (USPTO). The petition is being considered pursuant to under 37 CFR 1.181. No petition fee is required.

BACKGROUND

On 22 July 2003, applicant filed international application PCT/JP03/09272 which claimed priority to an earlier Japanese application filed 22 July 2002. A copy of the international application was communicated to the United States Patent and Trademark Office from the International Bureau on 29 January 2004. Pursuant to 37 CFR 1.495, the thirty-month period for paying the basic national fee in the United States expired at midnight on 22 January 2005.

On 21 January 2005, applicant filed a transmittal letter for entry into the national stage in the United States, which was accompanied by the requisite basic national fee as required by 35 U.S.C. 371(c)(1); an English translation of the international application and a preliminary amendment. An oath or declaration as required by 35 U.S.C. 371 (c)(4) was not filed.

On 18 July 2005 applicant was mailed a NOTIFICATION OF MISSING REQUIREMENTS UNDER 35 U.S.C. 371 (Form PCT/DO/EO/905) informing applicant of the need to provide an executed oath or declaration of the inventors, in compliance with 37 CFR 1.497(a) and (b), identifying the application by the International application number and international filing date. Applicant was given two months to respond and advised that this time period could be extended with a proper petition and payment of fees.

On 13 January 2006, applicant filed the present petition under 37 CFR 1.181 indicating that an executed declaration and power of attorney was mailed on 18 February 2005 and an

additional copy was mailed on 09 August 2005.

DISCUSSION

I. Petition Filed 13 January 2006

A review of the application file finds the submission mailed by applicant on 09 August 2005 contained therein. The filing is stamped with a USPTO date stamp "JC06 Rec'd PCT/PTO 15 AUG 2005" indicating receipt by the USPTO on 15 August 2005. Therefore, it is not necessary to consider applicant's present petition under 37 CFR 1.181 to accept the copy filed 13 January 2006 for the original petition filed 15 August 2005 and the present petition is **DISMISSED as moot**.

II. Submission Filed 15 August 2005

The submission of 15 August 2005 is being treated as a petition under 37 CFR 1.181 to accept the copy of declaration filed 15 August 2005 as a substitute for the declaration purportedly filed on 18 February 2005.

The best evidence of what was actually received by the Office is a postcard receipt containing a specific itemization of all the items being submitted. See MPEP 503. In the present case, applicant has not provided a stamped postcard receipt. In addition, the filing was not mailed as an Express Mail mailing from the U.S. Post Office. As applicant has not provided any proof that the first-class mailing containing the declaration was ever received by the USPTO, it is not possible to grant applicant's petition at this time. However, applicant's 15 August 2005 filing was a timely response to the Form PCT/DO/EO/905 mailed 18 July 2005. A review of the declaration finds that it is in compliance with 37 CFR 1.497 (a)-(b) and that with the filing of the declaration applicant has satisfied all of the 35 U.S.C. 371 requirements for entering the National stage in the United States.

CONCLUSION

Applicant's petition under 37 CFR 1.181 filed 13 January 2006 is **DISMISSED as moot**.

Applicant's petition under 37 CFR 1.181 filed 15 August 2005 is **DISMISSED**.

Applicant is hereby afforded **TWO (2) MONTHS** from the mail date of this decision to file any request for reconsideration. Any reconsideration request should include a cover letter entitled, "Renewed Petition Under 37 CFR 1.181."

Any further correspondence with respect to this matter should be directed to Mail Stop PCT, Commissioner for Patents, Office of PCT Legal Administration, P.O. Box 1450, Alexandria, Virginia 22313-1450, with the contents of the letter marked to the attention of the Office of PCT

Legal Administration.

The application will be given an international filing date of 22 July 2003 under 35 U.S.C. 363 and a date of **15 August 2005** under 35 U.S.C. 371(c)(1), (c)(2) and (c)(4).

This application is being returned to the United States Designated/Elected Office (US/DO/EO) for further processing in accordance with this decision, namely the issuance of a "Notification of Acceptance of Application Under 35 U.S.C. 371 and 37 CFR 1.494 or 1.495" (Form PCT/DO/EO/903) indicating a 371 date as detailed above.

Derek A. Putonen
Attorney Advisor
Office of PCT Legal Administration
Tel: (571) 272-3294
Fax: (571) 273-0459

#8

UNITED STATES PATENT AND TRADEMARK OFFICE

Commissioner for Patents
United States Patent and Trademark Office
P.O. Box 1450
Alexandria, VA 22313-1450
www.uspto.gov

16 FEB 2006

Che Swyden Chereskin, Ph.D.
Knobbe Martens Olson & Bear, LLP
2040 Main Street
Fourteenth Floor
Irvine, CA 92614

In re Application of YASUDA, et al. Application No.: 10/521,947 PCT No.: PCT/JP03/09272 Int. Filing Date: 22 July 2003 Priority Date: 22 July 2002 For: COMPOSITION FOR PROMOTING THE PROLIFERATION OF LACTOBACILLUS CASEI SUBSP. CASEI	SUPPLEMENTAL DECISION ON PETITION UNDER 37 CFR 1.181

This is a supplemental decision to the decision mailed 02 February 2006

On 02 February 2006, applicant was mailed a decision dismissing applicant's petition under 37 CFR 1.181 to accept the copy of the declaration filed 15 August 2005 for a declaration originally mailed on 18 February 2005.

Applicant's original declaration filed 24 February 2005 has been located and forwarded to the Office of PCT Legal Administration. Therefore, any renewed petition would be dismissed as moot. The portion of the decision mailed 02 February 2005 assigning the application a date of 15 August 2005 under 35 U.S.C. 371(c)(1), (c)(2) and (c)(4) is hereby **VACATED**.

This application is being returned to the United States Designated/Elected Office (US/DO/EO) for further processing in accordance with this decision, namely the issuance of a "Notification of Acceptance of Application Under 35 U.S.C. 371 and 37 CFR 1.494 or 1.495" (Form PCT/DO/EO/903) indicating a 35 U.S.C. 371(c)(1), (c)(2) and (c)(4) date of **24 February 2005**.

Derek A. Putonen
Attorney Advisor
Office of PCT Legal Administration
Tel: (571) 272-3294
Fax: (571) 273-0459

UNITED STATES PATENT AND TRADEMARK OFFICE

UNITED STATES DEPARTMENT OF COMMERCE
United States Patent and Trademark Office
Address: COMMISSIONER FOR PATENTS
P.O. Box 1450
Alexandria, Virginia 22313-1450
www.uspto.gov

APPLICATION NO.	FILING DATE	FIRST NAMED INVENTOR	ATTORNEY DOCKET NO.	CONFIRMATION NO.
10/521,958	01/21/2005	Hiroyuki Shirai	TOYA129.008APC	2101

20995 7590 11/14/2008
KNOBBE MARTENS OLSON & BEAR LLP
2040 MAIN STREET
FOURTEENTH FLOOR
IRVINE, CA 92614

EXAMINER
JEAN-LOUIS, SAMIRA JM

ART UNIT	PAPER NUMBER
1617	

NOTIFICATION DATE	DELIVERY MODE
11/14/2008	ELECTRONIC

Please find below and/or attached an Office communication concerning this application or proceeding.

The time period for reply, if any, is set in the attached communication.

Notice of the Office communication was sent electronically on above-indicated "Notification Date" to the following e-mail address(es):

jcartee@kmob.com
eOAPilot@kmob.com

UNITED STATES PATENT AND TRADEMARK OFFICE

Commissioner for Patents
United States Patent and Trademark Office
P.O. Box 1450
Alexandria, VA 22313-1450
www.uspto.gov

KNOBBE MARTENS OLSON & BEAR LLP
2040 MAIN STREET
FOURTEENTH FLOOR
IRVINE CA 92614

NOV 1 4 2008

In re Application of	:
Shirai et al.	:
Serial No.: 10/521,958	: SUSPENSION OF ACTION
Filed: January 21, 2005	:
Attorney Docket No.: **TOYA129.008APC**	:

This is in reply to the petition under 37 CFR 1.103(a) to suspend action in this application at applicants' request for a period of three months, filed September 8, 2008.

BACKGROUND

Applicants request prosecution in this application be suspended for a period of three months in order to collect data to rebut the instant rejections. It is said that this additional time is necessary to complete the testing.

DISCUSSION

§ 1.103 Suspension of action by the Office.

(a) Suspension for cause. On request of the applicant, the Office may grant a suspension of action by the Office under this paragraph for good and sufficient cause. The Office will not suspend action if a reply by applicant to an Office action is outstanding. Any petition for suspension of action under this paragraph must specify a period of suspension not exceeding six months. Any petition for suspension of action under this paragraph must also include:
(1) A showing of good and sufficient cause for suspension of action; and
(2) The fee set forth in § 1.17(h), unless such cause is the fault of the Office.

Applicants have replied to the last Office action by filing arguments. Applicants have shown good and sufficient reason for suspension.

DECISION

In view of the above the petition for suspension of action is **GRANTED** for a period of three months, as requested, from the date of mailing of this decision.

Should applicants complete their testing prior to the expiration of the period of suspension, a submission of the results should be promptly forwarded to the Office so that prosecution may be resumed.

Should there be any questions with respect to this action, please contact the examiner or Marianne Seidel, by mail addressed to: Director, Technology Center 1600, P. O. BOX 1450, ALEXANDRIA, VA 22313-1450, or by telephone at 571-272-0519 or by facsimile transmission at Office general facsimile number, 571-273-8300.

Marianne C. Seidel
Quality Assurance Specialist
Technology Center 1600

UNITED STATES PATENT AND TRADEMARK OFFICE

UNITED STATES DEPARTMENT OF COMMERCE
United States Patent and Trademark Office
Address: COMMISSIONER FOR PATENTS
P.O. Box 1450
Alexandria, Virginia 22313-1450
www.uspto.gov

BIRCH STEWART KOLASCH & BIRCH
PO BOX 747
FALLS CHURCH, VA 22040-0747

Mail Date: 04/21/2010

Applicant	: Hiroyuki Akai	: DECISION ON REQUEST FOR
Patent Number	: 7614110	: RECALCULATION of PATENT
Issue Date	: 11/10/2009	: TERM ADJUSTMENT IN VIEW
Appliction No	: 10/521,961	: OF WYETH AND NOTICE OF INTENT TO
Filed	: 09/28/2005	: ISSUE CERTIFICATE OF CORRECTION
		:

The Request for Recalculation is **GRANTED** to the extent indicated.

The patent term adjustment has been determined to be **1078** days. The USPTO will *sua sponte* issue a certificate of correction reflecting the amount of PTA days determined by the recalculation.

Prior to the issuance of the certificate of correction, the USPTO will afford patentee an opportunity to be heard and request reconsideration. Accordingly, patentee has **one month or thirty (30) days**, whichever is longer, to file a request for reconsideration of this patent term adjustment calculation. See 35 U.S.C. 154(b)(3)(B)(ii) and 37 CFR 1.322(a)(4). No extensions of time will be granted under 37 CFR 1.136.

Patentee should use document code PET.OP if electronically filing a request for reconsideration of this patent term adjustment calculation. The patentee must also include the information required by 37 CFR 1.705(b)(2) and the fee required by 37 CFR 1.18(e). If patentee does not file a timely request for reconsideration of this patent term adjustment calculation including the information required by 37 CFR 1.705(b)(2) and the fee required by 37 CFR 1.18(e), the USPTO will issue a certificate of correction reflecting the PTA determination noted above.

Patentee should be aware that in order to preserve the right to review in the United States District Court for the District of Columbia of the USPTO patent term adjustment determination, patentee must ensure that he or she also take the steps required under 35 U.S.C. 154(b)(4)(A) in a timely manner. Nothing in the request for recalculation should be construed as providing an alternative time frame for commencing a civil action under 35 U.S.C. 154(b)(4)(A).

Any questions concerning this decision should be directed to the Office of Patent Legal Administration at 571-272-7702.

28 MAR 2006

#7

UNITED STATES PATENT AND TRADEMARK OFFICE

Commissioner for Patents
United States Patent and Trademark Office
P.O. Box 1450
Alexandria, VA 22313-1450
www.uspto.gov

WIGGIN AND DANA LLP
ATTENTION: PATENT DOCKETING
ONE CENTURY TOWER, P.O. BOX 1832
NEW HAVEN CT 06508-1832

In re Application of ZHOU et al. Application No.: 10/521,973 PCT No.: PCT/CA03/01189 Int. Filing: 08 August 2003 Priority Date: 16 August 2002 Attorney Docket No.: 102699-102 For: PHOSPHONIUM AND IMIDAZOLIUM SALTS AND METHODS OF THEIR PREPARATION	DECISION ON PETITION UNDER 37 CFR 1.47(a)

This is a decision on applicant's petition under 37 CFR 1.47(a), filed in the United States Patent and Trademark Office (USPTO) on 15 September 2005, to accept the application without the signature of joint inventor, Yuehui Zhou.

BACKGROUND

On 21 January 2005, applicant filed a transmittal letter (PTO-1390) requesting entry into the national stage in the United States of America under 35 U.S.C. § 371. Filed with the Transmittal Letter was, *inter alia*, the requisite basic national fee.

On 11 July 2005, a Notification of Missing Requirements (FORM PCT/DO/EO/905) was mailed to applicant indicating *inter alia*, that an oath or declaration in accordance with 37 CFR 1.497(a) and (b) and the surcharge for filing the oath or declaration after the thirty month period was required.

On 16 September 2005, applicant filed the instant petition along with a declaration, executed by the joint inventors on behalf of the nonsigning inventor Yuehui Zhou. The petition under 37 CFR 1.47(a) in an attempt to satisfy the requirements of 35 U.S.C. 371(c)(4) requested the acceptance of the application without the signature of inventor, Yuehui Zhou alleging that Mr. Zhou cannot be found or reached to sign the application.

DISCUSSION

A petition under 37 CFR §1.47(a) must be accompanied by (1) the fee under 37 CFR §1.17(h), (2) factual proof that the non-signing joint inventor(s) refuses to execute the application or cannot be reached after diligent effort, (3) a statement of the last known address of the non-signing inventor(s), and (4) an oath or declaration by each available joint inventor on his or her own behalf and on behalf of the non-signing joint inventor(s).

The petition did not include the requisite $200 petition fee. However, authorization to charge applicant's deposit account for any additional fees was provided with the PTO-1390 and the petition fee was charged to that deposit account, satisfying Item (1). Item (3) is satisfied because the last known address of non-signing inventor, Yuehui Zhou, was provided. With regard to item (4), the declaration executed by the available joint inventors on their behalf and on behalf of the non-signing inventor was submitted and satisfies the requirements of 37 CFR 1.47(a).

With respect to Item (2) above, Petitioner provided a statement of facts in the petition under 37 CFR 1.47(a). Counsel states that various attempts, via mail, telephone and email, were made by others to contact Mr. Zhou. These attempts proved unsuccessful and counsel concludes that Mr. Zhou cannot be reached or located.

Where inability to find or reach a nonsigning inventor "after diligent effort" is the reason for filing under 37 CFR 1.47, a statement of facts should be submitted that fully describes the exact facts which are relied on to establish that a diligent effort was made. The fact that a nonsigning inventor is on vacation or out of town and is therefore temporarily unavailable to sign the declaration is not an acceptable reason for filing under 37 CFR 1.47. Furthermore, the fact that an inventor is hospitalized and/or is not conscious is not an acceptable reason for filing under 37 CFR 1.47. 37 CFR 1.43 may be available under these circumstances. See MPEP 409.02. Such a petition under 37 CFR 1.47 will be dismissed as inappropriate.

The statement of facts must be signed, where at all possible, by a *person having firsthand knowledge* of the facts recited therein. *Statements based on hearsay will not normally be accepted. Copies of documentary evidence such as internet searches, certified mail return receipts, cover letters of instructions, telegrams, that support a finding that the nonsigning inventor could not be found or reached should be made part of the statement.* The steps taken to locate the whereabouts of the nonsigning inventor should be included in the statement of facts. It is important that the statement contain facts as opposed to conclusions. See MPEP 409.03(d).

The facts relied upon in the instant case appear to have occurred between 17 November and 20 December 2004. An attempt by counsel to contact the nonsigning inventor occurred on 09 September 2005. Petitioner did not provide a first hand statement from the person having firsthand knowledge of the facts recited therein. Moreover, it is unclear whether Mr. Zhou was temporarily unavailable or is no longer available at his last known address to sign the application papers. Petitioner has not provide any evidence of further attempts made to obtain Mr. Zhou's current address, telephone number or email address by contacting his last employer or co-inventors or through a search of the Internet to locate him[1]. Petitioner should submit evidence of his diligent efforts to locate or reach the non-signing inventor before it can be concluded that Mr. Zhou cannot be reached or located.

In sum, Petitioner has satisfied Items (1), (3) and (4) above. However, Petitioner has not satisfied Item (2) by demonstrating: (1) a *bona fide* attempt was made to present a *copy of the application papers for U.S. application 10/521,973 (specification, including claims, drawings, and declaration)* to the nonsigning inventor for his signature or (2) the attempts to locate or reach Mr. Zhou despite diligent efforts.

For the reasons set forth above, the evidence submitted does not support a finding that the

---

[1]Applicant is reminded that he must provide proof of the attempts to deliver a complete copy of the application papers (specification, including claims, drawings, and oath or declaration) to the non-signing inventor.

nonsigning inventor refuses to sign the application at this time. Accordingly, it is inappropriate to accord the national stage application status under 37 CFR §1.47(a) at this time.

CONCLUSION

The petition under 37 CFR §1.47(a) is **DISMISSED WITHOUT PREJUDICE**.

Any reconsideration on the merits of the petition under 37 CFR §1.47(a) must be filed within TWO (2) MONTHS from the mail date of this decision. Any reconsideration request should include a cover letter entitled "Renewed Petition Under 37 CFR §1.47(a)." No petition fee is required. Any further extensions of time available may be obtained under 37 CFR 1.136(a).

Any further correspondence with respect to this matter should be addressed to the Mail Stop PCT, Commissioner for Patents, Office of PCT Legal Administration, P.O. Box 1450, Alexandria, Virginia 22313-1450, with the contents of the letter marked to the attention of the Office of PCT Legal Administration.

Cynthia M. Kratz
Attorney Advisor
PCT Legal Office
Office of PCT Legal Administration

Telephone: (571) 272-3286
Facsimile (571) 272-0459

BEST AVAILABLE COPY

19 JUL 2006

#9

UNITED STATES PATENT AND TRADEMARK OFFICE

Commissioner for Patents
United States Patent and Trademark Office
P.O. Box 1450
Alexandria, VA 22313-1450
www.uspto.gov

WIGGIN AND DANA LLP
ATTENTION: PATENT DOCKETING
ONE CENTURY TOWER, P.O. BOX 1832
NEW HAVEN CT 06508-1832

In re Application of ZHOU et al. Application No.: 10/521,973 PCT No.: PCT/CA03/01189 Int. Filing: 08 August 2003 Priority Date: 16 August 2002 Attorney Docket No.: 102699-102 For: PHOSPHONIUM AND IMIDAZOLIUM SALTS AND METHODS OF THEIR PREPARATION	DECISION ON PETITION UNDER 37 CFR 1.47(a)

This is a decision on applicant's petition under 37 CFR 1.47(a), filed in the United States Patent and Trademark Office (USPTO) on 15 September 2005, to accept the application without the signature of joint inventor, Yuehui Zhou.

BACKGROUND

On 21 January 2005, applicant filed a transmittal letter (PTO-1390) requesting entry into the national stage in the United States of America under 35 U.S.C. § 371. Filed with the Transmittal Letter was, *inter alia*, the requisite basic national fee.

On 11 July 2005, a Notification of Missing Requirements (FORM PCT/DO/EO/905) was mailed to applicant indicating *inter alia*, that an oath or declaration in accordance with 37 CFR 1.497(a) and (b) and the surcharge for filing the oath or declaration after the thirty month period was required.

On 16 September 2005, applicant filed the instant petition along with a declaration, executed by the joint inventors on behalf of the nonsigning inventor Yuehui Zhou. The petition under 37 CFR 1.47(a) in an attempt to satisfy the requirements of 35 U.S.C. 371(c)(4) requested the acceptance of the application without the signature of inventor, Yuehui Zhou alleging that Mr. Zhou cannot be found or reached to sign the application.

On 28 March 2006, a decision dismissing applicant's petition was mailed indicating that Petitioner had not demonstrated that a *bona fide* attempt was made to present a copy of the application papers for U.S. application 10/521,973 (specification, including claims, drawings, and declaration) to the nonsigning inventor for his signature or what attempts to locate or reach Mr. Zhou were conducted.

On 18 July 2006, Petitioner filed a renewed petition along with a declaration executed by Mr. Zhou. The renewed petition under 37 CFR 1.47(a) is considered moot as a declaration executed by the previously unavailable inventor has now been submitted and is acceptable under 37 CFR 1.497(a) and (b).

For the above reasons, the renewed petition under 37 CFR 1.47(a) is considered **MOOT**. The declaration executed by the joint inventor and submitted on 18 July 2006 is in compliance with 37 CFR 1.497(a) and (b) and is acceptable.

This application is being forwarded to United States Designated/Elected Office for further processing. The 35 U.S.C. 371(c)(1), (c)(2) and (c)(4) date is **18 July 2006**.

Cynthia M. Kratz

Cynthia M. Kratz
Attorney Advisor
PCT Legal Office
Office of PCT Legal Administration

Telephone: (571) 272-3286
Facsimile (571) 273-0459

BEST AVAILABLE COPY

UNITED STATES PATENT AND TRADEMARK OFFICE

UNITED STATES DEPARTMENT OF COMMERCE
United States Patent and Trademark Office
Address: COMMISSIONER FOR PATENTS
P.O. Box 1450
Alexandria, Virginia 22313-1450
www.uspto.gov

CYTEC INDUSTRIES INC.
1937 WEST MAIN STREET
P.O. BOX 60
STAMFORD, CT 06904-0060

Mail Date: 04/28/2010

Applicant	: Yuehui Zhou	: DECISION ON REQUEST FOR
Patent Number	: 7638636	: RECALCULATION of PATENT
Issue Date	: 12/29/2009	: TERM ADJUSTMENT IN VIEW
Application No	: 10/521,973	: OF WYETH AND NOTICE OF INTENT TO
Filed	: 07/18/2006	: ISSUE CERTIFICATE OF CORRECTION
		:

The Request for Recalculation is **GRANTED** to the extent indicated.

The patent term adjustment has been determined to be **743** days. The USPTO will *sua sponte* issue a certificate of correction reflecting the amount of PTA days determined by the recalculation.

Prior to the issuance of the certificate of correction, the USPTO will afford patentee an opportunity to be heard and request reconsideration. Accordingly, patentee has **one month or thirty (30) days**, whichever is longer, to file a request for reconsideration of this patent term adjustment calculation. See 35 U.S.C. 154(b)(3)(B)(ii) and 37 CFR 1.322(a)(4). No extensions of time will be granted under 37 CFR 1.136.

Patentee should use document code PET.OP if electronically filing a request for reconsideration of this patent term adjustment calculation. The patentee must also include the information required by 37 CFR 1.705(b)(2) and the fee required by 37 CFR 1.18(e). If patentee does not file a timely request for reconsideration of this patent term adjustment calculation including the information required by 37 CFR 1.705(b)(2) and the fee required by 37 CFR 1.18(e), the USPTO will issue a certificate of correction reflecting the PTA determination noted above.

Patentee should be aware that in order to preserve the right to review in the United States District Court for the District of Columbia of the USPTO patent term adjustment determination, patentee must ensure that he or she also take the steps required under 35 U.S.C. 154(b)(4)(A) in a timely manner. Nothing in the request for recalculation should be construed as providing an alternative time frame for commencing a civil action under 35 U.S.C. 154(b)(4)(A).

Any questions concerning this decision should be directed to the Office of Patent Legal Administration at 571-272-7702.

UNITED STATES PATENT AND TRADEMARK OFFICE

Commissioner for Patents
United States Patent and Trademark Office
P.O. Box 1450
Alexandria, VA 22313-1450
www.uspto.gov

SCHLUMBERGER OILFIELD SERVICES
200 GILLINGHAM LANE
MD 200-9
SUGAR LAND TX 77478

COPY MAILED

SEP 1 0 2007

OFFICE OF PETITIONS

In re Application of :
Fabien CENS et al. :
Application No. 10/521,975 :
Filed: January 21, 2005 :
Attorney Docket No. 21.1087 :

ON PETITION

This is a decision on the petition under 37 CFR 1.137(b), filed July 25, 2007, to revive the above-identified application.

The petition is **DISMISSED**.

Any request for reconsideration of this decision must be submitted within TWO (2) MONTHS from the mail date of this decision. Extensions of time under 37 CFR 1.136(a) are permitted. The reconsideration request should include a cover letter entitled "Renewed Petition under 37 CFR 1.137(b)." This is **not** a final agency action within the meaning of 5 U.S.C. § 704.

The above-identified application became abandoned for failure to reply to the non-final Office action mailed November 24, 2006, which set a shortened statutory period for reply of three (3) months. No extensions of time under the provisions of 37 CFR 1.136(a) were obtained. Accordingly, the above-identified application became abandoned on February 25, 2007.

A grantable petition under 37 CFR 1.137(b) must be accompanied by: (1) the required reply, unless previously filed; (2) the petition fee as set forth in 37 CFR 1.17(m); (3) a statement that the entire delay in filing the required reply from the due date for the reply until the filing of a grantable petition pursuant to 37 CFR 1.137(b) was unintentional; and (4) any terminal disclaimer (and fee as set forth in 37 CFR 1.20(d)) required by 37 CFR 1.137(d). Where there is a question as to whether either the abandonment or the delay in filing a petition under 37 CFR 1.137 was unintentional, the Commissioner may require additional information. See MPEP 711.03(c)(III)(C) and (D). The instant petition lacks item(s) (2). Petitioner has not submitted the required peition fee of $1500 set forth in 37 CFR 1.17(m).

Further correspondence with respect to this matter should be addressed as follows:

By Mail: Mail Stop PETITION
Commissioner for Patents
P. O. Box 1450
Alexandria, VA 22313-1450

By hand: U. S. Patent and Trademark Office
Customer Service Window, Mail Stop Petitions
Randolph Building
401 Dulany Street
Alexandria, VA 22314

The centralized facsimile number is **(571) 273-8300.**

Telephone inquiries concerning this decision should be directed to Brian Sines at (571) 272-6051 or in his absence, the undersigned at (571) 272-7099.

David Buĉi
Petitions Examiner
Office of Petitions

UNITED STATES PATENT AND TRADEMARK OFFICE

Commissioner for Patents
United States Patent and Trademark Office
P.O. Box 1450
Alexandria, VA 22313-1450
www.uspto.gov

SCHLUMBERGER OILFIELD SERVICES
200 GILLINGHAM LANE
MD 200-9
SUGAR LAND TX 77478

COPY MAILED

NOV 0 2 2007

OFFICE OF PETITIONS

In re Application of	:	
Fabien CENS et al.	:	
Application No. 10/521,975	:	DECISION ON PETITION
Filed: January 21, 2005	:	
Attorney Docket No. 21.1087	:	

This is a decision on the renewed petition under 37 CFR 1.137(b), filed September 14, 2007, to revive the above-identified application.

The petition is **GRANTED**.

The above-identified application became abandoned for failure to reply to the non-final Office action mailed November 24, 2006, which set a shortened statutory period for reply of three (3) months. No extensions of time under the provisions of 37 CFR 1.136(a) were obtained. Accordingly, the above-identified application became abandoned on February 25, 2007.

The petition satisfies the conditions for revival pursuant to the provisions of 37 CFR 1.137(b) in that (1) the reply in the form of an amendment; (2) the petition fee of $1500; and (3) the required statement of unintentional delay have been received. Accordingly, the reply to the non-final Office action of November 24, 2006 is accepted as having been unintentionally delayed.

Telephone inquiries concerning this decision should be directed to Brian Sines at (571) 272-6051 or in his absence, the undersigned at (571) 272-7099.

The application file is being referred to Technology Center AU 3745 for appropriate action on the concurrently filed response.

David Bucci
Petitions Examiner
Office of Petitions

UNITED STATES PATENT AND TRADEMARK OFFICE

Commissioner for Patents
United States Patent and Trademark Office
P.O. Box 1450
Alexandria, VA 22313-1450
www.uspto.gov

BOZICEVIC, FIELD & FRANCIS LLP
1900 UNIVERSITY AVENUE
SUITE 200
EAST PALO ALTO, CA 94303

COPY MAILED

MAY 0 1 2009

OFFICE OF PETITIONS

In re Application of	:	
CHUNG, Hensson et al.	:	
Application No. 10/521,989	:	DECISION ON PETITION
Filed: November 03, 2005	:	TO WITHDRAW
Attorney Docket No. **4696-0110PUS1**	:	FROM RECORD

This is a decision on the Request to Withdraw as attorney or agent of record under 37 C.F.R. § 1.36(b), filed December 10, 2008.

The request is not approved because it is **moot**.

A review of the file record indicates that the power of attorney to BOZICEVIC, FIELD & FRANCIS LLP has been revoked by the assignee of the patent application on December 29, 2008. Accordingly, the request to withdraw under 37 C.F.R. § 1.36(b) is moot.

All future communications from the Office will continue to be directed to the below-listed address until otherwise notified by applicant.

Telephone inquires concerning this decision should be directed to Tredelle Jackson at 571-272-2783.

Tredelle D. Jackson
Paralegal Specialist
Office of Petitions

cc: **BIRCH STEWART KOLASCH & BIRCH**
PO BOX 747
FALLS CHURCH VA 22040-0747

SPE RESPONSE FOR CERTIFICATE OF CORRECTION

Paper No.: _____

DATE: 3/23/09

TO SPE OF: ART UNIT ~~2449~~ 2465

SUBJECT: Request for Certificate of Correction for Appl. No.: 10/521999 Patent No.: 7486614 B2

Please respond to this request for a certificate of correction within 7 days.

FOR IFW FILES:

Please review the requested changes/corrections as shown in the COCIN document(s) in the IFW application image. No new matter should be introduced, nor should the scope or meaning of the claims be changed.

Please complete the response (see below) and forward the completed response to scanning using document code COCX.

FOR PAPER FILES:

Please review the requested changes/corrections as shown in the attached certificate of correction. Please complete this form (see below) and forward it with the file to:

Certificates of Correction Branch (CofC)
South Tower - 9A22
Palm Location 7580

Virginia Tolbert
Certificates of Correction Branch
703-308-9390 ext. 113

Thank You For Your Assistance

The request for issuing the above-identified correction(s) is hereby:

Note your decision on the appropriate box.

- [x] Approved — All changes apply.
- [ ] Approved in Part — Specify below which changes do not apply.
- [ ] Denied — State the reasons for denial below.

Comments: _____

SPE

2465
Art Unit

U.S. DEPARTMENT OF COMMERCE Patent and Trademark Office

PTOL-308 (REV. 7/03)

04 AUG 2005

#5

UNITED STATES PATENT AND TRADEMARK OFFICE

COMMISSIONER FOR PATENTS
UNITED STATES PATENT AND TRADEMARK OFFICE
P.O. BOX 1450
ALEXANDRIA, VA 22313-1450
www.uspto.gov

Rabinder N. Narula
Knobbe Martens Olson & Bear, LLP
2040 Main Street
Fourteenth Floor
Irvine, CA 92614

In re Application of	:	
JORNEUS et al.	:	
Application No.: 10/522,002	:	DECISION ON PETITION
PCT No.: PCT/SE03/00899	:	UNDER 37 CFR 1.137(b)
Int. Filing Date: 04 June 2003	:	
Priority Date: 27 June 2002	:	
Attorney Docket No.: NOBELB.207NP	:	
For: SPACER PREFERABLY MADE ENTIRELY OF CERAMIC AND WITH AN ADAPTER		

The petition to revive under 37 CFR 1.137(b) filed 13 January 2005 in the above-captioned application is hereby **GRANTED** as follows:

Applicant's statement that "the entire delay in filing the required reply from the due date for the reply until the filing of a grantable petition under 37 CFR 1.137(b) was unintentional" meets the requirements of 37 CFR 1.137(b)(3).

A review of the application file reveals that applicant has submitted the basic national fee and the requirements of 37 CFR 1.137(b) have been satisfied. Therefore, the request to revive the application abandoned under 35 U.S.C. 371(d) is granted as to the National stage in the United States of America.

This application is being forwarded to the United States Designated/Elected Office (US/DO/EO) for continued processing including the issuance of a Notification of Missing Requirements (Form PCT/DO/EO/905) indicating that an oath or declaration is required.

Anthony Smith
Attorney-Advisor
Office of PCT Legal Administration
Telephone: (571) 272-3298
Facsimile: (571) 273-0459

UNITED STATES PATENT AND TRADEMARK OFFICE

Commissioner for Patents
United States Patent and Trademark Office
P.O. Box 1450
Alexandria, VA 22313-1450
www.uspto.gov

MCDONNELL BOEHNEN HULBERT @ BERGHOFF LLP
300 SOUTH WACKER DRIVE
SUITE 3100
CHICAGO IL 60606

COPY MAILED

DEC 15 2009

OFFICE OF PETITIONS

In re Patent No. 7,576,074	:	DECISION ON REQUEST FOR
Rice et al.	:	RECONSIDERATION OF
Issue Date: August 18, 2009	:	PATENT TERM ADJUSTMENT
Application No. 10/522,004	:	AND NOTICE OF INTENT TO ISSUE
Filed: April 11, 2005	:	CERTIFICATE OF CORRECTION
Docket No.02-420-H	:	

This is in response to the PETITION FOR RECONSIDERATION OF PATENT TERM ADJUSTMENT FILED UNDER 37 C.F.R § 1.705(d), filed August 21, 2009. Patentees request that the determination of patent term adjustment for the above-identified patent be corrected from four hundred seventy-five (475) days to one thousand twenty-seven (1,027) days.

The request for reconsideration of the patent term adjustment indicated in the patent is **GRANTED** to the extent indicated herein.

Patentees are given **THIRTY (30) DAYS or ONE (1) MONTH, whichever is longer**, from the mail date of this decision to respond. No extensions of time will be granted under 37 CFR 1.136.

The patent term adjustment indicated on the patent is to be corrected by issuance of a certificate of correction showing a revised Patent Term Adjustment of **560 days**.

On August 18, 2009, the above-identified application matured into U.S. Patent No. 7,576,074. The patent issued with a revised patent term adjustment of 475 days. The present request for reconsideration of patent term adjustment was timely filed on

August 21, 2009, within two months of the issue date of the patent. See 37 CFR 1.705(d).

Patentees request recalculation of the patent term adjustment based on the decision in Wyeth v. Dudas, 580 F. Supp. 2d 138, 88 U.S.P.Q. 2d 1538 (D.D.C. 2008). Patentees aver that the correct number of days of Patent Term Adjustment is 1,027 days under the court's interpretation of the overlap provision as set forth in Wyeth v. Dudas, 580 F. Supp. 2d 138, 88 U.S.P.Q. 2d 1538 (D.D.C. 2008). Patentees assert that pursuant to Wyeth, a PTO delay under 35 U.S.C. 154(b)(1)(A) overlaps with a delay under 35 U.S.C. 154(b)(1)(B) only if the delays "occur on the same day." Patentees maintain that the total non-overlapping PTO delay under 35 U.S.C. 154(b)(1)(A) (465 days) and 35 U.S.C. 154(b)(1)(B) (581 days) is 1,047 days as these periods do not occur on the same day. Further, given the applicant delay of 19 days, patentees assert entitlement to 1,027 (1,047 - 19) days of patent term adjustment.

Patentees also assert that Office used an incorrect date in calculating the over three delay under 35 U.S.C. 154(b)(1)(B)and specifically state:

> The B delay is the number of days an application was pending beyond 3 years…The B delay period begins the day after 3 years after the national stage commenced, which is January 16, 2008. So, the B delay is the period from January 16, 2008, to the issue date, August 18, 2009, or 581 days.
>
> In the Office's PTA calculation, it appears the B delay was calculated based on the 35 USC § 371(c) date rather than the 35 USC § 371(b) date. The Patent Office calculated the B delay starting from April 12, 2008 (3 years plus one day after the § 371(c) date) and ending August 18, 2009 (the issue date, thus arriving at 494 days rather than 581 days.

Excerpt taken from "Petition for Reconsideration of Patent Term Adjustment Filed Under 37 CFR § 1.705(d)", filed August 21, 2009, p. 2.

At the outset, a review of the record indicates that neither the Office, nor patentees, used the 35 U.S.C. 371(b) national stage commencement date of January 17, 2005, in calculating the period of adjustment under 37 CFR 1.703(b). While is noted that the date that was thirty months from the priority date of July 15, 2002, was January 15, 2005, it is also noted that

January 15, 2005, was a Saturday. Relative to applications filed under 37 CFR 371(b), when the date that is thirty months from the priority date—which would ordinarily be the date the national stage commenced under 35 U.S.C. 371(b)--falls on a weekend, the date of commencement shifts to the next business day. In this instance, the next business day was Monday January 17, 2005. Accordingly, the date the national stage commenced under 35 U.S.C. 371(b) is January 17, 2005. As stated in 37 CFR 1.703(b), the period of adjustment under § 1.702(b) is the number of days in the period beginning on the day after the date that is three years after the date on which the application was filed under 35 U.S.C. 111(a) or the national stage commenced under 35 U.S.C. 371(b) in an international application and ending on the day before the filing of the request for continued examination (not including any other periods excluded under 35 U.S.C. 154(b)(1)(B)(i)-(iii)).

Pursuant to 37 CFR 1.703(b), the period of adjustment under 37 CFR 1.702(b)[1] is 579 days, counting the number of days beginning on the day after the date that is three years after the date on which the national stage commenced under 35 U.S.C. 371(b), January 18, 2008, and ending on August 18, 2009, the day the patent issued.

As to patentees' interpretation of the period of overlap, the Office finds it inconsistent with the Office's interpretation of the overlap provision, 35 U.S.C. 154(b)(2)(A). 35 U.S.C. 154(b)(2)(A) limits the adjustment of patent term, as follows:

> to the extent that the periods of delay attributable to grounds specified in paragraph (1) overlap, the period of any adjustment granted under this subsection shall not exceed the actual number of days the issuance of the patent was delayed.

---

[1] Pursuant to 35 U.S.C. 154(b)(1)(B), 37 CFR 1.702(b) provides, in pertinent part, that:

Failure to issue a patent within three years of the actual filing date of the application. Subject to the provisions of 35 U.S.C. 154(b) and this subpart, the term of an original patent shall be adjusted if the issuance of the patent was delayed due to the failure of the Office to issue a patent within three years after the date on which the application was filed under 35 U.S.C. 111(a) or the national stage commenced under 35 U.S.C. 371(b) or (f) in an international application[.]

As explained in *Explanation of 37 CFR 1.703(f)*[2] *and of the United States Patent and Trademark Office Interpretation of 35 U.S.C. 154(b)(2)(A)*, 69 Fed. Reg. 34283 (June 21, 2004), the Office interprets 35 U.S.C. 154(b)(2)(A) as permitting either patent term adjustment under 35 U.S.C. 154(b)(1)(A)(i)-(iv), or patent term adjustment under 35 U.S.C. 154(b)(1)(B), but not as permitting patent term adjustment under both 35 U.S.C. 154(b)(1)(A)(i)-(iv) and 154(b)(1)(B). Accordingly, the Office implements the overlap provision as follows:

> If an application is entitled to an adjustment under 35 U.S.C. 154(b)(1)(B), the entire period during which the application was pending (except for periods excluded under 35 U.S.C. 154(b)(1)(B)(i)-(iii)), and not just the period beginning three years after the actual filing date of the application, is the period of delay under 35 U.S.C. 154(b)(1)(B) in determining whether periods of delay overlap under 35 U.S.C. 154(b)(2)(A). Thus, any days of delay for Office issuance of the patent more than 3 years after the filing date of the application, which overlap with the days of patent term adjustment accorded prior to the issuance of the patent will not result in any additional patent term adjustment. See 35 U.S.C. 154(b)(1)(B), 35 U.S.C. 154(b)(2)(A), and 37 CFR § 1.703(f). See *Changes to Implement Patent Term Adjustment Under Twenty Year Term; Final Rule*, 65 Fed. Reg. 56366 (Sept. 18, 2000). See also *Revision of Patent Term Extension and Patent Term Adjustment Provisions; Final Rule*, 69 Fed. Reg. 21704 (April 22, 2004), 1282 Off. Gaz. Pat. Office 100 (May 18, 2004). See also *Explanation of 37 CFR 1.703(f) and of the United States Patent and Trademark Office Interpretation of 35 U.S.C. 154(b)(2)(A)*, 69 Fed. Reg. 34283 (June 21, 2004).

Further, as stated in the *Explanation of 37 CFR 1.703(f) and of the United States Patent and Trademark Office Interpretation of 35 U.S.C. 154(b)(2)(A)*, the Office has consistently taken the position that if an application is entitled to an adjustment under

---

[2] Likewise, 37 CFR 1.703(f) provides that:

> To the extent that periods of delay attributable to the grounds specified in § 1.702 overlap, the period of adjustment granted under this section shall not exceed the actual number of days the issuance of the patent was delayed.

the three-year pendency provision of 35 U.S.C. 154(b)(1)(B), the entire period during which the application was pending before the Office (except for periods excluded under 35 U.S.C. 154(b)(1)(B)(i)-(iii)), and not just the period beginning three years after the actual filing date of the application, is the relevant period under 35 U.S.C. 154(b)(1)(B) in determining whether periods of delay "overlap" under 35 U.S.C. 154(b)(2)(A).

This interpretation is consistent with the statute. Taken together the statute and rule provide that to the extent that periods of delay attributable to grounds specified in 35 U.S.C. 154(b)(1) and in corresponding 37 CFR 1.702 overlap, the period of adjustment granted shall not exceed the actual number of days the issuance of the patent was delayed.

In this instance, the relevant period under 35 U.S.C. 154(b)(1)(B) in determining whether periods of delay "overlap" under 35 U.S.C. 154(b)(2)(A) is the period during which the application was pending before the Office, January 17, 2005, the date of commenced under 35 U.S.C 371(b), to August 18, 2009, the day the patent issued.

Pursuant to 35 U.S.C. 154(b)(1)(A) and 37 CFR 1.702(a)(1) and (a)(2)[3], 466 days of patent term adjustment were accorded during the pendency of the application for Office delay prior to the issuance of the patent. Pursuant to 35 U.S.C. 154(b)(1)(B) and 37 CFR 1.702(b)[4], 579 days of patent term adjustment accrued for Office issuance of the patent more than three years after the date the national stage commenced under 35 U.S.C. 371(b).

The 579 days of patent term adjustment under 37 CFR 1.702(b) overlap with the 466 days of patent term adjustment under 37 CFR 1.702(a)(1) and (a)(2). Entry of both the 579 days and the 466 days is neither permitted nor warranted. 579 days is the actual number of days issuance of the patent was delayed. Accordingly, the period adjustment of 28 days will be removed and the additional period of adjustment of 113 days will be entered for the Office for failing to issue the patent within three years.

---

[3] A restriction requirement was mailed on September 19, 2007, fourteen months and 465 days after the date of completion of all 35 U.S.C. 371 requirements on April 11, 2005. On October 28, 2008, a final Office action was mailed, 4 months and 1 day after a response was filed on June 27, 2008.

[4] The application was pending three years and 579 days.

In view thereof, the patent term adjustment indicated on the patent should be 560 days.

The Office acknowledges the submission of the $200.00 fee set forth in 37 CFR 1.18(e). No additional fees are required.

The application file is being forwarded to the Certificates of Correction Branch for issuance of a certificate of correction in order to rectify this error. The Office will issue a certificate of correction indicating that the term of the above-identified patent is extended or adjusted by 560 days.

Telephone inquiries regarding this matter should be directed to Kenya A. McLaughlin, Petitions Attorney, at (571) 272-3222.

C. T. Donnell

Christina Tartera Donnell
Senior Petitions Attorney
Office of Petitions

Enclosure: Copy of DRAFT Certificate of Correction

DRAFT COPY

UNITED STATES PATENT AND TRADEMARK OFFICE

CERTIFICATE OF CORRECTION

PATENT : 7,576,074 B2

DATED : Aug. 18, 2009

INVENTOR(S) : Rice, et al.

It is certified that error appears in the above-identified patent and that said Letters Patent is hereby corrected as shown below:

On the cover page,

[*] Notice: Subject to any disclaimer, the term of this patent is extended or adjusted under 35 USC 154(b) by (475) days

Delete the phrase "by 475 days" and insert – by 560 days--

UNITED STATES PATENT AND TRADEMARK OFFICE

Commissioner for Patents
United States Patent and Trademark Office
P.O. Box 1450
Alexandria, VA 22313-1450
www.uspto.gov

MCDONNELL BOEHNEN HULBERT @ BERGHOFF LLP
300 SOUTH WACKER DRIVE
SUITE 3100
CHICAGO IL 60606

MAILED

APR 13 2010

OFFICE OF PETITIONS

In re Patent No. 7,576,074	: DECISION ON REQUEST
Rice, et al.	: FOR
Issue Date: August 18, 2009	: RECONSIDERATION OF
Application No. 10/522,004	: PATENT TERM ADJUSTMENT
Filed: April 11, 2005	: and
Atty Docket No. 02-420-H	: NOTICE OF INTENT TO ISSUE
	: CERTIFICATE OF CORRECTION

This is a decision on the petition filed on January 13, 2010, which is being treated as a petition under 37 CFR 1.705(d) requesting that the patent term adjustment indicated on the above-identified patent be corrected to indicate that the term of the above-identified patent is extended or adjusted by one thousand, twenty five (1,025) days.

The petition to correct the patent term adjustment indicated on the above-identified patent to indicate that the term of the above-identified patent is extended or adjusted by one thousand, twenty five (1,025) days is **GRANTED**.

Deposit account 13-2490 will be charged $200.00 for the fee set forth in 37 CFR 1.18(e). No additional fees are required.

The application is being forwarded to the Certificates of Corrections Branch for issuance of a certificate of correction. The Office will issue a certificate of correction indicating that the term of the above-identified patent is extended or adjusted by **one thousand, twenty five (1,025) days**.

Telephone inquiries specific to this matter should be directed to the undersigned at (571) 272-3222.

Kenya A. McLaughlin
Petitions Attorney
Office of Petitions

Enclosure: Copy of DRAFT Certificate of Correction

DRAFT COPY

UNITED STATES PATENT AND TRADEMARK OFFICE

CERTIFICATE OF CORRECTION

PATENT : 7,576,074 B2

DATED : Aug. 18, 2009

INVENTOR(S) : Rice, et al.

It is certified that error appears in the above-identified patent and that said Letters Patent is hereby corrected as shown below:

On the cover page,

[*] Notice: Subject to any disclaimer, the term of this patent is extended or adjusted under 35 USC 154(b) by (475) days

Delete the phrase "by 475 days" and insert – by 1025 days--

02 AUG 2005

UNITED STATES PATENT AND TRADEMARK OFFICE

#6

COMMISSIONER FOR PATENTS
UNITED STATES PATENT AND TRADEMARK OFFICE
P.O. BOX 1450
ALEXANDRIA, VA 22313-1450
www.uspto.gov

Tarek N. Fahmi
BLAKELY, SOKOLOFF, TAYLOR & ZAFMAN LLP
12400 WILSHIRE BOULEVARD, 7TH FLOOR
LOS ANGELES, CA 90025

In re Application of O'DWYER
Application No.: 10/522,009
PCT Application No.: PCT/AU02/01504
Int. Filing Date: 11 November 2002
Priority Date Claimed: 19 November 2001
Attorney Docket No.: 7081P005
For: BELT-FED MACHNE GUN

DECISION ON PETITION
UNDER 37 CFR 1.137(b)

Applicants' "Petition For Revival Under 37 CFR 1.137(b)," filed in the United States Patent and Trademark Office on 14 January 2005 is **GRANTED**.

BACKGROUND

On 11 November 2002, applicants filed international application PCT/AU02/01504. The international application claims a priority date of 19 November 2001 and designates the United States. A copy of the international application was communicated to the United States Patent and Trademark Office from the International Bureau on 30 May 2003. The deadline for paying the basic national fee in the United States is thirty months from the priority date, that is 19 May 2004. The application became abandoned at midnight 19 May 2004 for failure to pay the national basic fee.

On 14 January 2005, applicants filed the instant petition for revival accompanied by, *inter alia*, a transmittal letter for entry into the US national stage under 35 U.S.C. 371, the requisite basic national fee as required by 35 U.S.C. 371(c)(1), a copy of the international application as required by 35 U.S.C. 371(c)(2), an executed declaration as required by 35 U.S.C. 371(c)(4), and the petition fee of $1500.

DISCUSSION

A petition to revive an abandoned application under 37 CFR 1.137(b) must be filed without intentional delay from the time the application became abandoned and/or applicant first became aware of the abandoned status of the application. A petition under 37 CFR 1.137(b) must be accompanied by (1) a proper reply, (2) a statement that the entire delay in filing the required reply from the due date for the reply until the filing of a grantable petition was unintentional, (3) the petition fee required by law, and (4) a terminal disclaimer and fee (if the international application was filed prior to June 8, 1995). A payment of the basic national fee constitutes a proper reply for entry into the national stage.

Applicant's statement in the petition that "the entire delay in filing the required reply from the due date for the required reply until the filing of a grantable petition under 37 CFR 1.137(b) was unintentional" satisfies the requirements of 37 CFR 1.137(b)(3). The submission of the national fee and the copy of the international application satisfies 37 CFR 1.137(b)(1). The payment of the petition fee satisfies the requirement under 37 CFR 1.137(b)(2). A terminal disclaimer is not required because the application was filed on or after 08 June 1995. Therefore, the requirements for a grantable petition under 37 CFR 1.137(b) have been satisfied.

CONCLUSION

The petition to revive the application abandoned under 37 CFR 1.137(b) is **GRANTED** as to the National Stage in the United States of America.

Applicant has satisfied the requirements under 35 U.S.C. 371.

The application has an international filing date of 11 November 2002 under 35 U.S.C. 363 and a date of 14 January 2005 under 35 U.S.C. 371(c)(1), (c)(2) and (c)(4). The application is being returned to the National Stage Processing Division of the Office of PCT Operations for continued processing.

Helen Kwok
PCT Legal Administration Detailee
Telephone: 571-272-6095
Facsimile: 571-273-0459

Leonard Smith
PCT Legal Examiner
Office of PCT Legal Administration

UNITED STATES PATENT AND TRADEMARK OFFICE

Commissioner for Patents
United States Patent and Trademark Office
P.O. Box 1450
Alexandria, VA 22313-1450
www.uspto.gov

GAMBURD LAW GROUP LLC
600 WEST JACKSON BLVD.
SUITE 625
CHICAGO, IL 60661

COPY MAILED

SEP 04 2008

OFFICE OF PETITIONS

In re Application of
CRITOPH, Robert E. et al.
Application No. 10/522,030
Filed: January 21, 2005
Attorney Docket No. **1096-009US01**

DECISION ON PETITION TO WITHDRAW FROM RECORD

This is a decision on the Request to Withdraw as attorney or agent of record under 37 C.F.R. § 1.36(b), filed June 04, 2008.

The request is not approved because it is **moot**.

A review of the file record indicates that the power of attorney to GAMBURD LAW GROUP LLC has been revoked by the assignee of the patent application on June 10, 2008. Accordingly, the request to withdraw under 37 C.F.R. § 1.36(b) is moot.

All future communications from the Office will continue to be directed to the below-listed address until otherwise notified by applicant.

Telephone inquires concerning this decision should be directed to Tredelle Jackson at 571-272-2783.

Tredelle D. Jackson
Paralegal Specialist
Office of Petitions

cc: **SHUMAKER & SIEFFERT, P. A.**
1625 RADIO DRIVE
SUITE 300
WOODBURY MN 55125

UNITED STATES PATENT AND TRADEMARK OFFICE

UNITED STATES DEPARTMENT OF COMMERCE
United States Patent and Trademark Office
Address: COMMISSIONER FOR PATENTS
P.O. Box 1450
Alexandria, Virginia 22313-1450
www.uspto.gov

SHUMAKER & SIEFFERT, P. A.
1625 RADIO DRIVE
SUITE 300
WOODBURY, MN 55125

Mail Date: 04/20/2010

Applicant	: Robert Edward Critoph	: DECISION ON REQUEST FOR
Patent Number	: 7578143	: RECALCULATION of PATENT
Issue Date	: 08/25/2009	: TERM ADJUSTMENT IN VIEW
Appliction No	: 10/522,030	: OF WYETH AND NOTICE OF INTENT TO
Filed	: 01/21/2005	: ISSUE CERTIFICATE OF CORRECTION
		:

The Request for Recalculation is **GRANTED** to the extent indicated.

The patent term adjustment has been determined to be **1098** days. The USPTO will *sua sponte* issue a certificate of correction reflecting the amount of PTA days determined by the recalculation.

Prior to the issuance of the certificate of correction, the USPTO will afford patentee an opportunity to be heard and request reconsideration. Accordingly, patentee has **one month or thirty (30) days**, whichever is longer, to file a request for reconsideration of this patent term adjustment calculation. See 35 U.S.C. 154(b)(3)(B)(ii) and 37 CFR 1.322(a)(4). No extensions of time will be granted under 37 CFR 1.136.

Patentee should use document code PET.OP if electronically filing a request for reconsideration of this patent term adjustment calculation. The patentee must also include the information required by 37 CFR 1.705(b)(2) and the fee required by 37 CFR 1.18(e). If patentee does not file a timely request for reconsideration of this patent term adjustment calculation including the information required by 37 CFR 1.705(b)(2) and the fee required by 37 CFR 1.18(e), the USPTO will issue a certificate of correction reflecting the PTA determination noted above.

Patentee should be aware that in order to preserve the right to review in the United States District Court for the District of Columbia of the USPTO patent term adjustment determination, patentee must ensure that he or she also take the steps required under 35 U.S.C. 154(b)(4)(A) in a timely manner. Nothing in the request for recalculation should be construed as providing an alternative time frame for commencing a civil action under 35 U.S.C. 154(b)(4)(A).

Any questions concerning this decision should be directed to the Office of Patent Legal Administration at 571-272-7702.

UNITED STATES PATENT AND TRADEMARK OFFICE

Commissioner for Patents
United States Patent and Trademark Office
P.O. Box 1450
Alexandria, VA 22313-1450
www.uspto.gov

NIXON & VANDERHYE, PC
901 NORTH GLEBE ROAD, 11TH FLOOR
ARLINGTON, VA 22203

MAILED

APR 24 2009

OFFICE OF PETITIONS

In re Application of	:	
Nalin et al.	:	DECISION ON PETITION
Application No. 10/522,037	:	TO WITHDRAW
Filed: April 18, 2005	:	FROM RECORD
Attorney Docket No. BJS-3665-131	:	

This is a decision on the Request to Withdraw as attorney or agent of record under 37 C.F.R. § 1.36(b), filed March 13, 2009.

The request is **DISMISSED** as moot.

A review of the file record indicates that on April 2, 2009 the power of attorney to Nixon & Vanderhye, PC was revoked by the assignee of the patent application. Accordingly, the request to withdraw under 37 C.F.R. § 1.36(b) is moot.

Currently, there are no outstanding Office actions that require a reply from the applicant.

All future communications from the Office will be directed to the below-listed address until otherwise notified by applicant.

Telephone inquires concerning this decision should be directed to Petitions Examiner Joan Olszewski at 571-272- 3206. All other inquires concerning either the examination or status of the application should be directed to the Technology Center.

/Liana Walsh/
LianaWalsh
Petitions Examiner
Office of Petitions

cc: SALIWANCHIK LLOYD & SALIWANCHIK
A PROFESSIONAL ASSOCIATION
PO Box 142950
GAINESVILLE FL 32614

1 7 OCT 2007

UNITED STATES PATENT AND TRADEMARK OFFICE

COMMISSIONER FOR PATENTS
UNITED STATES PATENT AND TRADEMARK OFFICE
P.O. BOX 1450
ALEXANDRIA, VA 22313-1450
www.uspto.gov

HAYNES AND BOONE, LLP
901 MAIN STREET
SUITE 3100
DALLAS, TX 75202-3789

In re Application of COSTA et al	:	
U.S. Application No.: 10/522,039	:	
PCT Application No.: PCT/US2003/019993	:	
Int. Filing Date: 24 June 2003	:	
Priority Date Claimed: 19 July 2002	:	DECISION
Attorney Docket No.: 25791.106.02	:	
For: PROTECTIVE SLEEVE FOR THREADED	:	
CONNECTIONS FOR EXPANDABLE	:	
LINER HANGER	:	

This is in response to applicant's "Petition Under 37 C.F.R. § 1.182" filed 27 August 2007.

BACKGROUND

On 24 June 2003, applicant filed international application PCT/US2003/019993, which claimed priority of an earlier United States application filed 19 July 2002. The thirty-month period for paying the basic national fee in the United States expired on 19 January 2005.

On 19 January 2005, applicant filed national stage papers in the United States Designated/Elected Office (DO/EO/US). The submission was accompanied by, *inter alia*, the basic national fee required by 35 U.S.C. 371(c)(1) and a substitute specification.

On 18 April 2006, applicant's deposit account was debited for excess claim fees.

On 27 August 2007, applicant filed the present petition under 37 CFR 1.182.

DISCUSSION

A review of international application PCT/US2003/019993 reveals that the application contained 253 claims. A proper amendment reducing the number of claims was never submitted in the international application.

MPEP 1893.01(c) states in relevant part,

> A preliminary amendment accompanying the initial national stage submission under 35 U.S.C. 371 that cancels claims and/or eliminates multiple dependent claims will be effective to reduce the number of claims to be considered in calculating extra claim fees required under 37 CFR 1.492**>(d)-(e)< and/or eliminate the multiple dependent claim fee required under 37 CFR 1.492*>(f)<. A subsequently filed amendment canceling claims and/or eliminating multiple dependent claims will not entitle applicant to a refund of fees previously paid. See MPEP § 607 and § 608. (Emphasis added.)

In the present case, although applicant may have sought to reduce the number of claims for examination at the time of national stage entry, the initial national stage submission on 19 January 2005 did not include a proper preliminary amendment. Therefore, the properly formatted yet subsequently filed amendment of 27 August 2007 does not entitle applicant to a refund of the previously paid excess claim fees. The petition fails to make a sufficient showing that a miscarriage of justice would occur if the Office adheres to the requirement plainly set forth in MPEP 1893.01(c) and noted above.

CONCLUSION

For the reasons above, the petition under 37 CFR 1.182 is DISMISSED without prejudice.

If reconsideration on the merits of the petition is desired, a proper response must be filed within TWO (2) MONTHS from the mail date of this decision. Extensions of time are available under 37 CFR 1.136(a). Any reconsideration request should include a cover letter entitled "Renewed Petition Under 37 CFR 1.182".

Please direct further correspondence with respect to this matter to Mail Stop PCT, Commissioner for Patents, Office of PCT Legal Administration, P.O. Box 1450, Alexandria, Virginia 22313-1450, with the contents of the letter marked to the attention of the Office of PCT Legal Administration.

Bryan Lin

Bryan Lin
PCT Legal Examiner
PCT Legal Office

10/17/2007 SBASHEIR 00000012 081394 10522039
Sale Ref: 00000012 DA#: 081394 10522039
01 FC:1462 400.00 DA

Telephone: 571-272-3303
Facsimile: 571-273-0459

UNITED STATES PATENT AND TRADEMARK OFFICE

UNITED STATES DEPARTMENT OF COMMERCE
United States Patent and Trademark Office
Address: COMMISSIONER FOR PATENTS
P.O. Box 1450
Alexandria, Virginia 22313-1450
www.uspto.gov

ANDRUS, SCEALES, STARKE & SAWALL, LLP
100 EAST WISCONSIN AVENUE, SUITE 1100
MILWAUKEE, WI 53202

Mail Date: 04/21/2010

Applicant	: Deliang Zhang	: DECISION ON REQUEST FOR
Patent Number	: 7585457	: RECALCULATION of PATENT
Issue Date	: 09/08/2009	: TERM ADJUSTMENT IN VIEW
Appliction No	: 10/522,054	: OF WYETH AND NOTICE OF INTENT TO
Filed	: 08/29/2005	: ISSUE CERTIFICATE OF CORRECTION
		:

The Request for Recalculation is **GRANTED** to the extent indicated.

The patent term adjustment has been determined to be **495** days. The USPTO will *sua sponte* issue a certificate of correction reflecting the amount of PTA days determined by the recalculation.

Prior to the issuance of the certificate of correction, the USPTO will afford patentee an opportunity to be heard and request reconsideration. Accordingly, patentee has **one month or thirty (30) days**, whichever is longer, to file a request for reconsideration of this patent term adjustment calculation. See 35 U.S.C. 154(b)(3)(B)(ii) and 37 CFR 1.322(a)(4). No extensions of time will be granted under 37 CFR 1.136.

Patentee should use document code PET.OP if electronically filing a request for reconsideration of this patent term adjustment calculation. The patentee must also include the information required by 37 CFR 1.705(b)(2) and the fee required by 37 CFR 1.18(e). If patentee does not file a timely request for reconsideration of this patent term adjustment calculation including the information required by 37 CFR 1.705(b)(2) and the fee required by 37 CFR 1.18(e), the USPTO will issue a certificate of correction reflecting the PTA determination noted above.

Patentee should be aware that in order to preserve the right to review in the United States District Court for the District of Columbia of the USPTO patent term adjustment determination, patentee must ensure that he or she also take the steps required under 35 U.S.C. 154(b)(4)(A) in a timely manner. Nothing in the request for recalculation should be construed as providing an alternative time frame for commencing a civil action under 35 U.S.C. 154(b)(4)(A).

Any questions concerning this decision should be directed to the Office of Patent Legal Administration at 571-272-7702.

UNITED STATES PATENT AND TRADEMARK OFFICE

UNITED STATES DEPARTMENT OF COMMERCE
United States Patent and Trademark Office
Address: COMMISSIONER FOR PATENTS
P.O. Box 1450
Alexandria, Virginia 22313-1450
www.uspto.gov

APPLICATION NO.	FILING DATE	FIRST NAMED INVENTOR	ATTORNEY DOCKET NO.	CONFIRMATION NO.
10/522,068	01/21/2005	Haydn N.G. Wadley	3053.138.US	7584

26474 7590 09/22/2008
NOVAK DRUCE DELUCA + QUIGG LLP
1300 EYE STREET NW
SUITE 1000 WEST TOWER
WASHINGTON, DC 20005

EXAMINER
AUSTIN, AARON

ART UNIT	PAPER NUMBER
1794	

MAIL DATE	DELIVERY MODE
09/22/2008	PAPER

Please find below and/or attached an Office communication concerning this application or proceeding.

The time period for reply, if any, is set in the attached communication.

UNITED STATES PATENT AND TRADEMARK OFFICE

Commissioner for Patents
United States Patent and Trademark Office
P.O. Box 1450
Alexandria, VA 22313-1450
www.uspto.gov

wk

9/22/08

Mailed :
In re Application of
Haydn N.G. Wadleyl
Serial No. 10/522,068
Filed: January 21, 2005
For: Method For Manufacture Of Cellular Materials And Structures For Blast and Impact Mitigation And Resulting Structure

DECISION ON PETITION

This is a decision on the PETITION FILED UNDER 37 CFR 1.144 TO WITHDRAW THE RESTRICTION REQUIREMENT made January 10, 2007.

On January 10, 2007 the Examiner made a restriction requirement between claims 1-35 directed to a structure and claims 36-39 directed to a method of constructing the structure as set forth in claims 1-35. The examiner asserts that the inventions listed as Groups I (claims 1-35) and II (claims 36-39) do not relate to a single general inventive concept under PCT Rule 13.1 because under PCT Rule 13.2, they lack the same or corresponding special technical feature. On May 9, 2007, applicant elected Group I, claims 1-35 with traverse

Applicant argues that fewer than 37 CFR 1.475(b), a national stage application containing claims to different categories of invention will be considered to have a unity of invention if the claims are drawn only to a product and a process specially adapted to the manufacture of said product. Applicant asserts that claims 1-35 and claims 36-39 are related as a product and a process for manufacturing the product respectively.

DECISION

The instant application has been filed under 35 U.S.C. 371 as a national phase application and as such is subject to the unity requirements set out in PCT Rules 13.1 – 13.4 and 37 CFR 1.475, as well as the PCT Administrative Instructions, Annex B. The PCT Administrative Instructions, Annex B, Part 1 at (b) state that "the special technical features" common to all groupings of inventions shall be defined, as in PCT Rule 13.2, to mean,

> "those technical features which each of the claimed inventions, **considered as a whole, makes over the prior art.**" (Emphasis added)

In the instant case, the description and the claims set forth the special technical feature of a structure and method of constructing a structure (see claims 1 and 36). However, the special technical feature(s) of an array of cellular housings and at least one cellular core disposed in at least a substantial number of the cellular housings has been shown, at pages 4-7 of the office action mailed August 8, 2007, to not make (be) a contribution over the prior art of Geyer (US Patent No. 4,453,367), Colvin (US Patent No. 6,418,832). Therefore, the examiner's finding that there is a lack of unity of invention between the groups as set forth in the restriction requirement was correct. The reason for such being that the groups constitute additional inventions not sharing a "special technical relationship" within the meaning of PCT Rule 13.2 since the identified "special technical feature" does not make a contribution over the prior art.

Accordingly, the petition is **DENIED.**

JMStone

Jacqueline M. Stone, Director
Technology Center 1700
Chemical and Materials Engineering

Vincent M. DeLuca
Novak, Druce, DeLuca & Quigg LLP
1300 I Street, N.W., Suite 1000 West Tower
Washington, DC 2005

17 FEB 2009

UNITED STATES PATENT AND TRADEMARK OFFICE

Commissioner for Patents
United States Patent and Trademark Office
P.O. Box 1450
Alexandria, VA 22313-1450
www.uspto.gov

NOVAK DRUCE DELUCA + QUIGG LLP
1300 EYE STREET NW
SUITE 1000 WEST TOWER
WASHINGTON DC 20005

In re Application of	:	
WADLEY	:	DECISION
Application No.: 10/522,068	:	
PCT No.: PCT/US2003/023043	:	
Int. Filing Date: 23 July 2003	:	
Priority Date: 25 July 2002	:	
Attorney's Docket No.: 3053.138.US	:	
For: METHOD FOR MANUFACTURE OF CELLULAR	:	
MATERIALS AND STRUCTURES FOR BLAST AND	:	
IMPACT MITIGATION AND RESULTING	:	
STRUCTURE	:	

This is a decision from the Office of PCT Legal Administration in response to applicant's "REQUEST FOR RECONSIDERATION/REVIEW OF DECISION ON PETITION FROM RESTRICTION REQUIREMENT UNDER 37 CFR § 1.144"filed in the United States Patent and Trademark Office (USPTO) on 26 September 2008.

BACKGROUND

On 23 July 2003, applicant filed international application PCT/US2003/023043, which designated the United States and claimed a priority date of 25 July 2002. A copy of the international application was communicated to the USPTO from the International Bureau on 05 February 2004. The thirty-month period for paying the basic national fee in the United States expired at midnight on 25 January 2005.

On 21 January 2005, applicant filed a submission for entry into the national stage in the United States which was accompanied by, *inter alia*, the U.S. Basic National Fee and a declaration of the inventor.

On 28 July 2005, the USPTO mailed a NOTIFICATION OF ACCEPTANCE OF APPLICATION UNDER 35 U.S.C. 371 (Form PCT/DO/EO/903) according a 371(c)(1), (c)(2), and (c)(4) date of 21 January 2005.

On 10 January 2007, an Office action was mailed setting forth a lack of unity requirement between Groups I and II.

On 09 May 2007, applicant filed a "Response to Restriction and Election Requirement Under 35 U.S.C. § 1.121" electing Group I with traverse. Applicants urged that the common technical feature provided a contribution over the prior art.

On 08 August 2007, an Office action was mailed addressing applicant's traversal and making the lack of unity requirement final.

On 10 December 2007, applicant filed a response again traversing the lack of unity requirement.

On 25 March 2008, an Office action was mailed again addressing applicant's traversal and making the lack of unity requirement final.

On 26 June 2008, applicant filed a "PETITION FROM RESTRICTION REQUIREMENT UNDER 37 CFR § 1.144".

On 22 September 2008, a decision was mailed indicating that the restriction requirement between Groups I and II was maintained and that the petition was denied.

On 26 September 2008, applicant filed the instant "REQUEST FOR RECONSIDERATION/REVIEW OF DECISION ON PETITION FROM RESTRICTION REQUIREMENT UNDER 37 CFR § 1.144".

On 15 October 2008, a Final Office action was mailed.

DISCUSSION

Unity of invention (not restriction) practice is applicable in national stage applications submitted under 35 U.S.C. 371. MPEP § 1893.03(d). During the national stage as a Designated or Elected Office under 35 U.S.C. 371, PCT Rules 13.1 and 13.2 will be followed when considering unity of invention claims. MPEP § 1850, item I.

PCT Rule 13.1 states

> The international application shall relate to one invention only or to a group of inventions so linked as to form a single general inventive concept ("requirement of unity of invention").

PCT Rule 13.2 states

> Where a group of inventions is claimed in one and the same international application, the requirement of unity of invention referred to in Rule 13.1 shall be fulfilled only when there is a technical relationship among those inventions involving one or more of the same or corresponding special technical features. The expression "special technical features" shall mean those technical features that define a contribution which each of the claimed inventions, considered as a whole, makes over the prior art.

As noted in the decision mailed 26 September 2008 and the Office action mailed 10 January 2007, the examiner set forth the Lack of Unity requirement as follows:

> Group I, claims 1-35, drawn to a structure.
> Group II, claims 36-39, drawn to a method of constructing a structure.

The groups were indicated as lacking unity of invention because the common technical feature failed to provide a contribution over the prior art.

Applicant urges that 37 CFR 1.475(b) precludes the restriction requirement. 37 CFR 1.475(b) states in relevant part:

> An international or a national stage application containing claims to different categories of invention will be considered to have unity of invention if the claims are drawn only to one of the following combinations of categories:
>
> 1) A product and a process specially adapted for the manufacture of said product; . . .

Although 37 CFR 1.475(b)(1) indicates that a national stage application containing claims to different categories of invention will be considered to have unity if the claims are drawn to a product and a process specially adapted for the manufacture of said product, this illustration is only an "interpretation[] of and not an exception to the requirements of PCT Rule 13.1". MPEP § 1850, item III, second full paragraph. Examples are set out in Chapter 10 of the International Search and Preliminary Examination Guidelines. Paragraph 10.21 of the Guidelines clearly illustrates that if the common technical feature among the product and process is known in the art, unity is lacking.

> 10.21 Example 1
>
> Claim 1: A method of manufacturing chemical substance X.
> Claim 2: Substance X.
> Claim 3: The (method of) use of substance X as an insecticide.
>
> Unity exists between claims 1, 2, and 3. The special technical feature common to all the claims is substance X. However, **if substance X is known in the art, unity would be lacking because there would not be a special technical feature common to all the claims.** (emphasis added)

CONCLUSION

For the reasons set forth above, applicants' petition under 37 CFR 1.181 is **DISMISSED** without prejudice.

The period for reply set forth in the Final Office action mailed 15 October 2008 continues to run.

Any further correspondence with respect to this matter may be filed electronically via EFS-Web or if mailed should be addressed to Mail Stop PCT, Commissioner for Patents, Office of PCT Legal Administration, P.O. Box 1450, Alexandria, Virginia 22313-1450, with the contents of the letter marked to the attention of the Office of PCT Legal Administration.

/Daniel Stemmer/

Daniel Stemmer
Legal Examiner
PCT Legal Affairs
Office of Patent Cooperation Treaty
Legal Administration
Telephone: (571) 272-3301

UNITED STATES PATENT AND TRADEMARK OFFICE

UNITED STATES DEPARTMENT OF COMMERCE
United States Patent and Trademark Office
Address: COMMISSIONER FOR PATENTS
P.O. Box 1450
Alexandria, Virginia 22313-1450
www.uspto.gov

RIM/FINNEGAN
901 New York Avenue NW
Washington, DC 20001

Mail Date: 04/20/2010

Applicant	: Robert J. Lowles	: DECISION ON REQUEST FOR
Patent Number	: 7650348	: RECALCULATION of PATENT
Issue Date	: 01/19/2010	: TERM ADJUSTMENT IN VIEW
Appliction No	: 10/522,079	: OF WYETH AND NOTICE OF INTENT TO
Filed	: 01/21/2005	: ISSUE CERTIFICATE OF CORRECTION
		:

The Request for Recalculation is **GRANTED** to the extent indicated.

The patent term adjustment has been determined to be **440** days. The USPTO will *sua sponte* issue a certificate of correction reflecting the amount of PTA days determined by the recalculation.

Prior to the issuance of the certificate of correction, the USPTO will afford patentee an opportunity to be heard and request reconsideration. Accordingly, patentee has **one month or thirty (30) days**, whichever is longer, to file a request for reconsideration of this patent term adjustment calculation. See 35 U.S.C. 154(b)(3)(B)(ii) and 37 CFR 1.322(a)(4). No extensions of time will be granted under 37 CFR 1.136.

Patentee should use document code PET.OP if electronically filing a request for reconsideration of this patent term adjustment calculation. The patentee must also include the information required by 37 CFR 1.705(b)(2) and the fee required by 37 CFR 1.18(e). If patentee does not file a timely request for reconsideration of this patent term adjustment calculation including the information required by 37 CFR 1.705(b)(2) and the fee required by 37 CFR 1.18(e), the USPTO will issue a certificate of correction reflecting the PTA determination noted above.

Patentee should be aware that in order to preserve the right to review in the United States District Court for the District of Columbia of the USPTO patent term adjustment determination, patentee must ensure that he or she also take the steps required under 35 U.S.C. 154(b)(4)(A) in a timely manner. Nothing in the request for recalculation should be construed as providing an alternative time frame for commencing a civil action under 35 U.S.C. 154(b)(4)(A).

Any questions concerning this decision should be directed to the Office of Patent Legal Administration at 571-272-7702.

UNITED STATES PATENT AND TRADEMARK OFFICE

Commissioner for Patents
United States Patent and Trademark Office
P.O. Box 1450
Alexandria, VA 22313-1450
www.uspto.gov

NXP BV
NXP INTELLECTUAL PROPERTY & LICENSING
M/S41-SJ
1109 MCKAY DRIVE
SAN JOSE CA 95131

MAILED
JUL 20 2009
OFFICE OF PETITIONS

In re Application of	:	
Panades, et al.	:	
Application No. 10/522,084	:	ON PETITION
Filed: January 21, 2005	:	
Attorney Docket No. FR02 0076 US	:	

This is a decision on the petition to revive under 37 CFR 1.137(b), filed June 9, 2009.

The petition under 37 CFR 1.137(b) is **GRANTED**.

The above-identified application became abandoned for failure to timely file a reply in response to the final Office action, mailed September 16, 2008. This Office action set a shortened statutory period for reply of three months. Applicant filed an Amendment on November 17, 2008. However, in an Advisory Action mailed on December 1, 2008, the Examiner informed Applicant that the Amendment did not place the application in condition for allowance. Accordingly, the application became abandoned on December 17, 2008. The mailing of this decision precedes the mailing of a Notice of Abandonment.

With the instant petition, applicant paid the petition fee, made the proper statement of unintentional delay, and filed the required reply in the form of an RCE.

The application is being forwarded to Group Art Unit 2193 for consideration of the RCE, filed June 9, 2009.

Telephone inquiries related to this decision should be directed to the undersigned at (571)272-3207.

Cliff Congo
Petitions Attorney
Office of Petitions

UNITED STATES PATENT AND TRADEMARK OFFICE

Commissioner for Patents
United States Patent and Trademark Office
P.O. Box 1450
Alexandria, VA 22313-1450
www.uspto.gov

COPY MAILED

SEP 29 2009

OFFICE OF PETITIONS

FISH & RICHARDSON PC
P.O. BOX 1022
MINNEAPOLIS MN 55440-1022

In re Patent No. 7,517,965	:	LETTER REGARDING PATENT
Koga et al.	:	TERM ADJUSTMENT AND
Issue Date: April 14, 2009	:	NOTICE OF INTENT TO ISSUE
Application No. 10/522,086	:	CERTIFICATE OF CORRECTION
Filed: October 5, 2005	:	
Attorney Docket No. 14875-138US1/	:	
C1-A0214P-US	:	

This is in response to the "APPLICATION FOR PATENT TERM ADJUSTMENT UNDER 37 CFR §1.705(d)," filed June 11, 2009, requesting that the patent term adjustment determination for the above-identified patent be changed from two hundred sixty-eight (268) days to seven hundred sixteen(716) days.

The request for reconsideration of patent term adjustment is **GRANTED** to the extent indicated herein.

The patent term adjustment indicated in the patent is to be corrected by issuance of a certificate of correction showing a revised Patent Term Adjustment of **three hundred fifty-six (356) days**.

Patentees are given THIRTY (30) DAYS or ONE (1) MONTH, whichever is longer, from the mail date of this decision to respond to this decision. No extensions of time will be granted under § 1.136.

On April 14, 2009, the above-identified application matured into U.S. Patent No. 7,517,965 with a patent term adjustment of 268 days.

This request for reconsideration of patent term adjustment was timely filed within two months of the issue date of the patent. See 1.705(d).

The Office acknowledges receipt of the $200.00 fee set forth in 37 CFR 1.18(e). No additional fees are required.

Patentees request recalculation of the patent term adjustment based on the decision in Wyeth v. Dudas, 580 F. Supp. 2d 138, 88 U.S.P.Q. 2d 1538 (D.D.C. 2008). Patentees assert that pursuant to Wyeth, a PTO delay under §154(b)(1)(A) overlaps with a delay under §154(b)(1)(B) only if the delays "occur on the same day." Patentees maintain that the period of adjustment due to the Three Year Delay by the Office, pursuant to 37 CFR § 1.703(b), of 448 days and the period of adjustment due to examination delay, pursuant to 37 CFR §1.702(a), of 360 days do not overlap, as these periods do not occur on the same day.

Patentees argue that the period of adjustment due to the Three Year Delay by the Office, pursuant to 37 CFR § 1.702(b), is 448 days. Patentees correctly assert that the Three Year Delay period is triggered by the application's commencement date. The commencement date is 30 months from the priority date claimed in the international application, or earlier. The priority date claimed in the international application is July 22, 2002. Thirty months from that date is January 22, 2005, which is the beginning of the Three Year Delay period. Accordingly, the period of adjustment under § 1.702(b) is 448 days, counting the number of days beginning on January 23, 2008 and ending on April 14, 2009 when the patent issued.

Patentees assert that in addition to the three year delay period, they are entitled to a period of adjustment due to examination delay, pursuant to 37 CFR §1.702(a)(1) of 360 days for the failure by the Office to mail at least one of a notification under 35 U.S.C. 132 not later than fourteen months after the date the application fulfilled the requirements of 35 U.S.C. 371 in an international application, pursuant to § 1.702(a)(1). A restriction requirement was mailed on November 20, 2007, which was 14 months and 360 days after the § 371 fulfillment date.

Under 37 CFR § 1.703(f), Patentees are entitled to a period of patent term adjustment equal to the period of delays based on the grounds set forth in 37 CFR §1.702 reduced by the period of time equal to the period of time during which Patentees failed to engage in reasonable efforts to conclude prosecution pursuant to 37 CFR §1.704. In other words, the period of Office delay reduced by the period of applicant delay. The period of

reduction of 92 days for applicant delay is not in dispute. Patentees assert that the total period of Office delay is the sum of the period of Three Year Delay (448 days per patentees' calculation) and the period of Examination Delay (360 days, not in dispute) **to the extent that these periods of delay are not overlapping.**

Patentees contend there is no overlap.

As such, patentees assert entitlement to a patent term adjustment of 716 days (448 per patentees' calculation +360 reduced by 0 overlap -92 for applicant delay).

As discussed above, the Office states that the patent issued 3 years and 448 days after the application's commencement date. The Office agrees that the action detailed above was not taken within the specified time frames, and thus, the entry of period of adjustment of 360 days is correct. At issue is whether Patentees should accrue 448 (adjusted for overlap, per patentees' definition of overlap and patentees' calculation of the Three Year Delay Period) days of patent term adjustment for the Office taking in excess of three years to issue the patent, as well as, 360 days for Office failure to take a certain action within a specified time frame (or examination delay).

The Office contends that the 360 days of examination delay pursuant to 37 CFR §1.702(a) overlap with the 488 days of delay in issuance of the patent pursuant to §1.702(b). The Office's interpretation is consistent with patentees' alternative determination of "B Delay" set forth on Page 7/8 of the application. Patentees' first interpretation of the period of overlap has been considered and found to be incorrect. Patentees' calculation of the period of overlap is inconsistent with the Office's interpretation of this provision. 35 U.S.C. 154(b)(2)(A) limits the adjustment of patent term, as follows:

> to the extent that the periods of delay attributable to grounds specified in paragraph (1) overlap, the period of any adjustment granted under this subsection shall not exceed the actual number of days the issuance of the patent was delayed.

Likewise, 37 CFR 1.703(f) provides that:

> To the extent that periods of delay attributable to the grounds specified in §1.702 overlap, the period of adjustment granted under this section shall not exceed the actual number of days the issuance of the patent was delayed.

As explained in *Explanation of 37 CFR 1.703(f) and of the United States Patent and Trademark Office Interpretation of 35 U.S.C. 154(b)(2)(A)*, 69 Fed. Reg. 34283 (June 21, 2004), the Office interprets 35 U.S.C. 154(b)(2)(A) as permitting either patent term adjustment under 35 U.S.C. 154(b)(1)(A)(i)-(iv), or patent term adjustment under 35 U.S.C. 154(b)(1)(B), but not as permitting patent term adjustment under both 35 U.S.C. 154(b)(1)(A)(i)-(iv) and 154(b)(1)(B). Accordingly, the Office implements the overlap provision as follows:

> If an application is entitled to an adjustment under 35 U.S.C. 154(b)(1)(B), the entire period during which the application was pending (except for periods excluded under 35 U.S.C. 154(b)(1)(B)(i)-(iii)), and not just the period beginning three years after the actual filing date of the application, is the period of delay under 35 U.S.C. 154(b)(1)(B) in determining whether periods of delay overlap under 35 U.S.C. 154(b)(2)(A). Thus, any days of delay for Office issuance of the patent more than 3 years after the filing date of the application, which overlap with the days of patent term adjustment accorded prior to the issuance of the patent will not result in any additional patent term adjustment. See 35 U.S.C. 154(b)(1)(B), 35 U.S.C. 154(b)(2)(A), and 37 CFR § 1.703(f). See *Changes to Implement Patent Term Adjustment Under Twenty Year Term; Final Rule*, 65 Fed. Reg. 56366 (Sept. 18, 2000). See also *Revision of Patent Term Extension and Patent Term Adjustment Provisions; Final Rule*, 69 Fed. Reg. 21704 (April 22, 2004), 1282 Off. Gaz. Pat. Office 100 (May 18, 2004). See also *Explanation of 37 CFR 1.703(f) and of the United States Patent and Trademark Office Interpretation of 35 U.S.C. 154(b)(2)(A)*, 69 Fed. Reg. 34283 (June 21, 2004).

The current wording of § 1.703(f) was revised in response to the misinterpretation of this provision by a number of Patentees. The rule was slightly revised to more closely track the

corresponding language of 35 U.S.C. 154(b)(2)(A). The relevant portion differs only to the extent that the statute refers back to provisions of the statute whereas the rule refers back to sections of the rule. This was not a substantive change to the rule nor did it reflect a change of the Office's interpretation of 35 U.S.C. 154(b)(2)(A). As stated in the *Explanation of 37 CFR 1.703(f) and of the United States Patent and Trademark Office Interpretation of 35 U.S.C. 154(b)(2)(A)*, the Office has consistently taken the position that if an application is entitled to an adjustment under the three-year pendency provision of 35 U.S.C. 154(b)(1)(B), the entire period during which the application was pending before the Office (except for periods excluded under 35 U.S.C. 154(b)(1)(B)(i)-(iii)), and not just the period beginning three years after the actual filing date of the application, is the relevant period under 35 U.S.C. 154(b)(1)(B) in determining whether periods of delay "overlap" under 35 U.S.C. 154(b)(2)(A).

This interpretation is consistent with the statute. Taken together the statute and rule provide that to the extent that periods of delay attributable to grounds specified in 35 U.S.C. 154(b)(1) and in corresponding §1.702 overlap, the period of adjustment granted shall not exceed the actual number of days the issuance of the patent was delayed. The grounds specified in these sections cover the A) guarantee of prompt Patent and Trademark Office responses, B) guarantee of no more than 3 year application pendency, and C) guarantee or adjustments for delays due to interference, secrecy orders and appeals. A section by section analysis of 35 U.S.C. 154(b)(2)(A) specifically provides that:

> Section 4402 imposes limitations on restoration of term. In general, pursuant to [35 U.S.C.] 154(b)(2)(A)-(C), total adjustments granted for restorations under [35 U.S.C. 154](b)(1) are reduced as follows: (1) To the extent that there are multiple grounds for extending the term of a patent that may exist simultaneously (e.g., delay due to a secrecy order under [35 U.S.C.] 181 and administrative delay under [35 U.S.C.] 154(b)(1)(A)), the term should not be extended for each ground of delay but only for the actual number of days that the issuance of a patent was delayed; See 145 Cong. Rec. S14,718[1]

---

[1] The AIPA is title IV of the Intellectual Property and Communications Omnibus Reform Act of 1999 (S. 1948), which was incorporated and enacted as law as part of Pub. L. 106-113. The Conference Report for H.R. 3194, 106th Cong. 1st Sess. (1999), which resulted in Pub. L. 106-113,

As such, the period for over 3 year pendency does not overlap only to the extent that the actual dates in the period beginning three years after the commencement date overlap with the actual dates in the periods for failure of the Office to take action within specified time frames. In other words, consideration of the overlap does not begin three years after the commencement date of the application.

In this instance, the relevant period under 35 U.S.C. 154(b)(1)(B) in determining whether periods of delay "overlap" under 35 U.S.C. 154(b)(2)(A) is the entire period from the application's commencement date through the date it matured into Patent No. 7,517,965, January 22, 2005 to April 14, 2009. (There were no periods excluded under 35 U.S.C. 154(b)(1)(B)(i)-(iii)).

Therefore,88 days, not 0 days, of patent term adjustment should have been entered for the Three Year Delay period, since the period of delay of 448 days attributable to the delay in the issuance of the patent overlaps with the adjustments of 360 days attributable to the ground specified in § 1.702(a)(1). 448 days is determined to be the actual number of days that the issuance of the patent was delayed, considering the 448 days over three years and the 360 days of examination delay. Accordingly, 88 days (448 - 360) should have been entered at issuance for a total Office day of 448 days.

As such, patentees are entitled to a patent term adjustment of 356 days (360 days examination delay + 448 days Three Year delay reduced by 360 overlap - 92 days for applicant delay).

Accordingly, the patent term adjustment indicated in the patent is to be corrected by issuance of a certificate of correction showing a revised Patent Term Adjustment of three hundred fifty-six (356) days.

The application file is being forwarded to the Certificates of Correction Branch for issuance of a certificate of correction in order to rectify this error. The Office will issue a certificate of correction indicating that the term of the above-

---

does not contain any discussion (other than the incorporated language) of S. 1948. A section-by-section analysis of S. 1948, however, was printed in the Congressional Record at the request of Senator Lott, See 145 Cong. Rec. S14,708-26 (1999)(daily ed. Nov. 17, 1999).

identified patent is adjusted by three hundred fifty-six (356) days.

Telephone inquiries specific to this matter should be directed to Shirene Willis Brantley, Senior Petitions Attorney, at (571) 272-3230.

Alesia M. Brown
Senior Petitions Attorney
Office of the Deputy Commissioner
for Patent Examination Policy

ENCLOSURE: DRAFT CERTIFICATE OF CORRECTION

DRAFT

UNITED STATES PATENT AND TRADEMARK OFFICE

CERTIFICATE OF CORRECTION

PATENT : 7,517,965 B2

DATED : April 14, 2009

INVENTOR(S) : Takaki Koga et al.

It is certified that error appears in the above-identified patent and that said Letters Patent is hereby corrected as shown below:

On the cover page,

[*] Notice: Subject to any disclaimer, the term of this patent is extended or adjusted under 35 USC 154(b) by (268) days

Delete the phrase "by 268 days" and insert – by 356 days--

DRAFT

UNITED STATES PATENT AND TRADEMARK OFFICE

CERTIFICATE OF CORRECTION

PATENT : 7,517,965 B2

DATED : April 14, 2009

INVENTOR(S) : Takaki Koga et al.

It is certified that error appears in the above-identified patent and that said Letters Patent is hereby corrected as shown below:

On the cover page,

[*] Notice: Subject to any disclaimer, the term of this patent is extended or adjusted under 35 USC 154(b) by (268) days

Delete the phrase "by 268 days" and insert -- by 356 days--

UNITED STATES PATENT AND TRADEMARK OFFICE

Commissioner for Patents
United States Patent and Trademark Office
P.O. Box 1450
Alexandria, VA 22313-1450
www.uspto.gov

Michael Pollack
Edwards, Angell, Palmer & Dodge, LLP
Three Stamford Plaza
301 Tresser Boulevard
Stamford, CT 06901

COPY MAILED

DEC 03 2007

OFFICE OF PETITIONS

In re Application of: Franz Haimer
Application No. 10/522,088
Filed: January 21, 2005
Attorney Docket No. 62753(49388)

DECISION ON PETITION

This is a decision on the request under 37 CFR 3.81(b), filed November 6, 2007, to add the name of the assignee on the Fee(s) Transmittal form PTOL-85(b) by way of a certificate of correction in the patent to be issued from the above-identified application. This is also a decision on the request under 37 CFR 3.81(b), which is being treated as a petition under 37 CFR 1.182 to reprint the assignee's name on the front page of the Letters Patent.

The petition under 37 CFR 3.81(b) to add the assignee's name is **GRANTED**.

The petition under 37 CFR 1.182 to reprint the front page of the Letters Patent is **GRANTED**.

The request was accompanied by a certificate of correction (and fee) as required by 3.81(b). Further, Office assignment records reflect that Franz Haimer Maschinenbau KG is the assignee of record. Accordingly, as the request complies with the provisions of 37 CFR 3.81(b), it would be appropriate for a certificate of correction to be processed after issuance of this application into a patent.

Petitioner is advised that it is the practice of the U. S. Patent and Trademark Office (USPTO) to issue a certificate of correction to correct an error on the part of an application in those cases where the assignee or attorney data is incorrect or was inadvertently not provided at the time of payment of the issue fee or the inventor's name is misspelled or otherwise incorrect. Note 37 CFR 1.323 and MPEP 1482 (35 U.S.C. 255), which states:

> "Whenever a mistake of a clerical or typographical nature, or of minor character, which was not the fault of the Patent and Trademark Office, appears in a patent and a showing has been made that such mistake occurred in good faith, the Commissioner may, upon payment of the required fee, issue a certificate of correction, if the correction does not involve such changes in the patent as would constitute new matter or would require re-examination. Such patent, together with the certificate, shall have the same effect and

operation in law on the trial of actions for causes thereafter arising as if the same had been originally issued in such correct form."

In view of the above, and since the desired correction of the assignee's name can be effected by way of a certificate of correction, it is unnecessary to reprint the front page of the Letters Patent.

However the USPTO will reprint the front page of the Letters Patent if the following conditions are met:

1. Submission of a petition under 37 CFR 1.182
2. Payment of a $400 petition fee
3. Payment of a $100 fee to place a certificate of correction in the USPTO archives

As authorized in the present petition, the $400 petition fee has been charged to petitioner's deposit account.

Since petitioner has met the conditions noted above, the front page of the Letters Patent will be reprinted to include the assignee's name.

Petitioner is advised that the reprinted Letters Patent granted by this petition is the only one which will reflect the correction of the assignee's name on the front page. All other copies of the patent will reflect the correction of the assignee's name by the presence of a certificate of correction in Office records.

The file is being referred to the Certificates of Correction Branch for appropriate processing of a certificate of correction after issuance of this application into a patent and for reprinting the front page of the original Letters Patent.

Telephone inquiries concerning this decision should be directed to the undersigned at (571) 272-3226. Telephone inquiries regarding the reprinting of the front page of the Letters Patent should be directed to Krystal Paige in the Publishing Division at (703) 308-9250, Ext. 139.

Andrea Smith
Petitions Examiner
Office of Petitions

cc: Krystal Paige, South Tower, 8th Floor - Fax No. (571) 273-9756

UNITED STATES PATENT AND TRADEMARK OFFICE

UNITED STATES DEPARTMENT OF COMMERCE
United States Patent and Trademark Office
Address: COMMISSIONER FOR PATENTS
P.O. Box 1450
Alexandria, Virginia 22313-1450
www.uspto.gov

Robert D. Shedd
Patent Operations
Thomson Licensing LLC
P O Box 5312
Princeton, NJ 08543-5312

Mail Date: 04/21/2010

Applicant	: Carsten Herpel	: DECISION ON REQUEST FOR
Patent Number	: 7623573	: RECALCULATION of PATENT
Issue Date	: 11/24/2009	: TERM ADJUSTMENT IN VIEW
Appliction No	: 10/522,089	: OF WYETH AND NOTICE OF INTENT TO
Filed	: 01/21/2005	: ISSUE CERTIFICATE OF CORRECTION
		:

The Request for Recalculation is **GRANTED** to the extent indicated.

The patent term adjustment has been determined to be **1333** days. The USPTO will *sua sponte* issue a certificate of correction reflecting the amount of PTA days determined by the recalculation.

Prior to the issuance of the certificate of correction, the USPTO will afford patentee an opportunity to be heard and request reconsideration. Accordingly, patentee has **one month or thirty (30) days**, whichever is longer, to file a request for reconsideration of this patent term adjustment calculation. See 35 U.S.C. 154(b)(3)(B)(ii) and 37 CFR 1.322(a)(4). No extensions of time will be granted under 37 CFR 1.136.

Patentee should use document code PET.OP if electronically filing a request for reconsideration of this patent term adjustment calculation. The patentee must also include the information required by 37 CFR 1.705(b)(2) and the fee required by 37 CFR 1.18(e). If patentee does not file a timely request for reconsideration of this patent term adjustment calculation including the information required by 37 CFR 1.705(b)(2) and the fee required by 37 CFR 1.18(e), the USPTO will issue a certificate of correction reflecting the PTA determination noted above.

Patentee should be aware that in order to preserve the right to review in the United States District Court for the District of Columbia of the USPTO patent term adjustment determination, patentee must ensure that he or she also take the steps required under 35 U.S.C. 154(b)(4)(A) in a timely manner. Nothing in the request for recalculation should be construed as providing an alternative time frame for commencing a civil action under 35 U.S.C. 154(b)(4)(A).

Any questions concerning this decision should be directed to the Office of Patent Legal Administration at 571-272-7702.

28 SEP 2005

UNITED STATES PATENT AND TRADEMARK OFFICE

Commissioner for Patents
United States Patent and Trademark Office
P.O. Box 1450
Alexandria, VA 22313-1450
www.uspto.gov

WEINGARTEN, SCHURGIN, GAGNEBIN & LEBOVICI LLP
TEN POST OFFICE SQUARE
BOSTON MA 02109

In re Application of DROSCHEL et al. Serial No.: 10/522,093 PCT No.: PCT/EP03/08180 Int. Filing Date: 24 July 2003 Priority Date: 22 August 2002 Attorney's Docket No.: MBP-030XX For: METHOD FOR IMMOBILIZING HYDROGEL-FORMING POLYMERS ON POLYMER SUBSTRATE SURFACES	DECISION ON REQUEST FOR CORRECTED FILING RECEIPT

This decision is in response to applicant's request for corrected filing receipt filed in the United States Patent and Trademark Office (USPTO) on 24 August 2005. The petition requests a change in the title for the invention, which differs from the title as listed on the published International application.

BACKGROUND

On 24 July 2003, applicant filed international application No. PCT/EP03/08180 which claimed priority of an earlier German application filed 22 August 2002. A copy of the international application had been communicated earlier to the United States Patent and Trademark Office from the International Bureau on 01 April 2004. The published international application identified the title of the invention as "Method for Immobilizing Hydrogel Bonding Polymers on Polymer Substrate Surfaces".

On 21 January 2005, applicant filed a transmittal letter (PTO-1390) requesting entry into the national stage in the United States of America under 35 U.S.C. § 371. Filed with the Transmittal Letter was, *inter alia*, the requisite basic national fee and preliminary amendment to change the title of the invention. On the same date, applicant submitted an executed declaration.

On 26 July 2005, the United States Designated/Elected Office (DO/EO/US) mailed a Notification of Acceptance of Application under 35 U.S.C. 371 (Form PCT/DO/EO/903) and filing receipt.

On 24 August 2005, applicant filed, via facsimile in the USPTO, a Request for Corrected Filing Receipt, requesting a correction to the title of the invention.

DISCUSSION

On 21 January 2005, applicant filed an amendment to change the title of the invention to read: "Method For Immobilizing Hydrogel-Forming Polymers on Polymer Substrate Surfaces". The filing receipt mailed on 26 July 2005 indicated that the title of the invention was "Method for Immobilizing Hydrogel-Bonding Polymers on Polymer Substrate Surfaces" and thus, did not reflect the title as amended. Applicant requests correction of the title of the invention to "Method

For Immobilizing Hydrogel-Forming Polymers On Polymer Substrate Surfaces."

The filing receipt is corrected to properly identify the title and is enclosed.

CONCLUSION

For the reasons above, applicant's request for a corrected filing receipt is **GRANTED**.

This application is being forwarded to Group Art Unit 1773.

Cynthia M. Kratz
Attorney Advisor
PCT Legal Office

Telephone: (571) 272-3286
Facsimile:(571) 272-0459

Enclosure: Corrected Filing Receipt

UNITED STATES PATENT AND TRADEMARK OFFICE

UNITED STATES DEPARTMENT OF COMMERCE
United States Patent and Trademark Office
Address: COMMISSIONER FOR PATENTS
P.O. Box 1450
Alexandria, Virginia 22313-1450
www.uspto.gov

WEINGARTEN, SCHURGIN, GAGNEBIN & LEBOVICI LLP
TEN POST OFFICE SQUARE
BOSTON, MA 02109

Mail Date: 04/27/2010

Applicant	: Stefan Droschel	: DECISION ON REQUEST FOR
Patent Number	: 7572489	: RECALCULATION of PATENT
Issue Date	: 08/11/2009	: TERM ADJUSTMENT IN VIEW
Application No	: 10/522,093	: OF WYETH AND NOTICE OF INTENT TO
Filed	: 01/21/2005	: ISSUE CERTIFICATE OF CORRECTION
		:

The Request for Recalculation is **GRANTED** to the extent indicated.

The patent term adjustment has been determined to be **1091** days. The USPTO will *sua sponte* issue a certificate of correction reflecting the amount of PTA days determined by the recalculation.

Prior to the issuance of the certificate of correction, the USPTO will afford patentee an opportunity to be heard and request reconsideration. Accordingly, patentee has **one month or thirty (30) days**, whichever is longer, to file a request for reconsideration of this patent term adjustment calculation. See 35 U.S.C. 154(b)(3)(B)(ii) and 37 CFR 1.322(a)(4). No extensions of time will be granted under 37 CFR 1.136.

Patentee should use document code PET.OP if electronically filing a request for reconsideration of this patent term adjustment calculation. The patentee must also include the information required by 37 CFR 1.705(b)(2) and the fee required by 37 CFR 1.18(e). If patentee does not file a timely request for reconsideration of this patent term adjustment calculation including the information required by 37 CFR 1.705(b)(2) and the fee required by 37 CFR 1.18(e), the USPTO will issue a certificate of correction reflecting the PTA determination noted above.

Patentee should be aware that in order to preserve the right to review in the United States District Court for the District of Columbia of the USPTO patent term adjustment determination, patentee must ensure that he or she also take the steps required under 35 U.S.C. 154(b)(4)(A) in a timely manner. Nothing in the request for recalculation should be construed as providing an alternative time frame for commencing a civil action under 35 U.S.C. 154(b)(4)(A).

Any questions concerning this decision should be directed to the Office of Patent Legal Administration at 571-272-7702.

UNITED STATES PATENT AND TRADEMARK OFFICE

Commissioner for Patents
United States Patent and Trademark Office
P.O. Box 1450
Alexandria, VA 22313-1450
www.uspto.gov

Morrison & Foerster, LLP
1650 Tysons Boulevard
Suite 400
McLean, VA 22102

MAILED

AUG 10 2009

OFFICE OF PETITIONS

In re Application of	:	
Thomas Ehrhardt et al.	:	
Application No. 10/522,096	:	DECISION ON PETITION
Filed: January 24, 2005	:	TO WITHDRAW
Attorney Docket No. CUC-1000	:	FROM RECORD
	:	

This is a decision on the Request to Withdraw as attorney or agent of record under 37 C.F.R. § 1.36(b), filed March 14, 2005.

The request is **moot because a revocation of power of attorney has been accepted**.

A review of the file record indicates that the power of attorney to Shawn Hunter and all attorneys/agents associated with customer number 27447 have been revoked by the applicant of the patent application on June 13, 2006. Accordingly, the request to withdraw under 37 C.F.R. § 1.36(b) is moot.

All future communications from the Office will be directed to the below-listed address until otherwise notified by applicant.

Telephone inquires concerning this decision should be directed to Kimberly Inabinet at 571-272- 4618.

Kimberly Inabinet
Petitions Examiner
Office of Petitions

cc: Brinks, Hofer, Gilson & Lione
P.O. Box 1340
Morrisville, NC 27560

05 JUN 2006

#8

UNITED STATES PATENT and TRADEMARK OFFICE

COMMISSIONER FOR PATENTS
UNITED STATES PATENT AND TRADEMARK OFFICE
P.O BOX 1450
ALEXANDRIA, VA 22313-1450
www.uspto.gov

HONIGMAN MILLER SCHWARTZ & COHN LLP
38500 WOODWARD AVENUE
SUITE 100
BLOOMFIELD HILLS MI 48304-5048

In re Application of	:	DECISION ON
YAMABE et al	:	
PCT No.: PCT/JP03/09397	:	
Application No.: 10/522,101	:	
Int. Filing Date: 24 July 2003	:	PAPERS FILED
Priority Date: 24 July 2002	:	
Attorney's Docket No.: 215384-94862	:	
For: PROCESSED SOYBEAN MATERIAL AND	:	
METHOD OF PRODUCING THE SAME	:	UNDER 37 CFR 1.42

This is a decision on the declaration filed 02 February 2006, which has been treated as a request for status under 37 CFR 1.42.

BACKGROUND

On 24 January 2005, applicants filed a transmittal letter for entry into the national stage in the United States which was accompanied by, inter alia, the requisite basic national fee as required by 35 U.S.C. 371(c)(1). No executed declaration was submitted at such time.

On 09 December 2005, the United States Designated/Elected Office (DO/EO/US) mailed a "NOTIFICATION OF MISSING REQUIREMENTS UNDER 35 U.S.C. 371 IN THE UNITED STATES DESIGNATED/ELECTED OFFICE (DO/EO/US)" (Form PCT/DO/EO/905) which informed applicant, inter alia, that an "Oath or Declaration of the inventors, in compliance with 37 CFR 1.497(a) and (b), identifying the application by the International application number and international filing date." It also stated that items set forth above must be submitted within two months from date of mailing or by 32 months from the priority date, whichever is later. Failure to properly respond will result in abandonment."

On 02 February 2006, applicants submitted an executed declaration which is signed by Setsuko Yamabe as the sole heir of the deceased and legal representative of the first inventor Akira YAMABE.

DISCUSSION

The executed declaration submitted is signed by the sole heiress Setsuko YAMABE and legal representative of the deceased inventor (Akira YAMABE) and it satisfies the requirements under 37 CFR 1.42.

Accordingly, the requirements under 37 CFR 1.42 are satisfied and the declaration is acceptable at this time.

CONCLUSION

The submission filed under 37 CFR 1.42 is **ACCEPTED**.

The application is being returned to the United States Designated/Elected Office (DO/EO/US) for processing in accordance with this decision. The 35 U.S.C.§ 371(c)(1), (c)(2), and (c)(4) date of this application as **02 February 2006**.

Rafael Bacares
PCT Legal Examiner
PCT Legal Office
Tel: (571) 272-3276
Fax: (571) 273-0459

02 MAY 2005

#3

UNITED STATES PATENT AND TRADEMARK OFFICE

COMMISSIONER FOR PATENTS
UNITED STATES PATENT AND TRADEMARK OFFICE
P.O. BOX 1450
ALEXANDRIA, VA 22313-1450
www.uspto.gov

JAMES E. BUTLER
AMYLIN PHARMACEUTICALS, INC.
9360 TOWNE CENTRE DRIVE
SAN DIEGO, CA 92121

In re Application of YOUNG et. al Serial No.: 10/522,103 PCT App. No.: PCT/US03/16699 Int'l Filing Date: 28 May 2003 Priority Date: 28 May 2002 Attorney Docket No.: 0201.UTL-0 For: NOVEL EXENDIN AGONIST FORMULATIONS AND METHODS OF OF ADMINISTRATION THEREOF	DECISION ON PETITION UNDER 37 CFR 1.137(b)

The petition to revive under 37 CFR 1.137(b) filed 24 January 2005 in the above-captioned application is hereby **GRANTED** as follows:

Applicant's statement that the "entire delay in filing the required reply from the due date for the required reply until the filing of a grantable petition under 37 CFR 1.137(b) was unintentional" meets the requirement of 37 CFR 1.137(b)(3).

A review of the application file reveals that the basic national fee of $300 has been provided. The required petition fee of $1500 was also paid. Thus, the requirements of 37 CFR 1.137(b) have been satisfied. Therefore, the request to revive the application abandoned under 35 U.S.C. 371(d) is granted as to the National stage in the United States of America.

This application is being forwarded to the United States Designated/Elected Office for further processing. Applicant's deposit account will be charged the $130 surcharge for filing the oath or declaration after the thirty month period. The 35 U.S.C. 371(c)(1), (c)(2) and (c)(4) date is 24 January 2005.

Cynthia M. Kratz

Cynthia M. Kratz
Attorney Advisor
Office of PCT Legal Administration

Telephone: 571-272-3286
Facsimile: 571-273-0459

United States Patent and Trademark Office

Commissioner for Patents
United States Patent and Trademark Office
P.O. Box 1450
Alexandria, VA 22313-1450
www.uspto.gov

#7

Connolly Bove Lodge & Hutz LLP
1007 North Orange Street
P.O. Box 2207
Wilmington, DE 19899

02 OCT 2006

In re Application of	:	
Kogel et al.	:	
Application No.: 10/522,106	:	DECISION
PCT No.: PCT/EP03/07589	:	
Int. Filing Date: 14 July 2003	:	ON
Priority Date: 22 July 2002	:	
Attorney Docket No.: 12810-00067-US	:	PETITION
For: Method For Obtaining Pathogenic	:	
Resistance In Plants	:	

This is in response to the "Request For Withdrawal As Attorney Or Agent And Change Of Correspondence Address" filed on 25 February 2005.

BACKGROUND

This international application was filed on 14 July 2003, claimed an earliest priority date of 22 July 2002, and designated the U.S. The International Bureau communicated a copy of the published international application to the USPTO on 29 January 2004. The 30 month time period for paying the basic national fee in the United States expired at midnight on 24 January 2005 (since 22 January 2005 was a Saturday). Applicants filed, *inter alia*, the basic national fee on 24 January 2005.

DISCUSSION

Counsel requests withdrawal of himself personally and on behalf of "the attorneys/agents associated with Customer Number 25227" for the reason that the "application is being transferred to another attorney."

37 CFR 1.36(b) provides that

> A registered patent attorney or patent agent who has been given a power of attorney pursuant to § 1.32(b) may withdraw as attorney or agent of record upon application to and approval by the Director. The applicant or patent owner will be notified of the withdrawal of the registered patent attorney or patent agent. Where power of attorney is given to the patent practitioners associated with a Customer Number, a request to delete all of the patent practitioners associated with the Customer Number may not be granted if an applicant has given power of attorney to the patent practitioners associated with the Customer Number in an application that has an Office action to which a reply is due, but insufficient time remains for the applicant to file a reply. See § 41.5 of this title for withdrawal during proceedings before the Board of Patent Appeals and Interferences.

While 37 CFR 10.40(b)(4) provides that

With regard to the Request For Withdrawal As Attorney Or Agent filed on 25 February 2005, counsel's attention is drawn respectfully to MPEP 402.06, which states in part that

> In the event that a notice of withdrawal is filed by the attorney or agent of record, the file will be forwarded to the Technology Center Director where the application is assigned where appropriate procedure will be followed pertaining to the withdrawal. The **withdrawal is effective when approved** rather than when received.

Since the approval by the Director of the withdrawal was not given prior to the mailing of the Form PCT/DO/EO/922,that form was properly mailed to the pre-existing correspondence address of record.

With regard to the Transmittal of Power of Attorney, and attached Power of Attorney, Statement Under 37 CFR 3.73(b), Assignment and Recordation Form Cover Sheet filed by present counsel on 03 June 2005, inspection of the included "Assignment of Application" reveals that it does not specifically identify the application which is being assigned. Therefore, the 03 June 2005 submission did not properly establish the right of the assignee to take action in this case, and so the submission was not effective in changing the pre-existing correspondence address of record.

Since the Form PCT/DO/EO/922 was properly mailed to the correct correspondence of record, the petition to withdraw the holding of abandonment is **DISMISSED**, without prejudice.

Petition Under 37 CFR 1.137(b)

A grantable petition to revive an abandoned application under 37 CFR 1.137(b) must be accompanied by (1) the required reply, unless previously filed; (2) the petition fee as set forth in § 1.17(m); (3) a statement that the entire delay in filing the required reply from the due date for the reply until the filing of a grantable petition pursuant to this paragraph was unintentional. The Commissioner may require additional information where there is a question whether the delay was unintentional; and (4) any terminal disclaimer (and fee as set forth in § 1.20 (d)) required pursuant to paragraph (c) of this section.

Regarding requirement (1), the required reply in this case is the reply required by the Form PCT/DO/EO/922 mailed on 01 July 2005 - specifically, a substitute computer readable form (CRF) of the sequence listing and a statement that the content of the CRF is identical to the written (on paper or compact disc) sequence listing and, where applicable, includes no new matter. Since applicants have not filed such a response, requirement (1) has not been met.

Regarding requirement (2), the petition fee is being charged to counsel's Deposit Account No. 03-2775, per the authorization in the petition.

Regarding requirement (3), petitioner states that "the total delay of the application up until the abandonment was unintentional." This is being construed as a statement that "the entire delay in filing the required reply from the due date for the reply until the filing of a grantable petition pursuant to 37 CFR 1.137(b) was unintentional." Petitioner must notify the Patent and Trademark Office if such an interpretation of the statement in the petition is not correct. Thus, the statement in the petition is being accepted in satisfaction of 37 CFR 1.137(b)(3).

Regarding requirement (4), no terminal disclaimer is required because the international filing date of this application is later than 8 June 1995.

DECISION

The petition to withdraw the holding of abandonment is **DISMISSED**, without prejudice.

The petition under 37 CFR 1.137(b) is **DISMISSED**, without prejudice.

Applicants have **TWO (2) MONTHS** from the mailing date of this decision to file a proper response. Extensions of time under 37 CFR 1.136(a) are available.

Please direct any further correspondence with respect to this matter to the Assistant Commissioner for Patents, Mail Stop PCT, P.O. Box 1450, Alexandria, VA 22313-1450, and address the contents of the letter to the attention of the PCT Legal Office.

Boris Milef
PCT Legal Examiner
Office of PCT Legal Administration

George M. Dombroske
PCT Legal Examiner
Office of PCT Legal Administration
Tel: (571) 272-3283
Fax: (571) 273-0459

enc: Copy of Form PCT/DO/EO/922
mailed 01 July 2005

Copy of Raw Sequence
Listing Error Report

#9

United States Patent and Trademark Office

Commissioner for Patents
United States Patent and Trademark Office
P.O. Box 1450
Alexandria, VA 22313-1450
www.uspto.gov

Connolly Bove Lodge & Hutz LLP
1007 North Orange Street
P.O. Box 2207
Wilmington, DE 19899

0 2 APR 2007

In re Application of	:	
Kogel et al.	:	
Application No.: 10/522,106	:	
PCT No.: PCT/EP03/07589	:	
Int. Filing Date: 14 July 2003	:	DECISION
Priority Date: 22 July 2002	:	
Attorney Docket No.: 12810-00067-US	:	
For: Method For Obtaining Pathogenic Resistance In Plants	:	

This is in response to the "Request For Reconsideration" filed on 20 November 2006.

DISCUSSION

In a Decision mailed on 02 October 2006, the petition for withdrawal of the holding of abandonment and the request for withdrawal as attorney or agent filed 25 February 2005 was treated as follows:

> With regard to the Request For Withdrawal As Attorney Or Agent filed on 25 February 2005, counsel's attention is drawn respectfully to MPEP 402.06, which states in part that
>
> > In the event that a notice of withdrawal is filed by the attorney or agent of record, the file will be forwarded to the Technology Center Director where the application is assigned where appropriate procedure will be followed pertaining to the withdrawal. The **withdrawal is effective when approved** rather than when received.
>
> Since the approval by the Director of the withdrawal was not given prior to the mailing of the Form PCT/DO/EO/922,that form was properly mailed to the pre-existing correspondence address of record.
>
> With regard to the Transmittal of Power of Attorney, and attached Power of Attorney, Statement Under 37 CFR 3.73(b), Assignment and Recordation Form Cover Sheet filed by present counsel on 03 June 2005, inspection of the included "Assignment of Application" reveals that it does not specifically identify the application which is being assigned. Therefore, the 03 June 2005 submission did not properly establish the right of the assignee to take action in this case, and so the submission was not effective in changing the pre-existing correspondence address of record.
>
> Since the Form PCT/DO/EO/922 was properly mailed to the correct correspondence of record, the petition to withdraw the holding of abandonment is **DISMISSED**, without prejudice.

In the same Decision, the petition under 37 CFR 1.137(b) was dismissed without prejudice because

> Regarding requirement (1), the required reply in this case is the reply required by the Form PCT/DO/EO/922 mailed on 01 July 2005 - specifically, a substitute computer readable form (CRF) of the sequence listing and a statement that the content of the CRF is identical to the written (on paper or compact disc) sequence listing and, where applicable, includes no new matter. Since applicants have not filed such a response, requirement (1) has not been met.

Petition To Withdraw Holding Of Abandonment

Petitioner, requesting reconsideration of the petition to withdraw the holding of abandonment, argues that "on the initial filing date of the application which included the 'Assignment of Application' with the proper cover sheet, it would have been impossible for the U.S. application number to be indicated," and that "at the time of filing of the U.S. national stage application on January 24, 2005, the 'Assignment of Application' was already executed and could not have specifically identified the application by its U.S. application number." Petitioner further urges that the Assignment was identified by an internal docket number, 0000053764, and that "the submission of the Power of Attorney and change of correspondence address was not to establish the rights of the assignee, since these were already established with the initial filing of the application, but to appoint new attorneys and change the correspondence address."

Petitioner's attention is respectfully drawn to 37 CFR 3.21, which provides that

37 CFR 3.21 Identification of patents and patent applications.

> An assignment relating to a patent must identify the patent by the patent number. An assignment relating to a national patent application must identify the national patent application by the application number (consisting of the series code and the serial number, *e.g.*, 07/123,456). An assignment relating to an international patent application which designates the United States of America must identify the international application by the international application number (*e.g.*, PCT/US90/01234). If an assignment of a patent application filed under § 1.53(b) is executed concurrently with, or subsequent to, the execution of the patent application, but before the patent application is filed, it must identify the patent application by the name of each inventor and the title of the invention so that there can be no mistake as to the patent application intended. If an assignment of a provisional application under § 1.53(c) is executed before the provisional application is filed, it must identify the provisional application by the name of each inventor and the title of the invention so that there can be no mistake as to the provisional application intended.

And to MPEP 302.03, which states that

> The patent or patent application to which an assignment relates must be identified by patent number or application number unless the assignment is executed concurrently with or subsequent to the execution of the application but before the application is filed. Then, the application must be identified by ** the name(s) of the inventors, and the title of the invention. If an assignment of a provisional application is executed before the provisional application is filed, it must identify the provisional application by name(s) of the inventors and the title of the invention.

The Office makes every effort to provide applicants with the application numbers for newly filed patent applications as soon as possible. It is suggested, however, that an assignment be written to allow entry of the identifying number after the execution of the assignment. An example of acceptable wording is:

"I hereby authorize and request my attorney, (Insert name), of (Insert address), to insert here in parentheses (Application number , filed) the filing date and application number of said application when known."

Inspection of the "Assignment of Application" filed on 03 June 2005 reveals that said assignment does "identify the patent application by the name of each inventor," but that it does not identify the application by the title. Rather, the space for the title has been left blank. 37 CFR 3.21 does not provide for this defect to be overcome by the provision of an identifying number (e.g., docket number) in place of the title. In view of 37 CFR 3.21 and MPEP 302.03, it therefore would not be appropriate to accept the "Assignment of Application" filed on 03 June 2005 for purposes of establishing the ownership of the application by BASF Plant Science GmbH in order to take action in the application pursuant to 37 CFR 3.73(b).

Petitioner observes that the "Assignment of Application" was recorded in the USPTO on 24 January 2005 at Reel/Frame No. 016749/0176. However, the reel and frame information was not furnished on the 37 CFR 3.73(b) statement filed on 03 June 2005; rather, the location provided for this information to be recorded on the form was left blank. Since the 37 CFR 3.73(b) statement neither referred to the reel/frame number where the assignment was recorded nor was accompanied by a copy of an assignment properly identifying the application to which it was directed, the submission of 03 June 2005 was not effective in changing the correspondence address of record. Consequently, the Notification To Comply... (Form PCT/DO/EO/922) mailed on 01 July 2005 was properly addressed to previous counsel of record. Accordingly, it would not be appropriate to withdraw the holding of abandonment on the basis of the present record.

Petition Under 37 CFR 1.137(b)

As noted supra, the previous petition under 37 CFR 1.137(b) was not accompanied by the required reply (in the form of a substitute computer readable form (CRF) of the sequence listing and a statement that the content of the CRF is identical to the written (on paper or compact disc) sequence listing and, where applicable, includes no new matter had not been filed. Review of the record reveals that an acceptable CRF was entered into the USPTO database on 12 December 2006, and that the 20 November 2006 submission further included statements that the content of the CRF is identical to the written (on paper or compact disc) sequence listing and includes no new matter. As such, the requirements of 37 CFR 1.137(b) have now been satisfied.

It is noted that the declaration of the inventors filed on 24 January 2005 is defective in that it includes an un-initialed alteration. Specifically, the date of Mr. Kogel's signature has been covered and re-entered, without the alteration being initialed by Mr. Kogel.

CONCLUSION

The petition to withdraw the holding of abandonment is **DISMISSED**, without prejudice.

The petition under 37 CFR 1.137(b) is **GRANTED**.

This application is being forwarded to the National Stage Processing Branch fo further processing, including the preparation and mailing of a Notification of Missing Requirements (Form PCT/DO/EO/905) requiring the submission of an executed oath or declaration compliant with 37 CFR 1.497(a) and (b).

George Dombroske
PCT Legal Examiner
Office of PCT Legal Administration
Tel: (571) 272-3283
Fax: (571) 273-0459

cc: Morrison & Foerster LLP
1650 Tysons Blvd., Suite 300
McLean, VA 22102

United States Patent and Trademark Office

Commissioner for Patents
United States Patent and Trademark Office
P.O. Box 1450
Alexandria, VA 22313-1450
www.uspto.gov

Connolly Bove Lodge & Hutz LLP
1007 North Orange Street
P.O. Box 2207
Wilmington, DE 19899

0 2 APR 2007

In re Application of
Kogel et al.
Application No.: 10/522,106
PCT No.: PCT/EP03/07589
Int. Filing Date: 14 July 2003
Priority Date: 22 July 2002
Attorney Docket No.: 12810-00067-US
For: Method For Obtaining Pathogenic Resistance In Plants

DECISION

This is in response to the "Request For Reconsideration" filed on 20 November 2006.

DISCUSSION

In a Decision mailed on 02 October 2006, the petition for withdrawal of the holding of abandonment and the request for withdrawal as attorney or agent filed 25 February 2005 was treated as follows:

> With regard to the Request For Withdrawal As Attorney Or Agent filed on 25 February 2005, counsel's attention is drawn respectfully to MPEP 402.06, which states in part that
>
> > In the event that a notice of withdrawal is filed by the attorney or agent of record, the file will be forwarded to the Technology Center Director where the application is assigned where appropriate procedure will be followed pertaining to the withdrawal. The **withdrawal is effective when approved** rather than when received.
>
> Since the approval by the Director of the withdrawal was not given prior to the mailing of the Form PCT/DO/EO/922,that form was properly mailed to the pre-existing correspondence address of record.
>
> With regard to the Transmittal of Power of Attorney, and attached Power of Attorney, Statement Under 37 CFR 3.73(b), Assignment and Recordation Form Cover Sheet filed by present counsel on 03 June 2005, inspection of the included "Assignment of Application" reveals that it does not specifically identify the application which is being assigned. Therefore, the 03 June 2005 submission did not properly establish the right of the assignee to take action in this case, and so the submission was not effective in changing the pre-existing correspondence address of record.
>
> Since the Form PCT/DO/EO/922 was properly mailed to the correct correspondence of record, the petition to withdraw the holding of abandonment is **DISMISSED**, without prejudice.

In the same Decision, the petition under 37 CFR 1.137(b) was dismissed without prejudice because

> Regarding requirement (1), the required reply in this case is the reply required by the Form PCT/DO/EO/922 mailed on 01 July 2005 - specifically, a substitute computer readable form (CRF) of the sequence listing and a statement that the content of the CRF is identical to the written (on paper or compact disc) sequence listing and, where applicable, includes no new matter. Since applicants have not filed such a response, requirement (1) has not been met.

Petition To Withdraw Holding Of Abandonment

Petitioner, requesting reconsideration of the petition to withdraw the holding of abandonment, argues that "on the initial filing date of the application which included the 'Assignment of Application' with the proper cover sheet, it would have been impossible for the U.S. application number to be indicated," and that "at the time of filing of the U.S. national stage application on January 24, 2005, the 'Assignment of Application' was already executed and could not have specifically identified the application by its U.S. application number." Petitioner further urges that the Assignment was identified by an internal docket number, 0000053764, and that "the submission of the Power of Attorney and change of correspondence address was not to establish the rights of the assignee, since these were already established with the initial filing of the application, but to appoint new attorneys and change the correspondence address."

Petitioner's attention is respectfully drawn to 37 CFR 3.21, which provides that

37 CFR 3.21 Identification of patents and patent applications.

> An assignment relating to a patent must identify the patent by the patent number. An assignment relating to a national patent application must identify the national patent application by the application number (consisting of the series code and the serial number, *e.g.*, 07/123,456). An assignment relating to an international patent application which designates the United States of America must identify the international application by the international application number (*e.g.*, PCT/US90/01234). If an assignment of a patent application filed under § 1.53(b) is executed concurrently with, or subsequent to, the execution of the patent application, but before the patent application is filed, it must identify the patent application by the name of each inventor and the title of the invention so that there can be no mistake as to the patent application intended. If an assignment of a provisional application under § 1.53(c) is executed before the provisional application is filed, it must identify the provisional application by the name of each inventor and the title of the invention so that there can be no mistake as to the provisional application intended.

And to MPEP 302.03, which states that

> The patent or patent application to which an assignment relates must be identified by patent number or application number unless the assignment is executed concurrently with or subsequent to the execution of the application but before the application is filed. Then, the application must be identified by ** the name(s) of the inventors, and the title of the invention. If an assignment of a provisional application is executed before the provisional application is filed, it must identify the provisional application by name(s) of the inventors and the title of the invention.

> The Office makes every effort to provide applicants with the application numbers for newly filed patent applications as soon as possible. It is suggested, however, that an assignment be written to allow entry of the identifying number after the execution of the assignment. An example of acceptable wording is:
>
> "I hereby authorize and request my attorney, (Insert name), of (Insert address), to insert here in parentheses (Application number , filed) the filing date and application number of said application when known."

Inspection of the "Assignment of Application" filed on 03 June 2005 reveals that said assignment does "identify the patent application by the name of each inventor," but that it does not identify the application by the title. Rather, the space for the title has been left blank. 37 CFR 3.21 does not provide for this defect to be overcome by the provision of an identifying number (e.g., docket number) in place of the title. In view of 37 CFR 3.21 and MPEP 302.03, it therefore would not be appropriate to accept the "Assignment of Application" filed on 03 June 2005 for purposes of establishing the ownership of the application by BASF Plant Science GmbH in order to take action in the application pursuant to 37 CFR 3.73(b).

Petitioner observes that the "Assignment of Application" was recorded in the USPTO on 24 January 2005 at Reel/Frame No. 016749/0176. However, the reel and frame information was not furnished on the 37 CFR 3.73(b) statement filed on 03 June 2005; rather, the location provided for this information to be recorded on the form was left blank. Since the 37 CFR 3.73(b) statement neither referred to the reel/frame number where the assignment was recorded nor was accompanied by a copy of an assignment properly identifying the application to which it was directed, the submission of 03 June 2005 was not effective in changing the correspondence address of record. Consequently, the Notification To Comply... (Form PCT/DO/EO/922) mailed on 01 July 2005 was properly addressed to previous counsel of record. Accordingly, it would not be appropriate to withdraw the holding of abandonment on the basis of the present record.

Petition Under 37 CFR 1.137(b)

As noted supra, the previous petition under 37 CFR 1.137(b) was not accompanied by the required reply (in the form of a substitute computer readable form (CRF) of the sequence listing and a statement that the content of the CRF is identical to the written (on paper or compact disc) sequence listing and, where applicable, includes no new matter had not been filed. Review of the record reveals that an acceptable CRF was entered into the USPTO database on 12 December 2006, and that the 20 November 2006 submission further included statements that the content of the CRF is identical to the written (on paper or compact disc) sequence listing and includes no new matter. As such, the requirements of 37 CFR 1.137(b) have now been satisfied.

It is noted that the declaration of the inventors filed on 24 January 2005 is defective in that it includes an un-initialed alteration. Specifically, the date of Mr. Kogel's signature has been covered and re-entered, without the alteration being initialed by Mr. Kogel.

CONCLUSION

The petition to withdraw the holding of abandonment is **DISMISSED**, without prejudice.

The petition under 37 CFR 1.137(b) is **GRANTED**.

This application is being forwarded to the National Stage Processing Branch fo further processing, including the preparation and mailing of a Notification of Missing Requirements (Form PCT/DO/EO/905) requiring the submission of an executed oath or declaration compliant with 37 CFR 1.497(a) and (b).

George Dombroske
PCT Legal Examiner
Office of PCT Legal Administration
Tel: (571) 272-3283
Fax: (571) 273-0459

cc: Morrison & Foerster LLP
1650 Tysons Blvd., Suite 300
McLean, VA 22102

United States Patent an·. ..ademark Office

Commissioner for Patents
United States Patent and Trademark Office
P.O. Box 1450
Alexandria, VA 22313-1450
www.uspto.gov

Connolly Bove Lodge & Hutz LLP
1007 North Orange Street
P.O. Box 2207
Wilmington, DE 19899

0 2 APR 2007

In re Application of	:	
Kogel et al.	:	
Application No.: 10/522,106	:	
PCT No.: PCT/EP03/07589	:	
Int. Filing Date: 14 July 2003	:	DECISION
Priority Date: 22 July 2002	:	
Attorney Docket No.: 12810-00067-US	:	
For: Method For Obtaining Pathogenic Resistance In Plants	:	

This is in response to the "Request For Reconsideration" filed on 20 November 2006.

DISCUSSION

In a Decision mailed on 02 October 2006, the petition for withdrawal of the holding of abandonment and the request for withdrawal as attorney or agent filed 25 February 2005 was treated as follows:

> With regard to the Request For Withdrawal As Attorney Or Agent filed on 25 February 2005, counsel's attention is drawn respectfully to MPEP 402.06, which states in part that
>
> > In the event that a notice of withdrawal is filed by the attorney or agent of record, the file will be forwarded to the Technology Center Director where the application is assigned where appropriate procedure will be followed pertaining to the withdrawal. The **withdrawal is effective when approved** rather than when received.
>
> Since the approval by the Director of the withdrawal was not given prior to the mailing of the Form PCT/DO/EO/922,that form was properly mailed to the pre-existing correspondence address of record.
>
> With regard to the Transmittal of Power of Attorney, and attached Power of Attorney, Statement Under 37 CFR 3.73(b), Assignment and Recordation Form Cover Sheet filed by present counsel on 03 June 2005, inspection of the included "Assignment of Application" reveals that it does not specifically identify the application which is being assigned. Therefore, the 03 June 2005 submission did not properly establish the right of the assignee to take action in this case, and so the submission was not effective in changing the pre-existing correspondence address of record.
>
> Since the Form PCT/DO/EO/922 was properly mailed to the correct correspondence of record, the petition to withdraw the holding of abandonment is **DISMISSED**, without prejudice.

In the same Decision, the petition under 37 CFR 1.137(b) was dismissed without prejudice because

> Regarding requirement (1), the required reply in this case is the reply required by the Form PCT/DO/EO/922 mailed on 01 July 2005 - specifically, a substitute computer readable form (CRF) of the sequence listing and a statement that the content of the CRF is identical to the written (on paper or compact disc) sequence listing and, where applicable, includes no new matter. Since applicants have not filed such a response, requirement (1) has not been met.

Petition To Withdraw Holding Of Abandonment

Petitioner, requesting reconsideration of the petition to withdraw the holding of abandonment, argues that "on the initial filing date of the application which included the 'Assignment of Application' with the proper cover sheet, it would have been impossible for the U.S. application number to be indicated," and that "at the time of filing of the U.S. national stage application on January 24, 2005, the 'Assignment of Application' was already executed and could not have specifically identified the application by its U.S. application number." Petitioner further urges that the Assignment was identified by an internal docket number, 0000053764, and that "the submission of the Power of Attorney and change of correspondence address was not to establish the rights of the assignee, since these were already established with the initial filing of the application, but to appoint new attorneys and change the correspondence address."

Petitioner's attention is respectfully drawn to 37 CFR 3.21, which provides that

37 CFR 3.21 Identification of patents and patent applications.

> An assignment relating to a patent must identify the patent by the patent number. An assignment relating to a national patent application must identify the national patent application by the application number (consisting of the series code and the serial number, *e.g.*, 07/123,456). An assignment relating to an international patent application which designates the United States of America must identify the international application by the international application number (*e.g.*, PCT/US90/01234). If an assignment of a patent application filed under § 1.53(b) is executed concurrently with, or subsequent to, the execution of the patent application, but before the patent application is filed, it must identify the patent application by the name of each inventor and the title of the invention so that there can be no mistake as to the patent application intended. If an assignment of a provisional application under § 1.53(c) is executed before the provisional application is filed, it must identify the provisional application by the name of each inventor and the title of the invention so that there can be no mistake as to the provisional application intended.

And to MPEP 302.03, which states that

> The patent or patent application to which an assignment relates must be identified by patent number or application number unless the assignment is executed concurrently with or subsequent to the execution of the application but before the application is filed. Then, the application must be identified by ** the name(s) of the inventors, and the title of the invention. If an assignment of a provisional application is executed before the provisional application is filed, it must identify the provisional application by name(s) of the inventors and the title of the invention.

CONCLUSION

The petition to withdraw the holding of abandonment is **DISMISSED**, without prejudice.

The petition under 37 CFR 1.137(b) is **GRANTED**.

This application is being forwarded to the National Stage Processing Branch fo further processing, including the preparation and mailing of a Notification of Missing Requirements (Form PCT/DO/EO/905) requiring the submission of an executed oath or declaration compliant with 37 CFR 1.497(a) and (b).

George Dombroske
PCT Legal Examiner
Office of PCT Legal Administration
Tel: (571) 272-3283
Fax: (571) 273-0459

cc: Morrison & Foerster LLP
1650 Tysons Blvd., Suite 300
McLean, VA 22102

UNITED STATES PATENT AND TRADEMARK OFFICE

Commissioner for Patents
United States Patent and Trademark Office
P.O. Box 1450
Alexandria, VA 22313-1450
www.uspto.gov

Victor H. Segura
Schlumberger Technology Corporation
Sugar Land Product Center
200 Gillingham Lane MD 200-9
Sugar Land, TX 77478

COPY MAILED

MAY 22 2008

OFFICE OF PETITIONS

In re Application of	:	
Philip Head et al.	:	
Application No. 10/522,116	:	DECISION ON PETITION
Filed: January 24, 2005	:	
Attorney Docket No. US21.1268	:	

This is a decision on the petition under the unintentional provisions of 37 CFR 1.137(b), filed February 25, 2008, to revive the above-identified application.

The petition is **GRANTED**.

The application became abandoned for failure to reply in a timely manner to the non-final Office action mailed June 25, 2007, which set a shortened statutory period for reply of three (3) months. No extensions of time under the provisions of 37 CFR 1.136(a) were obtained. Accordingly, the application became abandoned on September 26, 2007. A Notice of Abandonment was mailed on January 28, 2008.

The petition satisfies the requirements of 37 CFR 1.137(b) in that petitioner has supplied (1) the reply in the form of an amendment after non-final, (2) the petition fee of $1540, and (3) a proper statement of unintentional delay.

There is no indication that the person signing the petition was ever given a power of attorney or authorization of agent to prosecute the application. However, in accordance with 37 CFR 1.34(a), the signature appearing on the petition shall constitute a representation to the United States Patent and Trademark Office that he/she is authorized to represent the particular party in whose behalf he/she acts.

Telephone inquiries concerning this decision should be directed to Kimberly Inabinet at (571) 272-4618.

This application is being referred to Technology Center AU 3672 for appropriate action by the Examiner in the normal course of business on the reply received February 25, 2008.

Andrea Smith
Petitions Examiner
Office of Petitions

UNITED STATES PATENT AND TRADEMARK OFFICE

Commissioner for Patents
United States Patent and Trademark Office
P.O. Box 1450
Alexandria, VA 22313-1450
www.uspto.gov

27 OCT 2006

Salvatore J. Abbruzzese
Hoffman & Baron, LLP
6900 Jericho Turnpike
Syosset, NY 11791-4407

In re Application of	:	
KROESE, et al.	:	
U.S. Application No.: 10/522,117	:	DECISION ON PETITION
PCT No.: PCT/NL03/00528	:	
Int. Filing Date: 17 July 2003	:	37 CFR 1.181
Priority Date: 26 July 2002	:	
Attorney Docket No.:903-129 PCT/US	:	
For: SWITCHING UNIT FOR SWITCHING A CONNECTION BETWEEN A MAINS AND A LOAD	:	

This decision is in response to applicant's "PETITION TO REVIVE PURSUANT TO 37 C.F.R. §1.137(b)" filed 18 August 2006 in the United States Patent and Trademark Office (USPTO). For the reasons discussed herein the petition is being treated as a petition under 37 CFR 1.181 to withdraw the holding of abandonment. No petition fee is required.

BACKGROUND

On 17 July 2003, applicant filed international application PCT/NL03/00528 which claimed priority of an earlier application filed 26 July 2002. A copy of the international application was communicated to the United States Patent and Trademark Office from the International Bureau on 05 February 2004. Pursuant to 37 CFR 1.495, the deadline for payment of the basic national fee in the United States was to expire 30 months from the priority date, 26 January 2005.

On 24 January 2005, applicant filed a transmittal letter for entry into the national stage in the United States, which was accompanied by the requisite basic national fee as required by 35 U.S.C. 371(c)(1); an English translation of the international application and a first preliminary amendment.

On 06 September 2005, applicant was mailed a "Notification of Missing Requirements" (Form PCT/DO/EO/905) informing applicant that an executed oath or declaration of the inventors in compliance with 37 CFR 1.497(a)-(b) was required. Applicant was afforded two months to file the required response and advised that this period could be extended pursuant to 37 CFR 1.136(a).

On 11 July 2006, applicant was mailed a NOTIFICATION OF ABANDONMENT (Form

PCT/DO/EO/909) informing applicant that applicant had failed to respond to the Form PCT/DO/EO/905 mailed 06 September 2005 within the time period set therein and that above-identified application was abandoned as to the United States.

On 18 August 2006, applicant filed the petition considered herein.

DISCUSSION

As discussed below, when applicant claims that abandonment of the application was improper because applicant never received an Office action, a petition under 37 CFR 1.137(a) or (b) is not required. Instead, a petition under 37 CFR 1.181 is proper.

The Manual of Patent Examining Procedure (MPEP) at 711.03(c) and the Official Gazette, at 1156 OG 53, provides that a petition requesting relief based on the grounds that an Office action was not received must be accompanied by a statement that (1) the Office action was not received, (2) attests that a search of the file jacket indicates the Office action was not received, (3) attests that a search of counsel's docket records indicates the Office action was not received and (4) the Petition must also be accompanied by copies of the docket records where the non-received Office action would have been entered. (See also, Delgar v. Schulyer, 172 USPQ 513 (D.D.C. 1971). Applicant has satisfied items (1) above.

As to item (2), applicant has not provided a statement that a search of the file jacket indicates that the Form PCT/DO/EO/905 mailed 06 September 2005 was not received.

Regarding items (3) and (4), applicant has not provided a statement that a review of counsel's docket records indicates the Office action was not received nor has applicant included copies of the docket record for the firm covering the time period in which the subject Office action would have been recorded.

CONCLUSION

For the reasons detailed above, applicant's petition under 37 CFR 1.181 is **DISMISSED**.

This application remains **ABANDONED**.

Any reconsideration on the merits of this petition must be filed within **TWO (2) MONTHS** from the mail date of this decision. Any reconsideration request should include a cover letter entitled "Renewed Petition Under 37 CFR 1.181." Extensions of time may be obtained under 37 CFR 1.136(a).

Any further correspondence with respect to this matter should be directed to Mail Stop PCT, Commissioner for Patents, Office of PCT Legal Administration, P.O. Box 1450, Alexandria, Virginia 22313-1450, with the contents of the letter marked to the attention of the Office of PCT Legal Administration.

Derek A. Putonen
Attorney Advisor
Office of PCT Legal Administration
Tel: (571) 272-3294
Fax: (571) 273-0459

UNITED STATES PATENT AND TRADEMARK OFFICE

Commissioner for Patents
United States Patent and Trademark Office
P.O. Box 1450
Alexandria, VA 22313-1450
www.uspto.gov

03 JAN 2007

Salvatore J. Abbruzzese
Hoffman & Baron, LLP
6900 Jericho Turnpike
Syosset, NY 11791-4407

In re Application of	:	
KROESE, et al.	:	
U.S. Application No.: 10/522,117	:	DECISION ON RENEWED
PCT No.: PCT/NL03/00528	:	
Int. Filing Date: 17 July 2003	:	PETITION UNDER
Priority Date: 26 July 2002	:	
Attorney Docket No.:903-129 PCT/US	:	37 CFR 1.181
For: SWITCHING UNIT FOR SWITCHING A CONNECTION BETWEEN A MAINS AND A LOAD	:	

This decision is in response to applicant's request for reconsideration filed 04 December 2006 in the United States Patent and Trademark Office (USPTO). The petition is being treated as a renewed petition under 37 CFR 1.181 to withdraw the holding of abandonment. No petition fee is required.

BACKGROUND

On 27 October 2006, applicant was mailed a decision dismissing applicant's petition to withdraw the holding of abandonment. Applicant was afforded two months to file any request for reconsideration.

On 04 December 2006, applicant filed the renewed petition considered herein.

DISCUSSION

As discussed in the decision mailed 27 October 2006, the Manual of Patent Examining Procedure (MPEP) at 711.03(c) and the Official Gazette, at 1156 OG 53, provides that a petition requesting relief based on the grounds that an Office action was not received must be accompanied by a statement that (1) the Office action was not received, (2) attests that a search of the file jacket indicates the Office action was not received, (3) attests that a search of counsel's docket records indicates the Office action was not received and (4) the Petition must also be accompanied by copies of the docket records where the non-received Office action would have been entered. (See also, Delgar v. Schulyer, 172 USPQ 513 (D.D.C. 1971). Applicant previously satisfied item (1) above.

With the filing of the present renewed petition and supporting documentation, applicant

has satisfied the remaining items and it is proper to grant applicant's renewed petition at this time.

CONCLUSION

For the reasons discussed above, applicant's renewed petition under 37 CFR 1.181 to withdraw the holding of abandonment is **GRANTED**.

The "Notification of Abandonment" (Form PCT/DO/EO/909) mailed 11 July 2006 is hereby **VACATED**.

This application is being forwarded to the United States Designated/Elected Office (US/DO/EO) for continued processing including the issuance of a new Notification of Missing Requirements (Form PCT/DO/EO/905) indicating that a compliant, executed oath or declaration of the inventors is required.

Derek A. Putonen
Attorney Advisor
Office of PCT Legal Administration
Tel: (571) 272-3294
Fax: (571) 273-0459

24 MAR 2005

#3

UNITED STATES PATENT AND TRADEMARK OFFICE

COMMISSIONER FOR PATENTS
UNITED STATES PATENT AND TRADEMARK OFFICE
P.O. BOX 1450
ALEXANDRIA, VA 22313-1450
www.uspto.gov

IPLM GROUP, P.A.
POST OFFICE BOX 18455
MINNEAPOLIS, MN 55418

In re Application of WIND, Donald G. et al. Application No.: 10/522,120 PCT No.: PCT/US03/13913 Int. Filing Date: 02 May 2003 Priority Date: 03 May 2002 Docket No.: 160-P-1588USWO01 For: COMPLIANT OVERPRINT VARNISHES	DECISION ON PETITION UNDER 37 CFR 1.137(b)

Applicant's "Petition to Revive Unintentionally Abandoned Application Under 37 C.F.R. §1.137(b)," filed in the above-captioned application on 24 January 2005 is **GRANTED**.

Applicant states that the entire delay in filing the required reply from the due date for the required reply until the filing of a grantable petition under 37 CFR 1.137(b) was unintentional, in satisfaction of 37 CFR 1.137(b)(3). The petition fee and basic national fee have been submitted. A terminal disclaimer is not required as the application was filed on or after 08 June 1995. Accordingly, all requirements under 37 CFR 1.137(b) have been satisfied.

A signed oath or declaration has not yet been submitted.

This application is being forwarded to the National Stage Processing Branch of the Office of PCT Operations for continued processing in accordance with this decision, including the mailing of a Notification of Missing Requirements (Form PCT/DO/EO/905) indicating that an oath or declaration in compliance with 37 CFR 1.497(a)-(b) is required.

Erin M. Pender

Erin M. Pender
Attorney Advisor
PCT Legal Administration

Telephone: 571-272-3292
Facsimile: 571-273-0459

UNITED STATES PATENT AND TRADEMARK OFFICE

Commissioner for Patents
United States Patent and Trademark Office
P.O. Box 1450
Alexandria, VA 22313-1450
www.uspto.gov

0 9 JAN 2008

FOLEY & LARDNER LLP
P.O. BOX 80278
SAN DIEGO, CA 92138-0278

In re Application of	:	
GOODMAN, Murray et al.	:	
Application No.: 10/522,130	:	DECISION ON
PCT No.: PCT/US03/22772	:	
Int. Filing Date: 18 July 2003	:	PETITION
Priority Date: 19 July 2002	:	
Attorney Docket No.: SDUC1100-1	:	UNDER 37 CFR 1.47(a)
For: DENDRIMERS AS MOLECULAR	:	
TRANSLOCATORS	:	

This is a decision on applicants' Petition Under 37 C.F.R. §§1.47(a) and 1.42, filed in the United States Patent and Trademark Office (USPTO) on 07 November 2007.

BACKGROUND

On 20 June 2007, the Office mailed Decision On Petition Under 37 CFR 1.47(a), dismissing applicants' petition without prejudice, but granting applicant's request for status under 37 CFR 1.42.

On 07 November 2007, applicants submitted this renewed petition under 37 CFR 1.47(a), which was accompanied by, *inter alia*, the fee for a three month extension of time.

DISCUSSION

A petition under 37 CFR 1.47 must be accompanied by: (1) the fee under 37 CFR 1.17(h), (2) proof of pertinent facts, namely that the inventor refuses to sign after being presented with the application papers or cannot be reached after diligent effort, (3) a statement of the last known address of the inventor, and (4) an oath or declaration by the 37 CFR 1.47(a) applicant on behalf of himself or herself and the non-signing applicant.

Items (1) and (3) were previously satisfied. The petition fee has been paid. Applicants list the last known addresses for the non-signing inventor as:

Changhee Min, Kum-na-mu Apartment, 201-803 Doonsan-dong, Suh-ku Daejons, Korea

Item (2) has now been satisfied. Applicants have sent a complete copy of the application papers to applicant's last known address and have followed it with a complete copy of the application papers sent to applicant's last known email address. A signed declaration has not been received from the inventor.

Item (4) has now been satisfied. The declarations of the inventors are now in compliance with 37 CFR 1.497(a)-(b). While the declaration executed by the legal representative of Murray Goodman would not comply with 37 CFR 1.497(a)-(b) and 37 CFR 1.42, applicants previously complied with this requirement on 02 February 2007.

CONCLUSION

For the above reasons, applicants' petition under 37 CFR 1.47(a) is **GRANTED**.

As provided in 37 CFR 1.47(a), a notice of the filing of this application will be forwarded to the nonsigning inventor at his last known address of record.

A notice of the filing of the application under 37 CFR 1.47(a) will be published in the Official Gazette.

This application is being forwarded to the National Stage Processing Branch of the Office of Patent Application Processing for continued national stage processing of the application, including accordation of a 35 U.S.C. §371(c)(1), (c)(2) and (c)(4) date of **07 November 2007**.

Erin P. Thomson

Erin P. Thomson
Attorney Advisor
PCT Legal Administration

Telephone: 571-272-3292
Facsimile: 571-273-0459

02 AUG 2006

UNITED STATES PATENT AND TRADEMARK OFFICE

Commissioner for Patents
United States Patent and Trademark Office
P.O. Box 1450
Alexandria, VA 22313-1450
www.uspto.gov

FOLEY & LARDNER LLP
P.O. BOX 80278
SAN DIEGO, CA 92138-0278

In re Application of	:	
GOODMAN, Murray	:	
Application No.: 10/522,130	:	DECISION ON
PCT No.: PCT/US03/22772	:	
Int. Filing Date: 18 July 2003	:	PETITION
Priority Date: 19 July 2002	:	
Attorney Docket No.: SDUC1100-1	:	UNDER 37 CFR 1.47(a)
For: DENDRIMERS AS MOLECULAR	:	
TRANSLOCATORS	:	

This is a decision on applicants' "Petition Under 37 C.F.R. §1.47(a)," filed in the United States Patent and Trademark Office (USPTO) on 17 January 2006.

BACKGROUND

On 18 July 2003, applicants filed international application PCT/US03/22772, which claimed a priority date of 19 July 2002. The thirty-month period for paying the basic national fee in the United States expired at midnight on 19 January 2005.

On 19 January 2005, applicants filed a submission for entry into the national stage in the United States which was accompanied by, *inter alia*, the U.S. Basic National Fee.

On 17 August 2005, the Office mailed Notification of Missing Requirements (Form PCT/DO/EO/905) indicating that a declaration in compliance with 37 CFR 1.497(a)-(b) was required.

On 17 January 2006, applicants submitted a petition under 37 CFR 1.47(a), which was accompanied by, *inter alia*, the fee for a three month extension of time.

DISCUSSION

A petition under 37 CFR 1.47 must be accompanied by: (1) the fee under 37 CFR 1.17(h), (2) proof of pertinent facts, namely that the inventor refuses to sign after being presented with the application papers or cannot be reached after diligent effort, (3) a statement of the last known address of the inventor, and (4) an oath or declaration by the 37 CFR 1.47(a) applicant on behalf of himself or herself and the non-signing applicant.

Items (1) and (3) have been satisfied. The balance of the $200 petition fee will be charged to deposit account no. 50-0872, as authorized. Applicants list the last known addresses for the three non-signing inventors as:

Changhee Min, Kum-na-mu Apartment, 201-803 Doonsan-dong, Suh-ku Daejons, Korea
Byung Hyune Choi 963-4 Bangbae-dong, Seocho-ku, Korea 137-846 and
Hyun-Ho Chung, 10590 Gaylemont Ln, San Diego, CA 92130.

Item (2) has not been satisfied. Applicants have not furnished evidence of receipt of the complete copy of the application papers, including the declaration, by the non-signing inventors. The petition does not indicate first hand knowledge of the presentation, nor does it detail the presentation of the papers to the inventors. A statement from someone with firsthand knowledge of the presentation of a complete copy of the application papers, not just the declaration, to the inventors is required. Failure to execute a declaration in the absence of presentation with a complete copy of the application papers is not ordinarily sufficient to establish refusal to join. MPEP 409.03(d). Copies of returned mail receipts or other evidence supporting a contention that applicants were presented with a complete copy of the application papers and copies of the mailings to the inventors should be provided.

Item (4) has not been satisfied. The international application lists six inventors. The declaration executed by Murray Goodman lists three inventors. The declarations executed by Churl Min Seong and Guido Harms appear to list seven inventors as they list Changhee Min twice. The declarations fail to comply with 37 CFR 1.497 (a) as they fail to list the inventors on the international application, including corrections under PCT Rule 92*bis*, and any corrections made under 37 CFR 1.182 and 1.497(d). New declarations are required. Applicants should also furnish an explanation from Murray Goodman as to why he signed a declaration listing only three inventors.

CONCLUSION

For the above reasons, applicants' petition under 37 CFR 1.47(a) is **DISMISSED** without prejudice.

If reconsideration on the merits of this petition is desired, a proper response must be filed within TWO (2) MONTHS from the mail date of this decision. Failure to timely file the proper response will result in abandonment of this application. Any reconsideration request should include a cover letter entitled "Renewed Petition Under 37 CFR 1.47(a)." No additional petition fee is required.

Any further correspondence with respect to this matter should be addressed to the Mail Stop PCT, Commissioner for Patents, Office of PCT Legal Administration, P.O. Box 1450, Alexandria, Virginia 22313-1450, with the contents of the letter marked to the attention of the Office of PCT Legal Administration.

Erin P. Thomson

Erin P. Thomson
Attorney Advisor
PCT Legal Administration

Telephone: 571-272-3292
Facsimile: 571-273-0459

2 0 JUN 2007

#7

UNITED STATES PATENT AND TRADEMARK OFFICE

Commissioner for Patents
United States Patent and Trademark Office
P.O. Box 1450
Alexandria, VA 22313-1450
www.uspto.gov

FOLEY & LARDNER LLP
P.O. BOX 80278
SAN DIEGO, CA 92138-0278

In re Application of	:	
GOODMAN, Murray	:	
Application No.: 10/522,130	:	DECISION ON
PCT No.: PCT/US03/22772	:	
Int. Filing Date: 18 July 2003	:	PETITION
Priority Date: 19 July 2002	:	
Attorney Docket No.: SDUC1100-1	:	UNDER 37 CFR 1.47(a)
For: DENDRIMERS AS MOLECULAR	:	
TRANSLOCATORS	:	

This is a decision on applicants' Petition Under 37 C.F.R. §§1.47(a) and 1.42, filed in the United States Patent and Trademark Office (USPTO) on 02 February 2007.

BACKGROUND

On 02 August 2006, the Office mailed Decision On Petition Under 37 CFR 1.47(a), dismissing applicants' petition without prejudice.

On 02 February 2007, applicants submitted this renewed petition under 37 CFR 1.47(a) and a request for status under 37 CFR 1.42, which was accompanied by, *inter alia*, the fee for a four month extension of time.

DISCUSSION

A petition under 37 CFR 1.47 must be accompanied by: (1) the fee under 37 CFR 1.17(h), (2) proof of pertinent facts, namely that the inventor refuses to sign after being presented with the application papers or cannot be reached after diligent effort, (3) a statement of the last known address of the inventor, and (4) an oath or declaration by the 37 CFR 1.47(a) applicant on behalf of himself or herself and the non-signing applicant.

Items (1) and (3) were previously satisfied. The petition fee has been paid. Applicants list the last known addresses for the three non-signing inventors as:

Changhee Min, Kum-na-mu Apartment, 201-803 Doonsan-dong, Suh-ku Daejons, Korea
Byung Hyune Choi 963-4 Bangbae-dong, Seocho-ku, Korea 137-846 and
Hyun-Ho Chung, 10590 Gaylemont Ln, San Diego, CA 92130.

Item (2) has not been satisfied. Applicants have not furnished evidence of receipt of the complete copy of the application papers, including the declaration, by the non-signing inventors. The petition does not indicate first hand knowledge of the presentation, nor does it detail the presentation of the papers to the inventors. From the statement of Kristine Cole, it appears that Ms. Cole only made contact with inventor Chung and did not attempt to present him with a complete copy of the application papers. The package sent to the corporate parent of the now-closed former employer of three non-signing

inventors is not sufficient to constitute presentation with a complete copy of the application papers in the absence of evidence of actual receipt by the inventors. Communication should be made with the inventors at their last known home address. Applicants should attempt to verify that the last known address of each non-signing inventor is a current address.

Item (4) has not been satisfied. The international application lists six inventors. Applicants have supplied a declaration listing two Changhee Mins. As there is only one and applicants acknowledge the listing of a second Changhee Min was in error, a new declaration is required to correct the error. Applicants argue that the declaration is acceptable as it lists the 6 inventors. However, it erroneously lists a seventh inventor. Applicants claim it is a duplicate, however, it is a seventh listed inventor. The The declaration fails to comply with 37 CFR 1.497 (a) as it does not list the correct inventive entity as stated in the international application, including corrections under PCT Rule 92*bis*, and any corrections made under 37 CFR 1.182 and 1.497(d). A new declaration is required.

Applicants previously supplied a declaration signed by Murray Goodman listing only three inventors. Applicants have now provided a declaration by Zelda Goodman as legal representative on behalf of her deceased husband Murray Goodman. The declaration lists the inventors and their citizenships and the legal representative and her citizenship residence and mailing address. The declaration of Murray Goodman complies with 37 CFR 1.42 and 37 CFR 1.497(a)-(b).

CONCLUSION

For the above reasons, applicants' petition under 37 CFR 1.47(a) is **DISMISSED** without prejudice.

If reconsideration on the merits of this petition is desired, a proper response must be filed within TWO (2) MONTHS from the mail date of this decision. Failure to timely file the proper response will result in abandonment of this application. Any reconsideration request should include a cover letter entitled "Renewed Petition Under 37 CFR 1.47(a)." No additional petition fee is required.

Any further correspondence with respect to this matter should be addressed to the Mail Stop PCT, Commissioner for Patents, Office of PCT Legal Administration, P.O. Box 1450, Alexandria, Virginia 22313-1450, with the contents of the letter marked to the attention of the Office of PCT Legal Administration.

Erin P. Thomson

Erin P. Thomson
Attorney Advisor
PCT Legal Administration

Telephone: 571-272-3292
Facsimile: 571-273-0459

9

UNITED STATES PATENT AND TRADEMARK OFFICE

Commissioner for Patents
United States Patent and Trademark Office
P.O. Box 1450
Alexandria, VA 22313-1450
www.uspto.gov

0 9 JAN 2008

FOLEY & LARDNER LLP
P.O. BOX 80278
SAN DIEGO, CA 92138-0278

In re Application of	:	
GOODMAN, Murray et al.	:	
Application No.: 10/522,130	:	DECISION ON
PCT No.: PCT/US03/22772	:	
Int. Filing Date: 18 July 2003	:	PETITION
Priority Date: 19 July 2002	:	
Attorney Docket No.: SDUC1100-1	:	UNDER 37 CFR 1.47(a)
For: DENDRIMERS AS MOLECULAR	:	
TRANSLOCATORS	:	

This is a decision on applicants' Petition Under 37 C.F.R. §§1.47(a) and 1.42, filed in the United States Patent and Trademark Office (USPTO) on 07 November 2007.

BACKGROUND

On 20 June 2007, the Office mailed Decision On Petition Under 37 CFR 1.47(a), dismissing applicants' petition without prejudice, but granting applicant's request for status under 37 CFR 1.42.

On 07 November 2007, applicants submitted this renewed petition under 37 CFR 1.47(a), which was accompanied by, *inter alia*, the fee for a three month extension of time.

DISCUSSION

A petition under 37 CFR 1.47 must be accompanied by: (1) the fee under 37 CFR 1.17(h), (2) proof of pertinent facts, namely that the inventor refuses to sign after being presented with the application papers or cannot be reached after diligent effort, (3) a statement of the last known address of the inventor, and (4) an oath or declaration by the 37 CFR 1.47(a) applicant on behalf of himself or herself and the non-signing applicant.

Items (1) and (3) were previously satisfied. The petition fee has been paid. Applicants list the last known addresses for the non-signing inventor as:

Changhee Min, Kum-na-mu Apartment, 201-803 Doonsan-dong, Suh-ku Daejons, Korea

Item (2) has now been satisfied. Applicants have sent a complete copy of the application papers to applicant's last known address and have followed it with a complete copy of the application papers sent to applicant's last known email address. A signed declaration has not been received from the inventor.

Item (4) has now been satisfied. The declarations of the inventors are now in compliance with 37 CFR 1.497(a)-(b). While the declaration executed by the legal representative of Murray Goodman would not comply with 37 CFR 1.497(a)-(b) and 37 CFR 1.42, applicants previously complied with this requirement on 02 February 2007.

CONCLUSION

For the above reasons, applicants' petition under 37 CFR 1.47(a) is **GRANTED**.

As provided in 37 CFR 1.47(a), a notice of the filing of this application will be forwarded to the nonsigning inventor at his last known address of record.

A notice of the filing of the application under 37 CFR 1.47(a) will be published in the Official Gazette.

This application is being forwarded to the National Stage Processing Branch of the Office of Patent Application Processing for continued national stage processing of the application, including accordation of a 35 U.S.C. §371(c)(1), (c)(2) and (c)(4) date of **07 November 2007**.

Erin P. Thomson

Erin P. Thomson
Attorney Advisor
PCT Legal Administration

Telephone: 571-272-3292
Facsimile: 571-273-0459

UNITED STATES PATENT AND TRADEMARK OFFICE

Commissioner for Patents
United States Patent and Trademark Office
P.O. Box 1450
Alexandria, VA 22313-1450
www.uspto.gov

0 9 JAN 2008

Changhee Min
Kum-na-mu Apartment
201-803 Doonsan-dong
Suh-ku Daejons
Korea

In re Application of
GOODMAN, Murray et al.
Application No.: 10/522,130
PCT No.: PCT/US03/22772
Int. Filing Date: 18 July 2003
Priority Date: 19 July 2002
Attorney Docket No.: SDUC1100-1
For: DENDRIMERS AS MOLECULAR TRANSLOCATORS

Dear Mr. Min:

You are named as an inventor in the above-captioned United States national stage application, filed under the provisions of 37 CFR 1.47(a) and 35 U.S.C. 116. Should a patent be granted, you will be designated as an inventor.

As a named inventor, you are entitled to inspect any paper in the file wrapper of the application, order copies of all or any part thereof (at a prepaid cost per 37 CFR 1.19) or to make your position of record in the application. Alternatively, you may arrange to do any of the preceding through a registered patent agent or attorney presenting written authorization from you. The counsel for the applicant is listed below. Joining in the application would entail the filing of an appropriate oath or declaration by you pursuant to 37 CFR 1.63.

Erin P. Thomson

Erin P. Thomson
Attorney Advisor
PCT Legal Administration

Telephone: 571-272-3292
Facsimile: 571-273-0459

FOLEY & LARDNER LLP
P.O. BOX 80278
SAN DIEGO, CA 92138-0278

UNITED STATES PATENT AND TRADEMARK OFFICE

Commissioner for Patents
United States Patent and Trademark Office
P.O. Box 1450
Alexandria, VA 22313-1450
www.uspto.gov

SUGHRUE MION, PLLC
2100 PENNSYLVANIA AVENUE, N.W.
SUITE 800
WASHINGTON, DC 20037

COPY MAILED

NOV 1 0 2008

OFFICE OF PETITIONS

In re Patent No. 7,250,861	:	
Issue Date: July 31, 2007	:	
Application No. 10/522,135	:	NOTICE
Filed: January 24, 2005	:	
Attorney Docket No. Q85896	:	

This is a notice regarding your request for acceptance of a fee deficiency submission under 37 CFR 1.28.

The Office no longer investigates or rejects original or reissue patent under 37 CFR 1.56. **1098 Off. Gaz. Pat. Office 502 (January 3, 1989)**. Therefore, nothing in this Notice is intended to imply that an investigation was done.

Your fee deficiency submission under 37 CFR 1.28 is hereby **ACCEPTED**.

This patent is no longer entitled to small entity status. Accordingly, all future fees paid in this patent must be paid at the large entity rate.

Inquiries related to this communication should be directed to the undersigned at (571) 272-6059.

The patent file will be forwarded to the Files Repository.

Alicia Kelley
Petitions Examiner
Office of Petitions