UNITED STATES PATENT AND TRADEMARK OFFICE

Commissioner for Patents
United States Patent and Trademark Office
P.O. Box 1450
Alexandria, VA 22313-1450
www.uspto.gov

28 NOV 2005

EDWARDS & ANGELL, LLP
PO Box 55874
Boston, MA 02205

| | | |
|---|---|---|
| In re Application of | : | |
| HONDA, Mitsuru, et. al. | : | |
| Application No.: 10/525,614 | : | DECISION |
| PCT No.: PCT/JP03/07169 | : | |
| Int. Filing Date: 05 June 2003 | : | |
| Priority Date: 30 August 2002 | : | |
| Attorney's Docket No.: 62937(70904) | : | |
| For: BASIC MATERIAL FOR PATTERNING AND | : | |
| PATTERNING METHOD | : | |

This decision is in response to applicants' "Request For Corrected Filing Receipt" filed 04 August 2005 seeking correction of the application title.

## BACKGROUND

On 05 June 2003, applicants filed international application PCT/JP03/07169 which claimed a priority date of 30 August 2002 and which designated the United States. On 18 March 2003, a copy of the international application was communicated to the United States Patent And Trademark Office ("USPTO") by the International Bureau ("IB"). The deadline for payment of the basic national fee was thirty months after the priority date, i.e. 28 February 2005.

On 24 February 2004, applicant filed a transmittal letter for entry into the national stage in the United States accompanied by, among other materials, payment of the basic national fee.

On 18 July 2005, the United States Designated/Elected Office (DO/EO/US) mailed a Notification Of Acceptance (Form PCT/DO/EO/903) indicating that the requirements of 35 U.S.C. 371(c)(1), (c)(2), and (c)(4) were satisfied as of 24 February 2005.

Also on 18 July 2005, the USPTO issued a filing receipt. The filing receipt identified the title of the present application as "Basic Material For Patterning And Patterning Method." This is the English translation of the title set forth on the published international application.

On 04 August 2005, applicants filed the request for corrected filing receipt considered herein. The submission asks that the title be corrected to "Pattern Formation Substrate And Pattern Forming Method." This is the title set forth on the transmittal letter, declaration, and specification filed by applicants on 24 February 2004.

## DISCUSSION

Section 1893.03(e)(1) of the Manual Of Patent Examining Procedure (MPEP) states the following regarding the title that the USPTO will use in national stage applications:

> [T]he Office will normally use the title of the invention indicated on the cover page of the publication as the title of the national stage application that will appear on the filing receipt. The cover page will include an English translation of the title if the international application was published in a foreign language. See PCT Rule 48.3 (c). Applicants desiring to have the filing receipt reflect a title that is different than the English language title appearing on the cover page must submit either a preliminary amendment amending the title or an application data sheet (37 CFR 1.76) with the desired title.

Here, as set forth in the MPEP, the USPTO has assigned the national stage application the "title of the invention indicated on the cover page of the publication." Applicants have not filed either a preliminary amendment or an application data sheet (ADS) to change the title. Accordingly, applicants' present request to modify the title of the present application cannot be granted on the present record.

## CONCLUSION

Applicants' request for a corrected filing receipt is **DISMISSED** without prejudice.

The title of record herein remains "Basic Material For Patterning And Patterning Method," the title of the invention indicated on the cover of the international publication.

Richard Ross
Attorney Advisor
Office of PCT Legal Administration
Telephone: (571) 272-3296
Facsimile: (571) 273-0459

UNITED STATES PATENT AND TRADEMARK OFFICE

Commissioner for Patents
United States Patent and Trademark Office
P.O. Box 1450
Alexandria, VA 22313-1450
www.uspto.gov

**July 8, 2008**

Carol P. Johns
TOWNSEND and TOWSEND and CREW LLP
Two Embarcadero Center, Eight Floor
San Francisco, CA 94111-3834

Patent No.: 7371843 B2
Application No.: 10/525,621
Inventor(s): Yuko Kiyosue, et al.
Issued: May 13, 2008
Title: **CULTURED *XENOPUS LAEVIS* CELL LINES EXPRESSING MUTANT *ADENOMATOUS POLYPOSIS COLI* GENE**

Re: Request for Certificate of Correction

Consideration has been given your request for the issuance of a certificate of correction for the above-identified patent under the provisions of Rule(s) 1.322 and/or 1.323.

Assignees' names and addresses (assignment data) printed in a patent, are based *solely* on information supplied in the appropriate space for identifying the assignment data, i.e., item 3 of the Issue Fee Transmittal Form PTOL-85B. Granting of a request under 37 CFR 3.81(b) is required to correct applicant's error providing ***incorrect or erroneous*** assignment data, *before* issuance of a Certificate of Correction, under 37 CFR 1.323 *(see Manual of Patent Examining Procedures (M.P.E.P) Chp.1400, sect. 1481).* This procedure is required *at any time after the issue fee is paid*, including after issuance of the patent.

In view of the foregoing, your request, in this mater, is hereby denied.

A request to correct the Assignee under 37 CFR 3.81(b) should include:

A. **the processing fee set forth in 37 CFR 1.117(h) (currently $130);**
B. a statement that the failure to include the correct assignee name on the PTOL-85B was inadvertent; and

Copy

C. a copy of the Notice of Recordation of Assignment Document, reflecting the reel and frame number where the assignment(s) is recorded and/or reflecting proof of *the date* the assignment was submitted for recordation.

*In the Request*, Applicant(s) may request that the file be forwarded to Certificates of Correction Branch, for issuance of a Certificate of Correction, if the Request is granted.

Any request under 37 CFR 3.81(b) should be directed to the following address or facsimile number:

| | |
|---|---|
| By mail: | Mail Stop PETITIONS<br>Commissioner for Patents<br>Post Office Box 1450<br>Alexandria, VA 22313-1450 |
| By hand: | Customer Service Window<br>Mail Stop Petitions<br>Randolph Building<br>401 Dulany Street<br>Alexandria, VA 22314 |
| By fax: | (571) 273-0025<br>ATTN: Office of Petitions |

If a fee (currently $100) was previously submitted for consideration of a Request for Certificate of Correction, under CFR 1.323, to correct assignment data, no additional fee is required.

**Virginia Tolbert**
For Mary Diggs, Supervisor
Decisions & Certificates
of Correction Branch
(703) **308-9390 ext 113** or (703) 308-8309

vt

UNITED STATES PATENT AND TRADEMARK OFFICE

Commissioner for Patents
United States Patent and Trademark Office
P.O. Box 1450
Alexandria, VA 22313-1450
www.uspto.gov

Paper No.

MAILED

MAY 11 2009

OFFICE OF PETITIONS

TOWNSEND AND TOWNSEND AND CREW, LLP
TWO EMBARCADERO CENTER
EIGHTH FLOOR
SAN FRANCISCO CA 94111-3834

| | |
|---|---|
| In re Application of<br>Yuko Kiyosue et al.<br>Application No. 10/525,621<br>Filing Date: September 7, 2005<br>Patent No. 7,371,843<br>Issue Date: May 13, 2008<br>Attorney Docket Number: 082368-002400US<br>Title: CULTURED XENOPUS LAEVIS CELL LINES EXPRESSING MUTANT ADENOMATOUS POLYPOSIS COLI GENE | DECISION ON PETITION PURSUANT TO 37 C.F.R. § 3.81(B) |

This is a decision on the petition pursuant to 37 C.F.R. § 3.81(b),[1] filed December 10, 2008, to correct the Assignee's information on the Issue Fee Transmittal Form PTOL-85(b).

The petition is **GRANTED**.

With this petition, Petitioner requests that a Certificate of Correction be issued to correct the assignee information that appears on the face of the patent. Petitioner submits a "Certificate of Correction" for this purpose, which indicates that the name of the Assignee should be changed from "Eisai Co., Ltd." to "Eisai R&D Management Co."

1 See Official Gazette, June 22, 2004.

37 C.F.R. § 3.81(b), effective June 25, 2004, reads:

> (b) After payment of the issue fee: Any request for issuance of an application in the name of the assignee submitted after the date of payment of the issue fee, and any request for a patent to be corrected to state the name of the assignee, must state that the assignment was submitted for recordation as set forth in 3.11 before issuance of the patent, and must include a request for a certificate of correction under 1.323 of this chapter (accompanied by the fee set forth in 1.20(a)) and the processing fee set forth in 1.17(i) of this chapter.

Petitioner has set forth that the assignment was submitted for recordation as set forth in 37 C.F.R. § 3.11 before issuance of the patent, and Office records confirm that an assignment was received in the Office on May 9, 2007.

Payment of the required $100 certificate of correction fee is acknowledged. The required $130 processing fee will be charged to Petitioner's Deposit Account in due course, as authorized on the second page of this petition.

The Certificates of Correction Branch will be notified of this decision so that the requested Certificate of Correction can be issued.

Telephone inquiries regarding *this decision* should be directed to the undersigned at (571) 272-3225.[2] Any questions concerning the issuance of a certificate of correction should be directed to the Certificates of Correction Branch at (703) 305-8309.

/Paul Shanoski/
Paul Shanoski
Senior Attorney
Office of Petitions

---

2 Petitioner will note that all practice before the Office should be in writing, and the action of the Office will be based exclusively on the written record in the Office. See 37 C.F.R. § 1.2. As such, Petitioner is reminded that no telephone discussion may be controlling or considered authority for any of Petitioner's further action(s).

UNITED STATES PATENT AND TRADEMARK OFFICE

Commissioner for Patents
United States Patent and Trademark Office
P.O. Box 1450
Alexandria, VA 22313-1450
www.uspto.gov

20 SEP 2006

Thomas P McCrackern
Durect Corporation
10240 Bubb Road
Cupertino CA 95014

| | | |
|---|---|---|
| In re Application of: | : | |
| PUEL, Jean-Luc, et al. | : | DECISION ON PETITION |
| U.S. Application No.: 10/525,624 | : | |
| PCT No.: PCT/US2002/028519 | : | |
| International Filing Date: 06 September 2002 | : | |
| Priority Date: None | : | |
| Atty Docket No.: DURE-034 | : | |
| For: DELIVERY OF MODULATORS OF GLUTAMATE-MEDIATED NEUROTRANSMISSION TO THE INNER EAR | : | |

This decision is issued in response to the "Petition For Reconsideration Of Holding Of Abandonment Under MPEP 711.03" filed 28 July 2006, treated herein as a petition under 37 CFR 1.181. No petition fee is required.

## BACKGROUND

On 06 September 2002, applicants filed international application PCT/US2002/028519. The application did not claim an earlier priority date, and it designated the United States. The deadline for submission of the basic national fee was thirty months from the priority date, i.e., 06 March 2005.

On 24 February 2005, applicant filed a Transmittal Letter for entry into the national stage in the United States accompanied by, among other materials, payment of the basic national fee.

On 02 September 2005, the United States Designated/Elected Office (DO/EO/US) mailed a Notification Of Missing Requirements (Form (PCT/DO/EO/905) requiring submission of an oath or declaration in compliance with 37 CFR 1.497.

On 19 July 2006, the DO/EO/US mailed a Notification Of Abandonment (Form PCT/DO/EO/909) indicating that the application was abandoned for failure to file a response to the Notification Of Missing Requirements.

On 28 July 2006, the petition considered herein was filed. The petition asserts that, on 01 November 2005, applicants filed a timely response to the Notification Of Missing Requirements that included an executed declaration in compliance with 37 CFR 1.497. A copy of the

previously filed response and a copy of a return postcard that itemizes the 01 November 2005 submission and bears a USPTO receipt stamp dated 03 November 2005 accompany the petition.

## DISCUSSION

Based on the statements in the present petition and the itemized return postcard bearing the USPTO receipt stamp, it is concluded that materials accompanying the present petition (including the executed declaration) were originally filed herein on 03 November 2005 as a timely response to the Notification Of Missing Requirements mailed 02 September 2005.

The declaration satisfies the requirements of 37 CFR 1.497.

The Notification of Abandonment mailed 28 July 2006, based as it was on applicants' purported failure to respond to the Notification Of Missing Requirements, is appropriately vacated.

## CONCLUSION

The petition to withdraw the holding of abandonment is **GRANTED**.

The Notification of Abandonment (Form PCT/DO/EO/909) mailed 28 July 2006 is hereby **VACATED**.

The declaration accompanying the present petition will be treated as having been filed on 03 November 2005.

This application is being returned to the National Stage Processing Branch of the International Division for further processing in accordance with this decision. The date under 35 U.S.C. 371(c)(1), (c)(2), and (c)(4) is 03 November 2005.

Richard M. Ross
Attorney Advisor
Office of PCT Legal Administration
Telephone: (571) 272-3296
Facsimile: (571) 273-0459

UNITED STATES PATENT AND TRADEMARK OFFICE

UNITED STATES DEPARTMENT OF COMMERCE
United States Patent and Trademark Office
Address: COMMISSIONER FOR PATENTS
P.O. Box 1450
Alexandria, Virginia 22313-1450
www.uspto.gov

FULWIDER PATTON LLP
HOWARD HUGHES CENTER
6060 CENTER DRIVE, TENTH FLOOR
LOS ANGELES, CA 90045

Mail Date: 06/08/2010

| | | |
|---|---|---|
| **Applicant** | : Jeffrey Callister | : DECISION ON REQUEST FOR |
| **Patent Number** | : 7666215 | : RECALCULATION of PATENT |
| **Issue Date** | : 02/23/2010 | : TERM ADJUSTMENT IN VIEW |
| **Application No** | : 10/525,625 | : OF WYETH AND NOTICE OF INTENT TO |
| **Filed** | : 10/03/2005 | : ISSUE CERTIFICATE OF CORRECTION |
| | | : |

The Request for Recalculation is **GRANTED** to the extent indicated.

The patent term adjustment has been determined to be **1088** days. The USPTO will *sua sponte* issue a certificate of correction reflecting the amount of PTA days determined by the recalculation.

Prior to the issuance of the certificate of correction, the USPTO will afford patentee an opportunity to be heard and request reconsideration. Accordingly, patentee has **one month or thirty (30) days**, whichever is longer, to file a request for reconsideration of this patent term adjustment calculation. See 35 U.S.C. 154(b)(3)(B)(ii) and 37 CFR 1.322(a)(4). No extensions of time will be granted under 37 CFR 1.136.

Patentee should use document code PET.OP if electronically filing a request for reconsideration of this patent term adjustment calculation. The patentee must also include the information required by 37 CFR 1.705(b)(2) and the fee required by 37 CFR 1.18(e). If patentee does not file a timely request for reconsideration of this patent term adjustment calculation including the information required by 37 CFR 1.705(b)(2) and the fee required by 37 CFR 1.18(e), the USPTO will issue a certificate of correction reflecting the PTA determination noted above.

Patentee should be aware that in order to preserve the right to review in the United States District Court for the District of Columbia of the USPTO patent term adjustment determination, patentee must ensure that he or she also take the steps required under 35 U.S.C. 154(b)(4)(A) in a timely manner. Nothing in the request for recalculation should be construed as providing an alternative time frame for commencing a civil action under 35 U.S.C. 154(b)(4)(A).

Any questions concerning this decision should be directed to the Office of Patent Legal Administration at 571-272-7702.

UNITED STATES PATENT AND TRADEMARK OFFICE

Commissioner for Patents
United States Patent and Trademark Office
P.O. Box 1450
Alexandria, VA 22313-1450
www.uspto.gov

**The Webb Law Firm, P.C.**
**700 Koppers Building**
**436 Seventh Avenue**
**Pittsburgh, PA 15219**

COPY MAILED

APR 0 3 2008

OFFICE OF PETITIONS

| | | |
|---|---|---|
| In re Application of | : | |
| Yves Hatzfeld et al. | : | |
| Application No. 10/525,647 | : | DECISION ON PETITION |
| Filed: February 24, 2005 | : | TO WITHDRAW |
| Attorney Docket No. 4559-045632 | : | FROM RECORD |
| | : | |

This is a decision on the Request to Withdraw as attorney or agent under 37 C.F.R. § 1.36(b) filed February 25, 2008.

The request is **NOT APPROVED**.

A review of the file record indicates that Kirk M. Miles does not have power of attorney in this patent application. See 37 C.F.R. § 10.40. Accordingly, the request to withdraw under 37 C.F.R. § 1.36(b) is not applicable.

All future communications from the Office will continue to be directed to the below-listed address until otherwise properly notified by the applicant.

There are no outstanding Office actions at this time.

Telephone inquires concerning this decision should be directed to Kimberly Inabinet at 571-272-4618.

Kimberly Inabinet
Petitions Examiner
Office of Petitions

cc: Barbara E. Johnson
436 Seventh Avenue
700 Koppers Building
Pittsburgh, PA 15219-1818

UNITED STATES PATENT AND TRADEMARK OFFICE

UNITED STATES DEPARTMENT OF COMMERCE
United States Patent and Trademark Office
Address: COMMISSIONER FOR PATENTS
P.O. Box 1450
Alexandria, Virginia 22313-1450
www.uspto.gov

COLLARD & ROE, P.C.
1077 NORTHERN BOULEVARD
ROSLYN, NY 11576

Mail Date: 04/21/2010

| | | |
|---|---|---|
| **Applicant** | : Norbert Schrufer | : DECISION ON REQUEST FOR |
| **Patent Number** | : 7618190 | : RECALCULATION of PATENT |
| **Issue Date** | : 11/17/2009 | : TERM ADJUSTMENT IN VIEW |
| **Appliction No** | : 10/525,650 | : OF WYETH AND NOTICE OF INTENT TO |
| **Filed** | : 02/24/2005 | : ISSUE CERTIFICATE OF CORRECTION |
| | | : |

The Request for Recalculation is **GRANTED** to the extent indicated.

The patent term adjustment has been determined to be **1070** days. The USPTO will *sua sponte* issue a certificate of correction reflecting the amount of PTA days determined by the recalculation.

Prior to the issuance of the certificate of correction, the USPTO will afford patentee an opportunity to be heard and request reconsideration. Accordingly, patentee has **one month or thirty (30) days**, whichever is longer, to file a request for reconsideration of this patent term adjustment calculation. See 35 U.S.C. 154(b)(3)(B)(ii) and 37 CFR 1.322(a)(4). No extensions of time will be granted under 37 CFR 1.136.

Patentee should use document code PET.OP if electronically filing a request for reconsideration of this patent term adjustment calculation. The patentee must also include the information required by 37 CFR 1.705(b)(2) and the fee required by 37 CFR 1.18(e). If patentee does not file a timely request for reconsideration of this patent term adjustment calculation including the information required by 37 CFR 1.705(b)(2) and the fee required by 37 CFR 1.18(e), the USPTO will issue a certificate of correction reflecting the PTA determination noted above.

Patentee should be aware that in order to preserve the right to review in the United States District Court for the District of Columbia of the USPTO patent term adjustment determination, patentee must ensure that he or she also take the steps required under 35 U.S.C. 154(b)(4)(A) in a timely manner. Nothing in the request for recalculation should be construed as providing an alternative time frame for commencing a civil action under 35 U.S.C. 154(b)(4)(A).

Any questions concerning this decision should be directed to the Office of Patent Legal Administration at 571-272-7702.

20 JUL 2005

UNITED STATES PATENT AND TRADEMARK OFFICE

COMMISSIONER FOR PATENTS
UNITED STATES PATENT AND TRADEMARK OFFICE
P.O. BOX 1450
ALEXANDRIA, VA 22313-1450
www.uspto.gov

John Mion
Sughrue Mion PLLC
2100 Pennsylvania Avenue, N.W.
Washington, D.C. 20037-3213

| | | |
|---|---|---|
| In re Application of | : | |
| FOCKE et al. | : | DECISION ON |
| Application No.: 10/525,652 | : | PAPERS UNDER 37 CFR 1.42 |
| PCT No.: PCT/EP03/09206 | : | |
| Int. Filing Date: 20 August 2003 | : | |
| Priority Date: 26 August 2002 | : | |
| Attorney Docket No.: Q86431 | : | |
| For: CIGARETTE PACKAGING | | |

This decision is in response to the declaration filed 25 February 2005, which is being treated as a request under 37 CFR 1.42. No petition fee is required.

## BACKGROUND

On 20 August 2003, applicants filed international application PCT/EP03/09206, which claimed a priority date of 26 August 2002. A copy of the international application was communicated to the United States Patent and Trademark Office from the International Bureau on 25 March 2004. Pursuant to 37 CFR 1.495, the deadline for payment of the basic national fee in the United States was to expire 30 months from the priority date, 26 February 2005.

On 25 February 2005, applicants filed a transmittal letter for entry into the national stage in the United States accompanied, inter alia, by: the basic national fee; a translation of the international application; a preliminary amendment; and an executed declaration/power of attorney. The declaration is executed by: Valeri Goncharenko and Henry Buse as joint inventors and Doris Focke and Jurgen Focke on behalf of deceased inventor, Heinz Focke.

## DISCUSSION

37 CFR 1.42 *When the Inventor is Dead*, states, in part:

In case of the death of the inventor, the legal representative (executor, administrator, etc.) of the deceased inventor may make the necessary oath or declaration, and apply for and obtain the patent.

The declaration filed 25 February 2005 is executed by Jurgen Focke and Doris Focke as the "legal representatives" of the deceased inventor. The declaration is acceptable under 37 CFR 1.42 and complies with 37 CFR 1.497(a)-(b).

## CONCLUSION

The papers filed under 37 CFR 1.42 are **ACCEPTED**.

This application is being forwarded to the National Stage Processing Branch of the International Division for continued national stage processing.

Anthony Smith
Attorney-Advisor
Office of PCT Legal Administration
Tel.: (571) 272-3298
Fax: (571) 273-0459

UNITED STATES PATENT AND TRADEMARK OFFICE

COMMISSIONER FOR PATENTS
UNITED STATES PATENT AND TRADEMARK OFFICE
P.O. BOX 1450
ALEXANDRIA, VA 22313-1450
www.uspto.gov

NOVARTIS INSTITUTES FOR BIOMEDICAL RESEARCH, INC.
220 MASSACHUSETTS AVENUE
CAMBRIDGE MA 02139

MAILED

APR 16 2009

OFFICE OF PETITIONS

| | | |
|---|---|---|
| In re Application of | : | |
| ALTMANN et al. | : | |
| Application No. 10/525,658 | : | ON APPLICATION FOR |
| Filed: August 23, 2005 | : | PATENT TERM ADJUSTMENT |
| Attorney Docket No. PA/4-32628A | : | |

This is in response to the "PETITION REGARDING PATENT TERM ADJUSTMENT UNDER C.F.R. §1.705(b)" filed March 6, 2009. Applicant requests that the determination of patent term adjustment be corrected from 518 days to 713 days. Applicant requests this correction on the basis that the Office will take in excess of three years to issue this patent and in light of the recent court decision in Wyeth v. Dudas, No. 07-1492 (D.D.C. September 30, 2008).

As the instant application for patent term adjustment requests reconsideration of the patent term adjustment as it relates to the Office's failure to issue the patent within three years of the filing date, a decision is being **held in abeyance** until after the actual patent date. Knowledge of the actual date the patent issues is required to calculate the amount, if any, of additional patent term patentee is entitled to for Office failure to issue the patent within three years. See 37 CFR 1.703(b).

Applicant is given **TWO (2) MONTHS** from the issue date of the patent to file a written request for reconsideration of the patent term adjustment for Office failure to issue the patent within three years. A copy of this decision should accompany the request. Applicant may seek such consideration without payment of an additional fee. However, as to all other bases

for seeking reconsideration of the patent term adjustment indicated in the patent, all requirements of 37 CFR 1.705(d) must be met. Requests for reconsideration on other bases must be timely filed and must include payment of the required fee.

Rather than file the request for reconsideration of Patent Term Adjustment at the time of the mailing of the notice of allowance, applicant is advised that they may wait until the time of the issuance of the patent and file a request for reconsideration of the patent term pursuant to 37 CFR 1.705(d). The USPTO notes that it does not calculate the amount of time earned pursuant to 37 CFR 1.702(b) until the time of the issuance of the patent and accordingly, the Office will consider any request for reconsideration of the patent term adjustment due to an error in the calculation of 37 CFR 1.702(b) to be timely if the request for reconsideration is filed within two months of the issuance of the patent.

The Office acknowledges submission of the $200.00 fee set forth in 37 CFR 1.18(e). No additional fees are required.

The application is being forwarded to the Office of Data Management for issuance of the patent. The patent term adjustment indicated on the patent (as shown on the Issue Notification mailed about three weeks prior to patent issuance) will include any additional adjustment accrued both for Office delay in issuing the patent more than four months after payment of the issue fee and satisfaction of all outstanding requirements, and for the Office taking in excess of three years to issue the patent (to the extent that the three-year period does not overlap with periods already accorded).

Telephone inquiries specific to this decision should be directed to Senior Petitions Attorney, Christina Tartera Donnell, at (571) 272-3211.

Kery A. Fries
Senior Legal Advisor
Office Patent Legal Administration

UNITED STATES PATENT AND TRADEMARK OFFICE

Commissioner for Patents
United States Patent and Trademark Office
P.O. Box 1450
Alexandria, VA 22313-1450
www.uspto.gov

NOVARTIS INSTITUTES FOR
BIOMEDICAL RESEARCH, INC.
220 MASSACHUSETTS AVENUE
CAMBRIDGE MA 02139

**COPY MAILED**

DEC 17 2009

**OFFICE OF PETITIONS**

| | | |
|---|---|---|
| In re Patent No. 7,544,688 | : | |
| ALTMANN et al. | : | DECISION DISMISSING |
| Application No. 10/525,658 | : | REQUEST FOR |
| Issue Date: June 9, 2009 | : | RECONSIDERATION OF |
| Filed: August 23, 2005 | : | PATENT TERM ADJUSTMENT |
| Docket No. PA/4-32628A | : | UNDER 37 CFR 1.705 |

This is in response to the "PETITION REGARDING PATENT TERM AJDUSTMENT POST GRANT UNDER C.F.R. 1.705(d)" filed August 3, 2009. Patentees request that the determination of patent term adjustment be corrected from five hundred eighteen (518) days to eight hundred eight (808) days.

The request for reconsideration of patent term adjustment is **DISMISSED** with respect to making any change in the patent term adjustment determination under 35 U.S.C. § 154(b) of 518 days.

On June 9, 2009, the application matured into U.S. Patent No. 7,544,688, with a revised patent term adjustment of 518 days. The Office determined that the 290 days of Office delay pursuant to 35 U.S.C. 154(b)(1)(B) and 37 CFR 1.702(b) overlaps with the 518 days of Office delay pursuant to 35 U.S.C. § 154(b)(1)(A) and 37 CFR 1.702(a)(1) accorded prior to the issuance of the patent. As such, no additional days of patent term adjustment were entered at issuance under the three-year pendency provision. Given the applicant delay of 0 days, the patent issued with a revised patent term adjustment of 518 (518 - 0) days.

On August 3, 2009, patentees timely submitted this request for reconsideration of patent term adjustment, asserting that the correct number of days of Patent Term Adjustment is 808 days under the court's interpretation of the overlap provision as set forth in Wyeth v. Dudas, 580 F. Supp. 2d 138, 88 U.S.P.Q. 2d 1538 (D.D.C. 2008).

Patentees' interpretation of the period of overlap has been considered, but found inconsistent with the Office's interpretation of the overlap provision, 35 U.S.C. 154(b)(2)(A). 35 U.S.C. 154(b)(2)(A) limits the adjustment of patent term, as follows:

> to the extent that the periods of delay attributable to grounds specified in paragraph (1) overlap, the period of any adjustment granted under this subsection shall not exceed the actual number of days the issuance of the patent was delayed.

As explained in *Explanation of 37 CFR 1.703(f) and of the United States Patent and Trademark Office Interpretation of 35 U.S.C. 154(b)(2)(A)*, 69 Fed. Reg. 34283 (June 21, 2004), the Office interprets 35 U.S.C. 154(b)(2)(A) as permitting either patent term adjustment under 35 U.S.C. 154(b)(1)(A)(i)-(iv), or patent term adjustment under 35 U.S.C. 154(b)(1)(B), but not as permitting patent term adjustment under both 35 U.S.C. 154(b)(1)(A)(i)-(iv) and 154(b)(1)(B). Accordingly, the Office implements the overlap provision as follows:

> If an application is entitled to an adjustment under 35 U.S.C. 154(b)(1)(B), the entire period during which the application was pending (except for periods excluded under 35 U.S.C. 154(b)(1)(B)(i)-(iii)), and not just the period beginning three years after the actual filing date of the application, is the period of delay under 35 U.S.C. 154(b)(1)(B) in determining whether periods of delay overlap under 35 U.S.C. 154(b)(2)(A). Thus, any days of delay for Office issuance of the patent more than 3 years after the filing date of the application, which overlap with the days of patent term adjustment accorded prior to the issuance of the patent will not result in any additional patent term adjustment. See 35 U.S.C. 154(b)(1)(B), 35 U.S.C. 154(b)(2)(A), and 37 CFR § 1.703(f). See *Changes to Implement Patent Term Adjustment Under Twenty Year Term; Final Rule*, 65 Fed. Reg.

56366 (Sept. 18, 2000). See also *Revision of Patent Term Extension and Patent Term Adjustment Provisions; Final Rule*, 69 Fed. Reg. 21704 (April 22, 2004), 1282 Off. Gaz. Pat. Office 100 (May 18, 2004). See also *Explanation of 37 CFR 1.703(f) and of the United States Patent and Trademark Office Interpretation of 35 U.S.C. 154(b)(2)(A)*, 69 Fed. Reg. 34283 (June 21, 2004).

Further, as stated in the *Explanation of 37 CFR 1.703(f) and of the United States Patent and Trademark Office Interpretation of 35 U.S.C. 154(b)(2)(A)*, the Office has consistently taken the position that if an application is entitled to an adjustment under the three-year pendency provision of 35 U.S.C. 154(b)(1)(B), the entire period during which the application was pending before the Office (except for periods excluded under 35 U.S.C. 154(b)(1)(B)(i)-(iii)), and not just the period beginning three years after the actual filing date of the application, is the relevant period under 35 U.S.C. 154(b)(1)(B) in determining whether periods of delay "overlap" under 35 U.S.C. 154(b)(2)(A).

This interpretation is consistent with the statute. Taken together the statute and rule provide that to the extent that periods of delay attributable to grounds specified in 35 U.S.C. 154(b)(1) and in corresponding § 1.702 overlap, the period of adjustment granted shall not exceed the actual number of days the issuance of the patent was delayed.

In this instance, the relevant period under 35 U.S.C. 154(b)(1)(B) in determining whether periods of delay "overlap" under 35 U.S.C. 154(b)(2)(A) is the period during which the application was pending before the Office beginning on the application filing date under 35 U.S.C. 111(a), August 23, 2005, and ending on the date of issuance of the patent, June 9, 2009 (not including any other periods excluded under 35 U.S.C. 154(b)(1)(B)(i)-(iii)).

Pursuant to 35 U.S.C. 154(b)(1)(A) and 37 CFR 1.702(a)(1), 518 days of patent term adjustment were accorded during the pendency of the application for Office delay. Pursuant to 35 U.S.C. 154(b)(1)(B) and 37 CFR 1.702(b), 290 days of patent term adjustment accrued for Office issuance of the patent more than 3 years after the filing date of the application.

The 290 days of patent term adjustment under 37 CFR 1.702(b) overlap with the 518 days of patent term adjustment under 37 CFR

1.702(a)(1). Entry of both the 518 days and the 290 days is neither permitted nor warranted. 518 days is the actual number of days issuance of the patent was delayed.

Accordingly, at issuance, the Office properly entered no additional days of adjustment pursuant to § 1.702(b) for a total of the greater period of 518 days for Office delay.

In view thereof, no change will be made in the patent term adjustment of 518 days (518 days of Office delay - 0 days of applicant delay).

The Office acknowledges the previous submission of the $200.00 fee set forth in 37 CFR 1.18(e). No additional fees are required.

Telephone inquiries specific to this matter should be directed to the undersigned at (571) 272-3211.

Christina Tartera Donnell

Christina Tartera Donnell
Senior Petitions Attorney
Office of Petitions

UNITED STATES PATENT AND TRADEMARK OFFICE

UNITED STATES DEPARTMENT OF COMMERCE
United States Patent and Trademark Office
Address: COMMISSIONER FOR PATENTS
P.O. Box 1450
Alexandria, Virginia 22313-1450
www.uspto.gov

FINNEGAN, HENDERSON, FARABOW, GARRETT & DUNNER LLP
901 NEW YORK AVENUE, NW
WASHINGTON, DC 20001-4413

Mail Date: 04/23/2010

| | | |
|---|---|---|
| **Applicant** | : Tohru Kimura | : DECISION ON REQUEST FOR |
| **Patent Number** | : 7606136 | : RECALCULATION of PATENT |
| **Issue Date** | : 10/20/2009 | : TERM ADJUSTMENT IN VIEW |
| **Appliction No** | : 10/525,660 | : OF WYETH AND NOTICE OF INTENT TO |
| **Filed** | : 02/25/2005 | : ISSUE CERTIFICATE OF CORRECTION |
| | | : |

The Request for Recalculation is **GRANTED** to the extent indicated.

The patent term adjustment has been determined to be **1187** days. The USPTO will *sua sponte* issue a certificate of correction reflecting the amount of PTA days determined by the recalculation.

Prior to the issuance of the certificate of correction, the USPTO will afford patentee an opportunity to be heard and request reconsideration. Accordingly, patentee has **one month or thirty (30) days**, whichever is longer, to file a request for reconsideration of this patent term adjustment calculation. See 35 U.S.C. 154(b)(3)(B)(ii) and 37 CFR 1.322(a)(4). No extensions of time will be granted under 37 CFR 1.136.

Patentee should use document code PET.OP if electronically filing a request for reconsideration of this patent term adjustment calculation. The patentee must also include the information required by 37 CFR 1.705(b)(2) and the fee required by 37 CFR 1.18(e). If patentee does not file a timely request for reconsideration of this patent term adjustment calculation including the information required by 37 CFR 1.705(b)(2) and the fee required by 37 CFR 1.18(e), the USPTO will issue a certificate of correction reflecting the PTA determination noted above.

Patentee should be aware that in order to preserve the right to review in the United States District Court for the District of Columbia of the USPTO patent term adjustment determination, patentee must ensure that he or she also take the steps required under 35 U.S.C. 154(b)(4)(A) in a timely manner. Nothing in the request for recalculation should be construed as providing an alternative time frame for commencing a civil action under 35 U.S.C. 154(b)(4)(A).

Any questions concerning this decision should be directed to the Office of Patent Legal Administration at 571-272-7702.

UNITED STATES PATENT AND TRADEMARK OFFICE

UNITED STATES DEPARTMENT OF COMMERCE
United States Patent and Trademark Office
Address: COMMISSIONER FOR PATENTS
P.O. Box 1450
Alexandria, Virginia 22313-1450
www.uspto.gov

KENYON & KENYON LLP
ONE BROADWAY
NEW YORK, NY 10004

Mail Date: 04/21/2010

| | | |
|---|---|---|
| **Applicant** | : Kevin Jeffrey Kittle | : DECISION ON REQUEST FOR |
| **Patent Number** | : 7601472 | : RECALCULATION of PATENT |
| **Issue Date** | : 10/13/2009 | : TERM ADJUSTMENT IN VIEW |
| **Appliction No** | : 10/525,678 | : OF WYETH AND NOTICE OF INTENT TO |
| **Filed** | : 02/01/2005 | : ISSUE CERTIFICATE OF CORRECTION |
| | | : |

The Request for Recalculation is **GRANTED** to the extent indicated.

The patent term adjustment has been determined to be **759** days. The USPTO will *sua sponte* issue a certificate of correction reflecting the amount of PTA days determined by the recalculation.

Prior to the issuance of the certificate of correction, the USPTO will afford patentee an opportunity to be heard and request reconsideration. Accordingly, patentee has **one month or thirty (30) days**, whichever is longer, to file a request for reconsideration of this patent term adjustment calculation. See 35 U.S.C. 154(b)(3)(B)(ii) and 37 CFR 1.322(a)(4). No extensions of time will be granted under 37 CFR 1.136.

Patentee should use document code PET.OP if electronically filing a request for reconsideration of this patent term adjustment calculation. The patentee must also include the information required by 37 CFR 1.705(b)(2) and the fee required by 37 CFR 1.18(e). If patentee does not file a timely request for reconsideration of this patent term adjustment calculation including the information required by 37 CFR 1.705(b)(2) and the fee required by 37 CFR 1.18(e), the USPTO will issue a certificate of correction reflecting the PTA determination noted above.

Patentee should be aware that in order to preserve the right to review in the United States District Court for the District of Columbia of the USPTO patent term adjustment determination, patentee must ensure that he or she also take the steps required under 35 U.S.C. 154(b)(4)(A) in a timely manner. Nothing in the request for recalculation should be construed as providing an alternative time frame for commencing a civil action under 35 U.S.C. 154(b)(4)(A).

Any questions concerning this decision should be directed to the Office of Patent Legal Administration at 571-272-7702.

UNITED STATES PATENT AND TRADEMARK OFFICE

Commissioner for Patents
United States Patent and Trademark Office
P.O. Box 1450
Alexandria, VA 22313-1450
www.uspto.gov

CONNORS ASSOCIATES
1600 DOVE ST
SUITE 220
NEWPORT BEACH, CA 92660

**COPY MAILED**

JUL 3 1 2006

**OFFICE OF PETITIONS**

| | | |
|---|---|---|
| In re Application of | : | |
| David Nickel | : | |
| Application No. 10/525,684 | : | DECISION ON PETITION |
| Filed: February 22, 2005 | : | TO WITHDRAW |
| Attorney Docket No. 9320e | : | FROM RECORD |
| | : | |

This is a decision on the Request to Withdraw as attorney or agent of record under 37 C.F.R. § 1.36(b), filed March 30, 2006.

The request is **APPROVED**.

A grantable request to withdraw as attorney/agent of record must be signed by every attorney/agent seeking to withdraw or contain a clear indication that one attorney is signing on behalf of another/others. A request to withdraw will not be approved unless at least 30 (thirty) days would remain between the date of approval and the later of the expiration date of a time to file a response or the expiration date of the maximum time period which can be extended under 37 C.F.R. § 1.136(a).

The request was signed by John J. Connors on behalf of all attorneys of record who are associated with Customer No. 21905.

Applicant is reminded that there is no attorney of record at this time.

All future correspondence will be directed to the first named inventor David Nickel at the address indicated below.

Telephone inquiries concerning this decision should be directed to Irvin Dingle at (571) 272-3210.

for Denise Pothier
Petitions Examiner
Office of Petitions

cc: David Nickel
1530 Lincoln Blvd. #E
Santa Monica, CA 90401

UNITED STATES PATENT AND TRADEMARK OFFICE

UNITED STATES DEPARTMENT OF COMMERCE
United States Patent and Trademark Office
Address: COMMISSIONER FOR PATENTS
P.O. Box 1450
Alexandria, Virginia 22313-1450
www.uspto.gov

| APPLICATION NUMBER | FILING OR 371 (c) DATE | FIRST NAMED APPLICANT | ATTY. DOCKET NO./TITLE |
|---|---|---|---|
| 10/525,684 | 02/22/2005 | David Nickel | 9320e |

**CONFIRMATION NO. 9200**

*OC000000019809452*

*OC000000019809452*

021905
CONNORS ASSOCIATES
1600 DOVE ST
SUITE 220
NEWPORT BEACH, CA 92660

Date Mailed: 07/28/2006

## NOTICE REGARDING CHANGE OF POWER OF ATTORNEY

This is in response to the Power of Attorney filed 03/30/2006.

- The withdrawal as attorney in this application has been accepted. Future correspondence will be mailed to the new address of record. 37 CFR 1.33.

---

IRVIN DINGLE
OP (571) 272-3210

FORMER ATTORNEY/AGENT COPY

21 JUL 2005

United States Patent and Trademark Office

#4

Commissioner for Patents
United States Patent and Trademark Office
P.O. Box 1450
Alexandria, VA 22313-1450
www.uspto.gov

Michael J. Herman
Minerals Technologies Inc.
One Highland Avenue
Bethlehem, PA 18017

| | | |
|---|---|---|
| In re Application of | : | |
| Kirchhoff | : | |
| Application No.: 10/525,686 | : | |
| PCT No.: PCT/EP03/05332 | : | |
| Int. Filing Date: 21 May 2003 | : | DECISION |
| Priority Date: 24 May 2002 | : | |
| Attorney Docket No.: DN 02-011 | : | |
| For: A Method For Repairing A Protective Lining | : | |
| Of An Industrial Reaction Or Transport Vessel | : | |

The petition to revive under 37 CFR 1.137(b) filed 22 February 2005 in the above-captioned application is hereby **GRANTED** as follows:

Applicant states that "the entire delay in filing the required reply from the due date for the reply until the filing of a grantable petition pursuant to 37 CFR 1.137(b) was unintentional." This statement is being accepted in satisfaction of 37 CFR 1.137(b)(3).

A review of the application file reveals that the basic national fee of $300.00 was provided. The required petition fee of $1500.00 was also paid. Thus, the requirements of 37 CFR 1.137(b) have been satisfied. Therefore, the request to revive the application abandoned under 35 U.S.C. 371(d) is granted as to the National stage in the United States of America.

This application is being forwarded to the United States Designated/Elected Office for further processing. The date of the application under 35 U.S.C. 371(c)(1), (2) and (4) is **22 February 2005**.

Leonard Smith
PCT Legal Examiner
PCT Legal Office

George M. Dombroske
PCT Legal Examiner
PCT Legal Office
Tel: (571) 272-3283
Fax: (571) 273-0459

#6

UNITED STATES PATENT AND TRADEMARK OFFICE

Commissioner for Patents
United States Patent and Trademark Office
P.O. Box 1450
Alexandria, VA 22313-1450
www.uspto.gov

24 AUG 2006

Michael Harlin
McAndrews Held & Malloy
500 W. Madison Street
Suite 3400
Chicago, IL 60661

| | | |
|---|---|---|
| In re Application of | : | |
| HUESCA, Mario et al. | : | |
| Application No.: 10/525,690 | : | DECISION ON |
| PCT No.: PCT/CA03/01229 | : | |
| Int. Filing Date: 19 August 2003 | : | PETITION |
| Priority Date: 19 August 2002 | : | |
| Attorney Docket No.: 16526US01 | : | UNDER 37 CFR 1.47(a) |
| For: 2, 4, 5 – TRISUBSTITUTED ... ANTI- | : | |
| MICROBIAL AGENTS | : | |

This is a decision on applicants' "Petition Under 37 C.F.R. §1.47," filed in the United States Patent and Trademark Office (USPTO) on 07 February 2006.

## BACKGROUND

On 19 August 2003, applicants filed international application PCT/CA03/01229, claiming a priority date of 19 August 2002. A copy of the international application was transmitted to the Office on 26 February 2004. The thirty-month period for paying the basic national fee in the United States expired at midnight on 22 February 2005 (19 February 2005 was a Saturday and 21 February 2005 was a holiday).

On 22 February 2005, applicants filed a submission for entry into the national stage in the United States which was accompanied by, *inter alia*, the U.S. Basic National Fee.

On 07 July 2005, the Office mailed Notification of Missing Requirements (Form PCT/DO/EO/905) indicating that an oath or declaration and the surcharge for late filing of the oath or declaration were required.

On 07 February 2006, applicants submitted a petition under 37 CFR 1.47(a), which was accompanied by, *inter alia*, a declaration of inventorship and a supporting declaration. The petition included the fee for a five month extension of time.

## DISCUSSION

A petition under 37 CFR 1.47 must be accompanied by: (1) the fee under 37 CFR 1.17(h), (2) proof of pertinent facts, namely that the inventor refuses to sign after being presented with the application papers or cannot be reached after diligent effort, (3) a statement of the last known address of the inventor, and (4) an oath or declaration by the 37 CFR 1.47(a) applicant on behalf of himself or herself and the non-signing applicant.

Items (1), (3), and (4) have been satisfied. The $200 petition fee has been paid. Applicants list Raed Al-Qawasmeh's address as 15 Vicora Linkway; North York, Ontario M3C 1A8; Canada. The declaration complies with 37 CFR 1.497(a)-(b) and 37 CFR 1.47(a).

Item (2) has not been satisfied. Applicants claim that they have been unable to locate the inventor after a diligent effort, but the basis of this assertion is unclear as the package sent to his last known address was not returned as undeliverable. It is not clear that this package included a complete copy of the application papers, including the declaration, as is required. Copies of documentary evidence and a detailed statement from someone with first hand knowledge of the contacts is required. The statement of Dianne Singer does not set out the times and dates of her attempted contacts, printouts of her database searches or a detailed description of what was sent to the inventor.

Further, though applicants know the address of the non-signing inventor's attorney, applicants have not sent a complete copy of the application papers to the inventor's counsel. MPEP 409.03(d).

## CONCLUSION

For the above reasons, applicants' petition under 37 CFR 1.47(a) is **DISMISSED** without prejudice.

If reconsideration on the merits of this petition is desired, a proper response must be filed within TWO (2) MONTHS from the mail date of this decision. Failure to timely file the proper response will result in abandonment of this application. Any reconsideration request should include a cover letter entitled "Renewed Petition Under 37 CFR 1.47(a)." No additional petition fee is required.

Any further correspondence with respect to this matter should be addressed to the Mail Stop PCT, Commissioner for Patents, Office of PCT Legal Administration, P.O. Box 1450, Alexandria, Virginia 22313-1450, with the contents of the letter marked to the attention of the Office of PCT Legal Administration.

Erin P. Thomson

Erin P. Thomson
Attorney Advisor
PCT Legal Administration

Telephone: 571-272-3292
Facsimile: 571-273-0459

#8

UNITED STATES PATENT AND TRADEMARK OFFICE

Commissioner for Patents
United States Patent and Trademark Office
P.O. Box 1450
Alexandria, VA 22313-1450
www.uspto.gov

24 NOV 2006

Michael Harlin
McAndrews Held & Malloy
500 W. Madison Street
Suite 3400
Chicago, IL 60661

| | | |
|---|---|---|
| In re Application of | : | |
| HUESCA, Mario et al. | : | |
| Application No.: 10/525,690 | : | DECISION ON |
| PCT No.: PCT/CA03/01229 | : | |
| Int. Filing Date: 19 August 2003 | : | PETITION |
| Priority Date: 19 August 2002 | : | |
| Attorney Docket No.: 16526US01 | : | UNDER 37 CFR 1.47(a) |
| For: 2, 4, 5 – TRISUBSTITUTED ... ANTI- | : | |
| MICROBIAL AGENTS | : | |

This is a decision on applicants' "Renewed Petition Under 37 C.F.R. §1.47(a)," filed in the United States Patent and Trademark Office (USPTO) on 24 October 2006.

## BACKGROUND

On 19 August 2003, applicants filed international application PCT/CA03/01229, claiming a priority date of 19 August 2002. A copy of the international application was transmitted to the Office on 26 February 2004. The thirty-month period for paying the basic national fee in the United States expired at midnight on 22 February 2005 (19 February 2005 was a Saturday and 21 February 2005 was a holiday).

On 22 February 2005, applicants filed a submission for entry into the national stage in the United States which was accompanied by, *inter alia*, the U.S. Basic National Fee.

On 07 July 2005, the Office mailed Notification of Missing Requirements (Form PCT/DO/EO/905) indicating that an oath or declaration and the surcharge for late filing of the oath or declaration were required.

On 07 February 2006, applicants submitted a petition under 37 CFR 1.47(a), which was accompanied by, *inter alia*, a declaration of inventorship and a supporting declaration. The petition included the fee for a five month extension of time.

On 24 August 2006, the Office mailed Decision On Petition Under 37 CFR 1.47(a), dismissing applicants' petition without prejudice and setting a two month period for reply.

On 24 October 2006, applicants filed this renewed petition under 37 CFR 1.47(a), accompanied by a declaration of the inventors.

## DISCUSSION

The declaration submitted on 24 October 2006 complies with 37 CFR 1.497(a)-(b).

## CONCLUSION

For the above reasons, applicants' petition under 37 CFR 1.47(a) is **DISMISSED AS MOOT**.

This application is being forwarded to the National Phase Processing Branch of the Division of PCT Operations for further action consistent with this decision. The application has a 35 U.S.C. 371(c)(1), (c)(2) and (c)(4) date of 24 October 2006.

Erin P. Thomson

Erin P. Thomson
Attorney Advisor
PCT Legal Administration

Telephone: 571-272-3292
Facsimile: 571-273-0459

03 JUL 2006

#6

UNITED STATES PATENT AND TRADEMARK OFFICE

Commissioner for Patents
United States Patent and Trademark Office
Washington, D.C. 20231
www.uspto.gov

Scott A. McCollister
Fay, Sharpe, Fagan, Minnich & McKee, LLP
1100 Superior Avenue, Seventh Floor
Cleveland, Ohio 44114-2579

| | | |
|---|---|---|
| In re Application of | : | |
| SOULES, et al. | : | DECISION ON PETITION |
| Serial No.: 10/525,697 | : | |
| PCT No.: PCT/US03/27363 | : | UNDER 37 CFR 1.47(a) |
| Int. Filing Date: 29 August 2003 | : | |
| Priority Date: 30 August 2002 | : | |
| Atty Docket No.: GLOZ 2 00122 | : | |
| For: COATED LED WITH IMPROVED EFFICIENCY | : | |

This decision is in response to the "Petition to File Other Than All The Inventors Under 37 C.F.R §1.47(a)" filed 23 March 2006 in the United States Patent and Trademark Office (USPTO) to accept the application without the signature of joint inventor Chen-Lun Hsing Chen. Applicant has authorized charging of the $200.00 petition fee to deposit account number 06-0308.

## BACKGROUND

On 29 August 2003, applicant filed international application PCT/US03/27363 which claimed priority to a previous application filed 30 August 2002. Pursuant to 37 CFR 1.495, the thirty-month period for paying the basic national fee in the United States was set to expire at midnight on 30 February 2005.

On 22 February 2005, applicant filed a transmittal letter for entry into the national stage in the United States, which was accompanied by the requisite basic national fee as required by 35 U.S.C. 371(c)(1); a preliminary amendment and an Information Disclosure Statement.

On 19 September 2005, applicant was mailed a NOTIFICATION OF MISSING REQUIREMENTS UNDER 35 U.S.C. 371 (Form PCT/DO/EO/905) informing applicant of the need to provide an executed oath or declaration of the inventors, in compliance with 37 CFR 1.497(a) and (b), identifying the application by the International application number and international filing date. Applicant was given two months to respond and advised that this time period could be extended with a proper petition and payment of fees.

On 23 March 2006, applicant filed the present petition under 37 CFR 1.47(a) accompanied by a petition for a four-month extension of time. With payment of the four-month extension of time and certification under 37 CFR 1.8, applicant's present response is considered timely filed.

## DISCUSSION

A petition under 37 CFR 1.47(a) must be accompanied by (1) the fee under 37 CFR 1.17(g), (2) factual proof that the missing joint investor refuses to execute the application or cannot be reached after diligent effort, (3) a statement of the last known address of the missing inventor, and (4) an oath or declaration by each 37 CFR 1.47(a) applicant on his or her own behalf and on behalf of the non-signing joint inventor. Applicant has satisfied items 1 and 3.

As to item (2), as stated in the Manual of Patent Examination Procedure (MPEP), Section 409.03(d) Proof of Unavailability or Refusal, "Copies of documentary evidence such as internet searches, certified mail return receipts, cover letters of instructions, telegrams, that support a finding that the nonsigning inventor could not be found or reached should be made part of the statement. The steps taken to locate the whereabouts of the nonsigning inventor should be included in the statement of facts." The statement of facts from counsel does not satisfy this item. Mr. McCollister states that on two occasions the non-signing inventor was contacted by e-mail to execute the declaration. Applicant has not included copies of the e-mails in question nor proof of delivery. In addition, applicant has not included any information to indicate the e-mail address used to contact inventor Chen is a valid e-mail address. Lastly, Mr. McCollister does not detail whether he has firsthand knowledge of the e-mail attempts and whether these emails included attachments comprising a complete set of application papers for the inventor's review.

While the statement of facts indicates that the inventor requested communication by e-mail, a successful petition under 37 CFR 1.47 is more easily accomplished when a complete set of application papers is mailed to the last known address of the inventor and the subject inventor either refuses to execute the declaration or does not respond.

Regarding item (4), the filed declaration does not comply with 37 CFR 1.497 (a)-(b). Specifically, MPEP Section 201.03 states that:

An oath or declaration under 37 CFR 1.63 by each actual inventor must be presented. While each inventor need not execute the same oath or declaration, each oath or declaration executed by an inventor must contain a complete listing of all inventors so as to clearly indicate what each inventor believes to be the appropriate inventive entity. Where individual declarations are executed, they must be submitted as individual declarations rather than combined into one declaration.

The filed declaration contains two pages "3 of 5" and two pages "5 of 5." This suggests that either the filed declaration was compiled from numerous declarations or that the inventors only returned their signature pages. Either scenario renders the document non-compliant.

In light of the above, it is not possible to grant applicant's petition at this time.

## CONCLUSION

For the reasons stated above, applicant's petition under 37 CFR 1.47(a) is **DISMISSED**.

Any reconsideration on the merits of this petition must be filed within **TWO (2) MONTHS** from the mail date of this decision. Any reconsideration request should include a cover letter entitled "Renewed Petition Under 37 CFR 1.47(a)." No additional petition fee is required. Extensions of time may be obtained under 37 CFR 1.136(a).

Any further correspondence with respect to this matter should be directed to Mail Stop PCT, Commissioner for Patents, Office of PCT Legal Administration, P.O. Box 1450, Alexandria, Virginia 22313-1450, with the contents of the letter marked to the attention of the Office of PCT Legal Administration.

Derek A. Putonen
Attorney Advisor
Office of PCT Legal Administration
Tel: 571-272-3294
Fax: 571-273-0459

#8

UNITED STATES PATENT AND TRADEMARK OFFICE

Commissioner for Patents
United States Patent and Trademark Office
Washington, D.C. 20231
www.uspto.gov

25 SEP 2006

Scott A. McCollister
Fay, Sharpe, Fagan, Minnich & McKee, LLP
1100 Superior Avenue, Seventh Floor
Cleveland, Ohio 44114-2579

| | | |
|---|---|---|
| In re Application of | : | |
| SOULES, et al. | : | DECISION ON |
| Serial No.: 10/525,697 | : | |
| PCT No.: PCT/US03/27363 | : | RENEWED PETITION |
| Int. Filing Date: 29 August 2003 | : | |
| Priority Date: 30 August 2002 | : | UNDER 37 CFR 1.47(a) |
| Atty Docket No.: GLOZ 2 00122 | : | |
| For: COATED LED WITH IMPROVED EFFICIENCY | : | |

This decision is in response to the "Renewed Petition Under 37 C.F.R §1.47(a)" filed 08 September 2006 in the United States Patent and Trademark Office (USPTO) to accept the application without the signature of joint inventor Chen-Lun Hsing Chen.

## BACKGROUND

On 03 July 2006, applicant was mailed a decision dismissing applicant's petition under 37 CFR 1.47(a). Applicant was afforded two months to file any request for reconsideration and advised that this period could be extended pursuant to 37 CFR 1.136(a).

On 08 September 2006, applicant filed the present renewed petition. Applicant has certified that the renewed petition was deposited for mailing on 05 September 2006; Monday, 04 September 2006 being a federal holiday, the present renewed petition is considered timely filed.

## DISCUSSION

As detailed in the decision mailed 03 July 2006, a petition under 37 CFR 1.47(a) must be accompanied by (1) the fee under 37 CFR 1.17(g), (2) factual proof that the missing joint investor refuses to execute the application or cannot be reached after diligent effort, (3) a statement of the last known address of the missing inventor, and (4) an oath or declaration by each 37 CFR 1.47(a) applicant on his or her own behalf and on behalf of the non-signing joint inventor. Applicant previously satisfied items 1 and 3. With the present filing, applicant has satisfied item (2). Specifically, applicant's present exhibits confirm that a complete set of application papers was sent by e-mail to the e-mail address provided by Mr. Chen and that the e-mail address used is the correct e-mail address.

As to item (4), the field declaration does not comply with 37 CFR 1.497(a)(3) as the citizenship for Mr. Chen does not appear on the declaration.

## CONCLUSION

For the reasons stated above, applicant's petition under 37 CFR 1.47(a) is **DISMISSED**.

Any reconsideration on the merits of this petition must be filed within **TWO (2) MONTHS** from the mail date of this decision. Any reconsideration request should include a cover letter entitled "Renewed Petition Under 37 CFR 1.47(a)." No additional petition fee is required. Extensions of time may be obtained under 37 CFR 1.136(a).

Any further correspondence with respect to this matter should be directed to Mail Stop PCT, Commissioner for Patents, Office of PCT Legal Administration, P.O. Box 1450, Alexandria, Virginia 22313-1450, with the contents of the letter marked to the attention of the Office of PCT Legal Administration.

Derek A. Putonen
Attorney Advisor
Office of PCT Legal Administration
Tel: (571) 272-3294
Fax: (571) 273-0459

#10

UNITED STATES PATENT AND TRADEMARK OFFICE

Commissioner for Patents
United States Patent and Trademark Office
Washington, D.C. 20231
www.uspto.gov

18 JAN 2007

Scott A. McCollister
Fay, Sharpe, Fagan, Minnich & McKee, LLP
1100 Superior Avenue, Seventh Floor
Cleveland, Ohio 44114-2579

| | |
|---|---|
| In re Application of<br>SOULES, et al.<br>Serial No.: 10/525,697<br>PCT No.: PCT/US03/27363<br>Int. Filing Date: 29 August 2003<br>Priority Date: 30 August 2002<br>Atty Docket No.: GLOZ 2 00122<br>For: COATED LED WITH IMPROVED EFFICIENCY | DECISION ON<br><br>RENEWED PETITION<br><br>UNDER 37 CFR 1.47(a) |

This decision is in response to the "Renewed Petition Under 37 C.F.R §1.47(a)" filed 24 November 2006 in the United States Patent and Trademark Office (USPTO) to accept the application without the signature of joint inventor Chen-Lun Hsing Chen.

## BACKGROUND

On 25 September 2006, applicant was mailed a decision dismissing applicant's petition under 37 CFR 1.47(a). Applicant was afforded two months to file any request for reconsideration and advised that this period could be extended pursuant to 37 CFR 1.136(a).

On 24 November 2006, applicant filed the present renewed petition.

## DISCUSSION

As detailed in the decision mailed 25 September 2006, a petition under 37 CFR 1.47(a) must be accompanied by (1) the fee under 37 CFR 1.17(g), (2) factual proof that the missing joint investor refuses to execute the application or cannot be reached after diligent effort, (3) a statement of the last known address of the missing inventor, and (4) an oath or declaration by each 37 CFR 1.47(a) applicant on his or her own behalf and on behalf of the non-signing joint inventor. Applicant previously satisfied items 1, 2 and 3. With the present filing, applicant has satisfied item (4). Specifically, applicant's presently filed declaration complies with 37 CFR 1.497(a)-(b) as it lists the citizenship of all of the inventors. Therefore, it is proper to grant applicant's renewed petition at this time.

## CONCLUSION

For the reasons stated above, applicant's renewed petition under 37 CFR 1.47(a) is **GRANTED**.

The application has an international filing date of 29 August 2003 under 35 U.S.C. 363, and will be given a date of **24 November 2006** under 35 U.S.C. 371(c)(1), (c)(2) and (c)(4).

As provided in 37 CFR 1.47(c), a notice of the filing of this application will be forwarded to the non-signing inventors at their last known addresses of record. A notice of the filing of the application under 37 CFR 1.47(a) will be published in the Official Gazette.

This application is being returned to the DO/EO/US for processing in accordance with this decision.

Derek A. Putonen
Attorney Advisor
Office of PCT Legal Administration
Tel: (571) 272-3294
Fax: (571) 273-0459

UNITED STATES PATENT AND TRADEMARK OFFICE

Commissioner for Patents
United States Patent and Trademark Office
P.O. Box 1450
Alexandria, VA 22313-1450
www.uspto.gov

18 JAN 2007

Mr. Chen-Lun Hsing Chen
6F., No. 101-22,
Sec. 4, Chongsin Road
Sanchong City
Taipei County 241
TAIWAN

In re Application of
SOULES, et al.
Serial No.: 10/525,697
PCT No.: PCT/US03/27363
Int. Filing Date: 29 August 2003
Priority Date: 30 August 2002
Atty Docket No.: GLOZ 2 00122
For: COATED LED WITH IMPROVED EFFICIENCY

Dear Mr. Chen:

You are named as an inventor in the above identified United States patent application, filed under the provisions of 37 CFR 1.47(a) and 35 U.S.C. 116. Should a patent be granted, you will be designated as an inventor. As a named inventor, you are entitled to inspect any paper in the file wrapper of the application, order copies of all or any part thereof (at a prepaid cost per 37 CFR 1.19) or to make your position of record in the application. Alternately, you may arrange to do any of the preceding through a registered patent agent or attorney presenting written authorization from you. If you care to join in the application, the law firm of record (see below) would presumably assist you. Joining in the application would entail the filing of the appropriate oath or declaration by you pursuant to 37 CFR 1.63.

Derek A. Putonen
Attorney Advisor
Office of PCT Legal Administration
Tel: (571) 272-3294
Fax: (571) 273-0459

Scott A. McCollister
Fay, Sharpe, Fagan, Minnich & McKee, LLP
1100 Superior Avenue, Seventh Floor
Cleveland, Ohio 44114-2579
United States of America

20 OCT 2005

UNITED STATES PATENT AND TRADEMARK OFFICE

Commissioner for Patents
United States Patent and Trademark Office
P.O. Box 1450
Alexandria, VA 22313-1450
www.uspto.gov

Steven J. Hultquist
Intellectual Property/Technology Law
P.O. Box 14329
Research Triangle, NC 27709

| | | |
|---|---|---|
| In re Application of | : | |
| HONE, David | : | |
| U.S. Application No.: 10/525,702 | : | |
| PCT No.: PCT/US03/26200 | : | DECISION ON PETITION |
| Int. Filing Date: 20 August 2003 | : | UNDER 37 CFR 1.47(a) |
| Priority Date: 20 August 2002 | : | |
| Attorney Docket No.: 4115-178 | : | |
| For: RECOMBINANT DOUBLE-STRANDED RNA PHAGES AND USES THEREOF | : | |

This decision is in response to applicants' "Petition for Acceptance of Declaration and Power of Attorney Executed by Assignee on Behalf of a Non-Signing Inventor in U.S. Patent Application no. 10/525,702" which is being treated as a petition under 37 CFR 1.47(b) filed 04 October 2005 to accept the application without the signature of the sole inventor, David Hone. The $200 petition fee has been submitted.

## BACKGROUND

On 20 August 2003, applicants filed international application PCT/US03/26200 which claimed a priority date of 20 August 2002. Pursuant to 37 CFR 1.495, the thirty-month period for paying the basic national fee in the United States expired at midnight on 20 February 2005.

On 18 February 2005, applicants filed a transmittal letter for entry into the national stage in the United States, which accompanied by, inter alia: the requisite basic national fee as required by 35 U.S.C. 371(c)(1); a copy of the international application; and a preliminary amendment.

On 04 August 2005, the United Stated Designated/Elected Office mailed a Notification of Missing Requirements under 35 U.S.C. 371 (Form PCT/DO/EO/905) indicating that an oath or declaration in compliance with 37 CFR 1.497(a) and (b) must be filed. The notification set a two-month time limit in which to respond.

On 04 October 2005, applicant filed the present petition under 37 CFR 1.47(b).

## DISCUSSION

A petition under 37 CFR 1.47(b) must be accompanied by: (1) the requisite petition fee under 37 CFR 1.17; (2) factual proof that the inventor refuses to execute the application or cannot be reached after diligent effort; (3) a statement of the last known address of the nonsigning inventor; (4) an oath or declaration executed by the 37 CFR 1.47(b) applicant on behalf of and as agent for the nonsigning inventor; (5) proof of proprietary interest in the application; and, (6) a showing that such action is necessary to preserve the rights of the parties or to prevent irreparable damages. The 37 CFR 1.47(b) applicant has satisfied the requirements of items (1)and (4). However, items (2); (3); (5) and (6) have not been satisfied.

Regarding item (2) above, petitioner states that David Hone has refused to sign the application. Section 409.03(d) of the Manual of Patent Examining Procedure (M.P.E.P.), **Proof of Unavailability or Refusal**, states, in part:

> Where a refusal of the inventor to sign the application papers is alleged, the circumstances of the presentation of the application papers and of the refusal must be specified in a statement of facts by the person who presented the inventor with the application papers and/or to whom the refusal was made. Statements by a party not present when an oral refusal is made will not be accepted.
>
> Proof that a bona fide attempt was made to present a copy of the application papers (specification, including claims, drawings, and oath or declaration) to the nonsigning inventor for signature, but the inventor refused to accept delivery of the papers or expressly stated that the application papers should not be sent, may be sufficient. When there is an express oral refusal, that fact along with the time and place of the refusal must be stated in the statement of facts. When there is an express written refusal, a copy of the document evidencing that refusal must be made part of the statement of facts. The document may be redacted to remove material not related to the inventor's reasons for refusal.
>
> When it is concluded by the 37 CFR 1.47 applicant that a nonsigning inventor's conduct constitutes a refusal, all facts upon which that conclusion is based should be stated in the statement of facts in support of the petition or directly in the petition. If there is documentary evidence to support facts alleged in the petition or in any statement of facts, such evidence should be submitted. Whenever a nonsigning inventor gives a reason for refusing to sign the application oath or declaration, that reason should be stated in the petition.

Petitioner states that David Hone has refused to sign the application. A review of the present petition and the accompanying papers reveal that applicant has not satisfied

item (2) above, in that the applicant has not shown that a bona fide attempt was made to present the application papers, including the specification, claims, and drawings to David Hone. The Affidavit of Olga Stecyk-Aquino states that, "on March 18, 2005 and March 29, 2005, she forwarded a Declaration/Power of Attorney, Confirmation, and Assignment for execution to the nonsigning inventor and that no response was received." The mailing of the Declaration/Power of Attorney is not considered a complete copy of the application papers (specification, including claims, drawings, and oath and declaration). Additionally, under these circumstances, where the Office is being asked to accept the silence of the nonsigning inventor's as evidence of a refusal to sign, petitioner must provide some evidence that the application materials have been received by the nonsigning applicant. Further, it appears that the application papers were mailed to Mr. Hone's corporate address. In this situation, the application papers should be submitted to the inventor at his last known home address to insure receipt.

As stated above, where a refusal of the inventor to sign the application papers is alleged, a statement of facts is needed from a person having first hand knowledge of the facts that a complete copy of the application papers (specification, claims, and drawings) were sent to David Hone, and when such papers were sent. In addition, copies of documentary evidence such as a certified mail return receipt, cover letters of instruction, telegrams, etc., should be supplied with the declaration.

Regarding item (3) above, a clear statement of the last known address of the non-signing inventor has not been provided. In situations where an inventor does not execute the oath or declaration, the inventor's most recent home address must be given to enable the Office to communicate directly with the inventor as necessary. (See MPEP §605.03)

Concerning Item (5), section 409.03(f) of the M.P.E.P., **Proof of Proprietary Interest**, states, in part:

> When an application is deposited pursuant to 37 CFR 1.47(b), the 37 CFR 1.47(b) applicant must prove that, as of the date the application is deposited in the Patent and Trademark Office, (1) the invention has been assigned to the applicant, or (2) the inventor has agreed in writing to assign the invention to the applicant, or (3) the applicant otherwise has sufficient proprietary interest in the subject matter to justify the filing of the application.
>
> If the application assigned, a copy of the assignment (in the English Language) must be submitted. The assignment must clearly indicate that the invention described in the 37 CFR 1.47(b) application was assigned to the 37 CFR 1.47(b) applicant prior to the date the application is deposited in the Patent and Trademark Office. A statement under 37 CFR 3.73(b) by the assignee must also be submitted (see MPEP § 324) . . .
>
> When an inventor has agreed in writing to assign an invention described in an application deposited pursuant to 37 CFR 1.47(b), a

> copy of that agreement should be submitted. If an agreement to assign is dependent on certain specified conditions being met, it must be established by affidavit or declaration that those conditions have been met. A typical agreement to assign is an employment agreement where an employee (nonsigning inventor) agrees to assign to his or her employer (37 CFR 1.47(b) applicant) all inventions made during employment. When such an agreement is relied on, it must be established by the affidavit or declaration of a person having firsthand knowledge of the facts that the invention was made by the employee while employed by the 37 CFR 1.47(b) applicant.
>
> If the invention has not been assigned, or if there is no written agreement to assign, the 37 CFR 1.47(b) applicant must demonstrate that he or she otherwise has a sufficient proprietary interest in the matter.
>
> A proprietary interest obtained otherwise than by assignment or agreement to assign may be demonstrated by an appropriate legal memorandum to the effect that a court of competent jurisdiction (federal, state, or foreign) would by the weight of authority in that jurisdiction award title of the invention to the 37 CFR 1.47(b) applicant. The facts in support of any conclusion that a court would award title to the 37 CFR 1.47(b) applicant should be made of record by way of an affidavit or declaration of the person having firsthand knowledge of same. The legal memorandum should be prepared and signed by an attorney at law familiar with the law of the jurisdiction involved. A copy (in the English language) of a statute (if other than the United States statute) or a court decision (if other than a reported decision of a federal court or a decision reported in the United States Patents Quarterly) relied on to demonstrate a proprietary interest should be made of record.

Regarding item (5), petitioner has not demonstrated that applicant has a propriety interest in the invention. Petitioner provided a copy of the "University of Maryland Biotechnology Institute Intellectual Property Assignment and Confidential Information Agreement" executed by David Hone. However, the petition does not establish firsthand knowledge of the specific details surrounding the present invention of David Hone, including the specific relationship of the inventive activities of David Hone and his employment with University of Maryland Biotechnology Institute. As stated in section 409.03(f) of the M.P.E.P. when such an employment agreement is relied upon, it must be established by the affidavit or declaration of a person having firsthand knowledge of the facts that the invention was made by the employee while employed by the 37 CFR 1.47(b) applicant. An affidavit or declaration of a person having firsthand knowledge of the facts that the invention was made by the employee while employed has not been provided.

Regarding item (6), a showing that such action is necessary to preserve the rights of the parties or to prevent irreparable damages has not been provided.

## CONCLUSION

The petition under 37 CFR 1.47(b) is **DISMISSED** without prejudice.

If reconsideration on the merits of this petition is desired, a proper response must be filed within **TWO (2) MONTHS** from the mail date of this decision. Any reconsideration request should include a cover letter entitled "Renewed Petition Under 37 CFR 1.47(b)." No additional petition fee is required.

Any further correspondence with respect to this matter should be addressed to: Mail Stop PCT, Commissioner for Patents, Office of PCT Legal Administration, P.O. Box 1450, Alexandria, Virginia 22313-1450, with the contents of the letter marked to the attention of the Office of PCT Legal Administration.

Anthony Smith
Attorney-Advisor
Office of PCT Legal Administration
Tel: (571) 272-3298
Fax: (571) 273-0459

22 DEC 2005

UNITED STATES PATENT AND TRADEMARK OFFICE

#8

Commissioner for Patents
United States Patent and Trademark Office
P.O. Box 1450
Alexandria, VA 22313-1450
www.uspto.gov

Steven J. Hultquist
Intellectual Property/Technology Law
P.O. Box 14329
Research Triangle, NC 27709

| | |
|---|---|
| In re Application of<br>HONE, David<br>U.S. Application No.: 10/525,702<br>PCT No.: PCT/US03/26200<br>Int. Filing Date: 20 August 2003<br>Priority Date: 20 August 2002<br>Attorney Docket No.: 4115-178<br>For: RECOMBINANT DOUBLE-STRANDED RNA PHAGES AND USES THEREOF | DECISION ON PETITION UNDER 37 CFR 1.47(b) |

This decision is in response to applicant's "Submission of Declaration Executed By Applicant of December 20, 2005, and Corresponding Withdrawal of Petition under 37 CFR 1.47(b) in the U.S. Patent Application no. 10/525,702" filed 20 December 2005, which is being treated as a Renewed Petition under 37 CFR 1.47(b). In a decision dated 20 October 2005, applicant's petition under 37 CFR 1.47(b) to accept the application without the signature of inventor, David Hone, was dismissed without prejudice.

The petition for status under 37 CFR 1.47(a) is moot since the declaration filed 20 December 2005 with the present renewed petition was executed by the named inventor, the previous non-signing inventor, David Hone. The declaration filed 20 December 2005 is acceptable under 37 CFR 1.497.

For the reasons above, the renewed petition under 37 CFR 1.47(b) is **DISMISSED** as MOOT.

The application has an international filing date of 20 August 2003 under 35 U.S.C. 363 and a date of **20 December 2005** under 35 U.S.C. 371(c)(1),(c)(2) and (c)(4).

The application is being returned to the International Division for processing as the U.S. National Stage of the above-identified international application.

Anthony Smith

Anthony Smith
Attorney-Advisor
Office of PCT Legal Administration
Tel: (571) 272-3298
Fax: (571) 273-0459

## SPE RESPONSE FOR CERTIFICATE OF CORRECTION

Paper No.: _____

DATE : 11/17/08

TO SPE OF : ART UNIT 1648 Campell Bruce (Spe)

SUBJECT : Request for Certificate of Correction for Appl. No.: 10/525 702 Patent No.: 7407790

Please respond to this request for a certificate of correction within 7 days.

**FOR IFW FILES:**

Please review the requested changes/corrections as shown in the **COCIN** document(s) in the IFW application image. No new matter should be introduced, nor should the scope or meaning of the claims be changed.

Please complete the response (see below) and forward the completed response to scanning using document code **COCX**.

**FOR PAPER FILES:**

Please review the requested changes/corrections as shown in the attached certificate of correction. Please complete this form (see below) and forward it with the file to:

**Certificates of Correction Branch (CofC)**
**South Tower - 9A22**
**Palm Location 7580**

Certificates of Correction Branch
**703-308-9390 ext.** _____

**Thank You For Your Assistance**

**The request for issuing the above-identified correction(s) is hereby:**
Note your decision on the appropriate box.

- ☑ **Approved** — **All** changes apply.
- ☐ **Approved in Part** — Specify below which changes **do not** apply.
- ☐ **Denied** — State the reasons for denial below.

**Comments:** _____

SPE

1648
Art Unit

UNITED STATES PATENT AND TRADEMARK OFFICE

Commissioner for Patents
United States Patent and Trademark Office
P.O. Box 1450
Alexandria, VA 22313-1450
www.uspto.gov

VENABLE LLP
P.O. BOX 34385
WASHINGTON DC 20043-9998

COPY MAILED

AUG 0 8 2007

OFFICE OF PETITIONS

Applicant: Von der Kammer et al.
Appl. No.: 10/525,726
International Filing Date: August 26, 2003
Title: DIAGNOSTIC AND THERAPEUTIC USE OF FOAP-13 POLYNUCLEOTIDES AND POLYPEPTIDES FOR NEURODEGENERATIVE DISEASES
Attorney Docket No.: 2335.0060001/SRL/KPQ
Pub. No.: US 2006/0141459
Pub. Date: June 29, 2006

This is a decision on the request for a corrected patent application publication under 37 CFR 1.221(b), received on August 29, 2006, for the above-identified application.

The request is granted.

The corrected patent application publication will be published in due course, unless the patent issues before the application is republished.

Inquiries relating to this matter may be directed to Mark O. Polutta at (703) 272-7709.

Mark O. Polutta
Senior Legal Advisor
Office of Patent Legal Administration
Office of the Deputy Commissioner
for Patent Examination Policy

UNITED STATES PATENT AND TRADEMARK OFFICE

UNITED STATES DEPARTMENT OF COMMERCE
United States Patent and Trademark Office
Address: COMMISSIONER FOR PATENTS
P.O. Box 1450
Alexandria, Virginia 22313-1450
www.uspto.gov

| APPL NO. | FILING OR 371(c) DATE | ART UNIT | FIL FEE REC'D | ATTY.DOCKET NO | TOT CLMS | IND CLMS |
|---|---|---|---|---|---|---|
| 10/525,726 | 11/25/2005 | 1649 | 2230 | 37998-237386 | 19 | 9 |

**CONFIRMATION NO. 3700**

**CORRECTED FILING RECEIPT**

*OC000000025214051*

26694
VENABLE LLP
P.O. BOX 34385
WASHINGTON, DC 20043-9998

Date Mailed: 08/06/2007

Receipt is acknowledged of this nonprovisional patent application. The application will be taken up for examination in due course. Applicant will be notified as to the results of the examination. Any correspondence concerning the application must include the following identification information: the U.S. APPLICATION NUMBER, FILING DATE, NAME OF APPLICANT, and TITLE OF INVENTION. Fees transmitted by check or draft are subject to collection. Please verify the accuracy of the data presented on this receipt. **If an error is noted on this Filing Receipt, please write to the Office of Initial Patent Examination's Filing Receipt Corrections. Please provide a copy of this Filing Receipt with the changes noted thereon. If you received a "Notice to File Missing Parts" for this application, please submit any corrections to this Filing Receipt with your reply to the Notice. When the USPTO processes the reply to the Notice, the USPTO will generate another Filing Receipt incorporating the requested corrections (if appropriate).**

**Applicant(s)**

Heinz Von Der Kammer, Hamburg, GERMANY;
Johannes Pohlner, Hamburg, GERMANY;

**Power of Attorney:** The patent practitioners associated with Customer Number **26694**.

**Domestic Priority data as claimed by applicant**

This application is a 371 of PCT/EP03/09437 08/26/2003
which claims benefit of 60/406,303 08/28/2002

**Foreign Applications**

EUROPEAN PATENT OFFICE (EPO) 02019281.1 08/28/2002

**If Required, Foreign Filing License Granted:** 08/06/2007

**The country code and number of your priority application, to be used for filing abroad under the Paris Convention, is US10/525,726**

**Projected Publication Date:** Not Applicable

**Non-Publication Request:** No

**Early Publication Request:** No

**Title**

Diagnostic and therapeutic use of foap-13 polynucleotides and polypeptides for neurodegenerative diseases

**Preliminary Class**

435

## PROTECTING YOUR INVENTION OUTSIDE THE UNITED STATES

Since the rights granted by a U.S. patent extend only throughout the territory of the United States and have no effect in a foreign country, an inventor who wishes patent protection in another country must apply for a patent in a specific country or in regional patent offices. Applicants may wish to consider the filing of an international application under the Patent Cooperation Treaty (PCT). An international (PCT) application generally has the same effect as a regular national patent application in each PCT-member country. The PCT process **simplifies** the filing of patent applications on the same invention in member countries, but **does not result** in a grant of "an international patent" and does not eliminate the need of applicants to file additional documents and fees in countries where patent protection is desired.

Almost every country has its own patent law, and a person desiring a patent in a particular country must make an application for patent in that country in accordance with its particular laws. Since the laws of many countries differ in various respects from the patent law of the United States, applicants are advised to seek guidance from specific foreign countries to ensure that patent rights are not lost prematurely.

Applicants also are advised that in the case of inventions made in the United States, the Director of the USPTO must issue a license before applicants can apply for a patent in a foreign country. The filing of a U.S. patent application serves as a request for a foreign filing license. The application's filing receipt contains further information and guidance as to the status of applicant's license for foreign filing.

Applicants may wish to consult the USPTO booklet, "General Information Concerning Patents" (specifically, the section entitled "Treaties and Foreign Patents") for more information on timeframes and deadlines for filing foreign patent applications. The guide is available either by contacting the USPTO Contact Center at 800-786-9199, or it can be viewed on the USPTO website at http://www.uspto.gov/web/offices/pac/doc/general/index.html.

For information on preventing theft of your intellectual property (patents, trademarks and copyrights), you may wish to consult the U.S. Government website, http://www.stopfakes.gov. Part of a Department of Commerce initiative, this website includes self-help "toolkits" giving innovators guidance on how to protect intellectual property in specific countries such as China, Korea and Mexico. For questions regarding patent enforcement issues, applicants may call the U.S. Government hotline at 1-866-999-HALT (1-866-999-4158).

---

## LICENSE FOR FOREIGN FILING UNDER
## Title 35, United States Code, Section 184
## Title 37, Code of Federal Regulations, 5.11 & 5.15

**GRANTED**

The applicant has been granted a license under 35 U.S.C. 184, if the phrase "IF REQUIRED, FOREIGN FILING LICENSE GRANTED" followed by a date appears on this form. Such licenses are issued in all applications where the conditions for issuance of a license have been met, regardless of whether or not a license may be required as set forth in 37 CFR 5.15. The scope and limitations of this license are set forth in 37 CFR 5.15(a) unless an earlier license has been issued under 37 CFR 5.15(b). The license is subject to revocation upon written notification. The date indicated is the effective date of the license, unless an earlier license of similar scope has been granted

under 37 CFR 5.13 or 5.14.

This license is to be retained by the licensee and may be used at any time on or after the effective date thereof unless it is revoked. This license is automatically transferred to any related applications(s) filed under 37 CFR 1.53(d). This license is not retroactive.

The grant of a license does not in any way lessen the responsibility of a licensee for the security of the subject matter as imposed by any Government contract or the provisions of existing laws relating to espionage and the national security or the export of technical data. Licensees should apprise themselves of current regulations especially with respect to certain countries, of other agencies, particularly the Office of Defense Trade Controls, Department of State (with respect to Arms, Munitions and Implements of War (22 CFR 121-128)); the Bureau of Industry and Security, Department of Commerce (15 CFR parts 730-774); the Office of Foreign Assets Control, Department of Treasury (31 CFR Parts 500+) and the Department of Energy.

**NOT GRANTED**

No license under 35 U.S.C. 184 has been granted at this time, if the phrase "IF REQUIRED, FOREIGN FILING LICENSE GRANTED" DOES NOT appear on this form. Applicant may still petition for a license under 37 CFR 5.12, if a license is desired before the expiration of 6 months from the filing date of the application. If 6 months has lapsed from the filing date of this application and the licensee has not received any indication of a secrecy order under 35 U.S.C. 181, the licensee may foreign file the application pursuant to 37 CFR 5.15(b).

#6

UNITED STATES PATENT AND TRADEMARK OFFICE

Commissioner for Patents
United States Patent and Trademark Office
P.O. Box 1450
Alexandria, VA 22313-1450
www.uspto.gov

23 JAN 2006

FOLEY AND LARDNER LLP
SUITE 500
3000 K STREET NW
WASHINGTON DC 20007

| | |
|---|---|
| In re Application of<br>ELLIOTT et al.<br>Application No.: 10/525,743<br>PCT No.: PCT/US03/26988<br>Int. Filing Date: 26 August 2003<br>Priority Date: 30 August 2002<br>Attorney Docket No.: 059314-0701<br>For: IMMUNE RESPONSE ASSOCIATED PROTEINS | DECISION ON REQUEST<br><br>UNDER 37 CFR 1.497(d) |

This is a decision on applicants' Petition entitled "Change of Inventorship in Accordance with 37 CFR 1.497(d)", filed on 27 September 2005 in the United States Patent and Trademark Office (USPTO). Petitioner seeks to delete all inventors except Vicki S. Elliott as inventors in the above referenced application.

## BACKGROUND

On 28 February 2005, applicant filed a Transmittal Letter requesting entry into the national stage in the United States of America under 35 U.S.C. § 371 with, *inter alia*, the requisite basic national fee.

On 11 August 2005, a Notification of Missing Requirements was mailed to applicant indicating that an oath or declaration, in compliance with 37 CFR 1.497(a) & (b), was required.

On 27 September 2005, applicant filed a petition under 37 CFR 1.497(d) for correction of inventorship, to delete all inventors except Vicki S. Elliott. In addition to the $130 petition fee, Petitioner provided the statements of inventors Thomas W. Richardson, Anita Swarnakar, Joseph P. Marquis, Shanya D. Becha, Soo Yeun Lee, Narinder K. Chawla, Jayalaxmi Ramkumar, April J.A. Hafalia, and Reena Khare in support of the correction of inventorship under 37 CFR 1.497(d). A declaration executed by sole inventor Vicki S. Elliott was also provided.

## DISCUSSION

Where the oath or declaration filed pursuant to 35 U.S.C. 371(c)(4) and 37 CFR 1.497(d) names an inventive entity different from the inventive entity set forth in the international application, the oath or declaration must be accompanied by: (1) a statement from each person being added or deleted as an inventor that any error in inventorship occurred without deceptive intention on his or her part; (2) the fee set forth in § 1.17(I); and (3) if an assignment has been executed by any of the original named inventors, the written consent of the assignee(s).

37 CFR 1.497(d) states, in part:

> (d) If the oath or declaration filed pursuant to 35 U.S.C. 371(c)(4) and this section names an inventive entity different from the inventive entity set

forth in the international application, the oath or declaration must be accompanied by:

(1) A statement from each person being added as an inventor . . . that any error in inventorship in the international application occurred without deceptive intention on his or her part;

(2) The processing fee set forth in § 1.17(I); and

(3) If an assignment has been executed by any of the original named inventors, the written consent of the assignees.

The processing fee of $130.00 has been paid, satisfying Item (2) above.

With regard to Item (3), there is no indication that an Assignment of Patent Application by the inventors has occurred. Thus, Item (3) above is not applicable.

With respect to Item (1) above, the published International application named Vicki S. Elliott, Erika A. Lindquist, Thomas W. Richardson, Anita Swarnakar, Joseph P. Marquis, Shanya D. Becha, Soo Yeun Lee, Narinder K. Chawla, Jayalaxmi Ramkumar, April J.A. Hafalia, and Reena Khare as inventors Applicants provided statements signed by Thomas W. Richardson, Anita Swarnakar, Joseph P. Marquis, Shanya D. Becha, Soo Yeun Lee, Narinder K. Chawla, Jayalaxmi Ramkumar, April J.A. Hafalia, Reena Khare as joint inventors. Each of these respective inventors stated: "I am being deleted as an inventor from the above-captioned application due to amendment of the application upon entry to the U.S. National Stage under 35 U.S.C. 371. Therefore, the change in the inventive entity from the International Application to the U.S. National Stage application occurred without deceptive intention". This statement satisfies item (1) of 37 CFR 1.497(d) with respective to these inventors.

The published International application named Vicki S. Elliott and Erika A. Lindquist as co-inventors. The petition was accompanied by a declaration executed by Ms. Elliott. However, the petition was not accompanied by a statement from Erika A. Lindquist requesting deletion of her inventorship. Moreover, there is no communication from the International Bureau (that is, Form IB/306) indicating that Ms. Lindquist was removed as an applicant/inventor under PCT Rule 92*bis* during the international phase.

Accordingly, applicant has met all of the requirements to remove Thomas W. Richardson, Anita Swarnakar, Joseph P. Marquis, Shanya D. Becha, Soo Yeun Lee, Narinder K. Chawla, Jayalaxmi Ramkumar, April J.A. Hafalia, and Reena Khare as co-inventors in the above-identified international application. However, Ms. Lindquist remains an inventor for the above referenced application and therefore, a declaration or oath, in compliance with 37 CFR 1.497(a) and (b) is required to fulfill the requirements of 35 U.S.C. 371(c). In the alternative, a renewed petition is necessary, providing either the Form IB/306 noting the removal of Ms. Lindquist as an inventor or a statement of Ms. Lindquist requesting her deletion as an inventor.

## CONCLUSION

For the reasons discussed above, the submission under 37 CFR 1.497(d) to all inventors except Vicki S. Elliott is **DISMISSED WITHOUT PREJUDICE**.

Any reconsideration on the merits of the petition under 37 CFR §1.497(d) must be filed within TWO (2) MONTHS from the mail date of this decision. Any reconsideration request should include a cover letter entitled "Renewed Petition Under 37 CFR §1.497(d)." No petition

fee is required. Any further extensions of time available may be obtained under 37 CFR 1.136(a).

The renewed petition should provide either: a copy of the Form IB/306 regarding the International Bureau's removal of Ms. Lindquist as an inventor or the appropriate statement from Ms. Lindquist requesting her deletion as a named inventor. In the alternative, a declaration or oath, in compliance with 37 CFR 1.497(a) and (b), and executed by applicant/inventor Erika A. Lindquist, is required.

Any further correspondence with respect to this matter should be addressed to the Mail Stop PCT, Commissioner for Patents, Office of PCT Legal Administration, P.O. Box 1450, Alexandria, Virginia 22313-1450, with the contents of the letter marked to the attention of the Office of PCT Legal Administration.

Cynthia M. Kratz

Cynthia M. Kratz
Attorney Advisor
PCT Legal Office
Office of PCT Legal Administration.

Telephone: (571)272-3286
Facsimile: (571)273-0459

21 APR 2006

#7

UNITED STATES PATENT AND TRADEMARK OFFICE

Commissioner for Patents
United States Patent and Trademark Office
P.O. Box 1450
Alexandria, VA 22313-1450
www.uspto.gov

FOLEY AND LARDNER LLP
SUITE 500
3000 K STREET NW
WASHINGTON DC 20007

| | |
|---|---|
| In re Application of<br>ELLIOTT<br>Application No.: 10/525,743<br>PCT No.: PCT/US03/26988<br>Int. Filing Date: 26 August 2003<br>Priority Date: 30 August 2002<br>Attorney Docket No.: 059314-0701<br>For: IMMUNE RESPONSE ASSOCIATED PROTEINS | DECISION ON<br>RENEWED PETITION<br>UNDER 37 CFR 1.497(d) |

This is a decision on applicants' "Renewed Petition under 37 CFR 1.497(d)", filed on 26 March 2006 in the United States Patent and Trademark Office (USPTO). Petitioner seeks to delete all inventors except Vicki S. Elliott as inventors in the above referenced application.

## BACKGROUND

On 27 September 2005, applicant filed a petition under 37 CFR 1.497(d) for correction of inventorship, to delete all inventors except Vicki S. Elliott. In addition to the $130 petition fee, Petitioner provided the statements of inventors Thomas W. Richardson, Anita Swarnakar, Joseph P. Marquis, Shanya D. Becha, Soo Yeun Lee, Narinder K. Chawla, Jayalaxmi Ramkumar, April J.A. Hafalia, and Reena Khare in support of the correction of inventorship under 37 CFR 1.497(d). A declaration executed by sole inventor Vicki S. Elliott was also provided.

On 23 January 2006, a decision dismissing the petition was mailed to applicant indicating that Ms. Lindquist remained an inventor for the above referenced application and therefore, a declaration or oath, in compliance with 37 CFR 1.497(a) and (b) was required to fulfill the requirements of 35 U.S.C. 371(c). In the alternative, a renewed petition was necessary, providing either the Form IB/306 noting the removal of Ms. Lindquist as an inventor or a statement of Ms. Lindquist requesting her deletion as an inventor.

On 23 March 2006, applicant filed a renewed petition along with a statement from Erika Lindquist regarding inventorship.

## DISCUSSION

Where the oath or declaration filed pursuant to 35 U.S.C. 371(c)(4) and 37 CFR 1.497(d) names an inventive entity different from the inventive entity set forth in the international application, the oath or declaration must be accompanied by: (1) a statement from each person being added or deleted as an inventor that any error in inventorship occurred without deceptive intention on his or her part; (2) the fee set forth in § 1.17(I); and (3) if an assignment has been executed by any of the original named inventors, the written consent of the assignee(s).

Applicant has now satisfied Items (1) and (2). Item (3) is not applicable. The renewed petition was accompanied by a statement from Erika A. Lindquist requesting deletion of her inventorship.

Accordingly, applicant has now met all of the requirements to remove Thomas W. Richardson, Anita Swarnakar, Joseph P. Marquis, Shanya D. Becha, Soo Yeun Lee, Narinder K. Chawla, Jayalaxmi Ramkumar, April J.A. Hafalia, Reena Khare and Erika A. Lindquist as co-inventors in the above-identified international application.

## CONCLUSION

For the reasons discussed above, the submission under 37 CFR 1.497(d) to all inventors except Vicki S. Elliott is **GRANTED**.

The declaration, on 27 September 2005, is acceptable and in compliance with 37 CFR 1.497(a) and (b).

The application will be forwarded to the United States Designated/Elected Office for further processing. The 35 U.S.C. 371(c)(1), (c)(2) and (c)(4) date is **27 September 2005.**

Cynthia M. Kratz

Cynthia M. Kratz
Attorney Advisor
PCT Legal Office
Office of PCT Legal Administration.

Telephone: (571)272-3286
Facsimile: (571)273-0459

OK TO ENTER: /T.L./ 9/24/08

# UNITED STATES PATENT AND TRADEMARK OFFICE

# CERTIFICATE OF CORRECTION

PATENT NO. 7,283,929 B2 Page 1 of 1

APPLICATION NO.: 10/525,754

ISSUE DATE: October 16, 2007

INVENTORS: Fujiyama et al.

It is hereby certified that an error or errors appear in the above-identified patent and that said Letters Patent is hereby corrected as shown below:

Title page, item (22), change "Filed: Sep. 26, 2005" to --PCT Filed: Aug. 29, 2003--.

Title page, column 1, below item (22), insert the following:

--(86) PCT No.: PCT/JP2003/011102

§371(c)(1),

(2), (4) Date: Sep. 26, 2005

(87) PCT Pub. No.: WO2004/021097

PCT Pub. Date: Mar. 11, 2004--

MAILING ADDRESS OF SENDER

Finnegan, Henderson, Farabow,
Garrett & Dunner, L.L.P.
901 New York Avenue, N.W.
Washington, D.C. 20001-4413

DEC 3 2007

## SPE RESPONSE FOR CERTIFICATE OF CORRECTION

Paper No.: ____

DATE : 3/4/08

TO SPE OF : ART UNIT 2863

SUBJECT : Request for Certificate of Correction for Appl. No.: 10/525754 Patent No: 7283929 B2

A response is requested with respect to a request for a certificate of correction.

With respect to the change(s) requested to correct Office and/or Applicant's errors, should the patent read as shown in the certificate of correction attached herewith or the COCIN document(s), in IFW images for the above-identified patented application? No new matter should be introduced, nor should the scope or meaning of the claims be changed.

If the response is for an IFW, within 7 days, please complete and forward the response, to the employee (named below) via scanning into application images, using document code COCX.

If the response is for a paper file wrapper, please complete the response and forward the response with the paper file wrapper, to the employee (named below), within 7 days, to:

**Certificates of Correction Branch (CofC)**
**South Tower - 9A22**
**Palm Location 7580**

*VIRGINIA TOLBERT*
**Certificates of Correction Branch**
**703-308-9390 ext. 113**

**Thank You For Your Assistance**

**The request for issuing the above-identified correction(s) is hereby:**
Note your decision on the appropriate box.

- ☒ **Approved** — All changes apply.
- ☐ **Approved in Part** — Specify below which changes do not apply.
- ☐ **Denied** — State the reasons for denial below.

**Comments:** _____

/Tung S Lau/ (Acting SPE)
**SPE**

2863
**Art Unit**

15 SEP 2005

UNITED STATES PATENT AND TRADEMARK OFFICE

Commissioner for Patents
United States Patent and Trademark Office
P.O. Box 1450
Alexandria, VA 22313-1450
www.uspto.gov

Albihns Stockholm AB
Box 5581, Linnegatan 2
SE-114 85 Stockholm
SWEDEN

| | | |
|---|---|---|
| In re Application of | : | |
| Belin et al. | : | |
| Serial No.: 10/525,769 | : | DECISION |
| PCT No.: PCT/SE02/01594 | : | |
| Int. Filing Date: 05 September 2002 | : | |
| Attorney's Docket No.: 68641-78656 | : | |
| For: TECHNOLOGY INDEPENDENT | : | |
| INFORMATION MANAGEMENT | : | |

This application comes before the PCT Legal Office for matters arising under 35 U.S.C. 371. No petition fee is due.

## BACKGROUND

On 05 September 2002, applicants filed international application PCT/SE02/01594, which claimed priority of an earlier U.S. provisional application filed 05 September 2001. Prior to the expiration of thirty months from the earliest priority date, applicant withdrew his priority claim to the provisional application. A copy of the international application was communicated to the United States Patent and Trademark Office from the International Bureau on 13 March 2003. Accordingly, the thirty-month period for paying the basic national fee for the national stage in the United States expired at midnight on 05 March 2005.

On 28 February 2005, applicants filed a transmittal letter for entry into the national stage in the United States which was accompanied by, *inter alia*, a preliminary amendment, the combined declaration and power of attorney, and authorization to charge the deposit account for the basic national fee. These papers were assigned Application No. 10/525,769.

On 27 July 2005, a "NOTIFICATION OF ABANDONMENT" (form PCT/DO/EO/909) was mailed to applicant indicating that the application had become abandoned for failure to pay the full U.S. Basic National Fee by 30 months.

## DISCUSSION

Upon review of the file contents, it was noted that the priority claim was properly withdrawn before thirty months from the earliest claimed priority date. Applicant has provided a copy of the "NOTIFICATION OF WITHDRAWAL OF PRIORITY CLAIM" (form PCT/IB/317) which indicates that the priority claim was withdrawn in a timely fashion. Therefore, the "NOTIFICATION OF ABANDONMENT" was sent out in error.

## CONCLUSION

The "NOTIFICATION OF ABANDONMENT" (form PCT/DO/EO/909) mailed on 27 July 2005 is hereby **VACATED**.

This application is being forwarded to the national stage processing division for processing in accordance with this decision.

Debra Brittingham
PCT Special Programs Examiner
Office of PCT Legal Administration

Tel: (571) 272-3280
Fax: (571) 273-0459

Boris Milef
PCT Legal Examiner
Office of PCT Legal Administration

UNITED STATES PATENT AND TRADEMARK OFFICE

Commissioner for Patents
United States Patent and Trademark Office
P.O. Box 1450
Alexandria, VA 22313-1450
www.uspto.gov

**ALBIHNS STOCKHOLM AB**
**BOX 5581, LINNEGATAN 2**
**SE-114 85 STOCKHOLM; SWEDENn**
**STOCKHOLM SE SWEDEN**

**COPY MAILED**

OCT 18 2006

**OFFICE OF PETITIONS**

| | | |
|---|---|---|
| In re Application of | : | |
| **BELIN**, et al. | : | |
| Application No. 10/525,769 | : | DECISION ON PETITION |
| Filed: February 28, 2005 | : | TO WITHDRAW |
| Attorney Docket No. 68641-78656 | : | FROM RECORD |
| | : | |

This is a decision on the Request to Withdraw as attorney or agent of record under 37 C.F.R. § 1.36(b), filed June 29, 2006.

The request is **NOT APPROVED**.

A grantable request to withdraw as attorney/agent of record must be signed by every attorney/agent seeking to withdraw or contain a clear indication that one attorney is signing on behalf of another/others. A request to withdraw will not be approved unless at least 30 (thirty) days would remain between the date of approval and the later of the expiration date of a time to file a response or the expiration date of the maximum time period which can be extended under 37 C.F.R. § 1.136(a).

The request to withdraw less than all attorneys appointed by customer number 26288 cannot be approved. The addition and/or deletion of a practitioner from the list of practitioners associated with a Customer Number should be made by submitting a "Request for Customer Number Data Change" (PTO/SB/124) which will result in the addition or deletion of such practitioner from the list of persons authorized to represent any applicant or assignee of the entire interest who appointed all of the practitioners associated with such Customer Number. See MPEP 403 Section I. Customer Number Practice. The correspondence address of record remains unchanged.

Telephone inquiries concerning this decision should be directed to Monica A. Graves at 571-272-7253.

David Bucci
Petitions Examiner
Office of Petitions

UNITED STATES PATENT AND TRADEMARK OFFICE

COMMISSIONER FOR PATENTS
UNITED STATES PATENT AND TRADEMARK OFFICE
P.O. BOX 1450
ALEXANDRIA, VA 22313-1450
WWW.USPTO.GOV

Paper No.

COPY MAILED

JUN 09 2008

NATH & ASSOCIATES
112 South West Street
Alexandria VA 22314

| | | |
|---|---|---|
| In re Application of | : | |
| Hamutal Meiri et al. | : | |
| Application No. 10/525,776 | : | DECISION ON PETITION |
| Filed: May 18, 2005 | : | PURSUANT TO |
| Attorney Docket No.: 26640U | : | 37 C.F.R. § 1.181 |
| Title: METHOD OF DIAGNOSIS OF | : | |
| PREGNANCY-RELATED COMPLICATIONS | : | |

This is a decision on the petition filed on January 15, 2008, pursuant to 37 C.F.R. § 1.181, requesting that the holding of abandonment in the above-identified application be withdrawn.

## BACKGROUND

The above-identified application became abandoned for failure to file a proper response to the Restriction Requirement, mailed June 25, 2007[1], which set a shortened statutory period to reply for one month. No extensions of time under the provisions of 37 C.F.R. § 1.136(a) were received. Accordingly, the above-identified application became abandoned on July 26, 2007. A Notice of abandonment was mailed on January 10, 2008.

## RELEVANT PORTION OF THE MPEP

Section 503 of the MPEP, entitled Application Number and Filing Receipt, sets forth, *in pertinent part*:

RETURN POSTCARD

1 It is noted that the Office mailed a Restriction Requirement on May 16, 2007. However, the Restriction Requirement of June 25, 2007 expressly vacated the previous mailing and reset the period for response.

If a receipt of any item (e.g., paper or fee) filed in the USPTO is desired, it may be obtained by enclosing with the paper a self-addressed postcard specifically identifying the item. The USPTO will stamp the receipt date on the postcard and place it in the outgoing mail. A postcard receipt which itemizes and properly identifies the items which are being filed serves as prima facie evidence of receipt in the USPTO of all the items listed thereon on the date stamped thereon by the USPTO.

The identifying data on the postcard should be so complete as to clearly identify the item for which receipt is requested. For example, the postcard should identify the applicant's name, application number (if known), confirmation number (if known), filing date, interference number, title of the invention, etc. The postcard should also identify the type of paper being filed, e.g., new application, affidavit, amendment, notice of appeal, appeal brief, drawings, fees, motions, supplemental oath or declaration, petition, etc., and the number of pages being submitted. If a new application is being filed, all parts of the application being submitted should be separately listed on the postcard, e.g., the number of pages of specification (including written description, claims and abstract), number of claims, number of sheets of drawings, number of pages of oath/declaration, number of pages of cover sheet (provisional application).

The postcard receipt will not serve as prima facie evidence of receipt of any item which is not adequately itemized on the postcard. For example, merely listing on the postcard "a complete application" or "patent application" will not serve as a proper receipt for each of the required components of an application (e.g., specification (including claims), drawings (if necessary), oath or declaration and the application filing fee) or missing portions (e.g., pages, sheets of drawings) of an application if one of the components or portion of a component is found to be missing by the USPTO. Each separate component should be specifically and properly itemized on the postcard. Furthermore, merely incorporating by reference in the postcard receipt, the items listed in a transmittal letter will not serve as prima facie evidence of receipt of those items.

The person receiving the item(s) in the USPTO will check the listing on the postcard against the item(s) being filed to be sure they are properly identified and that all the items listed on the postcard are presently being submitted to the USPTO. If any of the items listed on the postcard are not being submitted to the USPTO, those items will be crossed off and the postcard initialed by the person receiving the items.

Upon return of a postcard receipt from the USPTO, the postcard receipt should be promptly reviewed by the person who filed the items to ensure that every item specifically denoted on the postcard was received by the USPTO. If the postcard receipt has been annotated to indicate that a particular item denoted on the postcard was not received by the USPTO, the postcard receipt will not serve as prima facie evidence of receipt of that item in the USPTO.

## ANALYSIS

With this petition, Petitioner has asserted that a response to the restriction requirement was submitted to the Office on July 11, 2007.

Petitioner has submitted a copy of this submission, along with a postcard receipt that evinces that a "Response to Restriction Requirement, three (3) pages" was received in the Office of Initial Patent Examination (OIPE) on July 11, 2007.

Petitioner has requested that the holding of abandonment in the above-identified application be withdrawn. It is clear that a response was timely submitted. Considering the facts and circumstances of the delay at issue, as set forth on petition, it is concluded that Petitioner has met his burden of establishing that a submission was timely submitted.

Accordingly, the petition under 37 C.F.R. § 1.181(a) is **GRANTED**. The holding of abandonment is **WITHDRAWN**.

The Technology Center will be notified of this decision. The Technology Center's support staff will notify the Examiner of this decision, so that the Response to the Restriction Requirement what was submitted with this petition (originally received by the Office on July 11, 2007) can be processed.

Telephone inquiries regarding *this decision* should be directed to the undersigned at (571) 272-3225[2]. All other inquiries concerning examination procedures or status of the application should be directed to the Technology Center.

/Paul Shanoski/
Paul Shanoski
Senior Attorney
Office of Petitions

---

2 Petitioner will note that all practice before the Office should be in writing, and the action of the Office will be based exclusively on the written record in the Office. See 37 C.F.R. § 1.2. As such, Petitioner is reminded that no telephone discussion may be controlling or considered authority for Petitioner's further action(s).

UNITED STATES PATENT AND TRADEMARK OFFICE

UNITED STATES DEPARTMENT OF COMMERCE
United States Patent and Trademark Office
Address: COMMISSIONER FOR PATENTS
P.O. Box 1450
Alexandria, Virginia 22313-1450
www.uspto.gov

WEINGARTEN, SCHURGIN, GAGNEBIN & LEBOVICI LLP
TEN POST OFFICE SQUARE
BOSTON, MA 02109

Mail Date: 05/03/2010

| | | |
|---|---|---|
| **Applicant** | : Hermann Bujard | : DECISION ON REQUEST FOR |
| **Patent Number** | : 7666668 | : RECALCULATION of PATENT |
| **Issue Date** | : 02/23/2010 | : TERM ADJUSTMENT IN VIEW |
| **Application No** | : 10/525,785 | : OF WYETH AND NOTICE OF INTENT TO |
| **Filed** | : 09/14/2005 | : ISSUE CERTIFICATE OF CORRECTION |
| | | : |

The Request for Recalculation is **GRANTED** to the extent indicated.

The patent term adjustment has been determined to be **1067** days. The USPTO will *sua sponte* issue a certificate of correction reflecting the amount of PTA days determined by the recalculation.

Prior to the issuance of the certificate of correction, the USPTO will afford patentee an opportunity to be heard and request reconsideration. Accordingly, patentee has **one month or thirty (30) days**, whichever is longer, to file a request for reconsideration of this patent term adjustment calculation. See 35 U.S.C. 154(b)(3)(B)(ii) and 37 CFR 1.322(a)(4). No extensions of time will be granted under 37 CFR 1.136.

Patentee should use document code PET.OP if electronically filing a request for reconsideration of this patent term adjustment calculation. The patentee must also include the information required by 37 CFR 1.705(b)(2) and the fee required by 37 CFR 1.18(e). If patentee does not file a timely request for reconsideration of this patent term adjustment calculation including the information required by 37 CFR 1.705(b)(2) and the fee required by 37 CFR 1.18(e), the USPTO will issue a certificate of correction reflecting the PTA determination noted above.

Patentee should be aware that in order to preserve the right to review in the United States District Court for the District of Columbia of the USPTO patent term adjustment determination, patentee must ensure that he or she also take the steps required under 35 U.S.C. 154(b)(4)(A) in a timely manner. Nothing in the request for recalculation should be construed as providing an alternative time frame for commencing a civil action under 35 U.S.C. 154(b)(4)(A).

Any questions concerning this decision should be directed to the Office of Patent Legal Administration at 571-272-7702.

UNITED STATES PATENT AND TRADEMARK OFFICE

Commissioner for Patents
United States Patent and Trademark Office
P.O. Box 1450
Alexandria, VA 22313-1450
www.uspto.gov

MAILED

MAY 18 2006

DIRECTOR'S OFFICE
TECHNOLOGY CENTER 2600

SNELL & WILMER L.L.P.
600 ANTON BOULEVARD
SUITE 1400
COSTA MESA CA 92626

In re Application of:
Tomoyuki Okada, et al.
Application No. 10/525,788
Filed: September 26, 2005
For: RECORDING MEDIUM, PLAYBACK DEVICE, PROGRAM, PLAYBACK METHOD, AND RECORDING METHOD

DECISION ON PETITION TO MAKE SPECIAL

This is a decision on the petition filed March 27, 2006 under MPEP §708.02,VIII requesting accelerated examination.

The petition under Manual of Patent Examination Procedure §708.02, VIII, must:
(1) be filed prior to receiving any examination by the examiner,
(2) be accompanied by the required fee- $130,
(3) the claims should be directed to a single invention (if it is determined that the claims pertain to more than one invention, then applicant will have to make an election without traverse or forfeit accelerated examination status),
(4) state that a pre-examination search was made, and fully discuss the search method employed, such as classes and subclasses searched, publications, Chemical abstracts, patents, etc. A search made by a foreign patent office satisfies this requirement,
(5) be accompanied by a copy of each of the references most closely related to the subject matter encompassed by the claims if said references are not already of record,
(6) fully discuss the references, pointing out with the particularity required by 37 C.F.R. §1.111(b) and (c), how the claimed subject matter is patentable over the references.

Applicant's submission is deficient in that it does not comply with items (4) and (6) above. In regard to item (4), it is noted that petitioner states that an international search has been made in the JPO for the foreign priority application. However, a search made by a foreign patent office only satisfies this requirement "if the claims in the corresponding foreign application are of the same or similar scope to the claims in the US application for which special status is requested". In the instant petition, there is no clear statement or indication that the claims of the instant application (e.g. new claims 48-71) are in fact the same or of similar scope to those of the corresponding foreign application. In regard to item (6), no clear indication is given specifically pointing out how the language of the claims patentably distinguishes from the references.

Accordingly, the petition is **DENIED**.

Should applicant desire reconsideration, he/she should supplement this petition by providing a statement which positively asserts that the claims of the instant application are in fact the same or of similar scope to those searched by the JPO and must comply with item (6) as outlined above. No further petition fee is required.

Any request for reconsideration must be filed within **TWO MONTHS** of the date of this decision.

Krista Zele
Special Program Examiner
Technology Center 2600
Communications

UNITED STATES PATENT AND TRADEMARK OFFICE

Commissioner for Patents
United States Patent and Trademark Office
P.O. Box 1450
Alexandria, VA 22313-1450
www.uspto.gov

MAIL

NOV 13 2006
DIRECTOR OFFICE
TECHNOLOGY CENTER 2600

SNELL & WILMER L.L.P.
600 ANTON BOULEVARD
SUITE 1400
COSTA MESA CA 92626

In re Application of:
Tomoyuki Okada, et al.
Application No. 10/525,788
Filed: September 26, 2005
For: RECORDING MEDIUM, PLAYBACK DEVICE, PROGRAM, PLAYBACK METHOD, AND RECORDING METHOD

DECISION ON PETITION TO MAKE SPECIAL

This is a decision on the petition filed March 27, 2006 and the revised petition filed July 18, 2006 under MPEP §708.02,VIII requesting accelerated examination.

The petition under Manual of Patent Examination Procedure §708.02, VIII, must:
(1) be filed prior to receiving any examination by the examiner,
(2) be accompanied by the required fee- $130,
(3) the claims should be directed to a single invention (if it is determined that the claims pertain to more than one invention, then applicant will have to make an election without traverse or forfeit accelerated examination status),
(4) state that a pre-examination search was made, and fully discuss the search method employed, such as classes and subclasses searched, publications, Chemical abstracts, patents, etc. A search made by a foreign patent office satisfies this requirement,
(5) be accompanied by a copy of each of the references most closely related to the subject matter encompassed by the claims if said references are not already of record,
(6) fully discuss the references, pointing out with the particularity required by 37 C.F.R. §1.111(b) and (c), how the claimed subject matter is patentable over the references.

The petitioner has now met all the above-listed requirements. Accordingly, the petition is **GRANTED**.

The application will retain its special status throughout its entire prosecution, including any appeal to the Board of Patent Appeals and Interferences, subject only to diligent prosecution by the applicant. The application file is being forwarded to the examiner for appropriate action in due course.

Krista Zele
Special Program Examiner
Technology Center 2600
Communications

UNITED STATES PATENT AND TRADEMARK OFFICE

Commissioner for Patents
United States Patent and Trademark Office
P.O. Box 1450
Alexandria, VA 22313-1450
www.uspto.gov

OCT 15 2008

Iver P. Cooper
BROWDY AND NEIMARK, P.L.L.C.
624 NINTH STREET, N.W.
WAHINGTON, D.C. 20001

| | |
|---|---|
| In re Application of | : |
| FRESKGARD et al | :Decision on Petition |
| Serial No.: 10/525,817 | : |
| Filed: September 15, 2005 | : |
| Attorney Docket No.: FRESKGARD=9 | : |

This letter is in response to the Petition filed on August 19, 2008 requesting the Office to Vacate holding of non-responsiveness; interview record and supplemental election with traverse.

**BACKGROUND AND DISCUSSION**

This application was filed as a national stage application under 35 USC 371 of PCT/DK03/00739 and as such, is eligible for unity of invention practice.

On May 9, 2007, the Examiner required a lack of unity between the Claims 1-251 into one of 3 groups, stating that the groups lacked a special technical feature in view of Fredriksson et al.

On September 10, 2007, Applicant elected Group I (Claims 1-187, 210, 224-251) directed to methods for obtaining a bifunctional complex and argued that Fredriksson does not teach the special technical feature. Applicant cancelled the claims of Group II (188-200 and 212), Applicants added new Claims 252-268 which referred to Claim 167 of Group I and stated that claims 252-268 should be joined to Group I.

On November 28, 2007, the Examiner stated the original restriction requirement inadvertently omitted an election of species requirement. The Examiner vacated the original lack of unity requirement directed to Groups I, II and III. The examiner then reiterated the lack of unity requirement with respect to the pending claims which were divided Groups I and II and added species election requirement. The Examiner requested applicants to select reactive groups including an amino acid, reactive groups including a carboxylic acid, reactive groups including a thio group, reactive groups including an

aldehyde, and reactive groups including a hydroxyl group. The Examiner then stated, species are independent or distinct because each different reactive group has a different chemical structure and functional properties. Next, the examiner requested election of a cleavable linker (see page 4).

On February 28, 2008, Applicants again elected Group I with traverse and elected with traverse "reactive groups including a hydroxyl group (Claim 66) and the cleavable linkers by electromagnetic radiation (Claim 77). The response then qualified the election to state that if this election is insufficient, applicants elect an o-nitrobenzyl linker.

On June 5, 2008, the Examiner mailed a notice regarding a non-responsive amendment stating that applicant had not elected a single species for examination because multiple different o-nitrobenzyl linkers are recited.

On August 12, 2008, the Examiner and Applicant had a telephonic interview to discuss the election of species requirement.

On August 19, 2008, Applicants filed this petition to request that the Office vacate holding of non-responsiveness; interview record and supplemental election with traverse.

**DISCUSSION**

The petition and file history have been carefully considered.

I. The Petition requests that the Office to vacate the holding of non-responsiveness

The Petition asserts that neither Office action required applicants to elect a particular species of reactive group or cleavable links, hence the prior response was fully responsive to the restriction requirement(s), as formulated.

Upon review of the file, the Office agrees.

II. Interview Summary

The Office acknowledges the request to ratify the interview summary and will forward the Petition to the examiner for consideration.

III. Supplemental Election

The Petition elects with traverse the first structure of Claim 77. The election will be forwarded to the Examiner for preparation of an Office action on the merits.

**DECISION**

The petition filed under is **GRANTED** for the reasons set forth above.

The holding of non-responsiveness mailed 5 June 2008 is hereby vacated.

**The application will be forwarded to the examiner for consideration and the preparation of a new Office action consistent with this decision which addresses Group I, and the elected species of the reactive structure including hydroxyl group and the first structure of Claim 77, wherein the ring bears R1, R3 and NO2 substituents.**

It is noted that the claim set includes generic claims. Upon the allowance of a generic claim, applicant will be entitled to consideration of claims to additional species which depend from or otherwise require all the limitations of an allowable generic claim as provided by 37 CFR 1.141.

Should there be any questions about this decision, please contact Special Program Examiner Julie Burke, by letter addressed to Director, Technology Center 1600, at the address listed above, or by telephone at 571-272-1600 or by facsimile sent to the general Office facsimile number, 571-273-8300.

George C. Elliott

George Elliott
Director, Technology Center 1600
jb/jg

UNITED STATES PATENT AND TRADEMARK OFFICE

UNITED STATES DEPARTMENT OF COMMERCE
United States Patent and Trademark Office
Address: COMMISSIONER FOR PATENTS
P.O. Box 1450
Alexandria, Virginia 22313-1450
www.uspto.gov

COMPUTER PATENT ANNUITIES INC.
901 N. WASHINGTON STREET
SUITE 305
ALEXANDRIA, VA 22314

Mail Date: 04/21/2010

| | | |
|---|---|---|
| **Applicant** | : Kai Fabian | : DECISION ON REQUEST FOR |
| **Patent Number** | : 7579484 | : RECALCULATION of PATENT |
| **Issue Date** | : 08/25/2009 | : TERM ADJUSTMENT IN VIEW |
| **Appliction No** | : 10/525,820 | : OF WYETH AND NOTICE OF INTENT TO |
| **Filed** | : 02/25/2005 | : ISSUE CERTIFICATE OF CORRECTION |
| | | : |

The Request for Recalculation is **GRANTED** to the extent indicated.

The patent term adjustment has been determined to be **480** days. The USPTO will *sua sponte* issue a certificate of correction reflecting the amount of PTA days determined by the recalculation.

Prior to the issuance of the certificate of correction, the USPTO will afford patentee an opportunity to be heard and request reconsideration. Accordingly, patentee has **one month or thirty (30) days**, whichever is longer, to file a request for reconsideration of this patent term adjustment calculation. See 35 U.S.C. 154(b)(3)(B)(ii) and 37 CFR 1.322(a)(4). No extensions of time will be granted under 37 CFR 1.136.

Patentee should use document code PET.OP if electronically filing a request for reconsideration of this patent term adjustment calculation. The patentee must also include the information required by 37 CFR 1.705(b)(2) and the fee required by 37 CFR 1.18(e). If patentee does not file a timely request for reconsideration of this patent term adjustment calculation including the information required by 37 CFR 1.705(b)(2) and the fee required by 37 CFR 1.18(e), the USPTO will issue a certificate of correction reflecting the PTA determination noted above.

Patentee should be aware that in order to preserve the right to review in the United States District Court for the District of Columbia of the USPTO patent term adjustment determination, patentee must ensure that he or she also take the steps required under 35 U.S.C. 154(b)(4)(A) in a timely manner. Nothing in the request for recalculation should be construed as providing an alternative time frame for commencing a civil action under 35 U.S.C. 154(b)(4)(A).

Any questions concerning this decision should be directed to the Office of Patent Legal Administration at 571-272-7702.

UNITED STATES PATENT AND TRADEMARK OFFICE

Commissioner for Patents
United States Patent and Trademark Office
P.O. Box 1450
Alexandria, VA 22313-1450
www.uspto.gov

OLIFF & BERRIDGE, PLC
P. O. BOX 19928
ALEXANDRIA, VA 22320

COPY MAILED

AUG 03 2007

OFFICE OF PETITIONS

In re Application of
Toshihiro Miyazaki
Application No. 10/525,828
Filed: February 25, 2005
Attorney Docket No. 122901

DECISION GRANTING PETITION
UNDER 37 CFR 1.313(c)(2)

This is a decision on the petition, filed August 2, 2007, under 37 CFR 1.313(c)(2) to withdraw the above-identified application from issue after payment of the issue fee.

The petition is **GRANTED**.

The above-identified application is withdrawn from issue for consideration of a submission under 37 CFR 1.114 (request for continued examination). See 37 CFR 1.313(c)(2).

***Petitioner is advised that the issue fee paid on June 14, 2007 in the above-identified application cannot be refunded. If, however, the above-identified application is again allowed, petitioner may request that it be applied towards the issue fee required by the new Notice of Allowance.***[1]

Telephone inquiries should be directed to the undersigned at (571) 272-3218.

This matter is being referred to Technology Center AU 2612 for processing of the request for continued examination under 37 CFR 1.114 and for consideration of the Information Disclosure Statement.

Frances Hicks
Petitions Examiner
Office of Petitions

C:\Documents and Settings\fhicks\My Documents\470\aug10\525828.wpd

---

[1] *The request to apply the issue fee to the new Notice may be satisfied by completing and returning the new Part B – Fee(s) Transmittal Form (along with any balance due at the time of submission). Petitioner is advised that the Issue Fee Transmittal Form* ***must*** *be completed and timely submitted to avoid abandonment.*

UNITED STATES PATENT AND TRADEMARK OFFICE

Commissioner for Patents
United States Patent and Trademark Office
P.O. Box 1450
Alexandria, VA 22313-1450
www.uspto.gov

COPY MAILED

AUG 0 2 2007

OFFICE OF PETITIONS

**Haynes and Boone, LLP**
**901 Main Street, Suite 3100**
**Dallas, TX 75202**

| | | |
|---|---|---|
| In re Application of | : | |
| Robert Lance Cook | : | |
| Application No. 10/525,888 | : | DECISION ON PETITION |
| Filed: September 19, 2005 | : | TO WITHDRAW |
| Attorney Docket No. 25791.125.03 | : | FROM RECORD |
| | : | |

This is a decision on the Request to Withdraw as attorney or agent of record under 37 C.F.R. § 1.36(b), filed April 18, 2007.

The request is **NOT APPROVED**.

A grantable request to withdraw as attorney/agent of record must be signed by every attorney/agent seeking to withdraw or contain a clear indication that one attorney is signing on behalf of another/others. A request to withdraw will not be approved unless at least 30 (thirty) days would remain between the date of approval and the later of the expiration date of a time to file a response or the expiration date of the maximum time period which can be extended under 37 C.F.R. § 1.136(a).

The request cannot be approved because no reasons for withdrawal have been provided. The Office cannot, at this time, determine whether practitioner's request is one of the mandatory or permissive reasons enumerated in 37 CFR 10.40. Any subsequent requests must include reasons for withdrawal. Please note that there is a space provided for on PTO/SB/83 (Request to Withdraw as Attorney or Agent) to supply practitioner's reasons.

A courtesy copy of this decision is being mailed to the first named signing inventor. A courtesy copy is being mailed to the address noted in the request. If the attorneys with this firm desire to receive future communication concerning this application, the proper power of attorney documents should be submitted.

There are no outstanding Office actions at this time.

All future communications from the Office will continue to be directed to the above-listed address until otherwise notified by applicant.

Telephone inquiries concerning this decision should be directed to Kimberly Inabinet at 571-272- 4618.

Frances Hicks
Petitions Examiner
Office of Petitions

cc: Robert Lance Cook
934 Caswell Court
Katy, TX 77450

cc: Todd Mattingly
King & Spalding, LLP
1100 Louisiana Street, Suite 4000
Houston, TX 77002

05 OCT 2006

UNITED STATES PATENT AND TRADEMARK OFFICE

Commissioner for Patents
United States Patent and Trademark Office
P.O. Box 1450
Alexandria, VA 22313-1450
www.uspto.gov

Glaxosmithkline
Corporate Intellectual Property - UW2220
P O Box 1539
King of Prussia PA 19406-0939

In re Application of
BIEMANS et al.
Application No.: 10/525,889
PCT No.: PCT/EP2003/010085
Int. Filing Date: 28 August 2003
Priority Date: 30 August 2002
Attorney Docket No.: VB60395
For: METHOD FOR REFOLDING NEISSERIAL NSPA PROTEIN

DECISION

This decision is in response to applicants' "PETITION TO WITHDRAW HOLDING OF ABANDONMENT UNDER 37 CFR 1.181" filed in the United States Patent and Trademark Office (USPTO) on 03 August 2006. No petition fee is required.

## BACKGROUND

On 28 August 2003, applicants filed international application PCT/EP2003/010085, which designated the United States and claimed a priority date of 30 August 2002. A copy of the international application was communicated to the United States Patent and Trademark Office from the International Bureau on 11 March 2004. The thirty-month period for paying the basic national fee in the United States expired at midnight on 28 February 2005.

On 25 February 2005, applicants filed, *inter alia*, a submission for entry into the national stage in the United States which was accompanied by, *inter alia*, the U.S. Basic National Fee.

On 14 July 2005, the United States Designated/Elected Office (DO/EO/US) mailed a NOTIFICATION OF MISSING REQUIREMENTS UNDER 35 U.S.C. 371 (Form PCT/DO/EO/905) indicating, *inter alia*, that an oath or declaration in compliance with 37 CFR 1.497(a)-(b) and the surcharge under 37 CFR 1.492(e) for providing the oath or declaration later than thirty months from the priority date were required. The Notification set a two-month extendable period for reply.

On 21 July 2006, the DO/EO/US mailed a NOTIFICATION OF ABANDONMENT (Form PCT/DE/EO/909) indicating that the application was abandoned as to the United States of America for failure to reply to the NOTIFICATION OF MISSING REQUIREMENTS mailed 14 July 2005.

On 03 August 2006, applicants filed the instant "PETITION TO WITHDRAW HOLDING OF ABANDONMENT UNDER 37 CFR 1.181". The petition was accompanied by, *inter alia*, copies of two declarations of inventors.

## DISCUSSION

The petition states that a response was submitted via facsimile transmission to the USPTO on 03 October 2005 and includes a copy of the purported response. However, petitioner has not established that such a response was filed on that date. The petition states that a "copy of the Auto-Reply facsimile transmission confirmation" is included. However, no such copy appears in the application file.

It is also noted that the declarations of inventors submitted 03 August 2006 do not comply with 37 CFR 1.497(a)-(b) because not all of the inventors have executed the declarations. (The copy of the second declaration of inventors is missing page 3). Additionally, the complete declaration filed 03 August 2006 fails to comply with 37 CFR 1.497(a)-(b) because it does not list the correct inventorship. There is a difference in names in one of the named inventors between the published international application (Jan Tommassen) and the declaration of inventors (Johannes Petrus Maria Tommassen). Because this difference in names is more than a mere typographical error or a phonetic misspelling of applicant's legal name, a proper petition under 37 CFR 1.182 is required in order to resolve the matter. Such a petition must be accompanied by the requisite petition fee of $400 as well as a statement from the inventor. This statement should set forth that he is a joint inventor of the subject matter of the present application and should set forth the circumstances surrounding the difference in names on the international application and the declaration.

It is also noted that paragraph 5 of the petition states that "no Notification was received in this case". However, the copy of the submission purportedly filed 03 October 2005 states that the submission "is in response to the 'Notification of Missing Requirements' mailed 14 July 2005".

## CONCLUSION

The petition under 37 CFR 1.181 is **DISMISSED** without prejudice for the reasons set forth above.

The application is abandoned for the reasons set forth in the NOTIFICATION OF ABANDONMENT mailed 21 July 2006.

If reconsideration on the merits of this petition is desired, a proper reply must be filed within TWO (2) MONTHS form the mail date of this decision. Any reconsideration request should include a cover letter entitled "Renewed Petition Under 37 CFR 1.181." No additional petition fee is required. Extensions of time may be obtained under 37 CFR 1.136(a).

Please direct further correspondence with respect to this matter to Mail Stop PCT, Commissioner for Patents, Office of PCT Legal Administration, P.O. Box 1450, Alexandria, Virginia 22313-1450, with the contents of the letter marked to the attention of the Office of PCT Legal Administration.

Daniel Stemmer
Legal Examiner
PCT Legal Affairs
Office of Patent Cooperation Treaty
Legal Administration
Telephone: (571) 272-3301
Facsimile: (571) 273-0459

UNITED STATES PATENT AND TRADEMARK OFFICE

Commissioner for Patents
United States Patent and Trademark Office
P.O. Box 1450
Alexandria, VA 22313-1450
www.uspto.gov

08 AUG 2007

Glaxosmithkline
Corporate Intellectual Property - UW2220
P O Box 1539
King of Prussia PA 19406-0939

| | | |
|---|---|---|
| In re Application of | : | |
| BIEMANS et al. | : | |
| Application No.: 10/525,889 | : | DECISION |
| PCT No.: PCT/EP2003/010085 | : | |
| Int. Filing Date: 28 August 2003 | : | |
| Priority Date: 30 August 2002 | : | |
| Attorney Docket No.: VB60395 | : | |
| For: METHOD FOR REFOLDING | : | |
| NEISSERIAL NSPA PROTEIN | : | |

This decision is in response to applicants' "RENEWED PETITION TO WITHDRAW HOLDING OF ABANDONMENT UNDER 37 CFR 1.181" filed in the United States Patent and Trademark Office (USPTO) on 27 November 2006. No petition fee is required.

## BACKGROUND

On 28 August 2003, applicants filed international application PCT/EP2003/010085, which designated the United States and claimed a priority date of 30 August 2002. A copy of the international application was communicated to the United States Patent and Trademark Office from the International Bureau on 11 March 2004. The thirty-month period for paying the basic national fee in the United States expired at midnight on 28 February 2005.

On 25 February 2005, applicants filed, *inter alia*, a submission for entry into the national stage in the United States which was accompanied by, *inter alia*, the U.S. Basic National Fee.

On 14 July 2005, the United States Designated/Elected Office (DO/EO/US) mailed a NOTIFICATION OF MISSING REQUIREMENTS UNDER 35 U.S.C. 371 (Form PCT/DO/EO/905) indicating, *inter alia*, that an oath or declaration in compliance with 37 CFR 1.497(a)-(b) and the surcharge under 37 CFR 1.492(e) for providing the oath or declaration later than thirty months from the priority date were required. The Notification set a two-month extendable period for reply.

On 21 July 2006, the DO/EO/US mailed a NOTIFICATION OF ABANDONMENT (Form PCT/DE/EO/909) indicating that the application was abandoned as to the United States of America for failure to reply to the NOTIFICATION OF MISSING REQUIREMENTS mailed 14 July 2005.

On 03 August 2006, applicants filed a "PETITION TO WITHDRAW HOLDING OF ABANDONMENT UNDER 37 CFR 1.181". The petition was accompanied by, *inter alia*, copies of two declarations of inventors.

On 05 October 2006, a decision was mailed dismissing without prejudice applicants' petition under 37 CFR 1.181 because a copy of the Auto-Reply facsimile transmission confirmation referred to in the petition did not appear to have been provided. It was also noted that page 3 of the second declaration of inventors was missing and that there was a difference in names in one of the named inventors between the published international application (Jan Tommassen) and the declaration of inventors (Johannes Petrus Maria Tommassen). The decision indicated that because this difference in names is more than a mere typographical error or a phonetic misspelling of applicant's legal name, a proper petition under 37 CFR 1.182 was required in order to resolve the matter.

On 27 November 2006, applicants filed the instant "RENEWED PETITION TO WITHDRAW HOLDING OF ABANDONMENT UNDER 37 CFR 1.181". The petition was accompanied by, *inter alia*, a copy of an Auto-Reply facsimile transmission confirmation, copies of two declarations of inventors, and a petition under 37 CFR 1.182.

## DISCUSSION

Petition Under 37 CFR 1.181

Applicants have provided sufficient evidence to establish that on 03 October 2005 applicants filed two declarations of the inventors. The proof is in the form of the copy of the "Auto-Reply Facsimile Transmission" which bears a date of 03 October 2005 and which itemizes an "Response to Notification of Missing Requirements" and identifies the above-captioned application number and docket number. Further, practitioner states that the copy of the declarations filed 27 November 2006 are copies of the declarations originally filed 03 October 2005. Therefore, in view of the "Auto-Reply Facsimile Transmission" and practitioner's statement, the declarations received on 27 November 2006 may properly be accepted as originally received in the USPTO on 03 October 2005. The NOTIFICATION OF ABANDONMENT mailed 14 July 2005 is hereby vacated.

Petition Under 37 CFR 1.182

The petition fee has been paid. The statement of Johannes Petruss Maria Tommassen filed 27 November 2006 is accepted.

Declaration of Inventors

The declaration of inventors filed 03 October 2005 is not in compliance with 37 CFR 1.497(a)-(b). The declaration signed by Karine Goraj contains an alteration. The alteration appears to be initialed. However, the alteration appears to change the first name of this inventor. It is unclear exactly what the alteration changes the name to since the alteration is illegible.

Nevertheless, there is now a difference in names in the first name of this inventor between the published international application (Karine) and the declaration of inventors (illegible). If the difference is a mere typographical error or a phonetic misspelling of applicant's legal name, an explanation is required. If the differences is more than this, a proper petition under 37 CFR 1.182 is required in order to resolve the matter. Such a petition must be accompanied by the requisite petition fee of $400 as well as a statement from the inventor. This statement should set forth that he is a joint inventor of the subject matter of the present application and should set forth the circumstances surrounding the difference in names on the international application and the declaration.

## CONCLUSION

For the reasons set forth above, the petition under 37 CFR 1.181 is GRANTED.

For the reasons set forth above, the petition under 37 CFR 1.182 is GRANTED.

For the reasons set forth above, the NOTIFICATION OF ABANDONMENT mailed 14 July 2005 is VACATED.

A proper response must be filed within a time limit of ONE MONTH from the date of this decision. A proper response must include (1) a new declaration signed by Miss Goraj with a legible first name and (2) an explanation if the difference in names is a mere typographical error or a phonetic misspelling of applicant's legal name or a proper petition under 37 CFR 1.182 if the difference is more than that.

Please direct further correspondence with respect to this matter to Mail Stop PCT, Commissioner for Patents, Office of PCT Legal Administration, P.O. Box 1450, Alexandria, Virginia 22313-1450, with the contents of the letter marked to the attention of the Office of PCT Legal Administration.

Daniel Stemmer
Legal Examiner
PCT Legal Affairs
Office of Patent Cooperation Treaty
Legal Administration
Telephone: (571) 272-3301
Facsimile: (571) 273-0459

UNITED STATES PATENT AND TRADEMARK OFFICE

UNITED STATES DEPARTMENT OF COMMERCE
United States Patent and Trademark Office
Address: COMMISSIONER FOR PATENTS
P.O. Box 1450
Alexandria, Virginia 22313-1450
www.uspto.gov

SYNGENTA CROP PROTECTION , INC.
PATENT AND TRADEMARK DEPARTMENT
410 SWING ROAD
GREENSBORO, NC 27409

Mail Date: 04/20/2010

| | | |
|---|---|---|
| **Applicant** | : Werner Zambach | : DECISION ON REQUEST FOR |
| **Patent Number** | : 7608631 | : RECALCULATION of PATENT |
| **Issue Date** | : 10/27/2009 | : TERM ADJUSTMENT IN VIEW |
| **Appliction No** | : 10/525,891 | : OF WYETH AND NOTICE OF INTENT TO |
| **Filed** | : 02/25/2005 | : ISSUE CERTIFICATE OF CORRECTION |
| | | : |

The Request for Recalculation is **GRANTED** to the extent indicated.

The patent term adjustment has been determined to be **1247** days. The USPTO will *sua sponte* issue a certificate of correction reflecting the amount of PTA days determined by the recalculation.

Prior to the issuance of the certificate of correction, the USPTO will afford patentee an opportunity to be heard and request reconsideration. Accordingly, patentee has **one month or thirty (30) days**, whichever is longer, to file a request for reconsideration of this patent term adjustment calculation. See 35 U.S.C. 154(b)(3)(B)(ii) and 37 CFR 1.322(a)(4). No extensions of time will be granted under 37 CFR 1.136.

Patentee should use document code PET.OP if electronically filing a request for reconsideration of this patent term adjustment calculation. The patentee must also include the information required by 37 CFR 1.705(b)(2) and the fee required by 37 CFR 1.18(e). If patentee does not file a timely request for reconsideration of this patent term adjustment calculation including the information required by 37 CFR 1.705(b)(2) and the fee required by 37 CFR 1.18(e), the USPTO will issue a certificate of correction reflecting the PTA determination noted above.

Patentee should be aware that in order to preserve the right to review in the United States District Court for the District of Columbia of the USPTO patent term adjustment determination, patentee must ensure that he or she also take the steps required under 35 U.S.C. 154(b)(4)(A) in a timely manner. Nothing in the request for recalculation should be construed as providing an alternative time frame for commencing a civil action under 35 U.S.C. 154(b)(4)(A).

Any questions concerning this decision should be directed to the Office of Patent Legal Administration at 571-272-7702.

## SPE RESPONSE FOR CERTIFICATE OF CORRECTION

**Paper No.**:20090831

**DATE** : August 31, 2009

**TO SPE OF** : ART UNIT 1652

**SUBJECT** : Request for Certificate of Correction on Patent No.: 7,282,357

A response is requested with respect to the accompanying request for a certificate of correction.

Please complete this form and return with file, within **7** days to:
**Certificates of Correction Branch - ST (South Tower) 9A22**
Palm location **7590** - Tel. No. (703) 305-8309

With respect to the change(s) requested, correcting Office and/or Applicant's errors, should the patent read as shown in the certificate of correction? No new matter should be introduced, nor should the scope or meaning of the claims be changed.

**Thank You For Your Assistance** **Certificates of Correction Branch**

**The request for issuing the above-identified correction(s) is hereby:**

Note your decision on the appropriated box.

☐ **Approved** All changes apply.

☒ **Approved in Part** Specify below which changes **do not** apply.

☐ **Denied** State the reasons for denial below.

**Comments:**

Amendments not entered have been lined through. Said unentered amendments were not a fault of USPTO and would require a fee submission, since, the patent application #10/511,302 was as presented in the IDS submitted by the applicant on 12/6/2005.

ANDREW WANG
SUPERVISORY PATENT EXAMINER
TECHNOLOGY CENTER 1600

UNITED STATES PATENT AND TRADEMARK OFFICE

Commissioner for Patents
United States Patent and Trademark Office
P.O. Box 1450
Alexandria, VA 22313-1450
www.uspto.gov
DIW Jul-07

MICHAEL M RICKIN
ABB INC
LEGAL DEPARTMENT 4U6
29801 EUCLID AVENUE
WICKLIFFE OH 44092-1832

**COPY MAILED**

JUL 05 2007

**OFFICE OF PETITIONS**

| | | |
|---|---|---|
| In re Application of | : | |
| Czyzewski et al. | : | |
| Application No. 10/525911 | : | DECISION ON PETITION |
| Filed: 02/25/2005 | : | |
| Atty Docket No. PL-CRC/02/06 | : | |
| | : | |

This is a decision on the petition filed on 15 May, 2007, under 37 CFR 1.137(b),[1] to revive the above-identified application.

The petition is **GRANTED**.

The application became abandoned on 6 April, 2007, for failure to timely file the issue and publication fees in response to the Notice of Allowance and Fee(s) Due mailed on 5 January, 2007, which set a three (3) month statutory period for reply. Notice of Abandonment was mailed on 30 April, 2007.

The application is being referred to the Publishing Division for processing into a patent.

---

[1] Effective December 1, 1997, the provisions of 37 CFR 1.137(b) now provide that where the delay in reply was unintentional, a petition may be filed to revive an abandoned application or a lapsed patent pursuant to 37 CFR 1.137(b). A grantable petition filed under the provisions of 37 CFR 1.137(b) must be accompanied by:

(1) the required reply, unless previously filed. In a nonprovisional application abandoned for failure to prosecute, the required reply may be met by the filing of a continuing application. In a nonprovisional utility or plant application filed on or after June 8, 1995, and abandoned for failure to prosecute, the required reply may also be met by the filing of a request for continuing examination in compliance with § 1.114. In an application or patent, abandoned or lapsed for failure to pay the issue fee or any portion thereof, the required reply must be the payment of the issue fee or any outstanding balance thereof. In an application, abandoned for failure to pay the publication fee, the required reply must include payment of the publication fee.

(2) the petition fee as set forth in 37 CFR 1.17(m);

(3) a statement that the entire delay in filing the required reply from the due date for the reply until the filing of a grantable petition pursuant to 37 CFR 1.137(b) was unintentional. The Commissioner may required additional information where there is a question whether the delay was unintentional; and

(4) any terminal disclaimer (and fee as set forth in 37 CFR 1.20(d)) required pursuant to 37 CFR 1.137(c)).

Telephone inquiries concerning this matter may be directed to the undersigned at (571)272-3231.

D Wood

Douglas I. Wood
Senior Petitions Attorney
Office of Petitions

#4

UNITED STATES PATENT AND TRADEMARK OFFICE

Commissioner for Patents
United States Patent and Trademark Office
P.O. Box 1450
Alexandria, VA 22313-1450
www.uspto.gov

21 AUG 2006

Patent Department
Bayer CropScience LP
100 Bayer Road
Pittsburgh, PA 15205-9741

| | | |
|---|---|---|
| In re Application of | : | |
| FISCHER, Reiner, et al. | : | |
| Application No.: 10/525,920 | : | DECISION ON |
| PCT No.: PCT/EP03/09103 | : | |
| Int. Filing Date: 18 August 2003 | : | REQUEST |
| Priority Date: 28 August 2002 | : | |
| Attorney's Docket No.: CS8455/LeA 36,006 | : | UNDER 37 CFR 1.42 |
| For: SUBSTITUTED SPIROCYCLIC | : | |
| KETOENOLS | : | |

This decision responds to applicants' submission of a declaration of the inventors on 25 February 2005, containing an indication that joint inventor Christoph Erdelen is deceased. The declaration has been treated as a request for status under 37 CFR 1.42.

## BACKGROUND

On 18 August 2003, applicants filed international application PCT/EP03/09103, claiming a priority date of 28 August 2002. The deadline for submitting the basic national fee to prevent abandonment of the international application as to the United States expired at midnight of 28 February 2005.

On 25 February 2005, applicants filed a submission for entry into the national stage in the United States which was accompanied by, *inter alia*, the U.S. Basic National Fee and a declaration of the inventors.

## DISCUSSION

Under 35 U.S.C. §117, legal representatives of deceased inventors may make application for patent upon compliance with the requirements and on the same terms and conditions applicable to the inventor. The "legal representative (executor, administrator, etc.) of the deceased inventor may make the necessary oath or declaration, and apply for and obtain the patent." 37 C.F.R. 1.42.

The declaration provided does not state that the heir, Angelika Lubos-Erdelen is the sole heir of the deceased joint inventor, Christoph Erdelen. If a legal representative has been or is required to be appointed under applicable law, such person must sign the declaration and indicate the relationship, e.g., "legal representative of inventor Christoph Erdelen." Otherwise, all heirs of Christoph Erdelen must sign the declaration and indicate the relationship, *e.g.*, "sole heir of

Christoph Erdelen," or "legal representative of Christoph Erdelen." The indication that Angelika Lubos-Erdelen is an heir leaves open the possibility that there are other non-signing joint heirs. If Ms. Angelika Lubos-Erdelen is the sole heir and is signing the declaration as the legal representative of the estate of Christoph Erdelen, a statement to that effect will be sufficient.

## CONCLUSION

For the above reasons, the request for status under 37 C.F.R. 1.42 is **REFUSED**.

Applicants are required to submit an oath or declaration in compliance with 37 C.F.R. 1.497 and 1.42 within a time period of **TWO (2) MONTHS** from the mail date of this Decision. THIS PERIOD FOR RESPONSE MAY BE EXTENDED UNDER 37 C.F.R. 1.136(a). FAILURE TO PROPERLY RESPOND WILL RESULT IN ABANDONMENT. Any request for reconsideration of this decision should include a cover letter entitled "Renewed Submission Under 37 CFR 1.42."

Any further correspondence with respect to this matter should be addressed to the Mail Stop PCT, Commissioner for Patents, Office of PCT Legal Administration, P.O. Box 1450, Alexandria, Virginia 22313-1450, with the contents of the letter marked to the attention of the Office of PCT Legal Administration.

Erin P. Thomson

Erin P. Thomson
Attorney Advisor
PCT Legal Administration

Telephone: 571-272-3292
Facsimile: 571-273-0459

2 9 JAN 2007

UNITED STATES PATENT AND TRADEMARK OFFICE

Commissioner for Patents
United States Patent and Trademark Office
P.O. Box 1450
Alexandria, VA 22313-1450
www.uspto.gov

Patent Department
Bayer CropScience LP
100 Bayer Road
Pittsburgh, PA 15205-9741

| | | |
|---|---|---|
| In re Application of | : | |
| FISCHER, Reiner, et al. | : | |
| Application No.: 10/525,920 | : | DECISION ON |
| PCT No.: PCT/EP03/09103 | : | |
| Int. Filing Date: 18 August 2003 | : | REQUEST |
| Priority Date: 28 August 2002 | : | |
| Attorney's Docket No.: CS8455/LeA 36,006 | : | UNDER 37 CFR 1.42 |
| For: SUBSTITUTED SPIROCYCLIC | : | |
| KETOENOLS | : | |

This decision responds to applicants' 13 October 2006 submission to the United States Patent and Trademark Office.

## BACKGROUND

On 21 August 2006, the Office mailed Decision On Request Under 37 CFR 1.42, refusing applicants' request for status.

On 13 October 2006, applicants filed this renewed submission.

## DISCUSSION

Under 35 U.S.C. §117, legal representatives of deceased inventors may make application for patent upon compliance with the requirements and on the same terms and conditions applicable to the inventor. The "legal representative (executor, administrator, etc.) of the deceased inventor may make the necessary oath or declaration, and apply for and obtain the patent." 37 C.F.R. 1.42.

Applicants state that they believe Angelika Lubos-Erdelen is the sole heir of Christoph Erdelen. The submission of a declaration executed by the heirs or sole heir is considered an indication that a legal representative has not been nor is one required to be appointed under applicable law. If this is not correct, the Office must be notified immediately and applicant must submit a declaration executed by the legal representative, stating the relationship.

## CONCLUSION

For the above reasons, the request for status under 37 CFR 1.42 is **GRANTED**.

The application has a date of 25 February 2005 under 35 U.S.C. §371(c)(1), (c)(2) and (c)(4). This application is being forwarded to the National Stage Processing Division of the Office of the PCT Operations for continued processing.

Erin P. Thomson

Erin P. Thomson
Attorney Advisor
PCT Legal Administration

Telephone: 571-272-3292
Facsimile: 571-273-0459

UNITED STATES PATENT AND TRADEMARK OFFICE

Commissioner for Patents
United States Patent and Trademark Office
P.O. Box 1450
Alexandria, VA 22313-1450
www.uspto.gov

**RICHARD T BLACK**
**BLACK LOWE & GRAHAM**
**701 FIFTH AVENUE**
**SUITE 4800**
**SEATTLE, WA 98104**

COPY MAILED
JUN 0 7 2006
OFFICE OF PETITIONS

| | | |
|---|---|---|
| In re Application of | : | |
| Leonid B. Rubin et al | : | |
| Application No. 10/525,923 | : | DECISION ON PETITION |
| Filed: February 25, 2005 | : | TO MAKE SPECIAL UNDER |
| Attorney Docket No. DFEI-1-1001 | : | 37 CFR 1.102(c)(1) |

This is a decision on the petition under 37 CFR 1.102(c)(1), filed May 8, 2006, to make the above-identified application special based on applicant's age as set forth in M.P.E.P. § 708.02, Section IV.

The petition is **GRANTED**.

A grantable petition to make an application special under 37 CFR 1.102(c)(1) and MPEP § 708.02, Section IV: Applicant's Age must be accompanied by evidence showing that at least one of the applicants is 65 years of age, or more, such as a birth certificate or a statement by applicant. No fee is required.

The petition includes a copy of a driver's license and a statement by Leonid Rubin attesting that he is over 65 years of age. Accordingly, the above-identified application has been accorded "special" status.

Telephone inquiries concerning this decision should be directed to Wan Laymon at 571-272-3220.

All other inquiries concerning either the examination or status of the application should be directed to the Technology Center.

This application is being referred to Technology Center AU 1753 for action on the merits commensurate with this decision.

Wan Laymon

Wan Laymon
Petitions Examiner
Office of Petitions

UNITED STATES PATENT AND TRADEMARK OFFICE

UNITED STATES DEPARTMENT OF COMMERCE
United States Patent and Trademark Office
Address: COMMISSIONER FOR PATENTS
P.O. Box 1450
Alexandria, Virginia 22313-1450
www.uspto.gov

NIXON & VANDERHYE, PC
901 NORTH GLEBE ROAD, 11TH FLOOR
ARLINGTON, VA 22203

Mail Date: 05/03/2010

| | | |
|---|---|---|
| **Applicant** | : Bernd Rehm | : DECISION ON REQUEST FOR |
| **Patent Number** | : 7622277 | : RECALCULATION of PATENT |
| **Issue Date** | : 11/24/2009 | : TERM ADJUSTMENT IN VIEW |
| **Application No** | : 10/525,955 | : OF WYETH AND NOTICE OF INTENT TO |
| **Filed** | : 03/31/2006 | : ISSUE CERTIFICATE OF CORRECTION |
| | | : |

The Request for Recalculation is **GRANTED** to the extent indicated.

The patent term adjustment has been determined to be **147** days. The USPTO will *sua sponte* issue a certificate of correction reflecting the amount of PTA days determined by the recalculation.

Prior to the issuance of the certificate of correction, the USPTO will afford patentee an opportunity to be heard and request reconsideration. Accordingly, patentee has **one month or thirty (30) days**, whichever is longer, to file a request for reconsideration of this patent term adjustment calculation. See 35 U.S.C. 154(b)(3)(B)(ii) and 37 CFR 1.322(a)(4). No extensions of time will be granted under 37 CFR 1.136.

Patentee should use document code PET.OP if electronically filing a request for reconsideration of this patent term adjustment calculation. The patentee must also include the information required by 37 CFR 1.705(b)(2) and the fee required by 37 CFR 1.18(e). If patentee does not file a timely request for reconsideration of this patent term adjustment calculation including the information required by 37 CFR 1.705(b)(2) and the fee required by 37 CFR 1.18(e), the USPTO will issue a certificate of correction reflecting the PTA determination noted above.

Patentee should be aware that in order to preserve the right to review in the United States District Court for the District of Columbia of the USPTO patent term adjustment determination, patentee must ensure that he or she also take the steps required under 35 U.S.C. 154(b)(4)(A) in a timely manner. Nothing in the request for recalculation should be construed as providing an alternative time frame for commencing a civil action under 35 U.S.C. 154(b)(4)(A).

Any questions concerning this decision should be directed to the Office of Patent Legal Administration at 571-272-7702.

UNITED STATES PATENT AND TRADEMARK OFFICE

UNITED STATES DEPARTMENT OF COMMERCE
United States Patent and Trademark Office
Address: COMMISSIONER FOR PATENTS
P.O. Box 1450
Alexandria, Virginia 22313-1450
www.uspto.gov

BUCHANAN, INGERSOLL & ROONEY PC
POST OFFICE BOX 1404
ALEXANDRIA, VA 22313-1404

Mail Date: 05/12/2010

| | | |
|---|---|---|
| **Applicant** | : Hiroaki Sano | : DECISION ON REQUEST FOR |
| **Patent Number** | : 7657996 | : RECALCULATION of PATENT |
| **Issue Date** | : 02/09/2010 | : TERM ADJUSTMENT IN VIEW |
| **Application No** | : 10/525,972 | : OF WYETH AND NOTICE OF INTENT TO |
| **Filed** | : 02/28/2005 | : ISSUE CERTIFICATE OF CORRECTION |
| | | : |

The Request for Recalculation is **GRANTED** to the extent indicated.

The patent term adjustment has been determined to be **1155** days. The USPTO will *sua sponte* issue a certificate of correction reflecting the amount of PTA days determined by the recalculation.

Prior to the issuance of the certificate of correction, the USPTO will afford patentee an opportunity to be heard and request reconsideration. Accordingly, patentee has **one month or thirty (30) days**, whichever is longer, to file a request for reconsideration of this patent term adjustment calculation. See 35 U.S.C. 154(b)(3)(B)(ii) and 37 CFR 1.322(a)(4). No extensions of time will be granted under 37 CFR 1.136.

Patentee should use document code PET.OP if electronically filing a request for reconsideration of this patent term adjustment calculation. The patentee must also include the information required by 37 CFR 1.705(b)(2) and the fee required by 37 CFR 1.18(e). If patentee does not file a timely request for reconsideration of this patent term adjustment calculation including the information required by 37 CFR 1.705(b)(2) and the fee required by 37 CFR 1.18(e), the USPTO will issue a certificate of correction reflecting the PTA determination noted above.

Patentee should be aware that in order to preserve the right to review in the United States District Court for the District of Columbia of the USPTO patent term adjustment determination, patentee must ensure that he or she also take the steps required under 35 U.S.C. 154(b)(4)(A) in a timely manner. Nothing in the request for recalculation should be construed as providing an alternative time frame for commencing a civil action under 35 U.S.C. 154(b)(4)(A).

Any questions concerning this decision should be directed to the Office of Patent Legal Administration at 571-272-7702.

UNITED STATES PATENT AND TRADEMARK OFFICE

Commissioner for Patents
United States Patent and Trademark Office
P.O. Box 1450
Alexandria, VA 22313-1450
www.uspto.gov

November 17, 2009

Patent No. : 7,432,769 B2
Appl. No. : 10/525,983
Inventor(s) : Isami Kato, et al.
Issued : October 7, 2008
Title : **OSCILLATOR CIRCUIT**
Docket No. : **5000-5247**

Re: Request for Certificate of Correction

Consideration has been given your request for the issuance of a certificate of correction for the above-identified patent under the provisions of Rule 1.322(b).

Assignees' names and addresses (assignment data) printed in a patent, are based *solely* on information supplied in the appropriate space for identifying the assignment data, i.e., item 3 of the Issue Fee Transmittal Form PTOL-85B. Granting of a request under 37 CFR 3.81(b) is required to correct applicant's error providing ***incorrect or erroneous*** assignment data, *before* issuance of a Certificate of Correction, under 37 CFR 1.323 *(see Manual of Patent Examining Procedures (M.P.E.P) Chp.1400, sect. 1481).* This procedure is required *at any time after the issue fee is paid*, including after issuance of the patent.

In view of the foregoing, your request, in this mater, is hereby denied.

A request to correct the Assignee under 37 CFR 3.81(b) should include:

A. **the processing fee set forth in 37 CFR 1.117(h) (currently $130);**
B. a statement that the failure to include the correct assignee name on the PTOL-85B was inadvertent; and
C. a copy of the Notice of Recordation of Assignment Document, reflecting the reel and frame number where the assignment(s) is recorded and/or reflecting proof of *the date* the assignment was submitted for recordation.

*In the Request*, Applicant(s) may request that the file be forwarded to Certificates of Correction Branch, for issuance of a Certificate of Correction, if the Request is granted.

Any request under 37 CFR 3.81(b) should be directed to the following address or facsimile number:

By mail: Mail Stop PETITIONS
Commissioner for Patents
Post Office Box 1450
Alexandria, VA 22313-1450

By hand: Customer Service Window
Mail Stop Petitions
Randolph Building
401 Dulany Street
Alexandria, VA 22314

By fax: (571) 273-0025
ATTN: Office of Petitions

If a fee (currently $100) was previously submitted for consideration of a Request for Certificate of Correction, under CFR 1.323, to correct assignment data, , no additional fee is required.

Antonio Johnson
For Mary F. Diggs
Decisions & Certificates
of Correction Branch
(571)272-0483

MORGAN & FINNEGAN Transition Team
C/O Locke Lord Bissell & Liddell
3 WORLD FINANCIAL CENTER
NEW YORK NY 10281-2101

UNITED STATES PATENT AND TRADEMARK OFFICE

Commissioner for Patents
United States Patent and Trademark Office
P.O. Box 1450
Alexandria, VA 22313-1450
www.uspto.gov

**MORRISON & FOERSTER LLP**
**1650 TYSONS BOULEVARD**
**SUITE 400**
**MCLEAN VA 22102**

COPY MAILED

JUL 16 2007

OFFICE OF PETITIONS

In re Application of :

**BOHMER,** Bernhard et al. :
Application No. 10/525,989 :
Filed: March 01, 2005 :
Attorney Docket No. **449122079900** :

DECISION ON PETITION
TO WITHDRAW
FROM RECORD

This is a decision on the Request to Withdraw as attorney or agent of record under 37 C.F.R. § 1.36(b), filed May 25, 2007.

The request is **APPROVED**.

A grantable request to withdraw as attorney/agent of record must be signed by every attorney/agent seeking to withdraw or contain a clear indication that one attorney is signing on behalf of another/others. A request to withdraw will not be approved unless at least 30 (thirty) days would remain between the date of approval and the later of the expiration date of a time to file a response or the expiration date of the maximum time period which can be extended under 37 C.F.R. § 1.136(a).

The request was signed by Deborah S. Gladstein on behalf of all attorneys of record who are associated. All attorneys/agents associated have been withdrawn. Applicant is reminded that there is no attorney of record at this time.

The request to change the correspondence of record is not acceptable as the requested correspondence address is not that of: (1) the first named signing inventor; or (2) an intervening assignee of the entire interest under 37 C.F.R 3.71. All future communications from the Office will be directed to the first named signing inventor at the first copied address below until otherwise properly notified by the applicant.

Telephone inquiries concerning this decision should be directed to Tredelle Jackson at 571-272-2783.

Monica A. Graves
Petitions Examiner
Office of Petitions

cc: **BERNARD BOHMER**
**OLYMPISCHE STR. 4**
**BERLIN, GERMANY 14052**

cc: **KEVIN SPIVAK, BELL BOYD & LLOYD LLC**
**70 WEST MADISON STREET**
**SUITE 3100**
**CHICAGO, IL 60602-4207**

## SPE RESPONSE FOR CERTIFICATE OF CORRECTION

Paper No.: _____

DATE : March 18, 2008

TO SPE OF : ART UNIT 1652

SUBJECT : Request for Certificate of Correction for Appl. No 10/525991 patent no7262283

Please respond to this request for a certificate of correction within 7 days.

Please review the requested changes/corrections as shown in the **COCIN** document(s) in the IFW application image. No new matter should be introduced, nor should the scope or meaning of the claims be changed.

Please complete the response (see below) and forward the completed response to scanning using document code **COCX**.


**Magdalene Talley**

Certificates of Correction Branch

703-308-9390 ext. 116


**Thank You For Your Assistance**

**The request for issuing the above-identified correction(s) is hereby:**

Note your decision on the appropriate box.

- ☑ **Approved** — All changes apply.
- ☐ **Approved in Part** — Specify below which changes **do not** apply.
- ☐ **Denied** — State the reasons for denial below.

**Comments:** _____

SPE

1656

Art Unit

31 AUG 2005

UNITED STATES PATENT AND TRADEMARK OFFICE

Commissioner for Patents
United States Patent and Trademark Office
P.O. Box 1450
Alexandria, VA 22313-1450
www.uspto.gov

Robert H. Resis
Banner & Witcoff
10 South Wacker Drive
Suite 3000
Chicago, IL 60606

| | |
|---|---|
| In re Application of<br>ARORA et al.<br>Application No.: 10/525,992<br>PCT No.: PCT/IN03/00289<br>Int. Filing Date: 27 August 2003<br>Priority Date: 28 August 2002<br>Attorney Docket No.: 006420.00003<br>For: HERBAL EXTRACT COMPRISING A MIXTURE OF SAPONINS OBTAINED FROM SAPINDUS TRIFOLIATUS FOR ANTICONVULSANT ACTIVITY | DECISION |

This decision is in response to applicants' "Communication for Which There is No Other Form" filed in the United States Patent and Trademark Office (USPTO) on 18 August 2005, which is being treated as a petition under 37 CFR 1.181 requesting that the Notification of Acceptance mailed 19 July 2005 be vacated. No petition fee is due.

## BACKGROUND

On 28 February 2005, applicants timely filed a request to enter into the national stage under 35 U.S.C. 371 along with, among other things, the appropriate basic national filing fee; a copy of the international application; and a preliminary amendment. The international application furnished by the International Bureau included an executed Declaration of Inventorship under PCT Rules 4.17(iv) and 51bis.1(a)(iv).

On 19 July 2005, a Notification of Acceptance was issued identifying the 35 U.S.C. 371(c) date as 28 February 2005. Subsequently, an Official Filing Receipt was issued indicating a "FILING DATE" of 28 February 2005.

On 18 August 2005, applicants filed the present request which included a combined declaration and power of attorney executed by the five joint-inventors.

## DISCUSSION

Applicants state in their present request that, "the Notification of Acceptance under 35 U.S.C. 371 and 37 CFR 1.495 was erroneously sent in place of a Notice of Missing Requirements. An unexecuted Declaration was filed on February 28, 2005 along with the application and other pertinent documents . . . Applicant should have received a Notice of

Missing Requirements requesting an executed Declaration." As stated above, the international application forwarded to the USPTO by the International Bureau included a Declaration of Inventorship under PCT Rules 4.17(iv) and 51bis.1(a)(iv) for the purposes of the designation of the United States of America. The declaration executed by the named inventors is in compliance with 37 CFR 1.497(a)-(b) and thus satisfied the provisions of 35 U.S.C. 371(c)(4). Therefore, applicants' request to vacate the Notification of Acceptance is dismissed without prejudice.

## CONCLUSION

Applicants' request to withdraw the Notification of Acceptance under 37 CFR 1.181 is **DISMISSED** without prejudice.

This application has an international filing date of 27 August 2003 under 35 U.S.C. 363 and a date of **28 February 2005** under 35 U.S.C. 371(c).

This application is being returned to the United States Designated/Elected Office (DO/EO/US) for further processing.

Anthony Smith

Anthony Smith
Attorney-Advisor
Office of PCT Legal Administration
Telephone: 571-272-3298
Fax: 571-273-0459

## SPE RESPONSE FOR CERTIFICATE OF CORRECTION

Paper No.: _____

DATE : Dec. 19, 2008

TO SPE OF : ART UNIT 2811

SUBJECT : Request for Certificate of Correction for Appl. No.:/10/525996 /7361971

Please respond to this request for a certificate of correction within 7 days.

**FOR IFW FILES:** Should Reference be added?

Please review the requested changes/corrections as shown in the **COCIN** document(s) in the IFW application image. No new matter should be introduced, nor should the scope or meaning of the claims be changed.

Please complete the response (see below) and forward the completed response to scanning using document code **COCX**.

**FOR PAPER FILES:**

Please review the requested changes/corrections as shown in the attached certificate of correction. Please complete this form (see below) and forward it with the file to:

**Certificates of Correction Branch (CofC)**
**South Tower - 9A22**
**Palm Location 7580**

*Magdalene Talley*
**Certificates of Correction Branch**
**703-308-9390 ext. 116**

**Thank You For Your Assistance**

**The request for issuing the above-identified correction(s) is hereby:**
Note your decision on the appropriate box.

- [x] **Approved** — **All** changes apply.
- [ ] **Approved in Part** — Specify below which changes **do not** apply.
- [ ] **Denied** — State the reasons for denial below.

**Comments:** _____

UNITED STATES PATENT AND TRADEMARK OFFICE

Commissioner for Patents
United States Patent and Trademark Office
P.O. Box 1450
Alexandria, VA 22313-1450
www.uspto.gov

**JEFFER, MANGELS, BUTLER & MARMARO, LLP**
**1900 AVENUE OF THE STARS, 7TH FLOOR**
**LOS ANGELES CA 90067**

**COPY MAILED**

OCT 1 2 2007

**OFFICE OF PETITIONS**

In re Application of :
**TAKIZAWA**, et al. :
Application No. 11/061,358 : DECISION GRANTING PETITION
Filed: February 18, 2005 : UNDER 37 CFR 1.313(c)(2)
Attorney Docket No. 57139-5073 :

This is a decision on the petition under 37 CFR 1.313(c)(2), filed October 8, 2007, to withdraw the above-identified application from issue after payment of the issue fee.

The petition is **GRANTED.**

The above-identified application is withdrawn from issue for consideration of a submission under 37 CFR 1.114 (request for continued examination). *See* 37 CFR 1.313(c)(2).

***Petitioner is advised that the issue fee paid on May 15, 2007 cannot be refunded. If, however, this application is again allowed, petitioner may request that it be applied towards the issue fee required by the new Notice of Allowance.***[1]

Telephone inquiries should be directed to Monica A. Graves at (571) 272-7253.

This application is being referred to Technology Center AU 3745 for processing of the request for continued examination under 37 CFR 1.114 and for consideration of the concurrently filed information disclosure statement.

Karen Creasy

Karen Creasy
Petitions Examiner
Office of Petitions

---

[1] *The request to apply the issue fee to the new Notice may be satisfied by completing and returning the new Part B – Fee(s) Transmittal Form (along with any balance due at the time of submission). Petitioner is advised that the Issue Fee Transmittal Form* ***must*** *be completed and timely submitted to avoid abandonment of the application.*

UNITED STATES PATENT AND TRADEMARK OFFICE

UNITED STATES DEPARTMENT OF COMMERCE
United States Patent and Trademark Office
Address: COMMISSIONER FOR PATENTS
P.O. Box 1450
Alexandria, Virginia 22313-1450
www.uspto.gov

BANNER & WITCOFF, LTD.
TEN SOUTH WACKER DRIVE
SUITE 3000
CHICAGO, IL 60606

Mail Date: 04/21/2010

| | | |
|---|---|---|
| **Applicant** | : Jarle Belt | : DECISION ON REQUEST FOR |
| **Patent Number** | : 7611611 | : RECALCULATION of PATENT |
| **Issue Date** | : 11/03/2009 | : TERM ADJUSTMENT IN VIEW |
| **Appliction No** | : 10/526,032 | : OF WYETH AND NOTICE OF INTENT TO |
| **Filed** | : 09/09/2005 | : ISSUE CERTIFICATE OF CORRECTION |
| | | : |

The Request for Recalculation is **GRANTED** to the extent indicated.

The patent term adjustment has been determined to be **1024** days. The USPTO will *sua sponte* issue a certificate of correction reflecting the amount of PTA days determined by the recalculation.

Prior to the issuance of the certificate of correction, the USPTO will afford patentee an opportunity to be heard and request reconsideration. Accordingly, patentee has **one month or thirty (30) days**, whichever is longer, to file a request for reconsideration of this patent term adjustment calculation. See 35 U.S.C. 154(b)(3)(B)(ii) and 37 CFR 1.322(a)(4). No extensions of time will be granted under 37 CFR 1.136.

Patentee should use document code PET.OP if electronically filing a request for reconsideration of this patent term adjustment calculation. The patentee must also include the information required by 37 CFR 1.705(b)(2) and the fee required by 37 CFR 1.18(e). If patentee does not file a timely request for reconsideration of this patent term adjustment calculation including the information required by 37 CFR 1.705(b)(2) and the fee required by 37 CFR 1.18(e), the USPTO will issue a certificate of correction reflecting the PTA determination noted above.

Patentee should be aware that in order to preserve the right to review in the United States District Court for the District of Columbia of the USPTO patent term adjustment determination, patentee must ensure that he or she also take the steps required under 35 U.S.C. 154(b)(4)(A) in a timely manner. Nothing in the request for recalculation should be construed as providing an alternative time frame for commencing a civil action under 35 U.S.C. 154(b)(4)(A).

Any questions concerning this decision should be directed to the Office of Patent Legal Administration at 571-272-7702.

UNITED STATES PATENT AND TRADEMARK OFFICE

UNITED STATES DEPARTMENT OF COMMERCE
United States Patent and Trademark Office
Address: COMMISSIONER FOR PATENTS
P.O. Box 1450
Alexandria, Virginia 22313-1450
www.uspto.gov

BANNER & WITCOFF, LTD.
TEN SOUTH WACKER DRIVE
SUITE 3000
CHICAGO, IL 60606

Mail Date: 05/18/2010

**Applicant** : Jarle Belt
**Patent Number** : 7611611
**Issue Date** : 11/03/2009
**Application No** : 10/526,032
**Filed** : 09/09/2005

: NOTICE CONCERNING IMPROPER
: CALCULATION OF PATENT TERM
: ADJUSTMENT BASED UPON USPTO
: IMPROPERLY MEASURING REDUCTION
: PERIOD UNDER 37 CFR 1.704(c)(10).

The United States Patent and Trademark Office (USPTO) discovered that in processing the recent recalculation decisions mailed in response to patentee's filed Request for Recalculation of Patent Term Adjustment in view of Wyeth, the USPTO improperly measured the reduction period for reductions under 37 CFR 1.704(c)(10). Pursuant to 37 CFR 1.704(c)(10), patentee's reduction begins on the date of filing the amendment under 37 CFR 1.312 ("1.312 amendment") or other related paper and ends on the date that the Office mails a response to the filing of the 1.312 amendment or other paper. It has been discovered that during the recalculation, the calculation failed to the limit the reduction to the mail date of the response to the 1.312 amendment or other paper. Accordingly, patentee's reductions were greater than warranted.

This notice **VACATES** the previous GRANTED request for recalculation and provides patentee with a revised GRANTED recalculation.

The patent term adjustment has been determined to be **1056** days. The USPTO will *sua sponte* issue a certificate of correction reflecting the amount of patent term adjustment (PTA) days determined by the recalculation.

Prior to the issuance of the certificate of correction, the USPTO will afford patentee an opportunity to be heard and request reconsideration. Accordingly, patentee has **one month or thirty (30) days** from the mail date of this notice, whichever is longer, to file a request for reconsideration of this PTA calculation. See 35 U.S.C. § 154(b)(3)(B)(ii) and 37 CFR 1.322(a)(4).

Patentee should use document code PET.OP if electronically filing a request for reconsideration of this PTA calculation. The patentee must also include the information required by 37 CFR 1.705(b)(2), and the fee required by 37 CFR 1.18(e). If patentee does not file a timely request for reconsideration of this PTA calculation, including the information required by 37 CFR 1.705(b)(2) and the fee required by 37 CFR 1.18(e), the USPTO will issue a certificate of correction reflecting the PTA determination noted above.

Patentee should be aware that in order to preserve the right of review of the USPTO's PTA determination in the United States District Court for the District of Columbia, patentee must ensure that the steps required under 35 U.S.C. § 154 (b)(4) are taken in a timely manner. Nothing in the request for recalculation should be construed as providing an alternative time frame for commencing a civil action under 35 U.S.C. § 154(b)(4).

UNITED STATES PATENT AND TRADEMARK OFFICE

UNITED STATES DEPARTMENT OF COMMERCE
United States Patent and Trademark Office
Address: COMMISSIONER FOR PATENTS
P.O. Box 1450
Alexandria, Virginia 22313-1450
www.uspto.gov

STMicroelectronics Inc.
c/o WOLF, GREENFIELD & SACKS, P.C.
600 Atlantic Avenue
BOSTON, MA 02210-2206

Mail Date: 04/20/2010

| | | |
|---|---|---|
| **Applicant** | : Olivier Monsacre | : DECISION ON REQUEST FOR |
| **Patent Number** | : 7583980 | : RECALCULATION of PATENT |
| **Issue Date** | : 09/01/2009 | : TERM ADJUSTMENT IN VIEW |
| **Appliction No** | : 10/526,033 | : OF WYETH AND NOTICE OF INTENT TO |
| **Filed** | : 11/21/2005 | : ISSUE CERTIFICATE OF CORRECTION |
| | | : |

The Request for Recalculation is **GRANTED** to the extent indicated.

The patent term adjustment has been determined to be **315** days. The USPTO will *sua sponte* issue a certificate of correction reflecting the amount of PTA days determined by the recalculation.

Prior to the issuance of the certificate of correction, the USPTO will afford patentee an opportunity to be heard and request reconsideration. Accordingly, patentee has **one month or thirty (30) days**, whichever is longer, to file a request for reconsideration of this patent term adjustment calculation. See 35 U.S.C. 154(b)(3)(B)(ii) and 37 CFR 1.322(a)(4). No extensions of time will be granted under 37 CFR 1.136.

Patentee should use document code PET.OP if electronically filing a request for reconsideration of this patent term adjustment calculation. The patentee must also include the information required by 37 CFR 1.705(b)(2) and the fee required by 37 CFR 1.18(e). If patentee does not file a timely request for reconsideration of this patent term adjustment calculation including the information required by 37 CFR 1.705(b)(2) and the fee required by 37 CFR 1.18(e), the USPTO will issue a certificate of correction reflecting the PTA determination noted above.

Patentee should be aware that in order to preserve the right to review in the United States District Court for the District of Columbia of the USPTO patent term adjustment determination, patentee must ensure that he or she also take the steps required under 35 U.S.C. 154(b)(4)(A) in a timely manner. Nothing in the request for recalculation should be construed as providing an alternative time frame for commencing a civil action under 35 U.S.C. 154(b)(4)(A).

Any questions concerning this decision should be directed to the Office of Patent Legal Administration at 571-272-7702.

UNITED STATES PATENT AND TRADEMARK OFFICE

Commissioner for Patents
United States Patent and Trademark Office
P.O. Box 1450
Alexandria, VA 22313-1450
www.uspto.gov

**OBLON, SPIVAK, MCCLELLAND MAIER & NEUSTADT, P.C.**
**1940 DUKE STREET**
**ALEXANDRIA VA 22314**

COPY MAILED

FEB 13 2008

OFFICE OF PETITIONS

In re Application of
**SHIMOYAMA,** Takeshi
Application No. 10/526,048
Filed: February 28, 2005
Attorney Docket No. 266221US6PCT

DECISION GRANTING PETITION
UNDER 37 CFR 1.313(c)(2)

This is a decision on the petition under 37 CFR 1.313(c)(2), filed February 11, 2008, to withdraw the above-identified application from issue after payment of the issue fee.

The petition is **GRANTED.**

The above-identified application is withdrawn from issue for consideration of a submission under 37 CFR 1.114 (request for continued examination). *See* 37 CFR 1.313(c)(2).

***Petitioner is advised that the issue fee paid on December 31, 2007 cannot be refunded. If, however, this application is again allowed, petitioner may request that it be applied towards the issue fee required by the new Notice of Allowance.***[1]

Telephone inquiries should be directed to Monica A. Graves at (571) 272-7253.

This application is being referred to Technology Center AU 2115 for processing of the request for continued examination under 37 CFR 1.114 and for consideration of the concurrently filed information disclosure statement.

Sherry D. Brinkley
Petitions Examiner
Office of Petitions

[1] *The request to apply the issue fee to the new Notice may be satisfied by completing and returning the new Part B – Fee(s) Transmittal Form (along with any balance due at the time of submission). Petitioner is advised that the Issue Fee Transmittal Form* ***must*** *be completed and timely submitted to avoid abandonment of the application.*

05 OCT 2006

UNITED STATES PATENT AND TRADEMARK OFFICE

Commissioner for Patents
United States Patent and Trademark Office
P.O. Box 1450
Alexandria, VA 22313-1450
www.uspto.gov

HAMRE, SCHUMANN, MUELLER & LARSON, P.C.
P.O. BOX 2902
MINNEAPOLIS MN 55402-0902

| | | |
|---|---|---|
| In re Application of | : | |
| SODE et al. | : | |
| Application No.: 10/526,049 | : | DECISION |
| PCT No.: PCT/JP2003/010541 | : | |
| Int. Filing Date: 20 August 2003 | : | |
| Priority Date: 30 August 2002 | : | |
| Attorney Docket No.: 10921.0287USWO | : | |
| For: PROCESS FOR PRODUCING | : | |
| GLUCOSE DEHYDROGENASES | : | |

This decision is in response to applicants' "REQUEST FOR WITHDRAWAL OF HOLDING OF ABANDONMENT", which has properly been treated as a petition under 37 CFR 1.181, filed in the United States Patent and Trademark Office (USPTO) on 21 August 2006. No petition fee is required.

**BACKGROUND**

On 20 August 2003, applicants filed international application PCT/JP2003/010541, which designated the United States and claimed a priority date of 30 August 2002. A copy of the international application was communicated to the United States Patent and Trademark Office from the International Bureau on 11 March 2004. The thirty-month period for paying the basic national fee in the United States expired at midnight on 28 February 2005.

On 28 February 2005, applicants filed, *inter alia*, a submission for entry into the national stage in the United States which was accompanied by, *inter alia*, the U.S. Basic National Fee and an unexecuted declaration of inventors.

On 13 September 2005, the United States Designated/Elected Office (DO/EO/US) mailed a NOTIFICATION OF MISSING REQUIREMENTS UNDER 35 U.S.C. 371 (Form PCT/DO/EO/905) indicating, *inter alia*, that an oath or declaration in compliance with 37 CFR 1.497(a)-(b) and the surcharge under 37 CFR 1.492(h) were required. The Notification set a two-month extendable period for reply.

On 21 July 2006, the DO/EO/US mailed a NOTIFICATION OF ABANDONMENT (Form PCT/DE/EO/909) indicating that the application was abandoned as to the United States of America for failure to reply to the NOTIFICATION OF MISSING REQUIREMENTS mailed 13 September 2005.

On 21 August 2006, applicants filed the instant "REQUEST FOR WITHDRAWAL OF HOLDING OF ABANDONMENT". The petition was accompanied by, *inter alia*, a copy of a "COMMUNICATION REGARDING MISSING REQUIREMENTS", a copy of a declaration of inventors, and a copy of an "Auto-Reply Facsimile Transmission" from the USPTO dated 28 September 2005.

## DISCUSSION

Applicants have provided sufficient evidence to establish that on 28 September 2005 applicants filed a declaration of the inventors. The proof is in the form of the copy of the "Auto-Reply Facsimile Transmission" which bears a date of 28 September 2005 and which itemizes an "Executed Combined Declaration and Power of Attorney" and identifies the above-captioned application number and docket number. Further, practitioner states that the copy of the declaration filed 21 August 2006 is a copy of the declaration originally filed 28 September 2005. Therefore, in view of the "Auto-Reply Facsimile Transmission" and practitioner's statement, the declaration received on 21 August 2006 may properly be accepted as originally received in the USPTO on 28 September 2005. The NOTIFICATION OF ABANDONMENT mailed 21 July 2006 is hereby vacated.

Declaration of Inventors

The declaration of inventors filed 28 September 2005 is not in compliance with 37 CFR 1.69(b); specifically applicants have not used one of the pre-approved foreign language forms nor have applicants furnished the requisite statement attesting to the accuracy of the translation.

The surcharge under 37 CFR 1.492(h) for filing any of the search fee, the examination fee, or the oath or declaration after the date of the commencement of the national stage has been charged to Deposit Account 50-3478.

## CONCLUSION

For the reasons set forth above, the petition under 37 CFR 1.181 is **GRANTED**.

For the reasons set forth above, the NOTIFICATION OF ABANDONMENT mailed 21 July 2006 is VACATED.

Since the reply filed 28 September 2005 appears to have been bona fide, applicant is given a TIME PERIOD of ONE (1) MONTH or THIRTY (30) DAYS from the mailing date of this notice, whichever is longer, within which to provide a pre-approved foreign language declaration in compliance with 37 CFR 1.497(a)-(b) or the requisite statement under 37 CFR 1.69(b) that the translation is accurate. Failure to timely file a proper reply will result in abandonment of the application.

Please direct further correspondence with respect to this matter to Mail Stop PCT, Commissioner for Patents, Office of PCT Legal Administration, P.O. Box 1450, Alexandria,

Virginia 22313-1450, with the contents of the letter marked to the attention of the Office of PCT Legal Administration.

Daniel Stemmer
Legal Examiner
PCT Legal Affairs
Office of Patent Cooperation Treaty
Legal Administration
Telephone: (571) 272-3301
Facsimile: (571) 273-0459

10/05/2006 SBASHEIR 00000003 503478 10526049
01 FC:1617 130.00 DA

UNITED STATES PATENT AND TRADEMARK OFFICE

Commissioner for Patents
United States Patent and Trademark Office
P.O. Box 1450
Alexandria, VA 22313-1450
www.uspto.gov

Browdy and Neimark, P.L.L.C.
624 Ninth Street N.W.
Suite 300
Washington, DC
20001-5303

COPY MAILED
MAR 11 2010

| | |
|---|---|
| In re Patent No. 7,482,436 | : |
| Sugimura et al. | : DECISION UPON REMAND AND |
| Issue Date: January 27, 2009 | : RECONSIDERATION OF |
| Application No. 10/526,072 | : PATENT TERM ADJUSTMENT |
| Filed: February 28, 2005 | : AND NOTICE OF INTENT |
| Attorney Docket No. Sugimura4 | : TO ISSUE CERTIFICATE OF |
| Title: Human Anti-Human | : CORRECTION |
| InterLeukin-6 Antibody and | : |
| Fragment of Antibody | |

This is a decision following remand from the District Court for the District of Columbia regarding the patent term adjustment indicated on the above-identified patent. The Court remanded this matter to the U.S. Patent and Trademark Office for recalculation of the patent term adjustment in accordance with the decision in Wyeth & Elan Pharma Int'l Ltd. v. Kappos, 591 F.3d 1364 (Fed. Cir. 2010).

The patent term adjustment indicated on the above-identified patent has been recalculated as directed by the Court. The term of the above-identified patent is extended or adjusted by seven hundred and sixty-one(761) days.

The application is being forwarded to the Certificates Branch for issuance of a certificate of correction indicating that the term of the above-identified patent is extended or adjusted by seven hundred and sixty-one (761) days.

Telephone inquiries specific to this matter should be directed to Senior Legal Advisor, Kery A. Fries at (571) 272-7757.

/Kery A. Fries/

Kery Fries
Senior Legal Advisor Attorney
Office of Patent Legal Administration
Office of Associate Commissioner
For Patent Examination Policy

Enclosure: Copy of DRAFT Certificate of Correction

UNITED STATES PATENT AND TRADEMARK OFFICE

# CERTIFICATE OF CORRECTION

PATENT : 7,482,436 B2

DATED : **January 27, 2009** **DRAFT**

INVENTOR(S) : Sugimura et al.

It is certified that error appears in the above-identified patent and that said Letters Patent is hereby corrected as shown below:

On the cover page,

[*] Notice: Subject to any disclaimer, the term of this patent is extended or adjusted under 35 USC 154(b) by 427 days

Delete the phrase "by 427 days" and insert – by 761 days--

Day : Wednesday

PALM INTRANET

Date: 3/10/2010
Time: 15:31:54

| PTA Calculations for Application: 10/526072 | | | |
|---|---|---|---|
| Application Filing Date: | 02/28/2005 | PTO Delay (PTO): | 427 |
| Issue Date of Patent: | 01/27/2009 | Three Years: | 0 |
| Pre-Issue Petitions: | 0 | Applicant Delay (APPL): | 0 |
| Post-Issue Petitions: | 0 | Total PTA (days): | 761 |
| PTO Delay Adjustment: | 334 | | |

**File Contents History**

| Number | Date | Contents Description | PTO | APPL | START |
|---|---|---|---|---|---|
| 72 | 03/10/2010 | ADJUSTMENT OF PTA CALCULATION BY PTO | 334 | | |
| 64.5 | 01/07/2009 | PTA 36 MONTHS | | | |
| 64 | 01/27/2009 | PATENT ISSUE DATE USED IN PTA CALCULATION | | | |
| 63 | 12/24/2008 | EXPORT TO FINAL DATA CAPTURE | | | |
| 62 | 12/23/2008 | DISPATCH TO FDC | | | |
| 61 | 12/22/2008 | APPLICATION IS CONSIDERED READY FOR ISSUE | | | |
| 60 | 12/19/2008 | ISSUE FEE PAYMENT VERIFIED | | | |
| 59 | 12/19/2008 | ISSUE FEE PAYMENT RECEIVED | | | |
| 58 | 10/24/2008 | FINISHED INITIAL DATA CAPTURE | | | |
| 57 | 10/03/2008 | SEQUENCE FORWARDED TO PUBS ON TAPE | | | |
| 56 | 09/26/2008 | EXPORT TO INITIAL DATA CAPTURE | | | |
| 54 | 09/22/2008 | MAIL NOTICE OF ALLOWANCE | | | |
| 53 | 09/17/2008 | ISSUE REVISION COMPLETED | | | |
| 52 | 09/15/2008 | ALLOWED CASE RETURNED TO THE EXAMINER FOR CLERICAL PROCESSING | | | |
| 51 | 09/15/2008 | DOCUMENT VERIFICATION | | | |
| 50 | 09/15/2008 | NOTICE OF ALLOWANCE DATA VERIFICATION COMPLETED | | | |
| 49 | 09/07/2008 | EXAMINER INTERVIEW SUMMARY RECORD (PTOL - 413) | | | |
| 48 | 09/15/2008 | EXAMINER'S AMENDMENT COMMUNICATION | | | |
| 47 | 09/15/2008 | NOTICE OF ALLOWABILITY | | | |
| 43 | 08/16/2008 | DATE FORWARDED TO EXAMINER | | | |
| 42 | 08/06/2008 | AMENDMENT AFTER FINAL REJECTION | | | |
| 41 | 05/08/2008 | MAIL FINAL REJECTION (PTOL - 326) | | | |

| | | | | | |
|---|---|---|---|---|---|
| 40 | 05/07/2008 | FINAL REJECTION | | | |
| 38 | 02/28/2008 | DATE FORWARDED TO EXAMINER | | | |
| 37 | 01/17/2008 | RESPONSE AFTER NON-FINAL ACTION | | | |
| 36 | 10/17/2007 | MAIL NON-FINAL REJECTION | | | |
| 35 | 10/11/2007 | NON-FINAL REJECTION | | | |
| 34 | 05/27/2005 | INFORMATION DISCLOSURE STATEMENT CONSIDERED | | | |
| 31 | 03/24/2006 | INFORMATION DISCLOSURE STATEMENT CONSIDERED | | | |
| 30 | 07/31/2007 | DATE FORWARDED TO EXAMINER | | | |
| 29 | 07/27/2007 | RESPONSE TO ELECTION / RESTRICTION FILED | | | |
| 28 | 06/29/2007 | MAIL RESTRICTION REQUIREMENT | 427 | | -1 |
| 27 | 06/25/2007 | REQUIREMENT FOR RESTRICTION / ELECTION | | | |
| 26 | 08/27/2006 | IFW TSS PROCESSING BY TECH CENTER COMPLETE | | | |
| 25.7 | 03/24/2006 | INFORMATION DISCLOSURE STATEMENT (IDS) FILED | | | |
| 25 | 03/24/2006 | INFORMATION DISCLOSURE STATEMENT (IDS) FILED | | | |
| 24 | 06/23/2005 | PRELIMINARY AMENDMENT | | | |
| 23.7 | 05/27/2005 | INFORMATION DISCLOSURE STATEMENT (IDS) FILED | | | |
| 23 | 05/27/2005 | INFORMATION DISCLOSURE STATEMENT (IDS) FILED | | | |
| 22 | 08/27/2006 | CASE DOCKETED TO EXAMINER IN GAU | | | |
| 21 | 02/28/2005 | 371 COMPLETION DATE | | | |
| 20 | 07/21/2006 | APPLICATION DISPATCHED FROM OIPE | | | |
| 19 | 07/21/2006 | NOTICE OF DO/EO ACCEPTANCE MAILED | | | |
| 18 | 09/01/2005 | ADDITIONAL APPLICATION FILING FEES | | | |
| 14 | 03/24/2006 | INFORMATION DISCLOSURE STATEMENTS | | | |
| 13 | 09/01/2005 | A SET OF SYMBOLS AND PROCEDURES, PROVIDED TO THE PTO ON A SET OF COMPUTER LISTINGS, THAT DESCRIBE IN | | | |
| 12 | 09/01/2005 | CRF DISK HAS BEEN RECEIVED BY PREEXAM / GROUP / PCT | | | |
| 11 | 07/11/2006 | CLEARED BY OIPE CSR | | | |
| 10 | 07/11/2006 | CLEARED BY OIPE CSR | | | |
| 9 | 07/11/2006 | CLEARED BY OIPE CSR | | | |
| 8 | 07/11/2006 | CLEARED BY OIPE CSR | | | |
| 7 | 07/11/2006 | CLEARED BY OIPE CSR | | | |

| | | | | | |
|---|---|---|---|---|---|
| 6 | 07/11/2006 | CLEARED BY OIPE CSR | | | |
| 5 | 07/11/2006 | CLEARED BY OIPE CSR | | | |
| 4 | 01/31/2006 | CRF IS GOOD TECHNICALLY / ENTERED INTO DATABASE | | | |
| 3 | 07/08/2005 | SEQUENCE DISCLOSURE PROBLEMS | | | |
| 1 | 02/28/2005 | INITIAL EXAM TEAM NN | | | |

**Search Another: Application#** Search

**EXPLANATION OF PTA CALCULATION**

**EXPLANATION OF PTE CALCULATION**

To go back, right click here and select Back. To go forward, right click here and select Forward. To refresh, right click here and select Refresh.

Back to OASIS | Home page

UNITED STATES PATENT AND TRADEMARK OFFICE

Commissioner for Patents
United States Patent and Trademark Office
P.O. Box 1450
Alexandria, VA 22313-1450
www.uspto.gov

PAULA BORDEN
BOZICEVIC FIELD & FRANCIS, LLP
1900 UNIVERSITY AVENUE, SUITE 200
EAST PALO ALTO, CA 94303

**COPY MAILED**

AUG 16 2006

**OFFICE OF PETITIONS**

| | | |
|---|---|---|
| In re Application of | : | |
| Henry H. Hsu | : | |
| Application No. 10/526,087 | : | DECISION ON PETITION |
| Filed: September 14, 2005 | : | TO WITHDRAW |
| Attorney Docket No. 30481/30002A | : | FROM RECORD |
| | : | |

This is a decision on the Request to Withdraw as attorney or agent of record under 37 C.F.R. § 1.36(b), filed April 4, 2006.

The request is **NOT APPROVED** as moot.

A review of the file record indicates that the power of attorney to Paula Borden has been revoked by the assignee of the patent application. Accordingly, the request to withdraw under 37 C.F.R. § 1.36(b) is moot.

The correspondence address of record remains unchanged, which is the address indicated below.

Telephone inquires concerning this decision should be directed to Irvin Dingle at 571-272- 3210.

Amelia Au
Petitions Examiner
Office of Petitions

cc: Marshall, Gerstein & Borun LLP
233 S. Wacker Drive, Suite 6300
Sears Tower
Chicago, IL 60606

UNITED STATES PATENT AND TRADEMARK OFFICE

Commissioner for Patents
United States Patent and Trademark Office
P.O. Box 1450
Alexandria, VA 22313-1450
www.uspto.gov

**HOFFMAN WARNICK LLC**
**75 STATE STREET**
**14TH FLOOR**
**ALBANY NY 12207**

COPY MAILED

OCT 13 2009

OFFICE OF PETITIONS

| | | |
|---|---|---|
| In re Application of | : | |
| George B. Stefano, et al. | : | |
| Application No. 10/526,091 | : | ON PETITION |
| Filed: August 15, 2005 | : | |
| Attorney Docket No. R1381-200US | : | |

This is a decision on the petition under the unintentional provisions of 37 CFR 1.137(b), filed April 15, 2009, to revive the above-identified application.

The petition is **DISMISSED**.

Any request for reconsideration of this decision must be submitted within TWO (2) MONTHS from the mail date of this decision. Extensions of time under 37 CFR 1.136(a) are permitted. The reconsideration request should include a cover letter entitled "Renewed Petition under 37 CFR 1.137(b)." This is **not** a final agency action within the meaning of 5 U.S.C. § 704.

The application became abandoned for failure to timely reply within the meaning of 37 CFR 1.113 to the final Office action, mailed October 6, 2008, which set a shortened statutory period for reply of three (3) months. No extensions of time under the provisions of 37 CFR 1.136(a) was obtained. Accordingly, the application became abandoned on January 7, 2008. The Notice of Abandonment was mailed June 24, 2009.

A grantable petition under 37 CFR 1.137(b) must be accompanied by: (1) the required reply, unless previously filed; (2) the petition fee as set forth in 37 CFR 1.17(m); (3) a statement that the entire delay in filing the required reply from the due date for the reply until the filing of a grantable petition pursuant to 37 CFR 1.137(b) was unintentional; and (4) any terminal disclaimer (and fee as set forth in 37 CFR 1.20(d)) required by 37 CFR 1.137(d). Where there is a question as to whether either the abandonment or the delay in filing a petition under 37 CFR 1.137 was unintentional, the Director may require additional information. See MPEP 711.03(c)(II)(C) and (D). The instant petition lacks item(s) (1).

The proposed reply required for consideration of a petition to revive must be a Notice of Appeal (and appeal fee required by 37 CFR 41.20(b)(2), an amendment that prima facie places the application in condition for allowance, a Request for Continued Examination and submission (37 CFR 1.114), or the filing of a continuing application under 37 CFR 1.53(b). See MPEP 711.03(c)(III)(A)(2). The amendment filed herewith petition ***does not*** prima facie place the application in condition for allowance.

Further correspondence with respect to this matter should be addressed as follows:

By Mail: Mail Stop PETITION
Commissioner for Patents
P. O. Box 1450
Alexandria, VA 22313-1450

By hand: U. S. Patent and Trademark Office
Customer Service Window, Mail Stop Petitions
Randolph Building
401 Dulany Street
Alexandria, VA 22314

The centralized facsimile number is **(571) 273-8300.**

Telephone inquiries concerning this decision should be directed to the undersigned at (571) 272-2991.

Terri Johnson
Petitions Examiner
Office of Petitions

Enclosed: Examiner's Advisory Action PTOL-303

| Advisory Action Before the Filing of an Appeal Brief | Application No. 10/526,091 | Applicant(s) STEFANO ET AL. | |
|---|---|---|---|
| | Examiner Randall Winston | Art Unit 1655 | |

***--The MAILING DATE of this communication appears on the cover sheet with the correspondence address --***

THE REPLY FILED 30 December 2008 FAILS TO PLACE THIS APPLICATION IN CONDITION FOR ALLOWANCE.

1. ☒ The reply was filed after a final rejection, but prior to or on the same day as filing a Notice of Appeal. To avoid abandonment of this application, applicant must timely file one of the following replies: (1) an amendment, affidavit, or other evidence, which places the application in condition for allowance; (2) a Notice of Appeal (with appeal fee) in compliance with 37 CFR 41.31; or (3) a Request for Continued Examination (RCE) in compliance with 37 CFR 1.114. The reply must be filed within one of the following time periods:
   a) ☒ The period for reply expires 3 months from the mailing date of the final rejection.
   b) ☐ The period for reply expires on: (1) the mailing date of this Advisory Action, or (2) the date set forth in the final rejection, whichever is later. In no event, however, will the statutory period for reply expire later than SIX MONTHS from the mailing date of the final rejection.
   Examiner Note: If box 1 is checked, check either box (a) or (b). ONLY CHECK BOX (b) WHEN THE FIRST REPLY WAS FILED WITHIN TWO MONTHS OF THE FINAL REJECTION. See MPEP 706.07(f).

Extensions of time may be obtained under 37 CFR 1.136(a). The date on which the petition under 37 CFR 1.136(a) and the appropriate extension fee have been filed is the date for purposes of determining the period of extension and the corresponding amount of the fee. The appropriate extension fee under 37 CFR 1.17(a) is calculated from: (1) the expiration date of the shortened statutory period for reply originally set in the final Office action; or (2) as set forth in (b) above, if checked. Any reply received by the Office later than three months after the mailing date of the final rejection, even if timely filed, may reduce any earned patent term adjustment. See 37 CFR 1.704(b).

NOTICE OF APPEAL

2. ☐ The Notice of Appeal was filed on _____. A brief in compliance with 37 CFR 41.37 must be filed within two months of the date of filing the Notice of Appeal (37 CFR 41.37(a)), or any extension thereof (37 CFR 41.37(e)), to avoid dismissal of the appeal. Since a Notice of Appeal has been filed, any reply must be filed within the time period set forth in 37 CFR 41.37(a).

AMENDMENTS

3. ☐ The proposed amendment(s) filed after a final rejection, but prior to the date of filing a brief, will not be entered because
   (a) ☐ They raise new issues that would require further consideration and/or search (see NOTE below);
   (b) ☐ They raise the issue of new matter (see NOTE below);
   (c) ☐ They are not deemed to place the application in better form for appeal by materially reducing or simplifying the issues for appeal; and/or
   (d) ☐ They present additional claims without canceling a corresponding number of finally rejected claims.
   NOTE: _____. (See 37 CFR 1.116 and 41.33(a)).
4. ☐ The amendments are not in compliance with 37 CFR 1.121. See attached Notice of Non-Compliant Amendment (PTOL-324).
5. ☐ Applicant's reply has overcome the following rejection(s): _____.
6. ☐ Newly proposed or amended claim(s) _____ would be allowable if submitted in a separate, timely filed amendment canceling the non-allowable claim(s).
7. ☒ For purposes of appeal, the proposed amendment(s): a) ☐ will not be entered, or b) ☒ will be entered and an explanation of how the new or amended claims would be rejected is provided below or appended.
   The status of the claim(s) is (or will be) as follows:
   Claim(s) allowed: _____.
   Claim(s) objected to: _____.
   Claim(s) rejected: *1-7 and 15-18*.
   Claim(s) withdrawn from consideration: _____.

AFFIDAVIT OR OTHER EVIDENCE

8. ☐ The affidavit or other evidence filed after a final action, but before or on the date of filing a Notice of Appeal will not be entered because applicant failed to provide a showing of good and sufficient reasons why the affidavit or other evidence is necessary and was not earlier presented. See 37 CFR 1.116(e).
9. ☐ The affidavit or other evidence filed after the date of filing a Notice of Appeal, but prior to the date of filing a brief, will not be entered because the affidavit or other evidence failed to overcome all rejections under appeal and/or appellant fails to provide a showing a good and sufficient reasons why it is necessary and was not earlier presented. See 37 CFR 41.33(d)(1).
10. ☐ The affidavit or other evidence is entered. An explanation of the status of the claims after entry is below or attached.

REQUEST FOR RECONSIDERATION/OTHER

11. ☒ The request for reconsideration has been considered but does NOT place the application in condition for allowance because: See Continuation Sheet.
12. ☐ Note the attached Information *Disclosure Statement*(s). (PTO/SB/08) Paper No(s). _____
13. ☐ Other: _____.

/Christopher R. Tate/
Primary Examiner, Art Unit 1655

Continuation of 11. does NOT place the application in condition for allowance because: Applicant's argument concerning the rejections of record has been carefully considered but it is not deemed persuasive. Although Applicant argues that claim 1 recites the claimed compositon as "stimulating nitric oxide production, Applicant argument is not found persuasive for the reason of record- i.e., the intended use of the above composition does not patentably distinguish the composition, per se, since such undisclosed use is inherent in the reference composition. In order to be limiting, the intended use must create a structural difference between the claimed composition and the prior art compostion. In the instant case, the intended use does not create a structural difference, thus the intended use is not limiting (see, e.g. MPEP 2112). Thus, claims 1-7 and 15-18 still stand rejected under 35 USC 102/103 for the same reasons set forth in examiner's final rejection on 10/06/2008.

UNITED STATES PATENT AND TRADEMARK OFFICE

Commissioner for Patents
United States Patent and Trademark Office
P.O. Box 1450
Alexandria, VA 22313-1450
www.uspto.gov

COPY MAILED

NOV 13 2009

OFFICE OF PETITIONS

**HOFFMAN WARNICK LLC**
**75 STATE STREET**
**14TH FLOOR**
**ALBANY NY 12207**

| | | |
|---|---|---|
| In re Application of | : | |
| George B. Stefano, et al. | : | |
| Application No. 10/526,091 | : | ON PETITION |
| Filed: August 15, 2005 | : | |
| Attorney Docket No. R1381-200US | : | |

This is a decision on the renewed petition under the unintentional provisions of 37 CFR 1.137(b), filed October 27, 2009, to revive the above-identified application.

The petition is **GRANTED**.

The application became abandoned for failure to timely file a reply within the meaning of 37 CFR 1.113 to the final Office action of October 6, 2008. The proposed reply required for consideration of a petition to revive must be a Notice of Appeal (and appeal fee required by 37 CFR 41.20(b)(2), an amendment that *prima facie* places the application in condition for allowance, a Request for Continued Examination and submission (37 CFR 1.114), or the filing of a continuing application under 37 CFR 1.53(b). See MPEP 711.03(c)(III)(A)(2). No extensions of time pursuant to the provisions of 37 CFR 1.136(a) was obtained. Accordingly, the date of abandonment of this application is January 7, 2008. The Notice of Abandonment was mailed June 24, 2009.

The petition satisfies the requirements of 37 CFR 1.137(b) in that petitioner has supplied (1) the reply in the form of a Request for Continued Examination (RCE) and fee of $405, and the submission required by 37 CFR 1.114; (2) the petition fee of $810; and (3) a proper statement of unintentional delay.

Telephone inquiries concerning this decision should be directed to the undersigned at (571) 272-2991.

This application is being referred to Technology Center AU 1655 for processing of the RCE and for appropriate action by the Examiner in the normal course of business on the amendment submitted in accordance with 37 CFR 1.114.

Terri Johnson

Terri Johnson
Petitions Examiner
Office of Petitions

07 SEP 2005

#4

UNITED STATES PATENT AND TRADEMARK OFFICE

Commissioner for Patents
United States Patent and Trademark Office
P.O. Box 1450
Alexandria, VA 22313-1450
www.uspto.gov

VEBB ZIESENHEIM LOGSDON ORKIN & HANSON, P.C.
36 Seventh Avenue
00 Koppers Building
ittsburgh, PA 15219-1818

| | | |
|---|---|---|
| In re Application of: | : | |
| GUROSIK, John, O., et al. | : | DECISION ON PETITION FOR |
| U.S. Application No.: 10/526,094 | : | REVIVAL OF ABANDONED |
| PCT No.: PCT/US02/24718 | : | APPLICATION UNDER |
| International Filing Date: 01 August 2002 | : | 37 CFR 1.137(b) |
| Priority Date: 01 August 2001 | : | |
| Attorney's Docket No.: 3961-040482 | : | |
| For: TREE HARVESTER ASSEMBLY | : | |

The petition for revival under 37 CFR 1.137(b) filed 24 February 2005 in the above-captioned application is hereby **GRANTED** as follows:

Applicants' statement that "the entire delay in entering the national phase of this application until the filing of a grantable petition pursuant to 37 CFR 1.137(b) was unintentional" is construed as the statement required under 37 CFR 1.137(b)(3), that is, a statement that "the entire delay in filing the required reply from the due date for the required reply until the filing of a grantable petition under 37 CFR 1.137(b) was unintentional." If this is not a proper interpretation of applicants' statement, applicants **must** inform this Office immediately. Based on the above, the requirement of 37 CFR 1.137(b)(3) is considered satisfied.

Applicants have submitted the small entity basic national fee petition fee, and the requirements of 37 CFR 1.137(b) have been satisfied. Therefore, the request to revive the application is granted as to the national stage in the United States of America. It is noted that the petition was accompanied by an executed declaration in compliance with 37 CFR 1.497.

This application is being returned to the National Stage Processing Division of the Office of PCT Operations for further processing in accordance with this decision. The date under 35 U.S.C. 371(c)(1), (c)(2), and (c)(4) is 24 February 2005.

Richard M. Ross
PCT Petitions Attorney
Office Of PCT Legal Administration
Telephone: (571) 272-3296
Facsimile: (571) 273-0459

UNITED STATES PATENT AND TRADEMARK OFFICE

Commissioner for Patents
United States Patent and Trademark Office
P.O. Box 1450
Alexandria, VA 22313-1450
www.uspto.gov

**THE WEBB LAW FIRM, P.C.**
**700 KOPPERS BUILDING**
**436 SEVENTH AVENUE**
**PITTSBURGH PA 15219**

COPY MAILED

SEP 05 2008

OFFICE OF PETITIONS

| | | |
|---|---|---|
| In re Application of | : | |
| John O. Gurosik, et al. | : | |
| Application No. 10/526,094 | : | ON PETITION |
| Filed: February 24, 2005 | : | |
| Attorney Docket No. 3961-040482 | : | |

This is a decision on the petition under 37 CFR 1.137(b), filed October 31, 2007, to revive the above-identified application.

The petition is **DISMISSED**.

Any request for reconsideration of this decision must be submitted within TWO (2) MONTHS from the mail date of this decision. Extensions of time under 37 CFR 1.136(a) are permitted. The reconsideration request should include a cover letter entitled "Renewed Petition under 37 CFR 1.137(b)." This is **not** a final agency action within the meaning of 5 U.S.C. § 704.

The application became abandoned for failure to reply in a timely manner to the non-final Office action mailed, April 27, 2006, which set a shortened statutory period for reply of three (3) months. No extensions of time under the provisions of 37 CFR 1.136(a) were obtained. Accordingly, the application became abandoned on July 28, 2006. The Notice of Abandonment was mailed November 17, 2006.

A grantable petition under 37 CFR 1.137(b) must be accompanied by: (1) the required reply, unless previously filed; (2) the petition fee as set forth in 37 CFR 1.17(m); (3) a statement that the entire delay in filing the required reply from the due date for the reply until the filing of a grantable petition pursuant to 37 CFR 1.137(b) was unintentional; and (4) any terminal disclaimer (and fee as set forth in 37 CFR 1.20(d)) required by 37 CFR 1.137(d). Where there is a question as to whether either the abandonment or the delay in filing a petition under 37 CFR 1.137 was unintentional, the Commissioner may require additional information. See MPEP 711.03(c)(III)(C) and (D). The instant petition lacks item(s) (1), (2) & (3).

Item 1:
There is was no reply to the Office action mailed April 27, 2006 filed herewith petition or previously filed.

Item 2:
The petition fee as set forth in 37 CFR 1.17(m) is $770 in which $750 was received and therefore $20 is still owed for the completion of the filing fee for petition.

Item 3:

The statement of delay is not acceptable. In this regard, petitioner's attention is directed to 37 CFR 1.33(b), which states.

(b) Amendments and other papers. Amendments and other papers, except for written assertions pursuant to § 1.27(c)(2)(ii) of this part, filed in the application must be signed by:
(1) A registered patent attorney or patent agent of record appointed in compliance with § 1.32(b);
(2) A registered patent attorney or patent agent not of record who acts in a representative capacity under the provisions of § 1.34;
(3) An assignee as provided for under §3.71(b) of this chapter; or
(4) All of the applicants (§ 1.41(b)) for patent, unless there is an assignee of the entire interest and such assignee has taken action in the application in accordance with § 3.71 of this chapter.

An unsigned amendment (or other paper) or one not properly signed by a person having authority to prosecute the application is not entered. This applies, for instance, where the amendment (or other paper) is signed by only one of two applicants and the one signing has not been given a power of attorney by the other applicant.

Therefore, as the petition is not signed by all the inventors and the record herein fails to disclose that petitioner herein (John O. Gurosik) was ever given a power of attorney to act on behalf of inventor Joseph C. Largey, or that he is an assignee of the entire interest and has complied with the provisions of 37 CFR 3.73(b), the petition is considered to not contain a proper statement of [unintentional] delay.

**Note:** The change of correspondence address that was filed herewith petition was not accepted because it was not signed by both inventors. While a courtesy copy of this decision is being mailed to the person signing the petition, all future correspondence will be directed to the address currently of record until a properly signed change of correspondence address is received.

Further correspondence with respect to this matter should be addressed as follows:

By Mail: Mail Stop PETITION
Commissioner for Patents
P. O. Box 1450
Alexandria, VA 22313-1450

By hand: U. S. Patent and Trademark Office
Customer Service Window, Mail Stop Petitions
Randolph Building
401 Dulany Street
Alexandria, VA 22314

The centralized facsimile number is **(571) 273-8300.**

Telephone inquiries concerning this decision should be directed to Terri Williams at (571) 272-2991.

Chris Bottorff
Petitions Examiner
Office of Petitions

cc: **JOHN O. GUROSIK**
**800 BRANDY CAMP ROAD**
**KERSEY, PA 15846**

UNITED STATES PATENT AND TRADEMARK OFFICE

Commissioner for Patents
United States Patent and Trademark Office
P.O. Box 1450
Alexandria, VA 22313-1450
www.uspto.gov

MAILED

NOV 16 2009

OFFICE OF PETITIONS

**John O. Gurosik**
**800 Brandy Camp Road**
**Kersey PA 15846**

In re Application of
John O. Gurosik et al.
Application No. 10/526,094
Filed: February 24, 2005
Attorney Docket No. 3961-040482

ON PETITION

This is in response to the communication, filed July 8, 2009, to revive the above-identified application, which is being treated as a petition to withdraw the holding of abandonment.

The petition is **DISMISSED**.

Any request for reconsideration of this decision should be submitted within two (2) months from the mail date of this decision and be entitled "Renewed Petition to Withdraw the Holding of Abandonment under 37 CFR 1.181." *See* 37 CFR 1.181(f).

On April 27, 2006, the Office mailed a non-final Office action, which set a three month shortened statutory period to reply. The application became abandoned on July 28, 2006, for failure to submit a timely response to the non-final Office action. On November 17, 2006, the Office mailed a Notice of Abandonment.

The petition has the typed name of John O. Gurosik at the bottom but Gurosik did not sign the petition. Further, Joseph C. Largey is listed as a co-inventor. Since Largey has not given power of attorney to Gurosik, both co-inventors need to sign the petition.

Petitioner may wish to consider hiring a registered patent attorney or agent to assist in the prosecution of this application. Additionally, petitioner is encouraged to contact the Inventors Assistance Center (IAC) by telephone at 800-786-9199 or 571-272-1000, Monday through Friday from 8:30 AM to 5:30 PM (EST). The IAC provides patent information and services to the public and is staffed by former Supervisory Patent Examiners and experienced Primary Examiners who answer general questions concerning patent examining policy and procedure.

Further correspondence with respect to this matter should be addressed as follows:

By mail: Mail Stop Petition
Commissioner for Patents
P.O. Box 1450
Alexandria, VA 22313-1450

By FAX: (571) 273-8300
Attn: Office of Petitions

By hand: Customer Service Window
Randolph Building
401 Dulany Street
Alexandria, VA 22314

Telephone inquiries related to this decision may be directed to the undersigned at (571) 272-6842.

Carl Friedman
Petitions Examiner
Office of Petitions

UNITED STATES PATENT AND TRADEMARK OFFICE

Commissioner for Patents
United States Patent and Trademark Office
P.O. Box 1450
Alexandria, VA 22313-1450
www.uspto.gov

Fildes & Outland
Suite 2
20916 Mack Avenue
Grosse Pointe Woods, MI 48236

COPY MAILED
DEC 1 8 2006
OFFICE OF PETITIONS

In re Application of Ketonen :
Application No. 10/526,101 : Decision on Petition
Filing Date: February 24, 2005 :
Attorney Docket No. 11001.147 :

This is a decision on the petition under 37 CFR 1.137(b), filed September 25, 2006, to revive the above-identified application.

The petition is **granted**.

The above-identified application became abandoned for failure to submit the issue fee and publication fee in a timely manner in reply to the Notice of Allowance mailed May 17, 2006, which set a statutory period for reply of three (3) months. Accordingly, the above-identified application became abandoned on August 18, 2006. A Notice of Abandonment was mailed on September 20, 2006.

The instant petition requests revival of the application.

Petitioner has met the requirements to revive the above-identified application pursuant to 37 CFR 1.137(b). Therefore, the petition is granted and the application is revived.

The Office of Publications will be informed of the instant decision and will take steps to issue the application as a patent in due course.

Telephone inquiries regarding this communication should be directed to Petitions Attorney Steven Brantley at (571) 272-3203.

Charles Steven Brantley
Senior Petitions Attorney
Office of Petitions

UNITED STATES PATENT AND TRADEMARK OFFICE

Commissioner for Patents
United States Patent and Trademark Office
P.O. Box 1450
Alexandria, VA 22313-1450
www.uspto.gov

NOVARTIS VACCINES AND DIAGNOSTICS INC.
INTELLECTUAL PROPERTY- X100B
P.O. BOX 8097
Emeryville CA 94662-8097

MAILED

JUN 14 2010

OFFICE OF PETITIONS

In re Application of Giannozzi et. al. :
Application No. 10/526,124 :
Filing Date: October 16, 2006 :
Attorney Docket No. PAT051721-US-PCT :

Decision on Petition

This is a decision on the petition under 37 CFR 1.137(b), filed March 8, 2010, to revive the application.

The petition is **granted**.

The application became abandoned for failure to reply in a proper manner to the final Office action issued September 4, 2009, which set a shortened statutory period for reply of three (3) months. An extension of time under the provisions of 37 CFR 1.136(a) was not obtained. Accordingly, the application became abandoned on December 5, 2009.

The instant petition requests revival of the application.

A grantable petition under 37 CFR 1.137(b) must be accompanied by:

(1) The reply required to the outstanding Office action or notice, unless previously filed,
(2) The petition fee,
(3) A statement that the entire delay in filing the required reply from the due date for the reply until the filing of a grantable petition pursuant to 37 CFR 1.137(b) was unintentional, and
(4) A terminal disclaimer and fee if the application was filed on or before June 8, 1995 or if the application is a design application.

Petitioner has submitted a reply to the final Office action in the form of a request for continued examination. Petitioner has submitted the required petition fee of $1620. Petitioner has stated the entire delay in filing the required reply from the due date for the reply until the filing of a grantable petition pursuant to 37 CFR 1.137(b) was unintentional.

The Petitioner has met the requirements to revive the above-identified application pursuant to 37 CFR 1.137(b). Therefore, the petition is granted and the application is revived.

The petition was accompanied by a payment of $1110 for a three (3) month extension of time. Payment for extension of time is not required when reviving an application and has been credited back to deposit account 03-1664.

Technology Center Art Unit 1623 will be informed of the instant decision and the application will be further examined in due course.

Telephone inquiries regarding this communication should be directed to Steven Brantley at (571) 272-3203 or in his absence to Amy Gandhi at (571) 272-6699.

Charles Steven Brantley
Senior Petitions Attorney
Office of Petitions

UNITED STATES PATENT AND TRADEMARK OFFICE

Commissioner for Patents
United States Patent and Trademark Office
P.O. Box 1450
Alexandria, VA 22313-1450
www.uspto.gov

27 JUL 2006

Dean H. Nakamura
Bell, Boyd & Lloyd, LLC
P.O. Box 1135
Chicago, Illinois 60690-1135

| | | |
|---|---|---|
| In re Application of | : | |
| CAMPOCHIARO, et al. | : | |
| Application No.: 10/526,127 | : | DECISION ON PETITION |
| PCT No.: PCT/EP03/09497 | : | |
| Int. Filing Date: 27 August 2003 | : | UNDER 37 CFR 1.181 |
| Priority Date: 28 August 2002 | : | |
| Attorney Docket No.: 116566-002 | : | |
| For: OCULAR GENE THERAPY | : | |

This decision is in response to applicant's petition to withdraw the holding of abandonment filed 30 May 2006 in the United States Patent and Trademark Office (USPTO).

## BACKGROUND

On 27 August 2003, applicant filed international application PCT/EP03/09497, which claimed priority of an earlier application filed 28 August 2002. A copy of the international application was communicated to the United States Patent and Trademark Office from the International Bureau on 11 March 2004. Pursuant to 37 CFR 1.485, the deadline for payment of the basic national fee in the United States was to expire 30 months from the priority date, 28 February 2005.

On 28 February 2005, applicant filed a transmittal letter for entry into the national stage in the United States, which was accompanied by, inter alia: the requisite basic national fee as required by 35 U.S.C. 371(c)(1).

On 23 December 2005, applicant was mailed a NOTIFICATION OF MISSING REQUIREMENTS UNDER 35 U.S.C. 371 (Form PCT/DO/EO/905) informing applicant of the need to provide an executed oath or declaration of the inventors, in compliance with 37 CFR 1.497(a) and (b), identifying the application by the International Application number and international filing date. In addition, applicant was advised of the need to furnish a computer readable version of the sequence listing. Applicant was given two months to respond and advised that this time period could be extended with a proper petition and payment of fees.

On 17 April 2006, applicant was mailed a NOTIFICATION OF ABANDONMENT (Form PCT/DO/EO/909) informing applicant that applicant had failed to respond to the NOTIFICATION OF MISSING REQUIREMENTS (Form PCT/DO/EO/905) mailed 23

December 2005 within the time period set therein and that above-identified application was abandoned as to the United States.

On 30 May 2006, applicant filed the present petition to withdraw the holding of abandonment.

## DISCUSSION

The best evidence of what was actually received by the Office is a postcard receipt containing a specific itemization of all the items being submitted. See MPEP 503. Here, applicant has provided a copy of the date-stamped postcard receipt. The postcard identifies the application by applicant, title and docket number. Among the items listed on the receipt are "3. Petition for Extension of Time, 4. Declaration and Power of Attorney (4 pages), 5. Computer-readable form of sequence listing, 7. Paper copy of sequence listing." The receipt is stamped "IAP3 Rec'd PCT/PTO 27 MAR 2006." Thus, it is clear that applicant filed an executed declaration and sequence listing on 27 Mar 2006 accompanied by a petition for a one-month extension of time. However, it is not possible to grant applicant's petition at this time as it does not appear that applicant has presently included a replacement diskette containing the computer-readable form of the sequence listing. Without a report from the Scientific and Technical Information Center (STIC) indicating that the furnished computer readable format of the sequence listing did not contain any errors it is not possible to grant the petition to withdraw.

It is noted that an examination of the combined declaration and power of attorney filed 30 May 2006 finds that the document does not comply with 37 CFR 1.497(a)-(b). The Manual of Patent Examination Procedure (MPEP) states at section 201.03: "An oath or declaration under 37 CFR 1.63 by each actual inventor must be presented. While each inventor need not execute the same oath or declaration, each oath or declaration executed by an inventor must contain a complete listing of all inventors so as to clearly indicate what each inventor believes to be the appropriate inventive entity. Where individual declarations are executed, they must be submitted as individual declarations rather than combined into one declaration." The filed declaration contains two signature pages "Page 3 of 3" listing and signed individually by inventors Campochiaro and Kaleko. It appears that the filed declaration was assembled from numerous declarations or the inventors only returned the signature pages, either alternative renders he declaration non-compliant.

## CONCLUSION

For the reasons detailed above, applicant's petition under 37 CFR 1.181 is **DISMISSED**.

This application remains **ABANDONED**.

Any reconsideration on the merits of this petition must be filed within **TWO (2) MONTHS** from the mail date of this decision. Any reconsideration request should include a

cover letter entitled "Renewed Petition Under 37 CFR 1.181." Extensions of time may be obtained under 37 CFR 1.136(a).

Any further correspondence with respect to this matter should be directed to Mail Stop PCT, Commissioner for Patents, Office of PCT Legal Administration, P.O. Box 1450, Alexandria, Virginia 22313-1450, with the contents of the letter marked to the attention of the Office of PCT Legal Administration.

Derek A. Putonen
Attorney Advisor
Office of PCT Legal Administration
Tel: (571) 272-3294
Fax: (571) 273-0459

#9

UNITED STATES PATENT AND TRADEMARK OFFICE

Commissioner for Patents
United States Patent and Trademark Office
P.O. Box 1450
Alexandria, VA 22313-1450
www.uspto.gov

28 SEP 2006

Dean H. Nakamura
Bell, Boyd & Lloyd, LLC
P.O. Box 1135
Chicago, Illinois 60690-1135

| | | |
|---|---|---|
| In re Application of | : | |
| CAMPOCHIARO, et al. | : | |
| U.S. Application No.: 10/526,127 | : | |
| PCT No.: PCT/EP03/09497 | : | DECISION ON RENEWED |
| Int. Filing Date: 27 August 2003 | : | |
| Priority Date: 28 August 2002 | : | PETITION UNDER |
| Attorney Docket No.:116566-002 | : | |
| For: OCULAR GENE THERAPY | : | 37 CFR 1.181 |

This decision is in response to applicant's "Renewed Petition Under 37 C.F.R. 1.181" filed 28 August 2006 in the United States Patent and Trademark Office (USPTO).

## BACKGROUND

On 27 July 2006, applicant was mailed a decision dismissing applicant's petition under 37 CFR 1.181 to withdraw the holding of abandonment in the present national stage application. Applicant was afforded two months to file any request for reconsideration.

On 28 August 2006, applicant filed the present petition under 37 CFR 1.181.

## DISCUSSION

Applicant has presently filed a replacement diskette containing the computer-readable format of the sequence listing and certified that it is a complete copy of the CRF filed on 23 March 2006. As such, applicant has satisfied the remaining item of concern from the decision mailed 27 July 2006 and it is proper to grant applicant's renewed petition at this time.

It is noted that applicant has yet to file a compliant oath or declaration of the inventors as detailed in the previous decision. Applicant states that the filed declaration "contains three pages, as noted on each page, the three pages come from the same document, 88330, and page 3 properly identifies both co-inventors on a single page." This statement is incorrect. As detailed in the decision mailed 27 July 2006, the filed declaration contained four total pages; not three; including two separate pages numbered "3." These pages were individually executed by the co-inventors and then combined into a single document rendering the filed declaration non-compliant.

## CONCLUSION

Applicant's renewed petition under 37 CFR 1.181 is **GRANTED**.

The "Notification of Abandonment" (Form PCT/DO/EO/909) mailed 17 April 2006 is hereby **VACATED**.

This application is being returned to the United States Designated/Elected Office (US/DO/EO) for the preparation and mailing of a "Notification of Defective Response" (Form PCT/DO/EO/916) indicating the need to file a compliant, executed oath or declaration of the inventors.

Derek A. Putonen
Attorney Advisor
Office of PCT Legal Administration
Tel: 571-272-3294
Fax: 571-273-0459

UNITED STATES PATENT AND TRADEMARK OFFICE

Commissioner for Patents
United States Patent and Trademark Office
P.O. Box 1450
Alexandria, VA 22313-1450
www.uspto.gov

28 NOV 2006

Perman & Green
425 Post Road
Fairfield, CT 06824

| | | |
|---|---|---|
| In re Application of | : | |
| SCHWARZ, Jochen | : | |
| Application No.: 10/526,130 | : | DECISION |
| PCT No.: PCT/EP02/09675 | : | |
| Int. Filing Date: 30 August 2002 | : | ON PETITION UNDER |
| Priority Date: None | : | |
| Docket No.: US20020409-3 | : | 37 CFR 1.137(b) |
| For: WAVELENGTH TUNABLE | : | |
| RESONATOR WITH A PRISM | : | |

Applicant's "Petition For Revival of an Application Abandoned Unintentionally Under 37 CFR 1.137(b)," filed in the above-captioned application on 29 September 2006 is **GRANTED**.

Applicant indicates that the entire delay in filing the required reply from the due date for the required reply until the filing of a grantable petition under 37 CFR 1.137(b) was unintentional, as required by 37 CFR 1.137(b)(3). The appropriate reply and petition fee have been submitted. A terminal disclaimer is not required as the application was filed on or after 08 June 1995. Accordingly, all requirements under 37 CFR 1.137(b) have been satisfied.

Applicant has supplied a declaration in compliance with 37 CFR 1.497(a)-(b). The fee for late furnishing of the search fee, examination fee or oath or declaration has been paid. The fee for a four month extension of time is not required and will be refunded to deposit account no. 16-1350, as authorized.

This application is being forwarded to the National Stage Processing Branch of the Office of PCT Operations for continued processing in accordance with this decision. The application has a date of 10 October 2006 under 35 U.S.C. §371(c)(1), (c)(2) and (c)(4).

Erin P. Thomson

Erin P. Thomson
Attorney Advisor
PCT Legal Administration

Telephone: 571-272-3292
Facsimile: 571-273-0459

UNITED STATES PATENT AND TRADEMARK OFFICE

UNITED STATES DEPARTMENT OF COMMERCE
United States Patent and Trademark Office
Address: COMMISSIONER FOR PATENTS
P.O. Box 1450
Alexandria, Virginia 22313-1450
www.uspto.gov

SCULLY SCOTT MURPHY & PRESSER, PC
400 GARDEN CITY PLAZA
SUITE 300
GARDEN CITY, NY 11530

Mail Date: 04/21/2010

| | | |
|---|---|---|
| **Applicant** | : Filippa Brugliera | : DECISION ON REQUEST FOR |
| **Patent Number** | : 7612257 | : RECALCULATION of PATENT |
| **Issue Date** | : 11/03/2009 | : TERM ADJUSTMENT IN VIEW |
| **Appliction No** | : 10/526,133 | : OF WYETH AND NOTICE OF INTENT TO |
| **Filed** | : 03/29/2006 | : ISSUE CERTIFICATE OF CORRECTION |
| | | : |

The Request for Recalculation is **GRANTED** to the extent indicated.

The patent term adjustment has been determined to be **696** days. The USPTO will *sua sponte* issue a certificate of correction reflecting the amount of PTA days determined by the recalculation.

Prior to the issuance of the certificate of correction, the USPTO will afford patentee an opportunity to be heard and request reconsideration. Accordingly, patentee has **one month or thirty (30) days**, whichever is longer, to file a request for reconsideration of this patent term adjustment calculation. See 35 U.S.C. 154(b)(3)(B)(ii) and 37 CFR 1.322(a)(4). No extensions of time will be granted under 37 CFR 1.136.

Patentee should use document code PET.OP if electronically filing a request for reconsideration of this patent term adjustment calculation. The patentee must also include the information required by 37 CFR 1.705(b)(2) and the fee required by 37 CFR 1.18(e). If patentee does not file a timely request for reconsideration of this patent term adjustment calculation including the information required by 37 CFR 1.705(b)(2) and the fee required by 37 CFR 1.18(e), the USPTO will issue a certificate of correction reflecting the PTA determination noted above.

Patentee should be aware that in order to preserve the right to review in the United States District Court for the District of Columbia of the USPTO patent term adjustment determination, patentee must ensure that he or she also take the steps required under 35 U.S.C. 154(b)(4)(A) in a timely manner. Nothing in the request for recalculation should be construed as providing an alternative time frame for commencing a civil action under 35 U.S.C. 154(b)(4)(A).

Any questions concerning this decision should be directed to the Office of Patent Legal Administration at 571-272-7702.

UNITED STATES PATENT AND TRADEMARK OFFICE

UNITED STATES DEPARTMENT OF COMMERCE
United States Patent and Trademark Office
Address: COMMISSIONER FOR PATENTS
P.O. Box 1450
Alexandria, Virginia 22313-1450
www.uspto.gov

WOOD, HERRON & EVANS, LLP (TOKYO ELECTRON)
2700 CAREW TOWER
441 VINE STREET
CINCINNATI, OH 45202

Mail Date: 04/20/2010

| | | |
|---|---|---|
| **Applicant** | : Sunil C. Shah | : DECISION ON REQUEST FOR |
| **Patent Number** | : 7649828 | : RECALCULATION of PATENT |
| **Issue Date** | : 01/19/2010 | : TERM ADJUSTMENT IN VIEW |
| **Appliction No** | : 10/526,145 | : OF WYETH AND NOTICE OF INTENT TO |
| **Filed** | : 10/14/2005 | : ISSUE CERTIFICATE OF CORRECTION |
| | | : |

The Request for Recalculation is **GRANTED** to the extent indicated.

The patent term adjustment has been determined to be **1101** days. The USPTO will *sua sponte* issue a certificate of correction reflecting the amount of PTA days determined by the recalculation.

Prior to the issuance of the certificate of correction, the USPTO will afford patentee an opportunity to be heard and request reconsideration. Accordingly, patentee has **one month or thirty (30) days**, whichever is longer, to file a request for reconsideration of this patent term adjustment calculation. See 35 U.S.C. 154(b)(3)(B)(ii) and 37 CFR 1.322(a)(4). No extensions of time will be granted under 37 CFR 1.136.

Patentee should use document code PET.OP if electronically filing a request for reconsideration of this patent term adjustment calculation. The patentee must also include the information required by 37 CFR 1.705(b)(2) and the fee required by 37 CFR 1.18(e). If patentee does not file a timely request for reconsideration of this patent term adjustment calculation including the information required by 37 CFR 1.705(b)(2) and the fee required by 37 CFR 1.18(e), the USPTO will issue a certificate of correction reflecting the PTA determination noted above.

Patentee should be aware that in order to preserve the right to review in the United States District Court for the District of Columbia of the USPTO patent term adjustment determination, patentee must ensure that he or she also take the steps required under 35 U.S.C. 154(b)(4)(A) in a timely manner. Nothing in the request for recalculation should be construed as providing an alternative time frame for commencing a civil action under 35 U.S.C. 154(b)(4)(A).

Any questions concerning this decision should be directed to the Office of Patent Legal Administration at 571-272-7702.

2 9 APR 2010

UNITED STATES PATENT AND TRADEMARK OFFICE

Commissioner for Patents
United States Patent and Trademark Office
P.O. Box 1450
Alexandria, VA 22313-1450
www.uspto.gov

Dinsmore & Shohl LLP
1400 PNC Plaza
500 West Jefferson Street
Louisville KY 40202

In re Application of RUDOLPH et al.
Application No.: 10/526,163
PCT No.: PCT/EP03/09694
Int. Filing: 01 September 2003
Priority Date: 30 August 2002
Attorney Docket No.: 22220 US-pd/c
For: METHOD FOR THE SYNTHESIS AND SELECTIVE BIOCATALYTIC MODIFICATION OF PEPTIDES, PEPTIDE MEMETICS AND PROTEINS

DECISION ON

PETITION TO REVIVE

UNDER 37 CFR 1.137(b)

This is a decision on applicant's petition to revive under 37 CFR 1.137(b) filed 15 December 2009 in the above-captioned application.

## BACKGROUND

On 01 December 2005, a Notification of Missing Requirements was mailed to applicant indicating, *inter alia*, that an oath or declaration, in compliance with 37 CFR 1.497(a) and (b), was required.

On 03 March 2008, a Notification of Defective Response was mailed to applicant indicating that the paper or computer disc copy of the "Sequence Listing" is not the same as the computer readable form of the "Sequence Listing" as required by 37 CFR 1.821(e). Applicant was advised to provide a substitute paper or compact disc copy of the "Sequence Listing" **as well as an amendment specifically directing its entry into the application** OR a substitute computer readable form (CFR) copy of the "Sequence Listing". These two items must be the same. Applicant must also provide a statement that the content of the sequence listing information recorded in compute readable form is identical to the written (on paper or compact disc) sequence listing and where applicable, includes no new matter, as required by 37 CFR 1.821.

On 14 July 2008, a Notification of Abandonment was mailed to applicant indicating that applicant failed to respond to the Notification of Missing Requirements within the time period set therein.

## DISCUSSION

Applicant's petition to revive was filed on 15 December 2009 along with a substitute computer readable form (CRF) copy of the "Sequence Listing". Applicant's statement that "the entire delay in filing the required reply from the due date for the reply until the filing of a grantable petition under 37 CFR 1.137(b) was unintentional" meets the requirements of 37 CFR 1.137(b). The petition fee was also submitted.

A review of the CFR on 5 January 2010 indicated that it is good technically and entered into the database. However, a statement that the content of the sequence listing information recorded in computer readable form is identical to the written sequence listing as required by 37 CFR 1.821(e),(f),(g), and 1.825 (b) & (d) is required and was not provided. The requirements of 37 CFR 1.137(b) have not been satisfied. Therefore, the request to revive the application abandoned under 35 U.S.C. 371(d) is dismissed as to the National stage in the United States of America.

## CONCLUSION

For the reasons discussed above, the renewed petition to revive under 37 CFR 1.137(b) is **DISMISSED WITHOUT PREJUDICE**. The application remains **ABANDONED**.

Any request for reconsideration on the merits of this decision must be filed within TWO (2) MONTHS from the mail date of this decision. Any reconsideration request should include a cover letter entitled "Renewed Petition Under 37 CFR 1.137(b)". No additional petition fee is required.

Any further correspondence with respect to this matter may be filed electronically via EFS-Web selecting the document description "Petition for review and processing by the PCT Legal Office" or by mail addressed to Mail Stop PCT, Commissioner for Patents, Office of PCT Legal Administration, P.O. Box 1450, Alexandria, Virginia 22313-1450, with the contents of the letter marked to the attention of the Office of PCT Legal Administration.

/Cynthia M. Kratz/
Cynthia M. Kratz
Attorney Advisor
Office of PCT Legal Administration
Telephone: 571-272-3286

UNITED STATES PATENT AND TRADEMARK OFFICE

Commissioner for Patents
United States Patent and Trademark Office
P.O. Box 1450
Alexandria, VA 22313-1450
www.uspto.gov

COPY MAILED

JUL 09 2007

OFFICE OF PETITIONS

**MORRISON & FOERSTER LLP**
**1650 TYSONS BOULEVARD**
**SUITE 400**
**MCLEAN VA 22102**

In re Application of

**KASTELEWICZ,** Georg
Application No. 10/526,186
Filed: March 02, 2005
Attorney Docket No. **449122079600**

DECISION ON PETITION TO WITHDRAW FROM RECORD

This is a decision on the Request to Withdraw as attorney or agent of record under 37 C.F.R. § 1.36(b), filed May 25, 2007.

The request is **APPROVED.**

A grantable request to withdraw as attorney/agent of record must be signed by every attorney/agent seeking to withdraw or contain a clear indication that one attorney is signing on behalf of another/others. A request to withdraw will not be approved unless at least 30 (thirty) days would remain between the date of approval and the later of the expiration date of a time to file a response or the expiration date of the maximum time period which can be extended under 37 C.F.R. § 1.136(a).

The request was signed by Deborah S. Gladstein on behalf of all attorneys of record who are associated. All attorneys/agents associated have been withdrawn. Applicant is reminded that there is no attorney of record at this time.

The request to change the correspondence of record is not acceptable as the requested correspondence address is not that of: (1) the first named signing inventor; or (2) an intervening assignee of the entire interest under 37 C.F.R 3.71. All future communications from the Office will be directed to the first named signing inventor at the first copied address below until otherwise properly notified by the applicant.

Telephone inquiries concerning this decision should be directed to Tredelle Jackson at 571-272-2783.

Monica A. Graves
Petitions Examiner
Office of Petitions

cc: **GEORG KASTELEWICZ**
**HOLZMARKTSTR. 75/1608**
**BERLIN, GERMANY 10179**

cc: **KEVIN SPIVAK, BELL BOYD & LLOYD LLC**
**70 WEST MADISON STREET**
**SUITE 3100**
**CHICAGO, IL 60602**

#3

UNITED STATES PATENT AND TRADEMARK OFFICE

01 DEC 2005

Commissioner for Patents
United States Patent and Trademark Office
P.O. Box 1450
Alexandria, VA 22313-1450
www.uspto.g

PROSKAUER ROSE LLP
Patent Department
1585 Broadway
New York, NY 10036

| | | |
|---|---|---|
| In re Application of: | : | |
| DERICHS, Heinrich-Wilhelm | : | DECISION ON PETITION |
| U.S. Application No.: 10/526,204 | : | UNDER 37 CFR 1.137(b) |
| Int'l Application No.: PCT/EP03/01531 | : | |
| Int'l Filing Date: 15 February 2003 | : | |
| Priority Date: 26 April 2002 | : | |
| Attorney's Docket No.: 20496-476 | : | |
| For: DEEP ROLLING ROLLER HEAD OF | : | |
| A DEEP ROLLING TOOL | : | |

The petition to revive under 37 CFR 1.137(b) filed 28 February 2005 in the above-captioned application is hereby **GRANTED** as follows:

Applicant's statement that "the entire delay in filing the required reply from the due date for the required reply until the filing of a grantable petition under 37 CFR 1.137(b) was unintentional" satisfies the requirement of 37 CFR 1.137(b)(3).

Applicant has now submitted the basic national fee, and the requirements of 37 CFR 1.137(b) have been satisfied. Therefore, the request to revive the application is granted as to the United States of America.

This application is being returned to the National Stage Processing Branch of the Office of PCT Operations for further processing in accordance with this decision, including the mailing of a Notification Of Missing Requirements (Form PCT/DO/EO/905) requiring submission of an executed oath or declaration in compliance with 37 CFR 1.497, the surcharge for filing the oath or declaration later than thirty months after the priority date, and English translation of the international application, and the processing fee for filing the translation later than thirty months after the priority date.

Richard M. Ross
PCT Petitions Attorney
Office Of PCT Legal Administration
Telephone: (571) 272-3296
Facsimile: (571) 273-0459

UNITED STATES PATENT AND TRADEMARK OFFICE

Commissioner for Patents
United States Patent and Trademark Office
P.O. Box 1450
Alexandria, VA 22313-1450
www.uspto.gov

COPY MAILED

MAR 3 1 2008

**SNIDER & ASSOCIATES**
**P. O. BOX 27613**
**WASHINGTON DC 20038-7613**

| | | |
|---|---|---|
| In re Application of | : | |
| **KAMADA,** Yumiko et al. | : | |
| Application No. 10/526,216 | : | DECISION ON PETITION |
| Filed: August 03, 2005 | : | TO WITHDRAW |
| Attorney Docket No. **TAK-174-PCT** | : | FROM RECORD |
| | : | |

This is a decision on the Request to Withdraw as attorney or agent of record under 37 C.F.R. § 1.36(b), filed March 10, 2008.

The request is **NOT APPROVED**.

A grantable request to withdraw as attorney/agent of record must be signed by every attorney/agent seeking to withdraw or contain a clear indication that one attorney is signing on behalf of another/others. A request to withdraw will not be approved unless at least 30 (thirty) days would remain between the date of approval and the later of the expiration date of a time to file a response or the expiration date of the maximum time period which can be extended under 37 C.F.R. § 1.136(a).

The Office cannot approve the request at this time since the reasons provided do not meet any of the conditions under the mandatory or permissive categories enumerated in 37 CFR 10.40. Section 10.40 of Title 37 of the Code of Federal Regulation states, "[a] practitioner shall not withdraw from employment in a proceeding before the Office without permission from the Office[.]" More specifically, 37 CFR 10.40 states, "[i]f paragraph (b) of this section is not applicable, a practitioner may not request permission to withdraw in matter pending before the Office unless such request or such withdrawal is" for one the permissive reasons listed in 37 CFR 10.40(c). The reasons set forth in the request, transfer of files to new firm, does not meet any of the conditions set forth in 37 CFR 10.40.

All future communications from the Office will continue to be directed to the above-listed address until otherwise notified by applicant.

Telephone inquiries concerning this decision should be directed to Tredelle Jackson at 571-272- 2783.

Tredelle D. Jackson
Petitions Examiner
Office of Petitions

cc: **RANKIN, HILL & CLARK LLP**
**925 EUCLID AVENUE, SUITE 700**
**CLEVELAND, OH 44115-1405**

UNITED STATES PATENT AND TRADEMARK OFFICE

Commissioner for Patents
United States Patent and Trademark Office
P.O. Box 1450
Alexandria, VA 22313-1450
www.uspto.gov

COPY MAILED

NOV 2 0 2009

OFFICE OF PETITIONS

STEPTOE & JOHNSON LLP
1330 CONNECTICUT AVENUE, N.W.
WASHINGTON, DC 20036

| | | |
|---|---|---|
| In re Patent of McIntyre et al. | : | |
| Patent No. 7,579,009 | : | |
| Issue Date: August 25, 2009 | : | DECISION ON REQUEST |
| Application No. 10/526,228 | : | FOR RECONSIDERATION OF |
| Filing Date: March 1, 2005 | : | PATENT TERM ADJUSTMENT |
| Attorney Docket No. 15373.0002 | : | |

This is in response to the "Petition for Reconsideration of Patent Term Adjustment Under 37 CFR 1.705(d)" filed August 25, 2009. Patentees request the determination of patent term adjustment indicated on the issue notification (and on the patent) be corrected from zero (0) days to one hundred sixty-one (161) days.

The request for reconsideration of the patent term adjustment indicated on the patent is **dismissed**.

On August 25, 2009, the application matured into United States Patent No. 7,579,009, with a patent term adjustment of 0 days. This request for reconsideration was timely filed within two months of the issue date of the patent. See 37 C.F.R. § 1.705(d).

Patentees maintain entitlement to an additional portion of patent term which amounts to a total of 161 days which is 537 days of Office delay under 35 U.S.C. § 154(b)(1)(B) ("B Delay") reduced by 376 days of Applicant delay.

Patentees assert the date of commencement for the instant national stage application is March 6, 2005. The Office notes the date of commencement is actually March 7, 2005, because March 6, 2005, fell on a Sunday.[1] Thus, B Delay based on the commencement date and the issue date is 536 days. However, a request for continued examination was filed in this application on January 30, 2008.

Pursuant to 35 U.S.C. § 154(b)(1)(B), B Delay in this case does not include the time period from the date a request for continued examination was filed until the date the patent issued. A request for continued examination was filed in this application on January 30, 2008.

[1] *See* PCT Rule 80.5.

Specifically, 35 U.S.C. § 154(b)(1)(B) states, with emphasis added,

> Subject to the limitations under paragraph (2), if the issue of an original patent is delayed due to the failure of the United States Patent and Trademark Office to issue a patent within 3 years after the actual filing date of the application in the United States, *not including* — (i) any time consumed by continued examination of the application requested by the applicant under section 132(b)....

The date of commencement is March 7, 2005. The date three years after the commencement date is March 7, 2008. A Request for Continued Examination was filed January 30, 2008. Since the RCE was filed prior to the date three years after the date of commencement, the amount of B delay in the instant case is 0 days.

Patentees have not shown an increase in the patent term adjustment of 0 days on the patent is warranted. Therefore, the patent term adjustment remains 0 days.

Submission of the $200.00 fee set forth in 37 CFR 1.18(e) is acknowledged. No additional fee is required.

Telephone inquiries specific to this decision should be directed to Senior Petitions Attorney Steven Brantley at (571) 272-3203.

Nancy Johnson
Senior Petitions Attorney
Office of Petitions

UNITED STATES PATENT AND TRADEMARK OFFICE

Commissioner for Patents
United States Patent and Trademark Office
P.O. Box 1450
Alexandria, VA 22313-1450
www.uspto.gov

**BROWDY AND NEIMARK, P.L.L.C.**
**624 NINTH STREET, NW**
**SUITE 300**
**WASHINGTON DC 20001-5303**

**COPY MAILED**

MAY 0 2 2007

**OFFICE OF PETITIONS**

ON PETITION

In re Application of :
Raviv et al. :
Application No. 10/526,232 :
Filed: March 1, 2005 :
Attorney Docket No. RAVIV2 :

This is a decision on the petition under 37 C.F.R. § 1.137(b), filed February 28, 2007, to revive the above-identified application.

The petition is **GRANTED.**

The petition satisfies the conditions for revival pursuant to the provisions of 37 CFR 1.137(b) in that (1) the reply in the form of an Amendment; (2) the petition fee; and (3) the required statement of unintentional delay have been received. Accordingly, the response has been accepted as having been unintentionally delayed.

It is not apparent whether the statement of unintentional delay was signed by a person who would have been in a position of knowing that the entire delay in filing the required reply from the due date for the reply until the filing of a grantable petition pursuant to 37 CFR 1.137(b) was unintentional. Nevertheless, in accordance with 37 CFR 10.18, the statement is accepted as constituting a certification of unintentional delay. However, in the event that petitioner has no knowledge that the delay was unintentional, petitioner must make such an inquiry to ascertain that, in fact, the delay was unintentional. If petitioner discovers that the delay was intentional, petitioner must notify the Office.

The Power of Attorney and Change of Correspondence Address Indication Form submitted on February 13, 2007, is hereby not accepted as it did not include a Statement under 37 CFR 3.73(b), which is required when an assignee wishes to take action in an application. Petitioner may also submit any documentary evidence of a chain of title from the original owner to the assignee (*e.g.*, copy of an executed assignment). The documents submitted to establish ownership may be required to be recorded pursuant to § 3.11 in the assignment records of the Office as a condition to permitting the assignee to take action in a matter pending before the Office. A courtesy copy will be mailed to the address listed on the petition. All future correspondence will continue to be directed to the above listed address until properly notified.

This matter is being referred to Technology Center 2600 for further examination on the merits.

Telephone inquiries regarding this decision should be directed to the undersigned at (571) 272-3206.

Liana Walsh
Petitions Examiner
Office of Petitions

Cc: VLADIMIR SHERMAN
P.O. BOX 654
HERZELIA PITVACH 46105 ISRAEL

#5

UNITED STATES PATENT AND TRADEMARK OFFICE

Commissioner for Patents
United States Patent and Trademark Office
P.O. Box 1450
Alexandria, VA 22313-1450
www.uspto.gov

03 AUG 2006

Patrick O'Shea
O'Shea Getz & Kosakowski
1500 Main Street
Suite 912
Springfield MA 01115

| | |
|---|---|
| In re Application of<br>SCHANZ et al.<br>Application No.: 10/526,233<br>PCT No.: PCT/EP03/09481<br>Int. Filing Date: 27 August 2003<br>Priority Date: 28 August 2002<br>Attorney's Docket No.: 2000-0001<br>For: CONTROL SYSTEM FOR LIGHT TUBES | DECISION ON<br>PETITION<br>UNDER 37 CFR 1.47(b) |

This is a decision on petition under 37 CFR 1.47(b), filed 11 April 2006 to permit petitioner (applicant) to file the above-captioned application on behalf of the non-signing inventors Christian Schanz and Matthias Rupprecht. Petitioner requests a four month extension of time, which is granted.

## BACKGROUND

On 27 August 2003, applicant filed international application No. PCT/EP03/09481 which claimed a priority date of 28 August 2002, and which designated the United States. A copy of the international application was communicated to the United States by the International Bureau on 25 March 2004.

On 28 February 2005, within 30 months from the priority date, applicant filed a transmittal letter for entry into the national stage in the United States which was accompanied by, *inter alia*,: basic national filing fee.

On 05 October 2005, the United States Designated/Elected Office (DO/EO/US) mailed a NOTIFICATION OF MISSING REQUIREMENTS indicating that the oath or declaration of the inventor, in compliance with 37 CFR 1.497(a) and (b) must be furnished within two months from the mail date of the notice or the application would be abandoned. Extensions of time were available.

On 11 April 2006, petitioner filed the instant petition requesting that the above-identified application be accepted under the provisions of 37 CFR 1.47(b). The petition was accompanied by an unexecuted declaration and a copy of an unexecuted Assignment.

## DISCUSSION

A petition under 37 CFR 1.47(b) must be accompanied by (1) the requisite petition fee, (2) factual proof that the inventor refuses to execute the application or cannot be reached after diligent effort, (3) a statement of the last known address of the inventor, (4) an oath or declaration by the 37 CFR 1.47(b) applicant on behalf of and as agent for the non-signing inventor, (5) proof

that the 37 CFR 1.47(b) applicant has sufficient proprietary interest in the application, and (6) a showing that such action is necessary to preserve the rights of the parties or to prevent irreparable damage.

Petitioner has satisfied Item (1) with payment of the requisite petition fee and Item (3) with a statement of the last known address of the inventors.

With regard to Item (2), petitioner has not provided any proof that the joint inventors refuse or are unavailable to sign the application. See MPEP. 409.03(d), which states in pertinent part, "a refusal by an inventor to sign an oath or declaration when the inventor has not been presented with the application papers does not itself suggest that the inventor is refusing to join the application unless it is clear that the inventor understands exactly what he or she is being asked to sign and refuses to accept the application papers." Here, there is no evidence that the inventors were presented with a copy of the application papers and thus, there is insufficient evidence to conclude that the inventor refuses to sign the application. The statement of someone having first hand knowledge of the facts is required. See MPEP. 409.03(d) for further instructions. Item (2) is not satisfied.

As for Item (4), petitioner has not provided a declaration executed on behalf of the inventors by the 37 CFR 1.47(b) petitioner. Thus, the declaration does not fulfill the requirements of 37 CFR 1.497(a) and (b). Item (4) is not satisfied.

Regarding Item (5), Section 409.03(f) of the MPEP, **Proof of Proprietary Interest**, states, in part:

> When an application is deposited pursuant to 37 CFR 1.47(b), the 37 CFR 1.47(b) applicant must prove that
>
> (A) the invention has been assigned to the applicant, or
> (B) the inventor has agreed in writing to assign the invention to the applicant, or
> (C) the applicant otherwise has sufficient proprietary interest in the subject matter to justify the filing of the application.
>
> If the application has been assigned, a copy of the assignment (in the English Language) must be submitted. The assignment must clearly indicate that the invention described in the 37 CFR 1.47(b) application was assigned to the 37 CFR 1.47(b) applicant. A statement under 37 CFR 3.73(b) by the assignee must also be submitted (see MPEP § 324)....
>
> When an inventor has agreed in writing to assign an invention described in an application deposited pursuant to 37 CFR 1.47(b), a copy of that agreement should be submitted. If an agreement to assign is dependent on certain specified conditions being met, it must be established by a statement of facts by someone with first hand knowledge of the circumstances in which those conditions have been met. A typical agreement to assign is an employment agreement where an employee (nonsigning inventor) agrees to assign to his or her employer (37 CFR 1.47(b) applicant) all inventions made during employment. When such an agreement is relied on, it must be established by the affidavit or declaration of a person having firsthand knowledge of the facts that the invention was made by the employee while employed by the 37 CFR 1.47(b) applicant.
>
> If the invention has not been assigned, or if there is no written agreement to assign, the 37 CFR 1.47(b) applicant must demonstrate that he or she otherwise has a sufficient proprietary interest in the matter.

> A proprietary interest obtained other than by assignment or agreement to assign may be demonstrated by an appropriate legal memorandum to the effect that a court of competent jurisdiction (federal, state, or foreign) would by the weight of authority in that jurisdiction award title of the invention to the 37 CFR 1.47(b) applicant. The facts in support of any conclusion that a court would award title to the 37 CFR 1.47(b) applicant should be made of record by way of an affidavit or declaration of the person having firsthand knowledge of same. The legal memorandum should be prepared and signed by an attorney at law familiar with the law of the jurisdiction involved. A copy (in the English language) of a statute (if other than the United States statute) or a court decision (if other than a reported decision of a federal court or a decision reported in the United States Patents Quarterly) relied on to demonstrate a proprietary interest should be made of record.

Here, petitioner is attempting to prove that the 37 CFR 1.47(b) applicant has sufficient proprietary interest in the subject matter to justify filing the application. The assignment attached to the petition is defective to prove this interest because the assignment provided is not signed by the inventors.

Nor has Petitioner provided an employment agreement where an employee (nonsigning inventor) agrees to assign to his or her employer (37 CFR 1.47(b) applicant) all inventions made during employment and a firsthand knowledge statement that the invention was made by the employee while employed by the 37 CFR 1.47(b) applicant.

Where there is no written agreement to assign or the invention has not been assigned, petitioner must demonstrate a proprietary interest by an appropriate legal memorandum. No such memorandum accompanied the petition. As stated above and reiterated here, an appropriate legal memorandum to the effect that a court of competent jurisdiction (federal, state, or foreign) would by the weight of authority in that jurisdiction award title of the invention to the 37 CFR 1.47(b) applicant is required. The facts in support of any conclusion that a court would award title to the 37 CFR 1.47(b) applicant should be made of record by way of an affidavit or declaration of the person having firsthand knowledge of the same. The legal memorandum should be prepared and signed by an attorney at law familiar with the law of the jurisdiction involved. A copy (in the English language) of a statute (if other than the United States statute) or a court decision (if other than a reported decision of a federal court or a decision reported in the United States Patents Quarterly) relied on to demonstrate a proprietary interest should be made of record. A statement under 37 CFR 3.73(b) by the assignee must also be submitted. Item (5) is not satisfied.

As for Item (6), irreparable damage may be established by a showing (a statement) that a filing date is necessary to preserve the rights of the party and to prevent irreparable damage." No such statement has been presented. Thus, item (6) is not yet satisfied.

Accordingly, items (2), (4), (5) and (6) above have not been satisfied and the petition under 37 CFR 1.47(b) must be dismissed.

## CONCLUSION

The petition under 37 CFR 1.47(b) is **DISMISSED WITHOUT PREJUDICE**.

If reconsideration on the merits of this petition is desired, a proper response must be filed within TWO (2) MONTHS from the mail date of this decision. Any reconsideration request should include a cover letter entitled "Renewed Petition Under 37 CFR 1.47(b)." No additional

petition fee is required. Extensions of time may be obtained under 37 CFR 1.136(a).

Any further correspondence with respect to this matter should be addressed to the Mail Stop PCT, Commissioner for Patents, P.O. Box 1450, Alexandria, Virginia 22313-1450, with the contents of the letter marked to the attention of the Office of PCT Legal Administration.

Cynthia M. Kratz
Attorney Advisor
PCT Legal Office

Tel: 571-272-3286
Fax: 571-273-0459

#7

UNITED STATES PATENT AND TRADEMARK OFFICE

Commissioner for Patents
United States Patent and Trademark Office
P.O. Box 1450
Alexandria, VA 22313-1450
www.uspto.gov

02 FEB 2007

Patrick O'Shea
O'Shea Getz & Kosakowski
1500 Main Street
Suite 912
Springfield MA 01115

| | |
|---|---|
| In re Application of<br>SCHANZ et al.<br>Application No.: 10/526,233<br>PCT No.: PCT/EP03/09481<br>Int. Filing Date: 27 August 2003<br>Priority Date: 28 August 2002<br>Attorney's Docket No.: 2000-0001<br>For: CONTROL SYSTEM FOR LIGHT TUBES | DECISION ON<br>RENEWED PETITION<br>UNDER 37 CFR 1.47(b) |

This is a decision on renewed petition under 37 CFR 1.47(b), filed 09 November 2006 to permit petitioner (applicant) to file the above-captioned application on behalf of the non-signing inventors Christian Schanz and Matthias Rupprecht. Petitioner requests a two month extension of time, which is granted.

## BACKGROUND

On 27 August 2003, applicant filed international application No. PCT/EP03/09481 which claimed a priority date of 28 August 2002, and which designated the United States. A copy of the international application was communicated to the United States by the International Bureau on 25 March 2004.

On 28 February 2005, within 30 months from the priority date, applicant filed a transmittal letter for entry into the national stage in the United States which was accompanied by, *inter alia*,: basic national filing fee.

On 05 October 2005, the United States Designated/Elected Office (DO/EO/US) mailed a NOTIFICATION OF MISSING REQUIREMENTS indicating that the oath or declaration of the inventor, in compliance with 37 CFR 1.497(a) and (b) must be furnished within two months from the mail date of the notice or the application would be abandoned. Extensions of time were available.

On 11 April 2006, petitioner filed a petition requesting that the above-identified application be accepted under the provisions of 37 CFR 1.47(b). The petition was accompanied by an unexecuted declaration and a copy of an unexecuted Assignment.

On 03 August 2006, a decision dismissing the petition was mailed to applicant indicating that Petitioner had not met the requirements of 37 CFR 1.47(b).

On 09 November 2006, Petitioner filed a renewed Petition under 37 CFR 1.47(b) along with declarations executed by the previously non-signing inventors.

## DISCUSSION

A review of the declarations reveals that the declarations identify and are executed by each of the previously nonsigning inventors, and state the residency, citizenship and mailing address of each inventor. Thus, the declarations are acceptable and the requirements of 37 CFR 1.497(a) and (b).

The renewed petition under 37 CFR 1.47(b) is considered moot as declarations executed by the previously unavailable inventors have now been submitted and are acceptable under 37 CFR 1.497(a) and (b).

## CONCLUSION

For the above reasons, the renewed petition under 37 CFR 1.47(b) is considered **MOOT**. The declarations executed by the joint inventors and submitted on 09 November 2006 is in compliance with 37 CFR 1.497(a) and (b) and are acceptable.

This application is being forwarded to United States Designated/Elected Office for further processing. The 35 U.S.C. 371(c)(1), (c)(2) and (c)(4) date is **09 November 2006.**

Cynthia M. Kratz

Cynthia M. Kratz
Attorney Advisor
PCT Legal Office

Tel: 571-272-3286
Fax: 571-273-0459

26 SEP 2005

UNITED STATES PATENT AND TRADEMARK OFFICE

Commissioner for Patents
United States Patent and Trademark Office
P.O. Box 1450
Alexandria, VA 22313-1450
www.uspto.gov

Perkins Coie LLP
P.O. Box 2168
Menlo Park, California 94026-2168

| | |
|---|---|
| In re Application of<br>FOUNTAIN et al.<br>Application No.: 10/526,252<br>PCT No.: PCT/US03/26637<br>Int. Filing Date: 25 August 2003<br>Priority Date: 24 August 2002<br>Attorney Docket No.: 36321-8025.US01<br>For: SECURE FEATURE ACTIVATION | DECISION ON PETITION<br>UNDER 37 CFR 1.137(b) |

The petition to revive under 37 CFR 1.137(b) filed 19 September 2005 in the above-captioned application is hereby **GRANTED** as follows:

Applicants' statement that "the entire delay in filing the required reply from the due date for the reply until the filing of a grantable petition under 37 CFR 1.137(b) was unintentional" meets the requirements of 37 CFR 1.137(b)(3).

A review of the application file reveals that applicants have submitted the basic national fee and the requirements of 37 CFR 1.137(b) have been satisfied. Therefore, the request to revive the application abandoned under 35 U.S.C. 371(d) is granted as to the National stage in the United States of America.

This application is being forwarded to the United States Designated/Elected Office (US/DO/EO) for continued processing including the issuance of a Notification of Missing Requirements (Form PCT/DO/EO/905) indicating that an oath or declaration along with the $65 surcharge for filing the oath or declaration after the thrity-month period is required.

Anthony Smith

Anthony Smith
Attorney-Advisor
Office of PCT Legal Administration
Telephone: (571) 272-3298
Facsimile: (571) 273-0459

UNITED STATES PATENT AND TRADEMARK OFFICE

UNITED STATES DEPARTMENT OF COMMERCE
United States Patent and Trademark Office
Address: COMMISSIONER FOR PATENTS
P.O. Box 1450
Alexandria, Virginia 22313-1450
www.uspto.gov

BRINKS HOFER GILSON & LIONE
P.O. BOX 10395
CHICAGO, IL 60610

Mail Date: 04/21/2010

| | | |
|---|---|---|
| **Applicant** | : Lasse Wesseltoft Mogensen | : DECISION ON REQUEST FOR |
| **Patent Number** | : 7654484 | : RECALCULATION of PATENT |
| **Issue Date** | : 02/02/2010 | : TERM ADJUSTMENT IN VIEW |
| **Appliction No** | : 10/526,253 | : OF WYETH AND NOTICE OF INTENT TO |
| **Filed** | : 02/08/2006 | : ISSUE CERTIFICATE OF CORRECTION |
| | | : |

The Request for Recalculation is **GRANTED** to the extent indicated.

The patent term adjustment has been determined to be **729** days. The USPTO will *sua sponte* issue a certificate of correction reflecting the amount of PTA days determined by the recalculation.

Prior to the issuance of the certificate of correction, the USPTO will afford patentee an opportunity to be heard and request reconsideration. Accordingly, patentee has **one month or thirty (30) days**, whichever is longer, to file a request for reconsideration of this patent term adjustment calculation. See 35 U.S.C. 154(b)(3)(B)(ii) and 37 CFR 1.322(a)(4). No extensions of time will be granted under 37 CFR 1.136.

Patentee should use document code PET.OP if electronically filing a request for reconsideration of this patent term adjustment calculation. The patentee must also include the information required by 37 CFR 1.705(b)(2) and the fee required by 37 CFR 1.18(e). If patentee does not file a timely request for reconsideration of this patent term adjustment calculation including the information required by 37 CFR 1.705(b)(2) and the fee required by 37 CFR 1.18(e), the USPTO will issue a certificate of correction reflecting the PTA determination noted above.

Patentee should be aware that in order to preserve the right to review in the United States District Court for the District of Columbia of the USPTO patent term adjustment determination, patentee must ensure that he or she also take the steps required under 35 U.S.C. 154(b)(4)(A) in a timely manner. Nothing in the request for recalculation should be construed as providing an alternative time frame for commencing a civil action under 35 U.S.C. 154(b)(4)(A).

Any questions concerning this decision should be directed to the Office of Patent Legal Administration at 571-272-7702.

UNITED STATES PATENT AND TRADEMARK OFFICE

UNITED STATES DEPARTMENT OF COMMERCE
United States Patent and Trademark Office
Address: COMMISSIONER FOR PATENTS
P.O. Box 1450
Alexandria, Virginia 22313-1450
www.uspto.gov

CROMPTON, SEAGER & TUFTE, LLC
1221 NICOLLET AVENUE
SUITE 800
MINNEAPOLIS, MN 55403-2420

Mail Date: 04/21/2010

| | | |
|---|---|---|
| **Applicant** | : Gunther Josef Hoier | : DECISION ON REQUEST FOR |
| **Patent Number** | : 7640855 | : RECALCULATION of PATENT |
| **Issue Date** | : 01/05/2010 | : TERM ADJUSTMENT IN VIEW |
| **Appliction No** | : 10/526,255 | : OF WYETH AND NOTICE OF INTENT TO |
| **Filed** | : 11/29/2005 | : ISSUE CERTIFICATE OF CORRECTION |
| | | : |

The Request for Recalculation is **GRANTED** to the extent indicated.

The patent term adjustment has been determined to be **1072** days. The USPTO will *sua sponte* issue a certificate of correction reflecting the amount of PTA days determined by the recalculation.

Prior to the issuance of the certificate of correction, the USPTO will afford patentee an opportunity to be heard and request reconsideration. Accordingly, patentee has **one month or thirty (30) days**, whichever is longer, to file a request for reconsideration of this patent term adjustment calculation. See 35 U.S.C. 154(b)(3)(B)(ii) and 37 CFR 1.322(a)(4). No extensions of time will be granted under 37 CFR 1.136.

Patentee should use document code PET.OP if electronically filing a request for reconsideration of this patent term adjustment calculation. The patentee must also include the information required by 37 CFR 1.705(b)(2) and the fee required by 37 CFR 1.18(e). If patentee does not file a timely request for reconsideration of this patent term adjustment calculation including the information required by 37 CFR 1.705(b)(2) and the fee required by 37 CFR 1.18(e), the USPTO will issue a certificate of correction reflecting the PTA determination noted above.

Patentee should be aware that in order to preserve the right to review in the United States District Court for the District of Columbia of the USPTO patent term adjustment determination, patentee must ensure that he or she also take the steps required under 35 U.S.C. 154(b)(4)(A) in a timely manner. Nothing in the request for recalculation should be construed as providing an alternative time frame for commencing a civil action under 35 U.S.C. 154(b)(4)(A).

Any questions concerning this decision should be directed to the Office of Patent Legal Administration at 571-272-7702.

27 APR 2006

#6

United States Patent and Trademark Office

Commissioner for Patents
United States Patent and Trademark Office
P.O. Box 1450
Alexandria, VA 22313-1450
www.uspto.gov

McDermott, Will & Emery
4370 La Jolla Village Drive, Suite 700
San Diego, CA 92122

| | | |
|---|---|---|
| In re Application of | : | |
| Abreu et al. | : | |
| Application No.: 10/526,256 | : | |
| Int. App. No.: PCT/US03/23926 | : | |
| Int. Filing Date: 30 July 2003 | : | |
| Priority Date: 30 August 2002 | : | DECISION |
| Attorney Docket No.: 066783-0152 | : | |
| For: Mutations In NOD2 Are Associated With | : | |
| Fibrostenosing Disease In Patients With Crohn's... | : | |

This is in response to the "Response To Notification Of Missing Requirements..." filed on 17 January 2006.

## BACKGROUND

International Application No. PCT/US04/04740 was filed on 30 July 2003, claimed a priority date of 30 August 2002, and designated the United States. The 30 month period to pay the basic national fee in the United States expired at midnight on 28 February 2005. Applicants filed *inter alia* the basic national fee on 28 February 2005.

On 17 June 2005, a Notification of Missing Requirements (Form PCT/DO/EO/905) was mailed to applicants, requiring the submission of an oath or declaration in compliance with 37 CFR 1.497(a) and (b).

On 30 January 2006, a Notification of Abandonment (Form PCT/DO/EO/909) was mailed, indicating that this international application had become abandoned with respect to the national stage in the United States for failure to timely reply to the Form PCT/DO/EO/905 mailed on 17 June 2005.

## DISCUSSION

Review of the record reveals that the instant Response (requesting an extension of time under 37 CFR 1.136(a)) was received within the extendable time period for response to the Form PCT/DO/EO/905 mailed on 17 June 2005. As such, the 30 January 2006 Notification of Abandonment (Form PCT/DO/EO/909) was premature, and it is hereby **VACATED**.

Inspection of the declaration filed on 17 January 2006 reveals that it appears to have been assembled from separate individual sheets listing the inventor(s) who signed each such sheet. Since counsel has not presented complete copies of the declaration documents signed by each inventor, it is not clear that each inventor had the benefit of having a complete declaration document prior to signing. Counsel is required to submit complete copies of each signed declaration document.

## CONCLUSION

The declaration filed on 17 January 2006 is **NOT ACCEPTED**, without prejudice.

Applicant must file a proper response as described hereinabove within **ONE (1) MONTH** of the mailing date of this Decision.[1] Extensions of time under 37 CFR 1.136(a) are **NOT** available. Failure to timely file such a response will result in **ABANDONMENT**.

Any further correspondence with respect to this matter should be addressed to the Assistant Commissioner for Patents, P.O. Box 1450, Mail Stop PCT, Alexandria, VA 22313-1450, with the contents of the letter marked to the attention of the PCT Legal Office.

Boris Milef
PCT Legal Examiner
Office of PCT Legal Administration

George M. Dombroske
PCT Legal Examiner
Office of PCT Legal Administration
Tel: (571) 272-3283
Fax: (571) 273-0459

[1]It is noted that the time period in which to respond to the 17 June 2005 Notification of Missing Requirements (Form PCT/DO/EO/905), as extended under 37 CFR 1.136(a), expired on 17 January 2006.

UNITED STATES PATENT AND TRADEMARK OFFICE

UNITED STATES DEPARTMENT OF COMMERCE
United States Patent and Trademark Office
Address: COMMISSIONER FOR PATENTS
P.O. Box 1450
Alexandria, Virginia 22313-1450
www.uspto.gov

WOLF GREENFIELD & SACKS, P.C.
600 ATLANTIC AVENUE
BOSTON, MA 02210-2206

Mail Date: 04/21/2010

| | | |
|---|---|---|
| **Applicant** | : Qingshan Huang | : DECISION ON REQUEST FOR |
| **Patent Number** | : 7629438 | : RECALCULATION of PATENT |
| **Issue Date** | : 12/08/2009 | : TERM ADJUSTMENT IN VIEW |
| **Appliction No** | : 10/526,267 | : OF WYETH AND NOTICE OF INTENT TO |
| **Filed** | : 03/23/2006 | : ISSUE CERTIFICATE OF CORRECTION |
| | | : |

The Request for Recalculation is **GRANTED** to the extent indicated.

The patent term adjustment has been determined to be **718** days. The USPTO will *sua sponte* issue a certificate of correction reflecting the amount of PTA days determined by the recalculation.

Prior to the issuance of the certificate of correction, the USPTO will afford patentee an opportunity to be heard and request reconsideration. Accordingly, patentee has **one month or thirty (30) days**, whichever is longer, to file a request for reconsideration of this patent term adjustment calculation. See 35 U.S.C. 154(b)(3)(B)(ii) and 37 CFR 1.322(a)(4). No extensions of time will be granted under 37 CFR 1.136.

Patentee should use document code PET.OP if electronically filing a request for reconsideration of this patent term adjustment calculation. The patentee must also include the information required by 37 CFR 1.705(b)(2) and the fee required by 37 CFR 1.18(e). If patentee does not file a timely request for reconsideration of this patent term adjustment calculation including the information required by 37 CFR 1.705(b)(2) and the fee required by 37 CFR 1.18(e), the USPTO will issue a certificate of correction reflecting the PTA determination noted above.

Patentee should be aware that in order to preserve the right to review in the United States District Court for the District of Columbia of the USPTO patent term adjustment determination, patentee must ensure that he or she also take the steps required under 35 U.S.C. 154(b)(4)(A) in a timely manner. Nothing in the request for recalculation should be construed as providing an alternative time frame for commencing a civil action under 35 U.S.C. 154(b)(4)(A).

Any questions concerning this decision should be directed to the Office of Patent Legal Administration at 571-272-7702.

26 OCT 2005

UNITED STATES PATENT AND TRADEMARK OFFICE

Commissioner for Patents
United States Patent and Trademark Office
P.O. Box 1450
Alexandria, VA 22313-1450
www.uspto.gov

000210
MERCK AND CO., INC.
P.O. Box 2000
Rahway, NJ 07065-0907

| | | |
|---|---|---|
| In re Application of | : | |
| WAI, John S. *et al* | : | |
| U.S. Application No.: 10/526,275 | : | |
| PCT No.: PCT/US03/28366 | : | |
| Int. Filing Date: 10 September 2003 | : | |
| Priority Date: 11 September 2002 | : | **DECISION** |
| Attorney Docket No.: 21162YP | : | |
| For: DIHYDROXYPYRIDOPYRAZINE-1,6- | : | |
| DIONE COMPOUNDS USEFUL AS HIV | : | |
| INTEGRASE INHIBITORS | : | |

Applicants' "Request for a Corrected Filing Receipt and Corrected Notice of Acceptance" filed via facsimile on 13 October 2005 is treated as a petition under 37 CFR 1.181 and hereby **GRANTED** as follows:

The filing receipt and Notification of Acceptance of Application Under 35 U.S.C. 371 and 1.495 (Form PCT/DO/EO/903) mailed 30 September 2005 indicated that applicants asserted small entity status on 01 March 2005. That is not the case. There is no record that small entity status was asserted in the above-captioned application.

For this reason, the filing receipt and Notification of Acceptance of Application Under 35 U.S.C. 371 and 1.495 (Form PCT/DO/EO/903) mailed 30 September 2005 are both **VACATED**.

This application is being forwarded to the National Stage Processing Division of the Office of PCT Operations for providing a corrected Notification of Acceptance of Application Under 35 U.S.C. 371 and 1.495 (Form PCT/DO/EO/903) and filing receipt. The application will then be forwarded to Tech Center 1700 for examination.

James Thomson

James Thomson
Attorney Advisor
Office of PCT Legal Administration

Tel.: (571) 272-3302

UNITED STATES PATENT AND TRADEMARK OFFICE

COMMISSIONER FOR PATENTS
UNITED STATES PATENT AND TRADEMARK OFFICE
P.O. BOX 1450
ALEXANDRIA, VA 22313-1450
www.uspto.gov

MERCK AND CO., INC
P O BOX 2000
RAHWAY NJ 07065-0907

MAILED

MAR 16 2009

OFFICE OF PETITIONS

In re Application :
Wai, et al. :
Application No. 10/526,275 : PATENT TERM ADJUSTMENT
Filed: March 1, 2005 :
Dkt. No.: 21162YP :

This is a decision on the "APPLICATION FOR PATENT TERM ADJUSTMENT UNDER 37 CFR 1.705(b)," filed November 7, 2008.

The application for patent term adjustment (PTA) under 37 CFR 1.705(b) is **HELD IN ABEYANCE**.

The Determination of Patent Term Adjustment under 35 U.S.C. 154(b), mailed August 21, 2008, indicated a patent term adjustment (PTA) to date of 592 days. The instant application for PTA was timely filed November 7, 2008, at the time of submission of the issue fee payment. Applicants argue that the application is entitled to additional adjustment under the provisions of 37 CFR 1.705(b).

The correct PTA at the time of the allowance is 592 days, as indicated in the Determination of Patent Term Adjustment.

Applicants herein do not contest the adjustment of 592 days accorded at the time of allowance.

The instant application for patent term adjustment requests reconsideration of the patent term adjustment as it relates to the Office's failure to issue the patent within three years of the filing date of the application. A decision is being **held in abeyance** until after the actual patent date. Knowledge of the actual date the patent issues is required to calculate the amount, if any, of additional patent term for Office failure to issue the patent within three years. *See*, 37 CFR 1.703(b).

Applicants are given **TWO (2) MONTHS** from the issue date of the patent to file a written request for reconsideration of the patent term adjustment for Office failure to issue the patent within three years. A copy of this decision should accompany the request. Applicants may seek such consideration without payment of an additional fee. However, as to all other bases for seeking reconsideration of the patent term adjustment indicated in the

patent, all requirements of 37 CFR 1.705(d) must be met. Requests for reconsideration on other bases must be timely filed and must include payment of the required fee.

Applicants are reminded that if an application is entitled to an adjustment under 35 USC 154(b)(1)(B), the entire period during which the application was pending (except for periods excluded under 35 USC 154(b)(1)(B)(i)-(iii)), and not just the period beginning three years after the actual filing date of the application, is the period of delay under 35 USC 154(b)(1)(B) in determining whether periods of delay overlap under 35 USC 154(b)(2)(A).

Thus, any days of delay for Office issuance of the patent more than three years after the filing date of the application which overlap with the days of patent term adjustment accorded prior to the issuance of the patent will not result in any additional patent term adjustment. *See*, 35 USC 154(b)(1)(B), 35 USC 154(b)(2)(A), and 37 CFR § 1.703(f). *See, also, Revision of Patent Term Extension and Patent Term Adjustment Provisions; Final Rule*, 69 Fed. Reg. 21704 (April 22, 2004).

Thus, the application is entitled to an adjustment of 592 days as of the time of allowance.

The required PTA application fee of $200.00 has been charged to applicants' deposit account, as authorized.

Applicants are further advised that the patent term adjustment indicated in the patent will include any additional patent term accrued pursuant to §§ 1.702(a)(4) and 1.702(b).

This application is being forwarded to the Office of Data Management for processing into a patent.

Telephone inquiries specific to this matter should be directed to Petitions Attorney Alesia M. Brown at (571) 272-3205.

Kery Fries

Kery Fries
Senior Legal Advisor
Office of Patent Legal Administration
Office of Deputy Commissioner
for Patent Examination Policy

UNITED STATES PATENT AND TRADEMARK OFFICE

COMMISSIONER FOR PATENTS
UNITED STATES PATENT AND TRADEMARK OFFICE
P.O. BOX 1450
ALEXANDRIA, VA 22313-1450
www.uspto.gov

MERCK AND CO., INC
P O BOX 2000
RAHWAY NJ 07065-0907

**COPY MAILED**

DEC 15 2009

**OFFICE OF PETITIONS**

In re Patent No. 7,517,532
Issued: April 14, 2009
Application No. 10/526,275
Filed: March 1, 2005
Dkt. No.: 21162YP

: PATENT TERM ADJUSTMENT

This is a decision on the "APPLICATION FOR PATENT TERM ADJUSTMENT UNDER 37 CFR 1.705(b)," filed April 17, 2009. Patentees request correction of the patent term adjustment from 630 days to 1,001 days. Patentees requested this correction on the sole basis that the Office took in excess of three years to issue the above-referenced patent. This matter is being properly treated under 37 CFR 1.705(d).

The application for patent term adjustment (PTA) under 37 CFR 1.705(d) is **DISMISSED**.

The above-identified application matured into U.S. Pat. No. 7,517,532 on April 14, 2009. The patent issued with a patent term adjustment of 630 days. The instant application for patent term adjustment was timely filed in accordance with 37 CFR 1.705(d). Applicants argued that in view of Wyeth v. Dudas, 580 F. Supp. 2d 138, 88 U.S.P.Q. 2d 1538 (D.D.C. 2008), the patent was entitled to an adjustment of 1,001 days (630 days pursuant to 35 USC 154(b)(1)(A) *plus* 409 days pursuant to 35 USC 154(b)(1)(B) *less* 38 overlapping days).

Patentees determined that the commencement date of the application is March 1, 2008 and, thus, calculate a period of over three year delay of 409 days (March 1, 2008 to April 14, 2009). This calculation, however, is not accurate, as discussed herein.

Under 37 CFR 1.703(f), patentees are entitled to a period of patent term adjustment equal to the period of delays based on the grounds set forth in 37 CFR 1.702 reduced by the period of time equal to the period of time during which patentees failed to engage in reasonable efforts to conclude prosecution pursuant to 37 CFR 1.704. In other words, patentees are entitled to the period of Office delay reduced by the period of applicant delay.

The Office asserts that as of the issuance of the patent on April 14, 2009, the application was pending three years and 399 days after the national stage commenced under 35 U.S.C. 371(b) or (f) in an international application. The commencement date is the date 30 months from the earliest priority date claimed in the international application. In this application, the earliest priority date claimed, as shown on the Notice of Acceptance of Application Under 35 U.S.C. § 371 and 37 CFR 1.495, mailed September 30, 2005, is September 11, 2002. Accordingly, the commencement date is March 11, 2005, and the period of adjustment pursuant to 37 CFR 1.703(b) began March 12, 2008, the day after the date that is three years after the date that

national stage commenced, and ended April 14, 2009, the date that the patent issued, or 399 days.

The Office asserts that certain action was not taken within the specified time frame, and thus, the adjustment of 630 days pursuant to 37 CFR 1.702(a) is correct. At issue is whether patentees should accrue 399 days of patent term adjustment for the Office taking in excess of three years to issue the patent, as well as 630 days for Office failure to take a certain action within a specified time frame (or examination delay).

The Office contends that the period of 399 days of delay in issuance of the patent under 37 CFR 1.702(b) overlaps with the period of 630 days of examination delay under 37 CFR 1.702(a). Patentees' calculation of the period of overlap is inconsistent with the Office's interpretation of this provision. 35 U.S.C. 154(b)(2)(A) limits the adjustment of patent term, as follows:

35 U.S.C. 154(b)(2)(A) limits the adjustment of patent term, as follows:

> To the extent that the periods of delay attributable to grounds specified in paragraph (1) overlap, the period of any adjustment granted under this subsection shall not exceed the actual number of days the issuance of the
> patent was delayed.

As explained in *Explanation of 37 CFR 1.703(f)*[1] *and of the United States Patent and Trademark Office Interpretation of 35 U.S.C. 154(b)(2)(A)*, 69 Fed. Reg. 34283 (June 21, 2004), the Office interprets 35 U.S.C. 154(b)(2)(A) as permitting either patent term adjustment under 35 U.S.C. 154(b)(1)(A)(i)-(iv), or patent term adjustment under 35 U.S.C. 154(b)(1)(B), but not as permitting patent term adjustment under both 35 U.S.C. 154(b)(1)(A)(i)-(iv) and 154(b)(1)(B). Accordingly, the Office implements the overlap provision as follows:

> If an application is entitled to an adjustment under 35 U.S.C. 154(b)(1)(B), the entire period during which the application was pending (except for periods excluded under 35 U.S.C. 154(b)(1)(B)(i)-(iii)), and not just the period beginning three years after the actual filing date of the application, is the period of delay under 35 U.S.C. 154(b)(1)(B) in determining whether periods of delay overlap under 35 U.S.C. 154(b)(2)(A). Thus, any days of delay for Office issuance of the patent more than 3 years after the filing date of the application, which overlap with the days of patent term adjustment accorded prior to the issuance of the patent will not result in any additional patent term adjustment. See 35 U.S.C. 154(b)(1)(B), 35 U.S.C. 154(b)(2)(A), and 37 CFR § 1.703(f). See *Changes to Implement Patent Term Adjustment Under Twenty Year Term; Final Rule*, 65 Fed. Reg. 54366 (Sept. 18, 2000). See also *Revision of Patent Term Extension and Patent Term*

---

[1] Likewise, 37 CFR 1.703(f) provides that:

> To the extent that periods of delay attributable to the grounds specified in §1.702 overlap, the period of adjustment granted under this section shall not exceed the actual number of days the issuance of the patent was delayed.

*Adjustment Provisions; Final Rule*, 69 Fed. Reg. 21704 (April 22, 2004), 1282 Off. Gaz. Pat. Office 100 (May 18, 2004).

Further, as stated in the *Explanation of 37 CFR 1.703(f) and of the United States Patent and Trademark Office Interpretation of 35 U.S.C. 154(b)(2)(A)*, the Office has consistently taken the position that if an application is entitled to an adjustment under the three-year pendency provision of 35 U.S.C. 154(b)(1)(B), the entire period during which the application was pending before the Office (except for periods excluded under 35 U.S.C. 154(b)(1)(B)(i)-(iii)), and not just the period beginning three years after national stage commenced, is the relevant period under 35 U.S.C. 154(b)(1)(B) in determining whether periods of delay "overlap" under 35 U.S.C. 154(b)(2)(A).

This interpretation is consistent with the statute. Taken together the statute and rule provide that to the extent that periods of delay attributable to grounds specified in 35 U.S.C. 154(b)(1) and in corresponding §1.702 overlap, the period of adjustment granted shall not exceed the actual number of days the issuance of the patent was delayed.

In this instance, the relevant period under 35 U.S.C. 154(b)(1)(B) in determining whether periods of delay "overlap" under 35 U.S.C. 154(b)(2)(A) is the period during which the application was pending before the Office beginning on the date that national stage commenced under 35 U.S.C. 371(b) or (f) in an international application, March 11, 2005, and ending on the date that the patent issued, April 14, 2009.

Pursuant to 35 U.S.C. 154(b)(1)(A) and 37 CFR 1.702(a), 630 days of examination delay accrued prior to issuance of patent. Pursuant to 35 U.S.C. 154(b)(1)(B) and 37 CFR 1.702(b), the application was pending three years and 399 days prior to the issuance of the patent on April 14, 2009.

The 399 days of delay in issuance of the patent under 37 CFR 1.702(b) overlap with the 630 days of patent term adjustment under 37 CFR 1.702(a). Entry of both the 399 days and the 630 days is neither permitted nor warranted given that 630 days is the actual number of days issuance of the patent was delayed.

Accordingly, at issuance, having considered the 399 days of Office delay under the three-year pendency provision in conjunction with the 630 days of examination delay, the Office properly entered 630 days of patent term adjustment.

In view thereof, no adjustment to the patent term will be made.

No additional fee is due in connection with this matter.

Telephone inquiries specific to this matter should be directed to the undersigned at (571) 272-3205.

Alesia M. Brown
Petitions Attorney
Office of Petitions

28 SEP 2005

UNITED STATES PATENT AND TRADEMARK OFFICE

Commissioner for Patents
United States Patent and Trademark Office
P.O. Box 1450
Alexandria, VA 22313-1450
www.uspto.gov

MERCK AND CO., INC
P O BOX 2000
RAHWAY NJ 07065-0907

| | |
|---|---|
| In re Application of<br>WAI, John S.<br>U.S. Application No.: 10/526,280<br>PCT No.: PCT/US03/28363<br>International Filing Date: 10 September 2003<br>Priority Date: 11 September 2002<br>Attorney's Docket No.: 21161YP<br>For: 8-HYDROXY-1-OXO-TETRAHYDROPYRROLOPYRAZINE COMPOUNDS USEFUL AS HIV INTEGRASE INHIBITORS | DECISION ON<br>PETITION<br>UNDER 37 CFR 1.181 |

Applicants filed "Request For Corrected Filing Receipt and Corrected Notice of Acceptance" on 23 September 2005, by facsimile. It has been treated as a petition under 37 CFR 1.181.

On 01 March 2005, applicants submitted a transmittal letter for entry into the national stage in the United States accompanied by the basic national fee, examination fee, and a declaration of the inventors.

On 14 September 2005, the Office mailed Notification of Acceptance (Form PCT/DO/EO/903) indicating that the requirements under 35 U.S.C. §371 (c)(1), (c)(2) and (c)(4) were satisfied on 01 March 2005 and indicating that a small entity statement and an indication of small entity status were filed on 01 March 2005.

Applicants request a corrected filing receipt and Notification of Acceptance to correct the allegedly erroneous indication of small entity status on each. A review of the application file does not reveal a small entity indication or statement. A corrected filing receipt and Notification of Acceptance will be issued.

For the above reasons, the Petition Under 37 CFR 1.181 is **GRANTED**.

This application is being forwarded to the National Stage Processing Branch of the Office of PCT Operations for continued processing in accordance with this decision, including issuance of a corrected Notification of Acceptance and a corrected filing receipt.

Erin P. Thomson

Erin P. Thomson
Attorney Advisor
PCT Legal Administration

Telephone: 571-272-3292
Facsimile: 571-273-0459

UNITED STATES PATENT AND TRADEMARK OFFICE

Commissioner for Patents
United States Patent and Trademark Office
P.O. Box 1450
Alexandria, VA 22313-1450
www.uspto.gov

NOVARTIS
CORPORATE INTELLECTUAL
PROPERTY
ONE HEALTH PLAZA 104/3
EAST HANOVER NJ 07936-1080

MAILED

JUN 19 2009

OFFICE OF PETITIONS

| | |
|---|---|
| In re Patent No. 7,470,792 | |
| Koch et al. | |
| Issue Date: December 30, 2008 | |
| Application No. 10/526,283 | DECISION ON REQUEST FOR |
| Filed: September 1, 2005 | RECONSIDERATION OF |
| Attorney Dkt. No. ON/4-32671A | PATENT TERM ADJUSTMENT |
| Title: Process For The Preparation of Epothilone Derivatives, New Epothilone Derivatives As Well As New Intermediate Products For the Process and The Methods of Preparing Same | |

This is in response to the "Application for Patent Term Adjustment-Post-Grant" filed February 13, 2009. This petition will be treated under 37 CFR 1.705(d).

The application for reconsideration of patent term adjustment is **GRANTED** to the extent indicated herein.

On December 30, 2008, the above-identified application matured into US Patent No. 7,470,792 with a patent term adjustment of 131 days. This request for reconsideration of patent term adjustment (including the required fee) was timely filed within two months of the issue date of the patent. See 37 CFR 1.705(d).

Patentee requests recalculation of the patent term adjustment based on the decision in Wyeth v. Dudas, 580 F. Supp. 2d 138, 88 U.S.P.Q. 2d 1538 (D.D.C. 2008). Patentees assert that pursuant to Wyeth, a PTO delay under 35 U.S.C. §154(b)(1)(A) overlaps with a delay under 35 U.S.C. §154(b)(1)(B) only if the delays "occur on the same day." Patentees maintain that the period of adjustment due to the Three Year Delay by the Office, pursuant to 37 CFR § 1.703(b), 120 days, does not overlap with the 131

day period of adjustment due to examination delay, pursuant to 37 CFR §1.702(a), as these periods do not occur on the same day.

Thus, patentee requests that the determination of patent term adjustment be increased by 120 days to a total of two hundred fifty-one (251) days.

The 251 day period is calculated based on the application having been filed under 35 U.S.C. §371 on September 1, 2005, and the issuance of the patent on December 30, 2008.

Accordingly, the period of adjustment under § 1.702(b) is 120 days, counting the number of days beginning on September 1, 2008 and ending on December 30, 2008.

The 205 day period is for failure by the Office to mail at least one of a notification under 35 U.S.C. 132 not later than fourteen months after the date on which the application was filed under 35 U.S.C. 371, pursuant to § 1.702(a)(1). A restriction requirement was mailed on May 25, 2007, which is 14 months and 205 days after the application was filed on September 1, 2005.

Patentee agrees that the total period of Office delay is the sum of the period of Three Years Delay terminated with the issuance of the patent and the period of Examination Delay to the extent that these periods of delay are not overlapping.

Patentee contends that the 120 days of the period of delay do not overlap with the 131 days.

Accordingly, patentees submit that the total period of Office Delay is 325 days, which is the sum of the period of Three Year Delay (120 days) and the period of Examination Delay (205 days).

As such, patentees assert entitlement to a patent term adjustment of 251 days (120 + 205 - 74 for applicant delay).

Under 37 CFR § 1.703(f), patentee is entitled to a period of patent term adjustment equal to the period of delays based on the grounds set forth in 37 CFR §1.702 reduced by the period of time equal to the period of time during which applicants failed to engage in reasonable efforts to conclude prosecution pursuant to 37 CFR §1.704. In other words, the period of Office delay

reduced by the period of applicant delay. The period of reduction of 74 days for applicant delay is not in dispute.

However, since this application was filed pursuant to 35 U.S.C. §371 the three-year delay is calculated based upon the date of commencement of the application. In this instance the date of commencement is March 13, 2005. Thus the application was pending three years and 292 days after the commencement date. The Office agrees that because certain actions were not taken within specified time frames, the patent is entitled to an adjustment of 205 days pursuant to 37 CFR 1.702(a). At issue is whether patentees should accrue an additional 292 days of patent term adjustment for the Office taking in excess of three years to issue the patent, as well as 205 days for Office failure to take a certain action within a specified time frame (or examination delay).

The Office contends that 205 of the 292 days overlap. Patentee's calculation of the period of overlap is inconsistent with the Office's interpretation of this provision. 35 U.S.C. 154(b)(2)(A) limits the adjustment of patent term, as follows:

> To the extent that the periods of delay attributable to grounds specified in paragraph (1) overlap, the period of any adjustment granted under this subsection shall not exceed the actual number of days the issuance of the patent was delayed.

Likewise, 37 CFR 1.703(f) provides that:

> To the extent that periods of delay attributable to the grounds specified in §1.702 overlap, the period of adjustment granted under this section shall not exceed the actual number of days the issuance of the patent was delayed.

As explained in *Explanation of 37 CFR 1.703(f) and of the United States Patent and Trademark Office Interpretation of 35 U.S.C. 154(b)(2)(A)*, 69 Fed. Reg. 34283 (June 21, 2004), the Office interprets 35 U.S.C. 154(b)(2)(A) as permitting either patent term adjustment under 35 U.S.C. 154(b)(1)(A)(i)-(iv), or patent term adjustment under 35 U.S.C. 154(b)(1)(B), but not as permitting patent term adjustment under both 35 U.S.C. 154(b)(1)(A)(i)-(iv) and 154(b)(1)(B). Accordingly, the Office implements the overlap provision as follows:

> If an application is entitled to an adjustment under 35 U.S.C. 154(b)(1)(B), the entire period during which the application was pending (except for periods excluded under 35 U.S.C. 154(b)(1)(B)(i)-(iii)), and not just the period beginning three years after the actual filing date of the application, is the period of delay under 35 U.S.C. 154(b)(1)(B) in determining whether periods of delay overlap under 35 U.S.C. 154(b)(2)(A). Thus, any days of delay for Office issuance of the patent more than 3 years after the filing date of the application, which overlap with the days of patent term adjustment accorded prior to the issuance of the patent will not result in any additional patent term adjustment. See 35 U.S.C. 154(b)(1)(B), 35 U.S.C. 154(b)(2)(A), and 37 CFR § 1.703(f). See *Changes to Implement Patent Term Adjustment Under Twenty Year Term; Final Rule*, 65 Fed. Reg. 54366 (Sept. 18, 2000). See also *Revision of Patent Term Extension and Patent Term Adjustment Provisions; Final Rule*, 69 Fed. Reg. 21704 (April 22, 2004), 1282 Off. Gaz. Pat. Office 100 (May 18, 2004). See also *Explanation of 37 CFR 1.703(f) and of the United States Patent and Trademark Office Interpretation of 35 U.S.C. 154(b)(2)(A)*, 69 Fed. Reg. 34283 (June 21, 2004).

The current wording of § 1.703(f) was revised in response to the misinterpretation of this provision by a number of applicants. The rule was slightly revised to more closely track the corresponding language of 35 U.S.C. 154(b)(2)(A). The relevant portion differs only to the extent that the statute refers back to provisions of the statute whereas the rule refers back to sections of the rule. This was not a substantive change to the rule nor did it reflect a change of the Office's interpretation of 35 U.S.C. 154(b)(2)(A). As stated in the *Explanation of 37 CFR 1.703(f) and of the United States Patent and Trademark Office Interpretation of 35 U.S.C. 154(b)(2)(A)*, the Office has consistently taken the position that if an application is entitled to an adjustment under the three-year pendency provision of 35 U.S.C. 154(b)(1)(B), the entire period during which the application was pending before the Office (except for periods excluded under 35 U.S.C. 154(b)(1)(B)(i)-(iii)), and not just the period beginning three years after the actual filing or commencement date of the application, is the relevant period under 35 U.S.C. 154(b)(1)(B) in determining whether periods of delay "overlap" under 35 U.S.C. 154(b)(2)(A).

This interpretation is consistent with the statute. Taken together the statute and rule provide that to the extent that periods of delay attributable to grounds specified in 35 U.S.C. 154(b)(1) and in corresponding §1.702 overlap, the period of adjustment granted shall not exceed the actual number of days the issuance of the patent was delayed. The grounds specified in these sections cover the A) guarantee of prompt Patent and Trademark Office responses, B) guarantee of no more than 3 year application pendency, and C) guarantee or adjustments for delays due to interference, secrecy orders and appeals. A section by section analysis of 35 U.S.C. 154(b)(2)(A) specifically provides that:

> Section 4402 imposes limitations on restoration of term. In general, pursuant to [35 U.S.C.] 154(b)(2)(A)-(C), total adjustments granted for restorations under [35 U.S.C. 154](b)(1) are reduced as follows: (1) To the extent that there are multiple grounds for extending the term of a patent that may exist simultaneously (e.g., delay due to a secrecy order under [35 U.S.C.] 181 and administrative delay under [35 U.S.C.] 154(b)(1)(A)), the term should not be extended for each ground of delay but only for the actual number of days that the issuance of a patent was delayed; See 145 Cong. Rec. S14,718[1]

As such, the period for over 3 year pendency does not overlap only to the extent that the actual dates in the period beginning three years after the date on which the application was filed overlap with the actual dates in the periods for failure of the Office to take action within specified time frames. In other words, consideration of the overlap does not begin three years after the filing or commencement date of the application.

In this instance, the relevant period under 35 U.S.C. 154(b)(1)(B) in determining whether periods of delay "overlap" under 35 U.S.C. 154(b)(2)(A) is the entire period during which the application was pending before the Office, September 1, 2005 to December 30, 2008(except for periods excluded under 35 U.S.C. 154(b)(1)(B)(i)-(iii)). 205 days of patent term adjustment were

---

[1] The AIPA is title IV of the Intellectual Property and Communications Omnibus Reform Act of 1999 (S. 1948), which was incorporated and enacted as law as part of Pub. L. 106-113. The Conference Report for H.R. 3194, 106th Cong. 1st Sess. (1999), which resulted in Pub. L. 106-113, does not contain any discussion (other than the incorporated language) of S. 1948. A section-by-section analysis of S. 1948, however, was printed in the Congressional Record at the request of Senator Lott, See 145 Cong. Rec. S14,708-26 (1999)(daily ed. Nov. 17, 1999).

accorded prior to the issuance of the patent for the Office failing to respond within a specified time frame. Otherwise, the Office took all actions set forth in 37 C.F.R. § 1.702(a) within the prescribed timeframes. The 205 days accorded pursuant to 37 CFR 1.702(a) overlap with the 292 days of Office delay under 37 CFR 1.702(b).

The application actually issued three years and 292 days after its commencement date. The Office did not delay 205 days and then delay an additional 292 days.

Accordingly, the proper adjustment of 292 days of patent term adjustment (not 205 days and 292 days) should have been entered because the period of delay of 205 of 292 days attributable to the delay in the issuance of the patent overlaps with the adjustment of 205 days attributable to grounds specified in § 1.702(a). Entry of both periods is not warranted. Thus, 292 days, which includes the 205 days pursuant to 37 CFR 1.702(a), is determined to be the actual number of days that the issuance of the patent was delayed.

In view thereof, the patent term adjustment indicated in the patent should have been two hundred eighteen **(218)** days (292 - 74 applicant delay).

The Office acknowledges submission of the $200.00 fee set forth in 37 CFR 1.18(e). No additional fees are required.

Patentees are given THIRTY (30) DAYS or ONE (1) MONTH, whichever is longer, from the mail date of this decision to respond to this decision. No extensions of time will be granted under § 1.136.

The application file is being forwarded to the Certificates of Correction Branch for issuance of a certificate of correction in order to rectify this error. See 35 U.S.C. § 254 and 37 CFR § 1.322. The Office will issue a certificate of correction indicating that the term of the above-identified patent is extended or adjusted by two hundred eighteen **(218)** days.

Telephone inquiries specific to this matter should be directed to Charlema Grant, Petitions Attorney, at (571) 272-3215.

Kery Fries
Senior Legal Advisor Attorney
Office of Patent Legal Administration
Office of Deputy Commissioner
For Patent Examination Policy

Day : Wednesday

PALM INTRANET

Date: 6/17/2009
Time: 12:01:23

| PTA Calculations for Application: 10/526283 | | | |
|---|---|---|---|
| Application Filing Date: | 09/01/2005 | PTO Delay (PTO): | 205 |
| Issue Date of Patent: | 12/30/2008 | Three Years: | 0 |
| Pre-Issue Petitions: | 0 | Applicant Delay (APPL): | 74 |
| Post-Issue Petitions: | 0 | Total PTA (days): | 218 |
| PTO Delay Adjustment: | 87 | | |

**File Contents History**

| Number | Date | Contents Description | PTO | APPL | START |
|---|---|---|---|---|---|
| 48 | 06/17/2009 | ADJUSTMENT OF PTA CALCULATION BY PTO | 87 | | |
| 44.5 | 12/10/2008 | PTA 36 MONTHS | | | |
| 44 | 12/30/2008 | PATENT ISSUE DATE USED IN PTA CALCULATION | | | |
| 43 | 11/27/2008 | EXPORT TO FINAL DATA CAPTURE | | | |
| 42 | 11/26/2008 | DISPATCH TO FDC | | | |
| 41 | 11/26/2008 | APPLICATION IS CONSIDERED READY FOR ISSUE | | | |
| 40 | 11/25/2008 | ISSUE FEE PAYMENT VERIFIED | | | |
| 39 | 11/25/2008 | ISSUE FEE PAYMENT RECEIVED | | | |
| 38 | 11/17/2008 | FINISHED INITIAL DATA CAPTURE | | | |
| 37 | 08/29/2008 | EXPORT TO INITIAL DATA CAPTURE | | | |
| 36 | 08/26/2008 | MAIL NOTICE OF ALLOWANCE | | | |
| 35 | 08/25/2008 | ISSUE REVISION COMPLETED | | | |
| 34 | 08/25/2008 | DOCUMENT VERIFICATION | | | |
| 33 | 08/25/2008 | NOTICE OF ALLOWANCE DATA VERIFICATION COMPLETED | | | |
| 32 | 08/25/2008 | NOTICE OF ALLOWABILITY | | | |
| 28 | 05/07/2008 | INFORMATION DISCLOSURE STATEMENT CONSIDERED | | | |
| 27 | 05/07/2008 | INFORMATION DISCLOSURE STATEMENT (IDS) FILED | | 0 | 25 |
| 26 | 06/18/2008 | DATE FORWARDED TO EXAMINER | | | |
| 25 | 05/07/2008 | RESPONSE AFTER NON-FINAL ACTION | | | |
| 24 | 05/07/2008 | INFORMATION DISCLOSURE STATEMENT (IDS) FILED | | | |
| 23 | 02/08/2008 | MAIL NON-FINAL REJECTION | | | |
| 22 | 02/04/2008 | NON-FINAL REJECTION | | | |

| | | | | | |
|---|---|---|---|---|---|
| 19 | 03/22/2006 | INFORMATION DISCLOSURE STATEMENT CONSIDERED | | | |
| 18 | 11/20/2007 | DATE FORWARDED TO EXAMINER | | | |
| 17 | 11/07/2007 | RESPONSE TO ELECTION / RESTRICTION FILED | | 74 | 15 |
| 16 | 11/07/2007 | REQUEST FOR EXTENSION OF TIME - GRANTED | | | |
| 15 | 05/25/2007 | MAIL RESTRICTION REQUIREMENT | 205 | | -1 |
| 14 | 05/24/2007 | REQUIREMENT FOR RESTRICTION / ELECTION | | | |
| 13 | 09/14/2006 | CASE DOCKETED TO EXAMINER IN GAU | | | |
| 12 | 09/12/2006 | IFW TSS PROCESSING BY TECH CENTER COMPLETE | | | |
| 11.7 | 03/22/2006 | INFORMATION DISCLOSURE STATEMENT (IDS) FILED | | | |
| 11 | 03/22/2006 | INFORMATION DISCLOSURE STATEMENT (IDS) FILED | | | |
| 10 | 02/09/2006 | CLEARED BY OIPE CSR | | | |
| 9 | 02/09/2006 | CLEARED BY OIPE CSR | | | |
| 8 | 02/08/2006 | CLEARED BY OIPE CSR | | | |
| 7 | 09/01/2005 | 371 COMPLETION DATE | | | |
| 6 | 01/26/2006 | APPLICATION DISPATCHED FROM OIPE | | | |
| 5 | 01/26/2006 | NOTICE OF DO/EO ACCEPTANCE MAILED | | | |
| 4 | 09/01/2005 | ADDITIONAL APPLICATION FILING FEES | | | |
| 3 | 09/01/2005 | A STATEMENT BY ONE OR MORE INVENTORS SATISFYING THE REQUIREMENT UNDER 35 USC 115, OATH OF THE APPLIC | | | |

**Search Another: Application#** [ ] Search

**EXPLANATION OF PTA CALCULATION**

**EXPLANATION OF PTE CALCULATION**

To go back, right click here and select Back. To go forward, right click here and select Forward. To refresh, right click here and select Refresh.

Back to OASIS | Home page

UNITED STATES PATENT AND TRADEMARK OFFICE

# CERTIFICATE OF CORRECTION

PATENT : 7,470,792 B2

DATED : December 30, 2008

INVENTOR(S) : Koch et al.

It is certified that error appears in the above-identified patent and that said Letters Patent is hereby corrected as shown below:

On the cover page,

[*] Notice: Subject to any disclaimer, the term of this patent is extended or adjusted under 35 USC 154(b) by (131) days

Delete the phrase "by 131 days" and insert – by 218 days--

UNITED STATES PATENT AND TRADEMARK OFFICE

Commissioner for Patents
United States Patent and Trademark Office
P.O. Box 1450
Alexandria, VA 22313-1450
www.uspto.gov

MAILED
FROM DIRECTOR'S OFFICE

JUN 12 2006

TECHNOLOGY CENTER 3600

REED SMITH LLP
1301 K STREET N.W.
SUITE 1100 EAST TOWER
WASHINGTON, DC 20005

| | | |
|---|---|---|
| In re application of<br>Llian Vladimirov Milinov et al.<br>Application No. 10/526,310<br>Filed: March 02, 2005<br>For: ITEM OF TRANSFORMABLE FURNITURE | :<br>:<br>:<br>: | **DECISION ON PETITION TO MAKE SPECIAL (ACCELERATED EXAMINATION)** |

This is in response to the petition filed on March 02, 2005 to make the above-identified application special on the basis of special examining procedure for certain new applications - accelerated examination as set forth in MPEP § 708.02 VIII.

The requirements for granting special status under this section are: (A) a petition to make special accompanied by the fee set forth in 37 CFR 1.17(h); (B) all claims being directed to a single invention, or an election without traverse if the Office determines that all the claims are not directed to a single invention; (C) a statement that a pre-examination search was made listing the field of search; (D) one copy of each of the references deemed most closely related to the subject matter encompassed by the claims if said references are not already of record; and (E) a detailed discussion of how the claimed subject matter is patentable over the references in accordance with 37 CFR 1.111 (b) and (c).

The petition fails to adequately meet requirements (B) above. In this regard, item (B) is not met because the petition fails to include an election without traverse, or a statement that applicants are willing to elect without traverse should a restriction or election be required.

For the above stated reasons, the petition is **DISMISSED**.

Petitioner is given one more opportunity to perfect the petition. Any request for reconsideration must be filed within TWO MONTHS of the date of this decision. Extensions of time under 37 CFR 1.136(a) are permitted.
Applicant should promptly submit a renewed petition to the Commissioner of Patents and Trademarks, Washington, D.C. 20231. The envelope should indicate that the correspondence be brought to the attention of Technology Center 3600.

Until the renewed petition is submitted, the application will be returned to the examiner's docket to await treatment on the merits in the normal order of examination.

Kenneth J. Dorner
Special Programs Examiner
Technology Center 3600
(571) 272-6587

KJD/slb: 06/08/06

UNITED STATES PATENT AND TRADEMARK OFFICE

Commissioner for Patents
United States Patent and Trademark Office
P.O. Box 1450
Alexandria, VA 22313-1450
www.uspto.gov

MAILED
FROM DIRECTORS OFFICE

OCT 03 2006

TECHNOLOGY CENTER 3600

REED SMITH LLP
1301 K STREET N.W.
SUITE 1100 EAST TOWER
WASHINGTON, DC 20005

| | | |
|---|---|---|
| In re application of | : | **DECISION ON PETITION** |
| Llian Vladimirov Milinov et al. | : | **TO MAKE SPECIAL** |
| Application No. 10/526,310 | : | **(ACCELERATED** |
| Filed: March 02, 2005 | : | **EXAMINATION)** |
| For: ITEM OF TRANSFORMABLE FURNITURE | | |

This is in response to the renewed petition filed on June 29, 2006 to make the above-identified application special on the basis of special examining procedure for certain new applications - accelerated examination as set forth in MPEP § 708.02 VIII.

The requirements for granting special status under this section are: (A) a petition to make special accompanied by the fee set forth in 37 CFR 1.17(i); (B) all claims being directed to a single invention, or an election without traverse if the Office determines that all the claims are not directed to a single invention; (C) a statement that a pre-examination search was made listing the field of search; (D) one copy of each of the references deemed most closely related to the subject matter encompassed by the claims if said references are not already of record; and (E) a detailed discussion of how the claimed subject matter is patentable over the references in accordance with 37 CFR 1.111 (b) and (c).

Since all of the requirements for special status under MPEP § 708.02 VIII have been met, the petition is **GRANTED**.

The examiner is directed (1) to make an interference search for possible interfering applications, (2) to promptly examine this application out of turn, and (3) if any interfering application is discovered, to examine such application simultaneously and state in the first official letter of such application that it is being taken out of turn because of a possible interference.

Petitioner is advised that this application will continue to be special, throughout its entire prosecution and pendency, including interference or appeal, if any, only if petitioner makes a prompt ***bona fide*** effort, in response to each Office action, to place the application in condition for allowance, even if it is necessary to conduct an interview with the examiner to accomplish this purpose.

**SUMMARY**: Petition to Make Special **GRANTED.**

Kenneth J. Dorner
Special Programs Examiner
Technology Center 3600
(571) 272-6587

KJD/slb: 08/14/06

UNITED STATES PATENT AND TRADEMARK OFFICE

Commissioner for Patents
United States Patent and Trademark Office
P.O. Box 1450
Alexandria, VA 22313-1450
www.uspto.gov

Date : July 14, 2009

Patent No. :7375619
Inventor(s) :Micha Auerbach et al.
Issued :May 20, 2008
Title :SMART CONTAINER MONITORING SYSTEM

Re: Request for Certificate of Correction

Consideration has been given your request for the issuance of a certificate of correction for the above-identified patent under the provisions of 37 CFR 1.322 and/or 1.323.

Assignees' names and addresses (assignment data) printed in a patent are based *solely* on information supplied in the appropriate space for identifying the assignment data, i.e., item 3 of the Fee(s) Transmittal Form PTOL-85B. After payment of the issue fee, correction of assignment data submitted on the PTOL-85B can only be done by Certificate of Correction under 37 CFR 1.323, with a request under 37 CFR 3.81(b).

A request for a patent to be corrected to state the name of the assignee must:

A. state that the assignment was submitted for recordation as set forth in 37 CFR 3.11 before issuance of the patent;

B. include a request for a certificate of correction under 37 CFR 1.323 along with the fee set forth in 37 CFR 1.20(a); and

C. include the processing fee set forth in 37 CFR 1.17(i).

If the request is granted, Certificates of Correction Branch will be notified that a Certificate of Correction may be issued.

See Manual of Patent Examining Procedure, Section 1481.01 (Rev. 3) (Oct. 2005).

*Applicant has not included items A and or C above, accordingly, the request for Certificate of Correction to add or change the assignee data is dismissed.*

Any request under 37 CFR 3.81(b) should be directed to the following address or facsimile number:

By mail: Mail Stop PETITIONS
Commissioner for Patents
Post Office Box 1450
Alexandria, VA 22313-1450

| | |
|---|---|
| By hand: | Customer Service Window<br>Randolph Building<br>401 Dulany Street<br>Alexandria, VA 22314 |
| By fax: | 571-273-8300<br>ATTN: Office of Petitions |
| EFS web | uspto.gov/ebc/index.html<br>(must be registered as an e-filer to submit responses)<br>Technical Support 1-866-217-9197 |

Any inquiry concerning this communication should be directed to Ms. A. Green at (703) 756-1541.

Mary Diggs, Supervisor
Decisions & Certificates
of Correction Branch
(703) 756-1580 or (703) 756- 1544

ABELMAN, FRAYNE 7 SCHWAB
666 Third Avenue
New York, New York 10017

/arg

## SPE RESPONSE FOR CERTIFICATE OF CORRECTION

**Paper No.:** _____

**DATE** : 08-05-09

**TO SPE OF** : ART UNIT 2612

**SUBJECT** : Request for Certificate of Correction for Appl. No.: 10/526318 Patent No.: 7375619

Please respond to this request for a certificate of correction within 7 days.

**FOR IFW FILES:**

Please review the requested changes/corrections as shown in the **COCIN** document(s) in the IFW application image. No new matter should be introduced, nor should the scope or meaning of the claims be changed.

Please complete the response (see below) and forward the completed response to scanning using document code **COCX**.

**FOR PAPER FILES:**

Please review the requested changes/corrections as shown in the attached certificate of correction. Please complete this form (see below) and forward it with the file to:

**Certificates of Correction Branch (CofC)**
**South Tower - 9A22**
**Palm Location 7580**

A Green

**Angela Green**
**Certificates of Correction Branch**
**703-756-1541**

**Thank You For Your Assistance**

**The request for issuing the above-identified correction(s) is hereby:**
Note your decision on the appropriate box.

- [x] **Approved** — **All** changes apply.
- [ ] **Approved in Part** — Specify below which changes **do not** apply.
- [ ] **Denied** — State the reasons for denial below.

**Comments:** OK for the certificate

Daniel Wu

DANIEL WU
SUPERVISORY PATENT EXAMINER

SPE

2612
Art Unit

UNITED STATES PATENT AND TRADEMARK OFFICE

Commissioner for Patents
United States Patent and Trademark Office
P.O. Box 1450
Alexandria, VA 22313-1450
www.uspto.gov

ABELMAN, FRAYNE & SCHWAB
666 THIRD AVENUE, 10TH FLOOR
NEW YORK NY 10017

COPY MAILED

DEC 17 2009

OFFICE OF PETITIONS

| | | |
|---|---|---|
| In re Patent No. 7,375,619 | : | |
| Issue Date: May 20, 2008 | : | |
| Application 10/526,318 | : | ON PETITION |
| Filed: August 12, 2005 | : | |
| Attorney Docket No. **206,888** | : | |

This is a decision on the petition filed August 10, 2009, which is being treated as a request under 37 CFR 3.81(b)[1] to correct the name of the assignee on the front page of the above-identified patent by way of a Certificate of Correction.

The request is **GRANTED**.

Petitioner states that the correct assignee's name is "Hi-G-Tek Inc." and that the incorrect assignee's name was included on the Fee(s) Transmittal form PTOL-85(b) at the time of payment of the issue fee. Accordingly, petitioner requests that a certificate of correction be issued to reflect the correct assignee on the front page of the Letters Patent in the patent to be issued from the application.

[1] *See* MPEP 1309, subsection II; and Official Gazette of June 22, 2004.

37 CFR 3.81(b), effective June 25, 2004, reads:

> *After payment of the issue fee:* Any request for issuance of an application in the name of the assignee submitted after the date of payment of the issue fee, and any request for a patent to be corrected to state the name of the assignee, must state that the assignment was submitted for recordation as set forth in § 3.11 before issuance of the patent, and must include a request for a certificate of correction under § 1.323 of this chapter (accompanied by the fee set forth in § 1.20(a) and the processing fee set forth in § 1.17(i) of this chapter.

The request was accompanied by a certificate of correction (and fee) as required by 3.81(b). Further, Office assignment records reflect that "Hi-G-Tek Inc." is the assignee of record. Accordingly, as the request complies with the provisions of 37 CFR 3.81(b), it would be appropriate for a certificate of correction to be processed after issuance of this application into a patent.

Telephone inquiries concerning this decision may be directed to the JoAnne Burke at (571) 272-4584. Inquiries regarding the issuance of a certificate of correction should be directed to the Certificate of Correction Branch at (571) 272-4200.

As authorized, the $130 fee for the petition under 37 CFR 3.81(b) and $100 fee for Request for Certificate of Correction has been assessed to petitioner's deposit account.

The Certificates of Correction Branch will be notified of this decision granting the petition under 37 CFR 3.81(b) and directing issuance of the requested Certificate of Correction.

JoAnne Burke
Petitions Examiner
Office of Petitions

22 SEP 2005

UNITED STATES PATENT AND TRADEMARK OFFICE

Commissioner for Patents
United States Patent and Trademark Office
P.O. Box 1450
Alexandria, VA 22313-1450
www.uspto.gov

Laurence P. Colton
Technoprop Colton, LLC
P.O. Box 567685
Atlanta, GA 31156-7685

In re Application of
ALONSO, et al.
Application No.: 10/526,319
PCT No.: PCT/US03/13434
Int. Filing Date: 30 April 2003
Priority Date: 30 April 2002
Atty. Docket No.: 21506.003USA
For: SECURITY AND PROPERTY MANAGEMENT SYSTEM

DECISION ON PETITION

UNDER 37 CFR 1.137(b)

The petition to revive under 37 CFR 1.137(b) filed 25 February 2005 in the above-captioned application is hereby **GRANTED** as follows:

Applicant's statement that "the entire delay in filing the required reply from the due date for the required reply until the filing of a grantable petition under 37 CFR 1.137(b) was unintentional" and the prompt filing of the petition satisfies the requirement of 37 CFR 1.137(b)(3).

A review of the application file reveals that applicant has now provided payment of the full, U.S. Basic National Fee. Therefore, the request to revive the application abandoned under 35 U.S.C. 371(d) is granted as to the National stage in the United States of America. Further, a review of the application file reveals that all of the requirements of 35 U.S.C. 371 for entry into the national stage in the United States have been satisfied.

The application has an international filing date of 30 April 2003 under 35 U.S.C. 363 and will be given a date of **25 February 2005** under 35 U.S.C. 371(c)(1), (c)(2) and (c)(4).

This application is being returned to the United States Designated/Elected Office (DO/EO/US) for treatment in accordance with this decision.

Derek A. Putonen
Attorney Advisor
Office of PCT Legal Administration
Tel: (571) 272-3294
Fax: (571) 273-0459

UNITED STATES PATENT AND TRADEMARK OFFICE

Commissioner for Patents
United States Patent and Trademark Office
P.O. Box 1450
Alexandria, VA 22313-1450
www.uspto.gov

**MORRISON & FOERSTER LLP**
**755 PAGE MILL RD**
**PALO ALTO CA 94304-1018**

COPY MAILED

SEP 2 4 2007

OFFICE OF PETITIONS

In re Application of
**FOERSTER,** Marcel
Application No. 10/526,336
Filed: November 03, 2005
Attorney Docket No. **220772011700**

DECISION ON PETITION TO WITHDRAW FROM RECORD

This is a decision on the Request to Withdraw as attorney or agent of record under 37 C.F.R. § 1.36(b), filed August 17, 2007.

The request is **NOT APPROVED** as moot.

A review of the file record indicates that the power of attorney to MORRISON & FOERSTER LLP has been revoked by the assignee of the patent application on September 04, 2007. Accordingly, the request to withdraw under 37 C.F.R. § 1.36(b) is moot.

All future communications from the Office will continue to be directed to the below-listed address until otherwise notified by applicant.

Telephone inquires concerning this decision should be directed to Tredelle Jackson at 571-272-2783.

Monida A. Graves
Petitions Examiner
Office of Petitions

cc: **WOMBLE CARLYLE SANDRIDGE & RICE, PLLC**
**ATTN: PATENT DOCKETING 32ND FLOOR**
**P.O. BOX 7037**
**ATLANTA, GA 30357-0037**

22 DEC 2005

UNITED STATES PATENT AND TRADEMARK OFFICE

Commissioner for Patents
United States Patent and Trademark Office
P.O. Box 1450
Alexandria, VA 22313-1450
www.uspto.gov

Michael J. Herman
Mineral Technologies Inc.
One Highland Avenue
Bethlehem, PA 18017

In re Application of
ERDMAN, Gerald D.
Application No.: 10/526,342
PCT No.: PCT/US02/19263
Int. Filing Date: 18 June 2002
Priority Date: None
Attorney Docket No.: DN99-009
For: PROCESS FOR THE PRODUCTION OF PRECIPITATED CALCIUM CARBONATES AND . . .

DECISION ON PETITION
UNDER 37 CFR 1.137(b)

The petition to revive under 37 CFR 1.137(b) filed 02 March 2005 in the above-captioned application is hereby **GRANTED** as follows:

Applicant's statement that "the entire delay in filing the required reply from the due date for the reply until the filing of a grantable petition under 37 CFR 1.137(b) was unintentional" meets the requirements of 37 CFR 1.137(b)(3).

A review of the application file reveals that applicant has submitted the basic national fee and the requirements of 37 CFR 1.137(b) have been satisfied. Therefore, the request to revive the application abandoned under 35 U.S.C. 371(d) is granted as to the National stage in the United States of America.

This application is being returned to the United States Designated/Elected Office for processing in accordance with this decision.

Anthony Smith

Anthony Smith
Attorney-Advisor
Office of PCT Legal Administration
Tel: (571) 272-3298
Fax: (571) 273-0459

28 OCT 2005

UNITED STATES PATENT AND TRADEMARK OFFICE

Commissioner for Patents
United States Patent and Trademark Office
P.O. Box 1450
Alexandria, VA 22313-1450
www.uspto.gov

Michael J. Herman
Minerals Technologies Inc
One Highland Avenue
Bethlehem PA 18017

| | |
|---|---|
| In re Application of<br>DIMMICK et al.<br>Application No.: 10/526,343<br>PCT No.: PCT/US01/49721<br>Int. Filing: 20 December 2001<br>Priority Date: None<br>Attorney Docket No.: DN 00-047<br>For: HIGH GLOSS CALCIUM CARBONATE COATING COMPOSITIONS AND COATED PAPER AND PAPER BOARD MANUFACTURED FROM SAME: | DECISION ON<br>PETITION UNDER<br>37 CFR 1.137(b) |

The petition to revive under 37 CFR 1.137(b) filed 02 March 2005 in the above-captioned application is hereby **GRANTED** as follows:

Applicant's statement that the "entire delay in filing the required reply from the due date for the required reply until the filing of a grantable petition under 37 CFR 1.137(b) was unintentional" meets the requirements of 37 CFR 1.137(b)(3).

A review of the application file reveals that the basic national fee of $300 has been provided. The required petition fee of $1500 was also paid. Thus, the requirements of 37 CFR 1.137(b) have been satisfied. Therefore, the request to revive the application abandoned under 35 U.S.C. 371(d) is granted as to the National stage in the United States of America.

This application is being forwarded to the United States Designated/Elected Office for further processing. The 35 U.S.C. 371(c)(1), (c)(2) and (c)(4) date is 02 March 2005.

Cynthia M. Kratz
Attorney Advisor
Office of PCT Legal Administration

Telephone: 571-272-3286
Facsimile: 571-273-0459

UNITED STATES PATENT AND TRADEMARK OFFICE

UNITED STATES DEPARTMENT OF COMMERCE
United States Patent and Trademark Office
Address: COMMISSIONER FOR PATENTS
P.O. Box 1450
Alexandria, Virginia 22313-1450
www.uspto.gov

| APPLICATION NO. | FILING DATE | FIRST NAMED INVENTOR | ATTORNEY DOCKET NO. | CONFIRMATION NO. |
|---|---|---|---|---|
| 10/526,359 | 10/18/2005 | Kaoru Koike | SON-2811 | 8957 |

7590 02/11/2008
RADER FISHMAN & GRAUER PLLC
LION BUILDING
1233 20TH STREET N.W., SUITE 501
WASHINGTON, DC 20036

| EXAMINER |
|---|
| WHITMORE, STACY |

| ART UNIT | PAPER NUMBER |
|---|---|
| 2825 | |

| MAIL DATE | DELIVERY MODE |
|---|---|
| 02/11/2008 | PAPER |

## DECISION DISMISSING PETITION UNDER 37 CFR 1.138(d)

*The declaration of express abandonment will not be recognized*

This is in response to the petition under 37 CFR 1.138(d), requesting for a refund of any previously paid search fee and excess claims fee in the above-identified application.

The petition is dismissed.

The express abandonment will **not** be recognized for the reason(s) indicated below:

1. ☐ The petition was not filed in sufficient time to permit the appropriate officials to recognize the abandonment before an examination has been made of the application. See 37 CFR 1.138(d).

2. ☐ The petition was not signed by a party authorized by 37 CFR 1.33(b)(1), (3) or (4).

3. ☒ The application is not an application filed under 35 U.S.C. 111(a) on or after December 8, 2004.

4. ☐ The petition for express abandonment under 1.138(d) is dismissed because the applicant did not pay any search fee and excess claims fees in the above-identified application.

Telephone inquiries should be directed to the Office of Data Management at (571) 272-4200.

Patent Publication Branch
Office of Data Management



FORM PET651D (Rev. 08/07)

UNITED STATES PATENT AND TRADEMARK OFFICE

UNITED STATES DEPARTMENT OF COMMERCE
United States Patent and Trademark Office
Address: COMMISSIONER FOR PATENTS
P.O. Box 1450
Alexandria, Virginia 22313-1450
www.uspto.gov

YOUNG & THOMPSON
209 Madison Street
Suite 500
Alexandria, VA 22314

Mail Date: 06/01/2010

| | | |
|---|---|---|
| **Applicant** | : Janne Liimatainen | : DECISION ON REQUEST FOR |
| **Patent Number** | : 7630496 | : RECALCULATION of PATENT |
| **Issue Date** | : 12/08/2009 | : TERM ADJUSTMENT IN VIEW |
| **Application No** | : 10/526,363 | : OF WYETH AND NOTICE OF INTENT TO |
| **Filed** | : 03/02/2005 | : ISSUE CERTIFICATE OF CORRECTION |
| | | : |

The Request for Recalculation is **GRANTED** to the extent indicated.

The patent term adjustment has been determined to be **978** days. The USPTO will *sua sponte* issue a certificate of correction reflecting the amount of PTA days determined by the recalculation.

Prior to the issuance of the certificate of correction, the USPTO will afford patentee an opportunity to be heard and request reconsideration. Accordingly, patentee has **one month or thirty (30) days**, whichever is longer, to file a request for reconsideration of this patent term adjustment calculation. See 35 U.S.C. 154(b)(3)(B)(ii) and 37 CFR 1.322(a)(4). No extensions of time will be granted under 37 CFR 1.136.

Patentee should use document code PET.OP if electronically filing a request for reconsideration of this patent term adjustment calculation. The patentee must also include the information required by 37 CFR 1.705(b)(2) and the fee required by 37 CFR 1.18(e). If patentee does not file a timely request for reconsideration of this patent term adjustment calculation including the information required by 37 CFR 1.705(b)(2) and the fee required by 37 CFR 1.18(e), the USPTO will issue a certificate of correction reflecting the PTA determination noted above.

Patentee should be aware that in order to preserve the right to review in the United States District Court for the District of Columbia of the USPTO patent term adjustment determination, patentee must ensure that he or she also take the steps required under 35 U.S.C. 154(b)(4)(A) in a timely manner. Nothing in the request for recalculation should be construed as providing an alternative time frame for commencing a civil action under 35 U.S.C. 154(b)(4)(A).

Any questions concerning this decision should be directed to the Office of Patent Legal Administration at 571-272-7702.

UNITED STATES PATENT AND TRADEMARK OFFICE

UNITED STATES DEPARTMENT OF COMMERCE
United States Patent and Trademark Office
Address: COMMISSIONER FOR PATENTS
P.O. Box 1450
Alexandria, Virginia 22313-1450
www.uspto.gov

| APPLICATION NO. | FILING DATE | FIRST NAMED INVENTOR | ATTORNEY DOCKET NO. | CONFIRMATION NO. |
|---|---|---|---|---|
| 10/526,369 | 03/03/2005 | Iwao Katsuyama | 1422-0666PUS1 | 6217 |

2292 7590 03/19/2008
BIRCH STEWART KOLASCH & BIRCH
PO BOX 747
FALLS CHURCH, VA 22040-0747

| EXAMINER |
|---|
| ARCHIE, NINA |

| ART UNIT | PAPER NUMBER |
|---|---|
| 1645 | |

| NOTIFICATION DATE | DELIVERY MODE |
|---|---|
| 03/19/2008 | ELECTRONIC |

**Please find below and/or attached an Office communication concerning this application or proceeding.**

The time period for reply, if any, is set in the attached communication.

Notice of the Office communication was sent electronically on above-indicated "Notification Date" to the following e-mail address(es):

mailroom@bskb.com

UNITED STATES PATENT AND TRADEMARK OFFICE

Commissioner for Patents
United States Patent and Trademark Office
P.O. Box 1450
Alexandria, VA 22313-1450
www.uspto.gov

MAR 1 9 2008

Gerald M Murphy Jr.
BIRCH STEWART KOLASCH & BIRCH
PO BOX 747
FALLS CHURCH, VA 22040-074

| | |
|---|---|
| In re Application of: | |
| Katsuyama et al. | SUSPENSION OF ACTION |
| Serial No.: 10/526,369 | |
| Filed: March 03, 2005 | |
| Attorney Docket No.: 1422-0666PUS1 | |

This is in reply to the petition under 37 CFR 1.103 to suspend action in this application at applicant's request for a period of six months, filed January 24, 2008.

**The petition fee of $200.00 will be charged to applicants' Deposit Account 02-2448, as directed.**

BACKGROUND

Applicants request prosecution in this application be suspended for a period of six months in order to conduct and complete experiments in order to show unexpected results via a declaration to overcome a rejection.
DISCUSSION

**§ 1.103 Suspension of action by the Office.**

(a) Suspension for cause . On request of the applicant, the Office may grant a suspension of action by the Office under this paragraph for good and sufficient cause. The Office will not suspend action if a reply by applicant to an Office action is outstanding. Any petition for suspension of action under this paragraph must specify a period of suspension not exceeding six months. Any petition for suspension of action under this paragraph must also include:
(1) A showing of good and sufficient cause for suspension of action; and
(2) The fee set forth in § 1.17(h), unless such cause is the fault of the Office.

Applicants have replied to the final Office action of September 24, 2007 by filing arguments concurrently with this petition. Applicants have also indicated that a suspension period of six months is necessary in order to gather comparison data to show unexpected results. However, prosecution is now closed. As the case is under final rejection, applicant's reply under 37 CFR 1.113 to this action is limited either to an appeal to the Board of Patent Appeals and Interferences or to an amendment complying with the requirements set forth below.

If applicant should desire to appeal any rejection made by the examiner, a Notice of Appeal must be filed within the period for reply identifying the rejected claim or claims appealed. The Notice of Appeal must be accompanied by the required appeal fee.
If applicant should desire to file an amendment, entry of a proposed amendment after

final rejection cannot be made as a matter of right unless it merely cancels claims or complies with a formal requirement made earlier. Amendments touching the merits of the application which otherwise might not be proper may be admitted upon a showing a good and sufficient reasons why they are necessary and why they were not presented earlier. A reply under 37 CFR 1.113 to a final rejection must include the appeal from, or cancellation of, each rejected claim. The filing of an amendment after final rejection, whether or not it is entered, does not stop the running of the statutory period for reply to the final rejection unless the examiner holds the claims to be in condition for allowance. Accordingly, if a Notice of Appeal has not been filed properly within the period for reply, or any extension of this period obtained under either 37 CFR 1.136(a) or (b), the application will become abandoned.

DECISION

In view of the above reason, the petition is **DENIED**.

Any request for reconsideration of this decision must be filed within two months of the date of this decision. Extension of this time is governed by 37 CFR 1.136(a).

Should there be any questions about this decision please contact Marianne C. Seidel by letter addressed to Director, TC 1600, at the address listed above, or by telephone at 571-272-0584 or by facsimile sent to the general Office facsimile number, 703-872-9306.

Marianne C. Seidel
Quality Assurance Specialist/Program Examiner
Technology Center 1600

UNITED STATES PATENT AND TRADEMARK OFFICE

DEC - 4 2006

Commissioner for Patents
United States Patent and Trademark Office
P.O. Box 1450
Alexandria, VA 22313-1450
www.uspto.gov

OMRI M. BEHR
325 PIERSON AVENUE
EDISON NJ 08837-3123

| | |
|---|---|
| In re Application of | : |
| Leonard Mackles et al | : |
| Serial No.: 10/526,386 | : PETITION TO MAKE SPECIAL |
| Filed: February 28, 2005 | : |
| Attorney Docket No.: CHAV3.0-032 | : |

This is in response to the petition filed November 28, 2006, to make the above-identified application special under the provisions of 37 CFR 1.102(c), based on the age of the applicant.

Applicant has satisfied the provisions set forth in M.P.E.P. 708.02, IV. Therefor the petition is **GRANTED**.

**The application will be forwarded to the examiner for action on the merits commensurate with this decision.**

Should there be any questions with regard to this letter please contact William R. Dixon, Jr. by letter addressed to the Director, Technology Center 1600, PO BOX 1450, ALEXANDRIA, VA 22313-1450, or by telephone at 571-272-0519 or by facsimile transmission to the general Office facsimile number, 571-273-8300.

William R. Dixon, Jr.
Special Program Examiner
Technology Center 1600

UNITED STATES PATENT AND TRADEMARK OFFICE

Commissioner for Patents
United States Patent and Trademark Office
P.O. Box 1450
Alexandria, VA 22313-1450
www.uspto.gov

**KENNAMETAL INC.**
**P.O. BOX 231**
**1600 TECHNOLOGY WAY**
**LATROBE, PA 15650**

**COPY MAILED**

FEB 0 6 2008

**OFFICE OF PETITIONS**

| | | |
|---|---|---|
| In re Application of | : | |
| Gregory A. HYATT et al. | : | |
| Application No. 10/526,413 | : | DECISION ON PETITION |
| Filed: October 05, 2005 | : | |
| Attorney Docket No. K-1920PCUS | : | |

This is a decision on the petition under the unintentional provisions of 37 CFR 1.137(b), filed November 15, 2007, to revive the above-identified application.

The petition is **GRANTED**.

The application became abandoned for failure to reply in a timely manner to the non-final Office action mailed, March 27, 2007, which set a shortened statutory period for reply of three (3) months. No extension of time under the provisions of 37 CFR 1.136(a) was obtained. Accordingly, the application became abandoned on June 28, 2007.

The petition satisfies the conditions for revival pursuant to the provisions of 37 CFR 1.137(b) in that (1) the reply in the form of an amendment; (2) the petition fee of $1540.00; and (3) the required statement of unintentional delay have been received. Accordingly, the reply to the non-final Office action of March 27, 2007, is accepted as having been unintentionally delayed.

Telephone inquiries concerning this decision should be directed to the undersigned at (571) 272-4231.

The application file is being referred to Technology Center AU 3722 for appropriate action on the concurrently filed amendment.

Michelle R. Eason
Paralegal Specialist
Office of Petitions

Cc: **PETER J. RASHID**
**5111 MOUNTAIN ROAD**
**BRIGHTON, MI 48116**

# UNITED STATES PATENT AND TRADEMARK OFFICE

UNITED STATES DEPARTMENT OF COMMERCE
United States Patent and Trademark Office
Address: COMMISSIONER FOR PATENTS
P.O. Box 1450
Alexandria, Virginia 22313-1450
www.uspto.gov

| APPLICATION NO. | FILING DATE | FIRST NAMED INVENTOR | ATTORNEY DOCKET NO. | CONFIRMATION NO. |
|---|---|---|---|---|
| 10/526,416 | 03/02/2005 | Matthew M Terry | 3053.136.US | 3094 |

26474 7590 02/29/2008
NOVAK DRUCE DELUCA + QUIGG LLP
1300 EYE STREET NW
SUITE 1000 WEST TOWER
WASHINGTON, DC 20005

| EXAMINER |
|---|
| JOHNSON, STEPHEN |

| ART UNIT | PAPER NUMBER |
|---|---|
| 3641 | |

| MAIL DATE | DELIVERY MODE |
|---|---|
| 02/29/2008 | PAPER |

**Please find below and/or attached an Office communication concerning this application or proceeding.**

The time period for reply, if any, is set in the attached communication.

UNITED STATES PATENT AND TRADEMARK OFFICE

Commissioner for Patents
United States Patent and Trademark Office
P.O. Box 1450
Alexandria, VA 22313-1450
www.uspto.gov

MAILED
FROM DIRECTORS OFFICE

FEB 29 2008

TECHNOLOGY CENTER 3600

NOVAK DRUCE DELUCA & QUIGG LLP
1300 EYE STREET NW
SUITE 1000 WEST TOWER
WASHINGTON DC 20005

| | | |
|---|---|---|
| In re Application of<br>Matthew M. TERRY<br>Application No. 10/526,416<br>Filed: March 2, 2005<br>For: BLAST AND BALLISTIC PROTECTION SYSTEMS AND METHODS OF MAKING SAME | :<br>:<br>:<br>:<br>:<br>:<br>: | DECISION ON PETITION TO REVIEW RESTRICTION REQUIREMENT UNDER 37 CFR 1.144 |

This is in response to the petition filed on February 1, 2008 for withdrawal of the restriction requirement mailed on March 2, 2006.

The petition is **DISMISSED**.

FACTS

On March 2006, the examiner made a requirement for an election of species.

On May 1, 2006, applicant filed an election and identified claims directed to that election. It is noted that the applicant did not provide any argument traversing the requirement.

On May 11, 2006, the examiner mailed a non-final office action withdrawing claims originally identified as being directed to the non-elected groups. The claims at question are 10-14 and 15/(1-6). It is noted that claim 15/7 was not withdrawn. The examiner further noted that a specific feature of claim 12 was not in the elected embodiment. It is noted that claims 13 and 14 depend from claim 12.

On October 13, 2006, applicant amended the specification to apparently provide support for claim 12 in the elected embodiment.

On March 20, 2007, the examiner mailed a second non-final action which included rejections of claims 12-14. The examiner indicated that claims 10-11 and 15 were withdrawn since the features of the claims were not shown in the elected embodiment. Specifically, the examiner indicated that the elected embodiment does not disclose leg members or an open cell foam as claimed.

In a response filed July 22, 2007, applicant requests reinstatement of claims 10, 11 and 15 by merely referring to figure 4.

On October 1, 2007, the examiner made the election of species final and indicated that "nothing in figure 4 has been described as a leg member nor are leg members necessarily inherent to truss unit 26 as disclosed by applicant".

On February 1, 2008, the instant petition was filed. In this petition, applicant provides a marked up copy of figure 4 with an arrow pointing generally to the truss structure as "leg members" and an arrow pointing to the bottom layer as "open cell foam".

## DISCUSSION

Upon reviewing the specification, no mention of leg members (claim 10), the leg members being solid or hollow or a combination thereof (claim 11) or an open cell having hollow or solid ligaments or combinations thereof (claim 15) have been found with respect to figure 4. Furthermore, a text search of the pre-grant publication of this application failed to find the terms "leg" or "ligaments" anywhere but the above mentioned claims.

The examiner had pointed out that the truss member of figure 4, does not inherently imply that leg members are present. Applicant has not contested this argument. The fact that applicant points to the truss member for support of the legs does not aid in determining what specifically is being considered a "leg". Also, the presentation of claim 8 directed to just a truss member and the further limitation of claim 10 of a leg within the truss member implies that the truss member being claimed does not inherently require legs. Furthermore, hollow or solid legs or ligaments are simply not disclosed nor supported in the elected embodiment.

## DECISION

Other than pointing to figure 4, applicant has not provided any arguments supporting the claim that the features of the claims at question are present in the elected embodiment.

Applicants petition is DISMISSED.

Any question concerning this decision should be referred to SPE Michael Carone at 571-272-6873.

Donald Hajec
Director, TC 3600
TR

United States Patent and Trademark Office

Commissioner for Patents
United States Patent and Trademark Office
P.O. Box 1450
Alexandria, VA 22313-1450
www.uspto.gov

GWIPS
PETER T. KWON
P.O. BOX 231630
CENTERVILLE, VA 20120

19 MAR 2007

| | | |
|---|---|---|
| In re Application of | : | |
| Chang et al. | : | |
| Application No.: 10/526,426 | : | |
| PCT No.: PCT/KR03/01694 | : | |
| Int. Filing Date: 22 August 2003 | : | DECISION |
| Priority Date: 04 September 2002 | : | |
| Attorney Docket No.: P5089/JRIM | : | |
| For: Electronic Toilet And Flushing System | : | |

This is in response to the "Request To Change Primary Inventor" filed on 10 January 2006, the "Request To Add The Primary Inventor's Name" filed on 18 September 2006, and the "Request To Withdraw The Petition" filed on 24 February 2007.

## BACKGROUND

This international application was filed on 22 August 2003, claimed an earlier priority date of 04 September 2002, and designated the U.S. The International Bureau transmitted a copy of the published international application to the USPTO on 18 March 2004. The 30 month time period for paying the basic national fee in the United States expired at midnight on 04 March 2005. Applicants filed *inter alia* the basic national fee on 02 March 2005. Also filed on 02 March 2005 was a declaration nominating Mr. Lim.

On 08 September 2005, applicants filed a declaration nominating Mr. Chang and Mr. Lim.

On 14 September 2005, a Notice of Acceptance (Form PCT/DO/EO/903) was mailed, indicating the date of this application under 35 U.S.C. 371(c)(1), (2) and (4) to be "03/02/2005."

## DISCUSSION

Review of the record reveals that the declaration filed on 02 March 2005 was defective because it did not nominate one of the inventors (Mr. Chang) who was named in the published international application, and because the application file includes no evidence that he was removed as an inventor pursuant to PCT Rule 92*bis*. Therefore, the Notice of Acceptance (Form PCT/DO/EO/903) mailed on 14 September 2005 was issued erroneously, and it is hereby **VACATED**.

The "Request To Change Primary Inventor" filed on 10 January 2006 requests in effect that Mr. Chang be the first-named inventor, while the "Request To Withdraw The Petition" filed on 24 February 2007 seeks to withdraw the "Petition" filed on 10 January 2006. Since Mr. Chang is already the first-named inventor in this national stage application, both of these requests are **DISMISSED AS MOOT**.

The "Request..." filed on 18 September 2006 seeks to add "Chang, Hee Seok" as an inventor, alleging that his name "was mistakenly omitted when this PCT entered into the U.S. National Phase. A newly executed Declaration has filed on September 08, 2005." Although the declaration filed on 02 March 2005 did not provide Mr. Chang's name, this error was not sufficient to change his status as an inventor. Thus, Mr. Chang remained an inventor of this international application despite the submission of a defective declaration. Therefore, it is not now necessary to add him as an inventor. Therefore, the "Request..." filed on 18 September 2006 is **DISMISSED AS MOOT**.

## DECISION

Request To Change Primary Inventor" filed on 10 January 2006, the "Request To Add Primary Inventor's Name" filed on 18 September 2006, and the "Request To Withdraw The Petition" filed on 24 February 2007 are **DISMISSED AS MOOT**.

The $130.00 surcharge under 37 CFR 1.492(h) is being charged to counsel's Deposit Account No. 50-1992, as authorized by the Transmittal Letter filed on 02 March 2005.

The application is being returned to the National Stage Processing Branch for further processing. The date of this application under 35 U.S.C. 371(c)(1), (2) and (4) is **08 September 2005**.

George Dombroske
PCT Legal Examiner
Office of PCT Legal Administration
Tel: (571) 272-3283
Fax: (571) 273-0459

UNITED STATES PATENT AND TRADEMARK OFFICE

0 3 DEC 2008

Commissioner for Patents
United States Patent and Trademark Office
P.O. Box 1450
Alexandria, VA 22313-1450
www.uspto.gov

67801
Martin D. Moynihan
d/b/a PRTSI, INC.
P.O. Box 15446
Arlington, VA 22215

In re Application of
WANG *et al*
Application No.: 10/526,445
PCT No.: PCT/IL2003/000723
Filing Date: 02 September 2003
Priority Date: 04 September 2002
Attorney Docket No.: 29374
For: DENATURANT STABLE AND/OR PROTEASE RESISTANT, CHAPERONE-LIKE OLIGOMERIC PROTEINS, POLYNUCLEOTIDES ENCODING SAME, THEIR USES AND METHODS OF INCREASING A SPECIFIC ACTIVITY THEREOF

**DECISION**

This is a decision on the petitions under 37 CFR §§ 1.78(a)(3) and 1.78(a)(6), filed 28 February 2008, to accept an unintentionally delayed claim under 35 U.S.C. §§120, 365(c) and 119(e) for the benefit of the prior-filed applications set forth in the concurrently filed amendment.

The petition is hereby **DISMISSED** without prejudice.

A petition for acceptance of a claim for late priority under 37 CFR 1.78(a)(3) is only applicable to those applications filed on or after November 29, 2000. Further, the petition is appropriate only after the expiration of the period specified in 37 CFR 1.78(a)(2)(ii). The petition under 37 CFR 1.78(a)(3) must be accompanied by:

> (1) the reference required by 35 U.S.C. § 120 and 37 CFR 1.78(a)(2)(i) of the prior-filed application, unless previously submitted;
> (2) the surcharge set forth in § 1.17(t); and
> (3) a statement that the entire delay between the date the claim was due under 37 CFR 1.78(a)(2)(ii) and the date the claim was filed was unintentional. The Director may require additional information where there is a question whether the delay was unintentional.

The petition does not comply with item (1).

Applicants submitted an amendment that states, in part:

**11/526,445**

> This application is a National Phase Application of PCT/IL03/00723 having International Filing Date of September 2, 2003, which claims priority from U.S. Patent Application No. 10/233,409 filed on September 4, 2002, . . .

37 CFR 1.78(a)(2)(i) requires that any nonprovisional application claiming the benefit of one or more prior-filed copending nonprovisional or international application designating the U.S. applications must contain or be amended to contain a reference to each such prior-filed application, identifying it by application number and indicating the relationship of the applications. The relationship between the applications is whether the subject application is a continuation, divisional, or continuation-in-part of a prior-filed nonprovisional or international application. In this case, the amendment does not identify the relationship of U.S. Application No. 10/233,409 September 4, 2002 to the instant application.

Before the petition under 37 CFR § 1.78(a)(3) can be granted, a substitute amendment (complying with 37 CFR 1.121) stating the relationship of the prior-filed international application to the instant application is required.

Any further correspondence with respect to this matter may be filed electronically via the USPTO EFS-Web, by facsimile to the Office of PCT Legal Administration at (571) 273-04559, or if mailed addressed to Mail Stop PCT, Commissioner for Patents, Office of PCT Legal Administration, P.O. Box 1450, Alexandria, Virginia 22313-1450, with the contents of the letter marked to the attention of the Office of PCT Legal Administration.

Any questions concerning this matter may be directed to James Thomson at (571) 272-3302.

Boris Milef
Legal Examiner
Office of PCT Legal Administration

UNITED STATES PATENT AND TRADEMARK OFFICE

29 JUN 2009

Commissioner for Patents
United States Patent and Trademark Office
P.O. Box 1450
Alexandria, VA 22313-1450
www.uspto.gov

67801
Martin D. Moynihan
d/b/a PRTSI, INC.
P.O. Box 15446
Arlington, VA 22215

In re Application of
WANG *et al*
Application No.: 10/526,445
PCT No.: PCT/IL2003/000723
Filing Date: 02 September 2003
Priority Date: 04 September 2002
Attorney Docket No.: 29374
For: DENATURANT STABLE AND/OR PROTEASE RESISTANT, CHAPERONE-LIKE OLIGOMERIC PROTEINS, POLYNUCLEOTIDES ENCODING SAME, THEIR USES AND METHODS OF INCREASING A SPECIFIC ACTIVITY THEREOF

**DECISION**

This is a decision on the renewed petition under 37 CFR §§ 1.78(a)(3) and 1.78(a)(6), filed 12 December 2008[1], to accept an unintentionally delayed claim under 35 U.S.C. §§120, 365(c) and 119(e) for the benefit of the prior-filed applications set forth in the concurrently filed amendment.

The renewed petition is **GRANTED**.

The present nonprovisional application was filed after 29 November 2000, and the claim herein for the benefit of priority to the prior-filed applications is submitted after expiration of the period specified in 37 CFR 1.78(a)(2)(ii) and 1.78(a)(5)(ii). Therefore, this is a proper petition under 37 CFR 1.78(a)(3) and 1.78(a)(6).

**(1)** the reference required by 35 U.S.C. § 120, § 119(e) and 37 CFR 1.78(a)(2) and (a)(5) to the prior-filed applications, unless previously submitted;
**(2)** the surcharge set forth in § 1.17(t); and
**(3)** a statement that the entire delay between the date the claim was due under 37 CFR 1.78(a)(2)(ii) and 1.78(a)(5)(ii) and the date the claim was filed was unintentional.

[1] This decision will also act as a response to the Status Request filed April 29, 2009.

The renewed petition complies with the requirements for a grantable petition under 37 CFR §§ 1.78(a)(3) and 1.78(a)(6) in that: (1) the first sentence of the specification has been amended to include the reference required by 35 U.S.C. § 120, § 119(e) and 37 CFR 1.78(a)(2) and (a)(5) to the prior-filed applications; (2) the surcharge fee required by 37 CFR 1.17(t) was previously submitted; and (3) Applicants' statement in the petition filed 28 February 2008 is construed as meaning that "the entire delay between the date the claim was due under 37 CFR 1.78(a)(2)(ii) and 1.78(a)(5)(ii) and the date the claim was filed was unintentional." If this is incorrect, applicant **MUST IMMEDIATELY** notify the Office of PCT Legal Administration. As so construed, then item (3) is satisfied.

Accordingly, having found that the petition for acceptance of an unintentionally delayed claim for the benefit of priority under 35 U.S.C. §§ 120 and 119(e) to the prior-filed applications satisfies the conditions of 37 CFR §§ 1.78(a)(3) and 1.78(a)(6), the petition is granted.

***The granting of the petition to accept the delayed benefit claim to the prior-filed applications under 37 CFR §§ 1.78(a)(3) and 1.78(a)(6) should not be construed as meaning that this application is entitled to the benefit of the filing date of the prior-filed applications. In order for this application to be entitled to the benefit of the prior-filed applications, all other requirements under 35 U.S.C. §§120 and 365(c) and 1.78(a)(1) and (a)(2) and under 35 U.S.C. §119(e) and 37 CFR 1.78(a)(4) and (a)(5) must be met. Similarly, the fact that the corrected Filing Receipt accompanying this decision on petition includes the prior-filed applications should not be construed as meaning that applicant is entitled to the claim for benefit of priority to the prior-filed applications noted thereon. Accordingly, the examiner will, in due course, consider this benefit claim and determine whether this application is entitled to the benefit of the earlier filing date.***

A corrected Filing Receipt, which includes the priority claim to the prior-filed international application accompanies this decision on petition.

This matter is being referred to Technology Center Art Unit 1656 for further action as deemed appropriate in light of this decision.

**10/526,445**

Any questions concerning this decision may be directed to James Thomson at (571) 272-3302.

Boris Milef
Legal Examiner
Office of PCT Legal Administration

UNITED STATES PATENT AND TRADEMARK OFFICE

Commissioner for Patents
United States Patent and Trademark Office
P.O. Box 1450
Alexandria, VA 22313-1450
www.uspto.gov

MAIL

OCT 27 2008

DIRECTOR'S OFFICE
TECHNOLOGY CENTER 2600

RADER FISHMAN & GRAUER PLLC
LION BUILDING
1233 20TH STREET N.W., SUITE 501
WASHINGTON DC 20036

| | | |
|---|---|---|
| In re Application of: | : | |
| AOKI, TAKASHI et al | : | |
| Application Serial No.: 10/526,490 | : | DECISION |
| Filed: March 04, 2005 | : | ON PETITION |
| For: **IMAGE PROCESSING APPARATUS AND** | : | |
| **IMAGE PROCESSING METHOD** | : | |

This is a decision on the petition, filed on August 6, 2008 under 37 C.F.R. §1.181 to withdraw holding of Non-Compliance Notice mailed on July 25, 2008.

Petitioner states in part "Please note that the requirements of 37 C.F.R. § 1.121 set forth the manner of making *amendments* in an application. ... The status identifier (withdrawn - currently amended) is also acceptable for a withdrawn claim that is being currently amended. ... The Notice of Non-Compliance cites the basis for non-compliance as being that:

Claim 7 and 13 are non-compliant claims because they recites two labels (WITHDRAWN and CURRENTLY AMENDED) at the same time while one label is required.

Applicant notes that this basis is cited despite the fact that the face of the Notice of Non-Compliance clearly indicates that status identifiers may be any *"one of the following status identifiers: (Original), (Currently amended), (Canceled), (Previously presented), (New), (Not entered), (Withdrawn) and (Withdrawn-currently amended)."* "

## BACKGROUND

An Amendment after final rejection was filed on June 11, 2008. As part of the amendment after final, applicant used the status identifier (Withdrawn – Currently Amended) for claims 7 and 13.

On July 25, 2008, a Notice of Non-Compliant Amendment (37 CFR 1.121) and Advisory Action were simultaneously mailed to the applicant. The Notice of Non-Compliant Amendment stated "Claim 7 and 13 are non-compliant claims because they recite two labels (WITHDRAWN and CURRENTLY AMENDED) at the same time while one label is required."

37 CFR § 1.121(c)(2) states in part:

> If a withdrawn claim is currently amended, its status in the claim listing may be identified as "withdrawn — currently amended."

MPEP § 714(II)(C)(A) states:

> (A) Status Identifiers: The current status of all of the claims in the application, including any previously canceled or withdrawn claims, must be given. Status is indicated in a parenthetical expression following the claim number by one of the following status identifiers: (original), (currently amended), (previously presented), (canceled), (withdrawn), (new), or (not entered). The status identifier (withdrawn – currently amended) is also acceptable for a withdrawn claim that is being currently amended. See paragraph (E) below for acceptable alternative status identifiers.

Applicant's use of the Status identifier (Withdrawn – Currently Amended) is clearly within the boundaries set forth by the Patent Rules and MPEP.

The request for withdrawal of the Non-Compliant Amendment (37 C.F.R. 1.121) notice mailed on July 25, 2008 is **Granted**.

Amendment after final rejection has already been considered by the examiner as evidenced by the Advisory Action mailed July 25, 2008. Therefore, the application is being forwarded to the Technology Center for processing and consideration of the Pre-Appeal Brief Request for review and petition to withdraw restriction requirement simultaneously filed September 23, 2008.

Michael Horabik
Quality Assurance Specialist
Technology Center 2600
Communications

UNITED STATES PATENT AND TRADEMARK OFFICE

Commissioner for Patents
United States Patent and Trademark Office
P.O. Box 1450
Alexandria, VA 22313-1450
www.uspto.gov

RADER FISHMAN & GRAUER PLLC
LION BUILDING
1233 20TH STREET N.W., SUITE 501
WASHINGTON DC 20036

**COPY MAILED**

FEB 0 9 2009

**OFFICE OF PETITIONS**

| | | |
|---|---|---|
| In re Application of | : | DECISION ON |
| Aoki et al. | : | PETITION |
| Application No.: 10/526490 | : | |
| Filing or 371(c) Date: 03/04/2005 | : | |
| Attorney Docket Number: SON-2842 | : | |

This is a decision in response to the Request to Withdraw Erroneous Notice of Abandonment, filed December 17, 2008. The petition is properly treated under 37 CFR 1.181.

The Petition is hereby **granted**.

Background

A Notice of Abandonment was mailed on December 11, 2008, indicating that the application became abandoned for failure to timely and properly reply to the final Office action, mailed April 28, 2008. The Office action set a three (3) month period for reply, and provided for extensions of time under 37 CFR 1.136(a).

The present petition

Applicant files the present petition and asserts that a timely response to the Office was filed, including a Pre-Appeal Brief Request for Review and Notice of Appeal, and a request and fee for a two (2) month extension of time, on September 23, 2008. Applicant asserts that the Notice of Abandonment was mailed in error and requests withdrawal of the Notice.

A review of the application file

The application file reveals that a final Office action was mailed April 28, 2008. Applicant filed an after-final Amendment in response to the Office action on June 11, 2008. In response to the Amendment, this Office mailed a Notice on Noncompliant Amendment on July 25, 2008. Applicant filed a petition to withdraw the Notice on Noncompliant Amendment on August 6, 2008, which was granted in a Decision mailed October 27, 2008. The Decision granting the petition forwarded the application to the Technology Center for processing and consideration of the Pre-Appeal Brief Request for Review and petition to withdraw restriction requirement filed with the Pre-Appeal Brief Request for Review and Notice of Appeal filed September 23, 2008.

Analysis and conclusion

Applicant timely filed a Pre-Appeal Brief Request for Review and Notice of Appeal, and a request and fee for a two (2) month extension of time, on September 23, 2008. Accordingly, the holding of abandonment for failure to timely and properly reply to the final Office action is hereby withdrawn.

The application is being referred to Technology Center Art Unit 2624 for processing and consideration of the Pre-Appeal Brief Request for Review and petition to withdraw restriction requirement filed with the Pre-Appeal Brief Request for Review and Notice of Appeal filed September 23, 2008.

Telephone inquiries concerning this matter should be directed to the undersigned at (571) 272-3232.

/Derek L. Woods/
Derek L. Woods
Attorney
Office of Petitions

UNITED STATES PATENT AND TRADEMARK OFFICE

Commissioner for Patents
United States Patent and Trademark Office
P.O. Box 1450
Alexandria, VA 22313-1450
www.uspto.gov

MAIL

FEB 19 2009
DIRECTOR'S OFFICE
TECHNOLOGY CENTER 2600

RADER FISHMAN & GRAUER PLLC
LION BUILDING
1233 20TH STREET N.W., SUITE 501
WASHINGTON DC 20036

| | | |
|---|---|---|
| In re Application of: | : | |
| AOKI, TAKASHI et al | : | DECISION ON PETITION TO |
| Application Serial No.: 10/526,490 | : | WITHDRAW RESTRICTION |
| Filed: March 04, 2005 | : | REQUIREMENT UNDER |
| For: **IMAGE PROCESSING APPARATUS AND IMAGE PROCESSING METHOD** | : | 37 CFR 1.144 |

This is a decision on the petition filed September 23 2008, under 37 CFR § 1.144 requesting withdrawal of the restriction requirement issued by the examiner on April 28, 2008; traversed by applicants in a response filed June 11, 2008; and maintained by the examiner in an Advisory action dated July 25, 2008.

BACKGROUND:

The application was filed on March 04, 2005 with claims 1-6 directed to an image processing apparatus for trimming out a part of image data stored in a memory and transferring the trimming image data (claims 1-4) and an image processing method for trimming out a part of image data stored in a memory and transferring the trimming image data (claims 5-6).

On October 03, 2007, a rejection of claims 1-6 in the application was mailed.

On January 10, 2008, an amendment was filed adding claims 7-14 directed to "an image processing apparatus for trimming an image portion from an original image stored in a memory and transferring the trimmed image portion" (claims 7-12) and an image processing method for trimming an image portion from an original image stored in a memory and transferring the trimmed image portion (claims 13-14).

On April 28, 2008, A Final Office action was mailed including (1) election of claim 1-6 by original presentation, (2) withdrawal of claims 7-14 from consideration as non-elected due to a different embodiment of the invention where they teaches a memory module and processor that issues a controller command to retrieve the trim image and the controller is configures to

command the corresponding data reader to read only the trimmed image in these claims and (3) maintaining the rejection of claims 1-6.

On June 11, 2008, Applicant filed an amendment after final that traversed the examiner's holding that claims 7-14 are directed to a different invention than claims 1-6. Also included was an amendment to the claims.

On July 25, 2008, an Advisory action was mailed that denied entry of the amendment and maintained the restriction requirement.

On September 23, 2008, applicant filed the instant petition arguing the examiner has failed to show the inventions to be independent or distinct and the examiner has failed to show why the invention recited in claims 7-14 would impose an undue burden.

## REGULATIONS AND PRACTICE

37 C.F.R. § 1.143 states:

> If the applicant disagrees with the requirement for restriction, he may request reconsideration and withdrawal or modification of the requirement, giving the reasons therefor. (See § 1.111). In requesting reconsideration the applicant must indicate a provisional election of one invention for prosecution, which invention shall be the one elected in the event the requirement becomes final. The requirement for restriction will be reconsidered on such a request. If the requirement is repeated and made final, the examiner will at the same time act on the claims to the invention elected.

37 C.F.R. § 1.144 states:

> After a final requirement for restriction, the applicant, in addition to making any reply due on the remainder of the action, may petition the Commissioner to review the requirement ... A petition will not be considered if reconsideration of the requirement was not requested (see § 1.181).

37 C.F.R. § 1.145 states:

> If, after an office action on an application, the applicant presents claims directed to an invention distinct from and independent of the invention previously claimed, the applicant will be required to restrict the claims to the invention previously claimed if the amendment is entered, subject to reconsideration and review as provided in § § 1.143 and 1.144.

37 C.F.R. § 1.181 states:

> (a) Petition may be taken to the Commissioner:
> (1) From any action or requirement of any examiner in the ex parte prosecution

of an application, or in ex parte or inter partes prosecution of a reexamination proceeding which is not subject to appeal to the Board of Patent Appeals and Interferences or to the court;

(2) In cases in which a statute or the rules specify that the matter is to be determined directly by or reviewed by the Commissioner; and

(3) To invoke the supervisory authority of the Commissioner in appropriate circumstances. For petitions in interferences, see § 1.644.

(b) Any such petition must contain a statement of the facts involved and the point or points to be reviewed and the action requested. Briefs or memoranda, if any, in support thereof should accompany or be embodied in the petition; and where facts are to be proven, the proof in the form of affidavits or declarations (and exhibits, if any) must accompany the petition.

(c) When a petition is taken from an action or requirement of an examiner in the ex parte prosecution of an application, or in the ex parte or inter partes prosecution of a reexamination proceeding, it may be required that there have been a proper request for reconsideration (§ 1.111) and a repeated action by the examiner. The examiner may be directed by the Commissioner to furnish a written statement, within a specified time, setting forth the reasons for his or her decision upon the matters averred in the petition, supplying a copy to the petitioner.

MPEP § 803 states:

Under the statute an application may properly be required to be restricted to one of two or more claimed inventions only if they are able to support separate patents and they are either independent (MPEP § 806.04 - § 806.04(i)) or distinct (MPEP § 806.05 - § 806.05(i)).

If the search and examination of an entire application can be made without serious burden, the examiner must examine it on the merits, even though it includes claims to independent or distinct inventions.

CRITERIA FOR RESTRICTION BETWEEN PATENTABLY DISTINCT INVENTIONS

There are two criteria for a proper requirement for restriction between patentably distinct inventions:

(A) The inventions must be independent (see MPEP § 802.01, § 806.04, § 808.01) or distinct as claimed (see MPEP § 806.05 - § 806.05(i)); and

(B) There would be a serious burden on the examiner if restriction is not required (see MPEP § 803.02, § 808 and § 808.02

MPEP § 821.01 states:

Where the initial requirement is traversed, it should be reconsidered. If, upon reconsideration, the examiner is still of the opinion that restriction is proper, it should be repeated and made final in the next Office action. (See MPEP § 803.01.) In doing so, the examiner should reply to the reasons or arguments advanced by applicant in the traverse. Form paragraph 8.25 should be used to make a restriction requirement final.

OPINION

37 C.F.R. § 1.181(c) requires that an action by an examiner, to be properly petitionable, must be followed by a request for reconsideration, and a repeated action by the examiner. 37 C.F.R. § 1.144 states that the applicant may petition the Commissioner after a final requirement for the restriction has been made.

In the above-identified application, applicant filed a request for reconsideration prior to the petition of Septemeber 23, 2008, in accordance with 37 C.F.R. § 1.143. Although the restriction was never made final in accordance with MPEP § 821.01, the initial restriction requirement was maintained in the advisory action. To expedite prosecution of this application, the Office action of July 25, 2008, which maintained the restriction requirement, is being treated as a Final restriction requirement.

The issue presented in the petition is whether the restriction based on original presentation under 37 C.F.R. § 1.145 is proper under the current regulations and practice.

MPEP § 803 sets forth two criteria for a proper restriction requirement between patentably distinct inventions: (A) The inventions must be independent (see MPEP § 802.01, § 806.04, § 808.01) or distinct as claimed (see MPEP § 806.05 - § 806.05(i)); and (B) There would be a serious burden on the examiner if restriction is not required (see MPEP § 803.02, § 808 and § 808.02

The issue at hand is whether or not claims 1-6 are directed to a different invention than new claims 7-14. Upon further review, the office action of 4/28/08 states:

> ...claims 7-14 discloses different embodiment of the invention where they teaches a memory module and a processor that issues a controller command to retrieve the trim image and the controller is configures to command the corresponding data reader to read only the trimmed image. Since applicant has received an action on the merits for the originally presented invention, this invention has been constructively elected by original presentation for prosecution on the merits.

A review of the record finds that the office action of 4/28/08 failed to set forth whether the inventions are independent in accordance with MPEP § 802.01, § 806.04, § 808.01 or distinct in accordance with MPEP § 806.05 - § 806.05(i). Also, the office action failed to set forth a serious burden on the examiner in accordance with MPEP § 803.02, § 808 and § 808.02.

CONCLUSION

For the above stated reasons, the petition to withdraw the restriction requirement is **GRANTED**.

The Final rejection mailed April 28, 2008 is hereby VACATED. The amendment filed 6/11/08 is entered. The Pre-appeal brief conference request filed 9/23/08 is dismissed. The Application is being returned to the examiner to set forth a restriction of claims 1-14 as filed on 6/11/08 in the format defined by MPEP 800 or an office action on the merits of claims 1-14 as filed on 6/11/08.

Mark R. Powell
Director
Technology Center 2600
Communications
(571) 272-4550

UNITED STATES PATENT AND TRADEMARK OFFICE

Commissioner for Patents
United States Patent and Trademark Office
P.O. Box 1450
Alexandria, VA 22313-1450
www.uspto.gov

FINNEGAN, HENDERSON, FARABOW, GARRETT & DUNNER
LLP
901 NEW YORK AVENUE, NW
WASHINGTON DC 20001-4413

COPY MAILED

AUG 0 3 2007

OFFICE OF PETITIONS

Applicant: Bene et al.
Appl. No.: 10/526,498
Filing Date: September 29, 2005
Title: CONTROL APPARATUS AND CONTROL METHOD FOR A BLOOD TREATMENT EQUIPMENT
Attorney Docket No.: 07552.0055-00000
Pub. No.: US 2006/0157413 A1
Pub. Date: July 20, 2006

This is a decision on the request for a corrected patent application publication under 37 CFR 1.221(b), received on September 8, 2006, for the above-identified application

The request is DISMISSED.

Applicant requests that the application be republished because the patent application publication contains a material error because the following was missing:

"Gambro Lundia AB" does not appear as assignee on the cover page.

Amendments to claim 3, as provided in the Preliminary Amendment filed on March 4, 2005.

The Cross Reference to Related Applications, as provided in the Preliminary Amendment filed on March 4, 2005.

37 CFR 1.221 (b) is applicable "only when the Office makes a material mistake which is apparent from Office records.... Any request for a corrected publication or revised patent application publication other than provided as provided in paragraph (a) of this section must be filed within two months from the date of the patent application publication. This period is not extendable." A material mistake must affect the public's ability to appreciate the technical disclosure of the patent application publication, to determine the scope of the patent application publication, or to determine the scope of the provisional rights that an applicant may seek to enforce upon issuance of a patent. [1]

The instant request does not identify a material mistake in the publication made by the Office under 37 CFR 1.221(b) with respect to the assignment information. The application was

[1] Changes to Implement Eighteen-Month Publication of Patent Applications, 65 FR 57023, 57038 (Sept. 20, 2000), 1239, Off. Gaz. Pat. Office Notices 63, 75 (Oct. 10, 2000) (final rule).

correctly published without the assignment information as assignment information was not provided with an application data sheet or transmittal letter on filing.[2] Applicants should not file requests for corrected publication that include errors in assignment information or missing assignment information. See MPEP § 1130.

The instant request does not identify a material mistake in the publication made by the Office under 37 CFR 1.221(b) with respect the amendments to claim 3, as the amendments to claim 3 are incorporated into claim 3.

The patent application publication does not include a mistake with respect to the preliminary amendment to the benefit/priority claim. The patent application publication does not include a mistake regarding the failure to include the preliminary amendment in the publication by the Office because patent application publications are not required to include preliminary amendments, according to 37 CFR 1.215(a)[3], which says the following, in part:

> (a) ... The patent application publication will be based upon the specification and drawings deposited on the filing date of the application, as well as the executed oath or declaration submitted to complete the application. **The patent application publication may also be based upon amendments to the specification (other than the abstract or the claims) that are reflected in a substitute specification under Sec. 1.125(b),** amendments to the abstract under Sec. 1.121(b), amendments to the claims that are reflected in a complete claim listing under Sec. 1.121(c), and amendments to the drawings under Sec. 1.121(d), provided that such substitute specification or amendment is submitted in sufficient time to be entered into the Office file wrapper of the application before technical preparations for publication of the application have begun. (emphasis added)

§ 1.215(c) says the following:

(c) At applicant's option, the patent application publication will be based upon the copy of the application (specification, drawings, and oath or declaration) as amended, provided that applicant supplies such a copy in compliance with the Office electronic filing system requirements within one month of the mailing date of the first Office communication that includes a confirmation number for the application, or fourteen months of the earliest filing date for which a benefit is sought under title 35, United States Code, whichever is later.

While the patent application publication may now include a preliminary amendment, the Office is not required to use the preliminary amendment. The Office changed the procedures for publication of patent applications so as to publish applications as amended, when possible. Until 2004, patent application publications were published as originally filed. See Patent Application Publications May Now Include Amendments, 1281 Off. Gaz. Pat. Office Notices 53 (April 13, 2004) and MPEP 1121. Applicant did not file a substitute specification, which incorporated the

---

[2] See 37 CFR 1.215 and Comment 59, Changes to Implement Eighteen-Month Publication of Patent Applications, 65 FR 57023, 57047 (Sept. 20, 2000), 1239 Off. Gaz. Pat. Office Notices 63, 84 (Oct. 10, 2000) (final rule).

[3] Changes to Support Implementation of the United States Patent and Trademark Office 21st Century Strategic Plan; Final Rule, 69 FR 56482 (Sept. 21, 2004).

preliminary amendment. See Pre-Grant Publication Helpful Hint: File Continuation or Divisional Application with a New Specification and Copy of Oath or Declaration from Prior Application, 1251 Off. Gaz. Pat. Office Notices 54 (Oct. 9, 2001). The Office correctly published the application in accordance with 37 CFR 1.215(a).

Applicant is reminded of his duty to conduct a reasonable inquiry before filing a paper before the Office. See MPEP 410.

Applicants' request for a corrected patent application publication on September 8, 2006, may constitute a "failure to engage in reasonable efforts to conclude processing or examination of the application." See 1.704(c). This determination will be made on or after a mailing of a Notice of Allowance.

The applicant is advised that a "request for republication of an application previously published" may be filed under 37 CFR 1.221 (a). Such a request for republication "must include a copy of the application compliance with the Office's electronic filing system requirements and be accompanied by the publication fee set forth in § 1.18 (d) and the processing fee set forth in § 1.17 (i)." If the request for republication does not comply with the electronic filing system requirements, the republication will not take place and the publication fee set forth in § 1.18 (d) will be refunded. The processing fee will be retained.

Any request for republication under 37 CFR 1.221(a), must be submitted via the EFS system and questions or request for reconsideration of the decision, should be addressed as follows:

By mail to: Mail Stop PGPUB
Commissioner for Patents
P.O. Box 1450
Alexandria, Va. 22313-1450

By facsimile: 571-273-8300

Inquiries relating to this matter may be directed to Mark Polutta at (571) 272-7709 (voice).

Mark Polutta
Senior Legal Advisor
Office of Patent Legal Administration
Office of the Deputy Commissioner
for Patent Examination Policy

UNITED STATES PATENT AND TRADEMARK OFFICE

UNITED STATES DEPARTMENT OF COMMERCE
United States Patent and Trademark Office
Address: COMMISSIONER FOR PATENTS
P.O. Box 1450
Alexandria, Virginia 22313-1450
www.uspto.gov

Mail Date: 04/21/2010

Millen White
Zelano & Branigan
Arlington Courthouse Plaza I
2200 Clarendon Boulevard Suite 1400
Arlington, VA 22201

| | | |
|---|---|---|
| **Applicant** | : Pierre Dufresne | : DECISION ON REQUEST FOR |
| **Patent Number** | : 7582587 | : RECALCULATION of PATENT |
| **Issue Date** | : 09/01/2009 | : TERM ADJUSTMENT IN VIEW |
| **Appliction No** | : 10/526,499 | : OF WYETH AND NOTICE OF INTENT TO |
| **Filed** | : 10/05/2005 | : ISSUE CERTIFICATE OF CORRECTION |
| | | : |

The Request for Recalculation is **GRANTED** to the extent indicated.

The patent term adjustment has been determined to be **847** days. The USPTO will *sua sponte* issue a certificate of correction reflecting the amount of PTA days determined by the recalculation.

Prior to the issuance of the certificate of correction, the USPTO will afford patentee an opportunity to be heard and request reconsideration. Accordingly, patentee has **one month or thirty (30) days**, whichever is longer, to file a request for reconsideration of this patent term adjustment calculation. See 35 U.S.C. 154(b)(3)(B)(ii) and 37 CFR 1.322(a)(4). No extensions of time will be granted under 37 CFR 1.136.

Patentee should use document code PET.OP if electronically filing a request for reconsideration of this patent term adjustment calculation. The patentee must also include the information required by 37 CFR 1.705(b)(2) and the fee required by 37 CFR 1.18(e). If patentee does not file a timely request for reconsideration of this patent term adjustment calculation including the information required by 37 CFR 1.705(b)(2) and the fee required by 37 CFR 1.18(e), the USPTO will issue a certificate of correction reflecting the PTA determination noted above.

Patentee should be aware that in order to preserve the right to review in the United States District Court for the District of Columbia of the USPTO patent term adjustment determination, patentee must ensure that he or she also take the steps required under 35 U.S.C. 154(b)(4)(A) in a timely manner. Nothing in the request for recalculation should be construed as providing an alternative time frame for commencing a civil action under 35 U.S.C. 154(b)(4)(A).

Any questions concerning this decision should be directed to the Office of Patent Legal Administration at 571-272-7702.

## SPE RESPONSE FOR CERTIFICATE OF CORRECTION

Paper No.: _____

DATE : 7/24/08

TO SPE OF : ART UNIT 3681

SUBJECT : Request for Certificate of Correction on Patent No.: 7351178

A response is requested with respect to the accompanying request for a certificate of correction.

Please complete this form and return with file, within 7 days to:
Palm location 7580, **Certificates of Correction Branch – South Tower – 9A22**
If response is for an IFW, **return to employee (named below) via PUBSCofC Team in MADRAS.**
With respect to the change(s) requested, correcting Office and/or Applicant's errors, should the patent read as shown in the certificate of correction (COCIN)? No new matter should be introduced, nor should the scope or meaning of the claims be changed.

Valerie Jackson

**Thank You For Your Assistance**

**Certificates of Correction Branch**
*Tel. No. 703-308-9390 ext. 114*
Fax 571 270 9928

**The request for issuing the above-identified correction(s) is hereby:**
Note your decision on the appropriate box.

- [x] Approved — All changes apply.
- [ ] Approved in Part — Specify below which changes do not apply.
- [ ] Denied — State the reasons for denial below.

Comments:

C Marsma
SPE

3681
Art Unit

UNITED STATES PATENT AND TRADEMARK OFFICE

Commissioner for Patents
United States Patent and Trademark Office
P.O. Box 1450
Alexandria, VA 22313-1450
www.uspto.gov

25 JUL 2006

VARNUM RIDDERING SCHMIDT AND HOWLETT
Bridgewater Place
P.O. Box 352
Grand Rapids, MI 49501-0352

| | | |
|---|---|---|
| In re Application of | : | |
| KENNEDY *et al* | : | |
| U.S. Application No.: 10/526,505 | : | |
| PCT No.: PCT/US03/27747 | : | |
| Int. Filing Date: 04 September 2003 | : | **DECISION** |
| Priority Date: 04 September 2002 | : | |
| Attorney Docket No.: HMI P1191US2 | : | |
| For: SPACE DIVISION SYSTEM WITH | : | |
| TECHNOLOGY | : | |

This decision is in response to applicants' petition Under 37 CFR 1.47(a) filed 07 June 2006.

## BACKGROUND

On 07 November 2005, the DO/EO/US mailed a Notification of Missing Requirements Under 35 U.S.C. 371 (Form PCT/DO/EO/905) indicating that an oath or declaration in compliance with 37 CFR 1.497(a) and (b) and a surcharge fee was required. Applicants were given two months to respond with extensions of time available.

On 07 June 2006, applicants filed a response which was accompanied by, *inter alia*, the subject petition, a declaration signed by six of eight named inventors; an affidavit of Thomas Lockhart; an affidavit of Jodi Russo; a five-month extension and fee; the petition fee of $200.00; and the $130.00 surcharge fee.

## DISCUSSION

Applicants claim that Joseph Chi-Chen Ho and Bill Chen-Hsun Yen cannot be located after a diligent effort and have filed the subject petition in response to the Form PCT/DO/EO/905 mailed 07 November 2005.

A petition under 37 CFR 1.47(a) requires: (1) the petition fee; (2) factual proof that the missing joint inventors cannot be located or refuse to cooperate; (3) a statement of the last known addresses of the nonsigning joint inventors; (4) and an oath or declaration executed by the signing joint inventors on their behalf and on behalf of the nonsigning joint inventors.

Concerning item (1), the petition fee of $200.00 has been paid.

Regarding item (2), applicants' burden in showing that an inventor cannot be located is explained in section 409.03(d) of the MPEP which states, in part:

> Where inability to find or reach a nonsigning inventor 'after diligent effort' is the reason for filing under 37 CFR 1.47, an affidavit or declaration of the facts should be submitted that fully describes the exact facts which are relied on to establish that a diligent effort was made . . .
>
> The statement of facts must be signed, where at all possible, by a person having firsthand knowledge of the facts recited therein. Statements based on hearsay will not normally be accepted. Copies of documentary evidence such as internet searches, certified mail return receipts, cover letters of instructions, telegrams, that support a finding that the nonsigning inventor could not be found or reached should be made part of the statement. The steps taken to locate the whereabouts of the nonsigning inventor should be included in the statement of facts. It is important that the statement contain facts as opposed to conclusions . . .

In this case, petitioners have submitted declarations by Thomas L. Lockhart and Jodi Russo explaining the attempts to locate the nonsigning inventors. These attempts include various telephone and internet searches performed and contacting the nonsigning inventor's former employers for any additional information. Petitioners also provided the requisite documentary evidence in the form of internet searches etc. to substantiate their claim. This evidence is sufficient to show that a diligent effort was made to locate the nonsigning inventors and meet the requirements of the MPEP. Item (2) of 37 CFR 1.47(a) is satisfied.

With regards to item (3), the last known address of co-inventor Joseph Chi-Chen Ho is listed as:

143 Albany Street, #223
Cambridge, MA 02139

The last known address of co-inventor Bill Chen-Hsun Yen is listed as:

5892 169th Ave.
Bellevue, WA 98006

Concerning item (4), the 37 CFR 1.47(a) applicant submitted a declaration signed by six of the eight co-inventors on behalf of themselves and the nonsigning joint

inventor. This declaration meets the requirements of section 409.03(a) and is in compliance with 37 CFR 1.497(a) and (b).

All requirements of 37 CFR 1.47(a) are complete.

## CONCLUSION

Applicants' petition under 37 CFR 1.47(a) is **GRANTED**.

Applicants have completed the requirements for acceptance under 35 U.S.C. 371(c). The application has an international filing date of 04 September 2003 under 35 U.S.C. 363, and a 35 U.S.C. 371 date of 07 June 2006.

As provided in 37 CFR 1.47(a), a notice of the filing of this application will be forwarded to the non-signing inventor at his last known address of record and will be published in the Official Gazette.

This application is being forwarded to the National Stage Processing Division of the Office of PCT Operations for continued processing.

James Thomson

James Thomson
Attorney Advisor
Office of PCT Legal Administration

Tel.: (571) 272-3302

#5

UNITED STATES PATENT AND TRADEMARK OFFICE

10 JUL 2006

Commissioner for Patents
United States Patent and Trademark Office
P.O. Box 1450
Alexandria, VA 22313-1450
www.uspto.gov

Courtney N. DeMann
Varnum Riddering Schmidt & Howlett
Bridgewater Place
P.O. Box 352
Grand Rapids MI 49501-0352

| | | |
|---|---|---|
| In re Application of: | : | |
| KENNEDY, Sheila, et al. | : | DECISION ON PETITION |
| U.S. Application No.: 10/526,514 | : | (37 CFR 1.47(a)) |
| PCT No.: PCT/US2003/027535 | : | |
| Int'l Filing Date: 04 September 2003 | : | |
| Priority Date: 04 September 2002 | : | |
| Attorney's Docket No.: HMI P1192US2 | : | |
| For: CEILING SYSTEM WITH | : | |
| TECHNOLOGY | : | |

This decision is issued in response to applicants' petition under 37 CFR 1.47(a), filed 22 May 2006. Applicants have submitted the applicable petition fee of $200.

## BACKGROUND

On 04 September 2003, applicants filed international application PCT/US2003/027535. The international application claimed a priority date of 04 September 2002, and it designated the United States. The deadline for submission of the basic national fee was thirty months from the priority date, i.e., 04 March 2005.

On 04 March 2005, applicants filed a Transmittal Letter for entry into the U.S. national stage accompanied by, among other materials, payment of the basic national fee.

On 20 October 2005, the United States Designated/Elected Office (DO/EO/US) mailed a Notification Of Missing Requirements (Form PCT/DO/EO/905) indicating that an oath or declaration acceptable under 37 CFR 1.497 and the surcharge for filing the oath or declaration later than thirty months after the priority date were required.

On 22 May 2006, applicants filed a response to the Notification Of Missing Requirements (with the required five-month extension fee). The response included payment of the required surcharge, a declaration executed by five of the seven named inventors, and the petition under 37 CFR 1.47(a) considered herein. The petition seeks acceptance of the application without the signature of the remaining inventors, Joseph Chi-Chen HO and Bill Chen-Hsun YEN, whom applicants assert cannot be reached or located after diligent effort.

## DISCUSSION

A grantable petition under 37 CFR 1.47(a) must be accompanied by: (1) the fee under 37 CFR 1.17; (2) a statement of the last known address of the nonsigning inventor; (3) an oath or declaration by the other inventors on behalf of the other inventors on behalf of themselves and the nonsigning inventor; and (4) factual proof that the inventor refuses to execute the application or cannot be reached after diligent effort.

Applicants here have submitted the required petition fee, and the petition sets forth the last known addresses of the non-signing inventors. Accordingly, items (1) and (2) are satisfied.

Regarding item (3), section 409.03(a) of the Manual of Patent Examining Practice (MPEP) states that:

> An oath or declaration signed by all the available joint inventors with the signature block of the nonsigning inventor(s) left blank may be treated as having been signed by all the joint inventors on behalf of the nonsigning inventor(s), unless otherwise indicated.

Here, applicants have filed a declaration executed by five of the seven inventors and including unsigned signature boxes identifying the two nonsigning inventors. This declaration is treated as having been executed by the available inventors on their own behalf and on behalf of the nonsigning inventor. Item (3) is therefore satisfied.

Regarding item (4), the petition asserts that the nonsigning inventors cannot be reached or located after diligent effort. In support of this assertion, applicants have submitted statements from Thomas L. Lockhart and Jodi Russo, with supporting documents, describing efforts made to locate the nonsigning inventors, including numerous online searches. These materials provide an acceptable showing that the nonsigning inventors cannot be reached or located after diligent effort. Item (4) is therefore satisfied.

## CONCLUSION

Applicants' petition under 37 CFR 1.47(a) is **GRANTED**.

The application is accepted without the signature of inventors Joseph Chi-Chen HO and Bill Chen-Hsun YEN.

A notice of the acceptance of the application will be published in the Official Gazette, and a letter informing the inventors of the application will be forwarded to the nonsigining inventors at their last-known addresses, as set forth in the petition.

The application is being forwarded to the National Stage Processing Branch of the Office of PCT Operations for further processing. The date under 35 U.S.C. 371(c)(1), (c)(2), and (c)(4) is 22 May 2006.

Richard M. Ross
Attorney Advisor
Office of PCT Legal Administration
Telephone: (571) 272-3296
Facsimile: (571) 273-0459

UNITED STATES PATENT AND TRADEMARK OFFICE

Commissioner for Patents
United States Patent and Trademark Office
P.O. Box 1450
Alexandria, VA 22313-1450
www.uspto.gov

10 JUL 2006

Joseph Chi-Chen HO
143 Albany Street, #223
Cambridge, MA 02139

In re Application of: KENNEDY, Sheila, et al.
U.S. Application No.: 10/526,514
PCT No.: PCT/US2003/027535
Int'l Filing Date: 04 September 2003
Priority Date: 04 September 2002
Attorney's Docket No.: HMI P1192US2
For: CEILING SYSTEM WITH TECHNOLOGY

Dear Mr. HO:

You are identified as an inventor in the above identified United States patent application, filed under the provisions of 37 CFR 1.47(a) and 35 U.S.C. 116. Should a patent be granted, you will be designated as an inventor.

As a named inventor, you are entitled to inspect any paper in the file wrapper of the application, order copies of all or any part thereof (at a prepaid cost per 37 CFR 1.19) or to make your position of record in the application. Alternatively, you may arrange to do any of the preceding through a registered patent agent or attorney presenting written authorization from you. If you care to join the application, counsel of record (see below) would presumably assist you. Joining in the application would entail the filing of an appropriate oath or declaration by you pursuant to 37 CFR 1.63.

Richard M. Ross
Attorney Advisor
Office Of PCT Legal Administration
Telephone: (571) 272-3296
Facsimile: (571) 273-0459

Counsel Of Record:
Courtney N. DeMann
Varnum Riddering Schmidt & Howlett
Bridgewater Place
P.O. Box 352
Grand Rapids MI 49501-0352

UNITED STATES PATENT AND TRADEMARK OFFICE

10 JUL 2006

Commissioner for Patents
United States Patent and Trademark Office
P.O. Box 1450
Alexandria, VA 22313-1450
www.uspto.gov

Bill Chen-Hsun YEN
5892 169th Ave.
Bellevue, Washington 98006

In re Application of: KENNEDY, Sheila, et al.
U.S. Application No.: 10/526,514
PCT No.: PCT/US2003/027535
Int'l Filing Date: 04 September 2003
Priority Date: 04 September 2002
Attorney's Docket No.: HMI P1192US2
For: CEILING SYSTEM WITH TECHNOLOGY

Dear Mr. YEN:

You are identified as an inventor in the above identified United States patent application, filed under the provisions of 37 CFR 1.47(a) and 35 U.S.C. 116. Should a patent be granted, you will be designated as an inventor.

As a named inventor, you are entitled to inspect any paper in the file wrapper of the application, order copies of all or any part thereof (at a prepaid cost per 37 CFR 1.19) or to make your position of record in the application. Alternatively, you may arrange to do any of the preceding through a registered patent agent or attorney presenting written authorization from you. If you care to join the application, counsel of record (see below) would presumably assist you. Joining in the application would entail the filing of an appropriate oath or declaration by you pursuant to 37 CFR 1.63.

Richard M. Ross
Attorney Advisor
Office Of PCT Legal Administration
Telephone: (571) 272-3296
Facsimile: (571) 273-0459

Counsel Of Record:
Courtney N. DeMann
Varnum Riddering Schmidt & Howlett
Bridgewater Place
P.O. Box 352
Grand Rapids MI 49501-0352

UNITED STATES PATENT AND TRADEMARK OFFICE

Commissioner for Patents
United States Patent and Trademark Office
P.O. Box 1450
Alexandria, VA 22313-1450
www.uspto.gov

02 OCT 2006

VARNUM RIDDERING SCHMIDT AND HOWLETT
Bridgewater Place
P.O. Box 352
Grand Rapids, MI 49501-0352

| | | |
|---|---|---|
| In re Application of | : | |
| KENNEDY *et al* | : | |
| U.S. Application No.: 10/526,515 | : | |
| PCT No.: PCT/US03/27804 | : | |
| Int. Filing Date: 04 September 2003 | : | **DECISION** |
| Priority Date: 04 September 2002 | : | |
| Attorney Docket No.: HMI P1191US1 | : | |
| For: SPACE DIVISION SYSTEM | : | |

This decision is in response to applicants' petition under 37 CFR 1.47(a) filed 05 June 2006.

## BACKGROUND

On 04 November 2005, the DO/EO/US mailed a Notification of Missing Requirements Under 35 U.S.C. 371 (Form PCT/DO/EO/905) indicating that an oath or declaration in compliance with 37 CFR 1.497(a) and (b) and a surcharge fee was required. Applicants were given two months to respond with extensions of time available.

On 05 June 2006, applicants filed a response which was accompanied by, *inter alia*, the subject petition, a declaration signed by three of five eight named inventors; an affidavit of Thomas Lockhart; an affidavit of Jodi Russo; a five-month extension and fee; the petition fee of $200.00; and the $130.00 surcharge fee.

## DISCUSSION

Applicants claim that Joseph Chi-Chen Ho and Bill Chen-Hsun Yen cannot be located after a diligent effort and have filed the subject petition in response to the Form PCT/DO/EO/905 mailed 04 November 2005.

A petition under 37 CFR 1.47(a) requires: (1) the petition fee; (2) factual proof that the missing joint inventors cannot be located or refuse to cooperate; (3) a statement of the last known addresses of the nonsigning joint inventors; (4) and an oath or declaration executed by the signing joint inventors on their behalf and on behalf of the nonsigning joint inventors.

Concerning item (1), the petition fee of $200.00 has been paid.

Regarding item (2), applicants' burden in showing that an inventor cannot be located is explained in section 409.03(d) of the MPEP which states, in part:

> Where inability to find or reach a nonsigning inventor 'after diligent effort' is the reason for filing under 37 CFR 1.47, an affidavit or declaration of the facts should be submitted that fully describes the exact facts which are relied on to establish that a diligent effort was made . . .
>
> The statement of facts must be signed, where at all possible, by a person having firsthand knowledge of the facts recited therein. Statements based on hearsay will not normally be accepted. Copies of documentary evidence such as internet searches, certified mail return receipts, cover letters of instructions, telegrams, that support a finding that the nonsigning inventor could not be found or reached should be made part of the statement. The steps taken to locate the whereabouts of the nonsigning inventor should be included in the statement of facts. It is important that the statement contain facts as opposed to conclusions . . .

In this case, petitioners have submitted declarations by Thomas L. Lockhart and Jodi Russo explaining the attempts to locate the nonsigning inventors. These attempts include various telephone and internet searches performed and contacting the nonsigning inventor's former employers for any additional information. Petitioners also provided the requisite documentary evidence in the form of internet searches etc. to substantiate their claim. This evidence is sufficient to show that a diligent effort was made to locate the nonsigning inventors and meet the requirements of the MPEP. Item (2) of 37 CFR 1.47(a) is satisfied.

With regards to item (3), the last known address of co-inventor Joseph Chi-Chen Ho is listed as:

143 Albany Street, #223
Cambridge, MA 02139

The last known address of co-inventor Bill Chen-Hsun Yen is listed as:

5892 169th Ave.
Bellevue, WA 98006

Concerning item (4), the 37 CFR 1.47(a) applicant submitted a declaration signed by three of the five co-inventors on behalf of themselves and the nonsigning joint inventor. This declaration meets the requirements of section 409.03(a) and is in

compliance with 37 CFR 1.497(a) and (b).

All requirements of 37 CFR 1.47(a) are complete.

## CONCLUSION

Applicants' petition under 37 CFR 1.47(a) is **GRANTED**.

Applicants have completed the requirements for acceptance under 35 U.S.C. 371(c). The application has an international filing date of 04 September 2003 under 35 U.S.C. 363, and a 35 U.S.C. 371 date of 05 June 2006.

As provided in 37 CFR 1.47(a), a notice of the filing of this application will be forwarded to the non-signing inventor at his last known address of record and will be published in the Official Gazette.

This application is being forwarded to the National Stage Processing Division of the Office of PCT Operations for continued processing.

James Thomson

James Thomson
Attorney Advisor
Office of PCT Legal Administration

Tel.: (571) 272-3302

UNITED STATES PATENT AND TRADEMARK OFFICE

Commissioner for Patents
United States Patent and Trademark Office
P.O. Box 1450
Alexandria, VA 22313-1450
www.uspto.gov

MAIL

NOV 01 2007

DIRECTOR'S OFFICE
TECHNOLOGY CENTER 2600

BUCHANAN, INGERSOLL & ROONEY PC
POST OFFICE BOX 1404
ALEXANDRIA VA 22313-1404

In re Application of
NEVILL, STUART MICHAEL
Application No. 10/526,544
Filed: March 3, 2005
For: **SUSPENSION FOR THE VOICE COIL OF A LOUDSPEAKER DRIVE UNIT**

DECISION GRANTING PETITION TO RESET PERIOD FOR REPLY

This is a decision on the petition filed on October 1, 2007, requesting that the shortened statutory period for reply set forth in the Office communication mailed on March 29, 2007 be reset.

Petitioner alleges non-receipt of the Official action mailed March 29, 2007. In support of the petition, petitioner states the Official Action was returned to the Patent and Trademark Office on April 2, 2007. Petitioner has also provided a statement that the office communication was not received by the petitioner as evidenced by their docket computer indicating that a response was never docketed for June 29, 2007, the date on which a response would have been due. A copy of the docket record where the non-received office communication would have been entered had it been received and docketed was also provided.

A review of the record indicates that the Office action mailed March 29, 2007 was returned to the Patent and Trademark Office by the U.S. Postal Service as undeliverable. This returned mail is prima facie evidence of non-receipt of the Office action by applicant. Since applicant has responded to the action (apparently retrieved from the Office's PAIR system), the Office action will not be re-mailed. Applicant responded to the Office action on October 1, 2007.

The petition is **GRANTED.**

The application is being forwarded to the examiner for treatment of applicant's response.

Michael Horabik
Quality Assurance Specialist
Technology Center 2600
Communications

27 APR 2006

A5

UNITED STATES PATENT AND TRADEMARK OFFICE

Commissioner for Patents
United States Patent and Trademark Office
P.O. Box 1450
Alexandria, VA 22313-1450
www.uspto.gov

Dorsey & Whitney LLP
555 California Street, Suite 1000
San Francisco, CA 94104

| | | |
|---|---|---|
| In re Application of<br>STARKIE, Bradford<br>Application No.: 10/526,552<br>PCT No.: PCT/AU03/01155<br>Int. Filing Date: 05 September 2003<br>Priority Date: 06 September 2002<br>Attorney Docket No.: 186332/US/RFT<br>For: DEVELOPMENT SYSTEM FOR A DIALOG SYSTEM | :<br>:<br>:<br>:<br>:<br>:<br>: | DECISION ON PETITION |

The petition to revive under 37 CFR 1.137(b) filed 04 April 2006 in the above-captioned application is hereby **GRANTED** as follows:

Applicants' statement that "the entire delay in filing the required reply from the due date for the reply until the filing of a grantable petition under 37 CFR 1.137(b) was unintentional" meets the requirements of 37 CFR 1.137(b)(3).

A review of the application file reveals that applicants have submitted the required reply and the requirements of 37 CFR 1.137(b) have been satisfied. Therefore, the request to revive the application abandoned under 35 U.S.C. 371(d) is granted as to the National stage in the United States of America.

This application is being returned to the United States Designated/Elected Office for processing in accordance with this decision.

Anthony Smith

Anthony Smith
Attorney-Advisor
Office of PCT Legal Administration
Telephone: (571) 272-3298
Facsimile: (571) 273-0459

UNITED STATES PATENT AND TRADEMARK OFFICE

UNITED STATES DEPARTMENT OF COMMERCE
United States Patent and Trademark Office
Address: COMMISSIONER FOR PATENTS
P.O. Box 1450
Alexandria, Virginia 22313-1450
www.uspto.gov

DICKSTEIN SHAPIRO LLP
1825 EYE STREET NW
Washington, DC 20006-5403

Mail Date: 04/30/2010

| | | |
|---|---|---|
| **Applicant** | : Michael J. Evans | : DECISION ON REQUEST FOR |
| **Patent Number** | : 7609208 | : RECALCULATION of PATENT |
| **Issue Date** | : 10/27/2009 | : TERM ADJUSTMENT IN VIEW |
| **Application No** | : 10/526,556 | : OF WYETH AND NOTICE OF INTENT TO |
| **Filed** | : 07/25/2005 | : ISSUE CERTIFICATE OF CORRECTION |
| | | : |

The Request for Recalculation is **GRANTED** to the extent indicated.

The patent term adjustment has been determined to be **826** days. The USPTO will *sua sponte* issue a certificate of correction reflecting the amount of PTA days determined by the recalculation.

Prior to the issuance of the certificate of correction, the USPTO will afford patentee an opportunity to be heard and request reconsideration. Accordingly, patentee has **one month or thirty (30) days**, whichever is longer, to file a request for reconsideration of this patent term adjustment calculation. See 35 U.S.C. 154(b)(3)(B)(ii) and 37 CFR 1.322(a)(4). No extensions of time will be granted under 37 CFR 1.136.

Patentee should use document code PET.OP if electronically filing a request for reconsideration of this patent term adjustment calculation. The patentee must also include the information required by 37 CFR 1.705(b)(2) and the fee required by 37 CFR 1.18(e). If patentee does not file a timely request for reconsideration of this patent term adjustment calculation including the information required by 37 CFR 1.705(b)(2) and the fee required by 37 CFR 1.18(e), the USPTO will issue a certificate of correction reflecting the PTA determination noted above.

Patentee should be aware that in order to preserve the right to review in the United States District Court for the District of Columbia of the USPTO patent term adjustment determination, patentee must ensure that he or she also take the steps required under 35 U.S.C. 154(b)(4)(A) in a timely manner. Nothing in the request for recalculation should be construed as providing an alternative time frame for commencing a civil action under 35 U.S.C. 154(b)(4)(A).

Any questions concerning this decision should be directed to the Office of Patent Legal Administration at 571-272-7702.

UNITED STATES PATENT AND TRADEMARK OFFICE

Commissioner for Patents
United States Patent and Trademark Office
P.O. Box 1450
Alexandria, VA 22313-1450
www.uspto.gov

**Knobbe, Martens, Olson & Bear, LLP**
**2040 Main Street**
**Fourteenth Floor**
**Irvine, CA 92614**

COPY MAILED

JUL 07 2008

| | | |
|---|---|---|
| In re Application of | : | |
| Yoshihiro Ohmiya et al. | : | |
| Application No. 10/526,569 | : | DECISION ON PETITION |
| Filed: March 4, 2005 | : | TO WITHDRAW |
| Attorney Docket No. SAEG129.010APC | : | FROM RECORD |
| | : | |

This is a decision on the Request to Withdraw as attorney or agent under 37 C.F.R. § 1.36(b) or 37 C.F.R. § 10.40 filed May 16, 2008.

The request is **APPROVED**.

A grantable request to withdraw as attorney/agent of record must be signed by every attorney/agent seeking to withdraw or contain a clear indication that one attorney is signing on behalf of another/others. A request to withdraw will not be approved unless at least 30 (thirty) days would remain between the date of approval and the later of the expiration date of a time to file a response or the expiration date of the maximum time period which can be extended under 37 C.F.R. § 1.136(a).

The request to change the correspondence of record is not acceptable as the requested correspondence address is not that of (1) the first named signing inventor; or (2) an intervening assignee of the entire interest under 37 C.F.R. 3.71. Accordingly, all correspondence will be mailed to the first signing inventor. A courtesy copy of this decision will be mailed to the address noted on the request to withdraw.

Applicant is reminded that there is no attorney of record at this time.

Telephone inquires concerning this decision should be directed to Kimberly Inabinet at 571-272-4618.

Kimberly Inabinet
Petitions Examiner
Office of Petitions

cc: Ohmiya Yoshihiro
Ikeda-shi 563-8577
Osaka, Japan

cc: National Institute of Advanced Industrial
Science and Technology
c/o Warren M. Cheek
Wenderoth, Lind & Ponack, LLP
2033 K Street, NW
Washington, DC 20006-1021

UNITED STATES PATENT AND TRADEMARK OFFICE

UNITED STATES DEPARTMENT OF COMMERCE
United States Patent and Trademark Office
Address: COMMISSIONER FOR PATENTS
P.O. Box 1450
Alexandria, Virginia 22313-1450
www.uspto.gov

| APPLICATION NUMBER | FILING OR 371(C) DATE | FIRST NAMED APPLICANT | ATTY. DOCKET NO./TITLE |
|---|---|---|---|
| 10/526,569 | 03/04/2005 | Yoshihiro Ohmiya | SAEG129.010APC |

**CONFIRMATION NO. 4231**

**POWER OF ATTORNEY NOTICE**

20995
KNOBBE MARTENS OLSON & BEAR LLP
2040 MAIN STREET
FOURTEENTH FLOOR
IRVINE, CA 92614

*OC000000030816581*

Date Mailed: 07/07/2008

## NOTICE REGARDING CHANGE OF POWER OF ATTORNEY

This is in response to the Power of Attorney filed 05/16/2008.

- The withdrawal as attorney in this application has been accepted. Future correspondence will be mailed to the new address of record. 37 CFR 1.33.

/kainabinet/

---

Office of Data Management, Application Assistance Unit (571) 272-4000, or (571) 272-4200, or 1-888-786-0101

UNITED STATES PATENT AND TRADEMARK OFFICE

Commissioner for Patents
United States Patent and Trademark Office
P.O. Box 1450
Alexandria, VA 22313-1450
www.uspto.gov

**FISH & NEAVE IP GROUP**
**ROPES & GRAY LLP**
**ONE INTERNATIONAL PLACE**
**BOSTON MA 02110-2624**

COPY MAILED
SEP 0 5 2006
OFFICE OF PETITIONS

| | | |
|---|---|---|
| In re Application of | : | |
| Conway, Patricia Lynne | : | |
| Application No. 10/526,580 | : | ON PETITION |
| Filed: September 12, 2005 | : | |
| Attorney Docket No. BSWV-P01-008 | : | |

This is a decision on the petition under 37 CFR 1.102(d), filed on June 12, 2006, to make the above-identified application special based on applicants who are small entities filing biotechnology applications as set forth in M.P.E.P. § 708.02, Section XII.

The petition is **GRANTED**.

A grantable petition to make an application special under 37 CFR 1.102(d) and MPEP § 708.02, Section XII: Special Status for Applications Relating to Biotechnology Filed by Applicants Who are Small Entities, must be accompanied by (1) the petition fee under 37 CFR 1.17(h); and (2) state:

> (A) That small entity status has been established or include a statement establishing small entity status;
>
> (B) That the subject of the patent application is a major asset of the small entity; and
>
> (C) That the development of the technology will be significantly impaired if examination of the patent application is delayed, including an explanation of the basis for making the statement.

The instant petition satisfies the above requirements. Accordingly, the above-identified application has been accorded "special" status.

Telephone inquiries concerning this decision should be directed to Petitions Examiner Liana Chase at 571-272-3206. All other inquiries concerning either the examination or status of the application should be directed to the Technology Center.

This matter is being referred to the Technology Center Art Unit 1651 for action on the merits commensurate with this decision.

David Bucci
Petitions Examiner
Office of Petitions

UNITED STATES PATENT AND TRADEMARK OFFICE

UNITED STATES DEPARTMENT OF COMMERCE
United States Patent and Trademark Office
Address: COMMISSIONER FOR PATENTS
P.O. Box 1450
Alexandria, Virginia 22313-1450
www.uspto.gov

SALIWANCHIK LLOYD & SALIWANCHIK
A PROFESSIONAL ASSOCIATION
PO Box 142950
GAINESVILLE, FL 32614

Mail Date: 04/20/2010

| | | |
|---|---|---|
| **Applicant** | : Shyam S Mohapatra | : DECISION ON REQUEST FOR |
| **Patent Number** | : 7655772 | : RECALCULATION of PATENT |
| **Issue Date** | : 02/02/2010 | : TERM ADJUSTMENT IN VIEW |
| **Appliction No** | : 10/526,584 | : OF WYETH AND NOTICE OF INTENT TO |
| **Filed** | : 10/11/2005 | : ISSUE CERTIFICATE OF CORRECTION |
| | | : |

The Request for Recalculation is **GRANTED** to the extent indicated.

The patent term adjustment has been determined to be **0** days. The USPTO will *sua sponte* issue a certificate of correction reflecting the amount of PTA days determined by the recalculation.

Prior to the issuance of the certificate of correction, the USPTO will afford patentee an opportunity to be heard and request reconsideration. Accordingly, patentee has **one month or thirty (30) days**, whichever is longer, to file a request for reconsideration of this patent term adjustment calculation. See 35 U.S.C. 154(b)(3)(B)(ii) and 37 CFR 1.322(a)(4). No extensions of time will be granted under 37 CFR 1.136.

Patentee should use document code PET.OP if electronically filing a request for reconsideration of this patent term adjustment calculation. The patentee must also include the information required by 37 CFR 1.705(b)(2) and the fee required by 37 CFR 1.18(e). If patentee does not file a timely request for reconsideration of this patent term adjustment calculation including the information required by 37 CFR 1.705(b)(2) and the fee required by 37 CFR 1.18(e), the USPTO will issue a certificate of correction reflecting the PTA determination noted above.

Patentee should be aware that in order to preserve the right to review in the United States District Court for the District of Columbia of the USPTO patent term adjustment determination, patentee must ensure that he or she also take the steps required under 35 U.S.C. 154(b)(4)(A) in a timely manner. Nothing in the request for recalculation should be construed as providing an alternative time frame for commencing a civil action under 35 U.S.C. 154(b)(4)(A).

Any questions concerning this decision should be directed to the Office of Patent Legal Administration at 571-272-7702.

UNITED STATES PATENT AND TRADEMARK OFFICE

UNITED STATES DEPARTMENT OF COMMERCE
United States Patent and Trademark Office
Address: COMMISSIONER FOR PATENTS
P.O. Box 1450
Alexandria, Virginia 22313-1450
www.uspto.gov

SALIWANCHIK LLOYD & SALIWANCHIK
A PROFESSIONAL ASSOCIATION
PO Box 142950
GAINESVILLE, FL 32614

Mail Date: 05/17/2010

**Applicant** : Shyam S Mohapatra
**Patent Number** : 7655772
**Issue Date** : 02/02/2010
**Application No** : 10/526,584
**Filed** : 10/11/2005

: NOTICE CONCERNING IMPROPER
: CALCULATION OF PATENT TERM
: ADJUSTMENT BASED UPON USPTO
: IMPROPERLY MEASURING REDUCTION
: PERIOD UNDER 37 CFR 1.704(c)(10).

The United States Patent and Trademark Office (USPTO) discovered that in processing the recent recalculation decisions mailed in response to patentee's filed Request for Recalculation of Patent Term Adjustment in view of Wyeth, the USPTO improperly measured the reduction period for reductions under 37 CFR 1.704(c)(10). Pursuant to 37 CFR 1.704(c)(10), patentee's reduction begins on the date of filing the amendment under 37 CFR 1.312 ("1.312 amendment") or other related paper and ends on the date that the Office mails a response to the filing of the 1.312 amendment or other paper. It has been discovered that during the recalculation, the calculation failed to the limit the reduction to the mail date of the response to the 1.312 amendment or other paper. Accordingly, patentee's reductions were greater than warranted.

This notice **VACATES** the previous GRANTED request for recalculation and provides patentee with a revised GRANTED recalculation.

The patent term adjustment has been determined to be **61** days. The USPTO will *sua sponte* issue a certificate of correction reflecting the amount of patent term adjustment (PTA) days determined by the recalculation.

Prior to the issuance of the certificate of correction, the USPTO will afford patentee an opportunity to be heard and request reconsideration. Accordingly, patentee has **one month or thirty (30) days** from the mail date of this notice, whichever is longer, to file a request for reconsideration of this PTA calculation. See 35 U.S.C. § 154(b)(3)(B)(ii) and 37 CFR 1.322(a)(4).

Patentee should use document code PET.OP if electronically filing a request for reconsideration of this PTA calculation. The patentee must also include the information required by 37 CFR 1.705(b)(2), and the fee required by 37 CFR 1.18(e). If patentee does not file a timely request for reconsideration of this PTA calculation, including the information required by 37 CFR 1.705(b)(2) and the fee required by 37 CFR 1.18(e), the USPTO will issue a certificate of correction reflecting the PTA determination noted above.

Patentee should be aware that in order to preserve the right of review of the USPTO's PTA determination in the United States District Court for the District of Columbia, patentee must ensure that the steps required under 35 U.S.C. § 154 (b)(4) are taken in a timely manner. Nothing in the request for recalculation should be construed as providing an alternative time frame for commencing a civil action under 35 U.S.C. § 154(b)(4).

UNITED STATES PATENT AND TRADEMARK OFFICE

Commissioner for Patents
United States Patent and Trademark Office
P.O. Box 1450
Alexandria, VA 22313-1450
www.uspto.gov

13 DEC 2006

Courtney N DeMann
Varnum Riddering Schmidt & Howlett
Bridgewater Place
Post Office Box 352
Grand Rapids MI 49501-0352

In re Application of:
INSALACO, et al.
U.S. Application No.: 10/526,654
PCT No.: PCT/US03/27584
International Filing Date: 04 September 2003
Priority Date: 04 September 2002
Atty Docket No.: HMI P119US1
For: RAIL SYSTEM

DECISION ON PETITION

The petition for revival under 37 CFR 1.137(b) filed 14 November 2006 in the above-captioned application is hereby **GRANTED** as follows:

Applicants' statement that "the entire delay in filing the required reply from the due date for the required reply until the filing of a grantable petition under 37 CFR 1.137(b) was unintentional" satisfies the requirements of 37 CFR 1.137(b)(3).

Applicants' have submitted the required reply, that is, a proper response to the Notification Of Missing Requirements (Form PCT/DO/EO/905) mailed 11 October 2005, and the requirements of 37 CFR 1.137(b) have been satisfied. Therefore, the request to revive the application is granted as to the national stage in the United States.

The present petition was accompanied by payment of a $2,160 extension fee; however, an extension of time fee under 37 CFR 1.136(a) must be filed prior to the expiration of the maximum extendable reply period. See In re Application of S, 8 USPQ2d 1630, 1631 (Comm'r Pats 1988). Since the $2,160 extension fee submitted with the present petition was filed after the maximum extendable period for reply, this fee is unnecessary and will be refunded to petitioner's deposit account.

Finally, it is noted that there appears to be a typographical error in the name of the fourth inventor as listed on the published international application. Specifically, the published international application identifies this inventor as Daniel W. HILLIS. However, the declaration filed by applicants herein on 14 November 2006 identifies this inventor as W. Daniel HILLIS; this is consistent with how the inventor was identified on the PCT Request (Form PCT/RO/101) filed to initiate the international application (the record does not indicate that this name was changed during the international phase).

This application is being referred to the National Stage Processing Division of the Office of PCT Operations for further processing in accordance with this decision. The date under 35 U.S.C. 371(c)(1), (c)(2), and (c)(4) is 14 November 2006.

Richard M. Ross
Attorney Advisor
Office of PCT Legal Administration
Telephone: (571) 272-3296
Facsimile: (571) 273-0459

Repln. Ref: 12/13/2006 SBASHEIR 0010214600
DAB:220257 Name/Number:10526654
FC: 9204 $2160.00 CR

UNITED STATES PATENT AND TRADEMARK OFFICE

COMMISSIONER FOR PATENTS
UNITED STATES PATENT AND TRADEMARK OFFICE
P.O. BOX 1450
ALEXANDRIA, VA 22313-1450
www.uspto.gov

SUGHRUE MION, PLLC
2100 PENNSYLVANIA AVENUE, N.W.
SUITE 800
WASHINGTON DC 20037

COPY MAILED

JUN 19 2008

OFFICE OF PETITIONS

| | | |
|---|---|---|
| In re Patent No. 7,329,771 | : | DECISION ON REQUEST |
| Tanaka et al. | : | FOR RECONSIDERATION OF |
| Issue Date: February 12, 2008 | : | PATENT TERM ADJUSTMENT |
| Application No. 10/526,660 | : | and |
| Filed: March 4, 2005 | : | NOTICE OF INTENT TO ISSUE |
| Atty Docket No. Q86056 | : | CERTIFICATE OF CORRECTION |

This is a decision on the "REQUEST FOR RECONSIDERATION OF THE PATENT TERM ADJUSTMENT PURSUANT TO 37 C.F.R. § 1.705(D)," filed March 5, 2008. Patentees request that the patent term adjustment indicated in the patent be corrected from three hundred ninety-one (391) days to five hundred three (503) days.

The request for reconsideration of the patent term adjustment indicated in the patent is **GRANTED**.

The patent term adjustment indicated in the patent is to be corrected by issuance of a certificate of correction showing a revised Patent Term Adjustment of five hundred three **(503)** days.

On February 12, 2008, the above-identified application matured into U.S. Patent No. 7,329,771. The instant request for reconsideration filed March 5, 2008 was timely filed within two months of the issue date of the patent. See § 1.705(d). The Patent issued with a revised Patent Term Adjustment of 391 days. Patentees dispute the reduction of 112 days entered for an Information Disclosure Statement (IDS) filed October 24, 2007 as

firm records do not show that an IDS was filed on that date or at any time after the Notice of Allowance. Patentees further state that there was no applicant delay in association with the filing of the Issue Fee payment on December 12, 2007.

A review of the PTA calculations for this application reveals that the initial determination of PTA of 503 days was reduced by 112 days for patentees' submission of an IDS after the mailing of the notice of allowance. See 37 CFR 1.704(c) (10). However, a review of the application record supports a conclusion that no IDS (or any other paper, aside from the instant petition and payment of the issue fee) were filed in this application after the mailing of the notice of allowance. Accordingly, the period of reduction of 112 days for applicant delay pursuant to 37 CFR 1.704(c)(10) is not warranted and is being removed.

In view thereof, the patent term adjustment indicated in the patent should have been five hundred three **(503)** days.

The Office acknowledges submission of the $200.00 fee set forth in 37 CFR 1.18(e). No additional fees are required.

The application file is being forwarded to the Certificates of Correction Branch for issuance of a certificate of correction in order to rectify this error. The Office will issue a certificate of correction indicating that the term of the above-identified patent is extended or adjusted by FIVE HUNDRED THREE (503) days.

Telephone inquiries specific to this matter should be directed to the undersigned at (571) 272-3219.

Nancy Johnson

Nancy Johnson
Senior Petitions Attorney
Office of Petitions

Enclosure: Copy of DRAFT Certificate of Correction

UNITED STATES PATENT AND TRADEMARK OFFICE

# CERTIFICATE OF CORRECTION

PATENT : 7,329,771 B2

DATED : **February 12, 2008**

INVENTOR(S) : Tanaka et al.

DRAFT

It is certified that error appears in the above-identified patent and that said Letters Patent is hereby corrected as shown below:

On the cover page,

[*] Notice: Subject to any disclaimer, the term of this patent is extended or adjusted under 35 USC 154(b) by 391 days

Delete the phrase "by 391 days" and insert – by 503 days--

Day : Friday
Date: 6/13/2008

# PALM INTRANET

Time: 16:04:05

| PTA Calculations for Application: 10/526660 | | | |
|---|---|---|---|
| Application Filing Date: | 03/04/2005 | PTO Delay (PTO): | 503 |
| Issue Date of Patent: | 02/12/2008 | Three Years: | 0 |
| Pre-Issue Petitions: | 0 | Applicant Delay (APPL): | 112 |
| Post-Issue Petitions: | 0 | Total PTA (days): | 503 |
| PTO Delay Adjustment: | 112 | | |

**File Contents History**

| Number | Date | Contents Description | PTO | APPL | START |
|---|---|---|---|---|---|
| 49 | 06/13/2008 | ADJUSTMENT OF PTA CALCULATION BY PTO | 112 | | |
| 42 | 02/12/2008 | PATENT ISSUE DATE USED IN PTA CALCULATION | | | |
| 41 | 10/24/2007 | REFERENCE CAPTURE ON IDS | | | |
| 40 | 10/24/2007 | INFORMATION DISCLOSURE STATEMENT (IDS) FILED | | 112 | |
| 39 | 01/11/2008 | EXPORT TO FINAL DATA CAPTURE | | | |
| 38 | 01/10/2008 | DISPATCH TO FDC | | | |
| 37 | 01/08/2008 | APPLICATION IS CONSIDERED READY FOR ISSUE | | | |
| 36 | 12/17/2007 | ISSUE FEE PAYMENT VERIFIED | | | |
| 35 | 12/17/2007 | ISSUE FEE PAYMENT RECEIVED | | | |
| 34 | 10/22/2007 | FINISHED INITIAL DATA CAPTURE | | | |
| 33 | 09/25/2007 | EXPORT TO INITIAL DATA CAPTURE | | | |
| 32 | 09/25/2007 | MAIL MISCELLANEOUS COMMUNICATION TO APPLICANT | | | |
| 31 | 09/25/2007 | MAIL EXAMINER'S AMENDMENT | | | |
| 30 | 09/21/2007 | EXAMINER'S AMENDMENT COMMUNICATION | | | |
| 29 | 09/21/2007 | MISCELLANEOUS COMMUNICATION TO APPLICANT - NO ACTION COUNT | | | |
| 28 | 09/19/2007 | MAIL NOTICE OF ALLOWANCE | 503 | | -1 |
| 27 | 09/19/2007 | MAIL EXAMINER'S AMENDMENT | | | |
| 26 | 09/14/2007 | ISSUE REVISION COMPLETED | | | |
| 25 | 09/14/2007 | DOCUMENT VERIFICATION | | | |
| 24 | 09/14/2007 | NOTICE OF ALLOWANCE DATA VERIFICATION COMPLETED | | | |
| 23 | 09/14/2007 | CASE DOCKETED TO EXAMINER IN GAU | | | |
| 22 | 09/04/2007 | EXAMINER'S AMENDMENT COMMUNICATION | | | |

| | | | | | |
|---|---|---|---|---|---|
| 21 | 09/04/2007 | NOTICE OF ALLOWABILITY | | | |
| 20 | 03/04/2005 | INFORMATION DISCLOSURE STATEMENT CONSIDERED | | | |
| 19 | 07/21/2007 | CASE DOCKETED TO EXAMINER IN GAU | | | |
| 18 | 07/11/2007 | CASE DOCKETED TO EXAMINER IN GAU | | | |
| 17 | 07/03/2007 | TRANSFER INQUIRY TO GAU | | | |
| 16 | 05/15/2007 | CASE DOCKETED TO EXAMINER IN GAU | | | |
| 15 | 04/02/2007 | CASE DOCKETED TO EXAMINER IN GAU | | | |
| 14 | 03/31/2007 | CASE DOCKETED TO EXAMINER IN GAU | | | |
| 13 | 09/02/2006 | CASE DOCKETED TO EXAMINER IN GAU | | | |
| 12 | 07/06/2006 | CORRESPONDENCE ADDRESS CHANGE | | | |
| 11 | 06/16/2006 | IFW TSS PROCESSING BY TECH CENTER COMPLETE | | | |
| 10 | 03/04/2005 | PRELIMINARY AMENDMENT | | | |
| 9 | 03/04/2005 | REFERENCE CAPTURE ON IDS | | | |
| 8.7 | 03/04/2005 | INFORMATION DISCLOSURE STATEMENT (IDS) FILED | | | |
| 8 | 03/04/2005 | INFORMATION DISCLOSURE STATEMENT (IDS) FILED | | | |
| 7 | 03/12/2006 | CLEARED BY OIPE CSR | | | |
| 6 | 03/12/2006 | CLEARED BY OIPE CSR | | | |
| 5 | 03/12/2006 | CLEARED BY OIPE CSR | | | |
| 4 | 03/04/2005 | 371 COMPLETION DATE | | | |
| 3 | 09/06/2005 | APPLICATION DISPATCHED FROM OIPE | | | |
| 2 | 09/06/2005 | NOTICE OF DO/EO ACCEPTANCE MAILED | | | |
| 1 | 03/04/2005 | INITIAL EXAM TEAM NN | | | |

**Search Another: Application#** Search

**EXPLANATION OF PTA CALCULATION**

**EXPLANATION OF PTE CALCULATION**

To go back, right click here and select Back. To go forward, right click here and select Forward. To refresh, right click here and select Refresh.

Back to OASIS | Home page

26 JUL 2005

UNITED STATES PATENT AND TRADEMARK OFFICE

COMMISSIONER FOR PATENTS
UNITED STATES PATENT AND TRADEMARK OFFICE
P.O. BOX 1450
ALEXANDRIA, VA 22313-1450
www.uspto.gov

Ellen E. Fielitz
Ratner Prestia
P.O. Box 980
Valley Forge, PA 19482

| | | |
|---|---|---|
| In re Application of | : | |
| RIETH et al. | : | |
| Application No.: 10/526,662 | : | DECISION ON PETITION |
| PCT No.: PCT/EP03/08841 | : | UNDER 37 CFR 1.137(b) |
| Int. Filing Date: 08 August 2003 | : | |
| Priority Date: 13 August 2002 | : | |
| Attorney Docket No.: PC10495US | : | |
| For: ELECTROMECHANICALLY-OPERATED DISC BRAKE FOR MOTOR VEHICLES | | |

The petition to revive under 37 CFR 1.137(b) filed 04 March 2005 in the above-captioned application is hereby **GRANTED** as follows:

Applicants' statement that "the entire delay in filing the required reply from the due date for the reply until the filing of a grantable petition under 37 CFR 1.137(b) was unintentional" meets the requirements of 37 CFR 1.137(b)(3).

A review of the application file reveals that applicants have submitted the basic national fee and the requirements of 37 CFR 1.137(b) have been satisfied. Therefore, the request to revive the application abandoned under 35 U.S.C. 371(d) is granted as to the National stage in the United States of America.

This application is being returned to the United States Designated/Elected Office for processing in accordance with this decision.

Anthony Smith
Attorney-Advisor
Office of PCT Legal Administration
Tel.: 571-272-3298
Facsimile: 571-273-0459

17 FEB 2009

United States Patent and Trademark Office

Commissioner for Patents
United States Patent and Trademark Office
P.O. Box 1450
Alexandria, VA 22313-1450
www.uspto.gov

Connolly Bove Lodge & Hutz LLP
1875 Eye Street, NW, Suite 1100
Washington, DC 20036-3425

| | | |
|---|---|---|
| In re Application of | : | |
| Lepine | : | |
| Application No.: 10/526,666 | : | |
| PCT No.: PCT/FR2003/002653 | : | |
| Int. Filing Date: 05 September 2003 | : | DECISION |
| Priority Date: 05 September 2002 | : | |
| Attorney Docket No.: 21424-00012-US1 | : | |
| For: Wristwatch | : | |

This is with regard to the petition filed on 04 November 2008, which seeks relief under 37 CFR 1.181 or, alternatively, 37 CFR 1.137(b).

## BACKGROUND

This international application was filed on 05 September 2003, designated the United States, and claimed an earliest priority date of 05 September 2002. Accordingly, the 30 month time period for paying the basic national fee in the United States expired at midnight on 05 March 2005. This international application became abandoned with respect to the national stage in the United States for failure to timely pay the basic national fee, as of midnight on 05 March 2005.

On 20 July 2005, a Notification of Abandonment (Form PCT/DO/EO/909) was mailed, reflecting the abandonment of the application with respect to the U.S.

On 25 August 2005, another Notification of Abandonment (Form PCT/DO/EO/909) was mailed, reflecting the abandonment of the application with respect to the U.S.

## DISCUSSION

*Petition Under 37 CFR 1.181*

Petitioner requests withdrawal of the holding of abandonment, on the basis that the Notifications of Abandonment were mailed to the address associated with Customer No. 20678, rather than 30678. Inspection of the Transmittal Letter and ADS filed on 04 March 2005 reveal that both identify Customer No. 30678 as the correspondence address; accordingly, the Notifications mailed on 20 July 2005 and 25 August 2005 were sent to the wrong address. As such, they were defective, and they are hereby **VACATED**. However, counsel is respectfully advised that this international application became abandoned with respect to the national stage in the United States under 35 U.S.C. 371(d) as of midnight on 05 March 2005, one day after the filing of correspondence on 04 March 2005 (and prior to the mailing of the Notifications of Missing Requirements). Thus, the erroneous entry of the correspondence address into the records of the USPTO, and the erroneous mailings of the Notifications of Abandonment noted above, did not affect the fact of abandonment (that is, the application would have been regarded

as abandoned regardless of the correspondence address). As such, it would not be appropriate to withdraw the holding of abandonment on the basis of the present record.

*Petition Under 37 CFR 1.137(b)*

Petitioner requests alternative relief under 37 CFR 1.137(b).

Petitioner states that "the entire delay in filing the required reply from the due date for the required reply until the filing of a grantable petition under 37 CFR 1.137(b) was unintentional." Said statement is being accepted in satisfaction of 37 CFR 1.137(b)(3).

Applicant has filed the required reply in the form of the basic national fee. The fee authorization included in the petition is interpreted to grant authority to charge the petition fee. Therefore, the request to revive the application abandoned under 35 U.S.C. 371(d) is **granted** as to the national stage in the United States of America.

Counsel's Deposit Account No. 22-0185 is being charged in the amounts of $810.00 (fee code 2453), $65.00 (fee cord 2617) and $130.00 (fee code 1618) for the petition fee, surcharge under 37 CFR 1.492(h) and processing fee under 37 CFR 1.492(i), respectively.

## DECISION

The petition under 37 CFR 1.181 is **DISMISSED**, without prejudice.

The petition under 37 CFR 1.137(b) is **GRANTED**.

This application is being forwarded to the Office of Patent Application Processing for further processing, including the correction of the correspondence address to the address associated with Customer No. 30678. The date of the application under 35 U.S.C. 371(c)(1), (2) and (4) is **04 November 2008**.

/George Dombroske/
George Dombroske
PCT Legal Examiner
Office of PCT Legal Administration
Tel: (571) 272-3283
Fax: (571) 273-0459

#8

UNITED STATES PATENT AND TRADEMARK OFFICE

Commissioner for Patents
United States Patent and Trademark Office
P.O. Box 1450
Alexandria, VA 22313-1450
www.uspto.gov

29 DEC 2005

FINNEGAN, HENDERSON, FARABOW, GARRETT & DUNNER, L.L.P.
901 New York Ave., N.W.
Washington, DC 20001-4413

| | |
|---|---|
| In re Application of<br>DE LA POTERIE, Valerie *et al*<br>U.S. Application No.: 10/526,675<br>PCT No.: PCT/FR2003/02480<br>Int. Filing Date: 06 August 2003<br>Priority Date: 06 September 2002<br>Attorney Docket No.: 08048-0067<br>For: MAKE-UP COMPOSITION FOR KERATIN FIBERS SUCH AS EYELASHES | **DECISION** |

This decision is in response to the "Petition to Correct International Application Number Under 37 C.F.R. §1.182" ("Pet.") filed on 26 September 2005.

## BACKGROUND

On 04 March 2005, petitioners filed a national stage application listing the PCT application number on the transmittal letter (Form PTO-1390) as PCT/FR2003/02780. All other identifying indications in the application including the specification were for international application PCT/FR2003/02480.

On 25 July 2005, the United States Designated/Elected Office (DO/EO/US) mailed a Notification of Missing Requirements Under 35 U.S.C. 371 (Form PCT/DO/EO/905) indicating, *inter alia*, that a declaration in compliance with 37 CFR 1.497(a) and (b), a $130.00 processing fee and a $130.00 surcharge fee must be provided. The international application number was listed as PCT/FR03/02780. Applicants were given two months to respond with extensions of time available under 37 CFR 1.136(a).

On 26 September 2005, applicants submitted an executed declaration and surcharge fee along with subject petition to correct the international application number in the above-captioned application.

## DISCUSSION

In the petition, applicants state that the transmittal letter "incorrectly identified the subject PCT application as International Application No. PCT/FR2003/02780 rather than as PCT/FR2003/02480." Pet. at ¶ 3.

Despite this error, petitioners argue that the national phase application as filed is sufficient to identify the correct International Application No. PCT/FR2003/02480. This request is treated as a petition under 37 CFR 1.182. The $400.00 petition fee has been paid.

A review of the above-captioned application file verifies that the wrong U.S. application number, PCT/FR2003/02780, was designated on the transmittal letter filed with the original papers. However, all other indications on the transmittal letter including the inventors, title, international filing date and priority date are for PCT/FR2003/02480. Moreover, the English translation of the specification submitted with the application was for PCT/FR2003/02480.

Hence, it is clear that the subject application was a national stage of PCT/FR2003/02480, not PCT/FR2003/02780 and the international application number listed on the transmittal letter was wrong.

## CONCLUSION

For the reasons listed above, the petition under 37 CFR 1.182 to correct the PCT application number listed on the transmittal letter is **GRANTED**.

Petitioners are reminded to use **PCT/FR2003/02480** for all future correspondence regarding this application.

This application is being forwarded to the National Stage Processing Division of the Office of PCT Operations for continued processing.

James Thomson

James Thomson
Attorney Advisor
Office of PCT Legal Administration

Tel.: (571) 272-3302

UNITED STATES PATENT AND TRADEMARK OFFICE

Commissioner for Patents
United States Patent and Trademark Office
P.O. Box 1450
Alexandria, VA 22313-1450
www.uspto.gov

MOETTELI & ASSOCIATES SARL
ST. LEONHARDSTRASSE 4
ST. GALLEN CH-90-00 CH SWITZERLAND

**COPY MAILED**

NOV 30 2006

**OFFICE OF PETITIONS**

| | | |
|---|---|---|
| In re Application of | : | |
| Yves Desarzens et al | : | |
| Application No. 10/526,683 | : | DECISION ON PETITION |
| Filed: November 6, 2005 | : | TO MAKE SPECIAL UNDER |
| Attorney Docket No. 1.P566.34 | : | 37 CFR 1.102(c)(1) |
| | : | |

This is a decision on the petition under 37 CFR 1.102(c)(1), filed June 23, 2006, to make the above-identified application special based on applicant's age as set forth in M.P.E.P. § 708.02, Section IV.

The petition is **GRANTED**.

A grantable petition to make an application special under 37 CFR 1.102(c)(1) and MPEP § 708.02, Section IV: Applicant's Age must be accompanied by evidence showing that at least one of the applicants is 65 years of age, or more, such as a birth certificate or a statement by applicant. No fee is required

The instant petition includes a statement from Inventor Andre Lechot stating that he is over 65 years of age. Accordingly, the above-identified application has been accorded "special" status.

Telephone inquiries concerning this decision should be directed to Irvin Dingle at 571-272-3210.

All other inquiries concerning either the examination or status of the application should be directed to the Technology Center.

The application is being forwarded to the Technology Center Art Unit 3733 for action on the merits commensurate with this decision.

Irvin Dingle
Petitions Examiner
Office of Petitions

United States Patent and Trademark Office

Commissioner for Patents
United States Patent and Trademark Office
P.O. Box 1450
Alexandria, VA 22313-1450
www.uspto.gov

28 AUG 2007

INTERVET INC.
PATENT DEPARTMENT
PO BOX 318
MILLSBORO DE 19966-0318

| | | |
|---|---|---|
| In re Application of | : | |
| Hein et al. | : | |
| Application No.: 10/526,706 | : | |
| PCT No.: PCT/US03/31901 | : | |
| Int. Filing Date: 09 October 2003 | : | DECISION |
| Priority Date: 09 October 2002 | : | |
| Attorney Docket No.: 2002.028 WO | : | |
| For: Methods Of Treating And Preventing Neuro- | : | |
| logical Symptoms Caused By Avian Retrovirus And | : | |
| And Novel Associated Characteristics | : | |

This is in response to the correspondence filed on 09 April 2007, which is being treated as a petition under 37 CFR 1.182.

## DISCUSSION

In a decision on 14 September 2006, the petition to withdraw the holding of abandonment, filed on 28 September 2006, was granted.

In the same decision, the declaration of record was not accepted, without prejudice, because

> With regard to the issues concerning the declaration as it pertains to inventor "Van De Zande, Saskia," nominated in the published international application and discussed in the Decision mailed on 16 August 2005, the "Declaration of William P. Ramey, III" filed on 14 October 2005, Atty. Ramey states that "The names 'Saskia, Marc Antoinette van de Zande' and 'van de Zande, Saskia' refer to the same inventor." Atty. Ramey characterizes the discrepancy as a "typographical error" and declares "that any such error that has occurred was inadvertent and arose without deceptive intent." Atty. Ramey further indicates that "I have been informed and believe that the Office has determined this difference in presentation of Saskia van de Zande's name to be more than a typographical error." Applicants' attention is directed to MPEP § 605.04(b), which states in part that
>
> *Except for correction of a typographical or transliteration error in the spelling of an inventor's name, a request to have the name changed from the typewritten version to the signed version or any other corrections in the name of the inventor(s) will not be entertained, unless accompanied by a petition under 37 CFR 1.182 together with an appropriate petition fee.*
>
> See also MPEP § 201.03(b). Since applicants have not formally petitioned for relief under 37 CFR 1.182, it would not be appropriate to excuse the discrepancy in this inventor's name on the basis of the present record. As such, petitioner is required to respond with a formal petition under 37 CFR 1.182 or else with an oath or declaration executed by the same inventive entity nominated by the published international application and otherwise in compliance with 37 CFR 1.497(a) and (b).

Petitioner urges that the declaration filed on 04 March 2005 be accepted because the "Saskia, Marc, Antoinette Van de Zande" named in the declaration is allegedly the same person as the "VAN DE ZANDE, Saskia" nominated in the published international application. In support, counsel provides a copy of a "Declaration of William P. Ramey, III" dated "10/11/05" which states that Mr. Ramey inadvertently made the "typographical error" in the inventor's name.

Despite the evidence and argument advanced by petitioner, it is still not clear whether the inventor's surname is "Saskia" or whether it is "Zande" (or "Van de Zande"), as this has not been clearly stated on the record. Note that the comma appearing after "Saskia" on the declaration document implies that "Saskia" is a surname. Also, it is not clear whether Mr. Ramey is stating that the two names refer to the same inventor on the basis of first-hand knowledge; or merely on the basis of information and belief. Petitioner is advised that it is normally appropriate to furnish a statement signed by the inventor in question attesting to the fact that the name on the executed declaration and the name on the published application refer to the same inventor. Finally, it is noted that the declaration document appears to have been assembled by adding the page signed by "Saskia, Marc, Antoinette Van de Zande" (which is in one font) to the remaining pages, which are in another font. MPEP 201.03 states in part that

> An oath or declaration under 37 CFR 1.63 by each actual inventor must be presented. While each inventor need not execute the same oath or declaration, each oath or declaration executed by an inventor must contain a complete listing of all inventors so as to clearly indicate what each inventor believes to be the appropriate inventive entity. Where individual declarations are executed, they must be submitted as individual declarations rather than combined into one declaration. For example, where the inventive entity is A and B, a declaration may not be executed only by A naming only A as the inventor and a different declaration may not be executed only by B naming only B as the inventor, which two declarations are then combined into one declaration with a first page of boiler plate, a second page with A's signature, and a second page with B's signature (so that it appears that the declaration was executed with the entire inventive entity appearing in the declaration when it did not).

For all of these reasons, it still would not be appropriate to accept the declaration filed on 04 March 2005 at this time.

## CONCLUSION

The petition under 37 CFR 1.182 is **DISMISSED**, without prejudice.

If reconsideration on the merits of this matter is desired, a proper response must be filed within **TWO (2) MONTHS** from the mail date of this decision. Extensions of time under 37 CFR 1.136(a) are available. Failure to timely respond will result in **ABANDONMENT**.

Please direct any further correspondence with respect to this matter to the Assistant Commissioner for Patents, Mail Stop PCT, P.O. Box 1450, Alexandria, VA 22313-1450, and address the contents of the letter to the attention of the PCT Legal Office.

George Dombroske
PCT Legal Examiner
Office of PCT Legal Administration
Tel: (571) 272-3283
Fax: (571) 273-0459

07 JAN 2008

United States Patent and Trademark Office

Commissioner for Patents
United States Patent and Trademark Office
P.O. Box 1450
Alexandria, VA 22313-1450
www.uspto.gov

INTERVET INC.
PATENT DEPARTMENT
PO BOX 318
MILLSBORO DE 19966-0318

| | | |
|---|---|---|
| In re Application of | : | |
| Hein et al. | : | |
| Application No.: 10/526,706 | : | |
| PCT No.: PCT/US03/31901 | : | |
| Int. Filing Date: 09 October 2003 | : | DECISION |
| Priority Date: 09 October 2002 | : | |
| Attorney Docket No.: 2002.028 WO | : | |
| For: Methods Of Treating And Preventing Neuro- | : | |
| logical Symptoms Caused By Avian Retrovirus And | : | |
| And Novel Associated Characteristics | : | |

This is in response to the petition under 37 CFR 1.182 filed on 28 November 2007.

## DISCUSSION

In a decision on 28 August 2007, the petition under 37 CFR 1.182, filed on 09 April 2007, was dismissed, without prejudice, because

> Petitioner urges that the declaration filed on 04 March 2005 be accepted because the "Saskia, Marc, Antoinette Van de Zande" named in the declaration is allegedly the same person as the "VAN DE ZANDE, Saskia" nominated in the published international application. In support, counsel provides a copy of a "Declaration of William P. Ramey, III" dated "10/11/05" which states that Mr. Ramey inadvertently made the "typographical error" in the inventor's name.
>
> Despite the evidence and argument advanced by petitioner, it is still not clear whether the inventor's surname is "Saskia" or whether it is "Zande" (or "Van de Zande"), as this has not been clearly stated on the record. Note that the comma appearing after "Saskia" on the declaration document implies that "Saskia" is a surname. Also, it is not clear whether Mr. Ramey is stating that the two names refer to the same inventor on the basis of first-hand knowledge, or merely on the basis of information and belief. Petitioner is advised that it is normally appropriate to furnish a statement signed by the inventor in question attesting to the fact that the name on the executed declaration and the name on the published application refer to the same inventor. Finally, it is noted that the declaration document appears to have been assembled by adding the page signed by "Saskia, Marc, Antoinette Van de Zande" (which is in one font) to the remaining pages, which are in another font...

In response, petitioner has filed a new declaration document nominating Saskia Van De Zande using the same name as shown in the published international application. Petitioner also

has clearly stated that the inventor's last name is "VAN DE ZANDE." Therefore, it would be appropriate to accept the spelling as it appears on the newly submitted declaration document. The declaration document filed on 28 November 2007 has been executed only by Saskia Van De Zande. As pointed out previously, the previous declaration document of record was defective in that it appeared to have been assembled by adding the page signed by "Saskia, Marc, Antoinette Van de Zande" (which is in one font) to the remaining pages, which are in another font. Therefore, it is not clear that the other inventors had the benefit of signing a declaration listing the entire inventive entity. Petitioner should provide a declaration (for instance, another copy of the 28 November 2007 declaration document) signed by the remaining inventors. See MPEP 201.03. Since a declaration properly naming the entire inventive entity has not been executed by all of the inventors, it would not be appropriate to grant the requested relief at this time.

## CONCLUSION

The petition under 37 CFR 1.182 is **DISMISSED**, without prejudice.

If reconsideration on the merits of this matter is desired, a proper response must be filed within **TWO (2) MONTHS** from the mail date of this decision. Extensions of time under 37 CFR 1.136(a) are available. Failure to timely respond will result in **ABANDONMENT**.

Please direct any further correspondence with respect to this matter to the Assistant Commissioner for Patents, Mail Stop PCT, P.O. Box 1450, Alexandria, VA 22313-1450, and address the contents of the letter to the attention of the PCT Legal Office.

George Dombroske
PCT Legal Examiner
Office of PCT Legal Administration
Tel: (571) 272-3283
Fax: (571) 273-0459

16 AUG 2005

United States Patent and Trademark Office

#5

Commissioner for Patents
United States Patent and Trademark Office
P.O. Box 1450
Alexandria, VA 22313-1450
www.uspto.gov

William P. Ramey III
AKZO NOBEL, N.V.
P.O. Box 318
405 State Street
Millsboro, DE 19966

In re Application of
Hein et al.
Application No.: 10/526,706
PCT No.: PCT/US03/31901
Int. Filing Date: 09 October 2003
Priority Date: 09 October 2002
Attorney Docket No.: 2002.028 WO
For: Methods Of Treating And Preventing Neurological Symptoms Caused By Avian Retrovirus And And Novel Associated Characteristics

DECISION

This is a decision on the "Request to Change Inventorship" filed on 05 April 2005 and the "Supplemental Consent of the Assignee" filed on 29 April 2005, which are being treated under 37 CFR 1.497(d).

## DISCUSSION

This international application was filed on 09 October 2003 and claimed a priority date of 09 October 2002. The United States was designated. Consequently, the thirty month period for payment of the basic national fee in the United States expired as of midnight on 11 April 2005 (since 09 April 2005 was a Saturday). On 04 March 2005, applicants filed *inter alia* the basic national fee.

## DISCUSSION

The declaration of the inventors filed on 04 March 2005 lists inventors ("Saskia, Marc, Antoinette Van De Zande" and Phyllis A. Lynch) whose names do not appear in the published international application, while the published international application names "Van De Zande, Saskia," whose name does not appear in the declaration. No Form PCT/IB/306 reflecting the recording of these changes is present in the application file. It is noted that the Request to Change Inventorship refers to one of the inventors as "Saskia Zande," which resembles both "Saskia, Marc, Antoinette Van De Zande" and "Van De Zande, Saskia." *See also* the "Written Consent of Assignee" and the "Supplemental Written Consent of Assignee," which both name "Saskia Zande." In that this is clearly more than a mere typographic error or phonetic misspelling of applicant's name, a proper petition under 37 CFR 1.182 (including the requisite $400.00 petition fee) is required to resolve the discrepancy in the name of this inventor. Such a petition should include, if appropriate, verified statements by the inventors and any other individuals having first-hand knowledge of the specific circumstances concerning how and when the error was made and discovered, and must also state (if appropriate) that the error was inadvertent and made without deceptive intent.

With regard to Phyllis A. Lynch, since the inventive entity named in the declaration differs from that named in the published international application in the sense that Phyllis A. Lynch was not named in the published international application, treatment under 37 CFR 1.497(d) is proper. A declaration filed under 37 CFR 1.497 (d) must be by the actual inventor or inventors as required under 37 CFR 1.63 or as permitted by 37 CFR 1.42, 1.43 or 1.47. The declaration must be accompanied by (1) statement from each person being added as an inventor and from each person being deleted as an inventor that the error in inventorship occurred without deceptive intention on his or her part, (2) the processing fee set forth in 37 CFR 1.17; and (3) if an assignment has been executed by any of the original named inventors, the

written consent of the assignee (*See* 37 CFR 3.73(b)). *See* Section 201.03 of the Manual of Patent Examining Procedure (M.P.E.P.).

Regarding requirement (1), applicants have provided such a statement.

Regarding requirement (2), the required processing fee is being charged to counsel's Deposit Account No. 02-2334, as authorized in the instant Request to Change Inventorship.

Regarding requirement (3), applicants have furnished a "Written Consent of Assignee, AKZO NOBEL N.V.," which states in part that it is intended to be signed by Hans Mestrom, who is represented to have authority to consent to the change in inventorship on behalf of AKZO NOBEL N.V. However, the "Written Consent" is signed, not by Hans Mestrom, but by "William P. Ramey, III" in the capacity of "Patent Counsel for Akzo Nobel N.V." This document is not acceptable because it is signed by a person other than the person allegedly making the statements therein. However, applicants have also furnished a "Supplemental Written Consent..." filed on 29 April 2005 and signed by Mr. Ramey, stating that he enjoys "the authority to consent to the request to correct inventorship in PCT/US03/31901 filed herewith and do consent to the change in inventorship." This document is acceptable to the extent that it evidences the assignee's consent to a change in inventorship. However, 37 CFR 3.73(b)(1) requires that assignee must establish its ownership of the application by furnishing either

> (i) Documentary evidence of a chain of title from the original owner to the assignee (e.g., copy of an executed assignment). The documents submitted to establish ownership may be required to be recorded pursuant to § 3.11 in the assignment records of the Office as a condition to permitting the assignee to take action in a matter pending before the Office; or
>
> (ii) A statement specifying where documentary evidence of a chain of title from the original owner to the assignee is recorded in the assignment records of the Office (e.g., reel and frame number).

The instant "Request to Change Inventorship" is accompanied neither by documentary evidence of a chain of title nor by a statement specifying where such documentary evidence is recorded in the USPTO. Therefore, applicants have not satisfied the requirements of 37 CFR 3.73(b)(1) and requirement (3)(*supra*) of 37 CFR 1.497(d).

## CONCLUSION

The declaration is **NOT ACCEPTED** under 37 CFR 1.497 (d).

If reconsideration on the merits of this matter is desired, a proper response must be filed within **TWO (2) MONTHS** from the mail date of this decision. Extensions of time are available under 37 CFR 1.136(a). Failure to timely reply will result in **ABANDONMENT** of this application. Any reconsideration request should include a cover letter entitled "Renewed Submission Under 37 CFR 1.497(d)". No additional processing fee is required.

Please direct any further correspondence with respect to this matter to the Assistant Commissioner for Patents, Mail Stop PCT, P.O. Box 1450, Alexandria, VA 22313-1450, and address the contents of the letter to the attention of the PCT Legal Office.

Richard Cole
PCT Legal Examiner
PCT Legal Office

George M. Dombroske
PCT Legal Examiner
PCT Legal Office
Tel: (571) 272-3283
Fax: (571) 273-0459

#8

United States Patent Trademark Office

Commissioner for Patents
United States Patent and Trademark Office
P.O. Box 1450
Alexandria, VA 22313-1450
www.uspto.gov

14 SEP 2006

INTERVET INC.
PATENT DEPARTMENT
PO BOX 318
MILLSBORO DE 19966-0318

| | | |
|---|---|---|
| In re Application of | : | |
| Hein et al. | : | |
| Application No.: 10/526,706 | : | |
| PCT No.: PCT/US03/31901 | : | |
| Int. Filing Date: 09 October 2003 | : | COMMUNICATION |
| Priority Date: 09 October 2002 | : | |
| Attorney Docket No.: 2002.028 WO | : | |
| For: Methods Of Treating And Preventing Neuro- | : | |
| logical Symptoms Caused By Avian Retrovirus And | : | |
| And Novel Associated Characteristics | : | |

This is in response to the "Request For Status" filed on 11 September 2006.

## DISCUSSION

In a decision mailed on 16 August 2005, the "Request to Change Inventorship" filed on 05 April 2005 and the "Supplemental Consent of the Assignee" filed on 29 April 2005 were treated under 37 CFR 1.497(d). The decision set a time period for response as follows:

> If reconsideration on the merits of this matter is desired, a proper response must be filed within **TWO (2) MONTHS** from the mail date of this decision. Extensions of time are available under 37 CFR 1.136(a). Failure to timely reply will result in **ABANDONMENT** of this application. Any reconsideration request should include a cover letter entitled "Renewed Submission Under 37 CFR 1.497(d)". No additional processing fee is required.

The instant correspondence "requests the status of the above-identified application" and indicates that "Applicants filed a Response to the August 16, 2005 Decision on the 'Request to Change Inventorship' filed on April 5 and April 29, 2005. To date no supplemental or amended petition decision or Office Action has been received." Review of the application file reveals that no such "Response" is present. As such, this international application stands **ABANDONED** with respect to the national stage in the United States for failure to timely reply to the Decision mailed on 16 August 2005.

## CONCLUSION

The application is **ABANDONED**.

Please direct any further correspondence with respect to this matter to the Assistant Commissioner for Patents, Mail Stop PCT, P.O. Box 1450, Alexandria, VA 22313-1450, and address the contents of the letter to the attention of the PCT Legal Office.

Boris Milef
PCT Legal Examiner
Office of PCT Legal Administration

George M. Dombroske
PCT Legal Examiner
Office of PCT Legal Administration
Tel: (571) 272-3283
Fax: (571) 273-0459

#10

United States Patent and Trademark Office

Commissioner for Patents
United States Patent and Trademark Office
P.O. Box 1450
Alexandria, VA 22313-1450
www.uspto.gov

08 JAN 2007

INTERVET INC.
PATENT DEPARTMENT
PO BOX 318
MILLSBORO DE 19966-0318

| | |
|---|---|
| In re Application of<br>Hein et al.<br>Application No.: 10/526,706<br>PCT No.: PCT/US03/31901<br>Int. Filing Date: 09 October 2003<br>Priority Date: 09 October 2002<br>Attorney Docket No.: 2002.028 WO<br>For: Methods Of Treating And Preventing Neuro-logical Symptoms Caused By Avian Retrovirus And And Novel Associated Characteristics | DECISION |

This is in response to the petition to withdraw holding of abandonment and renewed submission under 37 CFR 1.497(d) filed on 28 September 2006.

## DISCUSSION

In a communication mailed on 14 September 2006, the "Request For Status" filed on 11 September 2006 was addressed as follows:

> In a decision mailed on 16 August 2005, the "Request to Change Inventorship" filed on 05 April 2005 and the "Supplemental Consent of the Assignee" filed on 29 April 2005 were treated under 37 CFR 1.497(d). The decision set a time period for response as follows:
>
> If reconsideration on the merits of this matter is desired, a proper response must be filed within **TWO (2) MONTHS** from the mail date of this decision. Extensions of time are available under 37 CFR 1.136(a). Failure to timely reply will result in **ABANDONMENT** of this application. Any reconsideration request should include a cover letter entitled "Renewed Submission Under 37 CFR 1.497(d)". No additional processing fee is required.
>
> The instant correspondence "requests the status of the above-identified application" and indicates that "Applicants filed a Response to the August 16, 2005 Decision on the 'Request to Change Inventorship' filed on April 5 and April 29, 2005. To date no supplemental or amended petition decision or Office Action has been received." Review of the application file reveals that no such "Response" is present. As such, this international application stands **ABANDONED** with respect to the national stage in the United States for failure to timely reply to the Decision mailed on 16 August 2005.

### *Petition To Withdraw Holding Of Abandonment*

Petitioner seeks withdrawal of the holding of abandonment on the basis that a response to the decision mailed on 16 August 2005 was filed on 14 October 2005, and references *inter alia* a

return postcard receipt as evidence in support of this position. Inspection of the copy of the return postcard receipt accompanying the instant petition reveals that it itemizes a "Response to Decision on Request to Change Inventorship (2 pages)," a "Declaration of William P. Ramey dated October 11, 2005 (3 pages)," and a "Certificate of Mailing (1 page)." The postcard receipt is date-stamped as "Rec'd PCT/PTO 14 OCT 2005." MPEP 503 states in part that "A postcard receipt which itemizes and properly identifies the papers which are being filed serves as *prima facie* evidence of receipt in the PTO of all the items listed thereon on the date stamped thereon by the PTO." Following that practice, the copies of the "Response to Decision on Request to Change Inventorship," the "Declaration of William P. Ramey," and the "Certificate of Mailing" accompanying the instant petition is being regarded as copies of the corresponding papers originally filed on 14 October 2005. As such, petitioner is deemed to have timely replied to the Decision mailed on 16 August 2006. Accordingly, the holding of abandonment is hereby **VACATED**.

*Status Under 37 CFR 1.497(d)*

The Decision mailed on 16 August 2005 observed that

The declaration of the inventors filed on 04 March 2005 lists inventors ("Saskia, Marc, Antoinette Van De Zande" and Phyllis A. Lynch) whose names do not appear in the published international application, while the published international application names "Van De Zande, Saskia," whose name does not appear in the declaration. No Form PCT/IB/306 reflecting the recording of these changes is present in the application file. It is noted that the Request to Change Inventorship refers to one of the inventors as "Saskia Zande," which resembles both "Saskia, Marc, Antoinette Van De Zande" and "Van De Zande, Saskia." *See also* the "Written Consent of Assignee" and the "Supplemental Written Consent of Assignee," which both name "Saskia Zande." In that this is clearly more than a mere typographic error or phonetic misspelling of applicant's name, a proper petition under 37 CFR 1.182 (including the requisite $400.00 petition fee) is required to resolve the discrepancy in the name of this inventor. Such a petition should include, if appropriate, verified statements by the inventors and any other individuals having first-hand knowledge of the specific circumstances concerning how and when the error was made and discovered, and must also state (if appropriate) that the error was inadvertent and made without deceptive intent.

With regard to Phyllis A. Lynch, since the inventive entity named in the declaration differs from that named in the published international application in the sense that Phyllis A. Lynch was not named in the published international application, treatment under 37 CFR 1.497(d) is proper. A declaration filed under 37 CFR 1.497 (d) must be by the actual inventor or inventors as required under 37 CFR 1.63 or as permitted by 37 CFR 1.42, 1.43 or 1.47. The declaration must be accompanied by (1) statement from each person being added as an inventor and from each person being deleted as an inventor that the error in inventorship occurred without deceptive intention on his or her part, (2) the processing fee set forth in 37 CFR 1.17; and (3) if an assignment has been executed by any of the original named inventors, the written consent of the assignee (*See* 37 CFR 3.73(b)). *See* Section 201.03 of the Manual of Patent Examining Procedure (M.P.E.P.).

...

Regarding requirement (3), applicants have furnished a "Written Consent of Assignee, AKZO NOBEL N.V.," which states in part that it is intended to be

> signed by Hans Mestrom, who is represented to have authority to consent to the change in inventorship on behalf of AKZO NOBEL N.V. However, the "Written Consent" is signed, not by Hans Mestrom, but by "William P. Ramey, III" in the capacity of "Patent Counsel for Akzo Nobel N.V." This document is not acceptable because it is signed by a person other than the person allegedly making the statements therein. However, applicants have also furnished a "Supplemental Written Consent..." filed on 29 April 2005 and signed by Mr. Ramey, stating that he enjoys "the authority to consent to the request to correct inventorship in PCT/US03/31901 filed herewith and do consent to the change in inventorship." This document is acceptable to the extent that it evidences the assignee's consent to a change in inventorship. However, 37 CFR 3.73(b)(1) requires that assignee must establish its ownership of the application by furnishing either
>
> (i) Documentary evidence of a chain of title from the original owner to the assignee (e.g., copy of an executed assignment). The documents submitted to establish ownership may be required to be recorded pursuant to § 3.11 in the assignment records of the Office as a condition to permitting the assignee to take action in a matter pending before the Office; or
>
> (ii) A statement specifying where documentary evidence of a chain of title from the original owner to the assignee is recorded in the assignment records of the Office (e.g., reel and frame number).
>
> The instant "Request to Change Inventorship" is accompanied neither by documentary evidence of a chain of title nor by a statement specifying where such documentary evidence is recorded in the USPTO. Therefore, applicants have not satisfied the requirements of 37 CFR 3.73(b)(1) and requirement (3)(*supra*) of 37 CFR 1.497(d).

The renewed submission under 37 CFR 1.497(d) filed on 14 October 2005 indicates that an assignment in favor of Akzo Nobel N.V. was recorded on 04 May 2005, "at reel 016188 and frame 0887." As such, the requirements of 37 CFR 3.73(b)(1) and 37 CFR 1.497(d)(3) have now been satisfied.

With regard to the issues concerning the declaration as it pertains to inventor "Van De Zande, Saskia," nominated in the published international application and discussed in the Decision mailed on 16 August 2005, the "Declaration of William P. Ramey, III" filed on 14 October 2005, Atty. Ramey states that "The names 'Saskia, Marc Antoinette van de Zande' and 'van de Zande, Saskia' refer to the same inventor." Atty. Ramey characterizes the discrepancy as a "typographical error" and declares "that any such error that has occurred was inadvertent and arose without deceptive intent." Atty. Ramey further indicates that "I have been informed and believe that the Office has determined this difference in presentation of Saskia van de Zande's name to be more than a typographical error." Applicants' attention is directed to MPEP § 605.04(b), which states in part that

> Except for correction of a typographical or transliteration error in the spelling of an inventor's name, a request to have the name changed from the typewritten version to the signed version or any other corrections in the name of the inventor(s) will not be entertained, unless accompanied by a petition under 37 CFR 1.182 together with an appropriate petition fee.

*See also* MPEP § 201.03(b). Since applicants have not formally petitioned for relief under 37 CFR 1.182, it would not be appropriate to excuse the discrepancy in this inventor's name on the

basis of the present record. As such, petitioner is required to respond with a formal petition under 37 CFR 1.182 or else with an oath or declaration executed by the same inventive entity nominated by the published international application and otherwise in compliance with 37 CFR 1.497(a) and (b).

## CONCLUSION

The petition to withdraw the holding of abandonment is **GRANTED**.

The request under 37 CFR 1.497(d) is **ACCEPTED**.

The request to change the name of the inventor is **DISMISSED**, without prejudice.

If reconsideration on the merits of this matter is desired, a proper response must be filed within **TWO (2) MONTHS** from the mail date of this decision. Extensions of time under 37 CFR 1.136(a) are available. Failure to timely respond will result in **ABANDONMENT**.

Please direct any further correspondence with respect to this matter to the Assistant Commissioner for Patents, Mail Stop PCT, P.O. Box 1450, Alexandria, VA 22313-1450, and address the contents of the letter to the attention of the PCT Legal Office.

George Dombroske
PCT Legal Examiner
Office of PCT Legal Administration
Tel: (571) 272-3283
Fax: (571) 273-0459

#12

United States Patent and Trademark Office

Commissioner for Patents
United States Patent and Trademark Office
P.O. Box 1450
Alexandria, VA 22313-1450
www.uspto.gov

28 AUG 2007

INTERVET INC.
PATENT DEPARTMENT
PO BOX 318
MILLSBORO DE 19966-0318

| | |
|---|---|
| In re Application of<br>Hein et al.<br>Application No.: 10/526,706<br>PCT No.: PCT/US03/31901<br>Int. Filing Date: 09 October 2003<br>Priority Date: 09 October 2002<br>Attorney Docket No.: 2002.028 WO<br>For: Methods Of Treating And Preventing Neuro-logical Symptoms Caused By Avian Retrovirus And And Novel Associated Characteristics | DECISION |

This is in response to the correspondence filed on 09 April 2007, which is being treated as a petition under 37 CFR 1.182.

## DISCUSSION

In a decision on 14 September 2006, the petition to withdraw the holding of abandonment, filed on 28 September 2006, was granted.

In the same decision, the declaration of record was not accepted, without prejudice, because

> With regard to the issues concerning the declaration as it pertains to inventor "Van De Zande, Saskia," nominated in the published international application and discussed in the Decision mailed on 16 August 2005, the "Declaration of William P. Ramey, III" filed on 14 October 2005, Atty. Ramey states that "The names 'Saskia, Marc Antoinette van de Zande' and 'van de Zande, Saskia' refer to the same inventor." Atty. Ramey characterizes the discrepancy as a "typographical error" and declares "that any such error that has occurred was inadvertent and arose without deceptive intent." Atty. Ramey further indicates that "I have been informed and believe that the Office has determined this difference in presentation of Saskia van de Zande's name to be more than a typographical error." Applicants' attention is directed to MPEP § 605.04(b), which states in part that
>
> *Except for correction of a typographical or transliteration error in the spelling of an inventor's name, a request to have the name changed from the typewritten version to the signed version or any other corrections in the name of the inventor(s) will not be entertained, unless accompanied by a petition under 37 CFR 1.182 together with an appropriate petition fee.*
>
> See also MPEP § 201.03(b). Since applicants have not formally petitioned for relief under 37 CFR 1.182, it would not be appropriate to excuse the discrepancy in this inventor's name on the basis of the present record. As such, petitioner is required to respond with a formal petition under 37 CFR 1.182 or else with an oath or declaration executed by the same inventive entity nominated by the published international application and otherwise in compliance with 37 CFR 1.497(a) and (b).

Petitioner urges that the declaration filed on 04 March 2005 be accepted because the "Saskia, Marc, Antoinette Van de Zande" named in the declaration is allegedly the same person as the "VAN DE ZANDE, Saskia" nominated in the published international application. In support, counsel provides a copy of a "Declaration of William P. Ramey, III" dated "10/11/05" which states that Mr. Ramey inadvertently made the "typographical error" in the inventor's name.

Despite the evidence and argument advanced by petitioner, it is still not clear whether the inventor's surname is "Saskia" or whether it is "Zande" (or "Van de Zande"), as this has not been clearly stated on the record. Note that the comma appearing after "Saskia" on the declaration document implies that "Saskia" is a surname. Also, it is not clear whether Mr. Ramey is stating that the two names refer to the same inventor on the basis of first-hand knowledge, or merely on the basis of information and belief. Petitioner is advised that it is normally appropriate to furnish a statement signed by the inventor in question attesting to the fact that the name on the executed declaration and the name on the published application refer to the same inventor. Finally, it is noted that the declaration document appears to have been assembled by adding the page signed by "Saskia, Marc, Antoinette Van de Zande" (which is in one font) to the remaining pages, which are in another font. MPEP 201.03 states in part that

> An oath or declaration under 37 CFR 1.63 by each actual inventor must be presented. While each inventor need not execute the same oath or declaration, each oath or declaration executed by an inventor must contain a complete listing of all inventors so as to clearly indicate what each inventor believes to be the appropriate inventive entity. Where individual declarations are executed, they must be submitted as individual declarations rather than combined into one declaration. For example, where the inventive entity is A and B, a declaration may not be executed only by A naming only A as the inventor and a different declaration may not be executed only by B naming only B as the inventor, which two declarations are then combined into one declaration with a first page of boiler plate, a second page with A's signature, and a second page with B's signature (so that it appears that the declaration was executed with the entire inventive entity appearing in the declaration when it did not).

For all of these reasons, it still would not be appropriate to accept the declaration filed on 04 March 2005 at this time.

## CONCLUSION

The petition under 37 CFR 1.182 is **DISMISSED**, without prejudice.

If reconsideration on the merits of this matter is desired, a proper response must be filed within **TWO (2) MONTHS** from the mail date of this decision. Extensions of time under 37 CFR 1.136(a) are available. Failure to timely respond will result in **ABANDONMENT**.

Please direct any further correspondence with respect to this matter to the Assistant Commissioner for Patents, Mail Stop PCT, P.O. Box 1450, Alexandria, VA 22313-1450, and address the contents of the letter to the attention of the PCT Legal Office.

George Dombroske
PCT Legal Examiner
Office of PCT Legal Administration
Tel: (571) 272-3283
Fax: (571) 273-0459

2 5 MAR 2008

United States Patent and Trademark Office

Commissioner for Patents
United States Patent and Trademark Office
P.O. Box 1450
Alexandria, VA 22313-1450
www.uspto.gov

INTERVET INC.
PATENT DEPARTMENT
PO BOX 318
MILLSBORO DE 19966-0318

| | | |
|---|---|---|
| In re Application of | : | |
| Hein et al. | : | |
| Application No.: 10/526,706 | : | |
| PCT No.: PCT/US03/31901 | : | |
| Int. Filing Date: 09 October 2003 | : | DECISION |
| Priority Date: 09 October 2002 | : | |
| Attorney Docket No.: 2002.028 WO | : | |
| For: Methods Of Treating And Preventing Neuro- | : | |
| logical Symptoms Caused By Avian Retrovirus | : | |
| And Novel Associated Characteristics | : | |

This is in response to the "Response To Petition Decision Of January 7, 2008" filed on 23 January 2008, which is being treated as a renewed petition under 37 CFR 1.182.

## DISCUSSION

In a decision mailed on 07 January 2008, the petition under 37 CFR 1.182 filed on 28 November 2007 was dismissed, without prejudice, because

> In response, petitioner has filed a new declaration document nominating Saskia Van De Zande using the same name as shown in the published international application. Petitioner also has clearly stated that the inventor's last name is "VAN DE ZANDE." Therefore, it would be appropriate to accept the spelling as it appears on the newly submitted declaration document. The declaration document filed on 28 November 2007 has been executed only by Saskia Van De Zande. As pointed out previously, the previous declaration document of record was defective in that it appeared to have been assembled by adding the page signed by "Saskia, Marc, Antoinette Van de Zande" (which is in one font) to the remaining pages, which are in another font. Therefore, it is not clear that the other inventors had the benefit of signing a declaration listing the entire inventive entity. Petitioner should provide a declaration (for instance, another copy of the 28 November 2007 declaration document) signed by the remaining inventors. See MPEP 201.03. Since a declaration properly naming the entire inventive entity has not been executed by all of the inventors, it would not be appropriate to grant the requested relief at this time.

In response, petitioner urges (in part) that "Applicants filed two copies of the declaration on November 28, 2007. One copy was signed only by Saskia Van De Zande. The other copy was signed by the remaining inventors." Review of the electronic application file reveals that both declaration documents referenced by petitioner as filed on 28 November 2007 are now available for viewing. Upon inspection of the declaration documents filed on 28 November 2007, it would be appropriate to conclude that the objections raised in the Decision mailed on 07 January 2008 no longer are pertinent. As such, it would be appropriate to grant the petition

under 37 CFR 1.182, and to accept the declarations filed on 28 November 2007 for purposes of compliance with 37 CFR 1.497(a) and (b).

## CONCLUSION

The petition under 37 CFR 1.182 is **GRANTED**.

The $130.00 surcharge under 37 CFR 1.492(h) is being charged to Deposit Account no. 02-2334, as authorized by the instant petition.

This application is being forwarded to the Office of Patent Application Processing for further processing. Its date under 35 U.S.C. 371(c)(1), (2) and (4) is **28 November 2007**.

/George Dombroske/
George Dombroske
PCT Legal Examiner
Office of PCT Legal Administration
Tel: (571) 272-3283
Fax: (571) 273-0459

UNITED STATES PATENT AND TRADEMARK OFFICE

Commissioner for Patents
United States Patent and Trademark Office
P.O. Box 1450
Alexandria, VA 22313-1450
www.uspto.gov

**KNOBBE MARTENS OLSON & BEAR LLP**
**2040 MAIN STREET**
**FOURTEENTH FLOOR**
**IRVINE CA 92614**

MAILED

JUL 12 2010

OFFICE OF PETITIONS

ON PETITION

| | | |
|---|---|---|
| In re Patent No. 7,481,782 | : | |
| Issued: January 27, 2009 | : | |
| Application No. 10/526,713 | : | |
| Filed: September 23, 2005 | : | |
| Attorney Docket No. SPRUS55.002APC | : | |

This is a decision on the petition, filed June 14, 2010, which is being treated as a request under 37 CFR 3.81(b)[1] to change the assignee on the issued patent.

The request is **DISMISSED**.

37 CFR 3.81(a) permits the patent to issue to the assignee, provided that, at the time the issue fee is paid, the name and correct address of an assignee is provided. 37 CFR 3.81(b) permits the patent to issue in the name and correct address of an assignee if the assignment was submitted after payment of the issue fee but ***prior to issuance of a patent***. Patent and Trademark Office assignment records disclose that an assignment correcting the assignee's name from "NORTHERN SYDNEY AREA HEALTH SERVICE" to "NORTHERN SYDNEY AND CENTRAL COAST AREA HEALTH SERVICE" was recorded on January 25, 2010, after the date of issuance of this patent.

Accordingly, since the assignment was not submitted for recordation until after issuance of this patent, issuance of a certificate of correction would not be proper. *See* MPEP Section 307.

Inquiries concerning this decision should be directed to undersigned at (571) 272-7751.

Joan Olszewski

Joan Olszewski
Petitions Examiner
Office of Petitions

[1] *See* Official Gazette of June 22, 2004

1·4 NOV 2006

UNITED STATES PATENT AND TRADEMARK OFFICE

Commissioner for Patents
United States Patent and Trademark Office
P.O. Box 1450
Alexandria, VA 22313-1450
www.uspto.gov

Brian P. Kinnear
HOLLAND & HART
555 17th Street,
Suite 3200
Denver, Colorado 80201

| | | |
|---|---|---|
| In re Application of: | : | |
| BRIDLE, Trevor, Redvers, et al. | : | DECISION ON PETITION |
| U.S. Application No.: 10/526,714 | : | (37 CFR 1.181) |
| PCT No.: PCT/AU2003/001099 | : | |
| International Filing Date: 26 August 2003 | : | |
| Priority Date: 04 September 2002 | : | |
| Attorney's Docket No.: 830001.000 | : | |
| For: CONVERSION OF SLUDGES AND | : | |
| CARBONACEOUS MATERIALS | : | |

In a decision mailed by this Office on 17 October 2006, the present application was held to be abandoned based on applicants' failure to file a grantable petition confirming that the declaration executed by the previously non-signing inventor Stefan SKRYPSKI-MANTELE was timely filed.

On 06 November 2006, applicants filed the "Petition Under 37 CFR 1.181" considered herein. The petition includes a statement confirming that the accompanying declaration and transmittal letter were originally filed on 18 August 2006. A copy of a return postcard that itemizes the declaration and cover letter and bears a USPTO receipt stamp dated 18 August 2006 also accompanies the petition. Based on applicants' statements and the stamped return postcard, it is concluded that the declaration executed by the previously non-signing inventor Stefan SKRYPSKI-MANTELE and the accompanying transmittal letter (with fee authorization) were originally filed on 18 August 2006.

The petition under 37 CFR 1.181 is **GRANTED**. The materials accompanying the present petition (i.e., the executed declaration and the transmittal letter containing the fee authorization) will be treated as having been filed on 18 August 2006.

Based on the fee authorization included in the 18 August 2006 submission, Deposit Account No. 50-3207 will be charged the fee for the five-month extension of time. Pursuant to this extension, the 18 August 2006 submission is considered a timely response to the decision mailed herein on 19 January 2006.

The holding of abandonment, based as it was on applicants' purported failure to file a timely response to the decision mailed 19 January 2006, is hereby **WITHDRAWN**.

This application is being referred to the national Stage Processing Branch of the Office of PCT Operations for further processing in accordance with this decision. The date under 35 U.S.C. 371(c)(1), (c)(2), and (c)(4) is 18 August 2006.

Richard M. Ross
Attorney Advisor
Office of PCT Legal Administration
Telephone: (571) 272-3296
Facsimile: (571) 273-0459

#5

UNITED STATES PATENT AND TRADEMARK OFFICE

Commissioner for Patents
United States Patent and Trademark Office
P.O. Box 1450
Alexandria, VA 22313-1450
www.uspto.gov

19 JAN 2006

Brian P. Kinnear
HOLLAND & HART
555 17th Street,
Suite 3200
Denver, Colorado 80201

| | | |
|---|---|---|
| In re Application of: | : | |
| BRIDLE, Trevor, Redvers, et al. | : | DECISION ON PETITION UNDER |
| U.S. Application No.: 10/526,714 | : | 37 CFR 1.47(a) |
| PCT No.: PCT/AU2003/001099 | : | |
| International Filing Date: 26 August 2003 | : | |
| Priority Date: 04 September 2002 | : | |
| Attorney's Docket No.: 830001.000 | : | |
| For: CONVERSION OF SLUDGES AND | : | |
| CARBONACEOUS MATERIALS | : | |

This decision is issued in response to applicants' "Petition Under 37 CFR 1.47(a)" filed 19 September 2005. Applicant has submitted the required petition fee.

## BACKGROUND

On 26 August 2003, applicants filed international application PCT/AU2003/001099 which claimed a priority date of 04 September 2002 and which designated the United States. The deadline for submission of the basic national fee was thirty months from the priority date, i.e., 04 March 2005.

On 03 March 2005, applicants filed a Transmittal Letter for entry into the national stage in the United States accompanied by, among other materials, payment of the basic national fee.

On 22 July 2005, the United States Designated/Elected Office (DO/EO/US) mailed a Notification Of Missing Requirement (Form PCT/DO/EO/905) indicating that an executed declaration in compliance with 37 CFR 1.497 and the surcharge for filing the declaration later than thirty months after the priority date was required.

On 19 September 2005, applicants filed a response to the Notification Of Missing Requirements which included the required surcharge, a declaration executed by one of the two inventors, and the petition under 37 CFR 1.47(a) considered herein. The petition seeks acceptance of the application without the signature of inventor Stefan SKRYPSKI-MANTELE, whom applicants argue has refused to execute the application.

## DISCUSSION

A grantable petition under 37 CFR 1.47(a) must be accompanied by: (1) the fee under 37 CFR 1.17; (2) a statement of the last known address of the nonsigning inventor; (3) an oath or declaration executed by the other inventors on behalf of themselves and the nonsigning inventor; and (4) factual proof that the inventor refuses to execute the application or cannot be reached after diligent effort.

Here, applicants have filed the required petition fee, and the petition expressly states the last known address of the nonsigning inventor. Items (1) and (2) are therefore satisfied.

Regarding item (3), section 409.03(a) of the Manual of Patent Examining Practice (MPEP) states that:

> An oath or declaration signed by all the available joint inventors with the signature block of the nonsigning inventor(s) left blank may be treated as having been signed by all the joint inventors on behalf of the nonsigning inventor(s), unless otherwise indicated.

Applicants have filed a declaration executed by inventor Trevor Redvers BRIDLE and containing an unsigned signature block for the nonsigning inventor Stefan SKRYPSKI-MANTELE. This declaration satisfies item (3).

Regarding item (4), the petition states that the assignee has forwarded a copy of the application materials to the nonsigning inventor at his last known address, and that no response has been received. This statement is insufficient to support the conclusion that the inventor has refused to sign the application or can not be located after diligent effort. Pursuant to MPEP section 409.03(d), before it can be concluded that an inventor has refused to join in the application, "[a] copy of the application papers should be sent to the last known address of the nonsigning inventor, or, if the nonsigning inventor is represented by counsel, to the address of the nonsigning inventor's attorney." The MPEP also states the following:

> Where a refusal of the inventor to sign the application papers is alleged, the circumstances of the presentation of the application papers and of the refusal must be specified in a statement of facts by the person who presented the inventor with the application papers and/or to whom the refusal was made. Statements by a party not present when an oral refusal is made will not be accepted.

Here, applicant has not provided a statement of facts form the person who provided the application papers to the inventor, nor have details of this presentation and or any documentary evidence of delivery or receipt been provided. It is noted that, generally, the failure of an inventor to respond to a single mailing, receipt of which has not been confirmed, is not considered a constructive refusal to sign the application.

Before item (4) can be considered satisfied, applicants must provide the required firsthand evidence (with documentary support) demonstrating that the complete application papers and a request for signature have been have been delivered to the nonsigning inventor, and that he has refused to execute the application papers.

## CONCLUSION

Applicants' petition under 37 CFR 1.47(a) is **DISMISSED** without prejudice.

If reconsideration on the merits of the petition is desired, a proper response must be filed within **TWO (2) MONTHS** of the mail date of the present decision. Any request for reconsideration should include a cover letter entitled "Renewed Petition Under 37 CFR 1.47(a)" and must include the materials required to satisfy item (4) of a grantable petition, as discussed above. No additional petition fee is required.

Failure to file a proper response will result in abandonment of the application. Extensions of time are available under 37 CFR 1.136(a)

Please direct further correspondence with respect to this matter to Mail Stop PCT, Commissioner for Patents, Office of PCT Legal Administration, P.O. Box 1450, Alexandria, Virginia 22313-1450, with the contents of the letter marked to the attention of the Office of PCT Legal Administration.

Richard M. Ross
PCT Petitions Attorney
PCT Legal Office
Telephone: (571) 272-3296
Facsimile: (571) 273-0459

A7

UNITED STATES PATENT AND TRADEMARK OFFICE

Commissioner for Patents
United States Patent and Trademark Office
P.O. Box 1450
Alexandria, VA 22313-1450
www.uspto.gov

17 OCT 2006

Brian P. Kinnear
HOLLAND & HART
555 17th Street,
Suite 3200
Denver, Colorado 80201

| | | |
|---|---|---|
| In re Application of: | : | |
| BRIDLE, Trevor, Redvers, et al. | : | DECISION |
| U.S. Application No.: 10/526,714 | : | |
| PCT No.: PCT/AU2003/001099 | : | |
| International Filing Date: 26 August 2003 | : | |
| Priority Date: 04 September 2002 | : | |
| Attorney's Docket No.: 830001.000 | : | |
| For: CONVERSION OF SLUDGES AND | : | |
| CARBONACEOUS MATERIALS | : | |

In a decision mailed by this Office on 19 January 2006, applicants' petition under 37 CFR 1.47(a) for acceptance of the application without the signature of co-applicant Stefan SKRYPSKI-MANTELE was dismissed without prejudice for failure to satisfy the requirements of a grantable petition.

On 23 August 2006, this Office received an unsigned facsimile communication from above-named counsel, accompanied by a copy of, among other materials, a declaration executed by the previously non-signing inventor Stefan SKRYPSKI-MANTELE.[1] The 23 August 2006 submission implies that the accompanying declaration was originally filed in the USPTO on 18 August 2006, but a grantable petition to confirm the 18 August 2006 filing has not been submitted, and the application file does not contain any copy of this declaration other than that submitted by facsimile on 23 August 2006.

The decision mailed on 19 January 2006 provided a two-month response period. Pursuant to 37 CFR 1.136(a), this period was extendable for up to five additional months, that is, until 21 August 2006 (19 August 2006 was a Friday). As discussed above, the only response to the previous decision contained in the application file is the 23 August 2006 facsimile.

Based on the above, the present application is **ABANDONED** for failure to file a timely response to the decision mailed 19 January 2006.

If applicants seek withdrawal of the holding of abandonment, a grantable petition confirming the 18 August 2006 filing of the declaration executed by previously non-signing

[1] It is noted that an agent from a different law firm than that listed above executed the transmittal letter accompanying the declaration, and the correspondence address indicated in the declaration is for such law firm, not the above-listed correspondence address of record.

inventor Stefan SKRYPSKI-MANTELE must be promptly submitted, accompanied by payment of the five-month extension fee required to make the 18 August 2006 submission a timely response to the 19 January 2006 decision.

In the alternative, if a grantable petition to confirm the 18 August 2006 filing of the executed declaration cannot be submitted (i.e., if such declaration was not timely filed), then applicants might consider filing a petition for revival of the application under 37 CFR 1.137(b).

Please direct further correspondence with respect to this matter to Mail Stop PCT, Commissioner for Patents, P.O. Box 1450, Alexandria, Virginia 22313-1450, with the contents of the letter marked to the attention of the Office of PCT Legal Administration.

Richard M. Ross
Attorney Advisor
Office of PCT Legal Administration
Telephone: (571) 272-3296
Facsimile: (571) 273-0459

03 JUN 2005

UNITED STATES PATENT AND TRADEMARK OFFICE

COMMISSIONER FOR PATENTS
UNITED STATES PATENT AND TRADEMARK OFFICE
P.O. BOX 1450
ALEXANDRIA, VA 22313-1450
www.uspto.gov

CALFEE HALTER & GRISWOLD, LLP
800 SUPERIOR AVENUE
SUITE 1400
CLEVELAND, OH 44114

| | | |
|---|---|---|
| In re Application of TIMKO | : | |
| U.S. Application No.: 10/526,738 | : | |
| PCT Application No.: PCT/US03/01351 | : | |
| Int. Filing Date: 17 January 2003 | : | DECISION |
| Priority Date Claimed: 18 January 2002 | : | |
| Attorney Docket No.: 22188/06985 | : | |
| For: BALL VALVE WITH SINGLE PIECE PACKING | : | |

This is in response to applicant's "Petition for Revival of an International Application for Patent Designating the U.S. Abandoned Unintentionally Under 37 CFR 1.137(b)" filed 04 March 2005.

## BACKGROUND

On 17 January 2003, applicant filed international application PCT/US03/01351, which claimed priority of an earlier United States application filed 18 January 2002. The thirty-month period for paying the basic national fee in the United States expired on 18 July 2004.

International application PCT/US03/01351 became abandoned as to the United States for failure to timely pay the basic national fee.

On 04 March 2005, applicant filed the present petition under 37 CFR 1.137(b).

## DISCUSSION

Under 37 CFR 1.137(b), a petition requesting that an application be revived on the grounds of unintentional abandonment must be accompanied by: (1) the required reply unless previously filed, (2) the petition fee as set forth in 37 CFR 1.17(m), (3) a statement that the entire delay in filing the required reply from the due date for the reply until the filing of a grantable petition was unintentional, and (4) a terminal disclaimer if the application was filed before 08 June 1995.

With regard to item (1), applicant has provided the required basic national fee under 35 U.S.C. 371.

With regard to item (2), applicant has provided the required petition fee.

With regard to item (3), applicant has provided the required statement.

With regard to item (4), because the international application was filed after 08 June 1995, no terminal disclaimer is required.

## CONCLUSION

For the reasons above, the petition under 37 CFR 1.137(b) is GRANTED.

This application is being forwarded to the United States Designated/Elected Office (DO/EO/US) for further processing in accordance with this decision, including preparation and mailing of a Notification of Missing Requirements under 35 U.S.C. 371 (Form PCT/DO/EO/905) indicating that an oath or declaration in compliance with 37 CFR 1.497 must be filed.

Bryan Tung
PCT Legal Examiner
PCT Legal Office

Telephone: 571-272-3303
Facsimile: 571-273-0459

UNITED STATES PATENT AND TRADEMARK OFFICE

Commissioner for Patents
United States Patent and Trademark Office
P.O. Box 1450
Alexandria, VA 22313-1450
www.uspto.gov

FOLEY AND LARDNER LLP
SUITE 500
3000 K STREET NW
WASHINGTON, DC 20007

MAILED

MAR 2 6 2010

OFFICE OF PETITIONS

In re Application of Maki et al. :
Application No. 10/526,744 :
Int'l. Filing Date: September 5, 2003 :
Attorney Docket No. 053466-0395 :

On Application For
Patent Term Adjustment

This is a decision on the "Request for Reconsideration of Patent Term Adjustment Under 37 C.F.R. §1.705" filed December 16, 2009. Applicants submit the correct patent term adjustment to be indicated on the patent is six hundred seventy-nine (679) days, not three hundred sixteen (316) days as calculated by the Office as of the mailing of the initial determination of patent term adjustment. Applicants request this correction solely on the basis that the Office will take in excess of three years to issue this patent.

As the instant application for patent term adjustment requests reconsideration of the patent term adjustment as it relates to the Office's failure to issue the patent within 3 years of the filing date, the application for patent term adjustment under 37 CFR 1.705(b) is **DISMISSED as PREMATURE**.

Knowledge of the actual date the patent issues is required to calculate the amount, if any, of additional patent term patentee is entitled to for Office failure to issue the patent within 3 years. See 37 CFR 1.702(b). (This is true even where a request for continued examination (RCE) was filed). The computer will not undertake the § 1.702(b) calculation until the actual date of issuance of the patent has been determined. Likewise, the computer will not calculate any further Office delay under § 1.702(a)(4) or applicant delay under § 1.704(c)(10) until the actual date of issuance of the patent has been determined. As such, the Office can not make a determination on the correctness of the patent term adjustment until the patent has issued.

Requesting reconsideration of the patent term adjustment to be indicated on the patent under 37 CFR 1.705(b) based on the initial determination of patent term adjustment and a projected issuance date of the patent (or even the filing date of the request for continued examination) is premature. Accordingly, it is appropriate to dismiss as premature such a request.

Rather than file an application for patent term adjustment under 37 CFR 1.705(b) contesting the 37 CFR 1.702(b) calculation at the time of the mailing of the notice of allowance, an applicant may wait until the time of the issuance of the patent and file a request for reconsideration of the patent term adjustment pursuant to 37 CFR 1.705(d). As the USPTO does not calculate the

amount of time earned pursuant to 37 CFR 1.702(b) until the time of the issuance of the patent, the Office will consider any request for reconsideration of the patent term adjustment due to an error in the calculation of 37 CFR 1.702(b) to be timely if the request for reconsideration is filed within two months of the issuance of the patent. However, as to all other bases for contesting the initial determination of patent term adjustment received with the notice of allowance, applicant must timely file an application for patent term adjustment prior to the payment of the issue fee.[1]

Applicants have submitted the $200.00 fee set forth in 37 CFR 1.18(e) for consideration of the application for patent term adjustment under 37 CFR 1.705(b). However, applicants state, "[B]ecause this PTA error is due to a Patent Office error in interpreting and applying the PTA statute, a refund of the fee is respectfully requested." An application for patent term adjustment under 37 CFR 1.705 must be accompanied by payment of a $200 fee pursuant to 37 CFR 1.18(e). The Office does not refund the fee even if the petition is necessitated by Office error.[2] Therefore, the Office will not refund the fee.

Any request for reconsideration of the patent term adjustment indicated on the patent must be timely filed within 2 months after issuance pursuant to 37 CFR 1.705(d) and must include payment of the required fee under 37 CFR 1.18(e).

The Office of Data Management has been advised of this decision. This application is being referred to the Office of Data Management for issuance of the patent.

Telephone inquiries regarding this communication should be directed to Petitions Attorney Steven Brantley at (571) 272-3203.

Anthony Knight
Supervisor
Office of Petitions

---

[1] For example, if applicant disputes both the calculation of patent term adjustment under 37 CFR 1.702(a)(1) for Office failure to mail a first Office action or notice of allowance not later than fourteen months after the date on which the application was filed and under 37 CFR 1.702(b) for Office failure to issue a patent within three years of the actual filing date of the application, then applicant must still timely file an application for patent term adjustment prior to the payment of the issue fee to contest the calculation of Office delay in issuing a first Office action or notice of allowance. See 37 CFR 1.705(b) and 35 U.S.C. 154(b)(3)(B). A dispute as to the calculation of the §1.702(a)(1) period raised on request for reconsideration of patent term adjustment under 37 CFR 1.705(d) will be dismissed as untimely filed.

[2] *See* Response to Comment 1, Changes to Implement Patent Term Adjustment Under Twenty-Year Patent Term; Final Rule, 65 Fed. Reg. 56,366, 53,374 (September 18, 2000), 1239 Off. Gaz. Pat. Office 14 (October 3, 2000) ("refunding the fee under § 1.18(e) when the application for patent term adjustment is correct would: (1) require the Office to raise the fee set forth in § 1.18(e) (to enable the Office to recover the same aggregate amount); and (2) add further complication to a review process that must take place in a limited period of time.")

UNITED STATES PATENT AND TRADEMARK OFFICE

Commissioner for Patents
United States Patent and Trademark Office
P.O. Box 1450
Alexandria, VA 22313-1450
www.uspto.gov

FOLEY AND LARDNER LLP
SUITE 500
3000 K STREET NW
WASHINGTON, DC 20007

MAILED

JUL 20 2010

OFFICE OF PETITIONS

| | | |
|---|---|---|
| In re Patent of Maki et al. | : | |
| Patent No. 7,713,532 | : | |
| Issue Date: May 11, 2010 | : | DECISION ON REQUEST |
| Application No. 10/526,744 | : | FOR RECONSIDERATION OF |
| 371(c) Date: March 25, 2005 | : | PATENT TERM ADJUSTMENT |
| Attorney Docket No. 053466-0395 | : | |

This is in response to the "Request for Reconsideration of Patent Term Adjustment for Patent Under 37 C.F.R. §1.705(d)." Patentees request the determination of patent term adjustment indicated on the patent be corrected from six hundred forty-eight (648) days to seven hundred three (703) days.

The request for reconsideration of the patent term adjustment indicated on the patent is **dismissed**.

As recognized in the request, the 55-discrepancy between the Office's calculation of patent term adjustment and Patentees' calculation of patent term adjustment is the result of a disagreement with respect to the number of days of delay under 35 U.S.C. § 154(b)(1)(B) ("B Delay").

Patentees contend the period of B Delay is 369 days. The Office disagrees with the 369-day calculation for two reasons.

This application is the national stage of International Application No. PCT/JP2003/011389. The international priority date is September 6, 2002, and the date 30 months after the priority date was Sunday, March 6, 2005. Patentees used March 6, 2005, as the commencement date when calculating B Delay. However, since the 30-month date fell on a Sunday, the date of commencement is March 7, 2005.

The Office excluded the 54-day time period beginning on January 16, 2009, the date a Notice of Appeal was filed, and ending on March 10, 2009, the day before a Request for Continued Examination ("RCE") was filed, from the period of B Delay. Patentees' assert 35 U.S.C. § 154(b)(1)(B)(i) only provides for the exclusion of time consumed by continued examination from the period of B Delay. However, the Office entered the reduction pursuant to 35 U.S.C.

§ 154(b)(1)(B)(**ii**), which does provide for the exclusion of any time period consumed by appellate review from period of B Delay. Therefore, the exclusion of 54 days of appellate review from the period of B Delay was proper.

In view of the previous discussion, the patent term adjustment indicated on the patent was correct.

Submission of the $200.00 fee set forth in 37 CFR 1.18(e) is acknowledged. No additional fee is required.

Telephone inquiries specific to this decision should be directed to Senior Petitions Attorney Steven Brantley at (571) 272-3203.

Charles Steven Brantley
Senior Petitions Attorney
Office of Petitions

UNITED STATES PATENT AND TRADEMARK OFFICE

UNITED STATES DEPARTMENT OF COMMERCE
United States Patent and Trademark Office
Address: COMMISSIONER FOR PATENTS
P.O. Box 1450
Alexandria, Virginia 22313-1450
www.uspto.gov

SAP / FINNEGAN, HENDERSON LLP
901 NEW YORK AVENUE, NW
WASHINGTON, DC 20001-4413

Mail Date: 04/26/2010

| | | |
|---|---|---|
| **Applicant** | : Thorsten Pferdekäemper | : DECISION ON REQUEST FOR |
| **Patent Number** | : 7653667 | : RECALCULATION of PATENT |
| **Issue Date** | : 01/26/2010 | : TERM ADJUSTMENT IN VIEW |
| **Appliction No** | : 10/526,748 | : OF WYETH AND NOTICE OF INTENT TO |
| **Filed** | : 11/08/2005 | : ISSUE CERTIFICATE OF CORRECTION |
| | | : |

The Request for Recalculation is **GRANTED** to the extent indicated.

The patent term adjustment has been determined to be **12** days. The USPTO will *sua sponte* issue a certificate of correction reflecting the amount of PTA days determined by the recalculation.

Prior to the issuance of the certificate of correction, the USPTO will afford patentee an opportunity to be heard and request reconsideration. Accordingly, patentee has **one month or thirty (30) days**, whichever is longer, to file a request for reconsideration of this patent term adjustment calculation. See 35 U.S.C. 154(b)(3)(B)(ii) and 37 CFR 1.322(a)(4). No extensions of time will be granted under 37 CFR 1.136.

Patentee should use document code PET.OP if electronically filing a request for reconsideration of this patent term adjustment calculation. The patentee must also include the information required by 37 CFR 1.705(b)(2) and the fee required by 37 CFR 1.18(e). If patentee does not file a timely request for reconsideration of this patent term adjustment calculation including the information required by 37 CFR 1.705(b)(2) and the fee required by 37 CFR 1.18(e), the USPTO will issue a certificate of correction reflecting the PTA determination noted above.

Patentee should be aware that in order to preserve the right to review in the United States District Court for the District of Columbia of the USPTO patent term adjustment determination, patentee must ensure that he or she also take the steps required under 35 U.S.C. 154(b)(4)(A) in a timely manner. Nothing in the request for recalculation should be construed as providing an alternative time frame for commencing a civil action under 35 U.S.C. 154(b)(4)(A).

Any questions concerning this decision should be directed to the Office of Patent Legal Administration at 571-272-7702.

UNITED STATES PATENT AND TRADEMARK OFFICE

Commissioner for Patents
United States Patent and Trademark Office
P.O. Box 1450
Alexandria, VA 22313-1450
www.uspto.gov

MAILED

MAR 0 1 2010

OFFICE OF PETITIONS

SAP / FINNEGAN, HENDERSON LLP
901 NEW YORK AVENUE, NW
WASHINGTON DC 20001-4413

In re Application of
Martin Fischer et al.
Application No. 10/526,749
Filed: November 14, 2005
Attorney Docket No. 07781.0219-00

LETTER REGARDING
PATENT TERM ADJUSTMENT

This letter is in response to the "NOTICE OF POSSIBLE PTO ERROR IN THE DETERMINATION OF PATENT TERM ADJUSTMENT AND REQUEST FOR REVIEW OF CALCULATION", filed October 26, 2009. Pursuant to their duty of good faith and candor to the Office, applicants note that the patent term adjustment pursuant to 35 U.S.C. 154(b) of 91 days indicated on the Determination of Patent Term Adjustment, PTOL-85, should be 62 days instead.

The request for correction of the initial determination of patent term adjustment (PTA) is **GRANTED.** The PTA at the time of the mailing of the notice of allowance is 62 days.

The Office has updated the PALM screen to reflect that the correct Patent Term Adjustment determination at the time of the mailing of the Notice of Allowance is sixty-two (62)days. A copy of the updated PALM screen, showing the corrected determination, is enclosed.

On October 14, 2009, the Office mailed the Determination of Patent Term Adjustment under 35 U.S.C. 154(b) in the above-identified application. The Notice stated that the patent term adjustment to date is 91 days. Applicants direct the office to the Information Disclosure Statement (IDS) and the Terminal Disclaimer filed October 7, 2009 and argue therefore that the time deducted for applicant delay pursuant to 37 CFR 1.704( c)(8) should have been a 62 day deduction for applicant delay.

A review of the record reveals that the initial determination of patent term adjustment of 91 days is incorrect.

After the filing on July 23, 2009 of a Request for Continued Examination, in response to a Final Office Action mailed May 6, 2009, an Information Disclosure Statement (IDS) and a Terminal Disclaimer were both filed October 7, 2009. The terminal disclaimer was incorrectly listed as having been filed on September 8, 2009. Thus, instead of a 47 day reduction for applicant delay pursuant to 37 C.F.R. §1.704(b), 76 days should have been accorded.

37 CFR 1.704(c)(8) provides that:

> the submission of a supplemental reply or other paper, other than a supplemental reply or other paper expressly requested by the examiner,

> after a reply has been filed, in which case the period of adjustment set forth in § 1.703 shall be reduced by the number of days, if any, beginning on the day after the date the initial reply was filed and ending on the date that the supplemental reply or other such paper was filed;

In this instance, the filing of the Information Disclosure Statement and the Terminal Disclaimer on October 7, 2009 is considered a failure to engage under 1.704(c)(8) as neither was expressly requested by the examiner nor did the IDS include a 1.704(d) statement.

The period of reduction pursuant to 37 CFR 1.704(c)(8) is 76 days, counting the number of days in the period beginning on the day after the initial reply was filed, July 23, 2009 and ending on the date of filing of the last supplemental paper, the IDS and Terminal Disclaimer filed October 7, 2009. Accordingly, a period of reduction of 76 days is being entered.

In view thereof, the determination of Patent Term Adjustment at the time of the mailing of the notice of allowance is SIXTY-TWO (62) days (190 days of Office delay reduced by 128 days of applicant delay).

As this letter was submitted as an advisement to the Office of an error in Applicants' favor, the Office will not assess the $200.00 fee under 37 CFR 1.18(e). The Office thanks applicants for their good faith and candor in bringing this to the attention of the Office.

The Office of Data Management has been advised of this decision. The application is, thereby, forwarded to the Office of Data Management for issuance of the application. The patent term adjustment indicated on the patent (as shown on the Issue Notification mailed about three weeks prior to patent issuance) will include any additional adjustment accrued both for Office delay in issuing the patent more than four months after payment of the issue fee and satisfaction of all outstanding requirements, and for the Office taking in excess of three years to issue the patent (to the extent that the three-year period does not overlap with periods already accorded).

Telephone inquiries specific to this decision should be directed to Senior Petitions Attorney Patricia Faison-Ball at (571) 272-3212.
/Kery A. Fries/

Kery A. Fries
Senior Legal Advisor
Office of Patent Legal Administration
Office of Deputy Commissioner
for Examination Policy

Enclosure: Copy of Revised PALM Screen

PALM INTRANET

Day : Monday
Date: 3/1/2010
Time: 06:16:47

## PTA Calculations for Application: 10/526749

| | | | |
|---|---|---|---|
| Application Filing Date: | 11/14/2005 | PTO Delay (PTO): | 190 |
| Issue Date of Patent: | | Three Years: | 0 |
| Pre-Issue Petitions: | 0 | Applicant Delay (APPL): | 99 |
| Post-Issue Petitions: | 0 | Total PTA (days): | 62 |
| PTO Delay Adjustment: | -29 | | |

### File Contents History

| Number | Date | Contents Description | PTO | APPL | START |
|---|---|---|---|---|---|
| 110 | 02/28/2010 | ADJUSTMENT OF PTA CALCULATION BY PTO | | 29 | |
| 99 | 10/14/2009 | MAIL NOTICE OF ALLOWANCE | | | |
| 98 | 10/13/2009 | ISSUE REVISION COMPLETED | | | |
| 97 | 10/13/2009 | DOCUMENT VERIFICATION | | | |
| 96 | 10/13/2009 | NOTICE OF ALLOWANCE DATA VERIFICATION COMPLETED | | | |
| 95 | 10/13/2009 | EXAMINER'S AMENDMENT COMMUNICATION | | | |
| 94 | 10/13/2009 | NOTICE OF ALLOWABILITY | | | |
| 93 | 10/06/2009 | EXAMINER INTERVIEW SUMMARY RECORD (PTOL - 413) | | | |
| 92 | 10/09/2009 | PARALEGAL TD ACCEPTED | | | |
| 91 | 09/08/2009 | TERMINAL DISCLAIMER FILED | | 47 | 85 |
| 90 | 10/07/2009 | INFORMATION DISCLOSURE STATEMENT CONSIDERED | | | |
| 89 | 10/07/2009 | INFORMATION DISCLOSURE STATEMENT (IDS) FILED | | | |
| 88 | 07/27/2009 | DATE FORWARDED TO EXAMINER | | | |
| 87 | 07/23/2009 | AMENDMENT SUBMITTED/ENTERED WITH FILING OF CPA/RCE | | | |
| 86 | 07/27/2009 | DATE FORWARDED TO EXAMINER | | | |
| 85 | 07/23/2009 | REQUEST FOR CONTINUED EXAMINATION (RCE) | | | |
| 84 | 07/27/2009 | DISPOSAL FOR A RCE / CPA / R129 | | | |
| 83 | 07/23/2009 | WORKFLOW - REQUEST FOR RCE - BEGIN | | | |
| 82 | 07/09/2009 | MAIL ADVISORY ACTION (PTOL - 303) | | | |
| 81 | 07/09/2009 | ADVISORY ACTION (PTOL-303) | | | |
| 80 | 07/07/2009 | DATE FORWARDED TO EXAMINER | | | |
| 79 | 07/06/2009 | AMENDMENT AFTER FINAL REJECTION | | | |

| | | | | | |
|---|---|---|---|---|---|
| 78 | 05/06/2009 | MAIL FINAL REJECTION (PTOL - 326) | | | |
| 77 | 05/05/2009 | FINAL REJECTION | | | |
| 76 | 12/24/2008 | INFORMATION DISCLOSURE STATEMENT CONSIDERED | | | |
| 75 | 03/11/2009 | INFORMATION DISCLOSURE STATEMENT CONSIDERED | | | |
| 74 | 03/11/2009 | REFERENCE CAPTURE ON IDS | | | |
| 73 | 03/11/2009 | INFORMATION DISCLOSURE STATEMENT (IDS) FILED | | 0 | 70 |
| 72 | 03/11/2009 | TERMINAL DISCLAIMER FILED | | | |
| 71 | 03/13/2009 | DATE FORWARDED TO EXAMINER | | | |
| 70 | 03/11/2009 | RESPONSE AFTER NON-FINAL ACTION | | | |
| 69 | 03/11/2009 | INFORMATION DISCLOSURE STATEMENT (IDS) FILED | | | |
| 68 | 12/24/2008 | REFERENCE CAPTURE ON IDS | | | |
| 67 | 12/24/2008 | INFORMATION DISCLOSURE STATEMENT (IDS) FILED | | | |
| 66 | 12/24/2008 | INFORMATION DISCLOSURE STATEMENT (IDS) FILED | | | |
| 65 | 12/23/2008 | MAIL NON-FINAL REJECTION | | | |
| 64 | 12/22/2008 | NON-FINAL REJECTION | | | |
| 63 | 10/02/2008 | INFORMATION DISCLOSURE STATEMENT CONSIDERED | | | |
| 62 | 10/02/2008 | REFERENCE CAPTURE ON IDS | | | |
| 61 | 10/02/2008 | INFORMATION DISCLOSURE STATEMENT (IDS) FILED | | 0 | 57 |
| 60 | 10/10/2008 | DATE FORWARDED TO EXAMINER | | | |
| 59 | 10/02/2008 | RCE- AF PROCESSED | | | |
| 58 | 10/10/2008 | DATE FORWARDED TO EXAMINER | | | |
| 57 | 10/02/2008 | REQUEST FOR CONTINUED EXAMINATION (RCE) | | 9 | 46 |
| 56 | 10/10/2008 | DISPOSAL FOR A RCE / CPA / R129 | | | |
| 55 | 10/02/2008 | REQUEST FOR EXTENSION OF TIME - GRANTED | | | |
| 54 | 10/02/2008 | INFORMATION DISCLOSURE STATEMENT (IDS) FILED | | | |
| 53 | 10/02/2008 | WORKFLOW - REQUEST FOR RCE - BEGIN | | | |
| 52 | 09/11/2008 | MAIL ADVISORY ACTION (PTOL - 303) | | | |
| 51 | 09/10/2008 | ADVISORY ACTION (PTOL-303) | | | |
| 50 | 09/03/2008 | DATE FORWARDED TO EXAMINER | | | |

| | | | | | |
|---|---|---|---|---|---|
| 49 | 08/25/2008 | AMENDMENT AFTER FINAL REJECTION | | | |
| 48 | 03/25/2008 | REFERENCE CAPTURE ON IDS | | | |
| 47 | 03/25/2008 | INFORMATION DISCLOSURE STATEMENT (IDS) FILED | | | |
| 46 | 06/23/2008 | MAIL FINAL REJECTION (PTOL - 326) | | | |
| 45 | 06/20/2008 | FINAL REJECTION | | | |
| 44 | 05/14/2008 | INFORMATION DISCLOSURE STATEMENT CONSIDERED | | | |
| 43 | 03/25/2008 | INFORMATION DISCLOSURE STATEMENT CONSIDERED | | | |
| 42 | 05/14/2008 | REFERENCE CAPTURE ON IDS | | | |
| 41 | 05/14/2008 | INFORMATION DISCLOSURE STATEMENT (IDS) FILED | | 43 | 37 |
| 40 | 05/14/2008 | INFORMATION DISCLOSURE STATEMENT (IDS) FILED | | | |
| 39 | 05/08/2008 | CORRESPONDENCE ADDRESS CHANGE | | | |
| 38 | 05/03/2008 | DATE FORWARDED TO EXAMINER | | | |
| 37 | 04/01/2008 | RESPONSE AFTER NON-FINAL ACTION | | | |
| 36 | 03/25/2008 | INFORMATION DISCLOSURE STATEMENT (IDS) FILED | | | |
| 35 | 01/07/2008 | MAIL NON-FINAL REJECTION | | | |
| 34 | 01/04/2008 | NON-FINAL REJECTION | | | |
| 33 | 12/13/2007 | CASE DOCKETED TO EXAMINER IN GAU | | | |
| 32 | 10/30/2007 | PARALEGAL TD ACCEPTED | | | |
| 31 | 10/23/2007 | TERMINAL DISCLAIMER FILED | | 0 | 29 |
| 30 | 10/29/2007 | DATE FORWARDED TO EXAMINER | | | |
| 29 | 10/23/2007 | RESPONSE AFTER NON-FINAL ACTION | | | |
| 28 | 07/24/2007 | CASE DOCKETED TO EXAMINER IN GAU | | | |
| 27 | 07/23/2007 | MAIL NON-FINAL REJECTION | 190 | | 7 |
| 26 | 07/20/2007 | NON-FINAL REJECTION | | | |
| 25 | 06/19/2007 | INFORMATION DISCLOSURE STATEMENT CONSIDERED | | | |
| 24 | 06/19/2007 | INFORMATION DISCLOSURE STATEMENT (IDS) FILED | | | |
| 23 | 07/13/2006 | INFORMATION DISCLOSURE STATEMENT CONSIDERED | | | |
| 22 | 07/13/2006 | INFORMATION DISCLOSURE STATEMENT (IDS) FILED | | | |
| 19 | 04/09/2007 | CASE DOCKETED TO EXAMINER IN GAU | | | |
| 18 | 11/28/2006 | IFW TSS PROCESSING BY TECH CENTER | | | |

| | | | | | |
|---|---|---|---|---|---|
| | | COMPLETE | | | |
| 17 | 11/28/2006 | CASE DOCKETED TO EXAMINER IN GAU | | | |
| 16 | 11/14/2005 | REFERENCE CAPTURE ON IDS | | | |
| 13 | 04/10/2006 | CLEARED BY OIPE CSR | | | |
| 12 | 04/10/2006 | CLEARED BY OIPE CSR | | | |
| 11 | 04/10/2006 | CLEARED BY OIPE CSR | | | |
| 10 | 04/10/2006 | CLEARED BY OIPE CSR | | | |
| 9 | 04/10/2006 | CLEARED BY OIPE CSR | | | |
| 8 | 04/10/2006 | CLEARED BY OIPE CSR | | | |
| 7 | 11/14/2005 | 371 COMPLETION DATE | | | |
| 6 | 04/04/2006 | APPLICATION DISPATCHED FROM OIPE | | | |
| 5 | 04/04/2006 | NOTICE OF DO/EO ACCEPTANCE MAILED | | | |
| 4 | 11/14/2005 | ADDITIONAL APPLICATION FILING FEES | | | |
| 3 | 11/14/2005 | A STATEMENT BY ONE OR MORE INVENTORS SATISFYING THE REQUIREMENT UNDER 35 USC 115, OATH OF THE APPLIC | | | |

**Search Another: Application#** Search

**EXPLANATION OF PTA CALCULATION**

**EXPLANATION OF PTE CALCULATION**

To go back, right click here and select Back. To go forward, right click here and select Forward. To refresh, right click here and select Refresh.

Back to OASIS | Home page

UNITED STATES PATENT AND TRADEMARK OFFICE

Commissioner for Patents
United States Patent and Trademark Office
P.O. Box 1450
Alexandria, VA 22313-1450
www.uspto.gov

AKIN GUMP STRAUSS HAUER & FELD L.L.P.
ONE COMMERCE SQUARE
2005 MARKET STREET, SUITE 2200
PHILADELPHIA PA 19103

mailed 3/22/07

| | |
|---|---|
| In re Application of:<br>FITZPATRICK, J. MICHAEL ET AL.<br>Serial No.: 10/526,754<br>Filed: March 4, 2005<br>Docket: 9823-26U1<br>Title: FIDUCIAL MARKER HOLDER SYSTEM FOR SURGERY | DECISION ON REQUEST FOR PETITION TO MAKE SPECIAL FOR NEW APPLICATION UNDER 37 C.F.R. § 1.102 & M.P.E.P. § 708.02 (VIII) |

This is a decision on the petition filed on March 4, 2005 to make the above-identified application special under the accelerated examination procedure set forth in MPEP § 708.02(VIII) and in accordance with 37 C.F.R. § 1.102(d).

The petition to make the application special is **GRANTED**.

The petition has been reviewed and is found to be in compliance with the requirements for special status as set forth in Section 708.02 (VIII) of the Manual of Patent Examining Procedures (MPEP).

Applicant is advised that the examiner's search will be restricted to the subject matter encompassed by the claims. In the event that the application receives a first action rejection, Applicant is encouraged to arrange for an interview with the examiner, and to provide the examiner with a working copy of any proposed amendment one working day prior to the interview. Any amendment filed in response to a first action rejection that would require broadening the field of search will be treated as an improper response. See MPEP 708.02 (VIII) for a full explanation of the handling of applications after petition grant.

Any inquiry regarding this decision should be directed to Henry Yuen at 571-272-4856.

Petition GRANTED

Henry C. Yuen, Special Program Examiner
Technology Center 3700

UNITED STATES PATENT AND TRADEMARK OFFICE

UNITED STATES DEPARTMENT OF COMMERCE
United States Patent and Trademark Office
Address: COMMISSIONER FOR PATENTS
P.O. Box 1450
Alexandria, Virginia 22313-1450
www.uspto.gov

HOXIE & ASSOCIATES LLC
75 MAIN STREET , SUITE 301
MILLBURN, NJ 07041

Mail Date: 04/21/2010

| | | |
|---|---|---|
| **Applicant** | : Peter Buehlmayer | : DECISION ON REQUEST FOR |
| **Patent Number** | : 7612238 | : RECALCULATION of PATENT |
| **Issue Date** | : 11/03/2009 | : TERM ADJUSTMENT IN VIEW |
| **Appliction No** | : 10/526,760 | : OF WYETH AND NOTICE OF INTENT TO |
| **Filed** | : 03/04/2005 | : ISSUE CERTIFICATE OF CORRECTION |
| | | : |

The Request for Recalculation is **GRANTED** to the extent indicated.

The patent term adjustment has been determined to be **234** days. The USPTO will *sua sponte* issue a certificate of correction reflecting the amount of PTA days determined by the recalculation.

Prior to the issuance of the certificate of correction, the USPTO will afford patentee an opportunity to be heard and request reconsideration. Accordingly, patentee has **one month or thirty (30) days**, whichever is longer, to file a request for reconsideration of this patent term adjustment calculation. See 35 U.S.C. 154(b)(3)(B)(ii) and 37 CFR 1.322(a)(4). No extensions of time will be granted under 37 CFR 1.136.

Patentee should use document code PET.OP if electronically filing a request for reconsideration of this patent term adjustment calculation. The patentee must also include the information required by 37 CFR 1.705(b)(2) and the fee required by 37 CFR 1.18(e). If patentee does not file a timely request for reconsideration of this patent term adjustment calculation including the information required by 37 CFR 1.705(b)(2) and the fee required by 37 CFR 1.18(e), the USPTO will issue a certificate of correction reflecting the PTA determination noted above.

Patentee should be aware that in order to preserve the right to review in the United States District Court for the District of Columbia of the USPTO patent term adjustment determination, patentee must ensure that he or she also take the steps required under 35 U.S.C. 154(b)(4)(A) in a timely manner. Nothing in the request for recalculation should be construed as providing an alternative time frame for commencing a civil action under 35 U.S.C. 154(b)(4)(A).

Any questions concerning this decision should be directed to the Office of Patent Legal Administration at 571-272-7702.

UNITED STATES PATENT AND TRADEMARK OFFICE

UNITED STATES DEPARTMENT OF COMMERCE
United States Patent and Trademark Office
Address: COMMISSIONER FOR PATENTS
P.O. Box 1450
Alexandria, Virginia 22313-1450
www.uspto.gov

| APPLICATION NO. | FILING DATE | FIRST NAMED INVENTOR | ATTORNEY DOCKET NO. | CONFIRMATION NO. |
|---|---|---|---|---|
| 10/526,768 | 11/07/2005 | Enno Klussmann | Gulde-0058 | 6937 |

23599 7590 08/05/2009
MILLEN, WHITE, ZELANO & BRANIGAN, P.C.
2200 CLARENDON BLVD.
SUITE 1400
ARLINGTON, VA 22201

| EXAMINER |
|---|
| SWOPE, SHERIDAN |

| ART UNIT | PAPER NUMBER |
|---|---|
| 1652 | |

| NOTIFICATION DATE | DELIVERY MODE |
|---|---|
| 08/05/2009 | ELECTRONIC |

**Please find below and/or attached an Office communication concerning this application or proceeding.**

The time period for reply, if any, is set in the attached communication.

Notice of the Office communication was sent electronically on above-indicated "Notification Date" to the following e-mail address(es):

docketing@mwzb.com

UNITED STATES PATENT AND TRADEMARK OFFICE

Commissioner for Patents
United States Patent and Trademark Office
P.O. Box 1450
Alexandria, VA 22313-1450
www.uspto.gov

AUG 0 5 2009

MILLEN, WHITE, ZELANO & BRANIGAN, P.C.
2200 CLARENDON BLVD.
SUITE 1400
ARLINGTON VA 22201

| | |
|---|---|
| In re Application of: | : |
| Klussman et al. | : |
| Serial No.: 10/526,768 | : PETITION DECISION |
| Filed: November 7, 2005 | : |
| Attorney Docket No.: **Gulde-0058** | : |

This is in response to the petition under 37 CFR § 1.181, filed July 20, 2009, requesting that the finality of the Office action of March 12, 2009 be withdrawn. Here it is assumed that applicants intend March 20, 2009 as this is the date the final Office action was mailed.

It is noted that applicants filed this petition under 37 CFR § 1.181 on July 20, 2009 requesting relief from the finality of the Office action mailed March 20, 2009. This petition was not filed within two months from the mailing of the final Office action and is thus untimely. Nevertheless, a decision on this petition is rendered herein.

BACKGROUND

Applicants filed a proper RCE on December 30, 2008 concurrently with traversals of the examiner's rejections and claim amendments.

In response to the RCE, the examiner mailed a final Office action on March 20, 2009 setting a three month statutory limit for reply. At the time of this final Office action claims 1-20 were pending in the application. Claims 6-8 and 11-17 were withdrawn from consideration. Claims 1, 3-5, 9, 10 and 20 were again rejected under 35 U.S.C. 112, first paragraph, enablement. Claims 4, 5, 9 and 10 were again rejected under 35 U.S.C. 112, second paragraph. Claims 18 and 19 were objected to as being dependent upon a rejected base claim, but would be allowable if rewritten in independent form.

In response thereto, applicants filed this petition under 37 CFR § 1.181 on July 20, 2009, requesting that the finality of the Office action of March 20, 2009 be withdrawn.

DISCUSSION

The petition and the file history have been carefully considered.

In the petition filed on July 20, 2009, applicants argue:

> According to MPEP § 706.07(b):
>
> "The claims of an application for which a request for continued examination (RCE) has been filed may be finally rejected in the action immediately subsequent to the filing of the RCE... where all the claims in the application after [filing the RCE] (A) are drawn to the same invention claimed in the application prior to [filing the RCE], and (B) would be properly finally rejected on the grounds and art of record in the next Office action if they had been entered in the application prior to filing of the RCE under 37 CFR 1.114" *(emphasis* added).

Applicants further point out that the claims were amended at the time of filing of the RCE to delete a functional activity from broader claim 1 and to recite a biochemical aspect of the polypeptides in claim 21. Here it is assumed applicants intended claim 20 as there is no claim 21. Applicants' further note that the 35 U.S.C. § 112, first paragraph, enablement rejection was "re-evaluated" in light of applicants' amendments to the claims.

Finally, applicants ague "With respect to (A), it is clear that *not all claims* are directed to the same invention claimed prior to entry of the RCE submission of December 30, 2008. Moreover, the Office Action has not establish that the claims would have been properly finally rejected on the grounds and art of record in the next Office action if they had been entered. Accordingly, the finality of the Office Action is improper, and should be withdrawn".

It is decided that applicants' arguments are found persuasive that the final Office action issued March 20, 2009 was premature and, therefore, finality of the Office action will be withdrawn.

**DECISION**

The petition is **GRANTED.**

The Office action mailed March 20, 2009 is hereby vacated. The amendment submitted June 20, 2009 is hereby entered. The application is being returned to the examiner for consideration of the amendment submitted June 20, 2009.

Should there be any questions about this decision please contact Marianne C. Seidel, by letter addressed to Director, TC 1600, at the address listed above, or by telephone at 571-272-0584 or by facsimile sent to the general Office facsimile number, 703-872-9306.

Remy Yucel
Director, Technology Center 1600

UNITED STATES PATENT AND TRADEMARK OFFICE

Commissioner for Patents
United States Patent and Trademark Office
P.O. Box 1450
Alexandria, VA 22313-1450
www.uspto.gov

**MERCK AND CO., INC**
**P O BOX 2000**
**RAHWAY NJ 07065-0907**

MAILED

MAR 3 1 2009

OFFICE OF PETITIONS

| | | |
|---|---|---|
| In re Application of | : | |
| Mirlinda BIBA et al. | : | |
| Application No. 10/526,782 | : | DECISION ON PETITION |
| Filed: March 04, 2005 | : | |
| Attorney Docket No. 21181P | : | |

This is a decision on the petition under the unintentional provisions of 37 CFR 1.137(b), filed October 23, 2008, to revive the above-identified application.

The petition is **DISMISSED**.

Any request for reconsideration of this decision must be submitted within TWO (2) MONTHS from the mail date of this decision. Extensions of time under 37 CFR 1.136(a) are permitted. The reconsideration request should include a cover letter entitled "Renewed Petition under 37 CFR 1.137(b)." This is **not** a final agency action within the meaning of 5 U.S.C. § 704.

The application became abandoned for failure s to timely pay the issue and publication fees on or before September 26, 2008, as required by the Notice of Allowance and Fee(s) Due, mailed June 26, 2008, which set a statutory period for reply of three (3) months. Accordingly, the application became abandoned on September 27, 2008.

A grantable petition under 37 CFR 1.137(b) must be accompanied by: (1) the required reply, unless previously filed; (2) the petition fee as set forth in 37 CFR 1.17(m); (3) a statement that the entire delay in filing the required reply from the due date for the reply until the filing of a grantable petition pursuant to 37 CFR 1.137(b) was unintentional; and (4) any terminal disclaimer (and fee as set forth in 37 CFR 1.20(d)) required by 37 CFR 1.137(d). Where there is a question as to whether either the abandonment or the delay in filing a petition under 37 CFR 1.137 was unintentional, the Director may require additional information. See MPEP 711.03(c)(II)(C) and (D). The instant petition lacks item **(3).**

**Petitioner did not provide the required statement of unintentional delay.**

**37 CFR 1.137(b)(3) requires a statement that "the entire delay in filing the required reply from the due date for the reply until the filing of a grantable petition pursuant to 37 CFR 1.137(b) was unintentional."**

Further correspondence with respect to this matter should be addressed as follows:

By Mail: Mail Stop PETITION
Commissioner for Patents
P. O. Box 1450
Alexandria, VA 22313-1450

By hand: U. S. Patent and Trademark Office
Customer Service Window, Mail Stop Petitions
Randolph Building
401 Dulany Street
Alexandria, VA 22314

The centralized facsimile number is **(571) 273-8300.**

Telephone inquiries concerning this decision should be directed to the undersigned at (571) 272-4231.

Michelle R. Eason
Paralegal Specialist
Office of Petitions

UNITED STATES PATENT AND TRADEMARK OFFICE

Commissioner for Patents
United States Patent and Trademark Office
P.O. Box 1450
Alexandria, VA 22313-1450
www.uspto.gov

**MERCK AND CO., INC**
**P O BOX 2000**
**RAHWAY NJ 07065-0907**

MAILED
JUN 0 8 2009
OFFICE OF PETITIONS

| | | |
|---|---|---|
| In re Application of | : | |
| Mirlinda BIBA et al. | : | |
| Application No. 10/526,782 | : | DECISION ON PETITION |
| Filed: March 04, 2005 | : | |
| Attorney Docket No. 21181P | : | |

This is a decision on the renewed petition under 37 CFR 1.181 (no fee) requesting withdrawal of the holding of abandonment, filed April 16, 2009, which is being treated as a petition under 37 CFR 1.137(b) to revive an unintentionally abandoned application.

The petition under 37 CFR 1.137(b) is **GRANTED**.

The application became abandoned for failure s to timely pay the issue and publication fees on or before September 26, 2008, as required by the Notice of Allowance and Fee(s) Due, mailed June 26, 2008, which set a statutory period for reply of three (3) months. Accordingly, the application became abandoned on September 27, 2008.

The petition satisfies the requirements of 37 CFR 1.137(b) in that petitioner has supplied (1) the reply in the form of payment of the issue fee of $1,510.00 and the publication fee of $300.00, (2) the petition fee of $1,620.00; and (3) a proper statement of unintentional delay. Accordingly, the issue and publication fee payments are accepted as being unintentionally delayed.

Since the $1,620.00 petition fee was submitted with the petition on October 23, 2008, no fee is due. The petition fee submitted with the petition filed April 16, 2009 is unnecessary and will be credited to petitioner's deposit account.

It is not apparent whether the person signing the statement of unintentional delay was in a position to have firsthand or direct knowledge of the facts and circumstances of the delay at issue. Nevertheless, such statement is being treated as having been made as the result of a reasonable inquiry into the facts and circumstances of such delay. See 37 CFR 10.18(b) and Changes to Patent Practice and Procedure; Final Rule Notice, 62 Fed. Reg. 53131, 5317 (October

10, 1997), 1203 Off. Gaz. Pat. Office 63, 103 (October 21, 1997). In the event that such an inquiry has not been made, petitioner must make such an inquiry. If such inquiry results in the discovery that it is not correct that the entire delay in filing the required reply from the due date for the reply until the filing of a grantable petition pursuant to 37 CFR 1.137(b) was unintentional, petitioner must notify the Office.

Telephone inquiries concerning this decision should be directed to Michelle R. Eason at (571) 272-4231.

This application is being referred to Office of Data Management.

Michelle R. Eason

Michelle R. Eason
Paralegal Specialist
Office of Petitions

08 SEP 2005

UNITED STATES PATENT AND TRADEMARK OFFICE

Commissioner for Patents
United States Patent and Trademark Office
P.O. Box 1450
Alexandria, VA 22313-1450
www.uspto.gov

Richard J. Minnich
Fay, Sharpe, Fagan, Minnich & McKee, LLP
1100 Superior Avenue, 7th Floor
Cleveland, Ohio 44114

| | |
|---|---|
| In re Application of<br>COCHRAN et al.<br>Application No.: 10/526,799<br>PCT No.: PCT/US02/95385<br>Int. Filing Date: 21 May 2002<br>Priority Date: 21 May 2001<br>Attorney Docket No.: PSSZ 200072US<br>For: AN APPARATUS AND METHOD FOR PROVIDING SNAPSHOT ACTION THERMAL INFRARED IMAGING WITHIN . . . | DECISION ON PETITION<br>UNDER 37 CFR 1.137(b) |

The petition to revive under 37 CFR 1.137(b) filed 07 March 2005 in the above-captioned application is hereby **GRANTED** as follows:

Applicant's statement that "the entire delay in filing the required reply from the due date for the reply until the filing of a grantable petition under 37 CFR 1.137(b) was unintentional" meets the requirements of 37 CFR 1.137(b)(3).

A review of the application file reveals that applicant has submitted the basic national fee and the requirements of 37 CFR 1.137(b) have been satisfied. Therefore, the request to revive the application abandoned under 35 U.S.C. 371(d) is granted as to the National stage in the United States of America.

This application is being forwarded to the United States Designated/Elected Office (US/DO/EO) for continued processing including the issuance of a Notification of Missing Requirements (Form PCT/DO/EO/905) indicating that an oath or declaration in compliance with 37 CFR 1.497(a)-(b) is required.

Anthony Smith

Anthony Smith
Attorney-Advisor
Office of PCT Legal Administration
Telephone: (571) 272-3298
Facsimile: (571) 273-0459

UNITED STATES PATENT AND TRADEMARK OFFICE

Commissioner for Patents
United States Patent and Trademark Office
P.O. Box 1450
Alexandria, VA 22313-1450
www.uspto.gov

**Wilmer Hale/DC**
**1875 Pennsylvania Avenue, NW**
**Washington, DC 20006**

COPY MAILED

FEB 17 2009

OFFICE OF PETITIONS

| | | |
|---|---|---|
| In re Application of | : | |
| Sadahiro Hirayama et al. | : | |
| Application No. 10/526,803 | : | DECISION ON PETITION |
| Filed: November 8, 2005 | : | TO WITHDRAW |
| Attorney Docket No. 113072.129 US1 | : | FROM RECORD |
| | : | |

This is a decision on the Request to Withdraw as attorney or agent of record under 37 C.F.R. § 1.36(b), filed January 16, 2009.

The request is **APPROVED**.

A grantable request to withdraw as attorney/agent of record must be signed by every attorney/agent seeking to withdraw or contain a clear indication that one attorney is signing on behalf of another/others. A request to withdraw will not be approved unless at least 30 (thirty) days would remain between the date of approval and the later of the expiration date of a time to file a response or the expiration date of the maximum time period which can be extended under 37 C.F.R. § 1.136(a).

The request was signed by Irah H. Donner on behalf of all attorneys/agents associated with customer number 24395. All attorneys/agents associated with customer number 24395 have been withdrawn.

Applicant is reminded that there is no attorney of record at this time.

The correspondence address has been changed and is copied below.

Telephone inquiries concerning this decision should be directed to Kimberly Inabinet at 571-272-4618.

Kimberly Inabinet
Petitions Examiner
Office of Petitions

cc: Sadahiro Hirayama
4-22-14 Minami-Yukigaya, Ota-Ku
Tokyo, Japan 145-0066

UNITED STATES PATENT AND TRADEMARK OFFICE

UNITED STATES DEPARTMENT OF COMMERCE
United States Patent and Trademark Office
Address: COMMISSIONER FOR PATENTS
P.O. Box 1450
Alexandria, Virginia 22313-1450
www.uspto.gov

| APPLICATION NUMBER | FILING OR 371(C) DATE | FIRST NAMED APPLICANT | ATTY. DOCKET NO./TITLE |
|---|---|---|---|
| 10/526,803 | 11/08/2005 | Sadahiro Hirayama | 113072.129 US1 |

**CONFIRMATION NO. 7399**

**POWER OF ATTORNEY NOTICE**

24395
WILMERHALE/DC
1875 PENNSYLVANIA AVE., NW
WASHINGTON, DC 20006

*OC000000034581395*

Date Mailed: 02/17/2009

## NOTICE REGARDING CHANGE OF POWER OF ATTORNEY

This is in response to the Power of Attorney filed 01/16/2009.

- The withdrawal as attorney in this application has been accepted. Future correspondence will be mailed to the new address of record. 37 CFR 1.33.

/kainabinet/

---

Office of Data Management, Application Assistance Unit (571) 272-4000, or (571) 272-4200, or 1-888-786-0101

UNITED STATES PATENT AND TRADEMARK OFFICE

Commissioner for Patents
United States Patent and Trademark Office
P.O. Box 1450
Alexandria, VA 22313-1450
www.uspto.gov

January 14, 2010

Patent No. : 7,531,377 B2
Appl. No. : 10/526,804
Inventor(s) : Craig Edward Murphy, et al.
Issued : May 12, 2009
Title : **OPTICAL DEVICE**
Docket No. : **29610/CDT322A**

Re: Request for Certificate of Correction

Consideration has been given your request for the issuance of a certificate of correction for the above-identified patent under the provisions of Rule 1.323.

Assignees' names and addresses (assignment data) printed in a patent, are based *solely* on information supplied in the appropriate space for identifying the assignment data, i.e., item 3 of the Issue Fee Transmittal Form PTOL-85B. Granting of a request under 37 CFR 3.81(b) is required to correct applicant's error providing ***incorrect or erroneous*** assignment data, *before* issuance of a Certificate of Correction, under 37 CFR 1.323 *(see Manual of Patent Examining Procedures (M.P.E.P) Chp.1400, sect. 1481).* This procedure is required *at any time after the issue fee is paid*, including after issuance of the patent.

In view of the foregoing, your request, in this mater, is hereby denied.

A request to correct the Assignee under 37 CFR 3.81(b) should include:

A. **the processing fee set forth in 37 CFR 1.117(h) (currently $130);**
B. a statement that the failure to include the correct assignee name on the PTOL-85B was inadvertent; and
C. a copy of the Notice of Recordation of Assignment Document, reflecting the reel and frame number where the assignment(s) is recorded and/or reflecting proof of *the date* the assignment was submitted for recordation.

*In the Request*, Applicant(s) may request that the file be forwarded to Certificates of Correction Branch, for issuance of a Certificate of Correction, if the Request is granted.

Any request under 37 CFR 3.81(b) should be directed to the following address or facsimile number:

By mail: Mail Stop PETITIONS
Commissioner for Patents
Post Office Box 1450
Alexandria, VA 22313-1450

By hand: Customer Service Window
Mail Stop Petitions
Randolph Building
401 Dulany Street
Alexandria, VA 22314

By fax: (571) 273-8300
ATTN: Office of Petitions

If a fee (currently $100) was previously submitted for consideration of a Request for Certificate of Correction, under CFR 1.323, to correct assignment data, , no additional fee is required.

**Antonio Johnson**
For Mary F. Diggs
Decisions & Certificates
of Correction Branch
(571)272-0483

MARSHALL, GERSTEIN & BORUN LLP
233 SOUTH WACKER DRIVE
6300 SEARS TOWER
CHICAGO IL 60606-6357

UNITED STATES PATENT AND TRADEMARK OFFICE

Commissioner for Patents
United States Patent and Trademark Office
P.O. Box 1450
Alexandria, VA 22313-1450
www.uspto.gov

**MARSHALL, GERSTEIN & BORUN LLP**
**233 SOUTH WACKER DRIVE**
**6300 WILLIS TOWER**
**CHICAGO IL 60606-6357**

**MAILED**

APR 23 2010

**OFFICE OF PETITIONS**

| | | |
|---|---|---|
| In re Patent No. 7,531,377 | : | |
| Issue Date: May 12, 2009 | : | |
| Application No. 10/526,804 | : | ON PETITION |
| Filed: December 15, 2005 | : | |
| Attorney Docket No. 29610/CDT322A | : | |

This is a decision on the petition filed February 3, 2010, which is being treated as a request under 37 CFR 3.81(b)[1] to correct the name of the assignee on the front page of the above-identified patent by way of a Certificate of Correction.

The request is **GRANTED**.

Telephone inquiries concerning this decision may be directed to the undersigned at (571) 272-2991. Inquiries regarding the issuance of a certificate of correction should be directed to the Certificate of Correction Branch at (571) 272-4200.

The Certificates of Correction Branch will be notified of this decision granting the petition under 37 CFR 3.81(b) and directing issuance of the requested Certificate of Correction.

Terri Johnson
Petitions Examiner
Office of Petitions

[1] *See* MPEP 1309, subsection II; and Official Gazette of June 22, 2004.

UNITED STATES PATENT AND TRADEMARK OFFICE

Commissioner for Patents
United States Patent and Trademark Office
P.O. Box 1450
Alexandria, VA 22313-1450
www.uspto.gov

**MYERS WOLIN, LLC**
**100 HEADQUARTERS PLAZA**
**North Tower, 6th Floor**
**MORRISTOWN, NJ 07960-6834**

**COPY MAILED**

OCT 12 2007

**OFFICE OF PETITIONS**

| | | |
|---|---|---|
| In re Application of | : | |
| Gerald SUGERMAN | : | |
| Application No. 10/526,813 | : | DECISION ON PETITION |
| Filed: May 30, 2006 | : | |
| Attorney Docket No. VOC 419US | : | |

This is a decision on the petition under 37 CFR 1.137(b), filed August 30, 2007, to revive the above-identified application.

The petition is **GRANTED**.

The application became abandoned for failure to reply in a timely manner to the non-final Office action mailed, December 15, 2006, which set a shortened statutory period for reply of three (3) months. No extensions of time under the provisions of 37 CFR 1.136(a) was obtained. Accordingly, the application became abandoned on March 16, 2007.

The petition satisfies the conditions for revival pursuant to the provisions of 37 CFR 1.137(b) in that (1) the reply in the form of an amendment; (2) the petition fee $750; and (3) the required statement of unintentional delay have been received. Accordingly, the reply to the non-final Office action of December 15, 2006 is accepted as having been unintentionally delayed.

Telephone inquiries concerning this decision should be directed to the undersigned at (571) 272-4231.

The application file is being referred to Technology Center AU 1755 for appropriate action on the concurrently filed amendment.

Michelle R. Eason

Michelle R. Eason
Paralegal Specialist
Office of Petitions

UNITED STATES PATENT AND TRADEMARK OFFICE

Commissioner for Patents
United States Patent and Trademark Office
P.O. Box 1450
Alexandria, VA 22313-1450
www.uspto.gov

**Baker & Hostetler LLP**
**Attn: Jim Coffman**
**45 Rockefeller Plaza**
**New York NY 10111**

COPY MAILED

JUL 0 2 2009

OFFICE OF PETITIONS

ON PETITION

| | | |
|---|---|---|
| In re Application of | : | |
| Kilwon Cho et al. | : | |
| Application No. 10/526,836 | : | |
| Filed: March 4, 2005 | : | |
| Attorney Docket No. DE1615 | : | |

This is a decision on the petition under the unintentional provisions of 37 CFR 1.137(b), filed February 24, 2009, to revive the above-identified application.

The petition is **DISMISSED**.

Any request for reconsideration of this decision must be submitted within TWO (2) MONTHS from the mail date of this decision. Extensions of time under 37 CFR 1.136(a) are permitted. The reconsideration request should include a cover letter entitled "Renewed Petition under 37 CFR 1.137(b)." This is **not** a final agency action within the meaning of 5 U.S.C. § 704.

The application became abandoned for failure to timely reply within the meaning of 37 CFR 1.113 to the final Office action, mailed June 9, 2008, which set a shortened statutory period for reply of three (3) months. No extensions of time under the provisions of 37 CFR 1.136(a) were obtained. Accordingly, the application became abandoned on September 10, 2008.

A grantable petition under 37 CFR 1.137(b) must be accompanied by: (1) the required reply, unless previously filed; (2) the petition fee as set forth in 37 CFR 1.17(m); (3) a statement that the entire delay in filing the required reply from the due date for the reply until the filing of a grantable petition pursuant to 37 CFR 1.137(b) was unintentional; and (4) any terminal disclaimer (and fee as set forth in 37 CFR 1.20(d)) required by 37 CFR 1.137(d). Where there is a question as to whether either the abandonment or the delay in filing a petition under 37 CFR 1.137 was unintentional, the Director may require additional information. See MPEP 711.03(c)(II)(C) and (D). The instant petition lacks item(s) (1).

The proposed reply required for consideration of a petition to revive must be a Notice of Appeal (and appeal fee required by 37 CFR 41.20(b)(2)), an amendment that *prima facie* places the application in condition for allowance, a Request for Continued Examination (RCE) and submission (37 CFR 1.114), or the filing of a continuing application under 37 CFR 1.53(b). *See* MPEP 711.03(c)(III)(A)(2). Since the amendment submitted on July 14, 2008, does not *prima facie* place the application in condition for allowance, the reply required must be a Notice of Appeal (and appeal fee), RCE, or the filing of a continuing application under 37 CFR 1.53(b). A copy of the Advisory Action explaining why the amendment was not accepted is enclosed with this decision.

Further correspondence with respect to this matter should be addressed as follows:

By Mail: Mail Stop PETITION
Commissioner for Patents
P. O. Box 1450
Alexandria, VA 22313-1450

By hand: U. S. Patent and Trademark Office
Customer Service Window, Mail Stop Petitions
Randolph Building
401 Dulany Street
Alexandria, VA 22314

The centralized facsimile number is **(571) 273-8300.**

Telephone inquiries concerning this decision should be directed to JoAnne Burke at (571) 272-4584.

Ramesh Krishnamurthy

Ramesh Krishnamurthy
Petitions Examiner
Office of Petitions

Enclosed: Copy of Advisory Action

| Advisory Action Before the Filing of an Appeal Brief | Application No. 10/526,836 | Applicant(s) CHO ET AL. | |
|---|---|---|---|
| | Examiner JAMES W. ROGERS | Art Unit 1618 | |

***--The MAILING DATE of this communication appears on the cover sheet with the correspondence address --***

THE REPLY FILED 24 February 2009 FAILS TO PLACE THIS APPLICATION IN CONDITION FOR ALLOWANCE.

1. ☒ The reply was filed after a final rejection, but prior to or on the same day as filing a Notice of Appeal. To avoid abandonment of this application, applicant must timely file one of the following replies: (1) an amendment, affidavit, or other evidence, which places the application in condition for allowance; (2) a Notice of Appeal (with appeal fee) in compliance with 37 CFR 41.31; or (3) a Request for Continued Examination (RCE) in compliance with 37 CFR 1.114. The reply must be filed within one of the following time periods:
   a) ☒ The period for reply expires 3 months from the mailing date of the final rejection.
   b) ☐ The period for reply expires on: (1) the mailing date of this Advisory Action, or (2) the date set forth in the final rejection, whichever is later. In no event, however, will the statutory period for reply expire later than SIX MONTHS from the mailing date of the final rejection.

   Examiner Note: If box 1 is checked, check either box (a) or (b). ONLY CHECK BOX (b) WHEN THE FIRST REPLY WAS FILED WITHIN TWO MONTHS OF THE FINAL REJECTION. See MPEP 706.07(f).

Extensions of time may be obtained under 37 CFR 1.136(a). The date on which the petition under 37 CFR 1.136(a) and the appropriate extension fee have been filed is the date for purposes of determining the period of extension and the corresponding amount of the fee. The appropriate extension fee under 37 CFR 1.17(a) is calculated from: (1) the expiration date of the shortened statutory period for reply originally set in the final Office action; or (2) as set forth in (b) above, if checked. Any reply received by the Office later than three months after the mailing date of the final rejection, even if timely filed, may reduce any earned patent term adjustment. See 37 CFR 1.704(b).

NOTICE OF APPEAL

2. ☐ The Notice of Appeal was filed on _____. A brief in compliance with 37 CFR 41.37 must be filed within two months of the date of filing the Notice of Appeal (37 CFR 41.37(a)), or any extension thereof (37 CFR 41.37(e)), to avoid dismissal of the appeal. Since a Notice of Appeal has been filed, any reply must be filed within the time period set forth in 37 CFR 41.37(a).

AMENDMENTS

3. ☒ The proposed amendment(s) filed after a final rejection, but prior to the date of filing a brief, will not be entered because
   (a) ☒ They raise new issues that would require further consideration and/or search (see NOTE below);
   (b) ☐ They raise the issue of new matter (see NOTE below);
   (c) ☐ They are not deemed to place the application in better form for appeal by materially reducing or simplifying the issues for appeal; and/or
   (d) ☐ They present additional claims without canceling a corresponding number of finally rejected claims.

   NOTE: *Applicants proposed amendments to the claims after final would raise new issues in regards to 35 U.S.C. 112, second paragraph because claims 8,10 and 15 are unclear and indefinite. Particularly claim 1, formula 1, contains a carbon atom that is penta substituted and another carbon atom that only contains two substituents, the carbons are contained on the polymer block with designated with subscript y, (CCOCH3HO)y. Furthermore claims 10 and 15 do not further limit independent claim 8.* (See 37 CFR 1.116 and 41.33(a)).

4. ☐ The amendments are not in compliance with 37 CFR 1.121. See attached Notice of Non-Compliant Amendment (PTOL-324).
5. ☐ Applicant's reply has overcome the following rejection(s): _____.
6. ☐ Newly proposed or amended claim(s) _____ would be allowable if submitted in a separate, timely filed amendment canceling the non-allowable claim(s).
7. ☒ For purposes of appeal, the proposed amendment(s): a) ☒ will not be entered, or b) ☐ will be entered and an explanation of how the new or amended claims would be rejected is provided below or appended.
   The status of the claim(s) is (or will be) as follows:
   Claim(s) allowed: _____.
   Claim(s) objected to: _____.
   Claim(s) rejected: *1-15*.
   Claim(s) withdrawn from consideration: _____.

AFFIDAVIT OR OTHER EVIDENCE

8. ☐ The affidavit or other evidence filed after a final action, but before or on the date of filing a Notice of Appeal will not be entered because applicant failed to provide a showing of good and sufficient reasons why the affidavit or other evidence is necessary and was not earlier presented. See 37 CFR 1.116(e).
9. ☐ The affidavit or other evidence filed after the date of filing a Notice of Appeal, but prior to the date of filing a brief, will not be entered because the affidavit or other evidence failed to overcome all rejections under appeal and/or appellant fails to provide a showing a good and sufficient reasons why it is necessary and was not earlier presented. See 37 CFR 41.33(d)(1).
10. ☐ The affidavit or other evidence is entered. An explanation of the status of the claims after entry is below or attached.

REQUEST FOR RECONSIDERATION/OTHER

11. ☐ The request for reconsideration has been considered but does NOT place the application in condition for allowance because: _____.
12. ☐ Note the attached Information *Disclosure Statement*(s). (PTO/SB/08) Paper No(s). _____
13. ☐ Other: _____.

UNITED STATES PATENT AND TRADEMARK OFFICE

Commissioner for Patents
United States Patent and Trademark Office
P.O. Box 1450
Alexandria, VA 22313-1450
www.uspto.gov

**David A. Einhorn, Esq.**
**Baker & Hostetler LLP**
**45 Rockefeller Plaza**
**New York NY 10111**

**COPY MAILED**

DEC 17 2009

**OFFICE OF PETITIONS**

| | | |
|---|---|---|
| In re Application of | : | |
| Kilwon Cho et al. | : | |
| Application No. 10/526,836 | : | ON PETITION |
| Filed: March 4, 2005 | : | |
| Attorney Docket No. DE1615 | : | |

This is a decision on (a) the renewed petition under the unintentional provisions of 37 CFR 1.137(b), filed July 13, 2009, to revive the above-identified application and (b)on the petition filed August 3, 2009, to withdraw the previously filed Request for Continued Examination (RCE), that is being treaded under 37 CFR 1.182.

The petition under 37 CFR 1.182 to withdraw the RCE is **DISMISSED**.

A petition filed under 37 CFR 1.182 requires a fee set forth in 37 CFR 1.17(f). The authorization to charge fees included on page 2 of the request filed August 3, 2009, authorized the Commissioner "to charge all fees required to facilitate allowance of this application" is not specific enough. In the absence of a fee the petition under § 1.182 could not be considered on the merits. However, petitioner should note that the Office practice does not allow for a "withdrawal" of a properly filed RCE.

The petition under 37 CFR 1.137(b) is **GRANTED**.

The application became abandoned for failure to timely reply within the meaning of 37 CFR 1.113 to the final Office action, mailed June 9, 2008, which set a shortened statutory period for reply of three (3) months. No extensions of time under the provisions of 37 CFR 1.136(a) were obtained. Accordingly, the application became abandoned on September 10, 2008.

The petition satisfies the requirements of 37 CFR 1.137(b) in that petitioner has supplied (1) the reply in the form of a Request for Continued Examination (RCE) and fee of $810, and the submission required by 37 CFR 1.114; (2) the petition fee of $1,620; and (3) a proper statement of unintentional delay.

Telephone inquiries concerning this decision should be directed to the JoAnne Burke at (571)272-4584.

This application is being referred to Technology Center AU 1618 for processing of the RCE and for appropriate action by the Examiner in the normal course of business on the amendment submitted in accordance with 37 CFR 1.114.

Ramesh Krishnamurthy

Ramesh Krishnamurthy
Petitions Examiner
Office of Petitions

UNITED STATES PATENT AND TRADEMARK OFFICE

Commissioner for Patents
United States Patent and Trademark Office
P.O. Box 1450
Alexandria, VA 22313-1450
www.uspto.gov

18 MAY 2007

Devin D. McCarthy
ROACH BROWN McCARTHY & GRUBER
420 Main Street
1620 Liberty Building
Buffalo, NY 14202

| | | |
|---|---|---|
| In re Application of | : | |
| WONG *et al* | : | |
| U.S. Application No.: 10/526,845 | : | |
| PCT No.: PCT/IL2005/000194 | : | **DECISION ON** |
| Int. Filing Date: 15 February 2005 | : | **PETITION FOR REVIVAL** |
| Priority Date: 27 May 2004 | : | **UNDER 37 CFR 1.137(b)** |
| Attorney Docket No.: 0-05-037 | : | |
| For: A STAPLING DEVICE | : | |

Applicants' petition to revive under 37 CFR 1.137(b) filed on 27 April 2007 is hereby **GRANTED** as follows:

A declaration in compliance with 37 CFR 1.497(a) and (b) was provided. The petition fee has been paid. Applicants made the required statement pursuant to 37 CFR 1.137(b)(3). A terminal disclaimer is not required.

Accordingly, all requirements under 37 CFR 1.137(b) have been satisfied.

Applicants have completed the requirements for acceptance under 35 U.S.C. 371(c). The application has an international filing date of 15 February 2005 under 35 U.S.C. 363 and a 35 U.S.C. 371(c)(1), (c)(2) and (c)(4) date of 27 April 2007.

This application is being forwarded to the National Stage Processing Division of the Office of PCT Operations for continued processing.

James Thomson

James Thomson
Attorney Advisor
Office of PCT Legal Administration

Tel.: (571) 272-3302

United States Patent and Trademark Office

02 OCT 2006

Commissioner for Patents
United States Patent and Trademark Office
P.O. Box 1450
Alexandria, VA 22313-1450
www.uspto.gov

SEED INTELLECTUAL PROPERTY LAW GROUP PLLC
701 FIFTH AVE
SUITE 6300
SEATTLE WA 98104-7092

| | | |
|---|---|---|
| In re Application of | : | |
| Podschun et al. | : | |
| Application No. 10/526,846 | : | |
| PCT No.: PCT/EP03/09788 | : | |
| Int. Filing Date: 03 September 2003 | : | COMMUNICATION |
| Priority Date: 04 September 2002 | : | |
| Atty. Docket No.: 740158.401USPC | : | |
| For: Increasing Of The Resorption Of | : | |
| Substances Via Skin And Mucous... | : | |

This is in response to the correspondence filed on 17 May 2006, which is being treated as a renewed submission under 37 CFR 1.42.

## DISCUSSION

In a decision mailed on 17 March 2006, the declaration of the inventors filed on 18 October 2005 was not accepted under 37 CFR 1.42 because

> Further examination of the declaration reveals that it appears to have been assembled using separate sheets signed by each of Trutz Podschun, Eberhard Hildt and Ricarda Neuner-Hofschneider. To the extent that counsel has not presented copies of the complete declaration documents signed by each, it is not clear whether each signatory executed a complete copy of the declaration document. Further, the sheets signed by inventors Podschun and Hildt do not nominate Hofschneider as an inventor. Moreover, the "Declaration Supplemental Sheet" signed by the legal representative provides her citizenship, residence and postal address information, but the declaration does NOT provide citizenship information for the deceased inventor as required by 37 CFR 1.497(b)(2)(it is noted that his citizenship, residence and postal address information appear on the Application Data Sheet filed on 02 March 2005, but an ADS may not be relied upon to furnish the citizenship information in lieu of the declaration). Based on the totality of the circumstances presented, it would not be appropriate to accept the declaration under 37 CFR 1.42 at this time.

The decision also

> noted that the computer-readable form (CRF) filed on 18 October 2005 is defective for the reasons identified on the attached "Raw Sequence Listing Error Report." Applicants are required to file an acceptable CRF within the time period set below for response to this decision.

In response, applicants have submitted a new declaration of the inventors which lists the citizenship of the deceased inventor and which also provides the citizenship, residence and mailing address of Ricarda Neuner-Hofschneider, who has executed the declaration on his behalf in the

capacity of "legal representative." Each copy of the declaration nominates the same inventive entity as appeared in the published international application. As such, it would be appropriate to accept the declaration filed on 17 May 2006 under 37 CFR 1.42.

With regard to the requirements regarding the CRF, review of the records reveals that the CRF filed on 17 May 2006 was technically acceptable, and that it has been entered into the appropriate USPTO database. Counsel states that "the enclosed electronic and paper copies of the Sequence Listing include no new matter that goes beyond the original application as filed." Applicants have also submitted a "Declaration" signed by Monica Andresen in the capacity of "Biotechnology Paralegal," stating that "to the best of my knowledge, the content of the paper entitled 'Sequence Listing' and the computer readable copy contained within the compact disc are the same.'" The correspondence filed on 17 May 2006 also included an amendment directing the entry of the sequence listing into the application. However, in that the statement signed by Ms. Andresen was not signed by a registered practitioner, it would not be appropriate to accept it. Counsel is required to provide a proper statement, signed by a registered practitioner, that the paper (or compact disc) sequence listing is identical to the CRF of the sequence listing.

## CONCLUSION

The declaration is **ACCEPTED** under 37 CFR 1.42.

This application is being forwarded to the National Stage Processing Branch for further processing, including the preparation and mailing of a Notification of Missing Requirements (Form PCT/DO/EO/916) requiring the submission of a proper statement that the paper (or compact disc) sequence listing is identical to the CRF of the sequence listing.

Richard Cole
PCT Legal Examiner
Office of PCT Legal Administration

George M. Dombroske
PCT Legal Examiner
Office of PCT Legal Administration
Tel: (571) 272-3283
Fax: (571) 273-0459

United States Patent and Trademark Office

Commissioner for Patents
United States Patent and Trademark Office
P.O. Box 1450
Alexandria, VA 22313-1450
www.uspto.gov

0 2 APR 2007

SEED INTELLECTUAL PROPERTY LAW GROUP PLLC
701 FIFTH AVE
SUITE 5400
SEATTLE WA 98104

| | | |
|---|---|---|
| In re Application of | : | |
| Podschun et al. | : | |
| Application No. 10/526,846 | : | DECISION ON |
| PCT No.: PCT/EP03/09788 | : | |
| Int. Filing Date: 03 September 2003 | : | PETITION UNDER |
| Priority Date: 04 September 2002 | : | |
| Atty. Docket No.: 740158.401USPC | : | 37 CFR 1.181 |
| For: Increasing Of The Resorption Of | : | |
| Substances Via Skin And Mucous... | : | |

This is in response to the correspondence filed on 11 March 2007, which raises issues under 35 U.S.C. 371.

## BACKGROUND

On 22 December 2006, a Notification of Defective Response (Form PCT/DO/EO/916) was mailed to applicants, requiring a statement that the content of the CRF is identical to the written Sequence Listing and, where applicable, contains no new matter.

On 05 January 2007, Atty. Stephen Rosenman, Ph.D. filed (*inter alia*) a statement that "to the best of my knowledge, the content of the paper entitled 'Sequence Listing' and the computer readable copy contained within the compact disc are the same."

On 22 February 2007, a further Notification of Defective Response was mailed to applicants, requiring a statement that the content of the CRF is identical to the written Sequence Listing and, where applicable, contains no new matter.

## DISCUSSION

Applicants request vacatur of the Notification of Defective Response (Form PCT/DO/EO/916) mailed on 22 February 2007 on the grounds that "the application fully complies with the requirements of 37 CFR 1.821(e), 1.821(f), 1.821(g), 1.825(b), or 1.825(d), and that the Notice of Defective Response mailed by the PTO on February 22, 2007 was issued in error."

In review of the application file history, a decision mailed on 02 October 2006 accepted the declaration of the inventors filed on 17 May 2006 under 37 CFR 1.42. In that same decision, it was noted that

> With regard to the requirements regarding the CRF, review of the records reveals that the CRF filed on 17 May 2006 was technically acceptable, and that it has been entered into the appropriate USPTO database. Counsel states that "the enclosed electronic and paper copies of the Sequence Listing include no new matter that goes beyond the original application as filed." Applicants have also

submitted a "Declaration" signed by Monica Andresen in the capacity of "Biotechnology Paralegal," stating that "to the best of my knowledge, the content of the paper entitled 'Sequence Listing' and the computer readable copy contained within the compact disc are the same.'" The correspondence filed on 17 May 2006 also included an amendment directing the entry of the sequence listing into the application. However, in that the statement signed by Ms. Andresen was not signed by a registered practitioner, it would not be appropriate to accept it. Counsel is required to provide a proper statement, signed by a registered practitioner, that the paper (or compact disc) sequence listing is identical to the CRF of the sequence listing.

Subsequently, on 22 December 2006, the USPTO mailed a Notification of Defective Response to counsel and, on 05 January 2007, applicants filed an acceptable and timely response (to wit, the statement by Atty. Rosenman that "to the best of my knowledge, the content of the paper entitled 'Sequence Listing' and the computer readable copy contained within the compact disc are the same"). Therefore, the further Notification of Defective Response mailed on 22 February 2007 was inappropriate, and it is hereby **VACATED**.

## CONCLUSION

The petition under 37 CFR 1.181 is **GRANTED**.

This application is being forwarded to the National Stage Processing Branch for further processing. The date of this application under 35 U.S.C. 371(c)(1), (2) and (4) is **17 May 2006**.

George Dombroske
PCT Legal Examiner
Office of PCT Legal Administration
Tel: (571) 272-3283
Fax: (571) 273-0459

21 NOV 2005

UNITED STATES PATENT AND TRADEMARK OFFICE

#4

COMMISSIONER FOR PATENTS
UNITED STATES PATENT AND TRADEMARK OFFICE
P.O. BOX 1450
ALEXANDRIA, VA 22313-1450
www.uspto.gov

David A. Guerra
933 OLEANDER WAY SOUTH, SUITE 4
SOUTH PASADENA, FL 33707

| | |
|---|---|
| In re Application of STANISHLAW WIERZBIKCKI | : |
| Application No.: 10/526,910 | : |
| PCT Application No.: PCT/AU03/01135 | : |
| Int. Filing Date: 4 September 2003 | : DECISION ON PETITION |
| Priority Date Claimed: 4 September 2002 | : UNDER 37 CFR 1.137(b) |
| Attorney Docket No.: AP049-05 | : |
| For: SOCK PEG | : |
| | : |

Applicants' Petition For Revival Under 37 CFR 1.137(b), filed in the United States Patent and Trademark Office on 27 September 2005, is **GRANTED**.

## BACKGROUND

On 4 September 2003, applicant filed international application PCT/AU03/01135. The international application claims a priority date of 4 September 2002 and designates the United States. The deadline for paying the basic national fee in the United States and providing a copy of the international application as required under 37 CFR 1.495(b) was thirty months from the priority date, that is 4 March 2005. Applicant missed this deadline.

On 7 March 2005, three days after the deadline, a copy of the international application as required by 35 U.S.C. 371(c)(2), an executed declaration as required by 35 U.S.C. 371(c)(4), an Information Disclosure Statement under 37 CFR 1.97 and 1.98, an Application Data Sheet under 37 CFR 1.76, a power of attorney and/or change of address letter and various fees totaling $500.00, including the basic national fee was received.

On 19 September 2005, a notice of abandonment was mailed to the applicant.

On 27 September 2005, applicant filed the instant petition for revival accompanied by the petition fee of $750.00 as required by 37 CFR 1.137(b).

## DISCUSSION

A petition to revive an abandoned application under 37 CFR 1.137(b) must be filed without intentional delay from the time the application became abandoned and/or applicant first became aware of the abandoned status of the application. A petition under 37 CFR 1.137(b) must be accompanied by (1) a proper reply, (2) a statement that the entire delay in filing the required reply from the due date for the reply until the filing of a grantable petition

was unintentional, (3) the petition fee required by law, and (4) a terminal disclaimer and fee (if the international application was filed prior to June 8, 1995). A payment of the basic national fee constitutes a proper reply for entry into the national stage.

With regard to the requirements of 37 CFR 1.137(b)(1), the reply to the Notice of Abandonment is satisfied.

With regard to the requirements of 37 CFR 1.137(b)(2), the payment of the basic national fee of $500.00 is satisfied.

With regard to 37 CFR 1.137(b)(3), applicant's assertion on page 2 of the petition that "the national phase entry of the above-identified application under 35 U.S.C. 371 was unintentionally filed without the copy of the international application by the 30th month" has been construed as meaning "the entire delay in filing the required reply from the due date for the reply until the filing of a grantable petition was unintentional" in accordance with 37 CFR 1.137(b)(3). If this interpretation is not correct, applicants are required to promptly notify this Office in response to this decision.

With regard to 37 CFR 1.137(b)(4), a terminal disclaimer is not required because the application was filed on or after 08 June 1995.

A review of the application file reveals that applicant has satisfied the requirements of 37 CFR 1.137(b), and that the application satisfies the requirements under 35 U.S.C. 371 for entry into the national stage in the United States.

Applicant is reminded that the fee for filing a declaration after the 30th month has not been paid.

## CONCLUSION

For the above reasons, the petition filed on 27 September 2005 under 37 CFR 1.137(b) is **GRANTED** without prejudice.

The application has an international filing date of 04 September 2003, under 35 U.S.C. 363, and a 35 U.S.C. 371(c)(1),(2), and (4) date of 07 March 2005.

This application is being forwarded to the National Stage Processing Branch of the International Division for further processing in accordance with this decision including the preparation and mailing of a Notification of Missing Requirements, form 905, requiring the late fee for the declaration.

Gary L. Welch
PCT Legal Administration Detailee
Telephone: 571-272-6095
Facsimile: 571-273-0459

Richard Cole
PCT Legal Examiner
Office of PCT Legal Administration

0 7 NOV 2008

UNITED STATES PATENT AND TRADEMARK OFFICE

Commissioner for Patents
United States Patent and Trademark Office
P.O. Box 1450
Alexandria, VA 22313-1450
www.uspto.gov

DAVID A. GUERRA
INTERNATIONAL PATENT GROUP, LLC
2025 17TH AVENUE N.W.
CALGARY AB T2M 0S7
CANADA

| | | |
|---|---|---|
| In re Application of | : | |
| WIERZBICKI, Stanislaw John, et al. | : | |
| Application No. 10/526,910 | : | DECISION |
| PCT No.: PCT/AU2003/001135 | : | |
| Int. Filing Date: 04 September 2003 | : | ON PETITION UNDER |
| Priority Date: 04 September 2002 | : | |
| Attorney Docket No.: AP049-05 | : | 37 CFR 1.8 |
| For: SOCK PEG | : | |

This is a decision on applicants' "Response to Notification of Abandonment," filed on 24 September 2008.

## BACKGROUND

On 08 December 2005, the Office mailed Notification of Insufficient Fees (Form PCT/DO/EO/923) which required payment of the fee for late filing of the search fee, examination fee or oath or declaration and additional claim fees. The Notification set a two (2) month period for response.

On 07 January 2008 and 29 August 2008, the Office mailed a Notification of Abandonment (Form PCT/DO/EO/909), indicating that the application went abandoned for failure to timely reply to the Notification of Insufficient Fees.

On 24 September 2008, applicants filed this petition claiming that applicants had timely responded to the Notification via facsimile on 05 January 2006, enclosing a copy of the response and a petition to revive under 37 CFR 1.137(b).

## DISCUSSION

Petition to Withdraw Holding of Abandonment

Applicants claim to have responded to the Notification of Insufficient Fees on 05 January 2006, but the facsimile transmission is not present in the file. However, 37 CFR 1.8(b) states, in part:

> In the event that correspondence is considered timely filed by being mailed or transmitted in accordance with paragraph (a) of this section, but not received in the U.S. Patent and Trademark Office after a reasonable amount of time has elapsed from the time of mailing or transmitting of correspondence, or after the

> application is held to be abandoned, or the proceeding is dismissed, terminated, or decided with prejudice, the correspondence will be considered timely if the party who forwarded such correspondence:
>
> (1) Informs the Office of the previous mailing or transmission of the correspondence promptly after becoming aware that the Office has no evidence of receipt of the correspondence;
> (2) Supplies an additional copy of the previously mailed or transmitted correspondence and certificate; and
> (3) Includes a statement which attests on a personal knowledge basis or to the satisfaction of the Director to the previous timely mailing or transmission. If the correspondence was sent by facsimile transmission, a copy of the sending unit's report confirming transmission may be used to support this statement.

Items (1) and (2) have been satisfied. Applicant filed the petition promptly after the mailing of the Notification of Abandonment. Applicant supplied a copy of the submission and the certificate of facsimile transmission.

Item (3) has not been satisfied. Applicant has not furnished a statement based on first hand knowledge or to the satisfaction of the Director that the correspondence was sent. In fact, the statement indicates that an error may have occurred in transmission. Applicant has not furnished their transmission report showing that the transmission was successful.

As applicant has not established the 05 January 2006 transmission, the Office will address the petition under 37 CFR 1.137(b) on the merits.

Petition Under 37 CFR 1.137(b)

Applicant states that the entire delay in filing the required reply from the due date for the required reply until the filing of a grantable petition under 37 CFR 1.137(b) was unintentional, as required by 37 CFR 1.137(b)(3). The appropriate reply and petition fee have been submitted. A terminal disclaimer is not required as the application was filed on or after 08 June 1995. Accordingly, all requirements under 37 CFR 1.137(b) have been satisfied.

## CONCLUSION

For the above reasons, applicants' petition under 37 CFR 1.8 to withdraw the holding of abandonment is **DISMISSED**, without prejudice. Applicants' petition under 37 CFR 1.137(b) is **GRANTED**.

A request for reconsideration must be filed within TWO (2) MONTHS from the mail date of this decision. Extensions of time under 37 CFR 1.136(a) are available.

Any further correspondence with respect to this matter may be filed electronically via EFS-Web or if mailed, should be addressed to the Mail Stop PCT, Commissioner for Patents, Office of PCT Legal Administration, P.O. Box 1450, Alexandria, Virginia 22313-1450, with the contents of the letter marked to the attention of the Office of PCT Legal Administration.

This application is being referred to the National Phase Processing Branch of the Office of Patent Application Processing for further action consistent with this decision. The application has a 35 USC 371(c)(1), (c)(2) and (c)(4) date of 24 September 2008.

/Erin P. Thomson/

Erin P. Thomson
Attorney Advisor
PCT Legal Administration

Telephone: (571) 272-3292
Facsimile: (571) 273-0459

UNITED STATES PATENT AND TRADEMARK OFFICE

Commissioner for Patents
United States Patent and Trademark Office
P.O. Box 1450
Alexandria, VA 22313-1450
www.uspto.gov

J R Deshmukh
458 Cherry Hill Road
Princeton NJ 08540

**MAILED**

MAY 10 2010

OFFICE OF PETITIONS

| | | |
|---|---|---|
| In re Application of | : | |
| Thinh T. Nguyen | : | |
| Application No. 10/526,914 | : | DECISION ON PETITION |
| Filed: March 7, 2005 | : | |
| Attorney Docket No. MOL0667 | : | |

This is a decision on the petition under the unintentional provisions of 37 CFR 1.137(b), filed March 3, 2010, to revive the above-identified application.

The petition is **GRANTED**.

The application became abandoned for failure to reply in a timely manner to the Restriction Requirement, mailed April 28, 2008, which set a shortened statutory period for reply of one (1) month or thirty (30) days (whichever is later). No extensions of time under the provisions of 37 CFR 1.136(a) were obtained. Accordingly, the application became abandoned on May 29, 2008.

The petition satisfies the requirements of 37 CFR 1.137(b) in that petitioner has supplied (1) the reply in the form of an Election, (2) the petition fee of $1,620, and (3) a proper statement of unintentional delay.

Telephone inquiries concerning this decision should be directed to JoAnne Burke at (571)272-4584.

This application is being referred to Technology Center AU 1795 for appropriate action by the Examiner in the normal course of business on the reply received.

/JoAnne Burke/
JoAnne Burke
Petitions Examiner
Office of Petitions

UNITED STATES PATENT AND TRADEMARK OFFICE

UNITED STATES DEPARTMENT OF COMMERCE
United States Patent and Trademark Office
Address: COMMISSIONER FOR PATENTS
P.O. Box 1450
Alexandria, Virginia 22313-1450
www.uspto.gov

DUNLAP CODDING, P.C. - CRISTAL
P.O. BOX 16370
OKLAHOMA CITY, OK 73113

Mail Date: 06/28/2010

| | | |
|---|---|---|
| **Applicant** | : Richard P. Anderson | : DECISION ON REQUEST FOR |
| **Patent Number** | : 7632333 | : RECALCULATION of PATENT |
| **Issue Date** | : 12/15/2009 | : TERM ADJUSTMENT IN VIEW |
| **Application No** | : 10/526,918 | : OF WYETH AND NOTICE OF INTENT TO |
| **Filed** | : 11/14/2005 | : ISSUE CERTIFICATE OF CORRECTION |
| | | : |

The Request for Recalculation is **GRANTED** to the extent indicated.

The patent term adjustment has been determined to be **461** days. The USPTO will *sua sponte* issue a certificate of correction reflecting the amount of PTA days determined by the recalculation.

Prior to the issuance of the certificate of correction, the USPTO will afford patentee an opportunity to be heard and request reconsideration. Accordingly, patentee has **one month or thirty (30) days**, whichever is longer, to file a request for reconsideration of this patent term adjustment calculation. See 35 U.S.C. 154(b)(3)(B)(ii) and 37 CFR 1.322(a)(4). No extensions of time will be granted under 37 CFR 1.136.

Patentee should use document code PET.OP if electronically filing a request for reconsideration of this patent term adjustment calculation. The patentee must also include the information required by 37 CFR 1.705(b)(2) and the fee required by 37 CFR 1.18(e). If patentee does not file a timely request for reconsideration of this patent term adjustment calculation including the information required by 37 CFR 1.705(b)(2) and the fee required by 37 CFR 1.18(e), the USPTO will issue a certificate of correction reflecting the PTA determination noted above.

Patentee should be aware that in order to preserve the right to review in the United States District Court for the District of Columbia of the USPTO patent term adjustment determination, patentee must ensure that he or she also take the steps required under 35 U.S.C. 154(b)(4)(A) in a timely manner. Nothing in the request for recalculation should be construed as providing an alternative time frame for commencing a civil action under 35 U.S.C. 154(b)(4)(A).

Any questions concerning this decision should be directed to the Office of Patent Legal Administration at 571-272-7702.

SPE RESPONSE FOR CERTIFICATE OF CORRECTION

Paper No.: _____

DATE : 1/07/09

TO SPE OF : ART UNIT 3753 (3700)

SUBJECT : Request for Certificate of Correction for Appl. No.: 10/526,934 Patent No.: 7,392,821

Attn: Kevin Lee

Please respond to this request for a certificate of correction within 7 days.

**FOR IFW FILES:**

Please review the requested changes/corrections as shown in the **COCIN** document(s) in the IFW application image. No new matter should be introduced, nor should the scope or meaning of the claims be changed.

Please complete the response (see below) and forward the completed response to scanning using document code **COCX**.

**FOR PAPER FILES:**

Please review the requested changes/corrections as shown in the attached certificate of correction. Please complete this form (see below) and forward it with the file to:

**Certificates of Correction Branch (C of C)**
**South Tower - 9A22**
**Palm Location 7580**

*ATTN: Ok to enter change to item (54) Title as requested in COCIN?

Ernest C. White, LIE
Certificates of Correction Branch
703-308-9390 ext.122

**Thank You For Your Assistance**

**The request for issuing the above-identified correction(s) is hereby:**
Note your decision on the appropriate box.

- [x] **Approved** — All changes apply.
- [ ] **Approved in Part** — Specify below which changes **do not** apply.
- [ ] **Denied** — State the reasons for denial below.

**Comments:** _____

GREGORY HUSON
SUPERVISORY PATENT EXAMINER
TECHNOLOGY CENTER 3700

## SPE RESPONSE FOR CERTIFICATE OF CORRECTION

GREGORY HUSON
SUPERVISORY PATENT EXAMINER
TECHNOLOGY CENTER 3700

SPE 3753 Art Unit

**UNITED STATES DEPARTMENT OF COMMERCE**
**Patent and Trademark Office**
ASSISTANT SECRETARY OF COMMERCE AND
COMMISSIONER OF PATENTS AND TRADEMARKS
Washington, DC 20231

4/2/09

Patent No. :7485764
Inventor(s) :Rath et al.
Issued :2/3/2009
Title : METHOD FOR THE PRODUCTION OF POLYISOBUENE
Atty.doc./File No.

Request for Certificates of Correction

Consideration has been given to your request for the issuance of a Certificate of Correction, for the above – identified patent under the provisions of CFR 1.322.

Inspection of the application for the patent reveals that item [30], is printed in accordance with the record and please show evidence of a priority document. Therefore being no fault on the Patent and Trademark Office, It has no authority to issue a certificate of correction under the provision of 1.322.

In view of the forgoing, your request in this matter, is hereby denied. However the remaining of the corrections will be corrected.

Future written correspondence concerning this matter should be filed and directed to Decisions & Certificates of Correction Branch.

Henry Randall
Mary Diggs
Decisions & Certificates
of Correction Branch
(703) 308-9390 Ext. 108

OBLON SPIVAK McClelland, Maier & Neustadt, P.C.
1940 Duke Street
Alexandria, VA 22314

HR/MD

## SPE RESPONSE FOR CERTIFICATE OF CORRECTION

Paper No.: _____

DATE : 4/24/09

TO SPE OF : ART UNIT 1797

SUBJECT : Request for Certificate of Correction for Appl. No.: 10/526936 Patent No.: 7485764

Please respond to this request for a certificate of correction within 7 days.

**FOR IFW FILES:**

Please review the requested changes/corrections as shown in the **COCIN** document(s) in the IFW application image. No new matter should be introduced, nor should the scope or meaning of the claims be changed.

Please complete the response (see below) and forward the completed response to scanning using document code **COCX**.

**FOR PAPER FILES:**

Please review the requested changes/corrections as shown in the attached certificate of correction. Please complete this form (see below) and forward it with the file to:

**Certificates of Correction Branch (CofC)**
**South Tower - 9A22**
**Palm Location 7580**

H. Riley

**Certificates of Correction Branch**
**703-308-9390 ext. _____**

**Thank You For Your Assistance**

**The request for issuing the above-identified correction(s) is hereby:**
Note your decision on the appropriate box.

| | |
|---|---|
| xxxx ☐ **Approved** | **All** changes apply. |
| ☐ **Approved in Part** | Specify below which changes **do not** apply. |
| ☐ **Denied** | State the reasons for denial below. |

**Comments:** Approved with the following changes

Please amend the C or Correction item (30) as follows to make consistent with priority data:

replace --- "102 43 576"---- with---- "102 43 576.6" "

/Glenn Caldarola/ — **SPE**

1797 — **Art Unit**

#3

UNITED STATES PATENT AND TRADEMARK OFFICE

13 DEC 2005

Commissioner for Patents
United States Patent and Trademark Office
P.O. Box 1450
Alexandria, VA 22313-1450
www.uspto.gov

Kevin M. Kercher
Blackwell Sanders Peper Martin LLP
720 Olive Street, 24th Floor
St. Louis, Missouri 63101

| | | |
|---|---|---|
| In re Application of | : | |
| BAKER, et al. | : | |
| Application No.: 10/526,942 | : | |
| PCT No.: PCT/US04/40409 | : | DECISION ON PETITION |
| Int. Filing Date: 02 December 2004 | : | UNDER 37 CFR 1.47(b) |
| Priority Date: 12 December 2003 | : | |
| Attorney Docket No.: 718452.9 | : | |
| For: URINARY TRANSFER SYSTEM AND ASSOCIATED METHOD OF USE | : | |

This decision is in response to applicants' "Petition under 37 C.F.R. Section 1.47(b) by Entity Having Proprietary Interest to File Application on Behalf of Inventor Who Refuses to Sign Declaration" filed 16 September 2005.

## BACKGROUND

On 02 December 2004, applicants filed international application PCT/US04/40409, which claimed a priority date of 12 December 2003. The international application listed Warren Spielman as an applicant/inventor and Larry R. Baker as a deceased inventor. A copy of the international application was communicated to the United States Patent and Trademark Office from the International Bureau on 07 July 2005. Pursuant to 37 CFR 1.495, the deadline for payment of the basic national fee in the United States is to expire 30 months from the priority date, 12 June 2006.

On 08 March 2005, applicants filed a transmittal for entry into the national stage in the United States, which accompanied by, inter alia: the requisite basic national fee as required by 35 U.S.C. 371(c)(1); a copy of the international application; and a preliminary amendment.

On 16 September 2005, applicants filed the present "Petition under 37 C.F.R. Section 1.47(b) by Entity Having Proprietary Interest to File Application on Behalf of Inventor Who Refuses to Sign Declaration."

On 25 October 2005, applicants filed "Letter for Express Request to Begin National Phase Proceedings."

## DISCUSSION

Section 409.03(c) of the Manual of Patent Examining Procedure (MPEP) states, in part:

> "37 CFR 1.47 should not be considered an alternative to 37 CFR 1.42 or 35 U.S.C. 117 since the language "cannot be found or reached after diligent effort" has no reasonable application to a deceased inventor. In re Application Papers Filed September 10, 1954, 108 USPQ 340 (Comm'r Pat. 1955). See 37 CFR 1.42 and MPEP § 409.01. However, 37 CFR 1.47 does apply where a known legal representative of a deceased inventor cannot be found or reached after diligent effort, or refuses to make application. In such cases, the last known address of the legal representative must be given (see MPEP § 409.03(e))."

Additionally, a petition under 37 CFR 1.47(b) must be accompanied by: (1) the requisite petition fee under 37 CFR 1.17(i); (2) factual proof that the inventor refuses to execute the application or cannot be reached after diligent effort; (3) a statement of the last known address of the nonsigning inventor; (4) an oath or declaration executed by the 37 CFR 1.47(b) applicant on behalf of and as agent for the nonsigning inventor; (5) proof of proprietary interest in the application; and, (6) a showing that such action is necessary to preserve the rights of the parties or to prevent irreparable damages. The 37 CFR 1.47(b) applicant has satisfied the requirements of items (1); (2); (3); (5) and (6). However, items and (4) has not been satisfied.

Regarding item (4) above, an oath or declaration executed by the 37 CFR 1.47(b) applicant on behalf of and as agent for the nonsigning inventor has not been submitted with the present petition. Additionally, the international application listed Larry R. Baker as a deceased inventor. In this case, a declaration executed by the legal representative (executor, administrator, etc.) on behalf of the deceased inventor (or by "all of his heirs" of the deceased inventor, where no legal representative has been appointed) is required. If the legal representative of the deceased inventor is unavailable or refuses to execute the application, a petition under 37 CFR 1.47 for the nonsigning legal representative is needed. (See 37 CFR 1.42 and 1.497(a)-(b))

For the reasons stated above, it would not be appropriate to accept the application without the signature of Warren Spielman under 37 CFR 1.47(a) at this time.

## CONCLUSION

The petition under 37 CFR 1.47(b) is **DISMISSED** without prejudice.

If reconsideration on the merits of this petition is desired, a proper response must be filed within **TWO (2) MONTHS** from the mail date of this decision. Any reconsideration request should include a cover letter entitled "Renewed Petition Under 37 CFR 1.47(b)." No additional petition fee is required.

Any further correspondence with respect to this matter should be addressed to: Mail Stop PCT, Commissioner for Patents, Office of PCT Legal Administration, P.O. Box 1450, Alexandria, Virginia 22313-1450, with the contents of the letter marked to the attention of the Office of PCT Legal Administration.

Anthony Smith
Attorney-Advisor
Office of PCT Legal Administration
Telephone: (571) 272-3298
Facsimile: (571) 273-0459

09 MAR 2006

UNITED STATES PATENT AND TRADEMARK OFFICE

Commissioner for Patents
United States Patent and Trademark Office
P.O. Box 1450
Alexandria, VA 22313-1450
www.uspto.gov

Kevin M. Kercher
Blackwell Sanders Peper Martin LLP
720 Olive Street, 24th Floor
St. Louis, Missouri 63101

| | |
|---|---|
| In re Application of<br>BAKER, et al.<br>Application No.: 10/526,942<br>PCT No.: PCT/US04/40409<br>Int. Filing Date: 02 December 2004<br>Priority Date: 12 December 2003<br>Attorney Docket No.: 718452.9<br>For: URINARY TRANSFER SYSTEM AND ASSOCIATED METHOD OF USE | DECISION ON PETITION UNDER 37 CFR 1.47(a) |

This decision is in response to applicants' "Renewed Petition under 37 C.F.R. Section 1.47(b)" filed 12 January 2006. Additionally, the declaration submitted on 12 January 2006 will be considered pursuant to 37 CFR 1.42.

Applicants' previous petition under 37 CFR 1.47(b) was dismissed because the petitioner did not provide a declaration in compliance with 37 CFR 1.47(a)-(b). Since the filing of the petition under 37 CFR 1.47(b), the representative of the deceased inventor has executed the declaration and the response to the Decision submitted 12 January 2006 will be treated as a petition under 37 CFR 1.47(a).

## BACKGROUND

On 02 December 2004, applicants filed international application PCT/US04/40409, which claimed a priority date of 12 December 2003. The international application listed Warren Spielman as an applicant/inventor and Larry R. Baker as a deceased inventor. A copy of the international application was communicated to the United States Patent and Trademark Office from the International Bureau on 07 July 2005. Pursuant to 37 CFR 1.495, the deadline for payment of the basic national fee in the United States is to expire 30 months from the priority date, 12 June 2006.

On 08 March 2005, applicants filed a transmittal for entry into the national stage in the United States, which accompanied by, inter alia: the requisite basic national fee as required by 35 U.S.C. 371(c)(1); a copy of the international application; and a preliminary amendment.

On 16 September 2005, applicants filed a "Petition under 37 C.F.R. Section 1.47(b) by Entity Having Proprietary Interest to File Application on Behalf of Inventor Who Refuses to Sign Declaration."

On 25 October 2005, applicants filed "Letter for Express Request to Begin National Phase Proceedings."

In a "Decision on Petition" dated 13 December 2005, applicants' petition under 37 CFR 1.47(b) was dismissed without prejudice.

On 12 January 2006, applicants filed "Renewed Petition under 37 CFR Section 1.47(b)" which is being treated as a Petition under 37 CFR 1.47(a).

## DISCUSSION

A petition under 37 CFR 1.47(a) must be accompanied by (1) the fee under 37 CFR 1.17(g), (2) factual proof that the missing joint inventor refuses to execute the application or cannot be reached after diligent effort, (3) a statement of the last known address of the missing inventor, and (4) an oath or declaration by each 37 CFR 1.47(a) applicant on his or her own behalf and behalf of the non-signing joint inventor. The 37 CFR 1.47(a) applicant has satisfied the requirements of items (1); (2); and (3). However, item (4) has not been satisfied.

Regarding item (4) above, an oath or declaration by each 37 CFR 1.47(a) applicant on his or her own behalf and behalf of the non-signing joint inventor has been submitted with the present petition, however, the declaration is not in compliance with 37 CFR 1.42 and 1.497(b)(2).

37 CFR 1.42 *When the Inventor is Dead*, states, in part:

> In case of the death of the inventor, the legal representative (executor, administrator, etc.) of the deceased inventor may make the necessary oath or declaration, and apply for and obtain the patent.

Section 409.01(a) of the Manual of Patent Examining Procedure (MPEP) states that the application can also be executed by "all of the heirs" of the deceased inventor, where no legal representative has been appointed.

The declaration filed 12 January 2006 is executed by the personal representative (James D. Baker) on behalf of deceased inventor, Larry R. Baker. However, the declaration does not state that James D. Baker is the "legal" representatives or are all of the heirs of the deceased inventor. Further, the declaration does not satisfy the requirements under 37 CFR 1.497(b)(2).

37 CFR 1.497(b)(2) states the following:

> (2) If the person making the oath or declaration or any supplemental

> oath or declaration is not the inventor (§§ 1.42, 1.43, or § 1.47) the oath or declaration shall state the relationship of the person to the inventor, and, upon information and belief, the facts which the inventor would have been required to state. If the person signing is the legal representative of a deceased inventor, the oath or declaration shall also state that the person is a legal representative and the citizenship, residence, and mailing address of the legal representative.

Pursuant to revised 37 CFR 1.497(b)(2), in addition to the citizenship and former residence and post office address of the deceased inventor referenced under 37 CFR 1.497(a)(3) and 37 CFR 1.63, the declaration must also provide name, residence, citizenship, and post office address for the legal representative. The declaration filed on 12 January 2006 does not include the last known post office address for the deceased inventor. Additionally, the declaration does not name the person executing the declaration on behalf of the deceased inventor. Accordingly, the declaration is not in compliance with 37 CFR 1.497(b)(2).

For the reasons stated above, it would not be appropriate to accept the application without the signature of Warren Spielman under 37 CFR 1.47(a) at this time.

## CONCLUSION

The petition under 37 CFR 1.47(a) is **DISMISSED** without prejudice.

If reconsideration on the merits of this petition is desired, a proper response must be filed within **TWO (2) MONTHS** from the mail date of this decision. Any reconsideration request should include a cover letter entitled "Renewed Petition Under 37 CFR 1.47(a)." No additional petition fee is required.

Any further correspondence with respect to this matter should be addressed to: Mail Stop PCT, Commissioner for Patents, Office of PCT Legal Administration, P.O. Box 1450, Alexandria, Virginia 22313-1450, with the contents of the letter marked to the attention of the Office of PCT Legal Administration.

Anthony Smith
Attorney-Advisor
Office of PCT Legal Administration
Telephone: (571) 272-3298
Facsimile: (571) 273-0459

27 JUN 2006

#1

UNITED STATES PATENT AND TRADEMARK OFFICE

Commissioner for Patents
United States Patent and Trademark Office
P.O. Box 1450
Alexandria, VA 22313-1450
www.uspto.gov

Kevin M. Kercher
Blackwell Sanders Peper Martin LLP
720 Olive Street, 24th Floor
St. Louis, Missouri 63101

| | | |
|---|---|---|
| In re Application of | : | |
| BAKER, et al. | : | |
| Application No.: 10/526,942 | : | |
| PCT No.: PCT/US04/40409 | : | DECISION ON PETITION |
| Int. Filing Date: 02 December 2004 | : | UNDER 37 CFR 1.47(a) |
| Priority Date: 12 December 2003 | : | |
| Attorney Docket No.: 718452.9 | : | |
| For: URINARY TRANSFER SYSTEM AND ASSOCIATED METHOD OF USE | : | |

This decision is issued in response to applicants' "Renewed Petition under 37 C.F.R. 1.47(a)" filed 10 May 2006. Additionally, the declaration submitted on 10 May 2006 will be considered pursuant to 37 CFR 1.42.

## BACKGROUND

On 02 December 2004, applicants filed international application PCT/US04/40409, which claimed a priority date of 12 December 2003. The international application listed Warren Spielman as an applicant/inventor and Larry R. Baker as a deceased inventor. A copy of the international application was communicated to the United States Patent and Trademark Office from the International Bureau on 07 July 2005. Pursuant to 37 CFR 1.495, the deadline for payment of the basic national fee in the United States is to expire 30 months from the priority date, 12 June 2006.

On 08 March 2005, applicants filed a transmittal for entry into the national stage in the United States, which accompanied by, inter alia: the requisite basic national fee as required by 35 U.S.C. 371(c)(1); a copy of the international application; and a preliminary amendment.

On 16 September 2005, applicants filed a "Petition under 37 C.F.R. Section 1.47(b) by Entity Having Proprietary Interest to File Application on Behalf of Inventor Who Refuses to Sign Declaration."

On 25 October 2005, applicants filed "Letter for Express Request to Begin National Phase Proceedings."

In a "Decision on Petition" dated 13 December 2005, applicants' petition under 37 CFR 1.47(b) was dismissed without prejudice.

On 12 January 2006, applicants filed "Renewed Petition under 37 CFR Section 1.47(b)" which was treated as a Petition under 37 CFR 1.47(a). In a "Decision on Petition" dated 09 March 2006, applicants' petition under 37 CFR 1.47(a) was dismissed without prejudice.

On 10 May 2006, applicants' filed a "Renewed Petition under 37 C.F.R. 1.47(a)."

## DISCUSSION

A petition under 37 CFR 1.47(a) must be accompanied by (1) the fee under 37 CFR 1.17(g), (2) factual proof that the missing joint inventor refuses to execute the application or cannot be reached after diligent effort, (3) a statement of the last known address of the missing inventor, and (4) an oath or declaration by each 37 CFR 1.47(a) applicant on his or her own behalf and behalf of the non-signing joint inventor. The 37 CFR 1.47(a) applicant has satisfied the requirements of items (1); (2); and (3). However, item (4) has not been satisfied.

Regarding item (4) above, an oath or declaration by each 37 CFR 1.47(a) applicant on his or her own behalf and behalf of the non-signing joint inventor has been submitted with the present petition, however, the declaration is not in compliance with 37 CFR 1.42 and 1.497(b)(2).

37 CFR 1.42 *When the Inventor is Dead*, states, in part:

> In case of the death of the inventor, the legal representative (executor, administrator, etc.) of the deceased inventor may make the necessary oath or declaration, and apply for and obtain the patent.

The declaration submitted on 10 May 2006 appears to have been executed by the proper party under 37 CFR 1.42, however, the declaration does not satisfy the requirements under 37 CFR 1.497(b)(2).

37 CFR 1.497(b)(2) states the following:

> (2) If the person making the oath or declaration or any supplemental oath or declaration is not the inventor (§§ 1.42, 1.43, or § 1.47) the oath or declaration shall state the relationship of the person to the inventor, and, upon information and belief, the facts which the inventor would have been required to state. If the person signing is the legal representative of a deceased inventor, the oath or declaration shall also state that the person is a legal representative and the citizenship, residence, and mailing address of the legal representative.

Pursuant to revised 37 CFR 1.497(b)(2), in addition to the citizenship and former residence and post office address of the deceased inventor referenced under 37 CFR 1.497(a)(3) and 37 CFR 1.63, the declaration must also provide name, residence, citizenship, and post office address for the legal representative. The declaration filed on 10 May 2006 provides the citizenship for only one individual and it is unclear whether this information is for the legal representative or the deceased inventor. Accordingly, the declaration is not in compliance with 37 CFR 1.497(a)-(b).

For the reasons stated above, it would not be appropriate to accept the application without the signature of Warren Spielman under 37 CFR 1.47(a) at this time.

## CONCLUSION

The petition under 37 CFR 1.47(a) is **DISMISSED** without prejudice.

If reconsideration on the merits of this petition is desired, a proper response must be filed within **TWO (2) MONTHS** from the mail date of this decision. Any reconsideration request should include a cover letter entitled "Renewed Petition Under 37 CFR 1.47(a)." No additional petition fee is required.

Any further correspondence with respect to this matter should be addressed to: Mail Stop PCT, Commissioner for Patents, Office of PCT Legal Administration, P.O. Box 1450, Alexandria, Virginia 22313-1450, with the contents of the letter marked to the attention of the Office of PCT Legal Administration.

Anthony Smith

Anthony Smith
Attorney-Advisor
Office of PCT Legal Administration
Telephone: (571) 272-3298
Facsimile: (571) 273-0459

#10

UNITED STATES PATENT AND TRADEMARK OFFICE

Commissioner for Patents
United States Patent and Trademark Office
P.O. Box 1450
Alexandria, VA 22313-1450
www.uspto.gov

02 AUG 2006

Kevin M. Kercher
Blackwell Sanders Peper Martin LLP
720 Olive Street, 24th Floor
St. Louis, Missouri 63101

| | |
|---|---|
| In re Application of<br>BAKER, et al.<br>Application No.: 10/526,942<br>PCT No.: PCT/US04/40409<br>Int. Filing Date: 02 December 2004<br>Priority Date: 12 December 2003<br>Attorney Docket No.: 718452.9<br>For: URINARY TRANSFER SYSTEM AND ASSOCIATED METHOD OF USE | DECISION ON PETITION UNDER 37 CFR 1.47(a) |

This decision is issued in response to applicants' "Renewed Petition under 37 C.F.R. 1.47(a)" filed 12 July 2006.

## BACKGROUND

On 02 December 2004, applicants filed international application PCT/US04/40409, which claimed a priority date of 12 December 2003. The international application listed Warren Spielman as an applicant/inventor and Larry R. Baker as a deceased inventor. A copy of the international application was communicated to the United States Patent and Trademark Office from the International Bureau on 07 July 2005. Pursuant to 37 CFR 1.495, the deadline for payment of the basic national fee in the United States is to expire 30 months from the priority date, 12 June 2006.

On 08 March 2005, applicants filed a transmittal for entry into the national stage in the United States, which accompanied by, inter alia: the requisite basic national fee as required by 35 U.S.C. 371(c)(1); a copy of the international application; and a preliminary amendment.

On 16 September 2005, applicants filed a "Petition under 37 C.F.R. Section 1.47(b) by Entity Having Proprietary Interest to File Application on Behalf of Inventor Who Refuses to Sign Declaration."

On 25 October 2005, applicants filed "Letter for Express Request to Begin National Phase Proceedings."

In a "Decision on Petition" dated 13 December 2005, applicants' petition under 37 CFR 1.47(b) was dismissed without prejudice.

On 12 January 2006, applicants filed "Renewed Petition under 37 CFR Section

1.47(b)" which was treated as a Petition under 37 CFR 1.47(a). In a "Decision on Petition" dated 09 March 2006, applicants' petition under 37 CFR 1.47(a) was dismissed without prejudice.

On 10 May 2006, applicants' filed a "Renewed Petition under 37 C.F.R. 1.47(a)." In a "Decision on Petition" dated 27 June 2006, applicants' petition under 37 CFR 1.47(a) was dismissed without prejudice.

On 12 July 2006, applicants' filed a "Renewed Petition under 37 C.F.R. 1.47(a)."

## DISCUSSION

A petition under 37 CFR 1.47(a) must be accompanied by (1) the fee under 37 CFR 1.17(g), (2) factual proof that the missing joint inventor refuses to execute the application or cannot be reached after diligent effort, (3) a statement of the last known address of the missing inventor, and (4) an oath or declaration by each 37 CFR 1.47(a) applicant on his or her own behalf and behalf of the non-signing joint inventor. The 37 CFR 1.47(a) applicant has satisfied the requirements of items (1)-(3).

As to item (4), the declaration submitted 12 January 2006 taken in combination with the declaration submitted on 10 May 2006 fulfills the requirements of 37 CFR 1.42 and complies with 37 CFR 1.497(a)-(b). Accordingly, the requirements for entry into national stage under 35 U.S.C. 371(c) were completed as of 10 May 2006.

For the reasons stated above, it would not be appropriate to accept the application without the signature of Warren Spielman under 37 CFR 1.47(a) at this time.

## CONCLUSION

The renewed petition under 37 CFR 1.47(a) is **GRANTED**. The papers filed under 37 CFR 1.42 are **ACCEPTED**. The application will be given an international filing date of 02 December 2004 under 35 U.S.C. 363, and a date of **10 May 2006** under 35 U.S.C. 371(c).

As provided in 37 CFR 1.47(a), a notice of the filing of this application will be forwarded to the nonsigning inventor at his last known address of record. A notice of the filing of the application under 37 CFR 1.47(a) will be published in the Official Gazette.

This application is being returned to the United States Designated/Elected Office for processing in accordance with this decision.

Anthony Smith

Anthony Smith
Attorney-Advisor
Office of PCT Legal Administration
Telephone: (571) 272-3298
Facsimile: (571) 273-0459

UNITED STATES PATENT AND TRADEMARK OFFICE

Commissioner for Patents
United States Patent and Trademark Office
P.O. Box 1450
Alexandria, VA 22313-1450
www.uspto.gov

02 AUG 2006

Warren Spielman
7301 Overbrook Drive
St. Louis, Missouri 63121

In re Application of
BAKER, et al.
Application No.: 10/526,942
PCT No.: PCT/US04/40409
Int. Filing Date: 02 December 2004
Priority Date: 12 December 2003
Attorney Docket No.: 718452.9
For: URINARY TRANSFER SYSTEM AND ASSOCIATED METHOD OF USE

Dear Warren Spielman :

You are named as an inventor in the above identified United States patent application, filed under the provisions of 37 CFR 1.47(a) and 35 U.S.C. 116. Should a patent be granted, you will be designated as an inventor.

As a named inventor, you are entitled to inspect any paper in the file wrapper of the application, order copies of all or any part thereof (at a prepaid cost per 37 CFR 1.19) or to make your position of record in the application. Alternatively, you may arrange to do any of the preceding through a registered patent agent or attorney presenting written authorization from you. If you care to join in the application, counsel of record (see below) would presumably assist you. Joining in the application would entail the filing of an appropriate oath or declaration by you pursuant to 37 CFR 1.63.

Anthony Smith

Anthony Smith
Attorney-Advisor
Office of PCT Legal Administration
Telephone: (571) 272-3298
Facsimile: (571) 273-0459

Counsel of Record:
Kevin M. Kercher
Blackwell Sanders Peper Martin LLP
720 Olive Street, 24th Floor
St. Louis, Missouri 63101

UNITED STATES PATENT AND TRADEMARK OFFICE

Commissioner for Patents
United States Patent and Trademark Office
P.O. Box 1450
Alexandria, VA 22313-1450
www.uspto.gov

LOREN G. HELMREICH
5718 WESTHEIMER
SUITE 1800
HOUSTON TX 77057

COPY MAILED

APR 0 7 2008

OFFICE OF PETITIONS

| | | |
|---|---|---|
| In re Application of | : | |
| Lionel J. Milberger | : | |
| Application No. 10/526,947 | : | DECISION GRANTING PETITION |
| Filed: March 8, 2005 | : | UNDER 37 CFR 1.137(b) |
| Attorney Docket No. DQIP-141 | : | |

This is a decision on the petition under 37 CFR 1.137(b), filed August 2, 2007, to revive the above-identified application.

The petition is **GRANTED**.

The petition satisfies the conditions for revival pursuant to the provisions of 37 CFR 1.137(b) in that (1) the reply in the form of an amendment; (2) the petition fee; and (3) the required statement of unintentional delay have been received. Accordingly, the reply to the Restriction Requirement mailed December 28, 2006, is accepted as having been unintentionally delayed.

Telephone inquiries concerning this decision should be directed to the undersigned at (571) 272-3208.

This matter is being referred to Technology Center AU

Karen Creasy

Karen Creasy
Petitions Examiner
Office of Petitions

2 5 JUN 2007

UNITED STATES PATENT AND TRADEMARK OFFICE

Commissioner for Patents
United States Patent and Trademark Office
P.O. Box 1450
Alexandria, VA 22313-1450
www.uspto.gov

ECKERT SEAMANS CHERIN & MELLOTT
600 GRANT STREET
44TH FLOOR
PITTSBURGH PA 15219

| | | |
|---|---|---|
| In re Application of | : | |
| BLEVINS, Joseph, S., Sr. | : | |
| Application No.: 10/526,951 | : | DECISION |
| PCT No.: PCT/US2003/028149 | : | |
| Int. Filing Date: 09 September 2003 | : | |
| Priority Date: 10 September 2002 | : | |
| Attorney Docket No.: 283359-00360-3 | : | |
| For: HOT STANDBY METHOD AND APPARATUS | : | |

This decision is in response to applicant's "REQUEST FOR REFUND" filed in the United States Patent and Trademark Office (USPTO) on 27 March 2006.

## BACKGROUND

On 09 September 2003, applicant filed international application PCT/US2003/028149, which designated the U.S. and claimed a priority date of 10 September 2002. A copy of the international application was communicated to the USPTO from the International Bureau on 25 March 2004. The thirty-month period for paying the basic national fee in the United States expired at midnight on 10 March 2005.

On 08 March 2005, applicant filed, *inter alia*, a submission for entry into the national stage in the United States which was accompanied by, *inter alia*, the U.S. Basic National Fee and an authorization to charge any additional fees which may be required to Deposit Account 02-2556.

On 27 March 2006, applicant filed the instant "REQUEST FOR REFUND".

## DISCUSSION

The request for refund requests a refund of the fees charged to Deposit Account 02-2556 on 13 February 2006. A review of the application file indicates that this charge was made in error. The $250 charged on this date for fifty sheets in excess of 100 has been credited to Deposit Account 02-2556.

**CONCLUSION**

The request for refund under 37 CFR 1.26 is **GRANTED** for the reasons set forth above.

Daniel Stemmer
Legal Examiner
PCT Legal Affairs
Office of Patent Cooperation Treaty
Legal Administration
Telephone: (571) 272-3301
Facsimile: (571) 273-0459

UNITED STATES PATENT AND TRADEMARK OFFICE

UNITED STATES DEPARTMENT OF COMMERCE
United States Patent and Trademark Office
Address: COMMISSIONER FOR PATENTS
P.O. Box 1450
Alexandria, Virginia 22313-1450
www.uspto.gov

JACOBSON HOLMAN PLLC
400 SEVENTH STREET N.W.
SUITE 600
WASHINGTON, DC 20004

Mail Date: 05/03/2010

| | | |
|---|---|---|
| **Applicant** | : Philip Summersgill | : DECISION ON REQUEST FOR |
| **Patent Number** | : 7605002 | : RECALCULATION of PATENT |
| **Issue Date** | : 10/20/2009 | : TERM ADJUSTMENT IN VIEW |
| **Application No** | : 10/526,981 | : OF WYETH |
| **Filed** | : 06/07/2005 | : |
| | | : |

The Patentee's Request for Recalculation is **DISMISSED.**

This Request is deemed ineligible for consideration for one or more of the following reasons:

(A). The patent for which PTA recalculation is requested is either a design or reissue application or is a reexamination proceeding;

(B). The patent for which PTA recalculation is requested resulted from a utility or plant application filed under 35 USC 111(a) before May 29, 2000 and no CPA filed in the application on/after May 29, 2000;

(C). The patent for which PTA recalculation is requested resulted from an international application in which the international filing date was before May 29, 2000 and no CPA filed in the application on/after May 29, 2000;

(D). The patent for which PTA recalculation is requested issued on/after March 2, 2010;

(E). The Request for Recalculation was filed more than 180 days after the grant date of the patent and the request was not filed within two months of a dismissal of a request for reconsideration of the of the patent term under 37 CFR 1.705(d);

(F). The Request for Recalculation is not solely limited to USPTO pre-Wyeth interpretation of 35 U.S.C. 154(b)(2)(A);

or

(G). A civil action was filed pursuant to 35 U.S.C. 154(b)(4)(A)concerning the same patent at issue in this request.

Patentee may file a reply to this decision dismissing the Request for Recalculation. Patentee must file such reply within one month or thirty days, whichever is longer, of the mail date of the decision dismissing the Request for Recalculation. No fee is required if patentee is asserting in the reply that the dismissal for ineligibility is improper.

Patentee should use document code PET.OP if electronically filing a reply to this dismissal. If the USPTO finds that the request was improperly deemed ineligible, the USPTO will mail applicant a recalculation determination.

Patentee should be aware that in order to preserve the right to review in the United States District Court for the District of Columbia of the USPTO patent term adjustment determination, patentee must ensure that he or she also take the steps required under 35 U.S.C. 154(b)(4)(A). Nothing in the request for recalculation should be construed as providing an alternative time frame for commencing a civil action under 35 U.S.C. 154 (b)(4)(A).

Any questions concerning this decision should be directed to the Office of Patent Legal Administration at 571-272-7702.

UNITED STATES PATENT AND TRADEMARK OFFICE

UNITED STATES DEPARTMENT OF COMMERCE
United States Patent and Trademark Office
Address: COMMISSIONER FOR PATENTS
P.O. Box 1450
Alexandria, Virginia 22313-1450
www.uspto.gov

WOOD, HERRON & EVANS, LLP
2700 CAREW TOWER
441 VINE STREET
CINCINNATI, OH 45202

Mail Date: 04/27/2010

| | | |
|---|---|---|
| **Applicant** | : Hideo Shidara | : DECISION ON REQUEST FOR |
| **Patent Number** | : 7637207 | : RECALCULATION of PATENT |
| **Issue Date** | : 12/29/2009 | : TERM ADJUSTMENT IN VIEW |
| **Application No** | : 10/526,988 | : OF WYETH AND NOTICE OF INTENT TO |
| **Filed** | : 03/07/2005 | : ISSUE CERTIFICATE OF CORRECTION |
| | | : |

The Request for Recalculation is **GRANTED** to the extent indicated.

The patent term adjustment has been determined to be **1305** days. The USPTO will *sua sponte* issue a certificate of correction reflecting the amount of PTA days determined by the recalculation.

Prior to the issuance of the certificate of correction, the USPTO will afford patentee an opportunity to be heard and request reconsideration. Accordingly, patentee has **one month or thirty (30) days**, whichever is longer, to file a request for reconsideration of this patent term adjustment calculation. See 35 U.S.C. 154(b)(3)(B)(ii) and 37 CFR 1.322(a)(4). No extensions of time will be granted under 37 CFR 1.136.

Patentee should use document code PET.OP if electronically filing a request for reconsideration of this patent term adjustment calculation. The patentee must also include the information required by 37 CFR 1.705(b)(2) and the fee required by 37 CFR 1.18(e). If patentee does not file a timely request for reconsideration of this patent term adjustment calculation including the information required by 37 CFR 1.705(b)(2) and the fee required by 37 CFR 1.18(e), the USPTO will issue a certificate of correction reflecting the PTA determination noted above.

Patentee should be aware that in order to preserve the right to review in the United States District Court for the District of Columbia of the USPTO patent term adjustment determination, patentee must ensure that he or she also take the steps required under 35 U.S.C. 154(b)(4)(A) in a timely manner. Nothing in the request for recalculation should be construed as providing an alternative time frame for commencing a civil action under 35 U.S.C. 154(b)(4)(A).

Any questions concerning this decision should be directed to the Office of Patent Legal Administration at 571-272-7702.

16 AUG 2005

United States Patent and Trademark Office

Commissioner for Patents
United States Patent and Trademark Office
P.O. Box 1450
Alexandria, VA 22313-1450
www.uspto.gov

Fulbright & Jaworski, L.L.P.
600 Congress Avenue
Suite 2400
Austin, TX 78701

| | | |
|---|---|---|
| In re Application of | : | |
| Kubin et al. | : | |
| Application No. 10/527,016 | : | |
| PCT No.: PCT/AT01/00159 | : | |
| Int. Filing Date: 21 May 2001 | : | COMMUNICATION |
| Priority Date: 23 May 2000 | : | |
| Atty. Docket No.: SONN:067US | : | |
| For: Novel Preparation Of Hypericin | : | |
| Bonded With Poly-N-Vinylamides | : | |

This is in response to the petition under 37 CFR 1.137(b) filed on 07 March 2005.

## BACKGROUND

This international application was filed on 21 May 2001, claimed an earlier priority date of 23 May 2000, and designated the U.S. The International Bureau transmitted a copy of the published international application to the USPTO on 29 November 2001. A Demand electing the United States was filed prior to the elapse of 19 months from the priority date. The 30 month time period for paying the basic national fee in the United States expired at midnight on 23 November 2002. This international application became abandoned with respect to the national stage in the United States under 35 U.S.C. 371 for failure to timely pay the basic national fee.

## DISCUSSION

A grantable petition to revive an abandoned application under 37 CFR 1.137(b) must be accompanied by (1) the required reply, unless previously filed; (2) the petition fee as set forth in § 1.17(m); (3) a statement that the entire delay in filing the required reply from the due date for the reply until the filing of a grantable petition pursuant to this paragraph was unintentional. The Commissioner may require additional information where there is a question whether the delay was unintentional; and (4) any terminal disclaimer (and fee as set forth in § 1.20 (d)) required pursuant to paragraph (c) of this section.

Regarding requirement (1), the required reply in the form of the $150.00 basic national fee is being charged to counsel's Deposit Account No. 50-1212, as authorized by the "Preliminary Amendment" filed on 07 March 2005.

Regarding requirement (2), the petition fee accompanied the petition.

Regarding requirement (3), the petition includes a statement that "The entire delay from November 23, 2002, until the filing of the Petition Under 37 C.F.R. § 1.137(b) and United States application filed pursuant to 35 U.S.C. §371(c) submitted herewith was unintentional, for the

reasons set forth below." However, the petition and the statements contained within it were made only by one of the joint inventors (Andreas Kubin) and his representative. There is no statement by either the other joint inventor (Hans Gunther Loew) or a representative of Mr. Loew as to whether Mr. Loew's actions constitute "unintentional delay" during the period from the due date for the reply until the filing of a grantable petition pursuant to 37 CFR 1.137(b). Counsel must furnish either a statement from Mr. Loew or his duly appointed representative that the delay was in fact unintentional, or else a power of attorney executed by Mr. Loew in favor of present counsel. For these reasons, requirement (3) has not been satisfied.

Regarding requirement (4), no terminal disclaimer is required because the international filing date of this application is later than 8 June 1995.

It is noted that the declaration of the inventors filed on 07 March 2005 does not comply with 37 CFR 1.497(a) and (b) because it is not signed by joint inventor Hans Gunther Loew.

## DECISION

The petition under 37 CFR 1.137(b) is **DISMISSED**, without prejudice.

If reconsideration on the merits of this petition is desired, a proper response must be filed within **TWO (2) MONTHS** from the mail date of this decision. Extensions of time may be obtained under 37 CFR 1.136(a).

Please direct any further correspondence with respect to this matter to the Assistant Commissioner for Patents, Mail Stop PCT, P.O. Box 1450, Alexandria, VA 22313-1450, and address the contents of the letter to the attention of the PCT Legal Office.

Leonard Smith
PCT Legal Examiner
PCT Legal Office

George M. Dombroske
PCT Legal Examiner
PCT Legal Office
Tel: (571) 272-3283
Fax: (571) 273-0459

29 SEP 2005

United States Patent and Trademark Office

#5

Commissioner for Patents
United States Patent and Trademark Office
P.O. Box 1450
Alexandria, VA 22313-1450
www.uspto.gov

Fulbright & Jaworski, L.L.P.
600 Congress Avenue
Suite 2400
Austin, TX 78701

| | | |
|---|---|---|
| In re Application of | : | |
| Kubin et al. | : | |
| Application No. 10/527,016 | : | |
| PCT No.: PCT/AT01/00159 | : | |
| Int. Filing Date: 21 May 2001 | : | COMMUNICATION |
| Priority Date: 23 May 2000 | : | |
| Atty. Docket No.: SONN:067US | : | |
| For: Novel Preparation Of Hypericin | : | |
| Bonded With Poly-N-Vinylamides | : | |

This is in response to the renewed petition under 37 CFR 1.137(b) filed on 08 September 2005.

## DISCUSSION

In a decision mailed on 16 August 2005, the petition under 37 CFR 1.137(b) filed on 07 March 2005 was dismissed without prejudice because

> Regarding requirement (3), the petition includes a statement that "The entire delay from November 23, 2002, until the filing of the Petition Under 37 C.F.R. § 1.137(b) and United States application filed pursuant to 35 U.S.C. §371(c) submitted herewith was unintentional, for the reasons set forth below." However, the petition and the statements contained within it were made only by one of the joint inventors (Andreas Kubin) and his representative. There is no statement by either the other joint inventor (Hans Gunther Loew) or a representative of Mr. Loew as to whether Mr. Loew's actions constitute "unintentional delay" during the period from the due date for the reply until the filing of a grantable petition pursuant to 37 CFR 1.137(b). Counsel must furnish either a statement from Mr. Loew or his duly appointed representative that the delay was in fact unintentional, or else a power of attorney executed by Mr. Loew in favor of present counsel. For these reasons, requirement (3) has not been satisfied.
>
> It is noted that the declaration of the inventors filed on 07 March 2005 does not comply with 37 CFR 1.497(a) and (b) because it is not signed by joint inventor Hans Gunther Loew.

In response, petitioner has provided a "Declaration In Support Of Petition..." signed by both of the inventors and describing the circumstances under which this application became abandoned with respect to the national stage in the United States, even though "at all times we intended for the application to be nationalized into the United States." The inventors state that "The entire delay from November 23, 2002, until the filing of the Petition Under 37 C.F.R. §1.137(b) and United States application filed pursuant to 35 U.S.C. §371(c) submitted herewith was unintentional, for the reasons set forth below." This is being construed as a statement that

"the entire delay in filing the required reply from the due date for the reply until the filing of a grantable petition pursuant to 37 CFR 1.137(b) was unintentional." Petitioner must notify the Patent and Trademark Office if such an interpretation of the statement in the petition is not correct. Thus, the statement in the petition is being accepted in satisfaction of 37 CFR 1.137(b)(3).

Petitioner has filed a new declaration and power of attorney signed by both of the joint inventors and appointing present counsel. However, this declaration is not in compliance with 37 CFR 1.497(a)(2) because the application number to which it is directed was recorded by counsel after it was signed by the inventors.

## DECISION

The petition under 37 CFR 1.137(b) is **GRANTED**.

This application is being forwarded to the National Stage Processing Branch for further processing including the preparation and mailing of a Notification of Missing Requirements (Form PCT/DO/EO/905) requiring the submission of an oath or declaration compliant with 37 CFR 1.497(a) and (b) and a surcharge under 37 CFR 1.492(h).

Richard Cole
PCT Legal Examiner
PCT Legal Office

George M. Dombroske
PCT Legal Examiner
PCT Legal Office
Tel: (571) 272-3283
Fax: (571) 273-0459

United States Patent and Trademark Office

Commissioner for Patents
United States Patent and Trademark Office
P.O. Box 1450
Alexandria, VA 22313-1450
www.uspto.gov

BARNES & THORNBURG LLP
P.O. BOX 2786
CHICAGO, IL 60690-2786

14 MAY 2007

| | | |
|---|---|---|
| In re Application of | : | |
| Warner | : | |
| Application No.: 10/527,046 | : | DECISION |
| PCT No.: PCT/GB03/03895 | : | |
| Int. Filing Date: 09 September 2003 | : | ON |
| Priority Date: 13 September 2002 | : | |
| Attorney Docket No.: 920602-98737 | : | PETITION |
| For: Construction Kit | : | |

This is a decision on applicants' renewed petition under 37 CFR 1.181 filed on 05 April 2007.

## DISCUSSION

In a Decision mailed on 05 March 2007, the petition to withdraw the holding of abandonment filed on 08 May 2006 was dismissed without prejudice because

> With respect to requirement (2), petitioner states in part that "Appended hereto is a copy of the docket entries of the firm of the undersigned showing base dates (PTO action dates) of July 22, 2005. Had the Notification of Missing Requirements been received, it would have been docketed for a response deadline of September 22, 2005. As can be seen, there is no information regarding this application (file number 920602-98737) because the Notification of Missing Requirements was never received." Though this statement arguably implies that the docket records were inspected, the petition does not include an explicit statement that a search of both the file jacket and docket records indicates that the Office action was not received. Such a statement should be made by a person having first-hand knowledge of the facts involved (i.e., by the person who conducted the search). Therefore, requirement (2) has not been satisfied at this time.
>
> Concerning requirement (3), the instant petition is accompanied by sheets which petitioner characterizes as "docket entries of the firm of the undersigned showing base dates (PTO action dates) of July 22, 2005." However, the required docket records are those records showing all applications docketed for responses due on 22 September 2005, not just applications in which the USPTO mailed correspondence on 22 July 2005 (ideally, such records would include a "tickler sheet" listing all of the application or docket numbers with responses due on 22 September 2005). The submitted docket sheets do not clearly satisfy requirement (3).

In response, petitioner now states that "a search of both the file of this office and the docket records indicates that the Office Action was not received." This statement is being accepted in satisfaction of requirement (2).

Regarding requirement (3), petitioner characterizes the docket records filed on "September 9, 2003" (taken to refer to the records accompanying the previous petition) as

> docket records of the firm of the undersigned having deadlines of September 22, 2005. While a "tickler sheet" could have been generated if that "tickler sheet" were prepared prior to September 22, 2005, the docket system of the firm of the undersigned does not allow an *ex parte facto* generation of any such sheet. Thus, instead although equivalently, the records submitted to the Patent and Trademark Office contain all docket entries of the firm of the undersigned having PTO action dates (that is, mailing dates by the PTO) of July 22, 2005. Had the Notice of Missing Requirements of July 22, 2005 for this application been received, one of the records would have shown that, but as the Patent and Trademark Office can see, there is no such attachment to the Petition because no such notification was ever received from the Patent and Trademark Office. What has been provided to the Patent and Trademark Office is clearly the docket record of the firm of the undersigned where the non-received paper would have been entered had it been received.

Though counsel states that the submitted sheets are in fact "the docket record of the firm," and that the requested "tickler sheet" can no longer be generated, it is not clear how the submitted sheets were generated (and therefore, it is not clear that they should be accepted as a record of all of the cases docketed for reply on 22 September 2005). That is, was petitioner working from a list of all cases having a "Base Date" of 22 July 2005 and, if so, why has that list not been furnished? An additional concern is that, in compiling the submission, petitioner may inadvertently have overlooked other cases with the same "Base Date" or otherwise docketed for reply on 22 September 2005. For these reasons, it would not be appropriate to conclude that requirement (3) has been satisfied at this time.

## CONCLUSION

The petition to withdraw the holding of abandonment is **DISMISSED**, without prejudice.

If reconsideration on the merits of this petition is desired, a proper response must be filed within **TWO (2) MONTHS** from the mail date of this decision. Any reconsideration request should include be entitled "Renewed Petition Under 37 CFR 1.181."

Please direct any further correspondence with respect to this matter to the Assistant Commissioner for Patents, Mail Stop PCT, P.O. Box 1450, Alexandria, VA 22313-1450, and address the correspondence to the attention of the Office of PCT Legal Administration.

George Dombroske
PCT Legal Examiner
Office of PCT Legal Administration
Tel: (571) 272-3283
Fax: (571) 273-0459

United States Patent and Trademark Office

Commissioner for Patents
United States Patent and Trademark Office
P.O. Box 1450
Alexandria, VA 22313-1450
www.uspto.gov

BARNES & THORNBURG LLP
P.O. BOX 2786
CHICAGO, IL 60690-2786

25 JUN 2007

| | | |
|---|---|---|
| In re Application of | : | |
| Warner | : | |
| Application No.: 10/527,046 | : | DECISION |
| PCT No.: PCT/GB03/03895 | : | |
| Int. Filing Date: 09 September 2003 | : | ON |
| Priority Date: 13 September 2002 | : | |
| Attorney Docket No.: 920602-98737 | : | PETITION |
| For: Construction Kit | : | |

This is a decision on applicants' renewed petition under 37 CFR 1.181 filed on 23 May 2007.

## DISCUSSION

In a Decision mailed on 14 May 2007, the renewed petition to withdraw the holding of abandonment filed on 05 April 2007 was dismissed without prejudice because

> Though counsel states that the submitted sheets are in fact "the docket record of the firm," and that the requested "tickler sheet" can no longer be generated, it is not clear how the submitted sheets were generated (and therefore, it is not clear that they should be accepted as a record of all of the cases docketed for reply on 22 September 2005). That is, was petitioner working from a list of all cases having a "Base Date" of 22 July 2005 and, if so, why has that list not been furnished? An additional concern is that, in compiling the submission, petitioner may inadvertently have overlooked other cases with the same "Base Date" or otherwise docketed for reply on 22 September 2005. For these reasons, it would not be appropriate to conclude that requirement (3) has been satisfied at this time.

In response, petitioner states that

> The records previously provided to the Patent and Trademark Office were all those U.S. matters having an indicated date of September 22, 2005 and a base date of July 22, 2005. Those provided were all of the records of the firm of the undersigned having a base date of July 22, 2005 no matter when the final due date may have been. No cases were overlooked, and all U.S. cases having a July 22, 2005 base date (that is, of mailing by the Patent and Trademark office) have been included. As can be seen, there is no record for this application because no Notification of Missing Requirements was ever received.
>
> So that there is no question, also submitted herewith is the record of all matters (not just U.S.) having the base date of July 22, 2005. The first sheet is a summary of the following 28 sheets. Again, as would be expected since the PTO has seen all U.S. matters, there is no record for this application.

Upon consideration of the totality of the evidence of record, including the docket records accompanying the instant renewed petition as well as petitioner's arguments, it would be

appropriate to conclude that requirement (3) has now been satisfied. Therefore, the Notification of Abandonment (Form PCT/DO/EO/909) mailed on 26 April 2006 is hereby **VACATED**.

## CONCLUSION

The petition to withdraw the holding of abandonment is **GRANTED**.

This application is being forwarded to the National Stage Processing Branch for further processing. The date of this application under 35 U.S.C. 371(c)(1), (2) and (4) is **08 May 2006**.

George Dombroske
PCT Legal Examiner
Office of PCT Legal Administration
Tel: (571) 272-3283
Fax: (571) 273-0459

0 5 MAR 2007

United States Patent and Trademark Office

#7

Commissioner for Patents
United States Patent and Trademark Office
P.O. Box 1450
Alexandria, VA 22313-1450
www.uspto.gov

BARNES & THORNBURG LLP
P.O. BOX 2786
CHICAGO, IL 60690-2786

| | | |
|---|---|---|
| In re Application of | : | |
| Warner | : | |
| Application No.: 10/527,046 | : | DECISION |
| PCT No.: PCT/GB03/03895 | : | |
| Int. Filing Date: 09 September 2003 | : | ON |
| Priority Date: 13 September 2002 | : | |
| Attorney Docket No.: 920602-98737 | : | PETITION |
| For: Construction Kit | : | |

This is a decision on applicants' "Petition To Withdraw Holding Of Abandonment..." filed on 08 May 2006.

## BACKGROUND

This international application was filed on 09 September 2003, claimed a priority date of 13 September 2002, and designated the United States. The International Bureau transmitted a copy of the published international application to the USPTO on 25 March 2004. Consequently, the thirty month period for payment of the basic national fee in the United States expired as of midnight on 13 March 2005. On 08 March 2005, applicants filed *inter alia* the basic national fee.

On 22 July 2005, a Notification of Missing Requirements (Form PCT/DO/EO/905) was mailed to applicants, requiring the submission of an executed oath or declaration of the inventors and a surcharge under 37 CFR 1.492(e).

On 26 April 2006, a Notification of Abandonment (Form PCT/DO/EO/909) was mailed to applicants, indicating that this international application had become abandoned with respect to the national stage in the United States for failure to timely reply to the Notification of Missing Requirements mailed on 22 July 2005.

## DISCUSSION

Petitioner states that "The Notification states that a Notification of Missing Requirements was allegedly mailed by the Patent and Trademark Office on July 22, 2005. However, no such document was ever received by the undersigned or the firm of the undersigned," and requests withdrawal of the holding of abandonment on that basis. As explained in MPEP 711.03(c), and following *Delgar v. Schuyler, 172 USPQ 513 (D.D.C. 1971),* an adequate showing of non-receipt of papers mailed to applicant by the Office must include (1) a statement by the practitioner that the Office action was not received by the practitioner; (2) a statement attesting that a search of the file jacket and docket records indicates that the Office action was not received; and (3) a copy of the docket record where the non-received Office action would have been entered had it been received (the docket records must also be referenced in petitioner's statement).

Petitioner has satisfied requirement (1).

With respect to requirement (2), petitioner states in part that "Appended hereto is a copy of the docket entries of the firm of the undersigned showing base dates (PTO action dates) of July 22, 2005. Had the Notification of Missing Requirements been received, it would have been docketed for a response deadline of September 22, 2005. As can be seen, there is no information regarding this application (file number 920602-98737) because the Notification of Missing Requirements was never received." Though this statement arguably implies that the docket records were inspected, the petition does not include an explicit statement that a search of both the file jacket and docket records indicates that the Office action was not received. Such a statement should be made by a person having first-hand knowledge of the facts involved (i.e., by the person who conducted the search). Therefore, requirement (2) has not been satisfied at this time.

Concerning requirement (3), the instant petition is accompanied by sheets which petitioner characterizes as "docket entries of the firm of the undersigned showing base dates (PTO action dates) of July 22, 2005." However, the required docket records are those records showing all applications docketed for responses due on 22 September 2005, not just applications in which the USPTO mailed correspondence on 22 July 2005 (ideally, such records would include a "tickler sheet" listing all of the application or docket numbers with responses due on 22 September 2005). The submitted docket sheets do not clearly satisfy requirement (3).

## CONCLUSION

The petition to withdraw the holding of abandonment is **DISMISSED**, without prejudice.

If reconsideration on the merits of this petition is desired, a proper response must be filed within **TWO (2) MONTHS** from the mail date of this decision. Any reconsideration request should include be entitled "Renewed Petition Under 37 CFR 1.181."

Please direct any further correspondence with respect to this matter to the Assistant Commissioner for Patents, Mail Stop PCT, P.O. Box 1450, Alexandria, VA 22313-1450, and address the correspondence to the attention of the Office of PCT Legal Administration.

George Dombroske
PCT Legal Examiner
Office of PCT Legal Administration
Tel: (571) 272-3283
Fax: (571) 273-0459

#9

United States Patent Trademark Office

Commissioner for Patents
United States Patent and Trademark Office
P.O. Box 1450
Alexandria, VA 22313-1450
www.uspto.gov

BARNES & THORNBURG LLP
P.O. BOX 2786
CHICAGO, IL 60690-2786

14 MAY 2007

In re Application of
Warner
Application No.: 10/527,046
PCT No.: PCT/GB03/03895
Int. Filing Date: 09 September 2003
Priority Date: 13 September 2002
Attorney Docket No.: 920602-98737
For: Construction Kit

DECISION ON PETITION

This is a decision on applicants' renewed petition under 37 CFR 1.181 filed on 05 April 2007.

## DISCUSSION

In a Decision mailed on 05 March 2007, the petition to withdraw the holding of abandonment filed on 08 May 2006 was dismissed without prejudice because

> With respect to requirement (2), petitioner states in part that "Appended hereto is a copy of the docket entries of the firm of the undersigned showing base dates (PTO action dates) of July 22, 2005. Had the Notification of Missing Requirements been received, it would have been docketed for a response deadline of September 22, 2005. As can be seen, there is no information regarding this application (file number 920602-98737) because the Notification of Missing Requirements was never received." Though this statement arguably implies that the docket records were inspected, the petition does not include an explicit statement that a search of both the file jacket and docket records indicates that the Office action was not received. Such a statement should be made by a person having first-hand knowledge of the facts involved (i.e., by the person who conducted the search). Therefore, requirement (2) has not been satisfied at this time.
>
> Concerning requirement (3), the instant petition is accompanied by sheets which petitioner characterizes as "docket entries of the firm of the undersigned showing base dates (PTO action dates) of July 22, 2005." However, the required docket records are those records showing all applications docketed for responses due on 22 September 2005, not just applications in which the USPTO mailed correspondence on 22 July 2005 (ideally, such records would include a "tickler sheet" listing all of the application or docket numbers with responses due on 22 September 2005). The submitted docket sheets do not clearly satisfy requirement (3).

In response, petitioner now states that "a search of both the file of this office and the docket records indicates that the Office Action was not received." This statement is being accepted in satisfaction of requirement (2).

Regarding requirement (3), petitioner characterizes the docket records filed on "September 9, 2003" (taken to refer to the records accompanying the previous petition) as

> docket records of the firm of the undersigned having deadlines of September 22, 2005. While a "tickler sheet" could have been generated if that "tickler sheet" were prepared prior to September 22, 2005, the docket system of the firm of the undersigned does not allow an *ex parte facto* generation of any such sheet. Thus, instead although equivalently, the records submitted to the Patent and Trademark Office contain all docket entries of the firm of the undersigned having PTO action dates (that is, mailing dates by the PTO) of July 22, 2005. Had the Notice of Missing Requirements of July 22, 2005 for this application been received, one of the records would have shown that, but as the Patent and Trademark Office can see, there is no such attachment to the Petition because no such notification was ever received from the Patent and Trademark Office. What has been provided to the Patent and Trademark Office is clearly the docket record of the firm of the undersigned where the non-received paper would have been entered had it been received.

Though counsel states that the submitted sheets are in fact "the docket record of the firm," and that the requested "tickler sheet" can no longer be generated, it is not clear how the submitted sheets were generated (and therefore, it is not clear that they should be accepted as a record of all of the cases docketed for reply on 22 September 2005). That is, was petitioner working from a list of all cases having a "Base Date" of 22 July 2005 and, if so, why has that list not been furnished? An additional concern is that, in compiling the submission, petitioner may inadvertently have overlooked other cases with the same "Base Date" or otherwise docketed for reply on 22 September 2005. For these reasons, it would not be appropriate to conclude that requirement (3) has been satisfied at this time.

## CONCLUSION

The petition to withdraw the holding of abandonment is **DISMISSED**, without prejudice.

If reconsideration on the merits of this petition is desired, a proper response must be filed within **TWO (2) MONTHS** from the mail date of this decision. Any reconsideration request should include be entitled "Renewed Petition Under 37 CFR 1.181."

Please direct any further correspondence with respect to this matter to the Assistant Commissioner for Patents, Mail Stop PCT, P.O. Box 1450, Alexandria, VA 22313-1450, and address the correspondence to the attention of the Office of PCT Legal Administration.

George Dombroske
PCT Legal Examiner
Office of PCT Legal Administration
Tel: (571) 272-3283
Fax: (571) 273-0459

United States Patent and Trademark Office

#11

Commissioner for Patents
United States Patent and Trademark Office
P.O. Box 1450
Alexandria, VA 22313-1450
www.uspto.gov

BARNES & THORNBURG LLP
P.O. BOX 2786
CHICAGO, IL 60690-2786

**25 JUN 2007**

| | | |
|---|---|---|
| In re Application of<br>Warner<br>Application No.: 10/527,046<br>PCT No.: PCT/GB03/03895<br>Int. Filing Date: 09 September 2003<br>Priority Date: 13 September 2002<br>Attorney Docket No.: 920602-98737<br>For: Construction Kit | : | DECISION<br>ON<br>PETITION |

This is a decision on applicants' renewed petition under 37 CFR 1.181 filed on 23 May 2007.

## DISCUSSION

In a Decision mailed on 14 May 2007, the renewed petition to withdraw the holding of abandonment filed on 05 April 2007 was dismissed without prejudice because

> Though counsel states that the submitted sheets are in fact "the docket record of the firm," and that the requested "tickler sheet" can no longer be generated, it is not clear how the submitted sheets were generated (and therefore, it is not clear that they should be accepted as a record of all of the cases docketed for reply on 22 September 2005). That is, was petitioner working from a list of all cases having a "Base Date" of 22 July 2005 and, if so, why has that list not been furnished? An additional concern is that, in compiling the submission, petitioner may inadvertently have overlooked other cases with the same "Base Date" or otherwise docketed for reply on 22 September 2005. For these reasons, it would not be appropriate to conclude that requirement (3) has been satisfied at this time.

In response, petitioner states that

> The records previously provided to the Patent and Trademark Office were all those U.S. matters having an indicated date of September 22, 2005 and a base date of July 22, 2005. Those provided were all of the records of the firm of the undersigned having a base date of July 22, 2005 no matter when the final due date may have been. No cases were overlooked, and all U.S. cases having a July 22, 2005 base date (that is, of mailing by the Patent and Trademark office) have been included. As can be seen, there is no record for this application because no Notification of Missing Requirements was ever received.
>
> So that there is no question, also submitted herewith is the record of all matters (not just U.S.) having the base date of July 22, 2005. The first sheet is a summary of the following 28 sheets. Again, as would be expected since the PTO has seen all U.S. matters, there is no record for this application.

Upon consideration of the totality of the evidence of record, including the docket records accompanying the instant renewed petition as well as petitioner's arguments, it would be

appropriate to conclude that requirement (3) has now been satisfied. Therefore, the Notification of Abandonment (Form PCT/DO/EO/909) mailed on 26 April 2006 is hereby **VACATED**.

## CONCLUSION

The petition to withdraw the holding of abandonment is **GRANTED**.

This application is being forwarded to the National Stage Processing Branch for further processing. The date of this application under 35 U.S.C. 371(c)(1), (2) and (4) is **08 May 2006**.

George Dombroske
PCT Legal Examiner
Office of PCT Legal Administration
Tel: (571) 272-3283
Fax: (571) 273-0459

UNITED STATES PATENT AND TRADEMARK OFFICE

Commissioner for Patents
United States Patent and Trademark Office
P.O. Box 1450
Alexandria, VA 22313-1450
www.uspto.gov

31 OCT 2006

NASH & ASSOCIATES P.L.L.C.
1030 15th Street, N.W.
6th Floor
Washington, DC 20005

| | | |
|---|---|---|
| In re Application of | : | |
| NORDHEIM *et al* | : | |
| U.S. Application No.: 10/527,055 | : | |
| PCT No.: PCT/EP03/09923 | : | |
| Int. Filing Date: 08 September 2003 | : | **DECISION** |
| Priority Date: 13 September 2002 | : | |
| Attorney Docket No.: 26653U | : | |
| For: METHOD FOR DETECTING | : | |
| BIOMOLECULES | : | |

This is a decision on the papers filed 13 September 2006 which are treated as a petition to withdraw the holding of abandonment. No fee is required.

## BACKGROUND

On 14 June 2005, a Notification to Comply with Requirements for Patent Applications Containing Nucleotide and/or Amino Acid Sequence Disclosures (Form PCT/DO/EO/922) was mailed indicating that a new CRF sequence listing diskette was required. Applicants were given two months to respond with extensions available.

On 12 July 2005, applicant purportedly filed a response in the subject application which was accompanied by, *inter alia*, a "Statement for Reasons for not Complying with Requirements for a Sequence Listing." These papers were not located in the file.

On 29 August 2006, a Notification of Abandonment (Form PCT/DO/EO/909) was mailed for failing to respond to the Form PCT/DO/EO/905 mailed 14 June 2005 within the time period set therein.

On 13 September 2006, applicant filed the subject petition along with a copy of the date-stamped postcard receipt for the documents purportedly filed 12 July 2005 and a copy of those documents.

## DISCUSSION

Applicants claim that a response to the Form PCT/DO/EO/922 mailed 14 June 2005 was filed in the above-captioned application on 12 July 2005 and the holding of abandonment should be withdrawn. Applicants submitted a copy of a response filed 12

July 2005 along with a date-stamped postcard receipt. However, a review of the papers purportedly filed 12 July 2005 show that the U.S. application number listed on the response is **10/503,261**, not **10/527,055**. (A check of U.S. application No. 10/503,261 verifies that this response was received on 12 July 2005 and is located in U.S. application No. 10/503,261.)

Accordingly, a response to the Form PCT/DO/EO/922 mailed 14 June 2005 was not properly filed in the subject application.

## CONCLUSION

In view of the above, the petition to withdraw the holding of abandonment is **DISMISSED** without prejudice.

The above-captioned application remains **ABANDONED**.

Applicants may wish to file a petition under 37 CFR 1.182 to attempt to correct the U.S. application number listed on the response filed 12 July 2005. A $400.00 petition fee would be required. Applicants must also show that the response located in U.S. application No. 10/503,261 was intended as a response in the subject application. Moreover, any petition request **must** be signed by the attorney of record.

This application is being held in the Office of PCT Legal Administration to await a response from applicants.

James Thomson

James Thomson
Attorney Advisor
Office of PCT Legal Administration

Tel.: (571) 272-3302

UNITED STATES PATENT AND TRADEMARK OFFICE

Commissioner for Patents
United States Patent and Trademark Office
P.O. Box 1450
Alexandria, VA 22313-1450
www.uspto.gov

04 DEC 2006

NASH & ASSOCIATES P.L.L.C.
1030 15th Street, N.W.
6th Floor
Washington, DC 20005

| | | |
|---|---|---|
| In re Application of<br>NORDHEIM *et al*<br>U.S. Application No.: 10/527,055<br>PCT No.: PCT/EP03/09923<br>Int. Filing Date: 08 September 2003<br>Priority Date: 13 September 2002<br>Attorney Docket No.: 26653U<br>For: METHOD FOR DETECTING BIOMOLECULES | : | **DECISION** |

This is a decision on the "Petition Under 37 C.F.R. § 1.182" filed 07 November 2006.

## BACKGROUND

On 31 October 2006, a decision dismissing applicants' petition to withdraw the holding of abandonment was mailed. The papers filed 12 July 2005 in response to the Form PCT/DO/EO/922 mailed 14 June 2005 listed another U.S. application number on them.

On 07 November 2006, applicants filed the subject petition to correct the U.S. application number on the response filed 12 July 2005.

## DISCUSSION

Applicants request that the response filed 12 July 2005 be corrected to identify the above-captioned application pursuant to 37 CFR 1.182. The $400.00 petition fee had been paid.

Applicants state that a response to the Form PCT/DO/EO/922 was filed in the above-captioned application on 12 July 2005. However, the U.S. application number was listed as 10/503,261 "due to a typographical error. All of the information identifying the present application appears correct on the documents filed except for the U.S. Application Serial Number listed thereon."

A review of the papers submitted on 12 July 2005 show that the name of the applicant, docket number, the above-captioned title, and PCT number were listed on these papers. However, the U.S. application number was listed incorrectly.

Hence, it is clear that a timely response to the Form PCT/DO/EO/922 was clearly intended but was placed in the wrong application due to a clerical error.

This is sufficient for a grantable petition. The clerical error has been corrected.

**DECISION**

For the reasons noted above, the petition under 37 CFR 1.182 and to withdraw the holding of abandonment is **GRANTED**.

The Form PCT/DO/EO/909 mailed 29 August 2006 is hereby **VACATED**.

This application is being forwarded to the National Stage Processing Division of the Office of PCT Operations for continued processing.

James Thomson

James Thomson
Attorney Advisor
Office of PCT Legal Administration

Tel.: (571) 272-3302

## SPE RESPONSE FOR CERTIFICATE OF CORRECTION

**Paper No.:** _____

**DATE** : 12-17-08

**TO SPE OF** : ART UNIT 1793

**SUBJECT** : Request for Certificate of Correction for Appl. No.: 10/527058 Patent No.: 7410930

Please respond to this request for a certificate of correction within 7 days.

**FOR IFW FILES:**

Please review the requested changes/corrections as shown in the **COCIN** document(s) in the IFW application image. No new matter should be introduced, nor should the scope or meaning of the claims be changed.

Please complete the response (see below) and forward the completed response to scanning using document code **COCX**.

**FOR PAPER FILES:**

Please review the requested changes/corrections as shown in the attached certificate of correction. Please complete this form (see below) and forward it with the file to:

**Certificates of Correction Branch (CofC)**
**South Tower - 9A22**
**Palm Location 7580**

**Certificates of Correction Branch**
**703-308-9390 ext.** 127

**Thank You For Your Assistance**

**The request for issuing the above-identified correction(s) is hereby:**
Note your decision on the appropriate box.

- ☑ **Approved** — **All** changes apply.
- ☐ **Approved in Part** — Specify below which changes **do not** apply.
- ☐ **Denied** — State the reasons for denial below.

**Comments:** _____

_____

_____

_____

_____

**SPE** **Art Unit** 1793

07 JUN 2006

United States Patent and Trademark Office

#6

Commissioner for Patents
United States Patent and Trademark Office
P.O. Box 1450
Alexandria, VA 22313-1450
www.uspto.gov

Browdy and Neimark, PLLC
624 Ninth Street, NW
Suite 300
Washington, DC 20001-5303

| | | |
|---|---|---|
| In re Application of | : | |
| Kushmaro et al. | : | |
| Application No.: 10/527,076 | : | |
| PCT No.: PCT/IL03/00725 | : | |
| Int. Filing Date: 03 September 2003 | : | DECISION |
| Priority Date: 09 September 2002 | : | |
| Attorney Docket No.: KUSHMARO1 | : | |
| For: Method For Isolating And Culturing | : | |
| Unculturable Microorganisms | : | |

This is a decision on the correspondence filed on 23 January 2006, which is being treated under 37 CFR 1.42.

## DISCUSSION

This international application was filed on 03 September 2003 and claimed a priority date of 09 September 2002. The United States was designated. The International Bureau communicated a copy of the published international application to the USPTO on 18 March 2004. Consequently, the thirty month period for payment of the basic national fee in the United States expired as of midnight on 09 March 2005. On 09 March 2005, applicants filed *inter alia* the basic national fee.

On 26 September 2005, a Notification of Missing Requirements (Form PCT/DO/EO/905) was mailed to applicants, requiring the submission of an oath or declaration of the inventors in compliance with 37 CFR 1.497(a) and (b), an initial computer readable form (CRF) of the sequence listing, and a statement that the sequence listing recorded on the CRF is identical to the written (on paper or compact disc) sequence listing, and, where applicable, contains no new matter.

On 23 January 2006, applicant filed the present response which was accompanied by, *inter alia*, a declaration of the inventors and an acceptable sequence listing in computer-readable form.

## DISCUSSION

Inspection of the declaration of the inventors filed on 23 January 2006 reveals that joint inventor Shimona Geresh is indicated to be"deceased." 37 CFR 1.42 provides that

> In case of the death of the inventor, the legal representative (executor, administrator, etc.) of the deceased inventor may make the necessary oath or declaration, and apply for and obtain the patent.

Meanwhile, 37 CFR 1.497(b)(2), as amended effective 08 September 2000, provides that

If the person making the oath or declaration is not the inventor (§§ 1.42, 1.43 or 1.47), the oath or declaration shall state the relationship of the person to the inventor, and, upon information and belief, the facts which the inventor would have been required to state. If the person signing the oath or declaration is the legal representative of a deceased inventor, the oath or declaration shall also state that the person is a legal representative and the citizenship, residence and mailing address of the legal representative.

Further examination of the declaration documents filed on 23 January 2006 reveals that one of them names the same inventive entity as was nominated in the international application, indicates that Shimona Geresh is deceased, and has been signed by Ariel Kushmaro. The second declaration document filed on 23 January 2006 also names the same inventive entity as was nominated in the international application and is signed on behalf of Shimona Geresh by Shaul Geresh, who is indicated to be the "sole heir of Shimona Geresh, deceased," and indicates that he has "the authority corresponding to an executor or administrator under the laws of Israel." This declaration provides post office address, residence and citizenship information for Shaul Geresh, as well as citizenship and residence information (but not postal address information) for Shimona Geresh. However, in view of the fact that the post office address provided for Shaul Geresh is identical to the residence address provided for Shimona Geresh, it is presumed that this same address is also the former postal address for Shimona Geresh. Applicants are required to promptly notify the Office of PCT Legal Administration if this presumption is in error.

## CONCLUSION

The declaration is **ACCEPTED** under 37 CFR 1.42, without prejudice.

This application is being forwarded to the National Stage Processing Branch for further processing. Its date under 35 U.S.C. 371(c)(1), (2) and (4) is **23 January 2006**.

Richard Cole
PCT Legal Examiner
Office of PCT Legal Administration

George M. Dombroske
PCT Legal Examiner
Office of PCT Legal Administration
Tel: (571) 272-3283
Fax: (571) 273-0459

UNITED STATES PATENT AND TRADEMARK OFFICE

Commissioner for Patents
United States Patent and Trademark Office
P.O. Box 1450
Alexandria, VA 22313-1450
www.uspto.gov

BROWDY AND NEIMARK, P.L.L.C.
624 NINTH STREET, NW
SUITE 300
WASHINGTON DC 20001-5303

COPY MAILED

SEP 30 2009

OFFICE OF PETITIONS

In re Application of

Kushmaro, et al.

Application No. 10/527,076

Filed: January 23, 2006

Attorney Docket No. **KUSHMARO1**

DECISION ON PETITION

This is a decision on the petition under 37 CFR 1.137(b), filed August 20, 2009, to revive the above-identified application.

The petition is **GRANTED**.

The above-identified application became abandoned for failure to file a timely response to the non-final Office action mailed February 9, 2009. The non-final Office action set a shortened statutory period for reply of three months from its mailing date. No response was received within the allowable period and the application became abandoned on May 10, 2009. A Notice of Abandonment was mailed on August 14, 2009.

The continuing application accorded application serial number 12/537,646, filed August 7, 2009, is noted. With continuity having been established, the subject application is again abandoned in favor of the continuing application.

Telephone inquiries concerning this decision should be directed to the undersigned at (571) 272-3222.

Kenya A. McLaughlin
Petitions Attorney
Office of Petitions

#5

UNITED STATES PATENT AND TRADEMARK OFFICE

Commissioner for Patents
United States Patent and Trademark Office
P.O. Box 1450
Alexandria, VA 22313-1450
www.uspto.gov

31 JAN 2006

William F. Westerman
Westerman, Hattori, Daniels & Adrian, LLP
1250 Connecticut Avenue, NW
Suite 700
Washington, DC 20036

| | | |
|---|---|---|
| In re Application of | : | |
| MAEKAWA, et al. | : | |
| Application No.: 10/527,087 | : | DECISION ON REQUEST |
| PCT No.: PCT/JP02/09302 | : | |
| Int. Filing Date: 11 September 2002 | : | FOR STATUS UNDER |
| Priority Date: None | : | |
| Atty. Docket No.: 052171 | : | 37 CFR 1.42 |
| For: ACTIVE MUSCLE DISPLAY DEVICE | : | |

This decision is in response to applicant's "Response to Notification of Missing Requirements" filed in the United States Patent and Trademark Office (USPTO) on 14 November 2005. The response is being treated as a request for status under 37 CFR §1.42. No petition fee is due.

## BACKGROUND

On 11 September 2002, applicant filed international application PCT/JP02/09302. The thirty-month period for paying the basic national fee in the United States expired at midnight on 11 March 2005.

On 10 March 2005, applicant filed a transmittal letter for entry into the national stage in the United States, which was accompanied by the requisite basic national fee as required by 35 U.S.C. 371(c)(1); an English translation of the international application and a First Preliminary Amendment. An executed oath or declaration of the inventor as required by 35 U.S.C. 371 (c)(4) was not filed.

On 15 September 2005, applicant was mailed a "NOTIFICATION OF MISSING REQUIREMENTS UNDER 35 U.S.C. 371" (Form PCT/DO/EO/905) informing applicant of the need to provide an oath or declaration of the inventors, in compliance with 37 CFR 1.497(a) and (b), identifying the application by the International application number and international filing date. Applicant was afforded two months to file the proper reply and informed that this period could be extended pursuant to 37 CFR 1.136(a).

On 14 November 2005, applicant filed the present request accompanied by an executed declaration.

## DISCUSSION

Pursuant to 37 CFR 1.42, first sentence:

"In case of the death of the inventor, the legal representative (executor, administrator, etc.) of the deceased inventor may make the necessary oath or declaration, and apply for and obtain a patent."

The declaration filed 14 November 2004 is executed by joint inventors Satoshi Maekawa, Yoshihisa Fujiwara and Takahiko Arimoto. In addition, the declaration is executed by Hiroko Kotani as the sole legal heir to estate of deceased joint inventor, Manabu Kotani. The declaration provides the residence, post office address and country of citizenship for both the deceased inventor and his heir. The declaration identifies Ms. Kotani as the sole heir to the estate.

The submission of the declaration executed by all of the heirs of the deceased inventor is hereby construed as an indication that no legal representative of the deceased's estate has been appointed and that no legal representative is required by the applicable law to be appointed. If this interpretation is incorrect applicant is required to promptly notify the Office of such and to submit a declaration properly executed by the legal representative of the deceased inventor in response to this decision.

As detailed above, it is proper to grant applicant's petition at this time.

## CONCLUSION

Applicant's petition under 37 CFR 1.42 is **GRANTED**.

This application will be given an international application filing date of 11 September 2002 and a date of **14 November 2005** under 35 U.S.C. 371(c)(1), (c)(2) and (c)(4).

This application is being returned to the DO/EO/US for processing in accordance with this decision.

Derek A. Putonen
Attorney Advisor
Office of PCT Legal Administration
Tel: (571) 272-3294
Fax: (571) 273-0459

#9

UNITED STATES PATENT AND TRADEMARK OFFICE

Commissioner for Patents
United States Patent and Trademark Office
P.O. Box 1450
Alexandria, VA 22313-1450
www.uspto.gov

12 JUL 2006

Dickstein, Shapiro, Morin & Oshinsky, LLP
2101 L Street, NW
Washington, D.C. 20037

| | |
|---|---|
| In re Application of<br>BEKANICH et al.<br>U.S. Application No.: 10/527,092<br>PCT No.: PCT/US04/23518<br>Int. Filing Date: 23 July 2004<br>Priority Date: 23 July 2003<br>Attorney Docket No.: B6225.0001/P0001<br>For: AIRTIME CONTACT MANAGER | DECISION ON PETITION<br>UNDER 37 CFR 1.47(a) |

This decision is in response to applicants' "Renewed Petition under 37 CFR 1.47(a)" filed 28 April 2006 to accept the application without the signature of joint-inventor, Joseph A. Bekanich.

## BACKGROUND

On 23 July 2004, applicants filed international application PCT/US04/23518 which claimed a priority date of 23 July 2003. Pursuant to 37 CFR 1.495, the thirty-month period for paying the basic national fee in the United States expired at midnight on 23 January 2006.

On 09 March 2005, applicants filed a transmittal letter for entry into the national stage in the United States, which accompanied by, inter alia: the requisite basic national fee as required by 35 U.S.C. 371(c)(1); a copy of the international application; and an information disclosure statement.

On 29 July 2005, applicant was mailed a "Notification of Missing Requirements under 35 U.S.C. 371" (Form PCT/DO/EO/905) informing applicant of the need to provide an oath or declaration of the inventors, in compliance with 37 CFR 1.497(a) and (b), identifying the application by the International application number and international filing date. Applicant was afforded two months to file the proper reply and informed that this period could be extended pursuant to 37 CFR 1.136(a).

On 07 November 2005, applicants filed a petition under 37 CFR 1.47(a). In a decision dated 28 February 2006, applicants' petition under 37 CFR 1.47(a) was dismissed without prejudice.

On 28 April 2006, applicant filed the present renewed petition under 37 CFR 1.47(a).

## DISCUSSION

A petition under 37 CFR 1.47(a) must be accompanied by (1) the fee under 37 CFR 1.17(h), (2) factual proof that the missing joint inventor refuses to execute the application or cannot be reached after diligent effort, (3) a statement of the last known address of the missing inventor, and (4) an oath or declaration by each 37 CFR 1.47(a) applicant on his or her own behalf and behalf of the non-signing joint inventor. Items (1); (2); and (3) have been satisfied.

A review of the present petition and the accompanying papers reveal that applicants have satisfied item (2), in that the applicants have shown that a bona fide attempt was made to present the application papers, including the specification, claims, and drawings to Joseph A. Bekanich. The steps taken by petitioner are sufficient to show that Joseph A. Bekanich has refused to execute the application.

As to item (4), the declaration filed 28 April 2006 is not in compliance with 37 CFR 1.497(a)-(b), in that, alterations were made to the declaration after it was executed. Specifically, the declaration submitted with the present petition includes information (the citizenship of the fourth inventor) that was not contained on the declaration filed 07 November 2005 and these alterations have been made after the declaration had been executed by the other joint-inventors.

37 CFR 1.52(c) states:

(c) Any interlineation, erasure, cancellation or other alteration of the application papers filed should be made before the signing of any accompanying oath or declaration pursuant to § 1.63 referring to those application papers and should be dated and initialed or signed by the applicant on the same sheet of paper. Application papers containing alterations made after the signing of an oath or declaration referring to those application papers must be supported by a supplemental oath or declaration under 1.67.

Additionally, section 605.04(a) of the MPEP states in part:

In summary, it is emphasized that the application filed must be the application executed by the applicant and **it is improper for anyone, including counsel,** to alter, rewrite, or partly fill in any part of the application, **including the oath or declaration,** after execution of the oath or declaration by the applicant (emphasis added).

Therefore, the copy of the declaration filed cannot be accepted at this time and a newly executed declaration is required.

For the reasons stated above, it would not be appropriate to accept the application without the signature of Joseph A. Bekanich under 37 CFR 1.47(a) at this time.

## CONCLUSION

The petition under 37 CFR 1.47(a) is **DISMISSED** without prejudice.

If reconsideration on the merits of this petition is desired, a proper response must be filed within **TWO (2) MONTHS** from the mail date of this decision. Any reconsideration request should include a cover letter entitled "Renewed Petition Under 37 CFR 1.47(a)." No additional petition fee is required.

Any further correspondence with respect to this matter should be addressed to: Mail Stop PCT, Commissioner for Patents, Office of PCT Legal Administration, P.O. Box 1450, Alexandria, Virginia 22313-1450, with the contents of the letter marked to the attention of the Office of PCT Legal Administration.

Anthony Smith

Anthony Smith
Attorney-Advisor
Office of PCT Legal Administration
Tel: (571) 272-3298
Fax: (571) 273-0459

28 FEB 2006

#7

UNITED STATES PATENT AND TRADEMARK OFFICE

Commissioner for Patents
United States Patent and Trademark Office
P.O. Box 1450
Alexandria, VA 22313-1450
www.uspto.gov

Dickstein, Shapiro, Morin & Oshinsky, LLP
2101 L Street, NW
Washington, D.C. 20037

| | | |
|---|---|---|
| In re Application of | : | |
| BEKANICH et al. | : | |
| U.S. Application No.: 10/527,092 | : | DECISION ON PETITION |
| PCT No.: PCT/US04/23518 | : | UNDER 37 CFR 1.47(a) |
| Int. Filing Date: 23 July 2004 | : | |
| Priority Date: 23 July 2003 | : | |
| Attorney Docket No.: B6225.0001/P0001 | : | |
| For: AIRTIME CONTACT MANAGER | : | |

This decision is in response to applicants' "Petition under 37 CFR 1.47(a)" filed 07 November 2005 to accept the application without the signature of joint-inventor, Joseph A. Bekanich.

## BACKGROUND

On 23 July 2004, applicants filed international application PCT/US04/23518 which claimed a priority date of 23 July 2003. Pursuant to 37 CFR 1.495, the thirty-month period for paying the basic national fee in the United States expired at midnight on 23 January 2006.

On 09 March 2005, applicants filed a transmittal letter for entry into the national stage in the United States, which accompanied by, inter alia: the requisite basic national fee as required by 35 U.S.C. 371(c)(1); a copy of the international application; and an information disclosure statement.

On 29 July 2005, applicant was mailed a "Notification of Missing Requirements under 35 U.S.C. 371" (Form PCT/DO/EO/905) informing applicant of the need to provide an oath or declaration of the inventors, in compliance with 37 CFR 1.497(a) and (b), identifying the application by the International application number and international filing date. Applicant was afforded two months to file the proper reply and informed that this period could be extended pursuant to 37 CFR 1.136(a).

On 07 November 2005, applicants filed the present petition under 37 CFR 1.47(a).

## DISCUSSION

A petition under 37 CFR 1.47(a) must be accompanied by (1) the fee under 37 CFR 1.17(h), (2) factual proof that the missing joint inventor refuses to execute the application or cannot be reached after diligent effort, (3) a statement of the last known address of the

missing inventor, and (4) an oath or declaration by each 37 CFR 1.47(a) applicant on his or her own behalf and behalf of the non-signing joint inventor. Items (1) and (3) have been satisfied.

Regarding item (2) above, petitioner states that Joseph A. Bekanich has refused to sign the application. Section 409.03(d) of the Manual of Patent Examining Procedure (M.P.E.P.), **Proof of Unavailability or Refusal**, states, in part:

> Where a refusal of the inventor to sign the application papers is alleged, the circumstances of the presentation of the application papers and of the refusal must be specified in a statement of facts by the person who presented the inventor with the application papers and/or to whom the refusal was made. Statements by a party not present when an oral refusal is made will not be accepted.
>
> Proof that a bona fide attempt was made to present a copy of the application papers (specification, including claims, drawings, and oath or declaration) to the nonsigning inventor for signature, but the inventor refused to accept delivery of the papers or expressly stated that the application papers should not be sent, may be sufficient. When there is an express oral refusal, that fact along with the time and place of the refusal must be stated in the statement of facts. When there is an express written refusal, a copy of the document evidencing that refusal must be made part of the statement of facts. The document may be redacted to remove material not related to the inventor's reasons for refusal.
>
> When it is concluded by the 37 CFR 1.47 applicant that a nonsigning inventor's conduct constitutes a refusal, all facts upon which that conclusion is based should be stated in the statement of facts in support of the petition or directly in the petition. If there is documentary evidence to support facts alleged in the petition or in any statement of facts, such evidence should be submitted. Whenever a nonsigning inventor gives a reason for refusing to sign the application oath or declaration, that reason should be stated in the petition.

A review of the present petition reveals that petitioner has not shown that a bona fide attempt was made to present the application papers (specification, claims, drawings, and oath/declaration) to Joseph A. Bekanich. Bradley J. Olsen states that a copy of the Declaration/Power of Attorney and Assignment were sent to Mr. Bekanich on September 16, 2005, but the envelope was returned as unclaimed. The mailing of the Declaration and Assignment is not considered a complete copy of the application. As stated above, where a refusal of the inventor to sign the application papers is alleged, a statement of facts is needed from a person having first hand knowledge of the facts that a complete copy of the application papers (specification, claims, drawings, and oath/declaration) were sent to Joseph A. Bekanich, and when such papers were sent. In addition, copies of documentary evidence such as a certified mail return receipt, cover letter of instruction, telegrams, etc.,

should be supplied with the declaration.

Counsel is reminded that pursuant to MPEP 409.03(d), the complete application should be mailed to the last known address of the non-signing inventor or if the nonsigning inventor is represented by counsel, to the address of the non-signing inventor's attorney.

As to item (4), an oath or declaration by each 37 CFR 1.47(a) applicant on his or her own behalf and behalf of the nonsigning joint inventor has been included with the present petition. However, the declaration submitted is not in compliance with 37 CFR 1.497(a)(3) which requires that the oath or declaration identify the inventor and country of citizenship of the inventor. In this case, the declaration does not include the citizenship of the fourth inventor (Jerry Fenzel). Since the declaration does not clearly identify the citizenship of the inventor, it is considered defective under 37 CFR 1.497(a)(3) and 37 CFR 1.63(c)(1).

For the reasons stated above, it would not be appropriate to accept the application without the signature of Joseph A. Bekanich under 37 CFR 1.47(a) at this time.

## CONCLUSION

The petition under 37 CFR 1.47(a) is **DISMISSED** without prejudice.

If reconsideration on the merits of this petition is desired, a proper response must be filed within **TWO (2) MONTHS** from the mail date of this decision. Any reconsideration request should include a cover letter entitled "Renewed Petition Under 37 CFR 1.47(a)." No additional petition fee is required.

Any further correspondence with respect to this matter should be addressed to: Mail Stop PCT, Commissioner for Patents, Office of PCT Legal Administration, P.O. Box 1450, Alexandria, Virginia 22313-1450, with the contents of the letter marked to the attention of the Office of PCT Legal Administration.

Anthony Smith
Attorney-Advisor
Office of PCT Legal Administration
Tel: (571) 272-3298
Fax: (571) 273-0459

#11

UNITED STATES PATENT AND TRADEMARK OFFICE

Commissioner for Patents
United States Patent and Trademark Office
P.O. Box 1450
Alexandria, VA 22313-1450
www.uspto.gov

21 SEP 2006

Dickstein, Shapiro, Morin & Oshinsky, LLP
2101 L Street, NW
Washington, D.C. 20037

| | | |
|---|---|---|
| In re Application of | : | |
| BEKANICH et al. | : | |
| U.S. Application No.: 10/527,092 | : | DECISION ON PETITION |
| PCT No.: PCT/US04/23518 | : | UNDER 37 CFR 1.47(a) |
| Int. Filing Date: 23 July 2004 | : | |
| Priority Date: 23 July 2003 | : | |
| Attorney Docket No.: B6225.0001/P0001 | : | |
| For: AIRTIME CONTACT MANAGER | : | |

This decision is in response to applicants' "Renewed Petition under 37 CFR 1.47(a)" filed 12 September 2006 to accept the application without the signature of joint-inventor, Joseph A. Bekanich.

## BACKGROUND

On 23 July 2004, applicants filed international application PCT/US04/23518 which claimed a priority date of 23 July 2003. Pursuant to 37 CFR 1.495, the thirty-month period for paying the basic national fee in the United States expired at midnight on 23 January 2006.

On 09 March 2005, applicants filed a transmittal letter for entry into the national stage in the United States, which accompanied by, inter alia: the requisite basic national fee as required by 35 U.S.C. 371(c)(1); a copy of the international application; and an information disclosure statement.

On 29 July 2005, applicant was mailed a "Notification of Missing Requirements under 35 U.S.C. 371" (Form PCT/DO/EO/905) informing applicant of the need to provide an oath or declaration of the inventors, in compliance with 37 CFR 1.497(a) and (b), identifying the application by the International application number and international filing date. Applicant was afforded two months to file the proper reply and informed that this period could be extended pursuant to 37 CFR 1.136(a).

On 07 November 2005, applicants filed a petition under 37 CFR 1.47(a). In a decision dated 28 February 2006, applicants' petition under 37 CFR 1.47(a) was dismissed without prejudice.

On 28 April 2006, applicant filed a renewed petition under 37 CFR 1.47(a). In a decision dated 12 July 2006, applicants' petition under 37 CFR 1.47(a) was dismissed without prejudice.

On 12 September 2006, applicant filed the present renewed petition under 37 CFR 1.47(a).

## DISCUSSION

A petition under 37 CFR 1.47(a) must be accompanied by (1) the fee under 37 CFR 1.17(h), (2) factual proof that the missing joint inventor refuses to execute the application or cannot be reached after diligent effort, (3) a statement of the last known address of the missing inventor, and (4) an oath or declaration by each 37 CFR 1.47(a) applicant on his or her own behalf and behalf of the non-signing joint inventor.

A review of the papers filed 07 November 2005, 28 April 2006 and 12 September 2006 reveals that petitioner has paid the requisite petition fee, provided sufficient proof that the non-signing inventor (Joseph A. Bekanich) refused to sign, stated the last known address of the non-signing inventor (Joseph A. Bekanich), and provided an acceptable declaration. Accordingly, all of the requirements of items (1), (2), (3), and (4) above have been satisfied.

## CONCLUSION

The petition under 37 CFR 1.47(a) is **GRANTED**.

The application will be given an international filing date of 23 July 2004 under 35 U.S.C. 363, and a date of **12 September 2006** under 35 U.S.C. 371(c).

As provided in 37 CFR 1.47(a), a notice of the filing of this application will be forwarded to the nonsigning inventor at his last known address of record. A notice of the filing of the application under 37 CFR 1.47(a) will be published in the Official Gazette.

This application is being returned to the United States Designated/Elected Office for processing in accordance with this decision.

Anthony Smith
Attorney-Advisor
Office of PCT Legal Administration
Tel: (571) 272-3298
Fax: (571) 273-0459

UNITED STATES PATENT AND TRADEMARK OFFICE

Commissioner for Patents
United States Patent and Trademark Office
P.O. Box 1450
Alexandria, VA 22313-1450
www.uspto.gov

GENENTECH, INC.
1 DNA WAY
SOUTH SAN FRANCISCO CA 94080

COPY MAILED
NOV 14 2008

| | | |
|---|---|---|
| In re Application of | : | |
| Sarah C. BODARY-WINTER et al. | : | |
| Application No. 10/527,101 | : | DECISION ON PETITION |
| Filed: December 27, 2005 | : | |
| Attorney Docket No. P1978R1 | : | |

This is a decision on the petition under the unintentional provisions of 37 CFR 1.137(b), filed October 23, 2008, to revive the above-identified application.

The petition is **GRANTED**.

The above identified application became abandoned for failure to reply in a timely manner to the non-final Office action mailed April 7, 2008, which set a shortened statutory period for reply of three (3) months. No extensions of time under the provisions of 37 CFR 1.136(a) were obtained. Accordingly, the application became abandoned on July 8, 2008.

The petition satisfies the requirements of 37 CFR 1.137(b) in that petitioner has supplied (1) the reply in the form of an amendment, (2) the petition fee of $1620 and (3) an adequate statement of unintentional delay.

37 CFR 1.137(b)(3) requires a statement that "the entire delay in filing the required reply from the due date for the reply until the filing of a grantable petition pursuant to 37 CFR 1.137(b) was unintentional." Since the statement appearing in the petition varies from the language required by 37 CFR 1.137(b)(3), the statement is being construed as the required statement. Petitioner must notify the Office if this is **not** a correct reading of the statement appearing in the petition.

The Power of Attorney and Change of Correspondence Address filed November 5, 2008 has been received in the application. Such submission was signed by Paul Naik as the Associate General Counsel and Director of the Assignee. However there is no indication that the person signing such submission was a person authorized to act on behalf of the assignee. In this regard attention is directed to 37 CFR 373(b), which provides:

37 CFR 3.73(b) provides:

(1) In order to request or take action in a patent or trademark matter, the assignee must establish its ownership of the patent or trademark property of paragraph (a) of this section to the satisfaction of the Director. The establishment of ownership by the assignee may be combined with the paper that requests or takes the action. Ownership is established by submitting to the Office a signed statement identifying the assignee, accompanied by either:

(i) Documentary evidence of a chain of title from the original owner to the assignee (e.g., a copy of an executed assignment). For patent matters only, the submission of the documentary evidence must be accompanied by a statement affirming that the documentary evidence of the chain of title from the original owner to the assignee was or concurrently is being submitted for recordation pursuant to § 3.11; or

(ii) A statement specifying where documentary evidence of a chain of title from the original owner to the assignee is recorded in the assignment records of the Office (e.g., reel and frame number).

(2) The submission establishing ownership must show that the person signing the submission is a person authorized to act on behalf of the assignee by:

(i) Including a statement that the person signing the submission is authorized to act on behalf of the assignee; or

(ii) Being signed by a person having apparent authority to sign on behalf of the assignee, e.g., an officer of the assignee.

(c) For patent matters only:

(1) Establishment of ownership by the assignee must be submitted prior to, or at the same time as, the paper requesting or taking action is submitted.

(2) If the submission under this section is by an assignee of less than the entire right, title and interest, such assignee must indicate the extent (by percentage) of its ownership interest, or the Office may refuse to accept the submission as an establishment of ownership.

If the person signing the Power of Attorney and Change of Correspondence address desires to make such changes regarding this application, the appropriate power of attorney document must be submitted.

Furthermore, an Associate Power of Attorney was filed with the Power of Attorney and Change of Correspondence Address filed November 5, 2008, but was filed after June 25, 2004, the effective date of a rule change eliminating the Associate Power of Attorney practice (37 CFR 1.34(b) was eliminated). See MPEP § 402.02 and Revision of Power of Attorney and Assignment Practice, 69 Fed. Reg. 29865 (May 26, 2004); 1283 Off. Gaz. 148 (June 22, 2004).

Therefore, in addition to reasons set forth in the preceding discussion, the names of the patent practitioners of the Customer No. 77845 listed on the November 5, 2008 Power of Attorney have not been made of record.

It is not apparent whether the person signing the statement of unintentional delay was in a position to have firsthand or direct knowledge of the facts and circumstances of the delay at issue. Nevertheless, such statement is being treated as having been made as the result of a reasonable inquiry into the facts and circumstances of such delay. See 37 CFR 10.18(b) and Changes to Patent Practice and Procedure; Final Rule Notice, 62 Fed. Reg. 53131, 53178 (October 10, 1997), 1203 Off. Gaz. Pat. Office 63, 103 (October 21, 1997). In the event that such an inquiry has not been made, petitioner must make such an inquiry. If such inquiry results in the discovery that it is not correct that the entire delay in filing the required reply from the due date for the reply until the filing of a grantable petition pursuant to 37 CFR 1.137(b) was unintentional, petitioner must notify the Office.

There is no indication that the person signing the petition was ever given a power of attorney to prosecute the application. If the person signing the petition desires to receive future correspondence regarding this application, the appropriate power of attorney document must be submitted. While a courtesy copy of this decision is being mailed to the person signing the petition, all future correspondence will be directed to the address currently of record until appropriate instructions are received.

**Petitioner should note that the correct name associated with the Registration No. is 43,626 is PanPan Gao not Pamela Gao.**

Telephone inquiries concerning this decision should be directed to Karin Reichle at (571) 272-6051.

This application is being referred to Technology Center AU 1645 for appropriate action by the Examiner in the normal course of business on the reply received October 23, 2008.

David Bucci
Petitions Examiner
Office of Petitions

Cc: PanPan Gao
GOODWIN PROCTER LLP
135 Commonwealth Drive
Menlo Park, California 94025

25 MAY 2006

UNITED STATES PATENT AND TRADEMARK OFFICE

Commissioner for Patents
United States Patent and Trademark Office
P.O. Box 1450
Alexandria, VA 22313-1450
www.uspto.gov

32294
SQUIRE, SANDERS & DEMPSEY, L.L.P.
14TH Floor, 8000 Towers Crescent
Tysons Corner, VA 22182

| | | |
|---|---|---|
| In re Application of | : | |
| PUNAGANTI VENKATA *et al* | : | |
| U.S. Application No.: 10/527,105 | : | |
| PCT No.: PCT/FI2003/000679 | : | |
| Int. Filing Date: 17 September 2003 | : | **DECISION** |
| Priority Date: 18 September 2003 | : | |
| Attorney Docket No.: 60091.00381 | : | |
| For: USER-CONFIGURABLE CALL | : | |
| ANSWERING/REDIRECTION | : | |
| MECHANISM | : | |

This decision is in response to the papers filed 13 February 2006 which are treated as a petition under 37 CFR 1.182.

## BACKGROUND

On 17 May 2005, applicants filed an express request to enter the national stage of PCT/FI2003/000679 which was accompanied by, *inter alia*, an executed declaration.

On 14 June 2005, the United States Designated/Elected Office (DO/EO/US) mailed a Notification of Missing Requirements Under 35 U.S.C. 371 (Form PCT/DO/EO/905) indicating that a declaration in compliance with 37 CFR 1.497(a) and (b) must be provided. The Form PCT/DO/EO/905 noted that the first inventor's name was different on the declaration submitted 17 May 2005 than on the international application and requested an explanation.

On 26 August 2005, applicants filed a response without explaining the discrepancy in the name of the inventor recorded on the declaration.

On 11 January 2006, the DO/EO/US mailed a Notification of a Defective Response (Form PCT/DO/EO/916) indicating that the declaration filed 17 May 2005 does not comply with 37 CFR 1.497(a) and (b) as the first inventor's name was different from listed on the international publication and no changes were recorded in the international application. Applicants were given one month to respond.

On 13 February 2006, applicants filed the subject petition which was

accompanied by, *inter alia*, an affidavit of the first inventor and authorization to charge the petition fee to Deposit Account No. 50-2222.

## DISCUSSION

Petitioners request that the declaration filed 17 May 2005 be accepted as in compliance with 37 CFR 1.497(a) and (b) and have submitted the subject petition which is treated under 37 CFR 1.182. The petition fee of $400.00 has been charged to counsel's Deposit Account as authorized.

Petitioners included an affidavit by the first named inventor who certifies that her full name is Murali Krishna Punaganti Venkata and that her name was listed only as Murali Punaganti on the PCT application. This explanation is accepted. The proper name for the inventor is Murali Krishna Punaganti Venkata.

## CONCLUSION

Applicants' petition under 37 CFR 1.182 is **GRANTED**.

The declaration filed with the national stage papers on 17 May 2005 is now in compliance with 37 CFR 1.497(a) and (b).

This application is being forwarded to the National Stage Processing Division of the Office of PCT Operations for continued processing

James Thomson

James Thomson
Attorney Advisor
Office of PCT Legal Administration

Tel.: (571) 272-3302

19 SEP 2005

UNITED STATES PATENT AND TRADEMARK OFFICE

Commissioner for Patents
United States Patent and Trademark Office
P.O. Box 1450
Alexandria, VA 22313-1450
www.uspto.gov

Dona C. Edwards
Steinberg & Raskin, P.C.
1140 Avenue of the Americas
15th Floor
New York, NY 10036-5803

| | |
|---|---|
| In re Application of<br>BARJOAN, et al.<br>Application No.: 10/527,127<br>PCT No.: PCT/IB03/03536<br>Int. Filing Date: 05 August 2003<br>Priority Date: 07 August 2002<br>Atty. Docket No.: 932.1287<br>For: PROCESS FOR PREPARING ZOLMITRIPTAN COMPOUNDS | DECISION ON PETITION<br><br>UNDER 37 CFR 1.137(b) |

The petition to revive under 37 CFR 1.137(b) filed 08 March 2005 in the above-captioned application is hereby **GRANTED** as follows:

Applicant's statement that "The entire delay in failing to furnish to the U.S. Patent & Trademark Office ("PTO") the documents required for entering the national stage and obtain an examination as to the patentability of the invention in the U.S. was unintentional" and the prompt filing of the petition satisfies the requirement of 37 CFR 1.137(b)(3). A review of the application file reveals that applicant has now provided payment of the full, U.S. Basic National Fee. Therefore, the request to revive the application abandoned under 35 U.S.C. 371(d) is granted as to the National stage in the United States of America. Further, a review of the application file reveals that all of the requirements of 35 U.S.C. 371 for entry into the national stage in the United States have been satisfied.

The application has an international filing date of 05 August 2003 under 35 U.S.C. 363 and will be given a date of **08 March 2005** under 35 U.S.C. 371(c)(1), (c)(2) and (c)(4). As authorized, the $130.00 surcharge for providing an executed oath or declaration of the inventors later than thirty months form the priority date will be charged to Deposit Account No.: 50-0518.

This application is being returned to the United States Designated/Elected Office (DO/EO/US) for treatment in accordance with this decision.

Derek A. Putonen
Attorney Advisor
Office of PCT Legal Administration
Tel: (571) 272-3294
Fax: (571) 273-0459

27 SEP 2005

UNITED STATES PATENT AND TRADEMARK OFFICE

Commissioner for Patents
United States Patent and Trademark Office
P.O. Box 1450
Alexandria, VA 22313-1450
www.uspto.gov

NIXON & VANDERHYE, PC
1100 North Glebe Road, 8th Floor
Arlington, VA 22201-4714

| | | |
|---|---|---|
| In re Application of: | : | |
| HARDWICK, Andrew, John, et al. | : | DECISION ON PETITION FOR |
| U.S. Application No.: 10/527,134 | : | REVIVAL OF ABANDONED |
| PCT No.: PCT/GB03/02781 | : | APPLICATION UNDER |
| International Filing Date: 26 June 2003 | : | 37 CFR 1.137(b) |
| Priority Date: 26 June 2002 | : | |
| Attorney's Docket No.: 36-1890 | : | |
| For: HAPTIC COMMUNICATIONS | : | |
| | : | |

The petition for revival under 37 CFR 1.137(b) filed 08 March 2005 in the above-captioned application is hereby **GRANTED** as follows:

Applicants' statements that "the above identified National Phase of PCT/GB2003/002781 was unintentionally abandoned by virtue of the failure to timely file a declaration and pay the filing fee. ... The delay in prosecuting the case (i.e. filing the declaration and paying the filing fee) was unintentional" is construed as the statement required under 37 CFR 1.137(b)(3), that is, a statement that "the entire delay in filing the required reply from the due date for the required reply until the filing of a grantable petition under 37 CFR 1.137(b) was unintentional." If this is not a proper interpretation of applicants' statement, applicants **must** inform this Office immediately. Based on the above, the requirement of 37 CFR 1.137(b)(3) is considered satisfied.

Applicants have now submitted the basic national fee, and the requirements of 37 CFR 1.137(b) have been satisfied. Therefore, the request to revive the application is granted as to the national stage in the United States of America.

The 08 March 2005 submission included an executed declaration. However, this declaration is not in compliance with 37 CFR 1.497. Specifically, the declaration appears to be a compilation; two copies of the same signature page (one executed by each of the two inventors named thereon) has apparently been combined with a single copy of the first page of the declaration. Such compilation is impermissible (see MPEP § 201.03, page 200-7: "Where individual declarations are executed, they must be submitted as individual declarations rather than combined into one declaration"). Accordingly, a declaration in compliance with 37 CFR 1.497 is still required.

This application is being returned to the National Stage Processing Division of the Office of PCT Operations for further processing in accordance with this decision, including the mailing

of a Notification Of Missing Requirements (Form PCT/DO/EO/905) indicating that an oath or declaration in compliance with 37 CFR 1.497 and additional fees (i.e., the surcharge for late filing of the oath or declaration, the search fee, and examination fee) are required.

Richard M. Ross
PCT Petitions Attorney
Office Of PCT Legal Administration
Telephone: (571) 272-3296
Facsimile: (571) 273-0459

UNITED STATES PATENT AND TRADEMARK OFFICE

Commissioner for Patents
United States Patent and Trademark Office
Washington, D.C. 20231
www.uspto.gov

12 JUL 2006

Mitchell W. Shapiro
Miles & Stockbridge, P.C.
1751 Pinnacle Drive, Suite 500
McLean, VA 22102-3833

| | | |
|---|---|---|
| In re Application of | : | |
| ALI, et al. | : | DECISION ON PETITION |
| Serial No.: 10/527,167 | : | |
| PCT No.: PCT/GB03/03903 | : | UNDER 37 CFR 1.47(a) |
| Int. Filing Date: 09 September 2003 | : | |
| Priority Date: 10 September 2002 | : | |
| Atty Docket No.: XA-10290 | : | |
| For: CLAMPING APPARATUS FOR ADJUSTABLE | : | |
| STEERING COLUMN FOR A VEHICLE | : | |

This decision is in response to applicant's "PETITION UNDER 37 C.F.R. § 1.47" filed 06 March 2006 in the United States Patent and Trademark Office (USPTO) to accept the application without the signature of co-inventor Mohammed Ali.

## BACKGROUND

On 09 September 2003, applicant filed international application PCT/GB03/03903, which claimed priority of an earlier application filed 10 September 2002. A copy of the international application was communicated to the United States Patent and Trademark Office from the International Bureau on 25 March 2004. Pursuant to 37 CFR 1.495, the thirty-month period for paying the basic national fee in the United States expired at midnight on 10 March 2005.

On 09 March 2005, applicant filed a transmittal letter for entry into the national stage in the United States, which was accompanied by the requisite basic national fee as required by 35 U.S.C. 371(c)(1); a preliminary amendment, and an Information Disclosure Statement.

On 28 July 2005, applicant was mailed a "NOTIFICATION OF MISSING REQUIREMENTS UNDER 35 U.S.C. 371" (Form PCT/DO/EO/905) informing applicant of the need to provide an oath or declaration of the inventors, in compliance with 37 CFR 1.497(a) and (b), identifying the application by the International application number and international filing date. Applicant was afforded two months to file the proper reply and informed that this period could be extended pursuant to 37 CFR 1.136(a).

On 28 December 2005, applicant filed a declaration executed by co-inventor Moriyama accompanied by authorization to charge any necessary extension of time payments.

On 06 February 2006, applicant was mailed a "NOTIFICATION OF DEFECTIVE RESPONSE" (Form PCT/DO/EO/916) informing applicant that the filed declaration did not comply 37 CFR 1.497 (a) and (b) and thus was not a proper response to the Form PCT/DO/EO/905 mailed 28 December 2005. Applicant was afforded one month from the mailing of the Form PCT/DO/EO/916 or within the time remaining in the response set forth in the Form PCT/DO/EO/905, whichever was longer.

On 06 March 2006, applicant filed the present petition under 37 CFR 1.47(a) to accept the application without the signature of co-inventor Mohammed Ali.

## DISCUSSION

A petition under 37 CFR 1.47(a) must be accompanied by (1) the fee under 37 CFR 1.17(g), (2) factual proof that the missing joint investor refuses to execute the application or cannot be reached after diligent effort, (3) a statement of the last known address of the missing inventor, and (4) an oath or declaration by each 37 CFR 1.47(a) applicant on his or her own behalf and on behalf of the non-signing joint inventor. Applicant has satisfied items1, 3 and 4.

As to item (2), as stated in the Manual of Patent Examination Procedure (MPEP), Section 409.03(d) Proof of Unavailability or Refusal, "Before a refusal can be alleged, it must be demonstrated that a *bona fide* attempt was made to present a copy of the application papers (specification, including claims, drawings, and oath or declaration) to the non-signing inventor for signature." 409.03(d) also states that:

Where a refusal of the inventor to sign the application papers is alleged, the circumstances of the presentation of the application papers and of the refusal must be specified in a statement of facts by the person who presented the inventor with the application papers and/or to whom the refusal was made. Statements by a party not present when an oral refusal is made will not be accepted.

Proof that a *bona fide* attempt was made to present a copy of the application papers (specification, including claims, drawings, and oath or declaration) to the nonsigning inventor for signature, but the inventor refused to accept delivery of the papers or expressly stated that the application papers should not be sent, may be sufficient. When there is an express oral refusal, that fact along with the time and place of the refusal must be stated in the statement of facts.

In the present case, applicant has provided a declaration from Mr. Laurence Barton detailing his attempts to obtain the signature of inventor Ali. Mr. Barton states that the inventor ultimately refused to accept the papers and stated that he would not sign the declaration. However, applicant has not included any of the noted text messages sent from Mr. Barton nor other evidence that would show that Mr. Ali knew specifically which invention was being discussed when he refused to accept the papers or sign the declaration. In a situation such as this where applicant is seeking to proceed on the basis of an oral refusal combined with non-receipt of a complete set of the application papers, applicant must provide a showing that the inventor

was aware of the particulars of what he was being asked to sign.

In light of the above, it is not possible to grant applicant's petition at this time.

## CONCLUSION

For the reasons stated above, applicant's petition under 37 CFR 1.47(a) is **DISMISSED**.

Any reconsideration on the merits of this petition must be filed within **TWO (2) MONTHS** from the mail date of this decision. Any reconsideration request should include a cover letter entitled "Renewed Petition Under 37 CFR 1.47(a)." No additional petition fee is required. Extensions of time may be obtained under 37 CFR 1.136(a).

Any further correspondence with respect to this matter should be directed to Mail Stop PCT, Commissioner for Patents, Office of PCT Legal Administration, P.O. Box 1450, Alexandria, Virginia 22313-1450, with the contents of the letter marked to the attention of the Office of PCT Legal Administration.

Derek A. Putonen
Attorney Advisor
Office of PCT Legal Administration
Tel: 571-272-3294
Fax: 571-273-0459

27 FEB 2007

UNITED STATES PATENT AND TRADEMARK OFFICE

Commissioner for Patents
United States Patent and Trademark Office
P.O. Box 1450
Alexandria, VA 22313-1450
www.uspto.gov

Mitchell W. Shapiro
Miles & Stockbridge, P.C.
1751 Pinnacle Drive, Suite 500
McLean, VA 22102-3833

| | | |
|---|---|---|
| In re Application of | : | |
| ALI, et al. | : | |
| U.S. Application No.: 10/527,167 | : | DECISION ON RENEWED |
| PCT No.: PCT/GB03/03903 | : | |
| Int. Filing Date: 09 September 2003 | : | PETITION UNDER |
| Priority Date: 10 September 2002 | : | |
| Attorney Docket No.: XA-10290 | : | 37 CFR 1.47(a) |
| For: CLAMPING APPARATUS FOR ADJUSTABLE | : | |
| STEERING COLUMN FOR A VEHICLE | : | |

This decision is in response to the applicant's "Renewed Petition Under 37 C.F.R. §1.47 (a)" filed 12 February 2007 in the United States Patent and Trademark Office (UPSTO) to accept the application without the signature of co-inventor Mohammed Ali.

## BACKGROUND

On 12 July 2006, applicant was mailed a decision dismissing applicant's petition under 37 CFR 1.47(a). Applicant was afforded two months to file any request for reconsideration and advised that this time period could be extended pursuant to 37 CFR 1.136(a).

On 12 February 2007, applicant filed the present renewed petition. As authorized, the five-month extension of time fee will be charged to deposit account no. 50-1165. Applicant's response is thus considered timely filed.

## DISCUSSION

As detailed in the decision mailed 12 July 2006, a petition under 37 CFR 1.47(a) must be accompanied by (1) the fee under 37 CFR 1.17(g), (2) factual proof that the missing joint investor refuses to execute the application or cannot be reached after diligent effort, (3) a statement of the last known address of the missing inventor, and (4) an oath or declaration by each 37 CFR 1.47(a) applicant on his or her own behalf and on behalf of the non-signing joint inventor. Applicant previously satisfied items (1), (3) and (4) above.

With the filing of the present renewed petition and supporting documentation, applicant has satisfied all of the concerns raised in the decision of 12 July 2006 and it is proper to grant applicant's renewed petition at this time. Specifically, applicant has provided an additional statement from Mr. Laurence Barton showing that the inventor was aware of the particular invention at issue when he refused to accept the application papers or sign the declaration. As

such, it is proper to grant applicant's renewed petition at this time.

## CONCLUSION

For the reasons discussed above, applicant's renewed petition under 37 CFR 1.47(a) is **GRANTED**.

The application has an international filing date of 09 September 2003 under 35 U.S.C. 363, and will be given a date of **28 December 2005** under 35 U.S.C. 371(c)(1), (c)(2) and (c)(4).

As provided in 37 CFR 1.47(c), a notice of the filing of this application will be forwarded to the non-signing inventors at their last known addresses of record. A notice of the filing of the application under 37 CFR 1.47(a) will be published in the Official Gazette.

This application is being returned to the DO/EO/US for processing in accordance with this decision.

Derek A. Putonen
Attorney Advisor
Office of PCT Legal Administration
Tel: (571) 272-3294
Fax: (571) 273-0459

02/27/2007 SBASHEIR 00000001 501165 10527167
Sale Ref: 00000001 DAH: 501165 10527167
01 FC:1255 2160.00 DA

28 APR 2006

UNITED STATES PATENT AND TRADEMARK OFFICE

Commissioner for Patents
United States Patent and Trademark Office
P.O. Box 1450
Alexandria, VA 22313-1450
www.uspto.gov

Richard P. Ferrara
Fish & Richardson, P.C.
Citigroup Center 52nd Floor
153 East 53rd Street
New York, NY 10022-4611

| | | |
|---|---|---|
| In re Application of | : | |
| GRONWALL | : | |
| U.S. Application No.: 10/527,177 | : | DECISION ON REQUEST |
| PCT No.: PCT/SE03/01405 | : | |
| Int. Filing Date: 10 September 2003 | : | UNDER 37 CFR 1.42 |
| Priority Date: 10 September 2002 | : | |
| Attorney Docket No.: 09546-023US1/55530 US SB/MW | : | |
| For: A PLATE HEAT EXCHANGER | : | |

This decision is in response to applicant's "Response to Notification of Missing Requirements" filed in the United States Patent and Trademark Office (USPTO) on 23 August 2005. The response is being treated as a request for status under 37 CFR §1.42. No petition fee is due.

## BACKGROUND

On 10 September 2003, applicant filed international application PCT/SE03/01405 which claimed priority to an earlier application filed 10 September 2002. Pursuant to 37 CFR 1.495, the thirty-month period for paying the basic national fee in the United States expired at midnight on 10 March 2005.

On 07 March 2005, applicant filed a transmittal letter for entry into the national stage in the United States which was accompanied by the requisite basic national fee as required by 35 U.S.C. 371(c)(1) and a preliminary amendment.

On 12 July 2005, applicant was mailed a "NOTIFICATION OF MISSING REQUIREMENTS UNDER 35 U.S.C. 371" (Form PCT/DO/EO/905) informing applicant of the need to provide an oath or declaration of the inventor, in compliance with 37 CFR 1.497(a) and (b), identifying the application by the international application number and international filing date. Applicant was afforded two months to file the proper reply and informed that this period could be extended pursuant to 37 CFR 1.136(a).

On 23 August 2005, applicant filed the present response.

## DISCUSSION

Pursuant to 37 CFR 1.42, first sentence:

"In case of the death of the inventor, the legal representative (executor, administrator, etc.) of the deceased inventor may make the necessary oath or declaration, and apply for and obtain a patent."

The declaration filed 23 August 2005 is executed by Kristina Gronwall as the sole heir to estate of deceased inventor, Jan Gronwall. The declaration provides the residence, post office address and country of citizenship for both the deceased inventor and his heir. Ms. Gronwall states that no legal representative of Jan Gronwall's estate has been appointed or is statutorily required to be appointed. Therefore, it is proper to grant applicant's request for status under 37 CFR 1.42 at this time.

## CONCLUSION

Applicant's request for status of papers under 37 CFR 1.42 is **GRANTED**.

This application will be given an international application filing date of 10 September 2003 and a date of **23 August 2005** under 35 U.S.C. 371(c)(1), (c)(2) and (c)(4).

This application is being returned to the DO/EO/US for processing in accordance with this decision.

Derek A. Putonen
Attorney Advisor
Office of PCT Legal Administration
Tel: (571) 272-3294
Fax: (571) 273-0459

UNITED STATES PATENT AND TRADEMARK OFFICE

#4

17 FEB 2006

Commissioner for Patents
United States Patent and Trademark Office
P.O. Box 1450
Alexandria, VA 22313-1450
www.uspto.gov

Albert Josif
DR. MODIANO & ASSOCIATI S.p.A.
Via Meravigli 16
Milan 20123
ITALY

| | |
|---|---|
| In re Application of: | |
| MATTIOLI, Alessandro | DECISION ON PETITION |
| U.S. Application No.: 10/527,194 | |
| PCT No.: PCT/IT03/00061 | |
| International Filing Date: 10 February 2003 | |
| Priority Date: 08 February 2002 | |
| Atty Docket No.: 41393-JDV-rf | |
| For: NECKTIE WITH THREE OR MORE PARTS IN SIGHT AND KNOT WITH TWO OR MORE FABRIC FILMS | |

This decision is issued in response to the "Petition To Withdraw Holding Of Abandonment Under 37 CFR 1.181(a) and MPEP 711.03(c)(I)" filed 09 November 2005. No petition fee is required.

## BACKGROUND

On 10 February 2003, applicant filed international application PCT/IT03/00061 that claimed a priority date of 08 February 2002 and designated the United States. On 14 August 2003, a copy of the international application was communicated to the United States Patent And Trademark Office (USPTO) by the International Bureau (IB). The deadline for submission of the basic national fee was thirty months from the priority date, i.e., 09 August 2004 (08 August 2004 was a Sunday).

On 05 August 2004, applicants filed a Transmittal Letter for entry into the national stage in the United States accompanied by, among other materials, a copy of the international application. The submission did not include payment of the national fee; rather, the transmittal letter indicated that the basic national fee was being paid by wire transfer.

On 13 September 2005, the United States Designated/Elected Office (DO/EO/US) mailed a Notification Of Abandonment (Form PCT/DO/EO/909) indicating that the application was abandoned for failure to provide the "full U.S. Basic National Fee by 30 months."

On 09 November 2005, the petition considered herein was filed. The petition asserts that applicants' wire transfer of the basic national fee was made on 09 August 2005, prior to

expiration of the thirty-month deadline, and that the holding of abandonment should therefore be withdrawn.

## DISCUSSION

As with any materials filed in the USPTO, the filing date accorded to a fee payment is the date the USPTO receives such fee payment (see 37 CFR 1.6). Here, USPTO records indicate that the wire transfer of the basic national fee was not received by the USPTO until 11 August 2005. Thus, regardless of when applicant initiated the wire transfer, the basic national fee was paid on 11 August 2005. This payment date is after the expiration of the thirty-month deadline at midnight on 09 August 2004.

Pursuant to 37 CFR 1.495(h), the failure to timely pay the basic national fee results in the abandonment of the application with respect to the United States. The Notification of Abandonment mailed herein on 13 September 2005 was therefore proper. Withdrawal of the Notification Of Abandonment on the present record would be inappropriate.

## CONCLUSION

The petition to withdraw the holding of abandonment is **DISMISSED** without prejudice.

The present application remains abandoned with respect to the United States of America.

If reconsideration on the merits of the petition is desired, a proper response must be filed within **TWO (2) MONTHS** of the mail date of the present decision. Any request for reconsideration should include a cover letter entitled "Renewed Petition Under 37 CFR 1.181" and must include an adequate showing that the payment of the basic national fee was received by the USPTO prior to the expiration of the thirty-month deadline at midnight on 09 August 2004.

Please direct further correspondence with respect to this petition to Mail Stop PCT, Commissioner for Patents, P.O. Box 1450, Alexandria, Virginia 22313-1450, with the contents of the letter marked to the attention of the Office of PCT Legal Administration.

Richard M. Ross
PCT Petitions Attorney
Office of PCT Legal Administration
Telephone: (571) 272-3296
Facsimile: (571) 273-0459

20 APR 2006

#6

UNITED STATES PATENT AND TRADEMARK OFFICE

Commissioner for Patents
United States Patent and Trademark Office
P.O. Box 1450
Alexandria, VA 22313-1450
www.uspto.gov

Albert Josif
DR. MODIANO & ASSOCIATI S.p.A.
Via Meravigli 16
Milan 20123
ITALY

| | |
|---|---|
| In re Application of: MATTIOLI, Alessandro<br>U.S. Application No.: 10/527,194<br>PCT No.: PCT/IT03/00061<br>International Filing Date: 10 February 2003<br>Priority Date: 08 February 2002<br>Atty Docket No.: 41393-JDV-rf<br>For: NECKTIE WITH THREE OR MORE PARTS IN SIGHT AND KNOT WITH TWO OR MORE FABRIC FILMS | DECISION ON PETITION |

The petition for revival under 37 CFR 1.137(b) filed 07 April 2006 in the above-captioned application is hereby **GRANTED** as follows:

Applicant's statement that "the entire delay in filing the required reply from the due date for the required reply until the filing of a grantable petition under 37 CFR 1.137(b) was unintentional" satisfies the requirements of 37 CFR 1.137(b)(3).

Applicant has previously submitted the basic national fee, and the requirements of 37 CFR 1.137(b) have been satisfied. Therefore, the request to revive the application is granted as to the national stage in the United States of America.

This application is being referred to the National Stage Processing Division of the Office of PCT Operations for further processing in accordance with this decision. The date under 35 U.S.C. 371(c)(1), (c)(2), and (c)(4) is 11 August 2004.[1]

Richard M. Ross
Attorney Advisor
Office of PCT Legal Administration
Telephone: (571) 272-3296
Facsimile: (571) 273-0459

[1] 11 August 2004 is the date on which the USPTO received the wire transfer payment of the basic national fee. Due to a typographical error, the previous decision herein (mailed 17 February 2006) incorrectly identified the receipt date of this payment as 11 August 2005. It is noted that correction of this typographical error does not effect the prior decision's conclusion that the basic national fee was paid after expiration of the thirty-month deadline on 09 August 2004.

BEST AVAILABLE COPY

UNITED STATES PATENT AND TRADEMARK OFFICE

Commissioner for Patents
United States Patent and Trademark Office
P.O. Box 1450
Alexandria, VA 22313-1450
www.uspto.gov

**Nixon & Vanderhye, PC**
**901 North Glebe Road, 11th Floor**
**Arlington, VA 22203**

**COPY MAILED**

JUL 0 6 2009

**OFFICE OF PETITIONS**

| | | |
|---|---|---|
| In re Application of | : | |
| Alessandro Matioli | : | |
| Application No. 10/527,194 | : | DECISION ON PETITION |
| Filed: August 11, 2004 | : | TO WITHDRAW |
| Attorney Docket No. 4017-64 | : | FROM RECORD |
| | : | |

This is a decision on the Request to Withdraw as attorney or agent of record under 37 C.F.R. § 1.36(b), filed May 28, 2009.

The request is **NOT APPROVED.**

A grantable request to withdraw as attorney/agent of record must be signed by every attorney/agent seeking to withdraw or contain a clear indication that one attorney is signing on behalf of another/others. The Office requires the practitioner(s) requesting withdrawal to certify that he, she, or they have: (1) given reasonable notice to the client, prior to the expiration of the response period, that the practitioner(s) intends to withdraw from employment; (2) delivered to the client or a duly authorized representative of the client all papers and property (including funds) to which the client is entitled; and (3) notified the client of any responses that may be due and the time frame within which the client must respond, pursuant 37 CFR 10.40(c).

The request cannot be approved because there is no indication that the acts noted in the above-identified certifications have been performed. Refer to Form No. PTO/SB/83 (Updated 4/2008).

All future communications from the Office will continue to be directed to the above-listed address until otherwise notified by applicant.

Telephone inquiries concerning this decision should be directed to the undersigned at 571-272- 6735.

Kimberly Inabinet
Petitions Examiner
Office of Petitions

cc: Alessandro Mattioli
Via Dante 16
Zola Predosa-Bologna, Italy 40069

UNITED STATES PATENT AND TRADEMARK OFFICE

Commissioner for Patents
United States Patent and Trademark Office
P.O. Box 1450
Alexandria, VA 22313-1450
www.uspto.gov

COPY MAILED

DEC 1 4 2009

OFFICE OF PETITIONS

NIXON & VANDERHYE, PC
901 NORTH GLEBE ROAD, 11TH FLOOR
ARLINGTON, VA 22203

| | | |
|---|---|---|
| In re Application of | : | |
| Alessandro Mattioli | : | |
| Application No. 10/527,194 | : | DECISION ON PETITION |
| Filed: August 11, 2004 | : | |
| Attorney Docket No. 4017-64 | : | |

This is a decision on the petition, filed October 5, 2009, which is being treated as a petition under 37 CFR 1.8(b), requesting withdrawal of the holding of abandonment in the above-identified application.

The petition is **GRANTED**.

This application was held abandoned for failure to timely respond to the Office action of April 28, 2009, which set a one (1) month or 30 days period for reply. Five (5) month extension of time pursuant to the provisions of 37 CFR 1.136(a) was obtained. Accordingly, a reply was due on or before October 28, 2009.

Office record show a timely reply was received under 37 CFR 1.8 on October 28, 2009, which included the following papers: amendment to the claims; remarks/arguments and five month (5) extension of time.

The petition satisfies the above requirements of 37 CFR 1.8(b). Accordingly, the holding of abandonment for failure to timely file a reply to the Office action of April 28, 2009 is hereby withdrawn and the application restored to pending status.

This application is being referred to Technology Center AU 3765 for appropriate action in the normal course of business on the reply received on April 28, 2009.

Irvin Dingle
Petitions Examiner
Office of Petitions

UNITED STATES PATENT AND TRADEMARK OFFICE

Commissioner for Patents
United States Patent and Trademark Office
P.O. Box 1450
Alexandria, VA 22313-1450
www.uspto.gov

**NIXON & VANDERHYE, PC**
**901 NORTH GLEBE ROAD, 11TH FLOOR**
**ARLINGTON VA 22203**

MAILED

APR 12 2010

OFFICE OF PETITIONS

In re Application of
Alessandro Mattioli
Application No. 10/527,194
Filed: August 11, 2004
Attorney Docket No. 4017-64

DECISION ON PETITION
TO WITHDRAW
FROM RECORD

This is a decision on the renewed Request to Withdraw as attorney or agent of record under 37 C.F.R. § 1.36(b), filed March 19, 2010.

The request is **APPROVED**.

A grantable request to withdraw as attorney/agent of record must be signed by every attorney/agent seeking to withdraw or contain a clear indication that one attorney is signing on behalf of another/others. A request to withdraw will not be approved unless at least 30 (thirty) days would remain between the date of approval and the later of the expiration date of a time to file a response or the expiration date of the maximum time period which can be extended under 37 C.F.R. § 1.136(a).

The request was signed by Paul T. Bowen on behalf of all attorneys/agents associated with customer number 23117. All attorneys/agents associated with customer number 23117 have been withdrawn.

Applicant is reminded that there is no attorney of record at this time.

The correspondence address has been changed and is copied below.

Telephone inquiries concerning this decision should be directed to Kimberly Inabinet at 571-272-4618.

/Kimberly Inabinet/

Kimberly Inabinet
Petitions Examiner
Office of Petitions

cc: Alessandro Mattioli
Via Dante 16
Zola Predosa-Bologna
ITALY 40069

UNITED STATES PATENT AND TRADEMARK OFFICE

UNITED STATES DEPARTMENT OF COMMERCE
United States Patent and Trademark Office
Address: COMMISSIONER FOR PATENTS
P.O. Box 1450
Alexandria, Virginia 22313-1450
www.uspto.gov

| APPLICATION NUMBER | FILING OR 371(C) DATE | FIRST NAMED APPLICANT | ATTY. DOCKET NO./TITLE |
|---|---|---|---|
| 10/527,194 | 08/11/2004 | Alessandro Mattioli | 4017-64 |

**CONFIRMATION NO. 5845**

**POWER OF ATTORNEY NOTICE**

23117
NIXON & VANDERHYE, PC
901 NORTH GLEBE ROAD, 11TH FLOOR
ARLINGTON, VA 22203

*OC000000041079706*

Date Mailed: 04/12/2010

## NOTICE REGARDING CHANGE OF POWER OF ATTORNEY

This is in response to the Power of Attorney filed 03/19/2010.

- The withdrawal as attorney in this application has been accepted. Future correspondence will be mailed to the new address of record. 37 CFR 1.33.

/kainabinet/

---

Office of Data Management, Application Assistance Unit (571) 272-4000, or (571) 272-4200, or 1-888-786-0101

2 8 NOV 2006

UNITED STATES PATENT AND TRADEMARK OFFICE

Commissioner for Patents
United States Patent and Trademark Office
P.O. Box 1450
Alexandria, VA 22313-1450
www.uspto.gov

PHILLIPS LYTLE LLP
Intellectual Property Group
3400 HSBC Center
Buffalo, NY 14203-3509

| | | |
|---|---|---|
| In re Application of: | : | |
| MURRENHOFF, Hubertus, et al. | : | DECISION ON PETITION TO |
| U.S. Application No.: 10/527,204 | : | WITHDRAW HOLDING OF |
| PCT No.: PCT/EP2003/008550 | : | ABANDONMENT |
| International Filing Date: 01 August 2003 | : | (37 CFR 1.181) |
| Priority Date: 11 September 2002 | : | |
| Atty Docket No.: Moog Gmbh - Murrenhoff | : | |
| For: VALVE WITH INCRESED | : | |
| DYNAMIC RESPONSE | : | |

This decision is issued in response to the "Petition For Revival Of An Application For Patent Abandoned Unavoidably Under 37 CFR 1.137(a)" filed 16 October 2006, treated herein as a petition under 37 CFR 1.181 to withdraw the holding of abandonment based on applicants' purported failure to receive the Notification Of Missing Requirements (Form PCT/DO/EO/905) mailed 16 August 2005. No petition fee is required.[1]

## BACKGROUND

On 01 August 2003, applicants filed international application PCT/EP2003/008550. The international application claimed a priority date of 11 September 2002, and it designated the United States. On 22 April 2004, the International Bureau (IB) communicated a copy of the international application to the United States Patent and Trademark Office (USPTO). The deadline for submission of the basic national fee was thirty months from the priority date, i.e., 11 March 2005.

On 10 March 2005, applicants filed a Transmittal Letter for entry into the national stage in the United States accompanied by, among other materials, payment of the basic national fee and a translation of the international application into English.

On 01 August 2005, applicants filed a status inquiry with respect to the application.

On 16 August 2005, the United States Designated/Elected Office (DO/EO/US) mailed a Notification Of Missing Requirements (Form PCT/DO/EO/905) indicating that a declaration acceptable under 37 CFR 1.497 and the surcharge for filing the declaration later than thirty months after the priority date were required.

[1] The $500 petition fee filed with the present petition will be refunded to counsel's Deposit Account.

On 04 November 2005, applicants filed a second status inquiry.

On 12 May 2006, applicants filed a third status inquiry.

On 08 August 2006, the DO/EO/US mailed a "Notification Of Abandonment" (Form PCT/DO/EO/909) indicating that the application was abandoned for failure to file a response to the Notification Of Missing Requirements mailed 16 August 2005.

On 16 October 2006, applicants filed the "Petition For Revival Of An Application For Patent Abandoned Unavoidably Under 37 CFR 1.137(a)" considered herein under 37 CFR 1.181. The petition asserts that applicants did not receive the Notification of Missing Requirements mailed 16 August 2005, and that abandonment of the application for failure to respond to such Notification is therefore improper.

## DISCUSSION

Applicants filed the present petition under 37 CFR 1.137(a); however, where an applicant seeks withdrawal of a holding of abandonment based on the failure to receive an Office communication, a petition under 37 CFR 1.137(a) is not required. Rather, a petition under 37 CFR 1.181 is appropriate.

Section 711.03(c)II of the MPEP sets forth the requirements for such a petition, as follows:

> The showing required to establish nonreceipt of an Office communication must include a statement from the practitioner stating that the Office communication was not received by the practitioner and attesting to the fact the a search of the file jacket and docket records indicates that the Office communication was not received. A copy of the docket record where the nonreceived Office communication would have been entered had it been received and docketed must be attached to and referenced in practitioner's statement. For example, if a three month period for reply was set in the nonreceived Office action, a copy of the docket report showing all replies docketed for a date three months from the mail date of the nonreceived Office action must be submitted as documentary proof of nonreceipt of the Office action.

The present petition includes the required statement from practitioner Peter K. Sommer that the Notification Of Missing Requirements was not received by applicant. However, the petition does not include the additional required statement from the practitioner that "a search of the file jacket and docket records" confirms that the Notification of Missing Requirements was not received.

With respect to the docket records' requirement, the present petition does not include the required docket records for counsel's firm listing all replies due in the Office on 17 October

2005, the date on which a response to the Notification Of Missing Requirements was due (16 October 2005, the actual two-month response deadline, was a Sunday).

Based on the above, applicants have not satisfied the requirements for a petition to confirm the failure to receive an Office communication. Accordingly, on the present record, it cannot be concluded that applicants did not receive the Notification Of Missing Requirements mailed 16 August 2005. Withdrawal of the holding of abandonment is therefore not appropriate at this time.

It is noted that applicants' 16 October 2006 submission included the executed declaration and surcharge payment required by the Notification Of Missing Requirements.

## CONCLUSION

Applicants' petition for withdrawal of the holding of abandonment under 37 CFR 1.181 is **DISMISSED** without prejudice. The application remains abandoned.

If reconsideration on the merits of the petition is desired, a proper response must be filed within **TWO (2) MONTHS** of the mail date of the present decision. Any request for reconsideration should include a cover letter entitled "Renewed Petition Under 37 CFR 1.181" and must include the required additional statement from the practitioner's and the proper docket records, as discussed above and in the MPEP.

The $500 petition fee included with the present submission will be refunded to Deposit Account No. 19-3320.

Please direct further correspondence with respect to this matter to Mail Stop PCT, Commissioner for Patents, P.O. Box 1450, Alexandria, Virginia 22313-1450, with the contents of the letter marked to the attention of the Office of PCT Legal Administration.

Richard M. Ross
Attorney Advisor
Office of PCT Legal Administration
Telephone: (571) 272-3296
Facsimile: (571) 273-0419

Repln. Ref: 11/28/2006 SBASHEIR 0015563000
DA#:193320 Name/Number:10527204
FC: 9204 $500.00 CR

UNITED STATES PATENT AND TRADEMARK OFFICE

Commissioner for Patents
United States Patent and Trademark Office
P.O. Box 1450
Alexandria, VA 22313-1450
www.uspto.gov

14 DEC 2006

PHILLIPS LYTLE LLP
Intellectual Property Group
3400 HSBC Center
Buffalo, NY 14203-3509

| | | |
|---|---|---|
| In re Application of: | : | |
| MURRENHOFF, Hubertus, et al. | : | DECISION ON RENEWED |
| U.S. Application No.: 10/527,204 | : | PETITION TO WITHDRAW |
| PCT No.: PCT/EP2003/008550 | : | HOLDING OF ABANDONMENT |
| International Filing Date: 01 August 2003 | : | (37 CFR 1.181) |
| Priority Date: 11 September 2002 | : | |
| Atty Docket No.: Moog Gmbh - Murrenhoff | : | |
| For: VALVE WITH INCRESED | : | |
| DYNAMIC RESPONSE | : | |

In a decision mailed by this Office on 28 November 2006, applicants' petition to withdraw the holding of abandonment herein was dismissed without prejudice for failure to satisfy the requirements of a grantable petition. Specifically, applicants had not provided the statements and docket records required for a grantable petition to confirm that applicants did not receive the Notification Of Missing Requirements (Form PCT/DO/EO/905) mailed 16 August 2005.

On 04 December 2006, applicants filed the renewed petition considered herein. The renewed petition includes the required statements from the practitioner that the Notification Of Missing Requirements was not received and that a search of the file jacket and the docket records indicates that the Notification Of Missing Requirements was not received. The submission also includes the required docket records. Applicants have now satisfied all the requirements for a grantable petition to withdraw the holding of abandonment based on applicants' failure to receive the Notification Of Missing Requirements (Form PCT/DO/EO/905) mailed 16 August 2005.

The renewed petition for withdrawal of the holding of abandonment is **GRANTED**.

The Notification Of Abandonment (Form PCT/DO/909) mailed 08 August 2006, based as it was on applicants' failure to respond to the Notification Of Missing Requirements that applicants did not receive, is appropriately **VACATED**.

It is noted that the previous decision stated that applicants' 16 October 2006 submission included the executed declaration and surcharge payment required by the Notification Of Missing Requirements. However, on further review, it has been determined that the 16 October 2006 submission did not include payment of the required $130 surcharge. Accordingly, payment of this surcharge is still required.

The application is being referred to the National Stage Processing Branch of the Office Of PCT Operations for further processing in accordance with this decision, including the mailing of a new Notification Of Missing Requirements (Form PCT/DO/EO/905) requiring submission of the $130 surcharge for failure to submit the declaration within thirty months of the priority date.

Richard M. Ross
Attorney Advisor
Office of PCT Legal Administration
Telephone: (571) 272-3296
Facsimile: (571) 273-0459

22 DEC 2006

UNITED STATES PATENT AND TRADEMARK OFFICE

Commissioner for Patents
United States Patent and Trademark Office
P.O. Box 1450
Alexandria, VA 22313-1450
www.uspto.gov

Cognis Corporation
Patent Department
300 Brookside Avenue
Ambler, PA 19002

| | | |
|---|---|---|
| In re Application of<br>MUELLER et al.<br>U.S. Application No. 10/527,212<br>PCT No.: PCT/EP03/09981<br>Int. Filing Date: 09 September 2003<br>Priority Date: 18 September 2002<br>Attorney Docket No.: C 2341 PCT/US<br>For: BOREHOLE TREATMENT AGENT CONTAINING LOW-TOXIC OIL PHASE | : | DECISION ON REQUEST |

This decision is issued in response to applicants' "Request for Correction of Inventorship" filed 31 March 2006, which is being treated as a Request under 37 CFR 1.497(d). The $130 petition fee will be charged to Deposit Account no. 50-1177.

## BACKGROUND

On 09 September 2003, applicants filed international application no. PCT/EP03/09981 which claimed a priority date of 18 September 2002. The international application named Heinz Mueller as applicant/inventor. Pursuant to 37 CFR 1.495, the deadline for payment of the basic national fee in the United States was to expire 30 months from the priority date, 18 March 2005.

On 10 March 2005, applicants filed a transmittal letter for entry into the national stage accompanied by, *inter alia:* the requisite basic national fee; a copy of the international application; and a preliminary amendment.

On 28 September 2005, the United Stated Designated/Elected Office mailed a Notification of Missing Requirements (Form PCT/DO/EO/905) indicating that an oath or declaration in compliance with 37 CFR 1.497(a) and (b) must be filed. The notification set a two-month time limit in which to respond.

On 28 November 2005, applicants filed a declaration executed by: Heinz Mueller, Nadja Herzog; and Stephan Von Tapazicza.

On 10 March 2006, the United Stated Designated/Elected Office mailed a Notification of Defective Response (Form PCT/DO/EO/916) indicating that the declaration filed 28 November 2005 was defective because it indicated additional inventors not listed on the published international application.

On 31 March 2006, applicants filed the present "Request for Correction of Inventorship."

## DISCUSSION

The present submission seeks to correct the inventorship so as to add inventor Nadja Herzog and Stephan Von Tapazicza to the application. Where, as here, the inventorship in the national stage declaration is not consistent with the inventorship in the international application, applicants must correct the inventorship pursuant to 37 CFR 1.497(d), which states the following:

> (d) If the oath or declaration filed pursuant to 35 U.S.C. 371(c)(4) and this section names an inventive entity different from the inventive entity set forth in the international application, the oath or declaration must be accompanied by:
>
> > (1) A statement from each person being added as an inventor and from each person being deleted as an inventor that any error in inventorship in the international application occurred without deceptive intention on his or her part;
> >
> > (2) The processing fee set forth in § 1.17; and
> >
> > (3) If an assignment has been executed by any of the original named inventors, the written consent of the assignees (see § 3.73(b) of this chapter).
> >
> > (4) any new oath or declaration required by paragraph (f) of this subsection.

With respect to the adding Nadja Herzog and Stephan Von Tapazicza to the application, applicants' 31 March 2006 submission satisfies requirements (1), (2), and (4).

However, item (3) has not been satisfied. Applicants have provided an "Consent of Assignee under 37 CFR 1.497(d)(3)" which states that assignee (Cognis Deutschland GmbH & Co. KG) consents to the correction of inventorship, however, the assignee has not established its ownership to the application in accordance with 37 CFR 3.73. (See Manuel of Patent Examining Procedure (MPEP) §324 and Statement under 37 CFR 3.73(b). Therefore, applicants must provide a copy of the assignment or indicate that the assignment has been recorded in the United States Patent and Trademark Office (e.g., reel and frame number).

For the reasons discussed above, it is inappropriate, at this time, to grant applicants request for correction of inventorship.

## CONCLUSION

For the reasons discussed above, applicants' request under 37 CFR 1.497(d) is **DISMISSED** without prejudice.

A proper response must be filed within **TWO (2) MONTHS** from the mail date of this decision. Extensions of time may be obtained under 37 CFR 1.136(a). A proper response must include a written consent of assignee in compliance with 37 CFR 3.73(b).

Any further correspondence with respect to this matter should be addressed to: Mail Stop PCT, Commissioner for Patents, Office of PCT Legal Administration, P.O. Box 1450, Alexandria, Virginia 22313-1450, with the contents of the letter marked to the attention of the Office of PCT Legal Administration.

Anthony Smith
Attorney-Advisor
Office of PCT Legal Administration
Tel: (571) 272-3298
Fax: (571) 273-0459

12/22/2006 SBASHEIR 00000002 501177 10527212
Sale Ref: 00000002 DA#: 501177 10527212
01 FC:1464 130.00 DA

UNITED STATES PATENT AND TRADEMARK OFFICE

Commissioner for Patents
United States Patent and Trademark Office
P.O. Box 1450
Alexandria, VA 22313-1450
www.uspto.gov

COGNIS CORPORATION
PATENT DEPARTMENT
300 BROOKSIDE AVENUE
AMBLER, PA 19002

**COPY MAILED**

FEB 01 2007

**OFFICE OF PETITIONS**

| | | |
|---|---|---|
| In re Application of | : | |
| Heinz Mueller | : | |
| Application No. 10/527,212 | : | DECISION ON PETITION |
| Filed: | : | TO MAKE SPECIAL |
| Attorney Docket No. C 2341 PCT/US | : | 37 CFR 1.102(c)(2) |
| | : | |

This is a decision on the petition under 37 CFR 1.102(c)(2)(i), filed June 7, 2006, to make the above-identified application special based on the invention materially enhancing the quality of the environment as set forth in M.P.E.P. § 708.02, Section V. This is also a decision on the petition under 37 CFR 1.102(c)(2)(ii), filed June 7, 2006, to make the above-identified application special based on the invention materially contributing to the development or conservation of energy resources as set forth in M.P.E.P. § 708.02, Section VI.

The petition under 37 CFR 1.102(c)(2)(i) is **DISMISSED**.

A grantable petition to make an application special under 37 CFR 1.102(c)(2)(i) and MPEP § 708.02, Section V: Environmental Quality, must state that special status is sought because the invention materially enhances the quality of the environment by contributing to the restoration or maintenance of basic life-sustaining natural elements. If the disclosure is not clear on its face that the claimed invention materially enhances the quality of the environment by contributing to the restoration or maintenance of one of the basic life-sustaining natural elements, the petition must be accompanied by a statement by the applicant, assignee, or an attorney/agent registered to practice before the Office explaining how the materiality standard is met. No fee is required

The present invention relates to borehole treatment compositions. However, there is no factual evidence that the invention "materially enhances the quality of the environment of mankind by contributing to the restoration or maintenance of the basis-life sustaining natural elements." The statement submitted does not explain how the composition claimed restores or maintains basic life-sustaining natural elements. The contribution of petitioner's invention, while beneficial to the environment, does not rise to the level of materiality intended by the Rule.

The petition under 37 CFR 1.102(c)(2)(ii), is **DISMISSED**.

A grantable petition to make an application special under 37 CFR 1.102(c)(2)(ii) and MPEP § 708.02, Section VI: Energy, must state how the invention materially contributes to (A) the discovery or development of energy resources, or (B) the more efficient utilization and conservation of energy resources. If the disclosure is not clear on its face that the claimed invention materially contributes category (A) or (B), the petition must be accompanied by a statement by the applicant, assignee, or an attorney/agent registered to practice before the Office explaining how the materiality standard is met. Examples of inventions in category (A) would be developments in fossil fuels (natural gas, coal, and petroleum), hydrogen fuel technologies, nuclear energy, solar energy, etc. Category (B) would include inventions relating to the reduction of energy consumption in combustion systems, industrial equipment, household appliances, etc. No fee is required.

The instant petition fails to meet the materiality standard of 37 CFR 102(c)(2)(ii). Although borehole treatment compositions encompass all kinds of auxiliary fluids, which can be used when drilling into reserves of petroleum or natural gas, the petitioner has failed to state how the claimed invention contributes in a significant, substantial, or noticeable manner to inventions relating to the reduction of energy consumption. Accordingly, it is unclear as to how the claimed invention would contribute in a significant manner to the reduction of energy consumption.

Telephone inquires concerning this decision should be directed to Irvin Dingle at 571-272-3210.

All other inquires concerning either the examination or status of the application should be directed to the Technology Center.

The application is being forwarded to the Initial Patent Examination Unit.

Denise Pothier
Petitions Examiner
Office of Petitions

2 8 FEB 2007

UNITED STATES PATENT AND TRADEMARK OFFICE

Commissioner for Patents
United States Patent and Trademark Office
P.O. Box 1450
Alexandria, VA 22313-1450
www.uspto.gov

Cognis Corporation
Patent Department
300 Brookside Avenue
Ambler, PA 19002

In re Application of
MUELLER et al.
U.S. Application No. 10/527,212
PCT No.: PCT/EP03/09981
Int. Filing Date: 09 September 2003
Priority Date: 18 September 2002
Attorney Docket No.: C 2341 PCT/US
For: BOREHOLE TREATMENT AGENT CONTAINING LOW-TOXIC OIL PHASE

DECISION ON REQUEST

This decision is issued in response to applicants' "Response to Decision on Request for Correction of Inventorship" filed 27 February 2007, which is being treated as a Renewed Request under 37 CFR 1.497(d).

## BACKGROUND

On 09 September 2003, applicants filed international application no. PCT/EP03/09981 which claimed a priority date of 18 September 2002. The international application named Heinz Mueller as applicant/inventor. Pursuant to 37 CFR 1.495, the deadline for payment of the basic national fee in the United States was to expire 30 months from the priority date, 18 March 2005.

On 10 March 2005, applicants filed a transmittal letter for entry into the national stage accompanied by, *inter alia:* the requisite basic national fee; a copy of the international application; and a preliminary amendment.

On 28 September 2005, the United Stated Designated/Elected Office mailed a Notification of Missing Requirements (Form PCT/DO/EO/905) indicating that an oath or declaration in compliance with 37 CFR 1.497(a) and (b) must be filed. The notification set a two-month time limit in which to respond.

On 28 November 2005, applicants filed a declaration executed by: Heinz Mueller, Nadja Herzog; and Stephan Von Tapazicza.

On 10 March 2006, the United Stated Designated/Elected Office mailed a Notification of Defective Response (Form PCT/DO/EO/916) indicating that the declaration filed 28 November 2005 was defective because it indicated additional inventors not listed on

the published international application.

On 31 March 2006, applicants filed a "Request for Correction of Inventorship." In a decision dated 22 December 2006, applicants' request under 37 CFR 1.497(d) was dismissed without prejudice.

On 27 February 2007, applicants filed the present "Response to Decision on Request for Correction of Inventorship."

## DISCUSSION

The present submission seeks to correct the inventorship so as to add inventor Nadja Herzog and Stephan Von Tapazicza to the application. Where, as here, the inventorship in the national stage declaration is not consistent with the inventorship in the international application, applicants must correct the inventorship pursuant to 37 CFR 1.497(d), which states the following:

> (d) If the oath or declaration filed pursuant to 35 U.S.C. 371(c)(4) and this section names an inventive entity different from the inventive entity set forth in the international application, the oath or declaration must be accompanied by:
>
> > (1) A statement from each person being added as an inventor and from each person being deleted as an inventor that any error in inventorship in the international application occurred without deceptive intention on his or her part;
> >
> > (2) The processing fee set forth in § 1.17; and
> >
> > (3) If an assignment has been executed by any of the original named inventors, the written consent of the assignees (see § 3.73(b) of this chapter).
> >
> > (4) any new oath or declaration required by paragraph (f) of this subsection.

Applicants have satisfied items (1); (2); (3) and (4).

## CONCLUSION

The request under 37 CFR 1.497(d) is **GRANTED**.

A review of the application papers reveals that applicants have completed all the requirements of 35 U.S.C. 371 for entry into the national stage. This application will be

given an international application filing date of 09 September 2003 and a date of 28 November 2005 under 35 U.S.C. 371.

The application is being returned to the United States Designated/Elected Office for further processing in accordance with this decision.

Anthony Smith

Anthony Smith
Attorney-Advisor
Office of PCT Legal Administration
Tel: (571) 272-3298
Fax: (571) 273-0459

UNITED STATES PATENT AND TRADEMARK OFFICE

UNITED STATES DEPARTMENT OF COMMERCE
United States Patent and Trademark Office
Address: COMMISSIONER FOR PATENTS
P.O. Box 1450
Alexandria, Virginia 22313-1450
www.uspto.gov

SMITH MOORE LEATHERWOOD LLP
P.O. BOX 21927
GREENSBORO, NC 27420

Mail Date: 04/20/2010

| | | |
|---|---|---|
| **Applicant** | : Heinz Mueller | : DECISION ON REQUEST FOR |
| **Patent Number** | : 7666820 | : RECALCULATION of PATENT |
| **Issue Date** | : 02/23/2010 | : TERM ADJUSTMENT IN VIEW |
| **Appliction No** | : 10/527,212 | : OF WYETH AND NOTICE OF INTENT TO |
| **Filed** | : 11/28/2005 | : ISSUE CERTIFICATE OF CORRECTION |
| | | : |

The Request for Recalculation is **GRANTED** to the extent indicated.

The patent term adjustment has been determined to be **847** days. The USPTO will *sua sponte* issue a certificate of correction reflecting the amount of PTA days determined by the recalculation.

Prior to the issuance of the certificate of correction, the USPTO will afford patentee an opportunity to be heard and request reconsideration. Accordingly, patentee has **one month or thirty (30) days**, whichever is longer, to file a request for reconsideration of this patent term adjustment calculation. See 35 U.S.C. 154(b)(3)(B)(ii) and 37 CFR 1.322(a)(4). No extensions of time will be granted under 37 CFR 1.136.

Patentee should use document code PET.OP if electronically filing a request for reconsideration of this patent term adjustment calculation. The patentee must also include the information required by 37 CFR 1.705(b)(2) and the fee required by 37 CFR 1.18(e). If patentee does not file a timely request for reconsideration of this patent term adjustment calculation including the information required by 37 CFR 1.705(b)(2) and the fee required by 37 CFR 1.18(e), the USPTO will issue a certificate of correction reflecting the PTA determination noted above.

Patentee should be aware that in order to preserve the right to review in the United States District Court for the District of Columbia of the USPTO patent term adjustment determination, patentee must ensure that he or she also take the steps required under 35 U.S.C. 154(b)(4)(A) in a timely manner. Nothing in the request for recalculation should be construed as providing an alternative time frame for commencing a civil action under 35 U.S.C. 154(b)(4)(A).

Any questions concerning this decision should be directed to the Office of Patent Legal Administration at 571-272-7702.

UNITED STATES PATENT AND TRADEMARK OFFICE

Commissioner for Patents
United States Patent and Trademark Office
P.O. Box 1450
Alexandria, VA 22313-1450
www.uspto.gov

UNION CARBIDE CHEMICALS
AND PLASTICS TECHNOLOGY
CORPORATION
P.O. BOX 1967
MIDLAND, MI 48641-1967

COPY MAILED

SEP 2 8 2007

OFFICE OF PETITIONS

In re Application of

Wasserman, et al.

Application No. 10/527,221

Filed: March 10, 2005

Attorney Docket No. 60487F

DECISION ON PETITION

This is a decision on the petition under 37 CFR 1.137(b), filed September 14, 2007, to revive the above-identified application.

The petition is **GRANTED**.

The above-cited application became abandoned for failure to reply in a timely manner to the non-final Office action mailed March 12, 2007, which set a shortened statutory period for reply of three (3) months. No extensions of time were obtained within the allowable period. Accordingly, the application became abandoned on June 13, 2007.

The amendment filed September 14, 2007, is noted and made of record.

The address as cited on the petition differs from the address of record. Although a courtesy copy of this decision is being mailed to the address as cited on the petition, all future correspondence will be mailed solely to the address of record until appropriate written instructions to the contrary are received.

The request for an extension of time within the third month is noted, but cannot be granted as the request was made outside the maximum statutory period for reply. Deposit account 21-0100 will refunded $1020.00 in due course.

The application is being forwarded to Technology Center 2800, GAU 2831 for further processing.

Telephone inquiries concerning this decision should be directed to the undersigned at (571) 272-3222.

Kenya A. McLaughlin
Petitions Attorney
Office of Petitions

Cc:
Kevin R. Hansbro
The Dow Chemical Co.
2030 Dow Center
Midland, Michigan 48674

UNITED STATES PATENT AND TRADEMARK OFFICE

Commissioner for Patents
United States Patent and Trademark Office
P.O. Box 1450
Alexandria, VA 22313-1450
www.uspto.gov

**UNION CARBIDE CHEMICALS AND PLASTICS TECHNOLOGY CORPORATION**
**P.O. BOX 1967**
**MIDLAND MI 48641-1967**

COPY MAILED

APR 29 2008

OFFICE OF PETITIONS

| | | |
|---|---|---|
| In re Application of | : | |
| Scott H. Wasserman et al. | : | |
| Application No. 10/527,221 | : | DECISION ON PETITION |
| Filed: March 10, 2005 | : | |
| Attorney Docket No. **60487F** | : | |

This is a decision on the petition under the unintentional provisions of 37 CFR 1.137(b), filed February 21, 2008, to revive the above-identified application.

The petition is **GRANTED**.

This application became abandoned for failure to timely pay the issue and publication fees on or before January 18, 2008, as required by the Notice of Allowance and Fee(s) Due, mailed October 18, 2007. Accordingly, the date of abandonment of this application is January 19, 2008.

The petition satisfies the requirements of 37 CFR 1.137(b) in that petitioner has supplied (1) the reply in the form of payment of the issue fee of $1440 and the publication fee of $300, (2) the petition fee of $1540; and (3) a proper statement of unintentional delay. Accordingly, the Issue Fee and Publication Fee is accepted as having been unintentionally delayed.

The address as cited on the petition differs from the address of record. Although a courtesy copy of this decision is being mailed to the address as cited on the petition, all future correspondence will be mailed solely to the address of record until appropriate written instructions to the contrary are received.

Telephone inquiries concerning this decision should be directed to Tredelle Jackson at (571) 272-2783.

This application is being referred to Publishing Division for processing into a patent.

David Bucci
Petitions Examiner
Office of Petitions

cc: **THE DOW CHEMICAL CO.**
**2030 DOW CENTER**
**MIDLAND, MI 48674**

UNITED STATES PATENT AND TRADEMARK OFFICE

Commissioner for Patents
United States Patent and Trademark Office
P.O. Box 1450
Alexandria, VA 22313-1450
www.uspto.gov

HARNESS, DICKEY & PIERCE, P.L.C.
P.O. BOX 8910
RESTON VA 20195

**COPY MAILED**

FEB 21 2008

Applicant: Kijima
Appl. No.: 10/527,233
International Filing Date: March 5, 2003
Title: PHENOLIC POLYMER NANOTUBE AND PRODUCTION METHOD THEREOF
Attorney Docket No.: 12480-000107/US
Pub. No.: US 2006/0160981 A1
Pub. Date: July 20, 2006

This is a decision on the request for a "Corrected Notice of Publication", received on January 12, 2007, for the above-identified application

The request is DISMISSED.

Applicant requests that the Notice of Publication of Application be corrected because the title is incorrect as it may have been pulled from the original PCT application but it is not the title used in the declaration and specification.

37 CFR 1.221 (b) is applicable "only when the Office makes a material mistake which is apparent from Office records.... Any request for a corrected publication or revised patent application publication other than provided as provided in paragraph (a) of this section must be filed within two months from the date of the patent application publication. This period is not extendable." A material mistake must affect the public's ability to appreciate the technical disclosure of the patent application publication, to determine the scope of the patent application publication, or to determine the scope of the provisional rights that an applicant may seek to enforce upon issuance of a patent. [1]

If applicant is attempting to make a request for corrected publication, the request received on January 12, 2007, was not timely filed under 37 CFR 1.221(b).

The Notice of Publication cannot be reprinted with a new title as requested, as there is not a process to generate a new notice. Since the title of the application was not amended, it was correctly published with the title from the PCT application. See MPEP 1893.03(e)(1).

[1] Changes to Implement Eighteen-Month Publication of Patent Applications, 65 FR 57023, 57038 (Sept. 20, 2000), 1239, Off. Gaz. Pat. Office Notices 63, 75 (Oct. 10, 2000) (final rule).

The applicant is advised that a "request for republication of an application previously published" may be filed under 37 CFR 1.221(a). Such a request for republication "must include a copy of the application compliance with the Office's electronic filing system requirements and be accompanied by the publication fee set forth in § 1.18 (d) and the processing fee set forth in § 1.17(i)." If the request for republication does not comply with the electronic filing system requirements, the republication will not take place and the publication fee set forth in § 1.18(d) will be refunded. The processing fee will be retained.

Any request for republication under 37 CFR 1.221(a), must be submitted via the EFS system as a "Pre-Grant Publication" and questions or request for reconsideration of the decision, should be addressed as follows:

By mail to: Mail Stop PGPUB
Commissioner for Patents
P.O. Box 1450
Alexandria, Va. 22313-1450

By facsimile: 571-273-8300

Inquiries relating to this matter may be directed to Mark Polutta at (571) 272-7709.

Mark Polutta
Legal Advisor
Office of Patent Legal Administration
Office of the Deputy Commissioner
for Patent Examination Policy

16 AUG 2005

#5

UNITED STATES PATENT AND TRADEMARK OFFICE

Commissioner for Patents
United States Patent and Trademark Office
P.O. Box 1450
Alexandria, VA 22313-1450
www.uspto.gov

VENABLE LLP
P.O. Box 34385
Washington, DC 20043-9998

| | | |
|---|---|---|
| In re Application of | : | |
| SHAHBAZI, Majid | : | |
| Application No.: 10/527,235 | : | |
| PCT No.: PCT/US03/26645 | : | |
| Int. Filing Date: 27 August 2003 | : | **DECISION** |
| Priority Date: 27 August 2002 | : | |
| Attorney Docket No.: 40732-215150 | : | |
| For: ENTERPRISE-WIDE SECURITY | : | |
| SYSTEM FOR COMPUTER DEVICES | : | |

Applicant's "Petition for Revival of an International Application for Patent Designating the U.S. Abandoned Unintentionally Under 37 CFR 1.137(b)" filed with the national stage papers on 09 March 2005 is hereby **GRANTED** as follows:

The basic national fee and petition fee for a small entity have been paid. Applicant states that "[t]he entire delay in filing the required reply from the due date for the reply until the filing of a grantable petition under 37 CFR 1.137(b) was unintentional" as required by 37 CFR 1.137(b)(3). A terminal disclaimer is not required. Accordingly, all requirements under 37 CFR 1.137(b) have been satisfied.

A signed oath or declaration has not been provided.

This application is being forwarded to the United States Designated/Elected Office for further processing including mailing a Notification of Missing Requirements Under 35 U.S.C. 371 in the United States Designated/Elected Office (DO/EO/US) (Form PCT/DO/EO/905) indicating that a declaration in compliance with 37 CFR 1.497(a) and (b) and a surcharge fee are required.

James Thomson

James Thomson
Attorney Advisor
PCT Legal Administration

Tel.: (571) 272-3302

UNITED STATES PATENT AND TRADEMARK OFFICE

UNITED STATES DEPARTMENT OF COMMERCE
United States Patent and Trademark Office
Address: COMMISSIONER FOR PATENTS
P.O. Box 1450
Alexandria, Virginia 22313-1450
www.uspto.gov

Patent Capital Group
6119 McCommas Blvd
Dallas, TX 75214

Mail Date: 08/03/2010

| | | |
|---|---|---|
| **Applicant** | : Majid Shahbazi | : DECISION ON REQUEST FOR |
| **Patent Number** | : 7669237 | : RECALCULATION of PATENT |
| **Issue Date** | : 02/23/2010 | : TERM ADJUSTMENT IN VIEW |
| **Application No** | : 10/527,235 | : OF WYETH AND NOTICE OF INTENT TO |
| **Filed** | : 11/30/2005 | : ISSUE CERTIFICATE OF CORRECTION |
| | | : |

The Request for Recalculation is **GRANTED** to the extent indicated.

The patent term adjustment has been determined to be **0** days. The USPTO will *sua sponte* issue a certificate of correction reflecting the amount of PTA days determined by the recalculation.

Prior to the issuance of the certificate of correction, the USPTO will afford patentee an opportunity to be heard and request reconsideration. Accordingly, patentee has **one month or thirty (30) days**, whichever is longer, to file a request for reconsideration of this patent term adjustment calculation. See 35 U.S.C. 154(b)(3)(B)(ii) and 37 CFR 1.322(a)(4). No extensions of time will be granted under 37 CFR 1.136.

Patentee should use document code PET.OP if electronically filing a request for reconsideration of this patent term adjustment calculation. The patentee must also include the information required by 37 CFR 1.705(b)(2) and the fee required by 37 CFR 1.18(e). If patentee does not file a timely request for reconsideration of this patent term adjustment calculation including the information required by 37 CFR 1.705(b)(2) and the fee required by 37 CFR 1.18(e), the USPTO will issue a certificate of correction reflecting the PTA determination noted above.

Patentee should be aware that in order to preserve the right to review in the United States District Court for the District of Columbia of the USPTO patent term adjustment determination, patentee must ensure that he or she also take the steps required under 35 U.S.C. 154(b)(4)(A) in a timely manner. Nothing in the request for recalculation should be construed as providing an alternative time frame for commencing a civil action under 35 U.S.C. 154(b)(4)(A).

Any questions concerning this decision should be directed to the Office of Patent Legal Administration at 571-272-7702.

25 MAY 2006

#6

United States Patent and Trademark Office

Commissioner for Patents
United States Patent and Trademark Office
P.O. Box 1450
Alexandria, VA 22313-1450
www.uspto.gov

Wyeth
Patent Law Department
Five Giralda Farms
Madison, NJ 07940

| | | |
|---|---|---|
| In re Application of | : | |
| Vertommen et al. | : | |
| Application No.: 10/527,246 | : | DECISION |
| PCT No.: PCT/US03/28519 | : | |
| Int. Filing Date: 11 September 2003 | : | ON |
| Priority Date: 16 September 2002 | : | |
| Attorney Docket No.: AHP98246 | : | PETITION |
| For: Vaccines Containing Viruses Involved In | : | |
| Avian Malabsorption Syndrome And | : | |
| Methods Of Administration Thereof | : | |

This is in response to the petition under 37 CFR 1.47(a) filed on 09 February 2006.

## BACKGROUND

This international application was filed on 11 September 2003, claimed an earlier priority date of 16 September 2002, and designated the U.S. The 30 month time period for paying the basic national fee in the United States expired at midnight on 16 March 2005. Applicants filed *inter alia* the basic national fee on 09 March 2005.

On 09 August 2005, a Notification of Missing Requirements (Form PCT/DO/EO/905) was mailed to applicants, requiring the submission of an executed oath or declaration in compliance with 37 CFR 1.497(a) and (b) and the surcharge under 37 CFR 1.492(h).

## DISCUSSION

A petition under 37 CFR 1.47(a) must be accompanied by (1) the fee under 37 CFR 1.17(h), (2) factual proof that the missing joint inventor refuses to execute the application or cannot be reached after diligent effort, (3) a statement of the last known address of the missing inventor, and (4) an oath or declaration by each 37 CFR 1.47(a) applicant on his or her own behalf and on behalf of the non-signing joint inventor.

Regarding requirement (1), the $200.00 petition fee is being charged to counsel's Deposit Account No. 01-1425, per the general fee authorization filed on 09 February 2006.

Regarding requirement (2), petitioner urges that the absence on the declaration of the signatures of joint inventors Mathieu Hubert Vertommen and Jacob Jacobus Louwerens be excused because "two separate attempts were made to secure the signatures of Messrs. Vertommen and Louwerens on the Declaration/Power of Attorney for this application," but "to date, no executed papers have been returned by the said inventors..." Counsel's attention is respectfully drawn to MPEP 409.03(d), which states in part:

A refusal by an inventor to sign an oath or declaration when the inventor has not been presented with the application papers does not itself suggest that the inventor is refusing to join the application unless it is clear that the inventor understands exactly what he or she is being asked to sign and refuses to accept the application papers. A copy of the application papers should be sent to the last known address of the nonsigning inventor, or, if the nonsigning inventor is represented by counsel, to the address of the nonsigning inventor's attorney. The fact that an application may contain proprietary information does not relieve the 37 CFR 1.47 applicant of the responsibility to present the application papers to the inventor if the inventor is willing to receive the papers in order to sign the oath or declaration. It is noted that the inventor may obtain a complete copy of the application, unless the inventor has assigned his or her interest in the application, and the assignee has requested that the inventor not be permitted access. See MPEP § 106. It is reasonable to require that the inventor be presented with the application papers before a petition under 37 CFR 1.47 is granted since such a procedure ensures that the inventor is apprised of the application to which the oath or declaration is directed. In re Gray, 115 USPQ 80 (Comm'r Pat. 1956).

Where a refusal of the inventor to sign the application papers is alleged, the circumstances of the presentation of the application papers and of the refusal must be specified in a statement of facts by the person who presented the inventor with the application papers and/or to whom the refusal was made. Statements by a party not present when an oral refusal is made will not be accepted. Proof that a bona fide attempt was made to present a copy of the application papers (specification, including claims, drawings, and oath or declaration) to the nonsigning inventor for signature, but the inventor refused to accept delivery of the papers or expressly stated that the application papers should not be sent, may be sufficient. When there is an express oral refusal, that fact along with the time and place of the refusal must be stated in the statement of facts. When there is an express written refusal, a copy of the document evidencing that refusal must be made part of the statement of facts. The document may be redacted to remove material not related to the inventor's reasons for refusal. When it is concluded by the 37 CFR 1.47 applicant that a nonsigning inventor's conduct constitutes a refusal, all facts upon which that conclusion is based should be stated in the statement of facts in support of the petition or directly in the petition. If there is documentary evidence to support facts alleged in the petition or in any statement of facts, such evidence should be submitted. Whenever a nonsigning inventor gives a reason for refusing to sign the application oath or declaration, that reason should be stated in the petition

Petitioner states that, on 09 November 2005, parcels each containing a copy of a cover letter, a copy of the application as filed, a Declaration/Power of Attorney, and an Assignment were delivered to each of the non-signing inventors. This assertion is corroborated by copies of DHL tracking receipts showing delivery of both parcels on 09 November 2005 (one tracking receipt shows "Signed for by: Lourens," while the other shows "Signed for by: VERTOMM"). The accompanying copies of the cover letters indicate the last-known address for each of the respective non-signing inventors, and petitioner has included copies of the application and declaration and assignment documents sent to them. Petitioner has further provided copies of follow-up letters sent to the non-signing inventors at their last-known addresses, again requesting execution and return of the declaration, as well as copies of DHL tracking reports showing delivery on 16 January 2006. Based on the totality of the evidence presently of record, it would be appropriate to conclude that copies of the application and the declaration document were presented to each of Mr. Vertommen and Mr. Louwerens, and that the failure of each of these

non-signing inventors to execute and return the declaration constitutes a "refusal" within the meaning of 37 CFR 1.47(a).

Regarding requirement (3), the petition includes a statement the last known addresses of Mr. Vertommen and Mr. Louwerens. Accordingly, requirement (3) has been satisfied.

Regarding requirement (4), the petition is accompanied by a declaration document, filed on 09 March 2005, signed by joint inventor Frans Gerrit Davelaar. However, inspection of the declaration reveals that it nominates "Jacob Jacobuw LOUWERENS," while the published international application nominates "LOUWERENS, Jacob, Jacobus." No explanation of this discrepancy appears to be present in the application file. As such, it would not be appropriate to accept said declaration at this time. Accordingly, requirement (4) has not been satisfied.

## DECISION

The petition under 37 CFR 1.47(a) is **DISMISSED**, without prejudice.

If reconsideration on the merits of this petition is desired, a proper response must be filed within **TWO (2) MONTHS** from the mail date of this decision. Any reconsideration request should include a cover letter entitled "Renewed Petition Under 37 CFR 1.47." No additional petition fee is required. Extensions of time may be obtained under 37 CFR 1.136(a). Failure to timely file a proper response will result in **ABANDONMENT**.

The $200.00 petition fee is being charged to counsel's Deposit Account No. 01-1425, as authorized by the correspondence filed on 09 February 2006.

Please direct any further correspondence with respect to this matter to the Assistant Commissioner for Patents, Mail Stop PCT, P.O. Box 1450, Alexandria, VA 22313-1450, and address the contents of the letter to the attention of the PCT Legal Office.

Richard Cole
PCT Legal Examiner
Office of PCT Legal Administration

George M. Dombroske
PCT Legal Examiner
Office of PCT Legal Administration
Tel: (571) 272-3283
Fax: (571) 273-0459

Best Available Copy

United States Patent and Trademark Office

09 JUN 2008

Commissioner for Patents
United States Patent and Trademark Office
P.O. Box 1450
Alexandria, VA 22313-1450
www.uspto.gov

Wyeth
Patent Law Department
Five Giralda Farms
Madison, NJ 07940

| | |
|---|---|
| In re Application of<br>Vertommen et al.<br>Application No.: 10/527,246<br>PCT No.: PCT/US03/28519<br>Int. Filing Date: 11 September 2003<br>Priority Date: 16 September 2002<br>Attorney Docket No.: AHP98246<br>For: Vaccines Containing Viruses Involved In Avian Malabsorption Syndrome And Methods Of Administration Thereof | DECISION<br>ON<br>PETITION |

This is in response to the renewed petition under 37 CFR 1.47(a) filed on 19 July 2006.

## DISCUSSION

In a Decision mailed on 25 May 2006, the petition under 37 CFR 1.47(a) filed on 09 February 2006 was dismissed, without prejudice, because

> Regarding requirement (4), the petition is accompanied by a declaration document, filed on 09 March 2005, signed by joint inventor Frans Gerrit Davelaar. However, inspection of the declaration reveals that it nominates "Jacob Jacobuw LOUWERENS," while the published international application nominates "LOUWERENS, Jacob, Jacobus." No explanation of this discrepancy appears to be present in the application file. As such, it would not be appropriate to accept said declaration at this time. Accordingly, requirement (4) has not been satisfied.

In response, petitioner has filed a declaration document executed by Frans Gerrit DAVELAAR and Jabob Jacobus LOUWERENS. This declaration is acceptable for purposes of compliance with 37 CFR 1.497(a) and (b). Therefore, requirement (4) now has been satisfied, and the petition is now grantable with respect to the remaining non-signing inventor, Mathieu Hubert VERTOMMEN.

## DECISION

The petition under 37 CFR 1.47(a) is **GRANTED**.

As provided in 37 CFR 1.47(a), a notice of the filing of this application will be forwarded to the non-signing inventor at his last known address of record.

A notice of the filing of the application under 37 CFR 1.47(a) will be published in the Official Gazette.

The application is being returned to the National Stage Processing Branch for processing as the U.S. National Stage of the above-identified international application. Its date under 35 U.S.C. 371(c)(1), (2) and (4) is **19 July 2006** (the date a declaration acceptable for purposes of 37 CFR 1.497(a) and (b) was filed).

/George Dombroske/
George Dombroske
PCT Legal Examiner
Office of PCT Legal Administration
Tel: (571) 272-3283
Fax: (571) 273-0459

**Best Available Copy**

United States Patent and Trademark Office

Commissioner for Patents
United States Patent and Trademark Office
P.O. Box 1450
Alexandria, VA 22313-1450
www.uspto.gov

Mathieu Hubert Vertommen
Zeelandia, 4
3901 GZ Veenendaal
THE NETHERLANDS

In re Application of
Vertommen et al.
Application No.: 10/527,246
PCT No.: PCT/US03/28519
Int. Filing Date: 11 September 2003
Priority Date: 16 September 2002
Attorney Docket No.: AHP98246
For: Vaccines Containing Viruses Involved In Avian Malabsorption Syndrome And Methods Of Administration Thereof

Dear Mr. Vertommen:

You are named as a joint inventor in the above identified United States patent application, filed under the provisions of 35 U.S.C. 116 (United States Code), and 37 CFR 1.47(a), Rules of Practice in Patent Cases. Should a patent be granted on the application you will be designated therein as a joint inventor.

As a named inventor you are entitled to inspect any paper in the file wrapper of the application, order copies of all or any part thereof (at a prepaid cost per 37 CFR 1.19) or make your position of record in the application. Alternatively, you may arrange to do any of the preceding through a registered patent attorney or agent presenting written authorization from you. If you care to join the application, counsel of record (see below) would presumably assist you. Joining in the application would entail the filing of an appropriate oath or declaration by you pursuant to 37 CFR 1.63.

Telephone inquiries regarding this communication should be directed to the undersigned at (571) 272-3283. Requests for information regarding your application should be directed to the File Information Unit at (703) 308-2733. Requests for information regarding how to pay for and order a copy of the application, or a specific paper in the application, should be directed to Certification Division at (703) 308-9726 or 1(800) 972-6382 (outside the Washington D.C. area).

Any further correspondence with respect to this matter should be addressed to the Assistant Commissioner for Patents, Mail Stop PCT, P.O. Box 1450, Alexandria, VA 22313-1450, with the contents of the letter marked to the attention of the Office of PCT Legal Administration.

/George Dombroske/
George Dombroske
PCT Legal Examiner
Office of PCT Legal Administration
Tel: (571) 272-3283
Fax: (571) 273-0459

Wyeth
Patent Law Department
Five Giralda Farms
Madison, NJ 07940

1 5 APR 2008

UNITED STATES PATENT AND TRADEMARK OFFICE

Commissioner for Patents
United States Patent and Trademark Office
P.O. Box 1450
Alexandria, VA 22313-1450
www.uspto.gov

BRUCE E. LILLING
LILLING & LILLING PLLC
P.O. BOX 560
GOLDEN BRIDGE NY 10526

| | | |
|---|---|---|
| In re Application of | : | |
| OZ | : | |
| Application No.: 10/527,249 | : | DECISION |
| PCT No.: PCT/IL2003/000751 | : | |
| Int. Filing Date: 18 September 2003 | : | |
| Priority Date: 30 September 2002 | : | |
| Attorney's Docket No.: 415/15 | : | |
| For: PISTON-ACTUATED ENDOSCOPIC TOOL | : | |

This decision is in response to applicants' petition under 37 CFR 1.137(a) filed in the United States Patent and Trademark Office (USPTO) on 25 December 2007, which has properly been treated as a petition under 37 CFR 1.181. No petition fee is required.

## BACKGROUND

On 18 September 2003, applicants filed international application PCT/IL2003/000751, which designated the United States and claimed a priority date of 30 September 2002. A copy of the international application was communicated to the United States Patent and Trademark Office from the International Bureau on 08 April 2004. The thirty-month period for paying the basic national fee in the United States expired at midnight on 30 March 2005.

On 09 March 2005, applicants filed a submission for entry into the national stage in the United States which was accompanied by, *inter alia*, the U.S. Basic National Fee.

On 12 August 2005, the DO/EO/US mailed a NOTIFICATION OF MISSING REQUIREMENTS UNDER 35 U.S.C. 371 (Form PCT/DO/EO/905) indicating, *inter alia*, that additional claim fees of $980 were required.

On 18 December 2007, the DO/EO/US mailed a NOTIFICATION OF ABANDONMENT (Form PCT/DO/EO/909) indicating that the application was abandoned for failure to respond the NOTIFICATION OF MISSING REQUIREMENTS mailed 12 August 2005.

On 25 December 2007, applicants filed the instant petition.

## DISCUSSION

The NOTIFICATION OF MISSING REQUIREMENTS mailed 12 August 2005 was mailed in error. No additional claim fees were due. Thus, the NOTIFICATION OF MISSING REQUIREMENTS mailed 12 August 2005 is hereby VACATED. Accordingly, the NOTIFICATION OF ABANDONMENT mailed 18 December 2007 is also hereby VACATED.

## CONCLUSION

For the reasons set forth above, the petition to withdraw the holding of abandonment is **GRANTED**.

For the reasons set forth above, the NOTIFICATION OF MISSING REQUIREMENTS mailed 12 August 2005 is VACATED.

For the reasons set forth above, the NOTIFICATION OF ABANDONMENT mailed 18 December 2007 is VACATED.

This application is being forwarded to the National Stage Processing Branch of the Office of PCT Operations to continue national stage processing of the application in accordance with this decision.

/Daniel Stemmer/

Daniel Stemmer
PCT Legal Examiner
PCT Legal Affairs
Office of Patent Cooperation Treaty
Legal Administration
Telephone: (571) 272-3301
Facsimile: (571) 273-0459

#12

UNITED STATES PATENT AND TRADEMARK OFFICE

Commissioner for Patents
United States Patent and Trademark Office
P.O. Box 1450
Alexandria, VA 22313-1450
www.uspto.gov

22 AUG 2006

Sean D. Solberg
Dorsey & Whitney, LLP
Intellectual Property Department
50 South Sixth Street
Minneapolis, MN 55402-1498

| | | |
|---|---|---|
| In re Application of | : | |
| WU, et al. | : | |
| Application No.: 10/527,257 | : | |
| PCT No.: PCT/CN02/00631 | : | DECISION ON PETITION |
| Int. Filing Date: 09 September 2002 | : | |
| Priority Date: None | : | UNDER 37 CFR 1.137(b) |
| Atty. Docket No.: 186353/US | : | |
| For: TUMOR TAG AND THE USE THEREOF | : | |

The petition to revive under 37 CFR 1.137(b) filed 09 August 2006 in the above-captioned application is hereby **GRANTED** as follows:

Applicant's statement that "the entire delay in response to this action was unintentional as Applicant did timely file a response on March 13, 2006, however the response was still considered incorrect" is being interpreted to mean that the entire delay in providing a compliant Sequence Listing from the due date for providing a CRF version of the Sequence Listing until the filing of a grantable petition pursuant to this paragraph was unintentional. If this is an incorrect reading of applicant's statement applicant should contact the PCT Legal Office immediately. Applicant's statement and the prompt filing of the petition satisfies the requirement of 37 CFR 1.137(b)(3).

A review of the application file reveals that applicant has now provided a diskette containing a computer readable form of the Sequence Listing free of any defects. Therefore, the request to revive the application abandoned under 35 U.S.C. 371(d) is granted as to the National stage in the United States of America. Further, a review of the application file reveals that all of the requirements of 35 U.S.C. 371 for entry into the national stage in the United States have been previously satisfied.

The application has an international filing date of 09 September 2002 under 35 U.S.C. 363 and will be given a date of **09 March 2005** under 35 U.S.C. 371(c)(1), (c)(2) and (c)(4).

This application is being returned to the United States Designated/Elected Office (DO/EO/US) for treatment in accordance with this decision.

Derek A. Putonen
Attorney Advisor
Office of PCT Legal Administration
Tel: (571) 272-3294
Fax: (571) 273-0459

UNITED STATES PATENT AND TRADEMARK OFFICE

COMMISSIONER FOR PATENTS
UNITED STATES PATENT AND TRADEMARK OFFICE
P.O. BOX 1450
ALEXANDRIA, VA 22313-1450
www.uspto.gov

Paper No.

OHLANDT, GREELEY,
RUGGIERO & PERLE, LLP
ONE LANDMARK SQUARE, 10TH FLOOR
STAMFORD CT 06901

COPY MAILED

JAN 05 2009

OFFICE OF PETITIONS

In re Application of :
Vogelsang et al. : DECISION ON PETITION
Application No. 10/527,262 :
Filed: October 4, 2005 :
Attorney Docket No. WW030USU :

This is a decision on the PETITION FOR REVIVAL OF PATENT APPLICATION ABANDONED UNINTENTIONALLY UNDER 37 CFR 1.137(b) filed August 20, 2008. Given the arguments on petition, this petition is being treated as a no-fee petition under 37 CFR 1.181(a) to withdraw the holding of abandonment[1].

The above-identified application became abandoned for failure to file a reply to the non-final Office action mailed September 4, 2007. This Office action set a shortened statutory period for reply of three (3) months, with extensions of time obtainable under § 1.136(a). No reply considered filed and no extension of time obtained, the application became abandoned effective December 5, 2007. A courtesy Notice of Abandonment was mailed on May 5, 2008.

The petition reveals that on filing of a response to the non-final Office action the application number was misidentified. A review of the record of the misidentified application confirms that the response as petitioner maintains it was filed on December 4, 2007 was, in fact, filed with the wrong application

[1] Once consideration of the petition under 37 CFR 1.137(b) is undertaken, the fee is not refundable. Accordingly, petitioners may wish to consider filing a (no-fee) petition under 37 CFR 1.181 solely or in the alternative for relief rather than filing a petition under 37 CFR 1.137(b) and offering arguments for refund of that fee.

number. Further investigation reveals that the response with a date of receipt of December 7, 2007, and a certificate of mailing pursuant to 37 CFR § 1.8 dated December 4, 2007, was entered in the misidentified application. This has been corrected. The response filed December 7, 2007, has been "moved" from the electronic record of the incorrectly identified application to the record of the instant application. Moreover, given the certificate of mailing, the response is considered timely filed.

In view thereof, the notice of abandonment mailed May 5, 2008, and the holding of abandonment are hereby **WITHDRAWN**.

The petition under § 1.181 is **GRANTED**.

No fee is required on petition under § 1.181.

Since consideration of the petition under 37 CFR 1.137(b) is unnecessary, no fee for such consideration is required. The fee is being refunded to Deposit Account No. 01-0467, as authorized.

Technology Center AU 3683 has been advised of this decision. The application file is, thereby, forwarded to the Technology Center's technical staff to withdraw the holding of abandonment and for the examiner to consider the response timely filed on December 7, 2007 (certificate of mailing dated December 4, 2007).

Telephone inquiries specific to this matter should be directed to the undersigned at (571) 272-3219.

Nancy Johnson
Senior Petitions Attorney
Office of Petitions

UNITED STATES PATENT AND TRADEMARK OFFICE

UNITED STATES DEPARTMENT OF COMMERCE
United States Patent and Trademark Office
Address: COMMISSIONER FOR PATENTS
P.O. Box 1450
Alexandria, Virginia 22313-1450
www.uspto.gov

FULBRIGHT & JAWORSKI L.L.P.
600 CONGRESS AVE.
SUITE 2400
AUSTIN, TX 78701

Mail Date: 04/27/2010

| | | |
|---|---|---|
| **Applicant** | : Kersten M. Small | : DECISION ON REQUEST FOR |
| **Patent Number** | : 7642052 | : RECALCULATION of PATENT |
| **Issue Date** | : 01/05/2010 | : TERM ADJUSTMENT IN VIEW |
| **Application No** | : 10/527,263 | : OF WYETH AND NOTICE OF INTENT TO |
| **Filed** | : 01/11/2006 | : ISSUE CERTIFICATE OF CORRECTION |
| | | : |

The Request for Recalculation is **GRANTED** to the extent indicated.

The patent term adjustment has been determined to be **462** days. The USPTO will *sua sponte* issue a certificate of correction reflecting the amount of PTA days determined by the recalculation.

Prior to the issuance of the certificate of correction, the USPTO will afford patentee an opportunity to be heard and request reconsideration. Accordingly, patentee has **one month or thirty (30) days**, whichever is longer, to file a request for reconsideration of this patent term adjustment calculation. See 35 U.S.C. 154(b)(3)(B)(ii) and 37 CFR 1.322(a)(4). No extensions of time will be granted under 37 CFR 1.136.

Patentee should use document code PET.OP if electronically filing a request for reconsideration of this patent term adjustment calculation. The patentee must also include the information required by 37 CFR 1.705(b)(2) and the fee required by 37 CFR 1.18(e). If patentee does not file a timely request for reconsideration of this patent term adjustment calculation including the information required by 37 CFR 1.705(b)(2) and the fee required by 37 CFR 1.18(e), the USPTO will issue a certificate of correction reflecting the PTA determination noted above.

Patentee should be aware that in order to preserve the right to review in the United States District Court for the District of Columbia of the USPTO patent term adjustment determination, patentee must ensure that he or she also take the steps required under 35 U.S.C. 154(b)(4)(A) in a timely manner. Nothing in the request for recalculation should be construed as providing an alternative time frame for commencing a civil action under 35 U.S.C. 154(b)(4)(A).

Any questions concerning this decision should be directed to the Office of Patent Legal Administration at 571-272-7702.

UNITED STATES PATENT AND TRADEMARK OFFICE

UNITED STATES DEPARTMENT OF COMMERCE
United States Patent and Trademark Office
Address: COMMISSIONER FOR PATENTS
P.O. Box 1450
Alexandria, Virginia 22313-1450
www.uspto.gov

MERCHANT & GOULD PC
P.O. BOX 2903
MINNEAPOLIS, MN 55402-0903

Mail Date: 04/21/2010

| | | |
|---|---|---|
| **Applicant** | : Sam Robertson England | : DECISION ON REQUEST FOR |
| **Patent Number** | : 7640603 | : RECALCULATION of PATENT |
| **Issue Date** | : 01/05/2010 | : TERM ADJUSTMENT IN VIEW |
| **Appliction No** | : 10/527,264 | : OF WYETH AND NOTICE OF INTENT TO |
| **Filed** | : 09/08/2005 | : ISSUE CERTIFICATE OF CORRECTION |
| | | : |

The Request for Recalculation is **GRANTED** to the extent indicated.

The patent term adjustment has been determined to be **968** days. The USPTO will *sua sponte* issue a certificate of correction reflecting the amount of PTA days determined by the recalculation.

Prior to the issuance of the certificate of correction, the USPTO will afford patentee an opportunity to be heard and request reconsideration. Accordingly, patentee has **one month or thirty (30) days**, whichever is longer, to file a request for reconsideration of this patent term adjustment calculation. See 35 U.S.C. 154(b)(3)(B)(ii) and 37 CFR 1.322(a)(4). No extensions of time will be granted under 37 CFR 1.136.

Patentee should use document code PET.OP if electronically filing a request for reconsideration of this patent term adjustment calculation. The patentee must also include the information required by 37 CFR 1.705(b)(2) and the fee required by 37 CFR 1.18(e). If patentee does not file a timely request for reconsideration of this patent term adjustment calculation including the information required by 37 CFR 1.705(b)(2) and the fee required by 37 CFR 1.18(e), the USPTO will issue a certificate of correction reflecting the PTA determination noted above.

Patentee should be aware that in order to preserve the right to review in the United States District Court for the District of Columbia of the USPTO patent term adjustment determination, patentee must ensure that he or she also take the steps required under 35 U.S.C. 154(b)(4)(A) in a timely manner. Nothing in the request for recalculation should be construed as providing an alternative time frame for commencing a civil action under 35 U.S.C. 154(b)(4)(A).

Any questions concerning this decision should be directed to the Office of Patent Legal Administration at 571-272-7702.

20 APR 2006

UNITED STATES PATENT AND TRADEMARK OFFICE

Commissioner for Patents
United States Patent and Trademark Office
P.O. Box 1450
Alexandria, VA 22313-1450
www.uspto.gov

MCDONNELL BOEHNEN HULBERT & BERGHOFF LLP
300 S. Wacker Drive
32nd Floor
Chicago, Il 60606

| | | |
|---|---|---|
| In re Application of: | : | |
| BECK, James, P., et al. | : | |
| U.S. Application No.: 10/527,294 | : | DECISION ON PETITION |
| PCT No.: PCT/US2003/028388 | : | UNDER 37 CFR 1.47(a) |
| International Filing Date: 10 September 2003 | : | |
| Priority Date: 10 September 2002 | : | |
| Attorney's Docket No.: 02-730-B5 | : | |
| For: SUBSTITUTED AMINOETHERS FOR THE | : | |
| TREATMENT OF ALZHEIMER'S DISEASE | : | |

This decision is issued in response to applicants' 22 February 2006 petition under 37 CFR 1.47(a). Applicants have paid the required petition fee.

## BACKGROUND

On 10 September 2003, applicants filed international application PCT/US2003/028388. The application claimed a priority date of 10 September 2002 and designated the United States. The deadline for submission of the basic national fee was thirty months from the priority date, i.e., 10 March 2005.

On 09 March 2005, applicants filed a transmittal letter for entry into the national stage in the United States accompanied by, among other materials, payment of the basic national fee.

On 22 July 2005, the United States Designated/Elected Office (DO/EO/US) mailed a "Notification Of Missing Requirements" (Form PCT/DO/EO/905) indicating that an oath or declaration in compliance with 37 CFR 1.497 and the surcharge for filing the declaration later than thirty months after the priority date were required.

On 30 January 2006, the DO/EO/US mailed a "Notification Of Abandonment" (Form PCT/DO/EO/909) indicating that the application was abandoned for failure to file a timely response to the Notification Of Missing Requirements mailed 22 July 2005.

On 22 February 2006, applicants filed a response to the Notification Of Missing Requirements, with the required five-month extension fee. The response included payment of the required surcharge, a declaration executed by two of the three inventors, and the petition under 37 CFR 1.47(a) considered herein. The petition requests acceptance of the declaration without the signature of the remaining inventor, Matthew DROWNS, whom applicants assert cannot be located after diligent effort.

## DISCUSSION

### 1. Notification Of Abandonment:

Based on the five-month extension of time paid for by applicants, the 22 February 2006 submission is considered a timely response to the Notification Of Missing Requirements mailed 22 July 2005. The "Notification Of Abandonment" (Form PCT/DO/EO/909) mailed 30 January 2006, based as it was on applicants' purported failure to file a timely response to the Notification Of Missing Requirements, is therefore appropriately vacated.

### 2. Petition Under 37 CFR 1.47(a):

A grantable petition under 37 CFR 1.47(a) must be accompanied by: (1) the fee under 37 CFR 1.17; (2) a statement of the last known address of the non-signing inventor; (3) an oath or declaration by the other inventors on behalf of themselves and the non-signing inventor; and (4) factual proof that the inventor refuses to execute the application or cannot be reached after diligent effort.

The petition here was accompanied by payment of the petition fee, and it includes a statement of the nonsigning inventor's last known address. Items (1) and (2) are therefore satisfied.

Regarding item (3), section 409.03(a) of the Manual of Patent Examining Procedure ("MPEP") states that:

> An oath or declaration signed by all the available joint inventors with the signature block of the nonsigning inventor(s) left blank may be treated as having been signed by all the available joint inventors on behalf of the nonsigning inventor(s), unless otherwise indicated.

Here, applicants have filed a declaration executed by two of the three inventors and including an unsigned signature box identifying the nonsigning inventor (Matthew DROWNS). This declaration is treated as having been executed by the available inventors on their behalf and on behalf of the nonsigning inventor. Item (3) is therefore satisfied.

Regarding item (4), applicants assert that the nonsigning inventor cannot be located after diligent effort. The petition includes a declaration of Steven J. Sarussi, and exhibits thereto, detailing the efforts made to locate and contact the nonsigning inventor, including mailings to multiple addresses, an email communication, efforts to reach the inventor at multiple telephone numbers, and an internet search conducted to identify the most current address and telephone number for the nonsigning inventor. These materials provide an adequate showing that the nonsigning inventor cannot be reached or located after diligent effort. Item (4) is therefore satisfied.

## CONCLUSION

The Notification Of Abandonment (Form PCT/DO/EO/909) mailed 30 January 2006 is hereby **VACATED**.

The petition under 37 CFR 1.47(a) is **GRANTED**. The application is accepted without the signature of nonsigning inventor Matthew DOWNS.

As provided in 37 CFR 1.47(a), a notice of the filing of this application will be forwarded to the nonsigning inventor at the last known address set forth in the petition, and notice of the filing of the application under 37 CFR 1.47(a) will be published in the Official Gazette.

This application is being forwarded to the National Stage Processing Branch of the PCT Operations Division for further processing in accord with this decision. The date under 35 U.S.C. 371(c)(1), (c)(2), and (c)(4) is 22 February 2006.

Richard M. Ross
Attorney Advisor
Office of PCT Legal Administration
Telephone: (571) 272-3296
Facsimile: (571) 273-0459

20 APR 2006

UNITED STATES PATENT AND TRADEMARK OFFICE

Commissioner for Patents
United States Patent and Trademark Office
P.O. Box 1450
Alexandria, VA 22313-1450
www.uspto.gov

Matthew DROWNS
6480 Terraza Portico
Carlsbad, CA 92009

In re Application of: BECK, James, P., et al.
U.S. Application No.: 10/527,294
PCT No.: PCT/US2003/028388
International Filing Date: 10 September 2003
Priority Date: 10 September 2002
Attorney's Docket No.: 02-730-B5
For: SUBSTITUTED AMINOETHERS FOR THE TREATMENT OF ALZHEIMER'S DISEASE

Dear Dr. DROWNS:

You are identified as an inventor in the above identified United States patent application, filed under the provisions of 37 CFR 1.47(a) and 35 U.S.C. 116. Should a patent be granted, you will be designated as an inventor.

As a named inventor, you are entitled to inspect any paper in the file wrapper of the application, order copies of all or any part thereof (at a prepaid cost per 37 CFR 1.19) or to make your position of record in the application. Alternatively, you may arrange to do any of the preceding through a registered patent agent or attorney presenting written authorization from you. If you care to join in the application, counsel of record (see below) would presumably assist you. Joining in the application would entail the filing of an appropriate oath or declaration by you pursuant to 37 CFR 1.63.

Richard M. Ross
Attorney Advisor
Office of PCT Legal Administration
Telephone: (571) 272-3296
Facsimile: (571) 273-0459

Counsel of Record:
Steven J. SARUSSI
MCDONNELL BOEHNEN HULBERT & BERGHOFF LLP
300 S. Wacker Drive, 32nd Floor
Chicago, Il 60606

UNITED STATES PATENT AND TRADEMARK OFFICE

Commissioner for Patents
United States Patent and Trademark Office
P.O. Box 1450
Alexandria, VA 22313-1450
www.uspto.gov

15 AUG 2006

Tim A Cheatham
Mallinckrodt Inc
675 McDonnell Boulevard
P O Box 5840
St Louis MO 63134

| | |
|---|---|
| In re Application of<br>FAGO et al.<br>Application No.: 10/527,301<br>Int'l Filing Date: 07 October 2003<br>Priority Date: 17 October 2002<br>Attorney's Docket No.: 1628-WO/US<br>For: POLYMER PHARMACEUTICAL PIG.... | DECISION ON<br>REQUEST FOR<br>CORRECTED FILING RECEIPT |

This is in response to applicant's "Request for Corrected Filing Receipt" filed in the United States Patent and Trademark Office (USPTO) on 25 October 2005 and refiled on 11 August 2006, requesting a corrected filing receipt for the above referenced application.

On 02 June 2005, a "Notification of Acceptance" (Form PCT/DO/EO/903) was mailed to applicant, incorrectly indicating that the date of receipt of 35 U.S.C. 371(c)(1), (c)(2) and (c)(4) requirements was 09 March **2003**.

On 25 October 2005 and again on 11 August 2006, applicants filed the instant request for a corrected filing receipt. A review of the application file indicates that the date of receipt of 35 U.S.C. 371(c)(1), (c)(2) and (c)(4) requirements occurred on 09 March **2005** and the date of completion of all 35 U.S.C. 371 requirements was 09 March 2005.

Accordingly, the Notification of Acceptance and filing receipt mailed on 02 June 2005 is hereby **VACATED**.

## CONCLUSION

Applicant's request for a corrected filing receipt is **GRANTED**. The "Notification of Acceptance" (Form PCT/DO/EO/903) mailed 02 June 2005 is hereby **VACATED**.

The application is being forwarded for the National Stage Processing Branch of the Office of PCT Operations for issuance of a new Notification of Acceptance and corrected filing receipt, indicating that the date of receipt of 35 U.S.C. 371(c)(1), (c)(2) and (c)(4) requirements was **09 March 2005** and the date of completion of all 35 U.S.C. 371 requirements was **09 March 2005.**

Cynthia M. Kratz
Attorney Advisor
PCT Legal Office

Telephone: 571-272-3286

#6

UNITED STATES PATENT AND TRADEMARK OFFICE

COMMISSIONER FOR PATENTS
UNITED STATES PATENT AND TRADEMARK OFFICE
P.O. BOX 1450
ALEXANDRIA, VA 22313-1450
www.uspto.gov

30 MAY 2006

BARNES & THORNBURG, LLP
P.O. BOX 2786
CHICAGO, IL 60690-2786

| | | |
|---|---|---|
| In re Application of AMOS<br>U.S. Application No.: 10/527,308<br>PCT Application No.: PCT/GB03/02437<br>Int. Filing Date: 04 June 2003<br>Priority Date Claimed: 11 September 2002<br>Attorney Docket No.: 920602-98865<br>For: SPECTRAL DISCRIMINATION APPARATUS AND METHOD | : | DECISION |

This is in response to applicant's "Petition Pursuant to 37 C.F.R. §1.47(a)" filed 29 March 2006.

## BACKGROUND

On 04 June 2003, applicant filed international application PCT/GB03/02437, which claimed priority of an earlier United Kingdom application filed 11 September 2002. A copy of the international application was communicated to the USPTO from the International Bureau on 25 March 2004. The thirty-month period for paying the basic national fee in the United States expired on 11 March 2005.

On 09 March 2005, applicant filed national stage papers in the United States Designated/Elected Office (DO/EO/US). The submission was accompanied by, *inter alia*, the basic national fee required by 35 U.S.C. 371(c)(1).

On 25 November 2005, the DO/EO/US mailed a Notification of Missing Requirements Under 35 U.S.C. 371 (Form PCT/DO/EO/905), which indicated that an oath or declaration in compliance with 37 CFR 1.497 must be filed.

On 29 March 2006, applicant filed the present petition under 37 CFR 1.47(a).

## DISCUSSION

The petition states that joint inventor Louahab Noui refuses to sign the application papers. A review of the application file reveals that Louahab Noui is not listed as an inventor in the published international application. The DO/EO/US has not received a Notification of the Recording of a Change (Form PCT/IB/306) which indicates that Louahab Noui has been added as an inventor. If Louahab Noui is in fact a joint inventor, a proper petition under 37 CFR 1.497(d) should be submitted.

## CONCLUSION

For the reasons above, the petition under 37 CFR 1.47(a) is DISMISSED AS MOOT.

If reconsideration on the merits of this decision is desired, a proper response must be filed within TWO (2) MONTHS from the mail date of this decision.

Please direct further correspondence with respect to this matter to Mail Stop PCT, Commissioner for Patents, Office of PCT Legal Administration, P.O. Box 1450, Alexandria, Virginia 22313-1450, with the contents of the letter marked to the attention of the Office of PCT Legal Administration.

Bryan Tung
PCT Legal Examiner
PCT Legal Office

Telephone: 571-272-3303
Facsimile: 571-273-0459

2 2 NOV 2007

UNITED STATES PATENT AND TRADEMARK OFFICE

COMMISSIONER FOR PATENTS
UNITED STATES PATENT AND TRADEMARK OFFICE
P.O. BOX 1450
ALEXANDRIA, VA 22313-1450
www.uspto.gov

BARNES & THORNBURG LLP
P.O. BOX 2786
CHICAGO, IL 60690-2786

| | | |
|---|---|---|
| In re Application of AMOS | : | |
| U.S. Application No.: 10/527,308 | : | |
| PCT Application No.: PCT/GB03/02437 | : | |
| Int. Filing Date: 04 June 2003 | : | DECISION |
| Priority Date Claimed: 11 September 2002 | : | |
| Attorney Docket No.: 920602-98865 | : | |
| For: SPECTRAL DISCRIMINATION | : | |
| APPARATUS AND METHOD | : | |

This is in response to applicant's "Response to Communication Dated September 20, 2006" filed 26 September 2006.

## BACKGROUND

On 04 June 2003, applicant filed international application PCT/GB03/02437, which claimed priority of an earlier United Kingdom application filed 11 September 2002. A copy of the international application was communicated to the USPTO from the International Bureau on 25 March 2004. The thirty-month period for paying the basic national fee in the United States expired on 11 March 2005.

On 09 March 2005, applicant filed national stage papers in the United States Designated/Elected Office (DO/EO/US). The submission was accompanied by, *inter alia*, the basic national fee required by 35 U.S.C. 371(c)(1).

On 25 November 2005, the DO/EO/US mailed a Notification of Missing Requirements Under 35 U.S.C. 371 (Form PCT/DO/EO/905), which indicated that an oath or declaration in compliance with 37 CFR 1.497 must be filed.

On 29 March 2006, applicant filed a petition under 37 CFR 1.47(a).

On 30 May 2006, this Office mailed a decision dismissing the 29 March 2006 petition as moot on grounds that the purportedly non-signing inventor is not listed as an inventor in the international application.

On 10 July 2006, applicant filed a petition under 37 CFR 1.497(d).

On 21 August 2006, applicant filed a supplement to the petition filed 10 July 2006.

On 20 September 2006, this Office mailed a communication which stated that the 10 July 2006 petition was never received.

On 26 September 2006, applicant filed the present response.

## DISCUSSION

The evidence of record is sufficient to establish that the petition under 37 CFR 1.497(d) was originally filed on 10 July 2006. Specifically, the copy of the return postcard, which includes the petition under 37 CFR 1.497(d) in its itemized contents and which bears a USPTO date stamp of 10 July 2006, serves as prima facie evidence that the petition under 37 CFR 1.497(d) was received by the USPTO on 10 July 2006.

37 CFR 1.497(d) states,

> If the oath or declaration filed pursuant to 35 U.S.C. 371(c)(4) and this section names an inventive entity different from the inventive entity set forth in the international application, or if a change to the inventive entity has been effected under PCT Rule 92bis subsequent to the execution of any oath or declaration which was filed in the application under PCT Rule 4.17(iv) or this section and the inventive entity thus changed is different from the inventive entity identified in any such oath or declaration, applicant must submit:
>
> (1) A statement from each person being added as an inventor and from each person being deleted as an inventor that any error in inventorship in the international application occurred without deceptive intention on his or her part;
>
> (2) The processing fee set forth in § 1.17(i); and
>
> (3) If an assignment has been executed by any of the original named inventors, the written consent of the assignee (see § 3.73(b) of this chapter); and
>
> (4) Any new oath or declaration required by paragraph (f) of this section.

With regard to item (1) above, the requisite statement has not been provided.

With regard to item (2) above, the requisite processing fee has been provided.

With regard to item (3) above, written consent of the assignee has not been provided. Furthermore, assignment of the application has not been demonstrated by supplying a copy of the assignment agreement or specifying by reel and frame number where such assignment information is recorded.

With regard to item (4) above, an executed declaration has been provided.

## CONCLUSION

For the reasons above, the petition under 37 CFR 1.497(d) is DISMISSED without prejudice.

If reconsideration on the merits of this decision is desired, a proper response must be filed within TWO (2) MONTHS from the mail date of this decision. Failure to timely file a proper response will result in ABANDONMENT of the present application. Extensions of time under 37 CFR 1.136(a) are available.

Please direct further correspondence with respect to this matter to Mail Stop PCT, Commissioner for Patents, Office of PCT Legal Administration, P.O. Box 1450, Alexandria, Virginia 22313-1450, with the contents of the letter marked to the attention of the Office of PCT Legal Administration.

Bryan Lin

Bryan Lin
PCT Legal Examiner
PCT Legal Office

Telephone: 571-272-3303
Facsimile: 571-273-0459

UNITED STATES PATENT AND TRADEMARK OFFICE

COMMISSIONER FOR PATENTS
UNITED STATES PATENT AND TRADEMARK OFFICE
P.O. BOX 1450
ALEXANDRIA, VA 22313-1450
www.uspto.gov

12 MAY 2008

BARNES & THORNBURG LLP
P.O. BOX 2786
CHICAGO, IL 60690-2786

| | | |
|---|---|---|
| In re Application of AMOS | : | |
| U.S. Application No.: 10/527,308 | : | |
| PCT Application No.: PCT/GB03/02437 | : | |
| Int. Filing Date: 04 June 2003 | : | DECISION |
| Priority Date Claimed: 11 September 2002 | : | |
| Attorney Docket No.: 920602-98865 | : | |
| For: SPECTRAL DISCRIMINATION | : | |
| APPARATUS AND METHOD | : | |

This is in response to applicant's "Response to Communication Dated November 22, 2007 and Further Petition Pursuant to 37 C.F.R. §1.497(d)" filed 22 February 2008.

## BACKGROUND

On 04 June 2003, applicant filed international application PCT/GB03/02437, which claimed priority of an earlier United Kingdom application filed 11 September 2002. A copy of the international application was communicated to the USPTO from the International Bureau on 25 March 2004. The thirty-month period for paying the basic national fee in the United States expired on 11 March 2005.

On 09 March 2005, applicant filed national stage papers in the United States Designated/Elected Office (DO/EO/US). The submission was accompanied by, *inter alia*, the basic national fee required by 35 U.S.C. 371(c)(1).

On 25 November 2005, the DO/EO/US mailed a Notification of Missing Requirements Under 35 U.S.C. 371 (Form PCT/DO/EO/905), which indicated that an oath or declaration in compliance with 37 CFR 1.497 must be filed.

On 29 March 2006, applicant filed a petition under 37 CFR 1.47(a).

On 30 May 2006, this Office mailed a decision dismissing the 29 March 2006 petition as moot on grounds that the purportedly non-signing inventor is not listed as an inventor in the international application.

On 10 July 2006, applicant filed a petition under 37 CFR 1.497(d).

On 21 August 2006, applicant filed a supplement to the petition filed 10 July 2006.

On 22 November 2007, this Office mailed a decision dismissing the 10 July 2006 petition.

On 22 February 2008, applicant filed the present renewed petition under 37 CFR 1.497(d).

## DISCUSSION

37 CFR 1.497(d) states,

> If the oath or declaration filed pursuant to 35 U.S.C. 371(c)(4) and this section names an inventive entity different from the inventive entity set forth in the international application, or if a change to the inventive entity has been effected under PCT Rule 92bis subsequent to the execution of any oath or declaration which was filed in the application under PCT Rule 4.17(iv) or this section and the inventive entity thus changed is different from the inventive entity identified in any such oath or declaration, applicant must submit:
>
> (1) A statement from each person being added as an inventor and from each person being deleted as an inventor that any error in inventorship in the international application occurred without deceptive intention on his or her part;
>
> (2) The processing fee set forth in § 1.17(i); and
>
> (3) If an assignment has been executed by any of the original named inventors, the written consent of the assignee (see § 3.73(b) of this chapter); and
>
> (4) Any new oath or declaration required by paragraph (f) of this section.

Petitioner has previously satisfied items (2) and (4) above.

With regard to item (1) above, the requisite statement has been provided.

With regard to item (3) above, although the renewed petition establishes that the assignee Medical Research Council has ownership of the present application, written consent to the change of inventorship has not been provided.

## CONCLUSION

For the reasons above, the renewed petition under 37 CFR 1.497(d) is DISMISSED without prejudice.

If reconsideration on the merits of this decision is desired, a proper response must be filed within TWO (2) MONTHS from the mail date of this decision. Failure to timely file a proper

response will result in ABANDONMENT of the present application. Extensions of time under 37 CFR 1.136(a) are available.

Please direct further correspondence with respect to this matter to Mail Stop PCT, Commissioner for Patents, Office of PCT Legal Administration, P.O. Box 1450, Alexandria, Virginia 22313-1450, with the contents of the letter marked to the attention of the Office of PCT Legal Administration.

Bryan Lin

Bryan Lin
PCT Legal Examiner
PCT Legal Office

Telephone: 571-272-3303
Facsimile: 571-273-0459

UNITED STATES PATENT AND TRADEMARK OFFICE

COMMISSIONER FOR PATENTS
UNITED STATES PATENT AND TRADEMARK OFFICE
P.O. BOX 1450
ALEXANDRIA, VA 22313-1450
www.uspto.gov

24 JUL 2008

BARNES & THORNBURG LLP
P.O. BOX 2786
CHICAGO, IL 60690-2786

| | | |
|---|---|---|
| In re Application of AMOS | : | |
| U.S. Application No.: 10/527,308 | : | |
| PCT Application No.: PCT/GB03/02437 | : | |
| Int. Filing Date: 04 June 2003 | : | DECISION |
| Priority Date Claimed: 11 September 2002 | : | |
| Attorney Docket No.: 920602-98865 | : | |
| For: SPECTRAL DISCRIMINATION | : | |
| APPARATUS AND METHOD | : | |

This is in response to applicant's "Response to Decision Dated May 12, 2008 and Request for Reconsideration of Petition Pursuant to 37 C.F.R. §1.497(d)" filed 11 July 2008.

## BACKGROUND

On 04 June 2003, applicant filed international application PCT/GB03/02437, which claimed priority of an earlier United Kingdom application filed 11 September 2002. A copy of the international application was communicated to the USPTO from the International Bureau on 25 March 2004. The thirty-month period for paying the basic national fee in the United States expired on 11 March 2005.

On 09 March 2005, applicant filed national stage papers in the United States Designated/Elected Office (DO/EO/US). The submission was accompanied by, *inter alia*, the basic national fee required by 35 U.S.C. 371(c)(1).

On 25 November 2005, the DO/EO/US mailed a Notification of Missing Requirements Under 35 U.S.C. 371 (Form PCT/DO/EO/905), which indicated that an oath or declaration in compliance with 37 CFR 1.497 must be filed.

On 29 March 2006, applicant filed a petition under 37 CFR 1.47(a).

On 30 May 2006, this Office mailed a decision dismissing the 29 March 2006 petition as moot on grounds that the purportedly non-signing inventor is not listed as an inventor in the international application.

On 10 July 2006, applicant filed a petition under 37 CFR 1.497(d) along with an executed declaration.

On 21 August 2006, applicant filed a supplement to the petition filed 10 July 2006.

On 22 November 2007, this Office mailed a decision dismissing the 10 July 2006 petition.

On 22 February 2008, applicant filed a renewed petition under 37 CFR 1.497(d).

On 12 May 2008, this Office mailed a decision dismissing the 22 February 2008 petition.

On 11 July 2008, applicant filed the present renewed petition under 37 CFR 1.497(d).

## DISCUSSION

37 CFR 1.497(d) states,

> If the oath or declaration filed pursuant to 35 U.S.C. 371(c)(4) and this section names an inventive entity different from the inventive entity set forth in the international application, or if a change to the inventive entity has been effected under PCT Rule 92bis subsequent to the execution of any oath or declaration which was filed in the application under PCT Rule 4.17(iv) or this section and the inventive entity thus changed is different from the inventive entity identified in any such oath or declaration, applicant must submit:
>
> (1) A statement from each person being added as an inventor and from each person being deleted as an inventor that any error in inventorship in the international application occurred without deceptive intention on his or her part;
>
> (2) The processing fee set forth in § 1.17(i); and
>
> (3) If an assignment has been executed by any of the original named inventors, the written consent of the assignee (see § 3.73(b) of this chapter); and
>
> (4) Any new oath or declaration required by paragraph (f) of this section.

Petitioner has previously satisfied items (1), (2), and (4) above.

With regard to item (3) above, Petitioner has previously established that the assignee Medical Research Council has ownership of the present application. Furthermore, the present renewed petition includes appropriate written consent to the change of inventorship.

## CONCLUSION

For the reasons above, the renewed petition under 37 CFR 1.497(d) is GRANTED.

The application has an International Filing Date under 35 U.S.C. 363 of 04 June 2003, and a date under 35 U.S.C. 371(c)(1), (c)(2), and (c)(4) of 10 July 2006.

This application is being forwarded to the United States Designated/Elected Office (DO/EO/US) for further processing in accordance with this decision.

Bryan Lin

Bryan Lin
PCT Legal Examiner
PCT Legal Office

Telephone: 571-272-3303
Facsimile: 571-273-0459

30 SEP 2005

UNITED STATES PATENT and TRADEMARK OFFICE

COMMISSIONER FOR PATENTS
UNITED STATES PATENT AND TRADEMARK OFFICE
P.O BOX 1450
ALEXANDRIA, VA 22313-1450
www.uspto.gov

OBLON, SPIVAK, MCCLELLAND, MAIER & NEUSTADT, P.C.
1940 DUKE STREET
ALEXANDRIA VA 22314

| | | |
|---|---|---|
| In re Application of | : | DECISION ON |
| Patrick GANACHAUD et al | : | |
| Application No.: 10/527,321 | : | |
| PCT No.: PCT/EP03/10193 | : | |
| Int. Filing Date: 12 September 2003 | : | PETITION UNDER |
| Priority Date: 13 September 2002 | : | |
| Attorney Docket No.: 267319US3PCT | : | |
| For: SEALING AND SAFETY DEVICE FOR | : | |
| FILING A HOLLOW BODY WITH A LIQUID | : | 37 CFR 1.181 |

This decision is in response to the "REQUEST FOR CORRECTED NOTICE OR ACCEPTANCE" filed 17August 2005, which is being treated as a petition under 37 CFR 1.181 requesting that the correct date of completion of all USC 371 requirements be changed from May 24, 2005 to March 10, 2005.

## BACKGROUND

On 12 September 2003, this international application was filed, claiming an earliest priority date of 13 September 2002. The deadline for paying the basic national fee in the United States under 35 U.S.C. 371 and 37 CFR 1.495 was 13 March 2005.

On 10 March 2005, applicants filed a transmittal letter for entry into the national stage in the United States which was accompanied by, inter alia, the requisite basic national fee as required by 35 U.S.C. 371(c)(1), a copy of the international application. 35 U.S.C. 371(c)(2), but no executed declaration or oath was submitted at such time.

On 24 May 2005, applicants filed a second transmittal letter, which was accompanied by, inter alia, an executed declaration.

On 14 June 2005, the USPTO mailed a "NOTICE OF ACCEPTANCE OF APPLICATION UNDER 35 U.S.C. 371 AND 37 C.F.R. 1.495 (Form PCT/DO/EO/903)," indicating that date of receipt of 35 U.S.C. 371 (c)(1), (c)(2), and (c)(4) requirements is 24 May 2005, and a date of completion of all 35 USC 371 requirements is 24 May 2005.

On 17 August 2005, applicants filed the current petition pursuant 37 CFR 1.181 requesting a corrected filing receipt, stating that the date of completion of all 35 USC 371 requirements and 35 U.S.C. 371 (c)(1), (c)(2), and (c)(4) date is 10 March 2005.

Applicants state this is the correct date because the declaration was filed in the international application under PCT Rule 4.17(iv).

## DISCUSSION

In general, the requirement for an oath or declaration in compliance with 37 CFR **1.497**(a)-(b) will have been previously satisfied if a declaration in compliance with PCT Rule **4.17** (iv) and executed by all the inventors was submitted within the time limits provided in PCT Rule **26**$^{ter}$**.1** in the international phase.

The date that applicants competed the requirements under section (c) of 35 USC 371 is 25 May 2005, which the date that an executed declaration was filed with the Office. A review of the file reveals that declaration submitted under PCT Rule 4.17 was not executed; therefore, the declaration was not in compliance with 37 CFR 1.497(a)-(b).

Accordingly, the date of receipt of 35 U.S.C. 371 (c)(1), (c)(2), and (c)(4) requirements is 24 May 2005, and a date of completion of all 35 USC 371 requirements is 24 May 2005, which the date that an executed declaration was filed in the application.

## DECISION

The petition under 37 CFR 1.181 is **DISMISSED**.

If reconsideration of the merits of the petition under 37 CFR 1.181 is desired, applicant must file a request for reconsideration within **TWO (2) MONTHS** from the mail date of this Decision. Any reconsideration request should include a cover letter entitled "Renewed Petition Under 37 CFR 1.181." Extensions of time are available under 37 CFR 1.136(a).

Any further correspondence with respect to this matter should be addressed to the Mail Stop PCT, Commissioner for Patents, Office of PCT Legal Administration, P.O. Box 1450, Alexandria, Virginia 22313-1450, with the contents of the letter marked to the attention of the Office of PCT Legal Administration.

Rafael Bacares
PCT Legal Examiner
PCT Legal Office
Telephone: (571) 272-3276
Facsimile: (571) 273-0459

In general, the requirement for an oath or declaration in compliance with 37 CFR **1.497**(a)-(b) will have been previously satisfied if a declaration in compliance with PCT Rule **4.17** (iv) and executed by all the inventors was submitted within the time limits provided in PCT Rule **26**$^{ter}$**.1** in the international phase.

However, if the inventorship was changed in the international application under PCT Rule **92**$^{bis}$ such that the inventorship identified in the PCT Rule **4.17**(iv) declaration no longer corresponds to that of the international application (see 37 CFR **1.41(a)(4)**), then a new oath or declaration in accordance with 37 CFR **1.497**(a)-(b) will be required to enter the national stage. See 37 CFR **1.497**(f)(2).

Similarly, a new oath or declaration in compliance with 37 CFR **1.497**(a)-(b) is required where the PCT Rule **4.17(iv)** declaration was executed prior to a change in the international filing date pursuant to PCT Rule **20.2**. See 37 CFR **1.497**(f)(1). In addition, where a priority claim has been corrected or added pursuant to PCT Rule **26**$^{bis}$ after execution of the PCT Rule **4.17(iv)** declaration, then a supplemental oath or declaration, or an application data sheet, identifying the correct priority claim will be required. See 37 CFR **1.497**(g).

06 JUN 2006

UNITED STATES PATENT and TRADEMARK OFFICE

COMMISSIONER FOR PATENTS
UNITED STATES PATENT AND TRADEMARK OFFICE
P.O BOX 1450
ALEXANDRIA, VA 22313-1450
www.uspto.gov

OBLON, SPIVAK, MCCLELLAND, MAIER & NEUSTADT, P.C.
1940 DUKE STREET
ALEXANDRIA VA 22314

| | | |
|---|---|---|
| In re Application of | : | DECISION ON RENEWED |
| Patrick GANACHAUD et al | : | |
| Application No.: 10/527,321 | : | |
| PCT No.: PCT/EP03/10193 | : | |
| Int. Filing Date: 12 September 2003 | : | PETITION UNDER |
| Priority Date: 13 September 2002 | : | |
| Attorney Docket No.: 267319US3PCT | : | |
| For: SEALING AND SAFETY DEVICE FOR | : | |
| FILING A HOLLOW BODY WITH A LIQUID | : | 37 CFR 1.181 |

This decision is in response to the "RENEWED PETITION UNDER 37 CFR 1.181" filed 15 November 2005, indicating that the correct date of completion of all 35 USC 371 requirements is March 10, 2005.

## BACKGROUND

In a decision from this Office on November 15, 2005, the decision dismissed the petition filed on 17 August 2005 requesting to change the date of completion of all 35 USC 371 requirements to March 10, 2005.

Applicants filed this renewed petition on 15 November 2005 stating that March 10, 2005 is the correct date because an executed declaration was filed in the international application under PCT Rule 4.17(iv).

## DISCUSSION

In general, the requirement for an oath or declaration in compliance with 37 CFR **1.497**(a)-(b) will have been previously satisfied if a declaration in compliance with PCT Rule **4.17** (iv) and executed by all the inventors was submitted within the time limits provided in PCT Rule **26**$^{ter}$**.1** in the international phase.

The date that applicants competed the requirements under section (c) of 35 USC 371 is 24 May 2005, which is the date that a properly executed declaration was filed with the Office. A review of the file reveals that declaration submitted under PCT Rule 4.17 was not properly executed. An executed declaration was filed on May 23, 2005 after the PCT request had been filed. The executed declaration, however, did not list the international application number as required, note section VIII-4-1 of the PCT Request. Therefore, the declaration was not in compliance with 37 CFR 1.497(a)-(b).

Accordingly, the date of receipt of 35 U.S.C. 371 (c)(1), (c)(2), and (c)(4) requirements is 24 May 2005, and a date of completion of all 35 USC 371 requirements is 24 May 2005, which the date that a proper executed declaration was filed in the application.

## DECISION

The renewed petition under 37 CFR 1.181 is **DISMISSED**.

If reconsideration of the merits of the petition under 37 CFR 1.181 is desired, applicant must file a request for reconsideration within **TWO (2) MONTHS** from the mail date of this Decision. Any reconsideration request should include a cover letter entitled "Second Renewed Petition Under 37 CFR 1.181." Extensions of time are available under 37 CFR 1.136(a).

Any further correspondence with respect to this matter should be addressed to the Mail Stop PCT, Commissioner for Patents, Office of PCT Legal Administration, P.O. Box 1450, Alexandria, Virginia 22313-1450, with the contents of the letter marked to the attention of the Office of PCT Legal Administration.

Rafael Bacares
PCT Legal Examiner
PCT Legal Office
Telephone: (571) 272-3276
Facsimile: (571) 273-0459

UNITED STATES PATENT AND TRADEMARK OFFICE

COMMISSIONER FOR PATENTS
UNITED STATES PATENT AND TRADEMARK OFFICE
P.O. BOX 1450
ALEXANDRIA, VA 22313-1450
www.uspto.gov

WORKMAN NYDEGGER
(F/K/A WORKMAN NYDEGGER & SEELEY)
60 EAST SOUTH TEMPLE
1000 EAGLE GATE TOWER
SALT LAKE CITY UT 84111

**COPY MAILED**

JAN 17 2007

**OFFICE OF PETITIONS**

Applicant: Nunoya et al.
Appl. No.: 10/527,355
International Filing Date: March 30, 2004
Title: OPTICAL SEMICONDUCTOR DEVICE AND OPTICAL SEMICONDUCTOR INTEGRATED CIRCUIT
Attorney Docket No.: 14321.67
Pub. No.: US 2006/0050752 A1
Pub. Date: March 9, 2006

This is a decision on the request for a corrected patent application publication under 37 CFR 1.221(b), received on May 9, 2006, for the above-identified application

The request is DISMISSED.

Applicant requests that the application be republished because the patent application publication contains a material error, on the front page of the publication as the title of the invention "OPTICAL SEMICONDUCTOR DEVICE AND OPTICAL SEMICONDUCTOR INTEGRATED CIRCUIT" is misprinted as OPTICAL SEMICONDUCTOR DEVICE AND OPTICAL SEMICONDUCTOR IN TEGRATED CIRCUIT".

37 CFR 1.221 (b) is applicable "only when the Office makes a material mistake which is apparent from Office records.... Any request for a corrected publication or revised patent application publication other than provided as provided in paragraph (a) of this section must be filed within two months from the date of the patent application publication. This period is not extendable." A material mistake must affect the public's ability to appreciate the technical disclosure of the patent application publication, to determine the scope of the patent application publication, or to determine the scope of the provisional rights that an applicant may seek to enforce upon issuance of a patent. [1]

The error noted by requestor on the front page of the publication wherein "INTEGRATED" is misprinted as "IN TEGRATED" is not a material Office error under 37 CFR 1.221. The error noted by requestor is a minor typographical error, which does not affect the public's ability to

[1] Changes to Implement Eighteen-Month Publication of Patent Applications, 65 FR 57023, 57038 (Sept. 20, 2000), 1239, Off. Gaz. Pat. Office Notices 63, 75 (Oct. 10, 2000) (final rule).

appreciate the technical disclosure of the patent application publication, to determine the scope of the patent application publication, or to determine the scope of the provisional rights that an applicant may seek to enforce upon issuance of a patent.

On November 16, 2005, a Filing Receipt was mailed by the Office, which listed the title as published. To avoid this type of problem in the future, applicant's representative should make request a corrected filing receipt.

The applicant is advised that a "request for republication of an application previously published" may be filed under 37 CFR 1.221 (a). Such a request for republication "must include a copy of the application compliance with the Office's electronic filing system requirements and be accompanied by the publication fee set forth in § 1.18 (d) and the processing fee set forth in § 1.17 (i)." If the request for republication does not comply with the electronic filing system requirements, the republication will not take place and the publication fee set forth in § 1.18 (d) will be refunded. The processing fee will be retained.

Any request for republication under 37 CFR 1.221(a), must be submitted via the EFS system and questions or request for reconsideration of the decision, should be addressed as follows:

By mail to: Mail Stop PGPUB
Commissioner for Patents
P.O. Box 1450
Alexandria, Va. 22313-1450

By facsimile: 571-273-8300

Inquiries relating to this matter may be directed to Mark Polutta at (571) 272-7709 (voice).

Mark Polutta
Senior Legal Advisor
Office of Patent Legal Administration
Office of the Deputy Commissioner
for Patent Examination Policy

UNITED STATES PATENT AND TRADEMARK OFFICE

UNITED STATES DEPARTMENT OF COMMERCE
United States Patent and Trademark Office
Address: COMMISSIONER FOR PATENTS
P.O. Box 1450
Alexandria, Virginia 22313-1450
www.uspto.gov

CONNOLLY BOVE LODGE & HUTZ, LLP
P O BOX 2207
WILMINGTON, DE 19899

Mail Date: 04/21/2010

| | | |
|---|---|---|
| **Applicant** | : Ute Heim | : DECISION ON REQUEST FOR |
| **Patent Number** | : 7589254 | : RECALCULATION of PATENT |
| **Issue Date** | : 09/15/2009 | : TERM ADJUSTMENT IN VIEW |
| **Appliction No** | : 10/527,375 | : OF WYETH AND NOTICE OF INTENT TO |
| **Filed** | : 03/10/2005 | : ISSUE CERTIFICATE OF CORRECTION |
| | | : |

The Request for Recalculation is **GRANTED** to the extent indicated.

The patent term adjustment has been determined to be **466** days. The USPTO will *sua sponte* issue a certificate of correction reflecting the amount of PTA days determined by the recalculation.

Prior to the issuance of the certificate of correction, the USPTO will afford patentee an opportunity to be heard and request reconsideration. Accordingly, patentee has **one month or thirty (30) days**, whichever is longer, to file a request for reconsideration of this patent term adjustment calculation. See 35 U.S.C. 154(b)(3)(B)(ii) and 37 CFR 1.322(a)(4). No extensions of time will be granted under 37 CFR 1.136.

Patentee should use document code PET.OP if electronically filing a request for reconsideration of this patent term adjustment calculation. The patentee must also include the information required by 37 CFR 1.705(b)(2) and the fee required by 37 CFR 1.18(e). If patentee does not file a timely request for reconsideration of this patent term adjustment calculation including the information required by 37 CFR 1.705(b)(2) and the fee required by 37 CFR 1.18(e), the USPTO will issue a certificate of correction reflecting the PTA determination noted above.

Patentee should be aware that in order to preserve the right to review in the United States District Court for the District of Columbia of the USPTO patent term adjustment determination, patentee must ensure that he or she also take the steps required under 35 U.S.C. 154(b)(4)(A) in a timely manner. Nothing in the request for recalculation should be construed as providing an alternative time frame for commencing a civil action under 35 U.S.C. 154(b)(4)(A).

Any questions concerning this decision should be directed to the Office of Patent Legal Administration at 571-272-7702.

UNITED STATES PATENT AND TRADEMARK OFFICE

Commissioner for Patents
United States Patent and Trademark Office
P.O. Box 1450
Alexandria, VA 22313-1450
www.uspto.gov

**BARBARA A. SHIMEI**
**DIRECTOR, PATENTS & LICENSING**
**BAYER HEALTHCARE LLC - PHARMACEUTICALS**
**555 WHITE PLAINS ROAD, THIRD FLOOR**
**TARRYTOWN, NY 10591**

**COPY MAILED**

SEP 2 4 2008

**OFFICE OF PETITIONS**

| | | |
|---|---|---|
| In re Application of | : | |
| Shimada et al. | : | |
| Application No. 10/527,376 | : | ON PETITION |
| Filed: October 14, 2005 | : | |
| Attorney Docket No. RCK-36 | : | |

This is a decision on the petition under the unintentional provisions of 37 CFR 1.137(b), filed July 1, 2008, to revive the above-identified application.

There is no indication that the petition is signed by a registered patent attorney or patent agent of record. However, in accordance with 37 CFR 1.34, the signature of Mr. Gabriel J. McCool appearing on the correspondence shall constitute a representation to the United States Patent and Trademark Office that he is authorized to represent the particular party on whose behalf he acts. If, Mr. McCool desires to receive correspondence regarding this file, the appropriate power of attorney documents must be submitted. A courtesy copy of this decision is being mailed to Mr. McCool, the petitioner herein. However, until otherwise instructed, all future correspondence regarding this application file will be directed solely to the above-noted correspondence address of record.

The petition is **GRANTED**.

The application became abandoned for failure to reply in a timely manner to the non-final Office action mailed, August 9, 2007, which set a shortened statutory period for reply of three (3) months. No extensions of time under the provisions of 37 CFR 1.136(a) were obtained. Accordingly, the application became abandoned on November 10, 2007. A Notice of Abandonment was mailed May 30, 2008.

The petition satisfies the requirements of 37 CFR 1.137(b) in that petitioner has supplied (1) the reply in the form of an Amendment, (2) the petition fee of $1,540, and (3) a proper statement of unintentional delay.

It is not apparent whether the statement of unintentional delay was signed by a person who would have been in a position of knowing that the entire delay in filing the required reply from the due date for the reply until the filing of a grantable petition pursuant to 37 CFR 1.137(b) was unintentional. Nevertheless, in accordance with 37 CFR 10.18, the statement is accepted as constituting a certification of unintentional delay. However, in the event that petitioner has no knowledge that the delay was unintentional, petitioner must make such an inquiry to ascertain that, in fact, the delay was unintentional. If petitioner discovers that the delay was intentional, petitioner must notify the Office.

Telephone inquiries concerning this decision should be directed to Alicia Kelley at (571) 272-6059.

This application is being referred to Technology Center 1624 for further examination on the merits.

Sherry D. Brinkley
Petitions Examiner
Office of Petitions

cc: GABRIEL J. MCCOOL
EDWARDS ANGELL PALMER & DODGE LLP
P.O. BOX 55874
BOSTON, MASSACHUSETTS 02205

UNITED STATES PATENT AND TRADEMARK OFFICE

Commissioner for Patents
United States Patent and Trademark Office
P.O. Box 1450
Alexandria, VA 22313-1450
www.uspto.gov

**COPY MAILED**

AUG 26 2009

**OFFICE OF PETITIONS**

SWISS TANNER, P.C.
P.O. BOX 1749
FOUR MAIN STREET, SUITE 100
LOS ALTOS, CA 94022

In re Application of

Francine S. Farouz et al
Application No. 10/527,384
Filed: December 19, 2006
Attorney Docket No. 342837-2102

DECISION ON PETITION
TO WITHDRAW
FROM RECORD

This is a decision on the Request to Withdraw as attorney or agent under 37 C.F.R. § 1.36(b) or 37 C.F.R. § 10.40 filed July 14, 2009.

The request is **APPROVED**.

A review of the file record indicates that Antoinette F. Konski: (1) does not have power of attorney in this patent application; and (2) has been employed or otherwise engaged in the proceedings in this patent application. In view of the present decision, Antoinette F. Konski has been withdrawn from the present application and may not prepare or submit papers under 37 C.F.R. § 1.34, or correspond in any manner in this application unless appointed in an acceptable power of attorney under 37 C.F.R. § 1.32(b).

Telephone inquires concerning this decision should be directed to Irvin Dingle at 571-272-3210.

Irvin Dingle
Petitions Examiner
Office of Petitions

cc: Antoinette F. Konski
975 Page Mill Road
Palo Alto, CA 94304-1013

#6

UNITED STATES PATENT AND TRADEMARK OFFICE

Commissioner for Patents
United States Patent and Trademark Office
P.O. Box 1450
Alexandria, VA 22313-1450
www.uspto.gov

24 JAN 2006

04743
MARSHALL, GERSTEIN & BORUN LLP
233 S. Wacker Drive, Suite 6300
Sears Tower
Chicago, IL 60606

| | | |
|---|---|---|
| In re Application of | : | |
| VILLARI *et al* | : | |
| U.S. Application No.: 10/527,385 | : | |
| PCT No.: PCT/EP2003/010097 | : | **DECISION** |
| Int. Filing Date: 11 September 2003 | : | |
| Priority Date: 13 September 2002 | : | |
| Attorney Docket No.: 30882/SCG5204 | : | |
| For: FIREPROOF GLAZING UNIT | : | |

This decision is in response to apPetitionerspetition under 37 CFR 1.47(a) filed with the United States Designated/Elected Office (DO/EO/US) on 29 August 2005.

## BACKGROUND

On 11 August 2005, the DO/EO/US mailed a Notification of Missing Requirements Under 35 U.S.C. 371 (Form PCT/DO/EO/905) indicating that the current declaration under PCT Rule 4.17 was not in compliance with 37 CFR 1.497(a) and (b). Applicants were given two months to respond with extensions of time available.

On 29 August 2005, applicants filed a response which was accompanied by, *inter alia*, a petition under 37 CFR 1.47(a); a $130.00 petition fee; a $130.00 surcharge fee; a declaration by Valentino Villari; a declaration by Christine Davids; and copies of internet searches, postal receipts and correspondence.

## DISCUSSION

In response to the Form PCT/DO/EO/905, applicants submitted a petition under 37 CFR 1.47(a) claiming that the nonsigning inventor was refusing to cooperate, or unable to be located.

A petition under 37 CFR 1.47(a) must be accompanied by: (1) the required petition fee; (2) factual proof that the missing joint inventor(s) cannot be located or refuses to cooperate; (3) a statement of the last known address(es) of the nonsigning joint inventor; (4) and an oath or declaration executed by the signing joint inventor(s) on their behalf and on behalf of the nonsigning joint inventor.

Concerning item (1), the fee for a petition under 37 CFR 1.47 has changed to

$200.00. Applicants submitted a $130.00 petition fee. The additional fee of $70.00 has been charged to Deposit Account No. 13-2855 as authorized.

With regards to item (3), the last known address of the nonsigning joint inventor, Albert van Oijen, is listed as:

De Burkel 3
NL-5851 CC Afferden
The Netherlands

Regarding item (2), the 37 CFR 1.47(a) applicants claim that Mr. Oijen refuses to cooperate, or in the alternative cannot be located.

**Refusal to Cooperate**

Section 409.03(d) of the MPEP states, in part:

> A refusal by an inventor to sign an oath or declaration when the inventor has not been presented with the application papers does not itself suggest that the inventor is refusing to join the application unless it is clear that the inventor understands exactly what he or she is being asked to sign and refuses to accept the application papers.

In her declaration, Ms. Davids states that a complete copy of the application was submitted to the nonsigning inventor on 04 April 2005 at his last known address. However, the documents were not claimed by Mr. Oijen. Further, there was no evidence that he refused to accept delivery. Thus, a refusal cannot be shown without evidence that the nonsigning inventor has been presented with a complete copy of the application, or that he refused to accept delivery of the application.

It is also noted that the documentary evidence provided with the petition is in a foreign language without accompanying English translations. The Office does not accept foreign language documents as evidence without a corresponding English translation. Further, the EPO priority document referenced in the declaration of Mr. Villari is not sufficient to meet the requirement of the MPEP.

**Cannot Be Located**

Applicants' burden in showing that an inventor cannot be located is explained in section 409.03(d) of the MPEP which states, in part:

> Where inability to find or reach a nonsigning inventor 'after diligent effort'

> is the reason for filing under 37 CFR 1.47, an affidavit or declaration of the facts should be submitted that fully describes the exact facts which are relied on to establish that a diligent effort was made . . .
>
> The statement of facts must be signed, where at all possible, by a person having firsthand knowledge of the facts recited therein. Statements based on hearsay will not normally be accepted. Copies of documentary evidence such as internet searches, certified mail return receipts, cover letters of instructions, telegrams, that support a finding that the nonsigning inventor could not be found or reached should be made part of the statement. The steps taken to locate the whereabouts of the nonsigning inventor should be included in the statement of facts. It is important that the statement contain facts as opposed to conclusions.

In this case, counsel has outlined the steps taken to locate the nonsigning inventor in the petition. But it is not clear if counsel has the requisite firsthand knowledge required by the MPEP. Moreover, the documentary evidence submitted is also in a foreign language without an accompanying English translation. Petitioner must provide a translation of the results of these searches. Petitioner must also identify who performed these searches for the nonsigning inventor and provide a declaration of this person, if possible.

Concerning item (4), section 409.03(a) of the MPEP requires all available joint inventors to file an application "on behalf of" themselves and on behalf of a joint inventor who "cannot be found or reached after diligent effort" or who refuses to "join in an application."

Here, a declaration signed by one of the two joint inventors pursuant to PCT Rule 4.17 was submitted in the international application. However, this declaration was filed on 12 December 2003 pursuant to PCT Rule 26*ter*. As such, the declaration must be directed to the international application. There is no evidence that the declaration complied with this requirement.

For these reasons, item (2) and (4) of 37 CFR 1.47(a) are not yet satisfied.

## CONCLUSION

Applicants' petition under 37 CFR 1.47(a) is **DISMISSED** without prejudice.

If reconsideration on the merits of this petition is desired, a proper response must be filed within **TWO (2) MONTHS** from the mail date of this decision. No additional petition fee is required.

Any further correspondence with respect to this matter deposited with the United States Postal Service should be addressed to the Mail Stop PCT, Commissioner for Patents, Office of PCT Legal Administration, P.O. Box 1450, Alexandria, Virginia 22313-1450, with the contents of the letter marked to the attention of the Office of PCT Legal Administration.

James Thomson

James Thomson
Attorney Advisor
Office of PCT Legal Administration

Tel.: (571) 272-3302

#8

UNITED STATES PATENT AND TRADEMARK OFFICE

Commissioner for Patents
United States Patent and Trademark Office
P.O. Box 1450
Alexandria, VA 22313-1450
www.uspto.gov

14 SEP 2006

04743
MARSHALL, GERSTEIN & BORUN LLP
233 S. Wacker Drive, Suite 6300
Sears Tower
Chicago, IL 60606

| | | |
|---|---|---|
| In re Application of | : | |
| VILLARI *et al* | : | |
| U.S. Application No.: 10/527,385 | : | |
| PCT No.: PCT/EP2003/010097 | : | **DECISION** |
| Int. Filing Date: 11 September 2003 | : | |
| Priority Date: 13 September 2002 | : | |
| Attorney Docket No.: 30882/SCG5204 | : | |
| For: FIREPROOF GLAZING UNIT | : | |

This decision is in response to the "Renewed Petition under 37 C.F.R. § 1.47(a)" filed with the United States Designated/Elected Office (DO/EO/US) on 04 April 2006.

## BACKGROUND

On 24 January 2006, a decision dismissing applicants' petition under 37 CFR 1.47(a) was mailed. Petitioners failed to meet item (2) and item (4) of 37 CFR 1.47(a).

On 04 April 2006, the 37 CFR 1.47(b) applicant submitted a renewed petition under 37 CFR 1.47(a) which was accompanied by, *inter alia*, a declaration executed by an inventor on behalf of the nonsigning inventor, a one-month extension and fee, a statement of facts, and exhibits A - F.

## DISCUSSION

The decision dated 24 January 2006 determined that the petitioners failed to satisfy item (2) of 37 CFR 1.47(a) with regards to the nonsigning joint inventor, Albert van Oijen. In addition, the declaration filed in the international application pursuant to PCT Rule 26*ter* was not directed to the international application as required. As such, item (4) of 37 CFR 1.47(a) was also not satisfied.

Regarding item (2), the 37 CFR 1.47(a) applicants submitted a statement of facts by counsel claiming that a diligent search was made in attempting to locate the nonsigning inventor. Petitioners also referred the undersigned to paragraph eight of the statement of facts by Christine Davids filed in the original petition contending that this shows an explicit refusal by Mr. Van Oijen to cooperate.

Applicants' claim that the nonsigning inventor expressly refused to cooperate will

be discussed first. Section 409.03(d) of the MPEP requires that a copy of the application be presented to the nonsigning inventor prior to acceptance of a refusal. In this case, the purported refusal was made to Ms. Davids on 21 March 2005. However, there was no evidence submitted that a complete copy of the international application was presented to Mr. van Oijen prior to 21 March 2005. The EPO priority document presented to Mr. van Oijen in December 2002 by Mr. Villari is not sufficient to meet this requirement. Accordingly, the purported refusal made on 21 March 2005 is ineffective.

Petitioners also submitted a statement of facts by counsel which included documentary evidence (with accompanying English translations) as evidence of a search for a new address for the nonsigning inventor. This is sufficient evidence to show that a diligent effort was made to locate Mr. van Oijen. This new evidence along with the proof submitted in the initial petition is sufficient to satisfy Item (2) of 37 CFR 1.47(a).

Concerning item (4), petitioners have submitted a new declaration signed by Valentino Villari on behalf of Albert van Oijen. This declaration complies with 37 CFR 1.497(a) and (b) and meets the requirements of MPEP § 409.03(a)(A).

All the requirements of 37 CFR 1.47(a) are now complete.

## CONCLUSION

Applicants' renewed petition under 37 CFR 1.47(a) is **GRANTED**.

Applicants have completed the requirements for acceptance under 35 U.S.C. 371(c). The application has an international filing date of 11 September 2003 under 35 U.S.C. 363, and a 35 U.S.C. 371 date of 04 April 2006.

As provided in 37 CFR 1.47(a), a notice of the filing of this application will be forwarded to the non-signing inventor at his last known address of record and will be published in the Official Gazette. This application is being forwarded to the National Stage Processing Division of the Office of PCT Operations for continued processing.

James Thomson

James Thomson
Attorney Advisor
Office of PCT Legal Administration

Tel.: (571) 272-3302

UNITED STATES PATENT AND TRADEMARK OFFICE

Commissioner for Patents
United States Patent and Trademark Office
P.O. Box 1450
Alexandria, VA 22313-1450
www.uspto.gov

14 SEP 2006

Albert van Oijen
De Burkel 3
NL-5851 CC Afferden
The Netherlands

In re Application of
VILLARI *et al*
U.S. Application No.: 10/527,385
PCT No.: PCT/EP2003/010097
Int. Filing Date: 11 September 2003
Priority Date: 13 September 2002
Attorney Docket No.: 30882/SCG5204
For: FIREPROOF GLAZING UNIT

Dear Mr. Van Oijen:

You are named as legal representative of a deceased inventor in the above-captioned United States national stage application, filed under the provisions of 37 CFR 1.47(a) and 35 U.S.C. 116. Should a patent be granted, Albert van Oijen will be designated as an inventor.

As a legal representative of a named inventor, you are entitled to inspect any paper in the file wrapper of the application, order copies of all or any part thereof (at a prepaid cost per 37 CFR 1.19) or to make your position of record in the application. Alternatively, you may arrange to do any of the preceding through a registered patent agent or attorney presenting written authorization from you. The counsel for the applicant is listed below. Joining in the application would entail the filing of an appropriate oath or declaration by you pursuant to 37 CFR 1.63.

James Thomson

James Thomson
Attorney Advisor
Office of PCT Legal Administration

Tel.: (571) 272-3302

MARSHALL, GERSTEIN & BORUN LLP
233 S. Wacker Drive, Suite 6300
Sears Tower
Chicago, IL 60606

UNITED STATES PATENT AND TRADEMARK OFFICE

Commissioner for Patents
United States Patent and Trademark Office
P.O. Box 1450
Alexandria, VA 22313-1450
www.uspto.gov

COPY MAILED

SEP 14 2009

OFFICE OF PETITIONS

**Barbara A. Shimei**
**Director, Patents & Licensing**
**Bayer HealthCare LLC – Pharmaceuticals**
**555 White Plains Road, Third Floor**
**Tarrytown, NY 10591**

| | | |
|---|---|---|
| In re Application of | : | |
| Heike Gielen-Haertwig et al. | : | |
| Application No. 10/527,391 | : | DECISION ON PETITION |
| Filed: October 21, 2005 | : | |
| Attorney Docket No. LE A 36 248 | : | |

This is a decision on the petition under 37 CFR 1.137(b), filed July 30, 2009, to revive the above-identified application.

The petition is **GRANTED**.

This application became abandoned for failure to timely pay the issue and publication fees on or before July 10, 2009, as required by the Notice of Allowance and Fee(s) Due, mailed February April 10, 2009. Accordingly, the date of abandonment of this application is July 11, 2009. A Notice of Abandonment was mailed on July 28, 2009.

The petition satisfies the requirements of 37 CFR 1.137(b) in that petitioner has supplied (1) the reply in the form of payment of the issue fee of $1,510 and the publication fee of $300, (2) the petition fee of $1,620, and (3) a proper statement of unintentional delay. Accordingly, the issue and publication fees are accepted as being unintentionally delayed.

It is not apparent whether the person signing the statement of unintentional delay was in a position to have firsthand or direct knowledge of the facts and circumstances of the delay at issue. Nevertheless, such statement is being treated as having been made as the result of a reasonable inquiry into the facts and circumstances of such delay. See 37 CFR 10.18(b) and Changes to Patent Practice and Procedure; Final Rule Notice, 62 Fed. Reg. 53131, 53178 (October 10, 1997), 1203 Off. Gaz. Pat. Office 63, 103 (October 21, 1997). In the event that such an inquiry has not been made, petitioner must make such an inquiry. If such inquiry results in the discovery that it is not correct that the entire delay in filing the required reply from the due

date for the reply until the filing of a grantable petition pursuant to 37 CFR 1.137(b) was unintentional, petitioner must notify the Office.

The application file does not indicate a change of address has been filed in this case, although the address given on the petition differs from the address of record. A change of address should be filed in this case in accordance with MPEP 601.03. A courtesy copy of this decision is being mailed to the address noted on the petition. However, until otherwise instructed, all future correspondence regarding this application will be mailed solely to the address of record.

Telephone inquiries concerning this decision should be directed to Kimberly Inabinet at (571) 272-4618.

This application is being referred to the Office of Data Management for further processing into a patent.

Carl Friedman
Petitions Examiner
Office of Petitions

cc: Gabriel J. McCool
Edwards Angell Palmer & Dodge, LLP
P.O. Box 55874
Boston, MA 02205

UNITED STATES PATENT AND TRADEMARK OFFICE

Commissioner for Patents
United States Patent and Trademark Office
P.O. Box 1450
Alexandria, VA 22313-1450
www.uspto.gov

**Barbara A. Shimei**
**Director, Patents & Licensing**
**Bayer HealthCare LLC - Pharmaceuticals**
**555 White Plains Road, Third Floor**
**Tarrytown NY 10591**

MAILED

NOV 02 2009

OFFICE OF PETITIONS

| | | |
|---|---|---|
| In re Application of | : | |
| Heike Gielen-Haertwig, et al. | : | |
| Application No. 10/527,391 | : | DECISION GRANTING PETITION |
| Filed: October 21, 2005 | : | UNDER 37 CFR 1.313(c)(2) |
| Attorney Docket No. LE A 36 248 | : | |

This is a decision on the petition under 37 CFR 1.313(c)(2), filed October 30, 2009, to withdraw the above-identified application from issue after payment of the issue fee.

The petition is **GRANTED**.

The above-identified application is withdrawn from issue for consideration of a submission under 37 CFR 1.114 (request for continued examination). *See* 37 CFR 1.313(c)(2).

***Petitioner is advised that the issue fee paid on July 31, 2009 cannot be refunded. If, however, this application is again allowed, petitioner may request that it be applied towards the issue fee required by the new Notice of Allowance.***[1]

Telephone inquiries should be directed to Terri Johnson at (571) 272-2991.

This application is being referred to Technology Center AU 1624 for processing of the request for continued examination under 37 CFR 1.114 and for consideration of the concurrently filed information disclosure statement.

There is no indication that the person signing the petition was ever given a power of attorney to prosecute the application. If the person signing the petition desires to receive future correspondence regarding this application, the appropriate power of attorney documents must be submitted. While a courtesy copy of this decision is being mailed to the person signing the

[1] *The request to apply the issue fee to the new Notice may be satisfied by completing and returning the new Part B – Fee(s) Transmittal Form (along with any balance due at the time of submission). Petitioner is advised that the Issue Fee Transmittal Form must be completed and timely submitted to avoid abandonment of the application.*

petition, all future correspondence will be directed to the address currently of record until appropriate instructions are received.

Terri Johnson
Petitions Examiner
Office of Petitions

cc: **EDWARDS ANGELL PALMER & DODGE LLP**
**P.O. Box 55874**
**Boston, MA 02205**

11 APR [redacted]6

#6

UNITED STATES PATENT AND TRADEMARK OFFICE

Commissioner for Patents
United States Patent and Trademark Office
P.O. Box 1450
Alexandria, VA 22313-1450
www.uspto.gov

CAHILL, VON HELLENS & GLAZER
155 Park One
2141 E. Highland Avenue
Phoenix, AZ 85016

| | | |
|---|---|---|
| In re Application of: | : | |
| AROUSSI, Abdelwahab, et al. | : | DECISION ON PETITION UNDER |
| U.S. Application No.: 10/527,444 | : | 37 CFR 1.47(a) |
| PCT No.: PCT/GB03/03919 | : | |
| International Filing Date: 09 September 2003 | : | |
| Priority Date: 09 September 2002 | : | |
| Attorney's Docket No.: 6817-A-1 | : | |
| For: FLOW HOMOGENISER | : | |

This decision is issued in response to applicants' "Petition Under 37 CFR 1.47(a)" filed 28 September 2005. Deposit Account No. 03-0088 will be charged the required petition fee.

## BACKGROUND

On 09 September 2003, applicants filed international application PCT/GB03/03919. The application claimed a priority date of 09 September 2002 and designated the United States. On 18 March 2004, the International Bureau (IB) communicated a copy of the international application to the United States Patent and Trademark Office. The deadline for submission of the basic national fee was thirty months from the priority date, i.e., 09 March 2005.

On 09 March 2005, applicants filed a Transmittal Letter for entry into the national stage in the United States accompanied by, among other materials, payment of the basic national fee.

On 31 May 2005, the United States Designated/Elected Office (DO/EO/US) mailed a Notification Of Missing Requirement (Form PCT/DO/EO/905) indicating that an executed declaration in compliance with 37 CFR 1.497 and a translation of the international application into English were required.

On 28 October 2005, applicants filed a response to the Notification Of Missing Requirements (with required extension fee) which included a declaration executed by one of the three inventors, and the petition under 37 CFR 1.47(a) considered herein. The petition seeks acceptance of the application without the signature of inventors Faycal BAHRI and Mohamed MENACER, whom applicants assert have refused to execute the application. The submission also correctly notes that, because the application was filed in English, an English translation of the international application (and the processing fee for late-filing of such translation) is not required here.

## DISCUSSION

A grantable petition under 37 CFR 1.47(a) must be accompanied by: (1) the fee under 37 CFR 1.17; (2) a statement of the last known address of the nonsigning inventor; (3) an oath or declaration executed by the other inventors on behalf of themselves and the nonsigning inventor; and (4) factual proof that the inventor refuses to execute the application or cannot be reached after diligent effort.

Here, applicants have authorized a charge to Deposit Account No 03-0088 for required fees, filed the required petition fee, and the petition expressly states the last known addresses of the nonsigning inventors. Items (1) and (2) are therefore satisfied.

Regarding item (3), section 409.03(a) of the Manual of Patent Examining Practice (MPEP) states that:

> An oath or declaration signed by all the available joint inventors with the signature block of the nonsigning inventor(s) left blank may be treated as having been signed by all the joint inventors on behalf of the nonsigning inventor(s), unless otherwise indicated.

Applicants have filed a declaration executed by inventor Abdelwahab AROUSSI and containing unsigned signature blocks for the nonsigning inventors Faycal BAHRI and Mohamed MENACER. This declaration satisfies item (3).

Regarding item (4), where it is asserted that an inventor has refused to execute the application papers, section 409.03(d) of the MPEP states that a "copy of the application papers should be sent to the last known address of the nonsigning inventor, or, if the nonsigning inventor is represented by counsel, to the address of the nonsigning inventor's attorney." The MPEP also requires "a statement of facts by the person who presented the inventor with the application papers and/or to whom the refusal was made." Here, applicants have submitted a declaration of Caroline Marshall setting forth the attempts made to obtain the inventors' signatures. In her declaration, Ms. Marshall states that she used the Royal Mail recorded delivery service to send the nonsigning inventors a declaration, a request for signature, and a copy of the complete application papers. However, the attached cover letters identify as enclosures only the declaration and a return envelope; these letters do not reference an enclosed copy of the complete application papers. Clarification of this conflict in the submission must be provided before it can be concluded that copies of the complete application papers were included in these mailings, as required.

In addition, while applicant has provided a statement, and supporting tracking data, confirming the receipt of the mailing by nonsigning inventor Faycal BAHRI, no such confirmation has been provided with respect to nonsigning inventor Mohamed MENACER. Thus, even if applicants adequately confirm that these mailings included the required copy of the complete application papers, further evidence is required to demonstrate that the mailing has been properly provided to nonsigning inventor Mohamed MENACER (it is noted that, generally,

the failure of an inventor to respond to a single mailing, receipt of which has not been confirmed, is not considered a constructive refusal to sign the application).

Based on the above, the present record is not sufficient to demonstrate that the nonsigning inventors have refused to execute the application. Accordingly, item (4) of a grantable petition has not been satisfied.

## CONCLUSION

Applicants' petition under 37 CFR 1.47(a) is **DISMISSED** without prejudice.

If reconsideration on the merits of the petition is desired, a proper response must be filed within **TWO (2) MONTHS** of the mail date of the present decision. Any request for reconsideration should include a cover letter entitled "Renewed Petition Under 37 CFR 1.47(a)" and must include the materials required to satisfy item (4) of a grantable petition, as discussed above and in the MPEP. No additional petition fee is required.

Failure to file a proper response will result in abandonment of the application. Extensions of time are available under 37 CFR 1.136(a)

Please direct further correspondence with respect to this matter to Mail Stop PCT, Commissioner for Patents, Office of PCT Legal Administration, P.O. Box 1450, Alexandria, Virginia 22313-1450, with the contents of the letter marked to the attention of the Office of PCT Legal Administration.

Richard M. Ross
Attorney Advisor
Office of PCT Legal Administration
Telephone: (571) 272-3296
Facsimile: (571) 273-0459

02 OCT 2006

UNITED STATES PATENT AND TRADEMARK OFFICE

Commissioner for Patents
United States Patent and Trademark Office
P.O. Box 1450
Alexandria, VA 22313-1450
www.uspto.gov

CAHILL, VON HELLENS & GLAZER
155 Park One
2141 E. Highland Avenue
Phoenix, AZ 85016

| | |
|---|---|
| In re Application of:<br>AROUSSI, Abdelwahab, et al.<br>U.S. Application No.: 10/527,444<br>PCT No.: PCT/GB03/03919<br>International Filing Date: 09 September 2003<br>Priority Date: 09 September 2002<br>Attorney's Docket No.: 6817-A-1<br>For: FLOW HOMOGENISER | DECISION ON PETITION TO WITHDRAW HOLDING OF ABANDONMENT AND RENEWED PETITION UNDER 37 CFR 1.47(a) |

This decision is issued in response to applicants' "Petition To Withdraw Holding Of Abandonment" filed 27 September 2006 and "Renewed Petition Under 37 CFR 1.47(a)" filed 11 July 2006. No petition fees are required.

## BACKGROUND

The procedural background for this application was discussed in the decision mailed herein on 11 April 2006. That decision dismissed applicants' original petition under 37 CFR 1.47(a) for failure to satisfy all requirements of a grantable petition. Specifically, applicants had failed to provide an adequate showing that the non-signing inventors refuse to execute the application or cannot be reached after diligent effort. The decision provided applicants with a two-month response deadline, with extensions of time available under 37 CFR 1.136(a).

On 11 July 2006, applicants filed the Renewed Petition Under 37 CFR 1.47(a) considered herein, accompanied by a petition requesting a one-month extension of time (the extension petition authorized a charge to Deposit Account No. 03-0088 for the required extension fee).

On 24 August 2006, the DO/EO/US mailed a "Notice Of Abandonment" indicating that the application was abandoned for failure to file a timely response to the decision mailed on 11 April 2006.

On 27 September 2006, applicants filed the Petition To Withdraw Holding Of Abandonment considered herein, accompanied by a copy of the materials filed on 11 July 2006 and the electronic "Acknowledgement Receipt" for the 11 July 2006 filing. The petition asserts that, based on applicants timely response to the previous decision, the holding of abandonment was improper.

## DISCUSSION

### 1. Petition To Withdraw Holding Of Abandonment:

As discussed above, a review of the application file confirms applicants 11 July 2006 filing of a renewed petition in response to the 11 April 2006 decision. This renewed petition included a petition for the required one-month extension of time. Based on the one-month extension, the renewed petition filed 11 July 2006 is considered a timely response to the decision mailed on 11 April 2006.

The Notification Of Abandonment mailed 24 August 2006, based as it was on applicants' purported failure to file a timely response to the 11 April 2006 decision, is therefore appropriately vacated.

### 2. Renewed Petition Under 37 CFR 1.47(a):

The renewed petition includes materials confirming that a request for signature, accompanied by a copy of the complete application papers, was delivered to the two non-signing inventors and that the inventors did not return the signed declaration, as requested. These materials, in combination with the original petition materials, provide the required showing that the non-signing inventors have refused to sign the application papers.

## CONCLUSION

The Petition To Withdraw Holding Of Abandonment filed 27 September 2006 is **GRANTED**.

The Notice Of Abandonment mailed 24 August 2006 is hereby **VACATED**.

The Renewed Petition Under 37 CFR 1.47(a) filed 11 July 2006 is **GRANTED**. The application is accepted without the signature of non-signing inventors Faycal BAHRI and Mohamed MENACER.

A notice of the acceptance of the application will be published in the Official Gazette, and a letter informing the non-signing inventors of the application will be forwarded to the non-signing inventors at their last-known addresses, as set forth in the petition.

The application is being forwarded to the National Stage Processing Branch of the Office of PCT Operations for further processing. The date under 35 U.S.C. 371(c)(1), (c)(2), and (c)(4) is 28 October 2005.

Richard M. Ross
Attorney Advisor
Office of PCT Legal Administration
Telephone: (571) 272-3296
Facsimile: (571) 273-0459

03 OCT 2005

UNITED STATES PATENT AND TRADEMARK OFFICE

Commissioner for Patents
United States Patent and Trademark Office
P.O. Box 1450
Alexandria, VA 22313-1450
www.uspto.gov

Peter C. Stomma
Boyle Fredrickson Newholm Stein & Gratz, S.C.
250 E Wisconsin Avenue
Suite 1030
Milwaukee WI 53202

| | | |
|---|---|---|
| In re Application of | : | |
| FAHNLE, Oliver | : | |
| Application No.: 10/527,468 | : | DECISION |
| PCT No.: PCT/EP02/03120 | : | |
| Int. Filing Date: 20 March 2002 | : | ON PETITION UNDER |
| Priority Date: 20 March 2001 | : | |
| Docket No.: 1248.001 | : | 37 CFR 1.137(b) |
| For: DEVICE FOR ... OR WORKPIECES | : | |

Applicants' "Petition Under 37 C.F.R. §1.137(b)," filed in the above-captioned application on 10 March 2005 is **GRANTED**.

Applicant indicates that the entire delay in filing the required reply from the due date for the required reply until the filing of a grantable petition under 37 CFR 1.137(b) was unintentional, as required by 37 CFR 1.137(b)(3). The appropriate national fee and petition fee have been submitted. A terminal disclaimer is not required as the application was filed on or after 08 June 1995. Accordingly, all requirements under 37 CFR 1.137(b) have been satisfied.

Applicant has supplied a declaration of the inventor. It contains a non-dated, non-initialed alteration to the citizenship of the inventor. A new oath or declaration is required. 37 CFR 1.52(c)(1). The surcharge for filing the search fee, examination fee or declaration after thirty months from the priority date will be charged to deposit account no. 50-1170, as authorized. The processing fee for submission of the translation after thirty months will also be charged to deposit account no. 50-1170.

It is noted that though applicant mentions submission of an English language translation and an English translation is listed on a copy of the postcard receipt, such a translation is not present in the application.

This application is being forwarded to the National Stage Processing Branch of the Office of PCT Operations for continued processing in accordance with this decision, including the mailing of a Notification of Missing Requirements (Form PCT/DO/EO/905) is required.

Erin P. Thomson

Erin P. Thomson
Attorney Advisor
PCT Legal Administration

Telephone: 571-272-3292
Facsimile: 571-273-0459

UNITED STATES PATENT AND TRADEMARK OFFICE

UNITED STATES DEPARTMENT OF COMMERCE
United States Patent and Trademark Office
Address: COMMISSIONER FOR PATENTS
P.O. Box 1450
Alexandria, Virginia 22313-1450
www.uspto.gov

JACOBSON HOLMAN PLLC
400 SEVENTH STREET N.W.
SUITE 600
WASHINGTON, DC 20004

Mail Date: 04/21/2010

| | | |
|---|---|---|
| **Applicant** | : Nobuyuki Oka | : DECISION ON REQUEST FOR |
| **Patent Number** | : 7654538 | : RECALCULATION of PATENT |
| **Issue Date** | : 02/02/2010 | : TERM ADJUSTMENT IN VIEW |
| **Appliction No** | : 10/527,480 | : OF WYETH AND NOTICE OF INTENT TO |
| **Filed** | : 03/11/2005 | : ISSUE CERTIFICATE OF CORRECTION |
| | | : |

The Request for Recalculation is **GRANTED** to the extent indicated.

The patent term adjustment has been determined to be **0** days. The USPTO will *sua sponte* issue a certificate of correction reflecting the amount of PTA days determined by the recalculation.

Prior to the issuance of the certificate of correction, the USPTO will afford patentee an opportunity to be heard and request reconsideration. Accordingly, patentee has **one month or thirty (30) days**, whichever is longer, to file a request for reconsideration of this patent term adjustment calculation. See 35 U.S.C. 154(b)(3)(B)(ii) and 37 CFR 1.322(a)(4). No extensions of time will be granted under 37 CFR 1.136.

Patentee should use document code PET.OP if electronically filing a request for reconsideration of this patent term adjustment calculation. The patentee must also include the information required by 37 CFR 1.705(b)(2) and the fee required by 37 CFR 1.18(e). If patentee does not file a timely request for reconsideration of this patent term adjustment calculation including the information required by 37 CFR 1.705(b)(2) and the fee required by 37 CFR 1.18(e), the USPTO will issue a certificate of correction reflecting the PTA determination noted above.

Patentee should be aware that in order to preserve the right to review in the United States District Court for the District of Columbia of the USPTO patent term adjustment determination, patentee must ensure that he or she also take the steps required under 35 U.S.C. 154(b)(4)(A) in a timely manner. Nothing in the request for recalculation should be construed as providing an alternative time frame for commencing a civil action under 35 U.S.C. 154(b)(4)(A).

Any questions concerning this decision should be directed to the Office of Patent Legal Administration at 571-272-7702.

20 JUN 2006

#6

UNITED STATES PATENT AND TRADEMARK OFFICE

COMMISSIONER FOR PATENTS
UNITED STATES PATENT AND TRADEMARK OFFICE
P.O. BOX 1450
ALEXANDRIA, VA 22313-1450
www.uspto.gov

CARRIER BLACKMAN AND ASSOCIATES
24101 NOVI ROAD
SUITE 100
NOVI, MI 48375

| | | |
|---|---|---|
| In re Application of ICHIJO | : | |
| U.S. Application No.: 10/527,488 | : | |
| PCT Application No.: PCT/JP02/09393 | : | |
| Int. Filing Date: 13 September 2002 | : | DECISION |
| Priority Date Claimed: (none) | : | |
| Attorney Docket No.: KNI-200-A | : | |
| For: LIGHT SCATTERING TYPE PARTICLE | : | |
| DETECTOR | : | |

This is in response to applicant's "Request for Reconsideration of Abandonment Determination" filed 05 June 2006, which is being treated as a petition under 37 CFR 1.181. No petition fee is due.

## BACKGROUND

On 13 September 2002, applicant filed international application PCT/JP02/09393. A copy of the international application was communicated to the USPTO from the International Bureau on 25 March 2004. The thirty-month period for paying the basic national fee in the United States expired on 13 March 2005.

On 11 March 2005, applicant filed national stage papers in the United States Designated/Elected Office (DO/EO/US). The submission was accompanied by, *inter alia*, the basic national fee required by 35 U.S.C. 371(c)(1).

On 09 August 2005, the DO/EO/US mailed a Notification of Missing Requirements Under 35 U.S.C. 371 (Form PCT/DO/EO/905), which indicated that an oath or declaration in compliance with 37 CFR 1.497 must be filed.

On 02 September 2005, applicant purportedly filed an executed declaration.

On 12 April 2006, the DO/EO/US mailed a Notification of Abandonment (Form PCT/DO/EO/909), which indicated that the application is abandoned for failure to timely respond to the Notification of Missing Requirements.

On 05 June 2006, applicant filed the present petition under 37 CFR 1.181.

## DISCUSSION

The evidence of record is sufficient to establish that the declaration was originally filed on 02 September 2005. Specifically, the copy of the return postcard, which includes the declaration in its itemized contents and which bears a USPTO date stamp of 02 September 2005, serves as *prima facie* evidence that the declaration was received by the USPTO on 02 September 2005.

## CONCLUSION

For the reasons above, the petition under 37 CFR 1.181 is GRANTED.

The Notification of Abandonment (Form PCT/DO/EO/909) mailed 12 April 2006 is hereby VACATED.

The application has an International Filing Date under 35 U.S.C. 363 of 13 September 2002, and a date under 35 U.S.C. 371(c)(1), (c)(2), and (c)(4) of 02 September 2005.

This application is being forwarded to the United States Designated/Elected Office (DO/EO/US) for further processing in accordance with this decision.

Bryan Tung
PCT Legal Examiner
PCT Legal Office

Telephone: 571-272-3303
Facsimile: 571-273-0459

UNITED STATES PATENT AND TRADEMARK OFFICE

Commissioner for Patents
United States Patent and Trademark Office
P.O. Box 1450
Alexandria, VA 22313-1450
www.uspto.gov

26 JUL 2006

Kenyon & Kenyon, LLP
One Broadway
New York, New York 10004

| | | |
|---|---|---|
| In re Application of | : | |
| ERFLE, et al. | : | |
| Application No.: 10/527,492 | : | |
| PCT No.: PCT/DE03/01035 | : | DECISION ON REQUEST |
| Int. Filing Date: 28 March 2003 | : | |
| Priority Date: 12 September 2002 | : | |
| Attorney Docket No.: 10191/4060 | : | |
| For: DEVICE AND METHOD FOR APPLYING A FLUID MEDIUM TO A SUBSTRATE | | |

This decision is in response to applicants' "Reply to Notification of Defective Response" filed 23 February 2006 notifying the Office that the correct spelling of the first inventor's name is STEFFAN Erfle as indicated on the declaration rather than Stefan Erfle as indicated on the published international application. Applicants' request has been treated under 37 CFR 1.181. No petition fee is due.

Petitioner states that the discrepancy between the name of the first inventor indicated in the international application during the international phase and the name of the first inventor as it appears in the declaration is the result of a typographical error. As indicated in Section 201.03 of the Manual of Patent Examining Procedure, where a typographical or transliteration error in the spelling of an inventor's name is discovered, a petition under 37 CFR 1.48(a) is not required. Accordingly, applicants' explanation of the difference in the spelling of the first inventor's name is accepted and noted for the record.

For the reasons above, the request is **GRANTED**.

This application is being forwarded to United States Designated/Elected Office for further processing and for review of the national stage papers submitted 23 February 2006.

Anthony Smith

Anthony Smith
Attorney-Advisor
Office of PCT Legal Administration
Tel: (571) 272-3298
Fax: (571) 273-0459

SPE RESPONSE FOR CERTIFICATE OF CORRECTION

DATE : 8-6-09

Paper No.: _____

TO SPE OF : ART UNIT 1644

SUBJECT : Request for Certificate of Correction for Appl. No.: 10/527446 Patent No.: 7514084

Please respond to this request for a certificate of correction within 7 days.

**FOR IFW FILES:** Should drawings be approved

Please review the requested changes/corrections as shown in the **COCIN** document(s) in the IFW application image. No new matter should be introduced, nor should the scope or meaning of the claims be changed.

Please complete the response (see below) and forward the completed response to scanning using document code **COCX**.

**FOR PAPER FILES:**

Please review the requested changes/corrections as shown in the attached certificate of correction. Please complete this form (see below) and forward it with the file to:

**Certificates of Correction Branch (C of C)**
**Randolph Square 9C62-D**
**Palm Location 7580**

Ennis Young
**Certificates of Correction Branch**
**703-756-1542**

**Thank You For Your Assistance**

**The request for issuing the above-identified correction(s) is hereby:**
Note your decision on the appropriate box.

- ☒ **Approved** — All changes apply.
- ☐ **Approved in Part** — Specify below which changes **do not** apply.
- ☐ **Denied** — State the reasons for denial below.

**Comments:** _____

RAM R. SHUKLA, PH.D.
SUPERVISORY PATENT EXAMINER
SPE

1644
Art Unit

UNITED STATES PATENT AND TRADEMARK OFFICE

Commissioner for Patents
United States Patent and Trademark Office
P.O. Box 1450
Alexandria, VA 22313-1450
www.uspto.gov

**Morrison & Foerster LLP**
**755 Page Mill Road**
**Palo Alto, CA 94304-1018**

COPY MAILED

JAN 16 2008

OFFICE OF PETITIONS

| | | |
|---|---|---|
| In re Application of | : | |
| Alexander Schluttig et al. | : | |
| Application No. 10/527,512 | : | DECISION ON PETITION |
| Filed: March 10, 2005 | : | TO WITHDRAW |
| Attorney Docket No. S286 1030US | : | FROM RECORD |
| | : | |

This is a decision on the Request to Withdraw as attorney or agent of record under 37 C.F.R. § 1.36(b), filed August 17, 2007.

The request is **NOT APPROVED** as moot.

A review of the file record indicates that the power of attorney to Morrison & Foerster LLP has been revoked by the assignee of the patent application on September 4, 2007. Accordingly, the request to withdraw under 37 C.F.R. § 1.36(b) is moot.

All future communications from the Office will continue to be directed to the below-listed address until otherwise notified by applicant.

Telephone inquires concerning this decision should be directed to Terri Williams at 571-272-2991.

T. Williams

Terri Williams
Petitions Examiner
Office of Petitions

cc: **Womble Caryle Sandridge & Rice, PLLC**
**Attn: Patent Docketing 32nd Floor**
**P.O. Box 7037**
**Atlanta, GA 30357-0037**

UNITED STATES PATENT AND TRADEMARK OFFICE

UNITED STATES DEPARTMENT OF COMMERCE
United States Patent and Trademark Office
Address: COMMISSIONER FOR PATENTS
P.O. Box 1450
Alexandria, Virginia 22313-1450
www.uspto.gov

WEGMAN, HESSLER & VANDERBURG
6055 ROCKSIDE WOODS BOULEVARD
SUITE 200
CLEVELAND, OH 44131

Mail Date: 05/11/2010

| | | |
|---|---|---|
| **Applicant** | : David B Smathers | : DECISION ON REQUEST FOR |
| **Patent Number** | : 7638200 | : RECALCULATION of PATENT |
| **Issue Date** | : 12/29/2009 | : TERM ADJUSTMENT IN VIEW |
| **Application No** | : 10/527,513 | : OF WYETH AND NOTICE OF INTENT TO |
| **Filed** | : 10/26/2005 | : ISSUE CERTIFICATE OF CORRECTION |
| | | : |

The Request for Recalculation is **GRANTED** to the extent indicated.

The patent term adjustment has been determined to be **866** days. The USPTO will *sua sponte* issue a certificate of correction reflecting the amount of PTA days determined by the recalculation.

Prior to the issuance of the certificate of correction, the USPTO will afford patentee an opportunity to be heard and request reconsideration. Accordingly, patentee has **one month or thirty (30) days**, whichever is longer, to file a request for reconsideration of this patent term adjustment calculation. See 35 U.S.C. 154(b)(3)(B)(ii) and 37 CFR 1.322(a)(4). No extensions of time will be granted under 37 CFR 1.136.

Patentee should use document code PET.OP if electronically filing a request for reconsideration of this patent term adjustment calculation. The patentee must also include the information required by 37 CFR 1.705(b)(2) and the fee required by 37 CFR 1.18(e). If patentee does not file a timely request for reconsideration of this patent term adjustment calculation including the information required by 37 CFR 1.705(b)(2) and the fee required by 37 CFR 1.18(e), the USPTO will issue a certificate of correction reflecting the PTA determination noted above.

Patentee should be aware that in order to preserve the right to review in the United States District Court for the District of Columbia of the USPTO patent term adjustment determination, patentee must ensure that he or she also take the steps required under 35 U.S.C. 154(b)(4)(A) in a timely manner. Nothing in the request for recalculation should be construed as providing an alternative time frame for commencing a civil action under 35 U.S.C. 154(b)(4)(A).

Any questions concerning this decision should be directed to the Office of Patent Legal Administration at 571-272-7702.

UNITED STATES PATENT AND TRADEMARK OFFICE

Commissioner for Patents
United States Patent and Trademark Office
P.O. Box 1450
Alexandria, VA 22313-1450
www.uspto.gov

21 AUG 2006

IP GROUP OF DLA PIPER RUDNICK GRAY CARY US LLP
1650 MARKET ST
SUITE 4900
PHILADELPHIA PA 19103

| | | |
|---|---|---|
| In re Application of: | : | |
| TANAKA, Hiroyuki, et al. | : | DECISION |
| Application No.: 10/527,514 | : | |
| PCT No.: PCT/JP03/11541 | : | |
| Int. Filing Date: 10 September 2003 | : | |
| Priority Date: 10 September 2002 | : | |
| Attorney Docket No.: TIP-05-1037 | : | |
| For: BIAXIALLY ORIENTED POLYESTER FILM | : | |

This decision is issued in response to applicants' "Letter" filed 08 December 2005, treated herein as a petition under 37 CFR 1.181 to confirm the 04 April 2005 filing of the declaration herein, and the "Request For Corrected Filing Receipt And Notice Of Acceptance" filed 21 February 2006. No petition fee is required.

## BACKGROUND

On 10 September 2003, applicants filed international application PCT/JP03/11541. The international application claimed a priority date of 10 September 2002, and it designated the United States. On 25 March 2004, the International Bureau ("IB") communicated a copy of the international application to the United States Patent And Trademark Office ("USPTO") by. The deadline for submission of the basic national fee was thirty months from the priority date, i.e., 10 March 2005.

On 10 March 2005, applicant filed a transmittal letter for entry into the national stage accompanied by, among other materials, payment of the basic national fee.

On 02 December 2005, the United States Designated/Elected Office (DO/EO/US) mailed a "Notification Of Missing Requirements" (Form PCT/DO/EO/905) requiring submission of an oath or declaration in compliance with 37 CFR 1.497.

On 08 December 2005, applicants filed a "Letter," with accompanying materials, in response to the Notification Of Missing Requirements. The submission included a copy of an executed declaration in compliance with 37 CFR 1.497 and a statement that the declaration had been previously filed on 04 April 2005. The submission also included a copy of a return postcard itemizing the declaration and bearing a USPTO receipt stamp dated 04 April 2005.

On 02 February 2006, the DO/EO/US mailed a "Notification Of Acceptance" (Form PCT/DO/EO/903) identifying 08 December 2005 as the "Date Of Receipt Of 35 U.S.C.

371(c)(1), (c)(2), and (c)(4) Requirements" and the "Date Of Completion Of All 35 U.S.C. 371(c) Requirements." The Notification Of Acceptance also identified the international filing date as 09 October 2003.

Also on 02 February 2006, a filing receipt was issued which identified 08 December 2005 as the 35 U.S.C. 371(c) date and 09 October 2003 as the international filing date.

On 21 February 2006, applicants filed the "Request For Corrected Filing Receipt And Notice Of Acceptance" considered herein. In this submission, applicants request correction of the 35 U.S.C. 371(c) date to 04 April 2005 and correction of the international filing date to 10 September 2003. The submission included, among other materials, a Supplemental Application Data Sheet (ADS) in which the international filing date for PCT/JP03/2003 had been corrected to 10 September 2003 (the original ADS filed 10 March 2005 had incorrectly identified the international filing date as 09 October 2003).

## DISCUSSION

Based on applicants statements in the correspondence filed 08 December 2005 and the accompanying return postcard itemizing the declaration and bearing a USPTO receipt stamp dated 04 April 2005, it is concluded that the declaration accompanying the 08 December 2005 was originally filed in the USPTO on 04 April 2005. As this declaration completed the requirements of 35 U.S.C. 371(c) for the present application, the proper date under 35 U.S.C. 371(c)(1), (c)(2), and (c)(4) for this application is 04 April 2005.

In addition, a review of the application file confirms that the international filing date for PCT/JP03/11541 is 10 September 2003, as indicated in the "Request For Corrected Filing Receipt And Notice Of Acceptance" and in the Supplemental ADS submitted therewith.

Based on the above, the Notification Of Acceptance and filing receipt mailed 02 February 2006, which identified the 35 U.S.C. 371(c) date as 08 December 2005 and the international filing date as 09 October 2003, are appropriately vacated.

## CONCLUSION

Applicants' petition under 37 CFR 1.181 is **GRANTED**.

The correct date under 35 U.S.C. 371(c)(1), (c)(2), and (c)(4) for the present application is 04 April 2005, the date the executed declaration was originally filed in the USPTO.

The correct international filing date for PCT/JP03/11541 is 10 September 2003.

The Notification Of Acceptance and filing receipt mailed 02 February 2006, which identified the 35 U.S.C. 371(c) date as 08 December 2005 and the international filing date as 09 October 2003, are hereby **VACATED**.

This application is being referred to the National Stage Processing Branch of the Office Of PCT Operations for further processing in accordance with this decision, including the issuance of a corrected Notification Of Acceptance and filing receipt that properly identify the date under 35 U.S.C. 371(c)(1), (c)(2), and (c)(4) as 04 April 2005 and the international filing date as 10 September 2003.

Richard M. Ross
Attorney Advisor
Office of PCT Legal Administration
Telephone: (571) 272-3296
Facsimile: (571) 273-0459

UNITED STATES PATENT AND TRADEMARK OFFICE

Commissioner for Patents
United States Patent and Trademark Office
P.O. Box 1450
Alexandria, VA 22313-1450
www.uspto.gov

IP GROUP OF DLA PIPER US LLP
ONE LIBERTY PLACE
1650 MARKET ST, SUITE 4900
PHILADELPHIA PA 19103

COPY MAILED
AUG 0 6 2007
OFFICE OF PETITIONS

| | | |
|---|---|---|
| In re Application of | : | |
| Tanaka, et al. | : | |
| Application No. 10/527,514 | : | ON PETITION |
| Filed: March 10, 2005 | : | |
| Attorney Docket No. TIP-05-1037 | : | |

This is a decision on the petition, filed March 16, 2007 (certificate of mailing date March 12, 2007) entitled, "PETITION TO RESENT NOTICE OF ALLOWANCE," which will be treated under 37 CFR 1.181 as a petition to withdraw the holding of abandonment of the above-identified application.

The petition under 37 CFR 1.181 to withdraw the holding of abandonment is **GRANTED**.

The above-identified application became abandoned for failure to timely reply to Notice of Allowance and Fee(s) Due, mailed November 14, 2006, which set a non-extendable period for reply of three (3) months. Having received no reply, the Office considered the application abandoned on February 15, 2007. A Notice of Abandonment was mailed on March 19, 2007.

Petitioners allege that the November 14, 2006 Notice was not received at the proper correspondence address of record and therefore, the application is not really abandoned. The undersigned finds this assertion completely convincing because the Office action in question was mailed to an incorrect address. There is no record of any request being made to change the correspondence address in the application from the address listed in the executed declaration – the address associated with customer number 35811. The November 14, 2006 Notice and the March 19, 2007 Notice of Abandonment were mailed to an address other than the correspondence address of record.

The petition under 37 CFR 1.181 is granted. The March 19, 2007 Notice of Abandonment is vacated and the holding of abandonment is withdrawn. No petition fee has been or will be charged in connection with this matter.

The correspondence address has been corrected to the address associated with customer no. 035811.

After the mailing of this decision, the application will be returned to Technology Center 1773 for the re-mailing of the November 14, 2006 Notice of Allowance and Fee(s) Due and the Notice of Allowability with a new period for response.

Telephone inquiries may be directed to the undersigned at (571) 272-3230.

Shirene Willis Brantley
Senior Petitions Attorney
Office of Petitions

UNITED STATES PATENT AND TRADEMARK OFFICE

Commissioner for Patents
United States Patent and Trademark Office
P.O. Box 1450
Alexandria, VA 22313-1450
www.uspto.gov

NXP, B.V.
NXP INTELLECTUAL PROPERTY DEPARTMENT
M/S41-SJ
1109 MCKAY DRIVE
SAN JOSE, CA 95131

**COPY MAILED**

FEB 0 7 2008

**OFFICE OF PETITIONS**

| | | |
|---|---|---|
| In re Application of | : | |
| Francesco Pessolano et al | : | |
| Application No. 10/527,551 | : | ON PETITION |
| Filed: March 11, 2005 | : | |
| Attorney Docket No. NL02 0834 US | : | |

This is a decision on the petition under 37 CFR 1.137(b), filed February 22, 2007, to revive the above-identified application.

The petition is **DISMISSED.**

Any request for reconsideration of this decision must be submitted within TWO (2) MONTHS from the mail date of this decision. Extensions of time under 37 CFR 1.136(a) are permitted. The reconsideration request should include a cover letter entitled "**Renewed Petition under 37 CFR 1.137(b)**." This is **not** final agency action within the meaning of 5 U.S.C. § 704.

A grantable petition under 37 CFR 1.137(b) must be accompanied by: (1) the required reply, unless previously filed; (2) the petition fee as set forth in 37 CFR 1.17(m); (3) a statement that the entire delay in filing the required reply from the due date for the reply until the filing of a grantable petition pursuant to 37 CFR 1.137(b) was unintentional; and (4) any terminal disclaimer (and fee as set forth in 37 CFR 1.20(d)) required by 37 CFR 1.137(c). Where there is a question as to whether either the abandonment or the delay in filing a petition under 37 CFR 1.137 was unintentional, the Commissioner may require additional information. See MPEP 711.03(c)(III)(C) and (D). The instant petition lack(s) item(s) (1).

The application became abandoned for failure to timely file a reply within the meaning of 37 CFR 1.113 to the final Office action of April 20, 2006. The proposed reply required for consideration of a petition to revive must be a Notice of Appeal (and appeal fee required by 37 CFR 41.20(b)(2)), an amendment that *prima facie* places the application in condition for allowance, a Request for Continued Examination (RCE) and submission (37 CFR 1.114), or the filing of a continuing application under 37 CFR 1.53(b). *See* MPEP 711.03(c)(III)(A)(2). Since the amendment submitted does not *prima facie* place the application in condition for allowance, the reply required must be a Notice of Appeal (and appeal fee), RCE, or the filing of a continuing application under 37 CFR 1.53(b).

Further correspondence with respect to this matter should be addressed as follows:

By mail: Mail Stop PETITION
Commissioner for Patents
Post Office Box 1450
Alexandria, VA 22313-1450

By hand: Customer Service Window
Randolph Building
401 Dulany Street
Alexandria, VA 22314

By facsimile: (571) 273-8300
ATTN: Office of Petitions

Telephone inquiries concerning this decision should be directed to the undersigned at (571) 272-3210.

Irvin Dingle
Petitions Examiner
Office of Petitions

Attachment: Advisory Action

| Advisory Action Before the Filing of an Appeal Brief | Application No. 10/527,551 | Applicant(s) PESSOLANO ET AL. | |
|---|---|---|---|
| | Examiner LINH V. NGUYEN | Art Unit 2819 | |

***--The MAILING DATE of this communication appears on the cover sheet with the correspondence address --***

THE REPLY FILED 22 February 2007 FAILS TO PLACE THIS APPLICATION IN CONDITION FOR ALLOWANCE.

1. ☒ The reply was filed after a final rejection, but prior to or on the same day as filing a Notice of Appeal. To avoid abandonment of this application, applicant must timely file one of the following replies: (1) an amendment, affidavit, or other evidence, which places the application in condition for allowance; (2) a Notice of Appeal (with appeal fee) in compliance with 37 CFR 41.31; or (3) a Request for Continued Examination (RCE) in compliance with 37 CFR 1.114. The reply must be filed within one of the following time periods:
   a) ☒ The period for reply expires *3* months from the mailing date of the final rejection.
   b) ☐ The period for reply expires on: (1) the mailing date of this Advisory Action, or (2) the date set forth in the final rejection, whichever is later. In no event, however, will the statutory period for reply expire later than SIX MONTHS from the mailing date of the final rejection.
   Examiner Note: If box 1 is checked, check either box (a) or (b). ONLY CHECK BOX (b) WHEN THE FIRST REPLY WAS FILED WITHIN TWO MONTHS OF THE FINAL REJECTION. See MPEP 706.07(f).

Extensions of time may be obtained under 37 CFR 1.136(a). The date on which the petition under 37 CFR 1.136(a) and the appropriate extension fee have been filed is the date for purposes of determining the period of extension and the corresponding amount of the fee. The appropriate extension fee under 37 CFR 1.17(a) is calculated from: (1) the expiration date of the shortened statutory period for reply originally set in the final Office action; or (2) as set forth in (b) above, if checked. Any reply received by the Office later than three months after the mailing date of the final rejection, even if timely filed, may reduce any earned patent term adjustment. See 37 CFR 1.704(b).

NOTICE OF APPEAL

2. ☐ The Notice of Appeal was filed on _____. A brief in compliance with 37 CFR 41.37 must be filed within two months of the date of filing the Notice of Appeal (37 CFR 41.37(a)), or any extension thereof (37 CFR 41.37(e)), to avoid dismissal of the appeal. Since a Notice of Appeal has been filed, any reply must be filed within the time period set forth in 37 CFR 41.37(a).

AMENDMENTS

3. ☒ The proposed amendment(s) filed after a final rejection, but prior to the date of filing a brief, will not be entered because
   (a) ☒ They raise new issues that would require further consideration and/or search (see NOTE below);
   (b) ☐ They raise the issue of new matter (see NOTE below);
   (c) ☐ They are not deemed to place the application in better form for appeal by materially reducing or simplifying the issues for appeal; and/or
   (d) ☐ They present additional claims without canceling a corresponding number of finally rejected claims.
   NOTE: *See Continuation Sheet*. (See 37 CFR 1.116 and 41.33(a)).
4. ☐ The amendments are not in compliance with 37 CFR 1.121. See attached Notice of Non-Compliant Amendment (PTOL-324).
5. ☐ Applicant's reply has overcome the following rejection(s): _____.
6. ☐ Newly proposed or amended claim(s) _____ would be allowable if submitted in a separate, timely filed amendment canceling the non-allowable claim(s).
7. ☒ For purposes of appeal, the proposed amendment(s): a) ☒ will not be entered, or b) ☐ will be entered and an explanation of how the new or amended claims would be rejected is provided below or appended.
   The status of the claim(s) is (or will be) as follows:
   Claim(s) allowed: _____.
   Claim(s) objected to: _____.
   Claim(s) rejected: *1-10*.
   Claim(s) withdrawn from consideration: _____.

AFFIDAVIT OR OTHER EVIDENCE

8. ☐ The affidavit or other evidence filed after a final action, but before or on the date of filing a Notice of Appeal will not be entered because applicant failed to provide a showing of good and sufficient reasons why the affidavit or other evidence is necessary and was not earlier presented. See 37 CFR 1.116(e).
9. ☐ The affidavit or other evidence filed after the date of filing a Notice of Appeal, but prior to the date of filing a brief, will not be entered because the affidavit or other evidence failed to overcome all rejections under appeal and/or appellant fails to provide a showing a good and sufficient reasons why it is necessary and was not earlier presented. See 37 CFR 41.33(d)(1).
10. ☐ The affidavit or other evidence is entered. An explanation of the status of the claims after entry is below or attached.

REQUEST FOR RECONSIDERATION/OTHER

11. ☐ The request for reconsideration has been considered but does NOT place the application in condition for allowance because: _____.
12. ☐ Note the attached Information *Disclosure Statement*(s). (PTO/SB/08) Paper No(s). _____
13. ☐ Other: _____.

LINH NGUYEN
PRIMARY EXAMINER
1/31/08

/Linh V Nguyen/
Primary Examiner, Art Unit 2819

Continuation of 3. NOTE: Amendment to lcaim 1 and 6 "...an information biet to be encoded; encoding the information bit as as furnction of relative delay.." raise new issue of definition and definiteness over the prior art of record .

UNITED STATES PATENT AND TRADEMARK OFFICE

COMMISSIONER FOR PATENTS
UNITED STATES PATENT AND TRADEMARK OFFICE
P.O. BOX 1450
ALEXANDRIA, VA 22313-1450
www.uspto.gov

COPY MAILED

JUL 21 2008

NXP, B.V.
NXP INTELLECTUAL PROPERTY DEPARTMENT
M/S41-SJ
1109 MCKAY DRIVE
SAN JOSE, CA 95131

| | | |
|---|---|---|
| In re Application of | : | |
| Francesco Pessolano et al | : | |
| Application No. 10/527,551 | : | ON PETITION |
| Filed: March 11, 2005 | : | |
| Attorney Docket No. NL02 0834 US | : | |

This is a decision on the renewed petition under 37 CFR 1.137(b), filed April 7, 2008, to revive the above-identified application.

The petition is **DISMISSED.**

Any request for reconsideration of this decision must be submitted within TWO (2) MONTHS from the mail date of this decision. Extensions of time under 37 CFR 1.136(a) are permitted. The reconsideration request should include a cover letter entitled "**Renewed Petition under 37 CFR 1.137(b)**." This is **not** final agency action within the meaning of 5 U.S.C. § 704.

A grantable petition under 37 CFR 1.137(b) must be accompanied by: (1) the required reply, unless previously filed; (2) the petition fee as set forth in 37 CFR 1.17(m); (3) a statement that the entire delay in filing the required reply from the due date for the reply until the filing of a grantable petition pursuant to 37 CFR 1.137(b) was unintentional; and (4) any terminal disclaimer (and fee as set forth in 37 CFR 1.20(d)) required by 37 CFR 1.137(c). Where there is a question as to whether either the abandonment or the delay in filing a petition under 37 CFR 1.137 was unintentional, the Commissioner may require additional information. See MPEP 711.03(c)(III)(C) and (D). The instant petition lack(s) item(s) (2).

The authorization to charge the petitioner's deposit account received with the petition on February 22, 2007 is not accepted. The authorization to charge is sign by Michael J. Ure. Mr. Ure's name is not listed on the deposit account. This petition can not be revived until the $1540 petition fee is received.

Further correspondence with respect to this matter should be addressed as follows:

| | |
|---|---|
| By mail: | Mail Stop PETITION<br>Commissioner for Patents<br>Post Office Box 1450<br>Alexandria, VA 22313-1450 |
| By hand: | Customer Service Window<br>Randolph Building<br>401 Dulany Street<br>Alexandria, VA 22314 |
| By facsimile: | (571) 273-8300<br>ATTN: Office of Petitions |

Telephone inquiries concerning this decision should be directed to the undersigned at (571) 272-3210.

Irvin Dingle
Petitions Examiner
Office of Petitions

UNITED STATES PATENT AND TRADEMARK OFFICE

Commissioner for Patents
United States Patent and Trademark Office
P.O. Box 1450
Alexandria, VA 22313-1450
www.uspto.gov

NXP, B.V.
NXP INTELLECTUAL PROPERTY DEPARTMENT
M/S41-SJ
1109 MCKAY DRIVE
SAN JOSE, CA 95131

**COPY MAILED**

NOV 1 0 2008

**OFFICE OF PETITIONS**

In re Application of :
Francesco Pessolano et al :
Application No. 10/527,551 :
Filed: March 11, 2005 :
Attorney Docket No. NL02 0834 US :

ON PETITION

This is a decision on the renewed petition under the unintentional provisions of 37 CFR 1.137(b), filed September 19, 2008, to revive the above-identified application.

The petition is **GRANTED**.

The petition satisfies the requirements of 37 CFR 1.137(b) in that petitioner has supplied (1) the reply in the form of a Request for Continued Examination (RCE) and fee of $810 and the submission required by 37 CFR 1.114; (2) the petition fee of $1540; and (3) a proper statement of unintentional delay.

Telephone inquiries concerning this decision should be directed to the undersigned at (571) 272-3210.

This application is being referred to Technology Center AU 2819 for processing of the RCE and for appropriate action by the Examiner in the normal course of business on the amendment submitted in accordance with 37 CFR 1.114.

Irvin Dingle
Petition Examiner
Office of Petitions

UNITED STATES PATENT AND TRADEMARK OFFICE

Commissioner for Patents
United States Patent and Trademark Office
P.O. Box 1450
Alexandria, VA 22313-1450
www.uspto.gov

SANDOZ INC
506 CARNEFIE CENTER
PRINCETON, NJ 08540

**COPY MAILED**

OCT 14 2008

**OFFICE OF PETITIONS**

In re Application of :
Hubert Kurnsteiner et al :
Application No. 10/527,552 :
Filed: March 11, 2005 :
Attorney Docket No. IB/G-32677A :

ON PETITION

This is a decision on the petition under 37 CFR 1.137(b), filed June 9, 2008, to revive the above-identified application.

The petition is **GRANTED**.

**The two-month period for filing an appeal brief in triplicate (accompanied by the fee required by 37 CFR 1.17(c)), runs from the date of this decision.**

The above-identified application became abandoned for failure to reply in a timely manner to the final Office action mailed November 30, 2007, which set a shortened statutory period for reply of three (3) months. No extensions of time under the provisions of 37 CFR 1.136(a) were obtained. Accordingly, the above-identified application became abandoned on March 1, 2008.

An extension of time under 37 CFR 1.136 must be filed prior to the expiration of the maximum extendable period for reply. See In re Application of S., 8 USPQ2d 1630, 1631 (Comm'r Pats. 1988). Accordingly, since the $1050 extension of time submitted with the petition on June 9, 2008 was subsequent to the maximum extendable period for reply, this fee is unnecessary and will be credit to petitioner's deposit account.

Telephone inquiries concerning this decision should be directed to Irvin Dingle at (571) 272-3210.

This matter is being forwarded to Technology Center AU 1652 for further processing.

Irvin Dingle
Petitions Examiner
Office of Petitions

UNITED STATES PATENT AND TRADEMARK OFFICE

UNITED STATES DEPARTMENT OF COMMERCE
United States Patent and Trademark Office
Address: COMMISSIONER FOR PATENTS
P.O. Box 1450
Alexandria, Virginia 22313-1450
www.uspto.gov

Robert D. Shedd, Patent Operations
THOMSON Licensing LLC
P.O. Box 5312
Princeton, NJ 08543-5312

Mail Date: 04/21/2010

| | | |
|---|---|---|
| **Applicant** | : Northon Rodrigues | : DECISION ON REQUEST FOR |
| **Patent Number** | : 7665097 | : RECALCULATION of PATENT |
| **Issue Date** | : 02/16/2010 | : TERM ADJUSTMENT IN VIEW |
| **Appliction No** | : 10/527,576 | : OF WYETH AND NOTICE OF INTENT TO |
| **Filed** | : 03/11/2005 | : ISSUE CERTIFICATE OF CORRECTION |
| | | : |

The Request for Recalculation is **GRANTED** to the extent indicated.

The patent term adjustment has been determined to be **115** days. The USPTO will *sua sponte* issue a certificate of correction reflecting the amount of PTA days determined by the recalculation.

Prior to the issuance of the certificate of correction, the USPTO will afford patentee an opportunity to be heard and request reconsideration. Accordingly, patentee has **one month or thirty (30) days**, whichever is longer, to file a request for reconsideration of this patent term adjustment calculation. See 35 U.S.C. 154(b)(3)(B)(ii) and 37 CFR 1.322(a)(4). No extensions of time will be granted under 37 CFR 1.136.

Patentee should use document code PET.OP if electronically filing a request for reconsideration of this patent term adjustment calculation. The patentee must also include the information required by 37 CFR 1.705(b)(2) and the fee required by 37 CFR 1.18(e). If patentee does not file a timely request for reconsideration of this patent term adjustment calculation including the information required by 37 CFR 1.705(b)(2) and the fee required by 37 CFR 1.18(e), the USPTO will issue a certificate of correction reflecting the PTA determination noted above.

Patentee should be aware that in order to preserve the right to review in the United States District Court for the District of Columbia of the USPTO patent term adjustment determination, patentee must ensure that he or she also take the steps required under 35 U.S.C. 154(b)(4)(A) in a timely manner. Nothing in the request for recalculation should be construed as providing an alternative time frame for commencing a civil action under 35 U.S.C. 154(b)(4)(A).

Any questions concerning this decision should be directed to the Office of Patent Legal Administration at 571-272-7702.

27 APR 2006

#6

UNITED STATES PATENT AND TRADEMARK OFFICE

Commissioner for Patents
United States Patent and Trademark Office
P.O. Box 1450
Alexandria, VA 22313-1450
www.uspto.gov

Lisa M. Hemmendinger
Banner & Witcoff
1001 G Street, NW
Washington, DC 20001

| | |
|---|---|
| In re Application of<br>BESCHORONER, et al.<br>Application No.: 10/527,587<br>PCT No.: PCT/US03/29251<br>Int. Filing Date: 17 September 2003<br>Priority Date: 19 September 2002<br>Atty. Docket No.: 00241.00003<br>For: GROWTH OF FOREIGN CELLS IN FETAL ANIMALS FACILITATED BY CONDITIONAL AND SELECTIVE DESTRUCTION OF HOST CELLS | DECISION ON PETITION<br>UNDER 37 CFR 1.47(a) |

This decision is in response to the applicant's "PETITION UNDER 37 C.F.R. § 1.47(a)" filed 21 February 2006 in the United States Patent and Trademark Office (USPTO). As authorized the $200.00 petition fee will be deducted from deposit account 19-0733.

## BACKGROUND

On 17 September 2003, applicant filed international application PCT/US03/29251 which claimed priority to an earlier U.S. application filed 19 September 2002. Pursuant to 37 CFR 1.495, the thirty-month period for paying the basic national fee in the United States was set to expire at midnight on 19 March 2005.

On 14 March 2005, applicant filed a transmittal letter for entry into the national stage in the United States which was accompanied by the requisite basic national fee as required by 35 U.S.C. 371(c)(1); an Information Disclosure Statement and a First preliminary amendment.

On 18 July 2005, applicant was mailed a "Notification of Missing Requirements" (Form PCT/DO/EO/905) informing applicant that an executed oath or declaration of the inventors in compliance with 37 CFR 1.497(a)-(b) was required. Applicant was afforded two months to file the required response and advised that this period could be extended pursuant to 37 CFR 1.136(a).

On 21 February 2006, applicant filed the present petition under 37 CFR 1.47(a) to accept the filed declaration without the signature of joint inventors Carlos E. Sosa and Scott C. Thompson accompanied by a petition for a five-month extension of time and payment of the appropriate petition fee. With the filing of the petition for a five-month extension of time and payment of the petition fee, in addition to 20 February 2006 being a federal holiday, the present

response is considered timely filed.

## DISCUSSION

A petition under 37 CFR 1.47(a) must be accompanied by (1) the fee under 37 CFR 1.17(i), (2) factual proof that the missing joint investor refuses to execute the application or cannot be reached after diligent effort, (3) a statement of the last known address of the missing inventor, and (4) an oath or declaration by each 37 CFR 1.47(a) applicant on his or her own behalf and on behalf of the non-signing joint inventor. With the filing of the present petition and accompanying papers, applicant has satisfied items 1, 3 and 4.

As to item (2), Section 409.03(d) of the Manual of Patent Examining Procedure (MPEP) states, in part: Where inability to find or reach a nonsigning inventor "after diligent effort" is the reason for filing under 37 CFR 1.47, a statement of facts should be submitted that fully describes the exact facts which are relied on to establish that a diligent effort was made.

> The fact that a nonsigning inventor is on vacation or out of town and is therefore temporarily unavailable to sign the declaration is not an acceptable reason for filing under 37 CFR 1.47... The statement of facts must be signed, where at all possible, by a person having firsthand knowledge of the facts recited therein. Statements based on hearsay will not normally be accepted. Copies of documentary evidence such as Internet searches, certified mail return receipts, cover letters of instructions, telegrams, that support a finding that the nonsigning inventor could not be found or reached should be made part of the statement. The steps taken to locate the whereabouts of the nonsigning inventor should include a statement of facts. It is important that the statement contain facts as opposed to conclusions.

Applicant has provided a declaration from Dr. Nathan D. Bills to support the contention that joint inventors Carlos E. Sosa and Scott C. Thompson cannot be located to execute the declaration and power of attorney document. Regarding inventor Sosa, Dr. Bills references attempts to locate a current address for the inventor through the use of Qwest DexOnline and Google. However, applicant has not included copies of these search results; these results are necessary in order perfect applicant's statement of diligent effort to locate inventor Sosa.

As to inventor Thompson, applicant references a returned Federal Express letter, but has not included a copy. It appears that the only attempt to locate a current address for the inventor after the letter was returned was a search of the phone book for the area surrounding Mr. Thompson's last known address. This is insufficient. Applicant should make use of internet search engines and/or employee contacts in a similar manner to those employed in attempting to locate inventor Sosa.

For the reasons stated above, it is not possible to grant applicant's petition at this time.

## CONCLUSION

For the reasons stated above, applicant's petition under 37 CFR 1.47(a) is **DISMISSED without prejudice**.

Any reconsideration on the merits of this petition must be filed within **TWO (2) MONTHS** from the mail date of this decision. Any reconsideration request should include a cover letter entitled "Renewed Petition Under 37 CFR 1.47(a)" Extensions of time may be obtained under 37 CFR 1.136(a).

Any further correspondence with respect to this matter should be directed to Mail Stop PCT, Commissioner for Patents, Office of PCT Legal Administration, P.O. Box 1450, Alexandria, Virginia 22313-1450, with the contents of the letter marked to the attention of the Office of PCT Legal Administration.

Derek A. Putonen
Attorney Advisor
Office of PCT Legal Administration
Tel: (571) 272-3294
Fax: (571) 273-0459

UNITED STATES PATENT AND TRADEMARK OFFICE

Commissioner for Patents
United States Patent and Trademark Office
P.O. Box 1450
Alexandria, VA 22313-1450
www.uspto.gov

27 OCT 2006

Lisa M. Hemmendinger
Banner & Witcoff
1001 G Street, NW
Washington, DC 20001

| | |
|---|---|
| In re Application of<br>BESCHORONER, et al.<br>Application No.: 10/527,587<br>PCT No.: PCT/US03/29251<br>Int. Filing Date: 17 September 2003<br>Priority Date: 19 September 2002<br>Atty. Docket No.: 00241.00003<br>For: GROWTH OF FOREIGN CELLS IN FETAL ANIMALS FACILITATED BY CONDITIONAL AND SELECTIVE DESTRUCTION OF HOST CELLS | DECISION ON RENEWED PETITION UNDER 37 CFR 1.47(a) |

This decision is in response to the applicant's "RENEWED PETITION UNDER 37 C.F.R. § 1.47(a)" filed 26 October 2006 in the United States Patent and Trademark Office (USPTO).

## BACKGROUND

On 27 April 2006, applicant was mailed a decision dismissing applicant's petition under 37 CFR 1.47(a) to accept the application without the signatures of inventors Carlos E. Sosa and Scott C. Thompson . Applicant was afforded two months to file a renewed petition.

On 26 October 2006, applicant filed the renewed petition under 37 CFR 1.47(a) discussed herein accompanied by a petition for a four-month extension of time and payment of the extension of time fee. As such, applicant's renewed petition is considered timely filed.

## DISCUSSION

As detailed in the decision mailed 27 April 2006, a petition under 37 CFR 1.47(a) must be accompanied by (1) the fee under 37 CFR 1.17(i), (2) factual proof that the missing joint investor refuses to execute the application or cannot be reached after diligent effort, (3) a statement of the last known address of the missing inventor, and (4) an oath or declaration by each 37 CFR 1.47(a) applicant on his or her own behalf and on behalf of the non-signing joint inventor. Applicant previously satisfied items 1, 3 and 4.

With the present filing of the declaration of Dr. Nathan D. Bills applicant has provided sufficient evidence that Carlos E. Sosa and Scott C. Thompson can not be located despite the diligent efforts of the applicant.

As such, it is proper to grant applicant's renewed petition at this time.

## CONCLUSION

For the reasons discussed above, applicant's renewed petition under 37 CFR 1.47(a) is **GRANTED**.

The application has an international filing date of 17 September 2003 under 35 U.S.C. 363, and will be given a date of **21 February 2006** under 35 U.S.C. 371(c)(1), (c)(2) and (c)(4).

As provided in 37 CFR 1.47(c), a notice of the filing of this application will be forwarded to the non-signing inventors at their last known addresses of record. A notice of the filing of the application under 37 CFR 1.47(a) will be published in the Official Gazette.

This application is being returned to the DO/EO/US for processing in accordance with this decision.

Derek A. Putonen
Attorney Advisor
Office of PCT Legal Administration
Tel: (571) 272-3294
Fax: (571) 273-0459

UNITED STATES PATENT AND TRADEMARK OFFICE

UNITED STATES DEPARTMENT OF COMMERCE
United States Patent and Trademark Office
Address: COMMISSIONER FOR PATENTS
P.O. Box 1450
Alexandria, Virginia 22313-1450
www.uspto.gov

Birch, Stewart, Kolasch & Birch, LLP
P.O. Box 747
Falls Church, VA 22040-0747

Mail Date: 04/21/2010

| | | |
|---|---|---|
| **Applicant** | : Amy Newman | : DECISION ON REQUEST FOR |
| **Patent Number** | : 7605259 | : RECALCULATION of PATENT |
| **Issue Date** | : 10/20/2009 | : TERM ADJUSTMENT IN VIEW |
| **Appliction No** | : 10/527,594 | : OF WYETH AND NOTICE OF INTENT TO |
| **Filed** | : 12/13/2005 | : ISSUE CERTIFICATE OF CORRECTION |
| | | : |

The Request for Recalculation is **GRANTED** to the extent indicated.

The patent term adjustment has been determined to be **852** days. The USPTO will *sua sponte* issue a certificate of correction reflecting the amount of PTA days determined by the recalculation.

Prior to the issuance of the certificate of correction, the USPTO will afford patentee an opportunity to be heard and request reconsideration. Accordingly, patentee has **one month or thirty (30) days**, whichever is longer, to file a request for reconsideration of this patent term adjustment calculation. See 35 U.S.C. 154(b)(3)(B)(ii) and 37 CFR 1.322(a)(4). No extensions of time will be granted under 37 CFR 1.136.

Patentee should use document code PET.OP if electronically filing a request for reconsideration of this patent term adjustment calculation. The patentee must also include the information required by 37 CFR 1.705(b)(2) and the fee required by 37 CFR 1.18(e). If patentee does not file a timely request for reconsideration of this patent term adjustment calculation including the information required by 37 CFR 1.705(b)(2) and the fee required by 37 CFR 1.18(e), the USPTO will issue a certificate of correction reflecting the PTA determination noted above.

Patentee should be aware that in order to preserve the right to review in the United States District Court for the District of Columbia of the USPTO patent term adjustment determination, patentee must ensure that he or she also take the steps required under 35 U.S.C. 154(b)(4)(A) in a timely manner. Nothing in the request for recalculation should be construed as providing an alternative time frame for commencing a civil action under 35 U.S.C. 154(b)(4)(A).

Any questions concerning this decision should be directed to the Office of Patent Legal Administration at 571-272-7702.

UNITED STATES PATENT AND TRADEMARK OFFICE

UNITED STATES DEPARTMENT OF COMMERCE
United States Patent and Trademark Office
Address: COMMISSIONER FOR PATENTS
P.O. Box 1450
Alexandria, Virginia 22313-1450
www.uspto.gov

IP GROUP OF DLA PIPER LLP (US)
ONE LIBERTY PLACE
1650 MARKET ST, SUITE 4900
PHILADELPHIA, PA 19103

Mail Date: 04/20/2010

| | | |
|---|---|---|
| **Applicant** | : Kazuhiko Maeda | : DECISION ON REQUEST FOR |
| **Patent Number** | : 7589142 | : RECALCULATION of PATENT |
| **Issue Date** | : 09/15/2009 | : TERM ADJUSTMENT IN VIEW |
| **Appliction No** | : 10/527,604 | : OF WYETH AND NOTICE OF INTENT TO |
| **Filed** | : 03/15/2005 | : ISSUE CERTIFICATE OF CORRECTION |
| | | : |

The Request for Recalculation is **GRANTED** to the extent indicated.

The patent term adjustment has been determined to be **448** days. The USPTO will *sua sponte* issue a certificate of correction reflecting the amount of PTA days determined by the recalculation.

Prior to the issuance of the certificate of correction, the USPTO will afford patentee an opportunity to be heard and request reconsideration. Accordingly, patentee has **one month or thirty (30) days**, whichever is longer, to file a request for reconsideration of this patent term adjustment calculation. See 35 U.S.C. 154(b)(3)(B)(ii) and 37 CFR 1.322(a)(4). No extensions of time will be granted under 37 CFR 1.136.

Patentee should use document code PET.OP if electronically filing a request for reconsideration of this patent term adjustment calculation. The patentee must also include the information required by 37 CFR 1.705(b)(2) and the fee required by 37 CFR 1.18(e). If patentee does not file a timely request for reconsideration of this patent term adjustment calculation including the information required by 37 CFR 1.705(b)(2) and the fee required by 37 CFR 1.18(e), the USPTO will issue a certificate of correction reflecting the PTA determination noted above.

Patentee should be aware that in order to preserve the right to review in the United States District Court for the District of Columbia of the USPTO patent term adjustment determination, patentee must ensure that he or she also take the steps required under 35 U.S.C. 154(b)(4)(A) in a timely manner. Nothing in the request for recalculation should be construed as providing an alternative time frame for commencing a civil action under 35 U.S.C. 154(b)(4)(A).

Any questions concerning this decision should be directed to the Office of Patent Legal Administration at 571-272-7702.

UNITED STATES PATENT AND TRADEMARK OFFICE

COMMISSIONER FOR PATENTS
UNITED STATES PATENT AND TRADEMARK OFFICE
P.O. BOX 1450
ALEXANDRIA, VA 22313-1450
www.uspto.gov

Paper No.

COPY MAILED

AUG 11 2009

OFFICE OF PETITIONS

MCCARTER & ENGLISH, LLP BOSTON
265 Franklin Street
Boston MA 02110

In re Application of :
Kapa et al. :
Application No. 10/527,628 : ON APPLICATION FOR
Filed: May 25, 2005 : PATENT TERM ADJUSTMENT
Atty Docket No. PI/4-32685A :
Title: PROCESS FOR PREPARING :
N-HYDROXYFORMAMIDO-PROPYL :
PYRROLIDIN COMPOUNDS AND :
INTERMEDIATES :

This is in response to the "APPLICATION FOR PATENT TERM ADJUSTMENT INCLUDING REQUEST FOR RECONSIDERATION UNDER 37 C.F.R. § 1.705(b)," filed July 2, 2009. Applicant submits that the correct patent term adjustment to be indicated on the patent is one thousand, one hundred and seventy-six (1176) days, not seven hundred and eighty-seven (787) days as calculated by the Office as of the mailing of the initial determination of patent term adjustment. Applicant requests this correction partly on the basis that the Office will take in excess of three years to issue this patent. Applicant further requests this correction on the basis that the Office will take in excess of four months from the payment of the issue fee to issue this patent.

As the instant application for patent term adjustment requests reconsideration of the patent term adjustment as it relates to the Office's failure to issue the patent within 3 years of the filing date and in excess of four months from the payment of the issue fee, the application for patent term adjustment under 37 CFR 1.705(b) is **DISMISSED as PREMATURE**.

Knowledge of the actual date the patent issues is required to calculate the amount, if any, of additional patent term patentee is entitled to for Office failure to issue the patent within 3 years. See § 1.702(b). (This is true even where a request for continued examination (RCE) was filed). The computer will not

undertake the § 1.702(b) calculation until the actual date of issuance of the patent has been determined. Likewise, the computer will not calculate any further Office delay under § 1.702(a)(4) or applicant delay under § 1.704(c)(10) until the actual date of issuance of the patent has been determined. As such, the Office cannot make a determination on the correctness of the patent term adjustment until the patent has issued.

Requesting reconsideration of the patent term adjustment to be indicated on the patent under 37 CFR 1.705(b) based on the initial determination of patent term adjustment and a projected issuance date of the patent (or even the filing date of the request for continued examination) is premature. Accordingly, it is appropriate to dismiss as premature such a request.

Rather than file an application for patent term adjustment under 37 CFR 1.705(b) contesting the 37 CFR 1.702(b) calculation at the time of the mailing of the notice of allowance, applicant is advised that they may wait until the time of the issuance of the patent and file a request for reconsideration of the patent term adjustment pursuant to 37 CFR 1.705(d). As the USPTO does not calculate the amount of time earned pursuant to 37 CFR 1.702(b) until the time of the issuance of the patent, the Office will consider any request for reconsideration of the patent term adjustment due to an error in the calculation of 37 CFR 1.702(b) to be timely if the request for reconsideration is filed within two months of the issuance of the patent. However, as to all other bases for contesting the initial determination of patent term adjustment received with the notice of allowance, applicant must timely file an application for patent term adjustment prior to the payment of the issue fee[1].

The $200.00 fee set forth in 37 CFR 1.18(e) for consideration of the application for patent term adjustment under 37 CFR 1.705(b)

---

[1] For example, if applicant disputes both the calculation of patent term adjustment under 37 CFR 1.702(a)(1) for Office failure to mail a first Office action or notice of allowance not later than fourteen months after the date on which the application was filed and under 37 CFR 1.702(b) for Office failure to issue a patent within three years of the actual filing date of the application, then applicant must still timely file an application for patent term adjustment prior to the payment of the issue fee to contest the calculation of Office delay in issuing a first Office action or notice of allowance. See 37 CFR 1.705(b) and 35 U.S.C. 154(b)(3)(B). A dispute as to the calculation of the §1.702(a)(1) period raised on request for reconsideration of patent term adjustment under 37 CFR 1.705(d) will be dismissed as untimely filed.

will be charged to applicant's Deposit Account in due course, as authorized on the fifth page of this petition.

Any request for reconsideration of the patent term adjustment indicated on the patent must be timely filed within 2 months after issuance pursuant to 37 CFR 1.705(d) and must include payment of the required fee under 37 CFR 1.18(e).

The Office of Data Management has been advised of this decision. This application is being referred to the Office of Data Management for issuance of the patent.

Telephone inquiries regarding this decision should be directed to Senior Attorney Paul Shanoski at (571) 272-3225.

Christina Tartera Donnell for

Anthony Knight
Supervisor
Office of Petitions

UNITED STATES PATENT AND TRADEMARK OFFICE

COMMISSIONER FOR PATENTS
UNITED STATES PATENT AND TRADEMARK OFFICE
P.O. BOX 1450
ALEXANDRIA, VA 22313-1450
www.uspto.gov

Paper No.

McCarter & English, LLP
Novartis Institutes for BioMedical Research, Inc.
265 Franklin Street
Boston MA 02110

MAILED

JUN 21 2010

OFFICE OF PETITIONS

| | | |
|---|---|---|
| In re Patent No. 7,589,216 | : | DECISION ON REQUEST |
| Kapa et al. | : | FOR |
| Issue Date: September 15, 2009 | : | RECONSIDERATION OF |
| Application No. 10/527,628 | : | PATENT TERM ADJUSTMENT |
| Filed: May 25, 2005 | : | and |
| Atty Docket No. PI/4-32685A | : | NOTICE OF INTENT TO ISSUE |
| | : | CERTIFICATE OF CORRECTION |

This is a decision on the petition filed on October 5, 2009, which is being treated as a petition under 37 CFR 1.705(d) requesting that the patent term adjustment indicated on the above-identified patent be corrected to indicate that the term of the above-identified patent is extended or adjusted by one thousand, one hundred and forty-six (1146) days.

The petition to correct the patent term adjustment indicated on the above-identified patent to indicate that the term of the above-identified patent is extended or adjusted by one thousand, one hundred and forty-eight (1148) days is **GRANTED to the extent indicated herein.**

The Office acknowledges submission of the $200.00 fee set forth in 37 CFR 1.18(e). No additional fees are required.

Petitioner has asserted that the commencement of this application occurred on March 14, 2005. The priority date is September 19, 2002, and the thirty-month anniversary of this date is March 19, 2005. March 19, 2005 fell on a Saturday, which means that the commencement date is the next business day: March 21, 2005.

The patent issued three years and 543 days after the commencement date, and as such, the period of "B-delay" totals

543 days. The days beginning on March 22, 2008 and ending on September 19, 2008 overlap with the period of "B-delay," and as such there are 182 days of overlap. Reducing the 543-day "B-delay" by the 182 days of overlap results in 361 days of patent term adjustment that will be added to the 787 days of patent term adjustment that has already been accorded, to result in a patent term adjustment of 1148 days.

The Office will *sua sponte* issue a certificate of correction. Pursuant to 37 CFR 1.322, the Office will not issue a certificate of correction without first providing assignee or patentee an opportunity to be heard. Accordingly, patentees are given **one (1) month or thirty (30) days**, whichever is longer, from the mail date of this decision to respond. No extensions of time will be granted under § 1.136.

The application is being forwarded to the Certificates of Branch for issuance of a certificate of correction. The Office will issue a certificate of correction indicating that the term of the above-identified patent is extended or adjusted by **one thousand, one hundred and forty-eight (1148) days**.

Telephone inquiries specific to this matter should be directed to Senior Attorney Paul Shanoski at (571) 272-3225.

Nancy Johnson
Senior Petitions Attorney
Office of Petitions

Enclosure: Copy of DRAFT Certificate of Correction

UNITED STATES PATENT AND TRADEMARK OFFICE

# CERTIFICATE OF CORRECTION

PATENT : 7,589,216 B2

DATED : **September 15, 2009** **DRAFT**

INVENTOR(S) : Kapa et al.

It is certified that error appears in the above-identified patent and that said Letters Patent is hereby corrected as shown below:

On the cover page,

[*] Notice: Subject to any disclaimer, the term of this patent is extended or adjusted under 35 USC 154(b) by 787 days

Delete the phrase "by 787 days" and insert – by 1148 days--

UNITED STATES PATENT AND TRADEMARK OFFICE

Commissioner for Patents
United States Patent and Trademark Office
P.O. Box 1450
Alexandria, VA 22313-1450
www.uspto.gov

19 SEP 2006

Davidson Davidson & Kappel
485 Seventh Avenue
14th Floor
New York NY 10018

| | | |
|---|---|---|
| In re Application of | : | DECISION |
| BECKER et al. | : | |
| Application No.: 10/527,629 | : | |
| PCT No.: PCT/EP2003/009922 | : | |
| Int. Filing Date: 06 September 2003 | : | |
| Priority Date: 13 September 2002 | : | |
| Attorney Docket No.: 710.1015 | : | |
| For: METHOD AND DEVICE FOR THE | : | |
| POSITIONALLY PRECISE MOUNTING OF AN | : | |
| ADD-ON PART ON A VEHICLE BODY | : | |

This decision is in response to applicants' submission filed in the United States Patent and Trademark Office (USPTO) on 27 July 2006 which includes a declaration of inventors and a petition to revive under 37 CFR 1.137(b).

## BACKGROUND

On 06 September 2003, applicants filed international application PCT/EP2003/009922, which designated the U.S. and claimed a priority date of 13 September 2002. A copy of the international application was communicated to the USPTO from the International Bureau on 01 April 2004. The thirty-month period for paying the basic national fee in the United States expired at midnight on 14 March 2005 (13 March 2005 being a Sunday).

On 14 March 2005, applicants filed a submission for entry into the national stage in the United States which was accompanied by, *inter alia*, the U.S. Basic National Fee.

On 14 October 2005, the United States Designated/Elected Office (DO/EO/US) mailed a NOTIFICATION OF MISSING REQUIREMENTS UNDER 35 U.S.C. 371 (Form PCT/DO/EO/905) indicating, *inter alia*, that applicant must provide an oath or declaration of the inventors in compliance with 37 CFR 1.497(a)-(b) and the surcharge under 37 CFR 1.492(h) for filing any of the search fee, the examination fee, or the oath or declaration after the date of the commencement of the national stage. The NOTIFICATION set a two-month extendable period for reply.

On 13 July 2006, the DO/EO/US mailed a NOTIFICATION OF ABANDONMENT (Form PCT/DO/EO/909) indicating that the application was abandoned as to the United States of America for failure to respond to the NOTIFICATION OF MISSING REQUIREMENTS mailed 14 October 2005.

On 27 July 2006, applicants filed the instant submission which includes a declaration of inventors and a petition to revive under 37 CFR 1.137(b).

**DISCUSSION**

A petition to revive the present application under 37 CFR 1.137(b) must include:
(1) The required reply;
(2) The petition fee;
(3) A statement that the entire delay in filing the required reply from the due date for the reply until the filing of a grantable petition was unintentional.

As to item (1), the declaration of inventors filed 27 July 2006 is in compliance with 37 CFR 1.497(a)-(b).

As to item (2), applicant submitted the petition fee on 27 July 2006.

As to item (3), the required statement has been provided.

**CONCLUSION**

The petition under 37 CFR 1.137(b) is **GRANTED** for the reasons set forth above.

Please direct further correspondence with respect to this matter to Mail Stop PCT, Commissioner for Patents, Office of PCT Legal Administration, P.O. Box 1450, Alexandria, Virginia 22313-1450, with the contents of the letter marked to the attention of the Office of PCT Legal Administration.

This application is being forwarded to the National Stage Processing Branch of the Office of PCT Operations to continue national stage processing of the application.

Daniel Stemmer
Legal Examiner
PCT Legal Affairs
Office of Patent Cooperation Treaty
Legal Administration
Telephone: (571) 272-3301
Facsimile: (571) 273-0459

UNITED STATES PATENT AND TRADEMARK OFFICE

COMMISSIONER FOR PATENTS
UNITED STATES PATENT AND TRADEMARK OFFICE
P.O. BOX 1450
ALEXANDRIA, VA 22313-1450
www.uspto.gov

KNOBBE MARTENS OLSON & BEAR LLP
2040 MAIN STREET
FOURTEENTH FLOOR
IRVINE CA 92614

COPY MAILED

AUG 08 2006

OFFICE OF PETITIONS

Applicant: Luo et al.
Appl. No.: 10/527,639
International Filing Date: September 13, 2002
Title: NOZZLE INFORMATION RETRIEVAL SYSTEM AND SERVER CONSTITUTING THIS SYSTEM
Attorney Docket No.: UNIU86.001APC
Pub. No.: US 2006/0041557 A1
Pub. Date: February 23, 2006

This is a decision on the paper requesting a corrected publication under 37 CFR 1.221(b) received on April 19, 2006, for the above-identified application

The request is DISMISSED.

Applicant requests that the application be republished because the patent application publication contains a material error as the Office misprinted the word "This" for "The" in the title of the invention.

37 CFR 1.221 (b) is applicable "only when the Office makes a material mistake which is apparent from Office records.... Any request for a corrected publication or revised patent application publication other than provided as provided in paragraph (a) of this section must be filed within two months from the date of the patent application publication. This period is not extendable." A material mistake must affect the public's ability to appreciate the technical disclosure of the patent application publication, to determine the scope of the patent application publication, or to determine the scope of the provisional rights that an applicant may seek to enforce upon issuance of a patent. [1]

The instant request does not identify a material mistake in the publication made by the Office. The word "This" is used in the title of the invention on the cover page of the WIPO publication. The Office will normally use the title of the invention indicated on the cover page of the publication as the title of the national stage application that will appear on the filing receipt. The cover page will include an English translation of the title if the international application was published in a foreign language. See PCT Rule 48.3(c). Applicants desiring to have the filing

[1] Changes to Implement Eighteen-Month Publication of Patent Applications, 65 FR 57023, 57038 (Sept. 20, 2000), 1239, Off. Gaz. Pat. Office Notices 63, 75 (Oct. 10, 2000) (final rule).

receipt reflect a title that is different than the English language title appearing on the cover page must submit either a preliminary amendment amending the title or an application data sheet (37 CFR 1.76) with the desired title. See MPEP 1893.03(e).

Applicant is reminded of his duty to conduct a reasonable inquiry before filing a paper before the Office. See MPEP 410.

Applicant's request for a Corrected Publication on April 19, 2006, may constitute a "failure to engage in reasonable efforts to conclude processing or examination of the application." See 1.704(c). This determination will be made on or after a mailing of a Notice of Allowance.

On September 23, 2005, a Filing Receipt was mailed by the Office, which listed the title as "NOZZLE INFORMATION RETRIEVAL SYSTEM AND SERVER CONSTITUTING THIS SYSTEM." To avoid this type of problem or to make a change in the title in the future, applicant's representative should make request a corrected filing receipt along with a supplemental application data sheet.

The applicant is advised that a "request for republication of an application previously published" may be filed under 37 CFR 1.221 (a). Such a request for republication "must include a copy of the application compliance with the Office's electronic filing system requirements and be accompanied by the publication fee set forth in § 1.18 (d) and the processing fee set forth in § 1.17 (i)." If the request for republication does not comply with the electronic filing system requirements, the republication will not take place and the publication fee set forth in § 1.18 (d) will be refunded. The processing fee will be retained.

Any request for republication under 37 CFR 1.221(a), must be submitted via the EFS system and questions or request for reconsideration of the decision, should be addressed as follows:

By mail to: Mail Stop PGPUB
Commissioner for Patents
P.O. Box 1450
Alexandria, Va. 22313-1450

By facsimile: 571-273-8300

Inquiries relating to this matter may be directed to Mark Polutta at (571) 272-7709 (voice).

Mark Polutta
Senior Legal Advisor
Office of Patent Legal Administration
Office of the Deputy Commissioner
for Patent Examination Policy

UNITED STATES PATENT AND TRADEMARK OFFICE

UNITED STATES DEPARTMENT OF COMMERCE
United States Patent and Trademark Office
Address: COMMISSIONER FOR PATENTS
P.O. Box 1450
Alexandria, Virginia 22313-1450
www.uspto.gov

BLACK LOWE & GRAHAM, PLLC
701 FIFTH AVENUE
SUITE 4800
SEATTLE, WA 98104

Mail Date: 05/14/2010

| | | |
|---|---|---|
| **Applicant** | : George Ahlbaumer | : DECISION ON REQUEST FOR |
| **Patent Number** | : 7617618 | : RECALCULATION of PATENT |
| **Issue Date** | : 11/17/2009 | : TERM ADJUSTMENT IN VIEW |
| **Application No** | : 10/527,645 | : OF WYETH AND NOTICE OF INTENT TO |
| **Filed** | : 02/06/2006 | : ISSUE CERTIFICATE OF CORRECTION |
| | | : |

The Request for Recalculation is **GRANTED** to the extent indicated.

The patent term adjustment has been determined to be **956** days. The USPTO will *sua sponte* issue a certificate of correction reflecting the amount of PTA days determined by the recalculation.

Prior to the issuance of the certificate of correction, the USPTO will afford patentee an opportunity to be heard and request reconsideration. Accordingly, patentee has **one month or thirty (30) days**, whichever is longer, to file a request for reconsideration of this patent term adjustment calculation. See 35 U.S.C. 154(b)(3)(B)(ii) and 37 CFR 1.322(a)(4). No extensions of time will be granted under 37 CFR 1.136.

Patentee should use document code PET.OP if electronically filing a request for reconsideration of this patent term adjustment calculation. The patentee must also include the information required by 37 CFR 1.705(b)(2) and the fee required by 37 CFR 1.18(e). If patentee does not file a timely request for reconsideration of this patent term adjustment calculation including the information required by 37 CFR 1.705(b)(2) and the fee required by 37 CFR 1.18(e), the USPTO will issue a certificate of correction reflecting the PTA determination noted above.

Patentee should be aware that in order to preserve the right to review in the United States District Court for the District of Columbia of the USPTO patent term adjustment determination, patentee must ensure that he or she also take the steps required under 35 U.S.C. 154(b)(4)(A) in a timely manner. Nothing in the request for recalculation should be construed as providing an alternative time frame for commencing a civil action under 35 U.S.C. 154(b)(4)(A).

Any questions concerning this decision should be directed to the Office of Patent Legal Administration at 571-272-7702.

UNITED STATES PATENT AND TRADEMARK OFFICE

FEB 28 2007

Commissioner for Patents
United States Patent and Trademark Office
P.O. Box 1450
Alexandria, VA 22313-1450
www.uspto.gov

KUNZLER & ASSOCIATES
8 EAST BROADWAY
SUITE 600
SALT LAKE CITY UT 84111

| | |
|---|---|
| In re Application of | : |
| Edwin O. Miner et al | : |
| Serial No.: 10/527,655 | : PETITION TO MAKE SPECIAL |
| Filed: March 14, 2005 | : |
| Attorney Docket No.: 0M02-01 | : |

This is in response to applicants' petition filed January 2, 2006, to make the above-identified application special under the provisions of 37 CFR 1.102(d). The delay in acting on this petition was due to delays in processing the National Stage entry papers and failure to notify the deciding Authority of the existence of a petition. Further, no indication is given as to the reason for requesting the application be made special and it is presumed that applicants are making the request in view of M.P.E.P. 708.02, VIII.

Applicant has satisfied the provisions set forth in M.P.E.P. 708.02, VIII. Therefor the petition is **GRANTED**.

**The following condition applies to the grant of this petition: If, upon examination, it is determined that a restriction requirement is necessary because of multiple inventions being claimed, applicant will be required to make an election without traverse of a single invention to be prosecuted. Failure to make an election without traverse will void the special status accorded in this decision.**

**The application will be forwarded the examiner for action on the merits commensurate with this decision.**

Should there be any questions with regard to this letter please contact William R. Dixon, Jr. by letter addressed to the Director, Technology Center 1600, P.O. Box 1450, Alexandria, VA 22313-1450, or by telephone at 571-272-0519 or by facsimile transmission at the general Office facsimile number, 571-273-8300.

William R. Dixon, Jr.
Special Program Examiner
Technology Center 1600

06 SEP 2006

UNITED STATES PATENT AND TRADEMARK OFFICE

Commissioner for Patents
United States Patent and Trademark Office
P.O. Box 1450
Alexandria, VA 22313-1450
www.uspto.gov

Chiron Corporation
Intellectual Property - R440
P.O. Box 8097
Emeryville, CA 94662-8097

In re Application of
RAPPUOLI et al.
Application No.: 10/527,672
PCT No.: PCT/US03/29167
Int. Filing Date: 15 September 2003
Priority Date: 13 September 2002
Attorney Docket No.: 002441.00121
For: GROUP B STREPTOCOCCUS VACCINE

DECISION ON REQUEST

This decision is issued in response to applicants' "Response to Notification of Defective Response; Correction of Inventorship under 37 CFR 1.497(d)" filed 27 July 2006 to correct the inventorship of the present national stage application.

## BACKGROUND

On 15 September 2003, applicants filed international application PCT/US03/29167 which claimed a priority date of 13 September 2002. The published international application identified Rino Rappuoli as the sole applicant/inventor for the United States. The deadline for submission of the basic national fee was thirty months from the international filing date, i.e., 13 March 2005.

On 11 March 2005, applicants filed a transmittal letter for entry into the national stage in the United States accompanied by, among other materials, payment of the basic national fee; a copy of the international application; and a preliminary amendment.

On 14 September 2006, the United Stated Designated/Elected Office mailed a Notification of Missing Requirements (Form PCT/DO/EO/905) indicating that an oath or declaration in compliance with 37 CFR 1.497(a) and (b) must be filed. The notification set a two-month time limit in which to respond.

On 18 April 2006, applicants filed a declaration executed by: Rino Rappuoli; John Telford; and Guido Grandi.

On 28 June 2006, the United States Designated/Elected Office (DO/EO/US) mailed a Notification of Defective Response (Form PCT/DO/EO/916) indicating that the declaration was defective because the second and third inventors were not identified on the international application.

## DISCUSSION

The present submission seeks to correct the inventorship so as to add inventors John Telford and Guido Grandi to the application. Where, as here, the inventorship in the national stage declaration is not consistent with the inventorship in the international application, applicants must correct the inventorship pursuant to 37 CFR 1.497(d), which states the following:

> (d) If the oath or declaration filed pursuant to 35 U.S.C. 371(c)(4) and this section names an inventive entity different from the inventive entity set forth in the international application, the oath or declaration must be accompanied by:
>
> > (1) A statement from each person being added as an inventor and from each person being deleted as an inventor that any error in inventorship in the international application occurred without deceptive intention on his or her part;
> > (2) The processing fee set forth in § 1.17; and
> > (3) If an assignment has been executed by any of the original named inventors, the written consent of the assignees (see § 3.73(b) of this chapter).
> > (4) any new oath or declaration required by paragraph (f) of this subsection.

Items (1); (2); (3); and (4) have been satisfied.

## CONCLUSION

The request under 37 CFR 1.497(d) is **GRANTED**.

A review of the application papers reveals that applicants have completed all the requirements of 35 U.S.C. 371 for entry into the national stage.

This application will be given an international application filing date of 15 September 2003 and a date of **18 April 2006** under 35 U.S.C. 371. The application is being returned to the United States Designated/Elected Office for further processing in accordance with this decision.

Anthony Smith

Anthony Smith
Attorney-Advisor
Office of PCT Legal Administration
Tel: (571) 272-3298
Fax: (571) 273-0459

UNITED STATES PATENT AND TRADEMARK OFFICE

Commissioner for Patents
United States Patent and Trademark Office
Washington, D.C. 20231
www.uspto.gov

10 APR 2007

Novartis Vaccines and Diagnositcs Inc.
Corporate Intellectual Property R338
P.O. Box 8097
Emeryville, CA 94662

| | |
|---|---|
| In re Application of<br>RAPPUOLI, et al.<br>U.S. Application No.: 10/527,672<br>PCT No.: PCT/US03/29167<br>International Filing Date: 15 September 2003<br>Priority Date: 13 September 2002<br>Attorney's Docket No.: 002441.00121<br>For: GROUP B STREPTOCOCCUS VACCINE | DECISION |

This decision is issued in response to the "Petition to Correct the Filing Date of the Application Submitted under 35 U.S.C. 371 in the United States Designated/Elected Office" filed 14 March 2007 which has been treated as a petition under 37 CFR 1.181 seeking a corrected filing receipt indicating 14 April 2006 as the filing date for the present application.

## BACKGROUND

On 11 March 2005, applicants filed a transmittal letter for entry into the national stage in the United States accompanied by, among other materials, payment of the basic national fee; a copy of the international application; and a preliminary amendment.

On 14 September 2006, the United Stated Designated/Elected Office mailed a Notification of Missing Requirements (Form PCT/DO/EO/905) indicating that an oath or declaration in compliance with 37 CFR 1.497(a) and (b) must be filed. The notification set a two-month time limit in which to respond.

On 18 April 2006, applicants filed a declaration executed by: Rino Rappuoli; John Telford; and Guido Grandi.

On 08 November 2006, the DO/EO/US mailed a Notification Of Acceptance Of Application Under 35 U.S.C. 371 (Form PCT/DO/EO/903) identifying 18 April 2006 as the date of receipt of the 35 U.S.C. 371 requirements. Subsequently, a filing receipt was mailed to applicants. This filing receipt identified the "filing date" as 18 April 2006.

On 14 March 2007, applicants filed the "Petition to Correct the Filing Date of the Application Submitted under 35 U.S.C. 371 in the United States Designated/Elected Office" considered herein, which requests that the filing date of 18 April 2006 be changed to 14 April 2006.

## DISCUSSION

The filing date set forth on the filing date corresponds with the date on which the 35 U.S.C. 371 requirements are completed, such date also being indicated on the Notification Of Acceptance (see MPEP section 1895.01). Here, the date on the Notification Of Acceptance and the filing receipt is 18 April 2006, the date on which the declaration completing the 35 U.S.C. 371 requirements was received at the USPTO. Applicants here seek to have this date changed to 14 April 2006, the date on which the declaration was deposited as first class mail with the USPTO. However, as clearly set forth in 37 CFR 1.8(a), a certification of mailing by first class mail is only used for determining whether a piece of correspondence has been timely submitted (as was done here); "[t]he actual date of receipt will be used for all other purposes." Had applicants desired the submission to be treated as having been filed on the date it was deposited with the USPS, then the "Express Mail" procedure set forth in 37 CFR 1.10 should have been followed.

Based on the above, the declaration by which applicants completed the 35 U.S.C. 371 requirements was properly accorded a filing date of 18 April 2006, the date it was received in the USPTO. Accordingly, the filing date on the filing receipt is correct.

## CONCLUSION

For the reasons above, applicants' request to change the filing date on the filing receipt is **DISMISSED** without prejudice.

Any reconsideration on the merits of these petition(s) must be filed within **TWO (2) MONTHS** from the mail date of this decision to file a response. No petition fee is required.

Any further correspondence with respect to this matter should be directed to Mail Stop PCT, Commissioner for Patents, Office of PCT Legal Administration, P.O. Box 1450, Alexandria, Virginia 22313-1450, with the contents of the letter marked to the attention of the Office of PCT Legal Administration.

Anthony Smith

Anthony Smith
Attorney-Advisor
Office of PCT Legal Administration
Tel: (571) 272-3298
Fax: (571) 273-0459

17 MAR 2006

United States Patent and Trademark Office

#6

Commissioner for Patents
United States Patent and Trademark Office
P.O. Box 1450
Alexandria, VA 22313-1450
www.uspto.gov

Buchanan Ingersoll, PC
1835 Market Street, 14th Floor
Philadelphia, PA 19103-2985

| | | |
|---|---|---|
| In re Application of | : | |
| Faubel et al. | : | |
| Application No.: 10/527,676 | : | |
| PCT No.: PCT/EP03/10164 | : | |
| Int. Filing Date: 12 September 2003 | : | DECISION |
| Priority Date: 13 September 2002 | : | |
| Attorney Docket No.: 46955.22 | : | |
| For: Liquid Trap For Collecting | : | |
| Liquids In A Vacuum Device | : | |

This is in response to the "Response To Notification Of Missing Requirements..." filed on 16 December 2005.

## BACKGROUND

This international application was filed on 12 September 2003, claimed an earlier priority date of 13 September 2002, and designated the U.S. The International Bureau transmitted a copy of the published international application to the USPTO on 01 April 2004. The 30 month time period for paying the basic national fee in the United States expired at midnight on 14 March 2005 (since 13 March 2005 was a Sunday). Applicant filed *inter alia* the basic national fee on 11 March 2005.

On 12 October 2005, a Notification of Missing Requirements (Form PCT/DO/EO/905) was mailed to applicant, requiring the submission of an executed oath or declaration and a surcharge under 37 CFR 1.492(h).

## DISCUSSION

The instant "Response..." is accompanied by the surcharge under 37 CFR 1.492(h) and by a signed declaration. Inspection of the declaration reveals that it nominates three joint inventors (Bernd Abel, Jens Assman and Eugene Lugovoi) who are not named in the published international application. The application file currently contains no evidence suggesting that any of said three inventors were added to the international application pursuant to PCT Rule 92*bis*. Accordingly, it would not be appropriate to accept the declaration on the basis of the present record. Counsel may wish to entertain the possibility of filing a submission pursuant to PCT Rule 1.497(d) to resolve this matter.

## DECISION

The declaration filed on 16 December 2005 is **NOT ACCEPTED**, without prejudice.

Applicants are required to file a response within ***EITHER*** the remainder of the period to respond to the Form PCT/DO/EO/905 mailed on 12 October 2005 (as extendable under 37 CFR 1.136(a)) ***OR*** **ONE (1) MONTH** of the mailing date of this decision (**NOT** extendable under 37 CFR 1.136(a)), whichever time period expires later. Failure to reply will result in **ABANDONMENT** of this international application with respect to the U.S. national stage.

Any further correspondence with respect to this matter should be addressed to the Assistant Commissioner for Patents, P.O. Box 1450, Mail Stop PCT, Alexandria, VA 22313-1450, with the contents of the letter marked to the attention of the PCT Legal Office.

Boris Milef
PCT Legal Examiner
PCT Legal Office

George M. Dombroske
PCT Legal Examiner
PCT Legal Office
Tel: (571) 272-3283
Fax: (571) 273-0459

08 SEP 2006

United States Patent and Trademark Office

Commissioner for Patents
United States Patent and Trademark Office
P.O. Box 1450
Alexandria, VA 22313-1450
www.uspto.gov

DRINKER BIDDLE & REATH
ATTN: INTELLECTUAL PROPERTY GROUP
ONE LOGAN SQUARE
18TH AND CHERRY STREETS
PHILADELPHIA PA 19103-6996

| | | |
|---|---|---|
| In re Application of | : | |
| Faubel et al. | : | |
| Application No.: 10/527,676 | : | |
| PCT No.: PCT/EP03/10164 | : | |
| Int. Filing Date: 12 September 2003 | : | DECISION |
| Priority Date: 13 September 2002 | : | |
| Attorney Docket No.: 46955.22 | : | |
| For: Liquid Trap For Collecting | : | |
| Liquids In A Vacuum Device | : | |

This is in response to the submission under 37 CFR 1.497(d) filed on 04 May 2006.

## DISCUSSION

In a decision mailed on 17 March 2006, the declaration filed on 16 December 2005 was not accepted, without prejudice, because

> The instant "Response..." is accompanied by the surcharge under 37 CFR 1.492(h) and by a signed declaration. Inspection of the declaration reveals that it nominates three joint inventors (Bernd Abel, Jens Assman and Eugene Lugovoi) who are not named in the published international application. The application file currently contains no evidence suggesting that any of said three inventors were added to the international application pursuant to PCT Rule 92*bis*. Accordingly, it would not be appropriate to accept the declaration on the basis of the present record. Counsel may wish to entertain the possibility of filing a submission pursuant to PCT Rule 1.497(d) to resolve this matter.

The instant response alludes to 37 CFR 1.497(d) in requesting acceptance of the declaration. A declaration filed under 37 CFR 1.497 (d) must be by the actual inventor or inventors as required under 37 CFR 1.63 or as permitted by 37 CFR 1.42, 1.43 or 1.47. The declaration must be accompanied by (1) a statement from each person being added as an inventor and from each person being deleted as an inventor that the error in inventorship occurred without deceptive intention on his or her part, (2) the processing fee set forth in 37 CFR 1.17; and (3) if an assignment has been executed by any of the original named inventors, the written consent of the assignee (*See* 37 CFR 3.73(b)). *See* Section 201.03 of the Manual of Patent Examining Procedure (M.P.E.P.).

Regarding requirement (1), applicants have provided an appropriate statement signed by Bernd Abel, Jens Assman and Eugene Lugovoi.

Regarding requirement (2), the required processing fee was paid on 04 May 2006.

Regarding requirement (3), the instant correspondence includes a copy of an assignment document executed on behalf of two assignees, Max-Planck-Gesellschaft Zur Foerderung Der Wissenschaften ("Max Planck") and Georg-August-Universitat Gottingen ("Georg-August") by Manfred Faubel, Ales Charvat, Jurgen Troe, Bernd Abel, Jens Assman and Eugene Lugovoi, as well as an indication of the reel and frame numbers where said assignment has been recorded in the USPTO. Also present is a "Statement of Consent by Assignee under 37 CFR 1.48(a)(5)" purporting to show the consent to the addition of Bernd Abel, Jens Assman and Eugene Lugovoi as inventors by assignee Max Planck. This statement is signed on behalf of Max Planck by Christa Herzog in the capacity of "Head of Patent Department." There is no statement that Ms. Herzog enjoys the authority to sign on behalf of the assignee, and the position of "Head of Patent Department" does not establish apparent authority to sign because an individual with this title would not ordinarily be expected to enjoy such authority to act on behalf of an organization. Meanwhile, the instant correspondence does not include any document purporting to evidence the consent of the other assignee, Georg-August, to the proposed change in inventorship. For all of these reasons, it would not be appropriate on the basis of the present record to conclude that requirement (3) has been satisfied.

It is noted that counsel refers to copies of a German language "Antrag gemäs Regel 92bisPCT" and to a sheet printed "from the esp@cenet database" as evidence that applicants attempted to record the change in inventorship pursuant to Rule 92bis. However, counsel has not provided a translation of the "Antrag..." and, in any event, this document at most establishes that applicants intended to request the recordation of a change. Meanwhile, the esp@cenet printout suggests that Abel, Assman and Lugovoi are recorded as inventors in the esp@cenet database, but this does not demonstrate that they have been recorded as inventors in the international application pursuant to Rule 92bis.

## CONCLUSION

The declaration is **NOT ACCEPTED** under 37 CFR 1.497(d), without prejudice.

If reconsideration on the merits of this matter is desired, a proper response must be filed within **TWO (2) MONTHS** from the mail date of this decision. Extensions of time are available under 37 CFR 1.136(a). Failure to timely reply will result in **ABANDONMENT** of this application. Any reconsideration request should include a cover letter entitled "Renewed Submission Under 37 CFR 1.497(d)". No additional processing fee is required.

Please direct any further correspondence with respect to this matter to the Assistant Commissioner for Patents, Mail Stop PCT, P.O. Box 1450, Alexandria, VA 22313-1450, and address the contents of the letter to the attention of the PCT Legal Office.

Boris Milef
PCT Legal Examiner
Office of PCT Legal Administration

George M. Dombroske
PCT Legal Examiner
Office of PCT Legal Administration
Tel: (571) 272-3283
Fax: (571) 273-0459

United States Patent and Trademark Office

Commissioner for Patents
United States Patent and Trademark Office
P.O. Box 1450
Alexandria, VA 22313-1450
www.uspto.gov

#10

0 8 JAN 2007

DRINKER BIDDLE & REATH
ATTN: INTELLECTUAL PROPERTY GROUP
ONE LOGAN SQUARE
18TH AND CHERRY STREETS
PHILADELPHIA PA 19103-6996

| | | |
|---|---|---|
| In re Application of | : | |
| Faubel et al. | : | |
| Application No.: 10/527,676 | : | |
| PCT No.: PCT/EP03/10164 | : | |
| Int. Filing Date: 12 September 2003 | : | DECISION |
| Priority Date: 13 September 2002 | : | |
| Attorney Docket No.: 46955.22 | : | |
| For: Liquid Trap For Collecting | : | |
| Liquids In A Vacuum Device | : | |

This is in response to the renewed submission under 37 CFR 1.497(d) filed on 07 November 2006.

## DISCUSSION

In a decision mailed on 08 September 2006, the declaration filed on 16 December 2005 was not accepted, without prejudice, in view of the submission under 37 CFR 1.497(d) filed on 04 May 2006, because

> Regarding requirement (3), the instant correspondence includes a copy of an assignment document executed on behalf of two assignees, Max-Planck-Gesellschaft Zur Foerderung Der Wissenschaften ("Max Planck") and Georg-August-Universitat Gottingen ("Georg-August") by Manfred Faubel, Ales Charvat, Jurgen Troe, Bernd Abel, Jens Assman and Eugene Lugovoi, as well as an indication of the reel and frame numbers where said assignment has been recorded in the USPTO. Also present is a "Statement of Consent by Assignee under 37 CFR 1.48(a)(5)" purporting to show the consent to the addition of Bernd Abel, Jens Assman and Eugene Lugovoi as inventors by assignee Max Planck. This statement is signed on behalf of Max Planck by Christa Herzog in the capacity of "Head of Patent Department." There is no statement that Ms. Herzog enjoys the authority to sign on behalf of the assignee, and the position of "Head of Patent Department" does not establish apparent authority to sign because an individual with this title would not ordinarily be expected to enjoy such authority to act on behalf of an organization. Meanwhile, the instant correspondence does not include any document purporting to evidence the consent of the other assignee, Georg-August, to the proposed change in inventorship. For all of these reasons, it would not be appropriate on the basis of the present record to conclude that requirement (3) has been satisfied.

The instant renewed submission under 37 CFR 1.497(d) is accompanied by a new "Statement of Consent..." executed on behalf of "Max-Planck" by Christa Herzog, who is characterized as acting in the capacity of "Authorized Signatory for Max-Planck..." This is

accompanied by a German language "Vollmacht" and English translation thereof. Applicants have also provided a "Statement of Consent..." executed on behalf of "Georg-August" by Ralf Fischer, who is characterized as acting in the capacity of "Authorized Signatory for Georg-August..." As both assignees have consented to the change in inventorship via instruments executed by individuals whose authority to sign is reflected by "a statement that the person signing the submission is authorized to act on behalf of the assignee," all of the requirements of 37 CFR 3.73(b) and of 37 CFR 1.497(d)(3) have now been satisfied. As such, it would now be appropriate to grant the requested relief under 37 CFR 1.497(d).

## CONCLUSION

The declaration filed on 16 December 2005 is **ACCEPTED** under 37 CFR 1.497(d).

This application is being forwarded to the National Stage Processing Branch for further processing. Its date under 35 U.S.C. 371(c)(1), (2) and (4) is **16 December 2005**.

George Dombroske
PCT Legal Examiner
Office of PCT Legal Administration
Tel: (571) 272-3283
Fax: (571) 273-0459

06 APR 2006

#5

UNITED STATES PATENT AND TRADEMARK OFFICE

Commissioner for Patents
United States Patent and Trademark Office
P.O. Box 1450
Alexandria, VA 22313-1450
www.uspto.gov

BIRCH STEWART KOLASCH & BIRCH
PO BOX 747
FALLS CHURCH VA 22040-0747

| | | |
|---|---|---|
| In re Application of | : | |
| FELZMANN | : | |
| Application No.: 10/527,679 | : | DECISION |
| PCT No.: PCT/EP03/09591 | : | |
| Int. Filing Date: 29 August 2003 | : | |
| Priority Date: 13 September 2002 | : | |
| Attorney Docket No.: 4518-0101PUS1 | : | |
| For: USE OF DENDRITIC CELLS (DCS) | : | |
| EXPRESSING INTERLEUKIN 12 (IL-12) | : | |

This decision is in response to applicant's submission filed via facsimile transmission in the United States Patent and Trademark Office (USPTO) on 03 February 2006, which has properly been treated as a petition under 37 CFR 1.181. No petition fee is required.

**BACKGROUND**

On 29 August 2003, applicant filed international application PCT/EP03/09591, which designated the United States and claimed a priority date of 13 September 2002. A copy of the international application was communicated to the United States Patent and Trademark Office from the International Bureau on 25 March 2004. The thirty-month period for paying the basic national fee in the United States expired at midnight on 14 March 2005 (13 March 2005 being a Sunday).

On 11 March 2005, applicant filed, *inter alia*, a submission for entry into the national stage in the United States which was accompanied by, *inter alia*, the U.S. Basic National Fee and an assertion of small entity status.

On 07 October 2005, the United States Designated/Elected Office (DO/EO/US) mailed a NOTIFICATION OF MISSING REQUIREMENTS UNDER 35 U.S.C. 371 (Form PCT/DO/EO/905) indicating, *inter alia*, that an oath or declaration in compliance with 37 CFR 1.497(a)-(b) and the surcharge under 37 CFR 1.492(e) for providing the oath or declaration later than thirty months from the priority date were required. The Notification set a two-month extendable period for reply.

On 03 February 2006, applicants filed the instant submission via facsimile transmission, which has been treated as a petition under 37 CFR 1.181. The petition was accompanied by, *inter alia*, a date-stamped postcard receipt and a copy of a declaration of the inventor.

## DISCUSSION

Applicant has provided sufficient evidence to establish that on 11 March 2005 applicant filed a declaration of the inventor. The proof is in the form of the copy of the receipt for the above-identified application which bears a USPTO date stamp of 11 March 2005 and which itemizes a "Combined Declaration & Power of Attorney" and identifies the above-captioned docket number and applicant. Further, practitioner states that the copy of the declaration filed 03 February 2006 is a copy of the declaration originally filed 11 March 2005. Therefore, in view of the date-stamped receipt and practitioner's statement, the declaration received on 03 February 2006 may properly be accepted as originally received in the USPTO on 11 March 2005. The NOTIFICATION OF MISSING REQUIREMENTS mailed 07 October 2005 is hereby vacated.

The declaration filed 11 March 2005 is in compliance with 37 CFR 1.497(a)-(b).

## CONCLUSION

The petition under 37 CFR 1.181 is **GRANTED** for the reasons set forth above.

The NOTIFICATION OF MISSING REQUIREMENTS mailed 07 October 2005 is **VACATED**.

This application is being forwarded to the National Stage Processing Branch of the Office of PCT Operations to continue national stage processing of the application in accordance with this decision.

Daniel Stemmer
Legal Examiner
PCT Legal Affairs
Office of Patent Cooperation Treaty
Legal Administration
Telephone: (571) 272-3301
Facsimile: (571) 273-0459

UNITED STATES PATENT AND TRADEMARK OFFICE

UNITED STATES DEPARTMENT OF COMMERCE
United States Patent and Trademark Office
Address: COMMISSIONER FOR PATENTS
P.O. Box 1450
Alexandria, Virginia 22313-1450
www.uspto.gov

| APPLICATION NO. | FILING DATE | FIRST NAMED INVENTOR | ATTORNEY DOCKET NO. | CONFIRMATION NO. |
|---|---|---|---|---|
| 10/527,703 | 10/13/2005 | Motoo Sumida | 47237-0528-00-US (216939) | 5291 |

55694 7590 03/22/2010
DRINKER BIDDLE & REATH (DC)
1500 K STREET, N.W.
SUITE 1100
WASHINGTON, DC 20005-1209

| EXAMINER |
|---|
| LILLING, HERBERT J |

| ART UNIT | PAPER NUMBER |
|---|---|
| 1657 | |

| MAIL DATE | DELIVERY MODE |
|---|---|
| 03/22/2010 | PAPER |

**Please find below and/or attached an Office communication concerning this application or proceeding.**

The time period for reply, if any, is set in the attached communication.

Commissioner for Patents
United States Patent and Trademark Office
P.O. Box 1450
Alexandria, VA 22313-1450
www.uspto.gov

MAR 22 2010

Brian K. Lathrop
DRINKER BIDDLE & REATH (DC)
1500 K STREET, N.W.
SUITE 1100
WASHINGTON DC 20005-1209

| | |
|---|---|
| In re Application of | : |
| Sumida et al. | : |
| Serial No.: 10/527,703 | :DECISION ON PETITION |
| Filed: 13 October 2005 | : |
| Attorney Docket No.: 47259-0528-00-US(216939) | : |

This letter is in response to the Petition under 37 C.F.R. 1.144 filed on 7 December 2009.

**BACKGROUND**

This application was filed as a national stage application in compliance with 35 USC 371 and as such is subject to PCT unity of invention rules.

The examiner mailed a lack of unity determination on 8 November 2007 which divided the original claims 1-30 into ten groups. An election of species was also required.

On 29 November 2007, the examiner sent applicants a miscellaneous communication which corrected typographical errors in the lack of unity determination.

On 2 May 2008, Applicants elected Group II, with traverse.

Applicants elect the following species ***with traverse***. For part A (product produced), Applicants elect (a) arachidonic acid), (b) omega 6 series PUFA: arachidonic acid, and (c) omega 9 series PUFA: MEAD acid) with traverse. For part B, Applicants elect palm oil with traverse. And for part C, Applicants elect the 1,3 position specific lipase produced by *Rhisopus Delmar*. Claims that read on the elected species are **claims 10-14**.

On 3 July 2008, the examiner sent applicants a notice of non-compliant response acknowledge the election of Group II, but still requiring an election of Species A.

On 4 August 2009, applicant elected with traverse for Species A:

> A transesterified triglyceride containing at least 20% arachidonic acid, obtained by the process according to claim 1, which contains at least 40% of triglycerides with one residue of arachidonic acid in the molecule and/or no more than 4.0% of a triglyceride with 3 residues of arachidonic acid in the molecule.
>
> Claims 10 and 14 read on the elected species.

On 5 June 2009, the examiner acknowledged the election of Group II, claims 10-16 and election of species which included Claims 10 and 14. The examiner considered the traversal and made the restriction requirement FINAL. Claims 1-9, 11-13, 15-30 were withdrawn from consideration as being directed to non-elected invention.

> Claims 10 and 14 were rejected under 35 USC 102(b) as being anticipated by five separate articles.
>
> Claims 10 and 14 were rejected under 35 USC 103(a) as being unpatentable over combinations of the five separate articles applied under 35 USC 102(b).

On 11 June 2009 and 20 July 2009, applicants filed two Information Disclosure Statements.

On 23 October 2009, the examiner prepared a telephonic interview summary indicating that the notice of non-compliant amendment dated 3 July 2008 has been vacated. The examiner indicated that an amended claim drawn only to t a product and not a product by process claim would initiate new issues. The examiner also indicated that an amended process claim would most likely be allowable over the prior art, and that the applicant would be allowed to change election prior to a final office action to expedite possible allowance, whereas the proposed amended product claim lacks an enabling disclosure to the structure of the claimed products.

On 7 December 2009, applicants filed a response to the Office action, an Information Disclosure Statement and this petition under consideration.

**DISCUSSION**

The petition and file history have been carefully considered.

This national stage filing is entitled to PCT Unity of Invention practice with regard to any restriction or election of species requirement. However, the examination of a national stage filing must comport with US practice per 35 USC 372(a),

> All questions of substance and, within the scope of the requirements of the treaty and Regulations, procedure in an international application designating the United States shall be determined as in the case of national applications regularly filed in the Patent and Trademark Office.

Before turning to the merits of the petition, one item is noted and hereby corrected in the prosecution history to help provide a clear record per by MPEP 814, which states:

> The examiner must provide a clear and detailed record of the restriction requirement to provide a clear demarcation between restricted inventions so that it can be determined whether inventions claimed in a continuing application are consonant with the restriction requirement and therefore subject to the prohibition against double patenting rejections under 35 U.S.C. 121. Geneva Pharms. Inc. v. GlaxoSmithKline PLC, 349 F.3d 1373, 1381, 68 USPQ2d 1865, 1871 (Fed. Cir. 2003). See also MPEP § 804.01.

The restriction requirement mailed 8 November 2007 indicated that process claim 22 would be examined with Group II. Because Claim 22 shares the same or corresponding technical feature with Claims 1-9 and 21, it should have been grouped with the process claims.

Turning now to the merits of the petition, applicants requests that

> (1) rejoinder of claim 11 for further examination on the merits with claim 14
> (2) re-organization of the Groups into Group I, Claims 1-9 and 21-23 and Group II, claims 11-16 and 27-30
> (3) revision of the PAIR entry to 3 July 2008 to reflect the vacated Notice of Non-Responsive Amendment
> (4) the Office provide full translations of the references relied upon for rejection under 35 USC 102 and 103.

**(1) Rejoinder of Claim 11 with Claim 14.**

Examined Claim 10 was drafted in product by process format. MPEP 2173/05(p) provides the following guidance on product by process claims:

> A product-by-process claim, which is a product claim that defines the claimed product in terms of the process by which it is made, is proper. In re Luck, 476 F.2d 650, 177 USPQ 523 (CCPA 1973); In re Pilkington, 411 F.2d 1345, 162 USPQ 145 (CCPA 1969); In re Steppan, 394 F.2d 1013, 156 USPQ 143 (CCPA 1967)....An applicant may present

claims of varying scope even if it is necessary to describe the claimed product in product-by-process terms. Ex parte Pantzer, 176 USPQ 141 (Bd. App. 1972).

In the interview summary dated 23 October 2009, instead of the substance of the claims, the examiner appears to be relying upon the format of withdrawn product claim 11 to maintain division from the examined product by process claim 10. The amendment dated 7 December 2009 cancelled claim 10 and re-wrote claim 11 in independent form.

Claim 11. (Withdrawn – Currently Amended): A transesterified oil/fat or triglyceride which is an oil/fat or triglyceride containing at least 20% of polyunsaturated fatty acids containing 20 or more carbons and two or more double bonds, ~~obtained by a production process according to claim 1,~~ and which contains at least 40% of triglycerides with one residue of a polyunsaturated fatty [[acids]] acid containing 20 or more carbons and two or more double bonds in the molecule, ~~and/or~~ and no more than 4.0% of triglycerides with 3 residues of the same polyunsaturated fatty [[acids]] acid containing 20 or more carbons and two or more double bonds.

Moreover, in the amendment filed 7 December 2009, elected and examined claim 14 has been made dependent upon generic claim 11.

Claim 14. (Currently Amended): [[A]] The transesterified oil/fat or triglyceride according to claim 11, containing at least 20% of arachidonic acid, ~~obtained by a production process according to claim 1,~~ and which contains at least 40% of triglycerides with one residue of arachidonic acid in the molecule ~~and/or~~ and no more than 4.0% of AAA, wherein AAA is a triglyceride with 3 residues of arachidonic acid in the molecule.

The examiner has required an election of species amongst the types of PUFA in claims 12, 13, 14, 15, and 16. In the latest amendment, claims 12-16 dependent directly upon claim 11. As such, amended claim 11 can now be considered a linking claim, which encompasses and links the species of claims 12-16. MPEP 809 requires that generic claims must be examined with the elected invention/species. See final emphasized sentence below:

> The most common types of linking claims which, if allowable, act to prevent restriction between inventions that can otherwise be shown to be divisible, are
> (A) genus claims linking species claims; and
> (B) subcombination claims linking plural combinations.
> Where an application includes claims to distinct inventions as well as linking claims, restriction can nevertheless be required.

*The linking claims must be examined with, and thus are considered part of, the invention elected.*

For these reasons, generic claim 11 and elected species claim 14 will be examined together.

**(2) Re-organization of the Groups.**

Applicants request that Groups I-X be re-organized into two groups as follows:

Group I, Claims 1-9 and 21-23, drawn to the processes
Group II, claims 11-16 and 27-30, drawn to the product.

Upon review of the originally filed claims, Claims 10-16, which are written in product by process fashion, were placed in separate groups from the product claims 17-26. This is incorrect. A product defined by the process by which it can be made is still a product claim (In re Bridgeford, 357 F.2d 679, 149 USPQ 55 (CCPA 1966)). For this reason, in the original unity of invention determination, claims 10-16 and 17-26 should have been grouped together as sharing the same or corresponding technical feature of trans-esterified oil/fat or triglycerides. (Claims 17-20 are cancelled in the latest amendment.)

Applicants elected the product trans-esterified oil/fat or triglycerides and species of arachidonic acid. A complete Office action on the merits would have then addressed claims 10, 11, 14 and 18, all of which are limited to or encompass trans-esterified oil/fat or triglycerides containing arachidonic acid. Compare examined claim 14 with withdrawn claim 18 below. Because the Office only addressed claims 10 and 14 on the merits in the first Office action, it is considered incomplete for not addressing claims 11 and 18.

**14. (Currently Amended) A transesterified oil/fat or triglyceride containing at least 20% of arachidonic acid, obtained by a production process according to claim 1, ~~any one of claims 1 to 9,~~ and which contains at least 40% of triglycerides with one residue of arachidonic acid in the molecule and/or no more than 4.0% of AAA, wherein AAA is [[(]] a triglyceride with 3 residues of arachidonic acid in the molecule[[)]].**

**18. (Original) An oil/fat or triglyceride containing at least 20% of arachidonic acid, and which contains at least 40% of triglycerides with one residue of arachidonic acid in the molecule and/or no more than 4.0% of AAA.**

Claims 27-30 are directed to nutritive and food compositions comprising the trans-esterified oil/fat or triglycerides. Because these product claims require the same or corresponding technical feature as their dependent claims 10-26, they should be grouped together. This would be consistent with Example 13 in Chapter 10 of the International Search and Examination Guidelines which states:

> "Claim 1: Filament A for a lamp.
>
> Claim 2: Lamp B having filament A.
>
> Claim 3: Searchlight provided with lamp B having filament A and a swivel arrangement C.
>
> Unity exists between claims 1, 2, and 3. The special technical feature common to all the claims is the filament A."

For these reasons, the product claims are grouped together as Group II and the process claims are grouped together as Group I. The lack of unity determination between the Group II product and Group I process inventions is contingent upon the prior art teaching the same or corresponding technical feature of the product. See also MPEP 1893.05(d) which states in part:

> If an examiner (1) determines that the claims lack unity of invention and (2) requires election of a single invention, when all of the claims drawn to the elected invention are allowable (i.e., meet the requirements of 35 U.S.C. 101, 102, 103 and 112), the nonelected invention(s) should be considered for rejoinder. Any nonelected product claim that requires all the limitations of an allowable product claim, and any nonelected process claim that requires all the limitations of an allowable process claim, should be rejoined. See MPEP § 821.04. Any nonelected processes of making and/or using an allowable product should be considered for rejoinder. The examiner should notify applicants of potential rejoinder of non-elected process claims by placing form paragraph 8.21.04 at the end of any lack of unity determination made between a product and a process of making the product or between a product and a process of using the product.

**(3) Revision of the PAIR entry to 3 July 2008**

Applicants' request that the PAIR entry for 3 July 2008 be corrected to reflect the vacated Notice of Non-Responsive Amendment has been forwarded to the technical support staff.

**(4) Request for Full translations of the references.**

Full machine-generated translations of the three references were scanned into the file on 20 January 2010.

**DECISION**

The petition is **GRANTED** for the reasons set forth above.

The restriction requirement between Groups I-X has been re-organized into two groups as follows:

Group I, Claims 1-9 and 21-23, drawn to the processes
Group II, claims 11-16 and 27-30, drawn to the product.

The election of species made between types of PUFAs recited in dependent claims 12-16 has been maintained, pending allowability of the independent generic claim. Claims 11, 14, 27-30 are under examination because they either recite or encompass the elected species.

The lack of unity determination between the elected product Group II and the non-elected process of Group I may be maintained as long as the technical feature of the product does not make a contribution over the prior art. Should the elected product be found free of the prior art, unity of invention should be reconsidered and non-elected process claims rejoined. See MPEP 1893.05(d) and 821.04(b).

The Office action mailed 5 June 2009 has been withdrawn as incomplete for not having addressed claims 11 and 18.

**The application will be forwarded to the examiner for consideration of the Information Disclosure Statements, the papers filed 7 December 2009 and for preparation of an Office action consistent with this decision. Should the generic claims become allowable, the examiner should withdraw the election of species per MPEP 809 and MPEP 821.04(a). Should the elected product claims become allowable, the examiner should follow rejoinder practice in MPEP 821.04(b).**

Should there be any questions about this decision, please contact Quality Assurance Specialist Julie Burke, by letter addressed to Director, Technology Center 1600, at the address listed above, or by telephone at 571-272-0512 or by facsimile sent to the general Office facsimile number, 571-273-8300.

Remy Yucel
Director, Technology Center 1600

20 MAR 2006

#6

UNITED STATES PATENT AND TRADEMARK OFFICE

Commissioner for Patents
United States Patent and Trademark Office
P.O. Box 1450
Alexandria, VA 22313-1450
www.uspto.gov

Kathleen Tyrrell
LICATA & TYRRELL
66 East Main Street
Marlton, NJ 08053

In re Application of
ITO, Takeshi et al.
Application No.: 10/527,710
PCT No.: PCT/JP03/11689
Int. Filing Date: 12 September 2003
Priority Date: 13 September 2002
Attorney's Docket No.: KUZ-0022
For: ADHESIVE PATCH

DECISION

This is a decision regarding applicants' response to Notification of Missing Requirements, filed 30 August 2005.

## BACKGROUND

On 12 September 2003, applicants filed international application PCT/JP03/11689, claiming a priority date of 13 September 2002. On 25 March 2004, a copy of the international application was transmitted to the Office by the International Bureau. The deadline for entry into the national stage in the United States was midnight 13 March 2005.

On 11 March 2005, applicants filed a submission for entry into the national stage in the United States which was accompanied by the basic national fee.

On 22 April 2005, applicants filed a declaration naming the first named inventor as Takeshi Ito.

On 04 August 2005, the Office mailed a Notification of Missing Requirements (Form PCT/DO/EO/905) indicating, *inter alia*, that an oath or declaration in compliance with 37 CFR 1.497(a)-(b) was required. It further indicated that the first named inventor on the declaration was Takeshi Ito, but the first named inventor on the international application was Ken Ito and a recording of a change was not present in the file.

On 30 August 2005, applicants filed a response indicating that the had filed a request for a recording of a change with WIPO.

## DISCUSSION

Under 37 CFR 1.41(a)(4), the inventorship of the international application entering the national stage under 35 U.S.C. 371 is that inventorship set forth in the international application, which includes any change effected under PCT Rule 92bis.

The record does not reflect any such changes under Rule 92*bis* during the international stage. A request for a recording of a change is not sufficient.

Applicants are required to submit an oath or declaration in compliance with 37 CFR 1.497(a)-(b). Attention is directed to MPEP §605.04(c) and the requirement for a petition under 37 CFR 1.182 contained therein, if there has been a change of name. If applicants' 92*bis* request has been granted, applicants can forward the Form PCT/IB/306 indicating the recording of a change.

## CONCLUSION

A proper response as indicated above must be filed within TWO (2) MONTHS from the mail date of this decision. Failure to timely file the proper response will result in abandonment of this application. Extensions of time are available under 37 CFR 1.136(a).

Any further correspondence with respect to this matter should be addressed to the Mail Stop PCT, Commissioner for Patents, Office of PCT Legal Administration, P.O. Box 1450, Alexandria, Virginia 22313-1450, with the contents of the letter marked to the attention of the Office of PCT Legal Administration.

Erin P. Thomson

Erin P. Thomson
Attorney Advisor
PCT Legal Administration

Telephone: 571-272-3292
Facsimile: 571-273-0459

#8

UNITED STATES PATENT AND TRADEMARK OFFICE

Commissioner for Patents
United States Patent and Trademark Office
P.O. Box 1450
Alexandria, VA 22313-1450
www.uspto.gov

25 SEP 2006

Kathleen Tyrrell
LICATA & TYRRELL
66 East Main Street
Marlton, NJ 08053

| | | |
|---|---|---|
| In re Application of | : | |
| ITO, Takeshi et al. | : | |
| Application No.: 10/527,710 | : | |
| PCT No.: PCT/JP03/11689 | : | |
| Int. Filing Date: 12 September 2003 | : | DECISION |
| Priority Date: 13 September 2002 | : | |
| Attorney's Docket No.: KUZ-0022 | : | |
| For: ADHESIVE PATCH | : | |

This is a decision regarding applicants' submission of a recording of a change on 12 May 2006.

## BACKGROUND

On 20 March 2006, the Office mailed Decision, indicating that the declaration and request for a recording of a change were not sufficient. A recording of a change (Form PCT/IB/306) or a petition to correct the inventor's name was required.

On 12 May 2006, applicant supplied the recording of a change form from the International Bureau.

## DISCUSSION

Under 37 CFR 1.41(a)(4), the inventorship of the international application entering the national stage under 35 U.S.C. 371 is that inventorship set forth in the international application, which includes any change effected under PCT Rule 92bis.

Applicant has supplied the recording of a change under PCT Rule 92*bis*, indicating that inventor Ken Ito's name has been changed to Takeshi Ito.

## CONCLUSION

The declaration supplied on 22 April 2005 complies with 37 CFR 1.497(a)-(b).

This application is being forwarded to the National Stage Processing Division of PCT Operations for further action consistent with this decision. The application has a 35 U.S.C. 371(c)(1), (c)(2) and (c)(4) date of 22 April 2005.

Erin P. Thomson

Erin P. Thomson
Attorney Advisor
PCT Legal Administration

Telephone: 571-272-3292
Facsimile: 571-273-0459

UNITED STATES PATENT AND TRADEMARK OFFICE

Commissioner for Patents
United States Patent and Trademark Office
P.O. Box 1450
Alexandria, VA 22313-1450
www.uspto.gov

**MORRISON & FOERSTER LLP**
**1650 TYSONS BOULEVARD, SUITE 400**
**MCLEAN, CA 22102**

**COPY MAILED**

JAN 2 2 2008

**OFFICE OF PETITIONS**

In re Application of :
**GIERSCHIK**, et al. :
Application No. 10/527,714 : DECISION ON PETITION
Filed: January 6, 2006 : TO WITHDRAW
Attorney Docket No. **449122080300** : FROM RECORD
:

This is a decision on the Request to Withdraw as attorney or agent of record under 37 C.F.R. § 1.36(b), filed May 25, 2007.

The request is **NOT APPROVED** as moot.

A review of the file record indicates that the power of attorney to **MORRISON & FOERSTER LLP** has been revoked by the assignee of the patent application on August 3, 2007. Accordingly, the request to withdraw under 37 C.F.R. § 1.36(b) is moot.

All future communications from the Office will continue to be directed to the below-listed address until otherwise notified by applicant.

Telephone inquires concerning this decision should be directed to the undersigned at 571-272-7253.

Monica A. Graves
Petitions Examiner
Office of Petitions

cc: **BELL BOYD & LLOYD, LLP**
**P.O. BOX 1135**
**CHICAGO, IL 60690**

UNITED STATES PATENT AND TRADEMARK OFFICE

COMMISSIONER FOR PATENTS
UNITED STATES PATENT AND TRADEMARK OFFICE
P.O. BOX 1450
ALEXANDRIA, VA 22313-1450
www.uspto.gov

JACKSON WALKER LLP
901 MAIN STREET
SUITE 6000
DALLAS TX 75202-3797

COPY MAILED

DEC 10 2007

OFFICE OF PETITIONS

In re Application of
Shaw, et al.
Application No. 10/527,725
Filed: March 14, 2005
Docket No.: 218601.00007
(TXTECH-0001

DECISION ON PETITION

This is a decision on the petition filed under 37 CFR 1.182 on October 17, 2007. This matter is being properly treated under 37 CFR 1.181 as a petition to withdraw the holding of abandonment.

This application was held abandoned April 6, 2007 for failure to timely submit a proper reply to the final Office action mailed March 5, 2007. Notice of Abandonment was mailed September 19, 2007.

Petitioners assert that a response to the non-final Office action was timely submitted on April 4, 2007 and have provided as proof of mailing and proof of USPTO receipt a return postcard dated April 10, 2007 acknowledging receipt of the reply. Further, the copy of the reply submitted herewith bears a certificate of mailing date of April 4, 2007 in accordance with 37 CFR 1.8.

The original response filed April 10, 2007 has not been located in the application file. However, the arguments and evidence submitted are found convincing.

In view of the evidence thereof, the petition to withdraw the holding of abandonment is hereby **GRANTED**.

The Notice of Abandonment is hereby **VACATED** and the holding of abandonment is **WITHDRAWN**.

The application file is being forwarded to the Technology Center 1600 for further processing.

Telephone inquiries concerning this matter may be directed to the undersigned at (571) 272-3205.

Alesia M. Brown
Petitions Attorney
Office of Petitions

#10

UNITED STATES PATENT AND TRADEMARK OFFICE

COMMISSIONER FOR PATENTS
UNITED STATES PATENT AND TRADEMARK OFFICE
P.O. BOX 1450
ALEXANDRIA, VA 22313-1450
www.uspto.gov

04 JUL 2006

GREENBERG TRAURIG LLP
2450 COLORADO AVENUE, SUITE 400E
SANTA MONICA, CA 90404

| | | |
|---|---|---|
| In re Application of OHTA et al | : | |
| U.S. Application No.: 10/527,728 | : | |
| PCT Application No.: PCT/JP03/11586 | : | |
| Int. Filing Date: 10 September 2003 | : | DECISION |
| Priority Date Claimed: 13 September 2002 | : | |
| Attorney Docket No.: 74606-010100 | : | |
| For: IMPACT ABSORBING MECHANISM OF WALKING ROBOT | : | |

This is in response to applicant's "Petition Under 37 C.F.R. § 1.182" filed 24 April 2006.

## BACKGROUND

On 10 September 2003, applicant filed international application PCT/JP03/11586, which claimed priority of an earlier Japan application filed 13 September 2002. A copy of the international application was communicated to the USPTO from the International Bureau on 25 March 2004. The thirty-month period for paying the basic national fee in the United States expired on 14 March 2005 (13 March 2005 was a Sunday).

On 14 March 2005, applicant filed national stage papers in the United States Designated/Elected Office (DO/EO/US). The submission was accompanied by, *inter alia*, the basic national fee required by 35 U.S.C. 371(c)(1).

On 22 August 2005, the DO/EO/US mailed a Notification of Missing Requirements Under 35 U.S.C. 371 (Form PCT/DO/EO/905), which indicated that an oath or declaration in compliance with 37 CFR 1.497 must be filed.

On 20 October 2005, applicant filed an executed declaration.

On 31 January 2006, the DO/EO/US mailed a Notification of Defective Response (Form PCT/DO/EO/916), which identified a discrepancy in the name of the first inventor.

On 09 February 2006, applicant filed a response.

On 28 February 2006, this Office mailed a communication which identified discrepancies with respect to the names of two of the inventors.

On 24 April 2006, applicant filed the present petition under 37 CFR 1.182.

## DISCUSSION

A review of the application file reveals that the given name of the first inventor is listed in the international application as "Naruhiko" while the given name is listed in the declaration as "Shigehiko". Furthermore, the given name of the third inventor is listed in the international application as "Takamasa" while the given name is listed in the declaration as "Takakatsu". The present petition is accompanied by the requisite petition fee of $400.00 as well as the requisite statements setting forth the specific circumstances as to how and when the error was made and discovered and that the mistake was an inadvertent error without deceptive intent.

## CONCLUSION

For the reasons above, the petition under 37 CFR 1.182 is GRANTED.

The application has an International Filing Date under 35 U.S.C. 363 of 10 September 2003, and a date under 35 U.S.C. 371(c)(1), (c)(2), and (c)(4) of 20 October 2005.

This application is being forwarded to the United States Designated/Elected Office (DO/EO/US) for further processing in accordance with this decision.

Bryan Tung
PCT Legal Examiner
PCT Legal Office

Telephone: 571-272-3303
Facsimile: 571-273-0459

24 OCT 2005

#5

UNITED STATES PATENT AND TRADEMARK OFFICE

Commissioner for Patents
United States Patent and Trademark Office
P.O. Box 1450
Alexandria, VA 22313-1450
www.uspto.gov

Michael J. Bujold
DAVIS & BUJOLD PLLC
Fourth Floor
500 North Commercial Street
Manchester, NH 03101-1151

| | |
|---|---|
| In re Application of:<br>ECKERT, Harold, et al.<br>U.S. Application No.: 10/527,734<br>PCT No.: PCT/EP2003/009648<br>International Filing Date: 30 August 2003<br>Priority Date: 05 September 2002<br>Attorney's Docket No.: ZAHFRI P739US<br>For: ELECTROMAGNETIC SELECTION DEVICE FOR A TWO-STAGE PLANETARY GEAR SET | DECISION ON PETITION FOR REVIVAL OF ABANDONED APPLICATION UNDER 37 CFR 1.137(b) |

The petition for revival under 37 CFR 1.137(b) filed 14 March 2005 in the above-captioned application is hereby **GRANTED** as follows:

Applicant's statement that "the entire delay in filing the required reply from the due date for the required reply until the filing of a grantable petition under 37 CFR 1.137(b) was unintentional" satisfies the requirements of 37 CFR 1.137(b)(3). Applicant has now submitted the basic national fee and the requirements of 37 CFR 1.137(b) have been satisfied. Therefore, the request to revive the application is granted as to the national stage in the United States.

Applicants' 14 March 2005 submission included an executed declaration in compliance with 37 CFR 1.497.

On 03 May 2005, applicants submitted an English translation of the international application.

This application is being returned to the National Stage Processing Division of the Office of PCT Operations for further processing in accordance with this decision. The date under 35 U.S.C. 371(c)(1), (c)(2), and (c)(4) is 03 May 2005.

Richard M. Ross
PCT Petitions Attorney
Office Of PCT Legal Administration
Telephone: (571) 272-3296
Facsimile: (571) 273-0459

UNITED STATES PATENT AND TRADEMARK OFFICE

Commissioner for Patents
United States Patent and Trademark Office
P.O. Box 1450
Alexandria, VA 22313-1450
www.uspto.gov

DAVID SMALL
LOCATA CORPORATION
9 ISLAND VIEW
IRVINE CA 92604

COPY MAILED
SEP 02 2008

| | | |
|---|---|---|
| In re Application of | : | |
| Small | : | |
| Application No. 10/527,747 | : | DECISION |
| Filed: 14 March, 2005 | : | |
| Attorney Docket No. (None) | : | |

This is a decision on the petition, filed on 17 December, 2007, for revival of an application abandoned due to unavoidable delay under 37 C.F.R. §1.137(a).[1]

> **NOTE**: The instant petition appears to have been submitted by one who is not registered to practice before the Office and who is not the named inventor. Applicant's attention is drawn to 35 U.S.C. §2(b)(2)(D) and 35 U.S.C. §33. Applicant's attention is further drawn to the provisions of 37 C.F.R. §1.31 and §1.32.

The petition under 37 C.F.R. §1.137(a) is **DISMISSED**.

Any further petition to revive must be submitted within TWO (2) MONTHS from the mail date of this decision. Extensions of time under 37 C.F.R. §1.136(a) are permitted. The reconsideration request should include a cover letter entitled "Renewed Petition under 37 C.F.R. §1.137(a)."

This is **not** a final agency action within the meaning of 5 U.S.C.§704.

[1] A review of the extensive discussion at/in the guidance set forth in the commentary at MPEP §711.03(c)(I)(A) and (B) might suggest that the factual averments set forth in the instant petition may be appropriate for a petition (no fee) to withdraw the holding of abandonment and consideration under 37 C.F.R. §1.181. However, Applicant's failure to seek relief timely under the rule (within two (2) months of the action complained of (Notice of Abandonment) leaves Applicant with a petition to revive under the provisions of 37 C.F.R. §1.137(a) or (b) as the proper route to obtain a return to pending status for the instant application.

As to Allegations of
Unavoidable Delay

The requirements of a grantable petition pursuant to 37 C.F.R. §1.137(a) are the petition and fee therefor, a reply, a proper showing of unavoidable delay under the regulation, and, where applicable, a terminal disclaimer and fee. (However, it does not appear that a terminal disclaimer and fee are due here.)

Applicant does not appear to satisfy (with the necessary documentary support under the rule) the showing requirements as to unavoidable delay. Applicant will need to provide a copy of the docket record (or file jacket cover detailing transactions) with an averment of search and failure to find, along with a copy of the due-date calendar for the date on which the timely reply was due for the Office action in question.

It is noted, however, that of the three mailings—the 19 October, 2006, Office action, the 31 October, 2006, non-final Office action, and the 31 May, 2007, Notice of Abandonment—to Applicant at the address set forth above, Applicant's petition and the statement of John Sanderson MD (identified as the "householder at 9 Island View, Irvine, CA 92604) avers that John Sanderson MD "never received an Office action" and the petition avers that this pattern of non-receipt includes the Notice of Abandonment (Petition, page 1, fourth paragraph.). Applicant's continued reliance upon this address for Office correspondence might be found not to be reasonable in light of the Applicant's stated history of non-delivery/non-receipt.

## BACKGROUND

The record reflects as follows:

Applicant failed to reply timely and properly to the non-final Office action mailed on 31 October, 2006, with reply due absent extension of time on or before 31 January, 2007.

The application went abandoned after midnight 31 January, 2007

The Office mailed the Notice of Abandonment on 31 May, 2007.

On 17 December, 2007, Applicant filed the instant petition with fee, a reply in the form of an amendment, and a statement that he did not receive the non-final Office action or the Notice of Abandonment, and a statement of John Sanderson MD (identified as the "householder at 9 Island View, Irvine, CA 92604) avers that John Sanderson MD "never received an Office action" and the petition avers that this pattern of non-receipt includes the Notice of Abandonment (Petition, page 1, fourth paragraph.).

Applicant provided no documentation as the requisite support of the averment, as outlined in the discussion at commentary at MPEP §711.03(c), of a petition averring unavoidable delay.

Out of an abundance of caution, Applicants always are reminded that those registered to practice and all others who make representations before the Office are reminded to inquire into the underlying facts of representations made to the Office and support averments with the appropriate documentation–since all owe to the Office the continuing duty to disclose.[2]

The availability of applications and application papers online to applicants/practitioners who diligently associate their Customer Number with the respective application(s) now provides an applicant/practitioner on-demand information as to events/transactions in an application.

As to Allegations of
Unavoidable Delay

The requirements under 37 C.F.R. §1.137(a) have not been satisfied as of this writing in that Applicant failed to make the showing required.

## CONCLUSION

Accordingly, The petition under 37 C.F.R. §1.137(a) is **dismissed**.

## ALTERNATIVE VENUE

Alternatively, Applicant may file a petition under 37 C.F.R. §1.137(b) and aver unintentional delay. (See:
http://www.uspto.gov/web/offices/pac/mpep/documents/0700_711_03_c.htm#sect711.03c )

A petition to revive on the grounds of unintentional delay must be filed promptly and such petition must be accompanied by the reply, the petition fee, a terminal disclaimer and fee where appropriate and a statement that "the entire delay in filing the required reply from the due date for the reply until the filing of a grantable petition was unintentional." (The statement is in the form available online.)

Further correspondence with respect to this matter should be addressed as follows:

---

[2] See supplement of 17 June, 1999. The Patent and Trademark Office is relying on Applicant's duty of candor and good faith and accepting a statement made by Applicant. See Changes to Patent Practice and Procedure, 62 Fed. Reg. at 53160 and 53178, 1203 Off. Gaz. Pat. Office at 88 and 103 (responses to comments 64 and 109)(applicant obligated under 37 C.F.R. §10.18 to inquire into the underlying facts and circumstances when providing statements to the Patent and Trademark Office).

By Mail: Mail Stop PETITION
Commissioner for Patents
P. O. Box 1450
Alexandria, VA 22313-1450

By hand: U. S. Patent and Trademark Office
Customer Service Window, Mail Stop Petitions
Randolph Building
401 Dulany Street
Alexandria, VA 22314

By facsimile: **(571) 273-8300**
Attn: Office of Petitions

While telephone inquiries regarding this decision may be directed to the undersigned at (571) 272-3214, it is noted that all practice before the Office is in writing (see: 37 C.F.R. §1.2[3]) and the proper authority for action on any matter in this regard are the statutes (35 U.S.C.), regulations (37 C.F.R.) and the commentary on policy (MPEP). Therefore, no telephone discussion may be controlling or considered authority for Applicant's action(s).

/John J. Gillon, Jr./
John J. Gillon, Jr.
Senior Attorney
Office of Petitions

[3] The regulations at 37 C.F.R. §1.2 provide:
**§1.2 Business to be transacted in writing.**
All business with the Patent and Trademark Office should be transacted in writing. The personal attendance of applicants or their attorneys or agents at the Patent and Trademark Office is unnecessary. The action of the Patent and Trademark Office will be based exclusively on the written record in the Office. No attention will be paid to any alleged oral promise, stipulation, or understanding in relation to which there is disagreement or doubt.

UNITED STATES PATENT AND TRADEMARK OFFICE

Commissioner for Patents
United States Patent and Trademark Office
P.O. Box 1450
Alexandria, VA 22313-1450
www.uspto.gov

DAVID SMALL
LOCATA CORPORATION
9 ISLAND VIEW
IRVINE CA 92604

MAILED

FEB 27 2009

OFFICE OF PETITIONS

| | | |
|---|---|---|
| In re Application of | : | |
| Small | : | |
| Application No. 10/527,747 | : | DECISION |
| Filed: 14 March, 2005 | : | |
| Attorney Docket No. (None) | : | |

This is a decision on the petition filed on 3 November, 2008, to revive an application under 37 C.F.R. §1.137(b) as having been abandoned due to unintentional delay.

> ***NOTE:*** *There is no indication that Petitioner herein was ever empowered to prosecute the instant application. If Petitioner desires to receive future correspondence regarding this application, the appropriate power of attorney documentation must be submitted. A courtesy copy of this decision will be mailed to Petitioner. However, all future correspondence will be directed to the address of record until such time as appropriate instructions are received to the contrary.*

The petition as considered under 37 C.F.R. §1.137(b) is **GRANTED**.

As to Allegations of
Unintentional Delay

The requirements of a grantable petition pursuant to 37 C.F.R. §1.137(b) are the petition and fee therefor, a reply, a proper statement of unintentional delay under the regulation, and, where applicable, a terminal disclaimer and fee. (However, it does not appear that a terminal disclaimer and fee are due here.)

## BACKGROUND

The record reflects as follows:

Applicant failed to reply timely and properly to the non-final Office action mailed on 31 October, 2006, with reply due absent extension of time on or before 31 January, 2007.

The application went abandoned after midnight 31 January, 2007

The Office mailed the Notice of Abandonment on 31 May, 2007.

On 17 December, 2007, Applicant filed a petition pursuant to 37 C.F.R. §1.137(a), averring unavoidable delay, with fee, a reply in the form of an amendment, and a statement that he did not receive the non-final Office action or the Notice of Abandonment, and a statement of John Sanderson MD (identified as the "householder at 9 Island View, Irvine, CA 92604) averred that John Sanderson MD "never received an Office action" and the petition avers that this pattern of non-receipt includes the Notice of Abandonment (Petition, page 1, fourth paragraph.). Applicant did not appear to satisfy (with the necessary documentary support under the rule) the showing requirements as to unavoidable delay (e.g., a copy of the docket record or file jacket cover detailing transactions) with an averment of search and failure to find, along with a copy of the due-date calendar for the date on which the timely reply was due for the Office action in question. Of the three mailings—the 19 October, 2006, Office action, the 31 October, 2006, non-final Office action, and the 31 May, 2007, Notice of Abandonment—to Applicant at the address set forth above, Applicant's petition and the statement of John Sanderson MD (identified as the "householder at 9 Island View, Irvine, CA 92604) avers that John Sanderson MD "never received an Office action" and the petition averred that this pattern of non-receipt included the Notice of Abandonment (Petition, page 1, fourth paragraph.). Applicant's continued reliance upon this address for Office correspondence might be found not to be reasonable in light of the Applicant's stated history of non-delivery/non-receipt. Applicant provided no documentation as the requisite support of the averment (pursuant to 37 C.F.R. §1.137(a) or 37 C.F.R. §1.181), as outlined in the discussion at commentary at MPEP §711.03(c), of a petition averring unavoidable delay. The petition was dismissed on 2 September, 2008, for failure to satisfy the showings under the rule.

Petitioner filed on 3 November, 2008, a petition pursuant to 37 C.F.R. §1.137(b), averring unintentional delay, with fee, a reply in the form of an amendment, and made a statement of unintentional delay.

*It is noted that it is not apparent whether the person signing the statement of unintentional delay was in a position to have firsthand or direct knowledge of the facts and circumstances of the delay at issue. As a result, the Office may treat such a statement as having been made as the result of a reasonable inquiry into the facts and circumstances of such delay.*[1] *In the event that such an inquiry has not been made, a Petitioner* ***must*** *make such an inquiry—and if such inquiry results in the discovery that it is not correct that the entire delay in filing the required reply from the due date for the reply until the filing of a grantable petition pursuant to 37 C.F.R. §1.137(b) was unintentional, a Petitioner* ***must*** *notify the Office.*

---

[1] See 37 C.F.R. §10.18(b) and Changes to Patent Practice and Procedure; Final Rule Notice, 62 Fed. Reg. 53131, 53178 (October 10, 1997), 1203 Off. Gaz. Pat. Office 63, 103 (October 21, 1997).

The availability of applications and application papers online to applicants/practitioners who diligently associate their Customer Number with the respective application(s) now provides an applicant/practitioner on-demand information as to events/transactions in an application.

Out of an abundance of caution, Petitioners always are reminded that those registered to practice and all others who make representations before the Office are reminded to inquire into the underlying facts of representations made to the Office and support averments with the appropriate documentation–since all owe to the Office the continuing duty to disclose.[2]

## STATUTES, REGULATIONS AND ANALYSIS

Congress has authorized the Commissioner to "revive an application if the delay is shown to the satisfaction of the Commissioner to have been "unavoidable." 35 U.S.C. §133 (1994).[3]
The regulations at 37 C.F.R. §1.137(a) and (b) set forth the requirements for a Petitioner to revive a previously unavoidably or unintentionally, respectively, abandoned application under this congressional grant of authority.

Unintentional delays are those that do not satisfy the very strict statutory and regulatory requirements of unavoidable delay, and also, by definition, are not intentional.[4]))

### As to Allegations of Unintentional Delay

It appears that the requirements under 37 C.F.R. §1.137(b) have been satisfied.

## CONCLUSION

Accordingly, The petition under 37 C.F.R. §1.137(b) is **granted**.

The instant application is released to Technology Center/AU 3662 for further processing in due course.

---

[2] See supplement of 17 June, 1999. The Patent and Trademark Office is relying on petitioner's duty of candor and good faith and accepting a statement made by Petitioner. See Changes to Patent Practice and Procedure, 62 Fed. Reg. at 53160 and 53178, 1203 Off. Gaz. Pat. Office at 88 and 103 (responses to comments 64 and 109)(applicant obligated under 37 C.F.R. §10.18 to inquire into the underlying facts and circumstances when providing statements to the Patent and Trademark Office).

[3] 35 U.S.C. §133 provides:
**35 U.S.C. §133 Time for prosecuting application.**
Upon failure of the applicant to prosecute the application within six months after any action therein, of which notice has been given or mailed to the applicant, or within such shorter time, not less than thirty days, as fixed by the Commissioner in such action, the application shall be regarded as abandoned by the parties thereto, unless it be shown to the satisfaction of the Commissioner that such delay was unavoidable.

[4] Therefore, by example, an unintentional delay in the reply might occur if the reply and transmittal form are to be prepared for shipment by the US Postal Service, but other pressing matters distract one's attention and the mail is not timely deposited for shipment.

Petitioner may find it beneficial to view Private PAIR within a fortnight of the instant decision to ensure that the revival has been acknowledged by the TC/AU in response to this decision. It is noted that all inquiries with regard to that change in status need be directed to the TC/AU where that change of status must be effected—that does not occur in the Office of Petitions.

Telephone inquiries regarding this decision may be directed to the undersigned at (571) 272-3214—it is noted, however, that all practice before the Office is in writing (see: 37 C.F.R. §1.2[5]) and the proper authority for action on any matter in this regard are the statutes (35 U.S.C.), regulations (37 C.F.R.) and the commentary on policy (MPEP). Therefore, no telephone discussion may be controlling or considered authority for Petitioner's action(s).

/John J. Gillon, Jr./
John J. Gillon, Jr.
Senior Attorney
Office of Petitions

cc:
SCOTT A FELDER
WILEY REIN LLP
ATTN PATENT ADMINISTRATION
1776 K STREET NW
WASHINGTON, DC 20006

[5] The regulations at 37 C.F.R. §1.2 provide:
**§1.2 Business to be transacted in writing.**
All business with the Patent and Trademark Office should be transacted in writing. The personal attendance of applicants or their attorneys or agents at the Patent and Trademark Office is unnecessary. The action of the Patent and Trademark Office will be based exclusively on the written record in the Office. No attention will be paid to any alleged oral promise, stipulation, or understanding in relation to which there is disagreement or doubt.

28 FEB 200

UNITED STATES PATENT AND TRADEMARK OFFICE

Commissioner for Patents
United States Patent and Trademark Office
P.O. Box 1450
Alexandria, VA 22313-1450
www.uspto.gov

VENABLE LLP
P.O. BOX 34385
WASHINGTON DC 20045-9998

| | |
|---|---|
| In re Application of<br>ÄNGQUIST et al.<br>Application No.: 10/527,753<br>PCT No.: PCT/SE02/01664<br>Int. Filing Date: 13 September 2002<br>Priority Date: None<br>Attorney Docket No.: 43315-214728<br>For: WIND POWER FED NETWORK | DECISION ON PETITION<br><br>UNDER 37 CFR 1.497 |

This is a decision on applicants' "Petition to Correct Inventorship", filed on 28 September 2005 in the United States Patent and Trademark Office (USPTO). Petitioner, in effect, seeks to add Willie Wong as an inventor in the above referenced application.

## BACKGROUND

On 14 September 2005, a Notification of Missing Requirements was mailed to applicant indicating that the oath or declaration in accordance with 37 CFR 1.497(a) and (b) was required.

On 28 September 2005, applicant filed a Response to the Notification of Missing Requirements, along with Combined Declaration and Power of Attorney executed by applicant/inventors identified in the published International application and identifying Willie Wong, as a co-inventor. Applicant also filed a petition to correct inventorship under 37 CFR 1.497(d) requesting the addition of applicant/inventor Willie Wong. Applicant submitted a copy of Notification of the Recording of a Change (Form PCT/IB/306) pursuant to PCT Rule 92*bis*[1].

## DISCUSSION

On 04 April 2005, the International Bureau issued a Notification of the Recording of A Change (Form PCT/IB/306) confirming that Willie Wong was added to the international application under PCT Rule 92*bis* as applicants/inventors for the United States only.

Since the correction was accepted by the International Bureau under PCT Rule 92*bis* and a copy of the Notification of the Recording of a Change (Form PCT/IB/306) was provided to the

---

[1] PCT Rule 92*bis*(a) states that the International Bureau shall, on the request of the applicant or receiving Office, record changes ...in the person, name, residence, nationality or address of the applicant. Here, the USPTO was not the receiving Office and thus, could not request the recording of a change in inventorship.

United States Receiving Office (RO/US), the addition of Willie Wong as applicant/inventor for the US only, is accepted.

## CONCLUSION

In light of the issuance of the Form PCT/IB/306 adding Willie Wong as applicant/inventor for the US only, the declaration executed by joint inventor Willie Wong is acceptable and in compliance with 37 CFR 1.497(a) and (b).

Applicant's "Petition to Correct Inventorship" filed on 28 September 2005 is **MOOT**.

The application will be forwarded to the United States Designated/Elected Office for further processing. The 35 U.S.C. 371(c)(1), (c)(2) and (c)(4) date is **28 September 2005.**

Cynthia M. Kratz
Attorney Advisor
PCT Legal Office

Telephone: (571)272-3286
Facsimile: (571)273-0459

0 6 MAR 2007

UNITED STATES PATENT AND TRADEMARK OFFICE

Commissioner for Patents
United States Patent and Trademark Office
P.O. Box 1450
Alexandria, VA 22313-1450
www.uspto.gov

DUANE MORRIS LLP
PO BOX 5203
PRINCETON NJ 08543-5203

| | | |
|---|---|---|
| In re Application of: | : | |
| HAYES, Kevin, et al. | : | DECISION ON PETITION |
| U.S. Application No.: 10/527,764 | : | (37 CFR 1.47(a)) |
| PCT No.: PCT/GB2003/003981 | : | |
| Int'l Filing Date: 12 September 2003 | : | |
| Priority Date: 12 September 2002 | : | |
| Attorney's Docket No.: Young-3 | : | |
| For: BOAT | : | |

This decision is issued in response to applicants' petition under 37 CFR 1.47(a), filed 24 February 2006. Applicants have submitted $130 as the petition fee; however, the applicable petition fee is $200. Deposit Account No. 50-2061 will be charged the additional $70 required to complete the petition fee.

## BACKGROUND

On 12 September 2003, applicants filed international application PCT/GB2003/003981. The international application claimed a priority date of 12 September 2002, and it designated the United States. On 25 March 2004, the International Bureau (IB) communicated a copy of the international application to the United States Patent And Trademark Office (USPTO). The deadline for submission of the basic national fee was thirty months from the priority date, i.e., 12 March 2005.

On 11 March 2005, applicants filed a Transmittal Letter for entry into the U.S. national stage accompanied by, among other materials, payment of the basic national fee.

On 01 August 2005, the United States Designated/Elected Office (DO/EO/US) mailed a Notification Of Missing Requirements (Form PCT/DO/EO/905) indicating that an oath or declaration acceptable under 37 CFR 1.497 was required.

On 24 February 2006, applicants filed a response to the Notification Of Missing Requirements (with the required five-month extension fee). The response included a declaration executed by one of the two named inventors, and the petition under 37 CFR 1.47(a) considered herein. The petition seeks acceptance of the application without the signature of the remaining inventor, Kevin HAYES, whom applicants assert has refused to execute the application.

## DISCUSSION

A grantable petition under 37 CFR 1.47(a) must be accompanied by: (1) the fee under 37 CFR 1.17; (2) a statement of the last known address of the nonsigning inventor; (3) an oath or declaration by the other inventors on behalf of the other inventors on behalf of themselves and the nonsigning inventor; and (4) factual proof that the inventor refuses to execute the application or cannot be reached after diligent effort.

Applicants here have submitted $130 for the petition fee, and Deposit Account No. 50-2061 will be charged the additional $70 required to complete the $200 petition fee. Accordingly, item (1) is satisfied.

The petition expressly states the last known addresses of the non-signing inventor. Accordingly, item (2) is satisfied.

Regarding item (3), section 409.03(a) of the Manual of Patent Examining Practice (MPEP) states that:

> An oath or declaration signed by all the available joint inventors with the signature block of the nonsigning inventor(s) left blank may be treated as having been signed by all the joint inventors on behalf of the nonsigning inventor(s), unless otherwise indicated.

Here, applicants have filed a declaration executed by one of the two inventors and including an unsigned signature box for the non-signing inventor. This declaration is treated as having been executed by the available inventor on his own behalf and on behalf of the non-signing inventor. Item (3) is therefore satisfied.

Regarding item (4), the petition provides a firsthand statement, with supporting documents, demonstrating that a request for signature, accompanied by a copy of the complete application was forwarded to the inventor at his last known address, that the inventor signed for receipt of this envelope, and that the inventor failed to provide the requested signature in reply to this and a subsequent written request. These materials provide an acceptable showing that the non-signing inventor has refused to execute the declaration. Item (4) is therefore satisfied.

## CONCLUSION

Applicants' petition under 37 CFR 1.47(a) is **GRANTED**.

The application is accepted without the signature of inventor Kevin HAYES.

A notice of the acceptance of the application will be published in the Official Gazette, and a letter informing the non-signing inventor of the application will be forwarded to the non-signing inventor at his last-known address, as set forth in the petition.

The application is being forwarded to the National Stage Processing Branch of the Office of PCT Operations for further processing. The date under 35 U.S.C. 371(c)(1), (c)(2), and (c)(4) is 24 February 2006.

Richard M. Ross
Attorney Advisor
Office of PCT Legal Administration
Telephone: (571) 272-3296
Facsimile: (571) 273-0459

UNITED STATES PATENT AND TRADEMARK OFFICE

Commissioner for Patents
United States Patent and Trademark Office
P.O. Box 1450
Alexandria, VA 22313-1450
www.uspto.gov

20 DEC 2005

Leydig Voit & Mayer, LTD.
Two Prudental Plaza, Suite 4900
180 North Stetson Avenue
Chicago, IL 60601-6780

In re Application of :
TANAKA et al. :
Application No.: 10/527,772 :
PCT No.: PCT/JP04/10540 : DECISION ON REQUEST
Int. Filing Date: 16 July 2004 :
Priority Date: 17 July 2003 :
Attorney Docket No.: 234732 :
For: MEMBRANE PROTEIN LIBRARY FOR PROTEOME ANALYSIS AND METHOD FOR PREPARING SAME

This decision is in response to applicants' "Request for Corrected Filing Receipt" filed 21 October 2005 in the United States Patent and Trademark Office (USPTO). Applicants are requesting a corrected filing receipt which indicates that "PCT/JP04/10540 claims benefit of 10/622,002 filed July 07, 2003."

Applicants' request is **DISMISSED**.

37 CFR 1.78(a)(2)(i) requires that any nonprovisional application claiming the benefit of one or more prior-filed copending nonprovisional applications must contain or be amended to contain a reference to each such prior-filed application, identifying it by application number (consisting of the series code and serial number) and indicating the relationship of the applications. The relationship between the applications is whether the subject application is a continuation, divisional, or continuation-in-part of a prior-filed nonprovisional application. An example of a proper benefit claim is: "This application is a continuation of Application No. 10/---, filed---." A benefit claim that merely states: "This application claims the benefit of Application No. 10/---, filed---," does not comply with 37 CFR 1.72(a)(2)(i) since the proper relationship, which includes the type of continuing application, is not stated. Also, the status of each nonprovisional parent application (if it is patented or abandoned) should also be indicated, following the filing date of the parent nonprovisional application. See MPEP Section 201.11, Rev. 2, May 2004, Reference to Prior Application. The application data sheet filed 11 March 2005 fails to comply with the provisions of 37 CFR 1.78(a)(2)(i) and is therefore unacceptable.

In order to claim benefit under 35 U.S.C. 120 to the prior-filed application at this point, applicants must file a petition under 37 CFR 1.78(a)(3). The petition under 37 CFR 1.78(a)(3) must be accompanied by: 1) the reference required by 35 U.S.C. § 120 and 37

CFR 1.78(a)(2)(i) of the prior-filed application, unless previously submitted; (2) the surcharge set forth in § 1.17(t); and; (3) a statement that the entire delay between the date the claim was due under 37 CFR 1.78(a)(2)(ii) and the date the claim was filed was unintentional. The Director may require additional information where there is a question whether the delay was unintentional.

Further correspondence with respect to this matter should be addressed as follows:

By mail: Mail Stop PCT
Commissioner for Patents
Post Office Box 1450
Alexandria, VA 22313-1450

By hand: Customer Service Window
Mail Stop PCT
Randolph Building
401 Dulany Street
Alexandria, VA 22314

By fax: 571-273-8300
ATTN: Office of PCT Legal Administration

Any questions concerning this matter may be directed to Anthony Smith at 571-272-3298.

Anthony Smith
Attorney-Advisor
Office of PCT Legal Administration
Telephone: 571-272-3298
Fax: 571-273-0459

Boris Milef
PCT Legal Examiner
Office of PCT Legal Administration

04 AUG 2005

#3

UNITED STATES PATENT AND TRADEMARK OFFICE

Commissioner for Patents
United States Patent and Trademark Office
P.O. Box 1450
Alexandria, VA 22313-1450
www.uspto.gov

Eric S. Hyman
Blakely, Sokoloff, Taylor & Zafman, LLP
12400 Wilshire Boulevard, 7th Floor
Los Angeles, CA 90025

| | | |
|---|---|---|
| In re Application of | : | |
| GOTZY | : | DECISION ON PETITION |
| Application No.: 10/527,787 | : | |
| PCT No.: PCT/HU02/00137 | : | UNDER 37 CFR 1.137(b) |
| Int. Filing Date: 06 December 2002 | : | |
| Priority Date: 15 August 2002 | : | |
| Atty. Docket No.: 1202P011 | : | |
| For: EQUIPMENT FOR ADVERTISEMENTS | : | |

The petition to revive under 37 CFR 1.137(b) filed 10 March 2005 in the above-captioned application is hereby **GRANTED** as follows:

Applicant's statement that "the entire delay in filing the required reply from the due date for the required reply until the filing of a grantable petition under 37 CFR 1.137(b) was unintentional" and the prompt filing of the petition satisfies the requirement of 37 CFR 1.137(b)(3).

A review of the application file reveals that applicant has now provided payment of the full, U.S. Basic National Fee. Therefore, the request to revive the application abandoned under 35 U.S.C. 371(d) is granted as to the National stage in the United States of America.

This application is being returned to the United States Designated/Elected Office (DO/EO/US) for the preparation and mailing of a "Notification of Missing Requirements" (Form PCT/DO/EO/905) informing applicant that an executed oath or declaration of the inventor and payment of the appropriate surcharge is required.

Derek A. Putonen
Attorney Advisor
Office of PCT Legal Administration
Tel: (571) 272-3294
Fax: (571) 273-0459

09 AUG 2005

UNITED STATES PATENT AND TRADEMARK OFFICE

#6

COMMISSIONER FOR PATENTS
UNITED STATES PATENT AND TRADEMARK OFFICE
P.O. BOX 1450
ALEXANDRIA, VA 22313-1450
www.uspto.gov

Benoit Castel
Young & Thompson
745 South 23rd Street
Arlington, VA 22202

| | |
|---|---|
| In re Application of<br>STALDER, et al.<br>U.S. Application No.: 10/527,817<br>PCT No.: PCT/CH02/00397<br>Int. Filing Date: 17 July 2002<br>Priority Date: 14 December 2001<br>Attorney Docket No.: 5019-1003<br>For: WATCH CASE BASE AND METHOD FOR MAKING SAME | DECISION ON PETITION<br><br>UNDER 37 CFR 1.137(b) |

The petition to revive under 37 CFR 1.137(b) filed 14 March 2005 in the above-captioned application is hereby **GRANTED** as follows:

Applicant's statement that "the entire delay in filing the required reply from the due date for the reply until the filing of a grantable petition under 37 CFR 1.137(b) was unintentional" and the prompt filing of the petition satisfies the requirement of 37 CFR 1.137(b)(3).

A review of the application file reveals that applicant has now provided payment of the full, U.S. Basic National fee and the requirements of 37 CFR 1.137(b) have been satisfied. Therefore, the request to revive the application abandoned under 35 U.S.C. 371(d) is granted as to the National stage in the United States of America.

This application is being forwarded to the United States Designated/Elected Office (US/DO/EO) for continued processing including the issuance of a Notification of Missing Requirements (Form PCT/DO/EO/905) indicating that an executed oath or declaration of the inventors is required.

Derek A. Putonen
Attorney Advisor
Office of PCT Legal Administration
Tel: (571) 272-3294
Fax: (571) 273-0459

#9

UNITED STATES PATENT AND TRADEMARK OFFICE

Commissioner for Patents
United States Patent and Trademark Office
P.O. Box 1450
Alexandria, VA 22313-1450
www.uspto.gov

23 JAN 2006

Benoit Castel
Young & Thompson
745 South 23rd Street
Arlington, VA 22202

| | | |
|---|---|---|
| In re Application of | : | |
| STALDER, et al. | : | |
| U.S. Application No.: 10/527,817 | : | DECISION ON REQUEST |
| PCT No.: PCT/CH02/00397 | : | |
| Int. Filing Date: 17 July 2002 | : | UNDER 37 CFR 1.42 |
| Priority Date: 14 December 2001 | : | |
| Attorney Docket No.: 5019-1003 | : | |
| For: WATCH CASE BASE AND METHOD FOR MAKING SAME | : | |

This decision is in response to applicant's "Response to Notification of Missing Requirements" filed in the United States Patent and Trademark Office (USPTO) on 24 October 2005. The response is being treated as a request for status under 37 CFR §1.42. No petition fee is due.

## BACKGROUND

On 09 August 2005, applicant was mailed a decision granting applicant's petition to revive pursuant to 37 CFR 1.137(b).

On 22 August 2005, applicant was mailed a "NOTIFICATION OF MISSING REQUIREMENTS UNDER 35 U.S.C. 371" (Form PCT/DO/EO/905) informing applicant of the need to provide an oath or declaration of the inventors, in compliance with 37 CFR 1.497(a) and (b), identifying the application by the international application number and international filing date. Applicant was afforded two months to file the proper reply and informed that this period could be extended pursuant to 37 CFR 1.136(a).

On 24 October 2005, applicant filed the present response. 22 October 2005 being a Saturday, the present response is considered timely filed..

## DISCUSSION

Pursuant to 37 CFR 1.42, first sentence:

"In case of the death of the inventor, the legal representative (executor, administrator, etc.) of the deceased inventor may make the necessary oath or declaration, and apply for and obtain a patent."

The declaration filed 24 October 2005 is executed by co-inventor Alain Maillard. In addition, the declaration is executed by Daniel Boillod as the legal representative to estate of deceased co-inventor, Philippe Stalder. The declaration provides the residence, post office address and country of citizenship for both the deceased inventor and his legal representative. Therefore, it is proper to grant applicant's request for status under 37 CFR 1.42 at this time.

## CONCLUSION

Applicant's petition under 37 CFR 1.42 is **GRANTED**.

This application will be given an international application filing date of 17 July 2002 and a date of **24 October 2005** under 35 U.S.C. 371(c)(1), (c)(2) and (c)(4).

This application is being returned to the DO/EO/US for processing in accordance with this decision.

Derek A. Putonen
Attorney Advisor
Office of PCT Legal Administration
Tel: (571) 272-3294
Fax: (571) 273-0459

# UNITED STATES PATENT AND TRADEMARK OFFICE

UNITED STATES DEPARTMENT OF COMMERCE
United States Patent and Trademark Office
Address: COMMISSIONER FOR PATENTS
P.O. Box 1450
Alexandria, Virginia 22313-1450
www.uspto.gov

| APPLICATION NO. | FILING DATE | FIRST NAMED INVENTOR | ATTORNEY DOCKET NO. | CONFIRMATION NO. |
|---|---|---|---|---|
| 10/527,820 | 05/11/2005 | Yoshihiko Takagi | 26642U | 6449 |

20529 7590 10/24/2007
NATH & ASSOCIATES
112 South West Street
Alexandria, VA 22314

| EXAMINER |
|---|
| MOAZZAMI, NASSER G |

| ART UNIT | PAPER NUMBER |
|---|---|
| 2136 | |

| MAIL DATE | DELIVERY MODE |
|---|---|
| 10/24/2007 | PAPER |

**Please find below and/or attached an Office communication concerning this application or proceeding.**

The time period for reply, if any, is set in the attached communication.

UNITED STATES PATENT AND TRADEMARK OFFICE

Commissioner for Patents
United States Patent and Trademark Office
P.O. Box 1450
Alexandria, VA 22313-1450
www.uspto.gov

MAILED

OCT 24 2007

TECHNOLOGY CENTER 2100

NATH & ASSOCIATES
112 South West Street
Alexandria VA 22314

In re Application of: TAKAGI et al.
Application No. 10/527,820
Filed: July 15, 2004
For: ACCESS METHOD

DECISION ON REQUEST TO PARTICIPATE IN PATENT PROSECUTION HIGHWAY PILOT PROGRAM AND PETITION TO MAKE SPECIAL UNDER 37 CFR 1.102(d)

This is a decision on the request to participate in the Patent Prosecution Highway (PPH) pilot program and the petition under 37 CFR 1.102(d), filed September 27, 2007, to make the above-identified application special.

The petition is **DISMISSED**.

A grantable request to participate in the PPH pilot program and petition to make special require:

(1) The U.S. application must validly claim priority under 35 U.S.C. 119(a) to one or more applications filed in the JPO;

(2) Applicant must submit a copy of the allowable/patentable claim(s) from the JPO application(s) along with an English translation thereof and a statement that the English translation is accurate;

(3) All the claims in the U.S. application must sufficiently correspond or be amended to sufficiently correspond to the allowable/patentable claim(s) in the JPO application(s);

(4) Examination of the U.S. application has not begun;

(5) Applicant must submit a copy of all the office actions from each of the JPO application(s) containing the allowable/patentable claim(s) along with an English translation thereof and a statement that the English translation is accurate;

(6) Applicant must submit an IDS listing the documents cited by the JPO examiner in the JPO office action along with copies of documents except U.S. patents or U.S.

patent application publications; and

(7) The required petition fee under 37 CFR 1.17(h).

The request to participate in the PPH pilot program and petition failed:

1) The request is incomplete because Applicant has not provided a "correspondence of claims" table, and has not provided authorization for charging Petition fee. It seems that the office is not in receipt of Page 2 of the Request for Participating in the Patent Prosecution Highway.

2) item (2) above, since applicant failed to submit a copy of the allowable/patentable claim(s) from the JPO application(s) along with an English translation thereof and a statement that the English translation is accurate. While applicant has provided claims in the English language, the claims allowed in Japanese, and a statement that the claims in English are an accurate translation of the allowed Japanese claims are missing in the petition.

3) item (5) above, because applicant has not provided a Japanese language document of the reasons for refusal.

Accordingly, the Petition is **DISMISSED**.

Applicant is given a time period of ONE MONTH or THIRTY DAYS, whichever is longer, to correct the deficiencies. NO EXTENSION OF TIME UNDER 37 CFR 1.136 IS PERMITTED.

If the deficiencies are not corrected with the time period given, the application will await action in its regular turn.

Response must be faxed to Mano Padmanabhan at 571-273-4210 (RightFax) or 571-273-0308.

Telephone inquiries concerning this decision should be directed to Mano Padmanabhan at 571-272-4210.

All other inquiries concerning the examination or status of the application should be directed to Patent Application Information Retrieval (PAIR) system.

Mano Padmanabhan

Mano Padmanabhan
Quality Assurance Specialist, Technology Center 2100, Workgroup 2180
571-272-4210

UNITED STATES PATENT AND TRADEMARK OFFICE

Commissioner for Patents
United States Patent and Trademark Office
P.O. Box 1450
Alexandria, VA 22313-1450
www.uspto.gov

MAILED

DEC 07 2007

TECHNOLOGY CENTER 2100

NATH & ASSOCIATES
112 South West Street
Alexandria VA 22314

In re Application of: TAKAGI et al.
Application No. 10/527,820
Filed: July 15, 2004
For: ACCESS METHOD

DECISION ON REQUEST TO PARTICIPATE IN PATENT PROSECUTION HIGHWAY PILOT PROGRAM AND PETITION TO MAKE SPECIAL UNDER 37 CFR 1.102(d)

This is a decision on the request to participate in the Patent Prosecution Highway (PPH) pilot program and the petition under 37 CFR 1.102(d), filed September 27, 2007, and the request for reconsideration of adverse decision filed November 14, 2007, to make the above-identified application special.

The petition is **GRANTED**.

A grantable request to participate in the PPH pilot program and petition to make special require:

(1) The U.S. application must validly claim priority under 35 U.S.C. 119(a) to one or more applications filed in the JPO;

(2) Applicant must submit a copy of the allowable/patentable claim(s) from the JPO application(s) along with an English translation thereof and a statement that the English translation is accurate;

(3) All the claims in the U.S. application must sufficiently correspond or be amended to sufficiently correspond to the allowable/patentable claim(s) in the JPO application(s);

(4) Examination of the U.S. application has not begun;

(5) Applicant must submit a copy of all the office actions from each of the JPO application(s) containing the allowable/patentable claim(s) along with an English translation thereof and a statement that the English translation is accurate;

(6) Applicant must submit an IDS listing the documents cited by the JPO examiner in

the JPO office action along with copies of documents except U.S. patents or U.S. patent application publications; and

(7) The required petition fee under 37 CFR 1.17(h).

The request to participate in the PPH pilot program and petition failed:

In response to the petition decision mailed on October 24, 2007, applicant submitted a preliminary amendment canceling claims 1-19, and adding new claims 20-32. Though the claims correspondence table lists claims 1-13 of the U.S. application to correspond with allowed claims 1-13 of the Japanese application, it is understood that applicant intended amended claims 20-32 of the U.S. application to correspond to allowed Japanese claims 1-13. Accordingly, the request to participate in the PPH pilot program and petition comply with the above requirements, and the above-identified application has been accorded "special" status.

The request and petition are **GRANTED**.

Telephone inquiries concerning this decision should be directed to Mano Padmanabhan at 571-272-4210.

All other inquiries concerning the examination or status of the application is accessible in the PAIR system at http://www.uspto.gov/ebc/index.html.

The application is being forwarded to the examiner for action on the merits commensurate with this decision.

Mano Padmanabhan

Mano Padmanabhan
Quality Assurance Specialist, Technology Center 2100, Workgroup 2180
571-272-4210

UNITED STATES PATENT AND TRADEMARK OFFICE

Commissioner for Patents
United States Patent and Trademark Office
P.O. Box 1450
Alexandria, VA 22313-1450
www.uspto.gov

Bradley D. Lytle
Oblon, Spivak, McClelland, Maier & Neustadt, P.C.
1940 Duke Street
Alexandria, VA 22314

MAILED

JUL 02 2009

DIRECTOR OFFICE
TECHNOLOGY CENTER 2400

In re Application of:
Daisuke Kurosaki et al.
Application No. 10/527,822
Filed: March 15, 2005
For: Data Processing Apparatus, Data Processing Method and Program, and Data Processing System

**DECISION ON PETITION UNDER 37 C.F.R. § 1.181**

This is a decision on the petition filed on January 02, 2009 under 37 CFR § 1.181(a)(3) requesting that the Examiner consider all references listed on the Form PTO-1449 filed with the Information Disclosure Statement (IDS) on March 15, 2005. Petitioner is also requesting that the Examiner withdraw his request for the admission outlined at paragraph 3 of the Official Action.

The petition is **GRANTED**.

BACKGROUND

A first non-final Office Action was mailed on 3/10/2008. A second non-final Office Action was mailed on 4/8/2008. A Final Office Action was mailed on 11/6/2008. The Information Disclosure Statement (IDS) of March 15, 2005 was not considered by the examiner in any of the Office Actions. Additionally, the examiner requested applicant to admit that claims 1-4 and 21-24 are anticipated by JP 2002-135809 or JP 11-25541 as indicated in the search report in the Final Office Action mailed on 11/6/2008 (page 3, paragraph 3).

REGULATIONS AND PRACTICE

MPEP § 609 states the following:

> Where the information listed is not in the English language, but was cited in a search report or other action by a foreign patent office in a counterpart foreign application, the requirement for a concise explanation of relevance can be satisfied by submitting an English-language version of the search report or action which indicates the degree of relevance found by the foreign office. This may be an explanation of which portion of the

reference is particularly relevant, to which claims it applies, or merely an "X", "Y", or "A" indication on a search report.

37 CFR § 1.97 (h) states the following:

> The filing of an information disclosure statement shall not be construed to be an admission that the information cited in the statement is, or is considered to be, material to patentability as defined in § 1.56(b).

OPINION

The March 15, 2005 IDS was filed under 37 CFR 1.97 and does meet the requirements of both rules 1.97 and 1.98 and MPEP 609 therefore consideration by the examiner is warranted. A copy of this decision is being forwarded to the examiner's SPE to notify the examiner to consider the references and mail petitioner a notice indicating that they have been considered.

In light of rule 1.97(h), the Examiner should withdraw his request for admission outlined on page 3, paragraph 3 of the Final Office Action mailed on 11/6/2008.

Any inquiry concerning this decision should be directed to Christopher Grant at (571) 272-7294.

Christopher Grant
WorkGroup QAS 2420
Technology Center 2400

0 4 JAN 2008

UNITED STATES PATENT AND TRADEMARK OFFICE

Commissioner for Patents
United States Patent and Trademark Office
P.O. Box 1450
Alexandria, VA 22313-1450
www.uspto.gov

KENYON & KENYON LLP
1500 K STREET N.W.
SUITE 700
WASHINGTON DC 20005

| | | |
|---|---|---|
| In re Application of | : | |
| OGAWA et al. | | |
| Application No.: 10/527,829 | : | DECISION |
| PCT No.: PCT/JP2003/012485 | : | |
| Int. Filing Date: 30 September 2003 | : | |
| Priority Date: 30 September 2002 | : | |
| Attorney Docket No.: 12218/53 | : | |
| For: METHOD OF COAGULATING | : | |
| POLY-3-HYDROXYALKANOIC ACID | : | |

This decision is in response to applicants' "PETITION TO WITHDRAW HOLDING OF ABANDONMENT UNDER 37 CFR 1.181(a)" filed in the United States Patent and Trademark Office (USPTO) on 20 November 2007. No petition fee is required.

## BACKGROUND

On 30 September 2003, applicants filed international application PCT/JP2003/012485, which designated the United States and claimed a priority date of 30 September 2002. A copy of the international application was communicated to the United States Patent and Trademark Office from the International Bureau on 22 April 2004. The thirty-month period for paying the basic national fee in the United States expired at midnight on 30 March 2005.

On 14 March 2005, applicants filed, *inter alia*, a submission for entry into the national stage in the United States which was accompanied by, *inter alia*, the U.S. Basic National Fee.

On 03 November 2005, the United States Designated/Elected Office (DO/EO/US) mailed a NOTIFICATION OF MISSING REQUIREMENTS UNDER 35 U.S.C. 371 (Form PCT/DO/EO/905) indicating, *inter alia*, that an oath or declaration in compliance with 37 CFR 1.497(a)-(b) and the surcharge under 37 CFR 1.492(h) were required.

On 15 November 2007, the DO/EO/US mailed a NOTIFICATION OF ABANDONMENT (Form PCT/DO/EO/909) indicating that the application was abandoned as to the United States of America for failure to respond the NOTIFICATION OF MISSING REQUIREMENTS mailed 03 November 2005.

On 20 November 2007, applicants filed the instant "PETITION TO WITHDRAW HOLDING OF ABANDONMENT UNDER 37 CFR 1.181(a)". The petition was accompanied by, *inter alia*, a copy of a declaration of inventors and a USPTO date-stamped postcard receipt.

## DISCUSSION

Applicants have provided sufficient evidence to establish that on 15 November 2005 applicants filed a declaration of inventors. The proof is in the form of the copy of the receipt for the above-identified application which bears a USPTO date stamp of 15 November 2005 and which itemizes a "COPY OF DECLARATION AND POWER OF ATTORNEY" and identifies the above-captioned application number, attorney docket number, applicant, and title. Further, practitioner states that the copy of the declaration filed 20 November 2007 is a copy of the declaration originally filed 15 November 2005. Therefore, in view of the date-stamped receipt and practitioner's statement, the declaration received on 20 November 2007 may properly be accepted as originally received in the USPTO on 15 November 2005. The NOTIFICATION OF ABANDONMENT mailed 15 November 2007 is hereby vacated.

The declaration filed 15 November 2005 is in compliance with 37 CFR 1.497(a)-(b).

## CONCLUSION

The petition under 37 CFR 1.181 is **GRANTED** for the reasons set forth above.

The NOTIFICATION OF ABANDONMENT mailed 15 November 2007 is **VACATED**.

This application is being forwarded to the National Stage Processing Branch of the Office of PCT Operations to continue national stage processing of the application in accordance with this decision.

/Daniel Stemmer/

Daniel Stemmer
Legal Examiner
PCT Legal Affairs
Office of Patent Cooperation Treaty
Legal Administration
Telephone: (571) 272-3301
Facsimile: (571) 273-0459

UNITED STATES PATENT AND TRADEMARK OFFICE

Commissioner for Patents
United States Patent and Trademark Office
P.O. Box 1450
Alexandria, VA 22313-1450
www.uspto.gov

SHERIDAN ROSS PC
1560 BROADWAY
SUITE 1200
DENVER CO 80202

MAILED

JUN 17 2010

OFFICE OF PETITIONS

In re Patent No. 7,615,342
Issued: November 10, 2009
Application No. 10/527,831
Filed: January 9, 2006
Attorney Docket No. 5517-19

: DECISION ON REQUEST
: FOR RECONSIDERATION
: OF PATENT TERM ADJUSTMENT
: AND
: NOTICE OF INTENT TO ISSUE
: CERTIFICATE OF CORRECTION

This is a decision on the APPLICATION FOR PATENT TERM ADJUSTMENT INCLUDING REQUEST FOR RECONSIDERATION UNDER 37 CFR § 1.705(d) filed on January 11, 2010, requesting that the patent term adjustment indicated on the above-identified patent be corrected from 82 days to 382 days.

The petition to correct the patent term adjustment indicated on the above-identified patent to indicate that the term of the above-identified patent is extended or adjusted by three hundred eighty-one (381) days is **GRANTED to the extent indicated herein**.

The calculation of delay pursuant to 37 CFR 1.702(b) is based on a national stage commencement date of March 16, 2008. Accordingly, the "B" delay period, the over three year period begins on March 16, 2008, the date the national stage commenced under 35 U.S.C. 371(f), and ends on November 10, 2009, the day the patent issued and is 604 days, not 605 days. As such, the patent term adjustment is 381 days (0 "A delay" days plus 604 "B delay" days minus 223 days for applicant delay).

The Office will *sua sponte* issue a certificate of correction. Pursuant to 37 CFR 1.322, the Office will not issue a certificate of correction without first providing assignee or patentee an opportunity to be heard. Accordingly, patentees are given **one (1) month or thirty (30) days**, whichever is longer, from the mail date of this decision to respond. No extensions of time will be granted under § 1.136.

The application is being forwarded to the Certificates of Branch for issuance of a certificate of correction. The Office will issue a certificate of correction indicating that the

term of the above-identified patent is extended or adjusted by **three hundred eighty-one (381)** days.

Telephone inquiries specific to this decision should be directed to Senior Petitions Attorney Patricia Faison-Ball at (571) 272-3212.

Anthony Knight
Director
Office of Petitions

Enclosure: Copy of DRAFT Certificate of Correction

DRAFT

UNITED STATES PATENT AND TRADEMARK OFFICE

# CERTIFICATE OF CORRECTION

PATENT : 7,615,342 B2

DATED : November 10, 2009

INVENTOR(S) : Kathryn Nance North

It is certified that error appears in the above-identified patent and that said Letters Patent is hereby corrected as shown below:

On the cover page,

[*] Notice: Subject to any disclaimer, the term of this patent is extended or adjusted under 35 USC 154(b) by (82) days

Delete the phrase "by 82 days" and insert – by 381 days--

UNITED STATES PATENT AND TRADEMARK OFFICE

Commissioner for Patents
United States Patent and Trademark Office
P.O. Box 1450
Alexandria, VA 22313-1450
www.uspto.gov

MAILED

JUL 07 2010

OFFICE OF PETITIONS

**LIN & ASSOCIATES**
**INTELLECTUAL PROPERTY INC.**
**P.O. BOX 2339**
**SARATOGA CA 95070-0339**

| | | |
|---|---|---|
| In re Patent No. 7,679,607 | : | |
| Issue Date : March 16, 2010 | : | |
| Application No. 10/527,849 | : | ON PETITION |
| Filed: March 15, 2005 | : | |
| Attorney Docket No. 05504-PCT | : | |

This is a decision on the petition filed May 4, 2010, which is being treated as a request under 37 CFR 3.81(b)[1] to correct the name of the assignee on the front page of the above-identified patent by way of a Certificate of Correction.

The request is **GRANTED**.

Telephone inquiries concerning this decision may be directed to Diane C. Goodwyn at (571) 272-6735. Inquiries regarding the issuance of a certificate of correction should be directed to the Certificate of Correction Branch at (571) 272-4200.

The Certificates of Correction Branch will be notified of this decision granting the petition under 37 CFR 3.81(b) and directing issuance of the requested Certificate of Correction.

Thurman K Page

Thurman K. Page
Petitions Examiner
Office of Petitions

[1] *See* MPEP 1309, subsection II; and Official Gazette of June 22, 2004.

06 SEP 2005

UNITED STATES PATENT AND TRADEMARK OFFICE

Commissioner for Patents
United States Patent and Trademark Office
P.O. Box 1450
Alexandria, VA 22313-1450
www.uspto.gov

CALFEE, HALTER & GRISWOLD, LLP
800 SUPERIOR AVENUE
SUITE 1400
CLEVELAND, OH 44114

| | | |
|---|---|---|
| In re Application of | : | |
| WILSON, Timothy E. | : | |
| Application No.: 10/527,860 | : | DECISION ON |
| PCT No.: PCT/US03/38942 | : | |
| Int. Filing Date: 09 December 2003 | : | PETITION |
| Priority Date: 09 December 2002 | : | |
| Attorney Docket No.: 11694/04407 | : | UNDER 37 CFR 1.182 |
| For: INDUCTION DRYER | : | |

This decision is in response to applicants' "Petition Under 37 CFR §1.181 and §1.182," filed with the United States Patent and Trademark Office on 04 May 2005. It has been treated as a petition under 37 CFR 1.182. The balance of the petition fee will be charged to deposit account no. 03-0172, as authorized.

## BACKGROUND

On 15 March 2005, applicants filed national stage papers in the United States Designated/Elected Office (DO/EO/US), which claimed a priority date of 09 December 2002. The submission included, *inter alia*, a transmittal Letter and the basic national fee. The Transmittal Letter indicated the international application number was PCT/US03/18942.

On 04 May 2005, applicants submitted the instant petition under 37 CFR 1.182 to correct the national stage information in the above application to indicate it is a 371 filing of PCT/US03/38942.

## DISCUSSION

Applicants have explained that the paperwork was intended as a national stage entry of PCT/US03/38942. The indications will be corrected in the file and the file will be processed as a national stage entry of PCT/US03/38942.

## CONCLUSION

For the reasons listed above, the Petition Under 37 CFR 1.182 is **GRANTED**.

This application is being forwarded to the National Stage Processing Division of the Office of the PCT Operations for continued processing, including mailing of a Notification of Missing Requirements indicating that an oath or declaration and the surcharge for late filing of the oath or declaration are required.

Erin P. Thomson

Erin P. Thomson
Attorney Advisor
PCT Legal Administration

Telephone: 571-272-3292
Facsimile: 571-273-0459

29 JUN 20

UNITED STATES PATENT AND TRADEMARK OFFICE

Commissioner for Patents
United States Patent and Trademark Office
P.O. Box 1450
Alexandria, VA 22313-1450
www.uspto.gov

SCHIFF HARDIN LLP
Patent Department
6600 Sears Tower
Chicago, IL 60606-6473

| | |
|---|---|
| In re Application of<br>DISTLER, Freidrich *et al*<br>U.S. Application No.: 10/527,875<br>PCT No.: PCT/DE2003/002890<br>Int. Filing Date: 01 September 2003<br>Priority Date: 16 September 2002<br>Attorney Docket No.: P05,0046<br>For: METHOD FOR OPERATING A COMPUTED TOMOGRAPHY APPARATUS HAVING A DIAPHRAGM AT THE RADIATION DETECTOR | **DECISION** |

This decision is in response to the "Petition Under 37 C.F.R. §1.182 to Correct Designation of PCT Application on Transmittal Letter" ('Pet.") filed via facsimile on 27 June 2005 and again on 28 June 2005.

## BACKGROUND

On 16 March 2005, petitioners filed a national stage application listing the PCT application number on the transmittal letter (Form PTO-1390) as PCT/DE2003/003054. All other papers in the application including the substitute specification and declaration listed the international application as PCT/DE2003/002890. This application was processed by the United States Designated/Elected Office as the national stage of PCT/DE2003/003054.

On 25 March 2005, counsel filed another national stage application for PCT/DE2003/003054 which was accompanied by, *inter alia*, a declaration and specification listing the international application as PCT/DE2003/003054. This application was given U.S. application No. 10/529,827.

On 27 June 2005, after a telephone call from the undersigned, petitioners filed the subject petition to correct the transmittal letter in the above-captioned application. This petition was accompanied with a new transmittal letter (Form PTO-1390).

On 28 June 2005, applicants resubmitted the papers filed 27 June 2005. Petitioners authorized that the full petition fee of $400.00 be charged to Deposit Account No. 50-1519.

## DISCUSSION

In the papers filed 28 June 2005, petitioners state that the transmittal letter accompanying the initial application filing "incorrectly identified the underlying PCT as PCT/DE2003/003054. Every other document for the above-referenced application that was filed on March 16, 2005 was designated with the correct PCT application number." Pet. at ¶ 1. Petitioners request to substitute the original transmittal letter with the transmittal letter filed with the instant petition.

This request is treated as a petition under 37 CFR 1.182. The $400.00 petition fee has been charged to Deposit Account No. 50-1519 as authorized. A review of the above-captioned application file verifies that the wrong U.S. application number, PCT/DE2003/003054, was designated on the transmittal letter filed with the original papers. Petitioners submitted a corrected transmittal letter and the required petition fee with the instant petition.

Petitioners have met all the requirements of a grantable petition.

## CONCLUSION

For the reasons listed above, the petition under 37 CFR 1.182 to correct the PCT application number listed on the transmittal letter is **GRANTED**.

Petitioners are reminded to use **PCT/DE2003/002890** for all future correspondence regarding this application.

It is noted that U.S. application No. 10/529,827 is the national stage application for PCT/DE2003/003054.

This application is being forwarded to the National Stage Processing Division of the Office of PCT Operations for continued processing.

James Thomson

James Thomson
Attorney Advisor
Office of PCT Legal Administration

Tel.: (571) 272-3302

26 MAY 2005

UNITED STATES PATENT AND TRADEMARK OFFICE

#3

COMMISSIONER FOR PATENTS
UNITED STATES PATENT AND TRADEMARK OFFICE
P.O. BOX 1450
ALEXANDRIA, VA 22313-1450
www.uspto.gov

John D. Thallemer
Novartis
Corporate Intellectual Property
One Health Plaza, Building 104
East Hanover, NJ 07936-1080

| | | |
|---|---|---|
| In re Application of | : | |
| ASCHER et al. | : | |
| Application No.: 10/527,882 | : | DECISION ON PETITION |
| PCT No.: PCT/EP03/07603 | : | UNDER 37 CFR 1.137(b) |
| Int. Filing Date: 14 July 2003 | : | |
| Priority Date: 15 July 2002 | : | |
| Attorney Docket No.: IB/G-32500A | : | |
| For: CEPHALOSPORINS | | |

The petition to revive under 37 CFR 1.137(b) filed 15 March 2005 in the above-captioned application is hereby **GRANTED** as follows:

Applicants' statement that "the entire delay in filing the required reply from the due date for the reply until the filing of a grantable petition under 37 CFR 1.137(b) was unintentional" meets the requirements of 37 CFR 1.137(b)(3).

A review of the application file reveals that applicants have submitted the basic national fee and the requirements of 37 CFR 1.137(b) have been satisfied. Therefore, the request to revive the application abandoned under 35 U.S.C. 371(d) is granted as to the National stage in the United States of America.

This application is being returned to the United States Designated/Elected Office for processing in accordance with this decision.

Anthony Smith

Anthony Smith
Attorney-Advisor
Office of PCT Legal Administration
Tel.: 571-272-3298
Facsimile: 571-273-0459

UNITED STATES PATENT AND TRADEMARK OFFICE

Commissioner for Patents
United States Patent and Trademark Office
P.O. Box 1450
Alexandria, VA 22313-1450
www.uspto.gov

**NOVARTIS**
**CORPORATE INTELLECTUAL PROPERTY**
**ONE HEALTH PLAZA 104/3**
**EAST HANOVER NJ 07936-1080**

COPY MAILED

SEP 19 2006

OFFICE OF PETITIONS

| | | |
|---|---|---|
| In re Application of | : | |
| **ASCHER**, et al. | : | |
| Application No. 10/527,882 | : | DECISION ON PETITION |
| Filed: March 15, 2005 | : | TO WITHDRAW |
| Attorney Docket No. 35200A | : | FROM RECORD |
| | : | |

This is a decision on the Request to Withdraw as attorney or agent of record under 37 C.F.R. § 1.36(b), filed May 16, 2006.

The request is **NOT APPROVED**.

A grantable request to withdraw as attorney/agent of record must be signed by every attorney/agent seeking to withdraw or contain a clear indication that one attorney is signing on behalf of another/others. A request to withdraw will not be approved unless at least 30 (thirty) days would remain between the date of approval and the later of the expiration date of a time to file a response or the expiration date of the maximum time period which can be extended under 37 C.F.R. § 1.136(a).

The Office cannot approve the request at this time since the reasons provided do not meet any of the conditions under the mandatory or permissive categories enumerated in 37 CFR 10.40. Section 10.40 of Title 37 of the Code of Federal Regulation states, "[a] practitioner shall not withdraw from employment in a proceeding before the Office without permission from the Office[.]" More specifically, 37 CFR 10.40 states, "[i]f paragraph (b) of this section is not applicable, a practitioner may not request permission to withdraw in matter pending before the Office unless such request or such withdrawal is" for one the permissive reasons listed in 37 CFR 10.40(c). The reasons set forth in the request, "file transfer" does not meet any of the conditions set forth in 37 CFR 10.40.

All future communications from the Office will continue to be directed to the above-listed address until otherwise notified by applicant.

Telephone inquiries concerning this decision should be directed to Monica A. Graves at 571-272-7253.

Denise Pothier
Petitions Examiner
Office of Petitions

cc: **D. Peter Hochberg Co., LPA**
**1940 East 6th Street, 6th Floor**
**Cleveland, OH 44114-2294**

UNITED STATES PATENT AND TRADEMARK OFFICE

Commissioner for Patents
United States Patent and Trademark Office
P.O. Box 1450
Alexandria, VA 22313-1450
www.uspto.gov

**NOVARTIS**
**CORPORATE INTELLECTUAL PROPERTY**
**ONE HEALTH PLAZA 104/3**
**EAST HANOVER NJ 07936-1080**

**COPY MAILED**

NOV 2 7 2006

**OFFICE OF PETITIONS**

In re Application of

**ASCHER**, et al.
Application No. 10/527,882
Filed: March 15, 2005
Attorney Docket No. IB/G-32500A

DECISION ON PETITION
TO WITHDRAW
FROM RECORD

This is a decision on the Request to Withdraw as attorney or agent of record under 37 C.F.R. § 1.36(b), filed October 27, 2006.

The request is **APPROVED**.

A grantable request to withdraw as attorney/agent of record must be signed by every attorney/agent seeking to withdraw or contain a clear indication that one attorney is signing on behalf of another/others. A request to withdraw will not be approved unless at least 30 (thirty) days would remain between the date of approval and the later of the expiration date of a time to file a response or the expiration date of the maximum time period which can be extended under 37 C.F.R. § 1.136(a).

The request was signed by John D. Thallemer on behalf of all attorneys of record. All attorneys/agents associated have been withdrawn. Applicant is reminded that there is no attorney of record at this time.

The request to change the correspondence of record is not acceptable as the requested correspondence address is not that of: (1) the first named signing inventor; or (2) an intervening assignee of the entire interest under 37 C.F.R 3.71. All future communications from the Office will be directed to the first named signing inventor at the first copied address below until otherwise properly notified by the applicant.

Telephone inquiries concerning this decision should be directed to the undersigned at 571-272-7253.

Monica A. Graves
Petitions Examiner
Office of Petitions

cc: **GERD ASCHER**
**DAXERFELD 3**
**KUNDL, AUSTRIA 6250**

cc: **D. PETER HOCHBERG CO. LPA**
**1940 EAST 6TH STREET, 6TH FLOOR**
**CLEVELAND, OH 44114-2294**

UNITED STATES PATENT AND TRADEMARK OFFICE

UNITED STATES DEPARTMENT OF COMMERCE
United States Patent and Trademark Office
Address: COMMISSIONER FOR PATENTS
P.O. Box 1450
Alexandria, Virginia 22313-1450
www.uspto.gov

| APPLICATION NUMBER | FILING OR 371 (c) DATE | FIRST NAMED APPLICANT | ATTY. DOCKET NO./TITLE |
|---|---|---|---|
| 10/527,882 | 03/15/2005 | Gerd Ascher | IB/G-32500A |

**CONFIRMATION NO. 5833**

*OC000000021363743*

001095
NOVARTIS
CORPORATE INTELLECTUAL PROPERTY
ONE HEALTH PLAZA 104/3
EAST HANOVER, NJ 07936-1080

Date Mailed: 11/27/2006

## NOTICE REGARDING CHANGE OF POWER OF ATTORNEY

This is in response to the Power of Attorney filed 10/27/2006.

- The withdrawal as attorney in this application has been accepted. Future correspondence will be mailed to the new address of record. 37 CFR 1.33.

---

MONICA A GRAVES
OP (571) 272-7253

FORMER ATTORNEY/AGENT COPY

16 SEP 2005

UNITED STATES PATENT AND TRADEMARK OFFICE

Commissioner for Patents
United States Patent and Trademark Office
P.O. Box 1450
Alexandria, VA 22313-1450
www.uspto.gov

NOVARTIS
CORPORATE INTELLECTUAL PROPERTY
ONE HEALTH PLAZA 104/3
EAST HANOVER NJ 07936-1080

| | |
|---|---|
| In Re Application of<br>HOROWITZ et al.<br>Serial No.: 10/527,883<br>PCT No.: PCT/EP03/10239<br>Int. Filing Date: 15 September 2003<br>Priority Date: 16 September 2002<br>Attorney Docket No.: PA/4-32458A<br>For: METHOD FOR PREVENTING OR REDUCING SECONDARY FRACTURES AFTER HIP FRACTURE | DECISION |

This is in response to applicant's communication filed in the United States Patent and Trademark Office (USPTO) on 06 September 2005.

On 15 March 2005, applicant filed a request for national stage entry under 35 U.S.C. 371 for the above referenced international application. On 15 August 2005, a Notification of Acceptance was mailed to applicant indicating the date of receipt of all requirements under 35 U.S.C. 371(c)(1), (c)(2) and (c)(4) as 15 March 2005.

On 06 September 2005, applicant filed the instant communication requesting clarification of the U.S. serial number assigned to this application. Applicant provided a copy of a postcard receipt, date-stamped by the USPTO and bearing U.S. serial no.10/527,884.

A review of the application file reveals that U.S. serial no. 10/527,883 is the application number assigned to the papers filed on 15 March 2005 for the above referenced PCT international application, title of invention, inventor and attorney docket number. The application number identified on the postcard receipt is merely the preliminary assignment of an application number to the application and should not be relied upon as necessarily representing the application number assigned to such application.

Applicant is advised to reference U.S. serial no. 10/527,883 in all future correspondence relating to U. S. national stage application of PCT/EP03/10239.

Cynthia M. Kratz

Cynthia M. Kratz
Attorney Advisor
Office of PCT Legal Administration
Telephone: 571-272-3286

UNITED STATES PATENT AND TRADEMARK OFFICE

UNITED STATES DEPARTMENT OF COMMERCE
United States Patent and Trademark Office
Address: COMMISSIONER FOR PATENTS
P.O. Box 1450
Alexandria, Virginia 22313-1450
www.uspto.gov

HOGAN & HARTSON LLP
ONE TABOR CENTER, SUITE 1500
1200 SEVENTEENTH ST
DENVER, CO 80202

Mail Date: 04/26/2010

| | | |
|---|---|---|
| **Applicant** | : Patrick Galili | : DECISION ON REQUEST FOR |
| **Patent Number** | : 7587004 | : RECALCULATION of PATENT |
| **Issue Date** | : 09/08/2009 | : TERM ADJUSTMENT IN VIEW |
| **Application No** | : 10/527,888 | : OF WYETH AND NOTICE OF INTENT TO |
| **Filed** | : 03/15/2005 | : ISSUE CERTIFICATE OF CORRECTION |
| | | : |

The Request for Recalculation is **GRANTED** to the extent indicated.

The patent term adjustment has been determined to be **702** days. The USPTO will *sua sponte* issue a certificate of correction reflecting the amount of PTA days determined by the recalculation.

Prior to the issuance of the certificate of correction, the USPTO will afford patentee an opportunity to be heard and request reconsideration. Accordingly, patentee has **one month or thirty (30) days**, whichever is longer, to file a request for reconsideration of this patent term adjustment calculation. See 35 U.S.C. 154(b)(3)(B)(ii) and 37 CFR 1.322(a)(4). No extensions of time will be granted under 37 CFR 1.136.

Patentee should use document code PET.OP if electronically filing a request for reconsideration of this patent term adjustment calculation. The patentee must also include the information required by 37 CFR 1.705(b)(2) and the fee required by 37 CFR 1.18(e). If patentee does not file a timely request for reconsideration of this patent term adjustment calculation including the information required by 37 CFR 1.705(b)(2) and the fee required by 37 CFR 1.18(e), the USPTO will issue a certificate of correction reflecting the PTA determination noted above.

Patentee should be aware that in order to preserve the right to review in the United States District Court for the District of Columbia of the USPTO patent term adjustment determination, patentee must ensure that he or she also take the steps required under 35 U.S.C. 154(b)(4)(A) in a timely manner. Nothing in the request for recalculation should be construed as providing an alternative time frame for commencing a civil action under 35 U.S.C. 154(b)(4)(A).

Any questions concerning this decision should be directed to the Office of Patent Legal Administration at 571-272-7702.

05 MAY 2005

UNITED STATES PATENT AND TRADEMARK OFFICE

Commissioner for Patents
United States Patent and Trademark Office
P.O. Box 1450
Alexandria, VA 22313-1450
www.uspto.gov

Deborah G. VandenHoff
Van Tassell & Associates
P.O. Box 2928
Bellaire, TX 77402-2928

| | | |
|---|---|---|
| In re Application of | : | |
| MONNIER | : | DECISION ON PETITION |
| Serial No.: 10/527,897 | : | |
| PCT No.: PCT/CH02/00150 | : | UNDER 37 CFR 1.10(e) |
| Int. Filing Date: 13 March 2002 | : | |
| Priority Date: 20 March 2001 | : | |
| Atty Docket No.: GLN-032US | : | |
| For: DEVICE FOR LIMITING ACCESS TO A CONFINED SPACE | : | |

This decision is in response to applicant's correspondence filed 14 March 2005 in the United States Patent and Trademark Office (USPTO). The correspondence is being treated as a petition under 37 CFR 1.10(e). No petition fee is required.

## BACKGROUND

On 13 March 2002, applicant filed international application PCT/CH02/00150 which claimed priority to an earlier application filed 20 March 2001. A copy of the international application was communicated to the United States Patent and Trademark Office from the International Bureau on 26 September 2002. The thirty-month period for paying the basic national fee in the United States expired at midnight on 20 September 2003.

On 14 March 2005, applicant filed papers purporting to be a 19 September 2003 United States National stage filing for the above-identified international application. The papers are being treated as a petition under 37 CFR 1.10(e).

## DISCUSSION

37 CFR 1.10(e) states:

Any person mailing correspondence addressed as set out in § 1.1(a) to the Office with sufficient postage utilizing the "Express Mail Post Office to Addressee" service of the USPS but not received by the Office, may petition the Director to consider such correspondence filed in the Office on the USPS deposit date, provided that:

(1) The petition is filed promptly after the person becomes aware that the Office has no evidence of receipt of the correspondence;

(2) The number of the "Express Mail" mailing label was placed on the paper(s) or fee(s) that constitute the correspondence prior to the original mailing by "Express Mail";

(3) The petition includes a copy of the originally deposited paper(s) or fee(s) that constitute the correspondence showing the number of the "Express Mail" mailing label thereon, a copy of any returned postcard receipt, a copy of the "Express Mail" mailing label showing the "date-in," a copy of any other official notation by the USPS relied upon to show the date of deposit, and, if the requested filing date is a date other than the "date-in" on the "Express Mail" mailing label or other official notation entered by the USPS, a showing pursuant to paragraph (d)(3) of this section that the requested filing date was the date the correspondence was deposited in the "Express Mail Post Office to Addressee" service prior to the last scheduled pickup for that day; and

(4) The petition includes a statement which establishes, to the satisfaction of the Director, the original deposit of the correspondence and that the copies of the correspondence, the copy of the "Express Mail" mailing label, the copy of any returned postcard receipt, and any official notation entered by the USPS are true copies of the originally mailed correspondence, original "Express Mail" mailing label, returned postcard receipt, and official notation entered by the USPS.

Applicant has satisfied items 1 and 2 above.

As to item (3), applicant has not provided a copy of the "Express Mail" mailing label for the papers purported to have been filed on 19 September 2003. This is especially important in the present case as the USPS track and confirm database does not show any information for U.S. Express Mail number "ER275611307US"; the Express Mail number which appears on the transmittal letter. As such, there is presently no evidence that the original papers were in fact deposited for mailing on 19 September 2003.

Regarding item (4), applicant states that "enclosed is a copy of the submission originally filed in the U.S. Patent Office under 35 U.S.C. § 371 on September 19, 2003." However, applicant has not attested that the copies filed on 14 March 2005 are a true and complete copy of the original papers filed. In addition, applicant has not provided a statement from an individual with firsthand knowledge of the preparation and depositing of the Express Mail package.

In light of the above, it is not possible to grant applicant's petition under 37 CFR 1.10(e) at this time.

## CONCLUSION

For the reasons stated above, applicant's petition under 37 CFR 1.10(e) is **DISMISSED**.

Any reconsideration on the merits of this petition must be filed within **TWO (2) MONTHS** from the mail date of this decision. Any reconsideration request should include a cover letter entitled "Renewed Petition Under 37 CFR 1.10(e)." No additional petition fee is required. Extensions of time may be obtained under 37 CFR 1.136(a).

Any further correspondence with respect to this matter should be directed to Mail Stop PCT, Commissioner for Patents, Office of PCT Legal Administration, P.O. Box 1450, Alexandria, Virginia 22313-1450, with the contents of the letter marked to the attention of the Office of PCT Legal Administration

Derek A. Putonen
Attorney Advisor
Office of PCT Legal Administration
Tel: 571-272-3294
Fax: 571-273-0459

31 MAY 2005

#5

UNITED STATES PATENT AND TRADEMARK OFFICE

COMMISSIONER FOR PATENTS
UNITED STATES PATENT AND TRADEMARK OFFICE
P.O. BOX 1450
ALEXANDRIA, VA 22313-1450
www.uspto.gov

Deborah G. VandenHoff
Van Tassel & Associates
P.O. Box 2928
Bellaire, TX 77402-2928

| | |
|---|---|
| In re Application of<br>MONNIER<br>U.S. Application No.: 10/527,897<br>PCT No.: PCT/CH02/00150<br>Int. Filing Date: 13 March 2002<br>Priority Date: 20 March 2001<br>Attorney Docket No.: GLN-032US<br>For: DEVICE FOR LIMITING ACCESS TO A CONFINED SPACE | DECISION ON PETITION<br>UNDER 37 CFR 1.10(e) |

This is a decision on applicant's papers filed 25 May 2005 in the United States Patent and Trademark Office (USPTO). The papers are being treated as a renewed petition under 37 CFR 1.10(e). No petition fee is required.

## BACKGROUND

On 05 May 2005, applicant was mailed a decision dismissing applicant's petition under 37 CFR 1.10(e) to accept the papers filed 14 March 2005 as having been filed 19 September 2003. Applicant was afforded two months to file any request for reconsideration.

On 25 May 2005, applicant filed the present renewed petition.

## DISCUSSION

As detailed in the decision mailed 05 May 2005,

37 CFR 1.10(e) states:

> Any person mailing correspondence addressed as set out in § 1.1(a) to the Office with sufficient postage utilizing the "Express Mail Post Office to Addressee" service of the USPS but not received by the Office, may petition the Commissioner to consider such correspondence filed in the Office on the USPS deposit date, provided that:
>
> (1) The petition is filed promptly after the person becomes aware that the Office has no evidence of receipt of the correspondence;
>
> (2) The number of the "Express Mail" mailing label was placed on the paper(s) or fee(s) that constitute the correspondence prior to the original mailing by "Express

Mail";

(3) The petition includes a copy of the originally deposited paper(s) or fee(s) that constitute the correspondence showing the number of the "Express Mail" mailing label thereon, a copy of any returned postcard receipt, a copy of the "express Mail" mailing label showing the "date-in," a copy of any other official notation by the USPS relied upon to show the date of deposit, and, if the requested filing date is a date other than the "date-in" on the "Express Mail" mailing label or other official notation entered by the USPS, a showing pursuant to paragraph (d)(3) of this section that the requested filing date was the date the correspondence was deposited in the "Express Mail Post Office to Addressee" service prior to the last scheduled pickup for that day; and

(4) The petition includes a statement which establishes, to the satisfaction of the Commissioner, the original deposit of the correspondence and that the copies of the correspondence, the copy of the "Express Mail" mailing label, the copy of any returned postcard receipt, and any official notation entered by the USPS are true copies of the originally mailed correspondence, original "Express Mail" mailing label, returned postcard receipt, and official notation entered by the USPS.

Applicant previously satisfied items 1 and 2 above.

As to item (3), applicant deposited the Express Mail mailing in question in a USPS drop box and never received a copy of the mailing label from the Postal Service. As such, it is impossible for applicant to provide a copy of the Express Mail mailing label. However, as shown above, in order to satisfy this item as to the requested filing date, applicant may make a showing pursuant to 37 CFR 1.10(d)(3) and that any showing pursuant to this paragraph must be corroborated by evidence from the USPS or that came into being after deposit and within one business day of the correspondence in the "Express Mail Post Office to Addressee" service of the USPS. Applicant has provided such a statement. Specifically, applicant has provided a copy of the firm's "US Express Mail Log." On page 6 of the log the mailing in question is clearly listed along with the Express Mail number: ER275611307US. For the purposes of 37 CFR 1.10(d)(3), the deposit time confirmation box was initialed by counsel, the individual who deposited the mailing, the following morning at 11:00 am. Applicant has therefore satisfied this item.

With regard to item (4), applicant has included an affidavit from Ms. VandenHoff detailing her preparation of the Express Mail package in question and her depositing of said package in the USPS Express Mail drop box on Friday, September 19, 2003 at 1:45 pm; prior to the last scheduled pick-up of the day at 3:45 pm. The affidavit confirms that the package contained the proper amount of postage. It is clear from an examination of the firm's US Express Mail log and the affidavit that Ms. VandenHoff is familiar with the USPS Express Mail system and that the papers filed on 14 March 2005 were true and complete copies of the papers originally filed on 19 September 2003.

As such, it is proper to grant applicant's petition at this time. The papers filed 14 March 2005 are accepted as true and complete copies of the papers originally mailed 19

September 2003. Further, a review of the application papers finds that all of the requirements of 35 U.S.C. 371 for entry into the national stage in the United States were satisfied on 19 September 2003.

## CONCLUSION

Applicant's renewed petition under 37 CFR 1.10(e) is **GRANTED**.

This application will be given an international application filing date of 13 March 2002 and a date of **13 September 2003** under 35 U.S.C. 371(c)(1), (c)(2) and (c)(4).

This application is being returned to the DO/EO/US for processing in accordance with this decision.

Derek A. Putonen
Attorney Advisor
Office of PCT Legal Administration
Tel: (571) 272-3294
Fax: (571) 273-0459

19 AUG 2005

UNITED STATES PATENT AND TRADEMARK OFFICE

Commissioner for Patents
United States Patent and Trademark Office
P.O. Box 1450
Alexandria, VA 22313-1450
www.uspto.gov

Deborah G. VandenHoff
VAN TASSEL & ASSOCIATES
P.O. Box 2928
Bellaire, TX 77402-2928

| | |
|---|---|
| In re Application of:<br>MONNIER<br>Application No.: 10/527,897<br>PCT No.: PCT/CHO2/00150<br>Int. Filing: 13 March 2002<br>Priority Date: 20 March 2001<br>Attorney Docket No.: GLN-032US<br>For: DEVICE FOR LIMITING ACCESS TO A CONFINED SPACE | CORRECTION TO DECISION ON PETITION UNDER 37 CFR 1.10(e) MAILED 31 MAY 2005 |

In a decision mailed by this Office on 31 May 2005, applicant's petition under 37 CFR 1.10(e) was **GRANTED**. However, the last page of the petition decision included a typographical error. Specifically, the decision identified the date under 35 U.S.C. 371(c)(1), (c)(2), and (c)(4) as 13 September 2003. The correct date under 35 U.S.C. 371(c)(1), (c)(2), and (c)(4) is 19 September 2003.

Accordingly, the decision mailed 31 May 2005 is hereby corrected to the extent that the correct date under 35 U.S.C. 371(c)(1), (c)(2), and (c)(4) is identified as **19 September 2003.**

For all other purposes, the decision mailed 31 May 2005 remains in force.

On 08 August 2005, the DO/EO/US mailed a Notification Of Acceptance (Form PCT/DO/EO/903) that identified the "Date Of Receipt Of 35 U.S.C. 371(c)(1), (c)(2), and (c)(4) Requirements" and the "Date Of Completion Of All 35 U.S.C. 371 Requirements" as 14 March 2005.[1] The filing receipt mailed on the same date also identified the 35 U.S.C. 371 date as 14 March 2005.

Based on the above correction to the decision mailed 31 May 2005, the correct "Date Of Receipt Of 35 U.S.C. 371(c)(1), (c)(2), and (c)(4) Requirements" and "Date Of Completion Of All 35 U.S.C. 371 Requirements" for the present application is 19 September 2003. The Notification Of Acceptance and filing receipt mailed 08 August 2005 are therefore appropriately **VACATED**. A corrected Notification Of Acceptance and filing receipt identifying the 35 U.S.C. 371 date as **19 September 2003** will be issued.

---

[1] This is the date that applicant first filed copies of the materials originally filed 19 September 2003, as part of the petition under 37 CFR 1.10(e) to confirm the 19 September 2003 filing date for such materials.

It is noted that the Notification Of Acceptance mailed 08 August 2005 identified the receipt date of the various materials included with the petition (i.e., the basic national fee, the preliminary amendment, the oath or declaration, etc.) as 14 March 2005. Based on the 31 May 2005 decision granting applicant's petition under 37 CFR 1.10(e), these materials are treated as having been originally filed on 19 September 2003. The receipt dates for these items will also be corrected to **19 September 2003** in the revised Notification Of Acceptance.

This application is being forwarded to the DO/EO/US for further processing in accordance with the 31 May 2005 decision, as corrected herein.

Richard M. Ross
Attorney Advisor
Office Of PCT Legal Administration
Tel.: 571-272-3296
Facsimile: 571-273-0459

UNITED STATES PATENT AND TRADEMARK OFFICE

Commissioner for Patents
United States Patent and Trademark Office
P.O. Box 1450
Alexandria, VA 22313-1450
www.uspto.gov

0 9 AUG 2007

TOWNSEND M. BELSER, JR.
NEXSEN PRUET ADAMS KLEEMEIER, LLC
PO DRAWER 2426
COLUMBIA SC 29202-2426

| | |
|---|---|
| In re Application of:<br>MONNIER, Jean-Luc, et al.<br>U.S. Application No.: 10/527,897<br>PCT No.: PCT/CH02/00150<br>International Filing Date: 13 March 2002<br>Priority Date: 20 March 2001<br>Atty Docket No.: GLN-032US<br>For: DEVICE FOR LIMITING ACCESS TO A CONFINED SPACE | DECISION ON PETITION<br>(37 CFR 1.181) |

This decision is issued in response to the "Request For Pair Correction" filed by applicants on 07 August 2007, treated herein as a petition under 37 CFR 1.181 to correct the international application number for the present application. No petition fee is required.

## DISCUSSION

Based on a review of the application file, it is concluded that the materials filed by applicant to initiate the present national stage application properly identified the present application as the U.S. national stage of PCT/CH02/00150. The identification of the present application in USPTO records as the U.S. national stage of PCT/GH02/00150 is therefore in error.

The Notification Of Acceptance (Form PCT/DO/EO/903) and filing receipt mailed 26 August 2005, both of which incorrectly identify the present application as the U.S. national stage of PCT/GH02/00150, are appropriately vacated.

USPTO records will be corrected to properly identify the present application as the U.S. national stage of PCT/CH02/00150, and a corrected Notification Of Acceptance and filing receipt will be issued.

## CONCLUSION

Applicants' petition under 37 CFR 1.181 is **GRANTED**.

The Notification of Acceptance (Form PCT/DO/EO/903) and filing receipt mailed 26 August 2005 are hereby **VACATED**.

The application is being referred to the National Stage Processing Branch of the International Division for further processing in accordance with this decision, including the mailing of a corrected Notification Of Acceptance (Form PCT/DO/EO/903) and filing receipt which properly identify the present application as the U.S. national stage of PCT/CH02/00150.

Richard M. Ross
PCT Petitions Attorney
Office Of PCT Legal Administration
Telephone: (571) 272-3296
Facsimile: (571) 273-0459

UNITED STATES PATENT AND TRADEMARK OFFICE

COMMISSIONER FOR PATENTS
UNITED STATES PATENT AND TRADEMARK OFFICE
P.O. BOX 1450
ALEXANDRIA, VA 22313-1450
www.uspto.gov

31 OCT 2006

PERMAN & GREEN
425 POST ROAD
FAIRFIELD, CT 06824

| | | |
|---|---|---|
| In re Application of HAISCH | : | |
| U.S. Application No.: 10/527,898 | : | |
| PCT Application No.: PCT/EP2002/010285 | : | |
| Int. Filing Date: 13 September 2002 | : | DECISION |
| Priority Date Claimed: (none) | : | |
| Attorney Docket No.: 20020275-02 | : | |
| For: CODED POLARIZATION-DEPENDENT | : | |
| ANALYZING | : | |

This is in response to applicant's "Petition for Revival of an Application Abandoned Unintentionally Under 37 CFR 1.137(b)" filed 28 September 2006.

## BACKGROUND

On 13 September 2002, applicant filed international application PCT/EP2002/010285. A copy of the international application was communicated to the USPTO from the International Bureau on 25 March 2004. The thirty-month period for paying the basic national fee in the United States expired on 13 March 2005.

On 14 March 2005, applicant filed national stage papers in the United States Designated/Elected Office (DO/EO/US). The submission was accompanied by, *inter alia*, the basic national fee required by 35 U.S.C. 371(c)(1).

On 19 August 2005, the DO/EO/US mailed a Notification of Missing Requirements Under 35 U.S.C. 371 (Form PCT/DO/EO/905), which indicated that an oath or declaration in compliance with 37 CFR 1.497 must be filed.

On 09 August 2006, the DO/EO/US mailed a Notification of Abandonment (Form PCT/DO/EO/909), which indicated that the application is abandoned for failure to timely respond to the Notification of Missing Requirements.

On 28 September 2006, applicant filed the present petition under 37 CFR 1.137(b).

## DISCUSSION

Under 37 CFR 1.137(b), a petition requesting that an application be revived on the grounds of unintentional abandonment must be accompanied by: (1) the required reply unless previously filed, (2) the petition fee as set forth in 37 CFR 1.17(m), (3) a statement that the entire delay in filing the required reply from the due date for the reply until the filing of a grantable petition was unintentional, and (4) a terminal disclaimer if the application was filed before 08 June 1995.

With regard to item (1), applicant has provided the required reply under 35 U.S.C. 371.

With regard to item (2), applicant has provided the required petition fee.

With regard to item (3), the petition states, "The entire delay in filing a response to the Notice to File Missing Requirement mailed on 19 August 2005 for this application was unintentional." This statement is interpreted as a statement that the entire delay in filing the required reply from the due date for the reply until the filing of a grantable petition under 37 CFR 1.137(b) was unintentional. If this is an incorrect interpretation in view of the rules, petitioner is required to provide a statement to that effect.

With regard to item (4), because the international application was filed after 08 June 1995, no terminal disclaimer is required.

## CONCLUSION

For the reasons above, the petition under 37 CFR 1.137(b) is GRANTED.

The application has an International Filing Date under 35 U.S.C. 363 of 13 September 2002, and a date under 35 U.S.C. 371(c)(1), (c)(2), and (c)(4) of 28 September 2006.

This application is being forwarded to the United States Designated/Elected Office (DO/EO/US) for further processing in accordance with this decision.

Bryan Lin

Bryan Lin
PCT Legal Examiner
PCT Legal Office

Telephone: 571-272-3303
Facsimile: 571-273-0459

0 8 JUN 2007

UNITED STATES PATENT AND TRADEMARK OFFICE

Commissioner for Patents
United States Patent and Trademark Office
P.O. Box 1450
Alexandria, VA 22313-1450
www.uspto.gov

Agilent Technologies Inc.
Intellectual Property Administration, Legal Dept.
M/S BLDG. E.P.O. 7599
P.O. Box 7599
Loveland, CO 80537-0599

| | | |
|---|---|---|
| In re Application of<br>STEFFENS et al.<br>Application No.: 10/527,902<br>PCT No.: PCT/EP02/10286<br>Int. Filing Date: 13 September 2002<br>Priority Date: None<br>Attorney Docket No.: 20020304-2<br>For: CONTROL OF LASER TUNING VELOCITY | : | DECISION ON PETITION<br>UNDER 37 CFR 1.137(b)<br>&<br>REQUEST FOR REFUND |

This decision is in response to applicants' "Petition for Revival of an Application Abandoned Unintentionally under 37 CFR 1.137(b)" filed in the United States Patent and Trademark Office (USPTO) on 02 October 2006. Additionally, this decision is in response to applicants' "Petition for Refund to Deposit Account" filed 02 April 2007.

The petition under 37 CFR 1.137(b) is **GRANTED**.

Applicants' statement that the "the entire delay in filing the required reply from the due date for the reply until the filing of a grantable petition under 37 CFR 1.137(b) was unintentional" meets the requirements of 37 CFR 1.137(b)(3).

A review of the application file reveals that applicants have submitted an executed declaration/power of attorney and the requirements of 37 CFR 1.137(b) have been satisfied. Therefore, the request to revive the application abandoned under 35 U.S.C. 371(d) is granted as to the National stage in the United States of America.

Additionally, applicants request a refund of the extension of time fee charged to Deposit Account no. 16-1350 on 02 October 2006. The extension of time fee is not necessary and applicants are entitled to a refund of $1590. The request for refund under 37 CFR 1.26 is **GRANTED**.

This application is being returned to the United States Designated/Elected Office for processing in accordance with this decision.

Anthony Smith
Attorney-Advisor
Office of PCT Legal Administration
Telephone: (571) 272-3298
Facsimile: (571) 273-0459

UNITED STATES PATENT AND TRADEMARK OFFICE

Commissioner for Patents
United States Patent and Trademark Office
P.O. Box 1450
Alexandria, VA 22313-1450
www.uspto.gov

FITCH EVEN TABIN AND FLANNERY
120 SOUTH LA SALLE STREET
SUITE 1600
CHICAGO IL 60603-3406

COPY MAILED

NOV 29 2006

OFFICE OF PETITIONS

| | | |
|---|---|---|
| In re Application of | : | |
| Gunter Ziegler, et al. | : | |
| Application No. 10/527,921 | : | DECISION ON PETITION |
| Filed: March 16, 2005 | : | TO WITHDRAW |
| Attorney Docket No. 85162 | : | FROM RECORD |
| | : | |

This is a decision on the Request to Withdraw as attorney or agent of record under 37 C.F.R. § 1.36(b) filed August 28, 2006.

The request is **APPROVED**.

A grantable request to withdraw as attorney/agent of record must be signed by every attorney/agent seeking to withdraw or contain a clear indication that one attorney is signing on behalf of another/others. A request to withdraw will not be approved unless at least 30 (thirty) days would remain between the date of approval and the later of the expiration date of a time to file a response or the expiration date of the maximum time period which can be extended under 37 C.F.R. § 1.136(a).

The request was signed by Scott J. Menghini on behalf of all attorneys of record who are associated with customer No. 22242.

All attorneys/agents associated with the Customer Number 22242 have been withdrawn.

Applicant is reminded that there is no attorney of record at this time.

The request to change the correspondence of record is not acceptable as the requested correspondence address is not that of: (1) the first named signing inventor; or (2) an intervening assignee of the entire interest under 37 C.F.R 3.71. All future communications from the Office will be directed to the first named signing inventor at the first copied address below until otherwise properly notified by the applicant.

Telephone inquiries concerning this decision should be directed to April Wise at 571-272-1642.

April M. Wise
Petitions Examiner
Office of Petitions

cc: Gunter Ziegler
Ludwig – Thoma Str 36C
95447 Bayreuth
Germany

cc: Biotechnology Law Group
527 N. Highway 101
Suite E
Solana Beach, CA 92075

UNITED STATES PATENT AND TRADEMARK OFFICE

COMMISSIONER FOR PATENTS
UNITED STATES PATENT AND TRADEMARK OFFICE
P.O. BOX 1450
ALEXANDRIA, VA 22313-1450
www.uspto.gov

**COPY MAILED**

MAR 23 2009

**OFFICE OF PETITIONS**

Siemens Corporation
Intellectual Property Department
170 Wood Avenue South
Iselin NJ 08830

In re Application of
Heller, et al.
Application No. 10/527,927
Filed: October 11, 2005
Atty. Dkt. No: 2002P13477WOUS

: DECISION ON PETITION

This decision is in response to the petition to revive under 37 CFR 1.137(a), filed February 18, 2009.

The petition under 37 CFR 1.137(a) to withdraw the holding of abandonment is hereby **DISMISSED**.

Any request for reconsideration of this decision must be submitted within **TWO (2) MONTHS** from mail date of this decision. Extensions of time under 37 CFR 1.136(a) are permitted. The reconsideration request should include a cover letter entitled "Renewed Petition under 37 CFR 1.137(a)." This is not a final agency decision.

The application became abandoned January 8, 2009 for failure to timely submit a proper reply to the Notice of Allowance and Issue Fee(s) Due (Notice) October 7, 2008. The Notice set a three month statutory period of time for reply. Notice of Abandonment was mailed January 30, 2009.

Petitioners assert non-receipt of the Notice. The declaration of Tracey Daniel indicates a search of the file jacket and docket record where the non-received Office communication would have been stored and entered was made and the search indicates that the Office communication was not received. Declarant indicates she reviewed the docket and electronic file jacket and Janet D. Hood (agent of record) informed her that Ms. Hood personally reviewed the physical file jacket. A copy of the docket record where the non-received Office communication would have been entered had it been received and docketed accompanies the petition.

The showing required to establish non-receipt of an Office communication must include a statement from the practitioner describing the system used for recording an Office action received at the correspondence address of record with the USPTO. The statement should establish that the docketing system is sufficiently reliable. It is expected that the record would include, but not be limited to, the application number, attorney docket number, the mail date of the Office action and the due date for the response. Practitioner must state that the Office action was not received at the correspondence address of record, and that a search of the practitioner's record(s), including any file jacket or the equivalent, and the application contents, indicates that the Office action was not received. A copy of the record(s) used by the practitioner where the

non-received Office action would have been entered had it been received is required. A copy of the practitioner's record(s) required to show non-receipt of the Office action should include the master docket for the firm. That is, if a three month period for reply was set in the non-received Office action, a copy of the master docket report showing all replies docketed for a date three months from the mail date of the non-received Office action must be submitted as documentary proof of non-receipt of the Office action. If no such master docket exists, the practitioner should so state and provide other evidence such as, but not limited to, the following: the application file jacket; incoming mail log; calendar; reminder system; or the individual docket record for the application in question.

The instant petition does not establish non-receipt of the Notice in compliance with the procedures set forth at MPEP 711.03(c). Specifically, the petition fails to describe the system used for recording an Office action received at the correspondence address of record. Further, the copy of the docket record submitted with the petition does not appear to be a "master docket." Further, the copy of the docket record is illegible. In view thereof, it cannot be found that practitioner's docketing system is sufficiently reliable.

Any renewed petition must establish non-receipt of the Notice as set forth at MPEP 711.03(c).

**ALTERNATE VENUE**

Petitioners may wish to consider filing a petition stating that the delay was unintentional. Petitioner's attention is directed to 37 CFR 1.137(b) which provides for the revival of an "unintentionally" abandoned application without a showing that the delay in prosecution or in late payment of an issue fee was "unavoidable". An "unintentional" petition under 37 CFR 1.137(b) must be accompanied by the required petition fee and reply.

The filing of a petition under 37 CFR 1.137(b) cannot be intentionally delayed and therefore must be filed promptly. A person seeking revival due to unintentional delay cannot make a statement that the delay was unintentional unless the entire delay, including the delay from the date it was discovered that the application was abandoned until the filing of the petition to revive under 37 CFR 1.137(b), was unintentional. A statement that the delay was unintentional is not appropriate if petitioner intentionally delayed the filing of a petition for revival under 37 CFR 1.137(b).

Further correspondence with respect to this matter should be addressed as follows:

| | |
|---|---|
| By mail: | **Mail Stop Petition**<br>Commissioner for Patents<br>P.O. Box 1450<br>Alexandria, VA 22313-1450 |
| By facsimile: | (571) 273-8300 |
| By hand delivery: | U.S. Patent and Trademark Office<br>Customer Window, **Mail Stop Petition** |

Randolph Building
401 Dulany Street
Alexandria, VA 22314

Telephone inquiries concerning this matter may be directed to the undersigned at (571) 272-3205.

*/ALESIA M. BROWN/*

Alesia M. Brown
Petitions Attorney
Office of Petitions

UNITED STATES PATENT AND TRADEMARK OFFICE

Commissioner for Patents
United States Patent and Trademark Office
P.O. Box 1450
Alexandria, VA 22313-1450
www.uspto.gov

MAILED

MAR 10 2010

OFFICE OF PETITIONS

Siemens Corporation
Intellectual Property Department
170 Wood Avenue South
Iselin NJ 08830

| | |
|---|---|
| In re Application of | : |
| Heller, et al. | : DECISION ON PETITION |
| Application No. 10/527,927 | : |
| Filed: October 11, 2005 | : |
| Atty. Dkt. No: 2002P13477WOUS | : |

This decision is in response to the renewed petition to revive under 37 CFR 1.137(a), filed May 26, 2009.

The petition under 37 CFR 1.137(a) to withdraw the holding of abandonment is hereby **GRANTED**.

The application became abandoned January 8, 2009 for failure to timely submit a proper reply to the Notice of Allowance and Issue Fee(s) Due (Notice) October 7, 2008. The Notice set a three month statutory period of time for reply. Notice of Abandonment was mailed January 30, 2009. A petition under 37 CFR 1.137(a) was filed February 18, 2009 and dismissed March 23, 2009.

The petition satisfies the requirements of 37 CFR 1.137(a) in that petitioner has supplied (1) the required reply; (2) the required petition fee; and (3) a showing to the satisfaction of the Director that the entire delay was unavoidable.

This application is being referred to Office of Data Management for further processing.

Telephone inquiries concerning this matter may be directed to the undersigned at (571) 272-3205.

*/ALESIA M. BROWN/*

Alesia M. Brown
Petitions Attorney
Office of Petitions

UNITED STATES PATENT AND TRADEMARK OFFICE

Commissioner for Patents
United States Patent and Trademark Office
P.O. Box 1450
Alexandria, VA 22313-1450
www.uspto.gov

COPY MAILED

NOV 0 5 2009

OFFICE OF PETITIONS

MULTICELL TECHNOLOGIES, INC.
C/O DAVID LEWIS
1250 AVIATION AVENUE, SUITE 200B
SAN JOSE, CA 95110

In re Application of
Adrian Bot, et al.
Application No. 10/527,931
Filed: August 26, 2005
Attorney Docket No. 8114-008-WO-US

ON PETITION

This is a decision in response to the petition, filed August 27, 2009, to revive the above-identified application under the provisions of 37 CFR 1.137(b).

The petition is **GRANTED**.

The application became abandoned for failure to reply in a timely manner to the non-final Office action mailed January 28, 2008, which set a shortened statutory period for reply of three (3) months. No extension of time under the provisions of 37 CFR 1.136(a) was obtained. Accordingly, the application became abandoned on April 29,, 2009. A Notice of Abandonment was mailed on August 6, 2008. On August 27, 2009, the present petition was filed.

The petition satisfies the requirements of 37 CFR 1.137(b) in that petitioner has supplied (1) the reply in the form of an amendment; (2) the petition fee of $810; and (3) an adequate statement of unintentional delay[1].

The application is being referred to Technology Center AU 1633 for appropriate action by the Examiner in the normal course of business on the amendment received August 27, 2009.

Telephone inquiries concerning this decision should be directed to the undersigned at (571) 272-3204. Inquiries relating to further prosecution should be directed to the Technology Center.

Sherry D. Brinkley
Petitions Examiner
Office of Petitions

[1] 37 CFR 1.137(b)(3) requires a statement that the entire delay in filing the required reply from the due date for the reply until the filing of a grantable petition pursuant to 37 CFR 1.137(b) was unintentional. While it is not apparent whether the person signing the statement of unintentional delay was in a position to have firsthand or direct knowledge of the facts and circumstances of the delay at issue, such statement is being treated as having been made as the result of a reasonable inquiry into the facts and circumstances of such delay. See 37 CFR 10.18(b) and Changes to Patent Practice and Procedure; Final Rule Notice, 62 Fed. Reg. 53131, 53178 (October 10, 1997), 1203 Off. Gaz. Pat. Office 63, 103 (October 21, 1997). In the event that such an inquiry has not been made, petitioner must make such an inquiry. If such inquiry results in the discovery that it is not correct that the entire delay in filing the required reply from the due date for the reply until the filing of a grantable petition pursuant to 37 CFR 1.137(b) was unintentional, petitioner must notify the Office.

28 JUL 2005

UNITED STATES PATENT AND TRADEMARK OFFICE

#3

COMMISSIONER FOR PATENTS
UNITED STATES PATENT AND TRADEMARK OFFICE
P.O. BOX 1450
ALEXANDRIA, VA 22313-1450
www.uspto.gov

HAMILTON, BROOK, SMITH & REYNOLDS, P.C.
530 VIRGINIA ROAD
P.O. BOX 9133
CONCORD, MA 01742-9133

| | |
|---|---|
| In re Application of<br>TULLY, Timothy et al.<br>Application No.: 10/527,950<br>PCT No.: PCT/US03/25942<br>Int. Filing Date: 19 August 2003<br>Priority Date: 19 August 2002<br>Docket No.: 2826.1000-005<br>For: SCREENING METHODS FOR COGNITIVE ENHANCERS | DECISION<br><br>ON PETITION UNDER<br><br>37 CFR 1.137(b) |

Applicant's "Petition For Revival of an International Application For Patent Designating the U.S. Abandoned Unintentionally Under 37 CFR 1.137(b)," filed in the above-captioned application on 15 March 2005 is **GRANTED**.

Applicant's statement that "the entire delay in filing the required reply from the due date for the required reply until the filing of a grantable petition under 37 CFR 1.137(b) was unintentional," satisfies 37 CFR 1.137(b)(3). The petition fee and basic national fee have been submitted. A terminal disclaimer is not required as the application was filed on or after 08 June 1995. Accordingly, all requirements under 37 CFR 1.137(b) have been satisfied.

A signed oath or declaration has not yet been submitted.

This application is being forwarded to the National Stage Processing Branch of the Office of PCT Operations for continued processing in accordance with this decision, including the mailing of a Notification of Missing Requirements (Form PCT/DO/EO/905) indicating that an oath or declaration in compliance with 37 CFR 1.497(a)-(b) and the surcharge for late filing of the oath or declaration are required.

Erin P. Thomson

Erin P. Thomson
Attorney Advisor
PCT Legal Administration

Telephone: 571-272-3292
Facsimile: 571-273-0459

UNITED STATES PATENT AND TRADEMARK OFFICE

Commissioner for Patents
United States Patent and Trademark Office
P.O. Box 1450
Alexandria, VA 22313-1450
www.uspto.gov

HELLER EHRMAN LLP
4350 LA JOLLA VILLAGE DRIVE
7TH FLOOR
SAN DIEGO, CA 92122

**COPY MAILED**

NOV 10 2008

| | | |
|---|---|---|
| In re Application of | : | |
| Timothy P. Tully, et al. | : | |
| Application No. 10/527,950 | : | DECISION ON PETITION |
| Filed: September 30, 2005 | : | TO WITHDRAW |
| Attorney Docket No. 43373-0004 | : | FROM RECORD |
| | : | |

This is a decision on the Request to Withdraw as attorney or agent of record under 37 C.F.R. § 1.36(b), filed April 10, 2008.

The request is **DISMISSED** as moot.

A review of the file record indicates that the power of attorney to Heller Ehrman, LLP has been revoked by the assignee of the patent application on July 17, 2008. Accordingly, the request to withdraw under 37 C.F.R. § 1.36(b) is moot.

All future communications from the Office will continue to be directed to the below-listed address until otherwise notified by applicant.

Telephone inquires concerning this decision should be directed to undersigned at 571-272- 1642.

/AMW/
April M. Wise
Petitions Examiner
Office of Petitions

cc: DON J. PELTO
SHEPPARD, MULLIN, RICHTER & HAMPTON, LLP
1300 I STREET, NW
11TH FLOOR EAST
WASHINGTON DC 20005

UNITED STATES PATENT AND TRADEMARK OFFICE

Commissioner for Patents
United States Patent and Trademark Office
P.O. Box 1450
Alexandria, VA 22313-1450
www.uspto.gov

PHILIPS INTELLECTUAL PROPERTY & STANDARDS
P.O. BOX 3001
BRIARCLIFF MANOR, NY 10510

COPY MAILED

MAR 30 2009

OFFICE OF PETITIONS

In re Application of
Ercan Ferit Gigi
Application No. 10/527,951
Filed: March 15, 2005
Attorney Docket No. NL02 0900 US

ON PETITION

This is a decision on the petition filed September 18, 2008 under 37 CFR 1.137(b), to revive the above-identified application.

The petition is **GRANTED.**

The above-identified application became abandoned for failure to submit the Issue fee in a timely manner in reply to the Notice of Allowance mailed June 16, 2008, which set a statutory period for reply of three (3) months. Accordingly, the above-identified application became abandoned on September 17, 2008.

The petition satisfies the conditions for revival pursuant to the provisions of 37 CFR 1.137(b) in that (1) the reply in the form of payment of the Issue fee; (2) the petition fee; (3) the required statement of unintentional delay have been received. Accordingly, the issue fee is accepted as having been unintentionally delayed.

Telephone inquiries concerning this decision should be directed to the undersigned at (571) 272-3210.

This matter is being referred to the Office of Data Management for further processing.

Irvin Dingle
Petitions Examiner
Office of Petitions

UNITED STATES PATENT AND TRADEMARK OFFICE

Commissioner for Patents
United States Patent and Trademark Office
P.O. Box 1450
Alexandria, VA 22313-1450
www.uspto.gov

**Patent, Copyright & Trademark Law Group**
**430 White Pond Drive**
**Suite 200**
**Akron, OH 44320**

**COPY MAILED**

OCT 3 1 2007

**OFFICE OF PETITIONS**

| | | |
|---|---|---|
| In re Application of | : | |
| Alexey Alexandrovich et al. | : | |
| Application No. 10/527,966 | : | DECISION ON PETITION |
| Filed: October 20, 2005 | : | |
| Attorney Docket No. 05-1576 | : | |

This is a decision on the petition under 37 CFR 1.137(b), filed September 24, 2007, to revive the above-identified application.

The petition is **GRANTED**.

This application became abandoned for failure to timely pay the issue and publication fees on or before July 24, 2007, as required by the Notice of Allowance and Fee(s) Due, mailed April 24, 2007. Accordingly, the date of abandonment of this application is July 25, 2007. A Notice of Abandonment was mailed on August 17, 2007.

The petition satisfies the requirements of 37 CFR 1.137(b) in that petitioner has supplied (1) the reply in the form of payment of the issue fee of $700.00 and the publication fee of $300, (2) the petition fee of $750.00, and (3) a proper statement of unintentional delay. Accordingly, the issue and publication fees are accepted as being unintentionally delayed.

Telephone inquiries concerning this decision should be directed to Kimberly Inabinet at (571) 272-4618.

This application is being referred to Publishing Division for appropriate processing in accordance with this decision on petition.

Frances Hicks

Frances Hicks
Petitions Examiner
Office of Petitions

08 SEP 2005

#5

UNITED STATES PATENT AND TRADEMARK OFFICE

Commissioner for Patents
United States Patent and Trademark Office
P.O. Box 1450
Alexandria, VA 22313-1450
www.uspto.gov

Evan R. Witt
Madson & Metcalf
15 West South Temple
Suite 900
Salt Lake City, Utah 84101

In re Application of
LEE, Paul Bernard
Application No.: 10/527,969
PCT No.: PCT/GB03/03770
Int. Filing Date: 29 August 2003
Priority Date: 03 September 2002
Attorney Docket No.: 1512.2.147
For: DART-OPERATED BIG BORE BY-PASS VALVE

DECISION ON PETITION
UNDER 37 CFR 1.137(b)

The petition to revive under 37 CFR 1.137(b) filed 15 March 2005 in the above-captioned application is hereby **GRANTED** as follows:

Applicant's statement that "the entire delay in filing the required reply from the due date for the reply until the filing of a grantable petition under 37 CFR 1.137(b) was unintentional" meets the requirements of 37 CFR 1.137(b)(3).

A review of the application file reveals that applicant has submitted the basic national fee and the requirements of 37 CFR 1.137(b) have been satisfied. Therefore, the request to revive the application abandoned under 35 U.S.C. 371(d) is granted as to the National stage in the United States of America.

This application is being forwarded to the United States Designated/Elected Office (US/DO/EO) for continued processing including the issuance of a Notification of Missing Requirements (Form PCT/DO/EO/905) indicating that an oath or declaration along with the $65 surcharge for filing the oath or declaration after the thirty-month period is required.

Anthony Smith

Anthony Smith
Attorney-Advisor
Office of PCT Legal Administration
Tel.: 571-272-3298
Facsimile: 571-273-0459

UNITED STATES PATENT AND TRADEMARK OFFICE

Commissioner for Patents
United States Patent and Trademark Office
P.O. Box 1450
Alexandria, VA 22313-1450
www.uspto.gov

Thomas H. Osborn
OTIS ELEVATOR COMPANY
INTELLECTUAL PROPERTY DEPARTMENT
10 Farm Springs
Farmington, CT 06032

**COPY MAILED**

MAR 1 1 2008

**OFFICE OF PETITIONS**

In re Application of :
Luiz Bacellar *et al.* :
Application No. 10/527,974 : ON PETITION
Filed: August 11, 2005 :
Attorney Docket No. OT-4967 :

This is a decision on the petition under the unintentional provisions of 37 CFR 1.137(b), filed 11 February 2008, to revive the above-identified application.

The petition is **DISMISSED**.

Any request for reconsideration of this decision must be submitted within TWO (2) MONTHS from the mail date of this decision. Extensions of time under 37 CFR 1.136(a) are permitted. The reconsideration request should include a cover letter entitled "Renewed Petition under 37 CFR 1.137(b)." This is **not** a final agency action within the meaning of 5 U.S.C. § 704.

The application became abandoned for failure s to timely pay the issue and publication fees on or before 27 December 2007, as required by the Notice of Allowance and Fee(s) Due, mailed on 27 September 2007, which set a statutory period for reply of three (3) months. Accordingly, the application became abandoned on 28 December 2007.

A grantable petition under 37 CFR 1.137(b) must be accompanied by: (1) the required reply, unless previously filed; (2) the petition fee as set forth in 37 CFR 1.17(m); (3) a statement that the entire delay in filing the required reply from the due date for the reply until the filing of a grantable petition pursuant to 37 CFR 1.137(b) was unintentional; and (4) any terminal disclaimer (and fee as set forth in 37 CFR 1.20(d)) required by 37 CFR 1.137(d). Where there is a question as to whether either the abandonment or the delay in filing a petition under 37 CFR 1.137 was unintentional, the Director may require additional information. See MPEP 711.03(c)(II)(C) and (D). The instant petition lacks item(s) (1).

The payment submitted by the petitioner is insufficient to cover the issue fee of $1,440.00 and the publication fee of $300.00.

Further correspondence with respect to this matter should be addressed as follows:

By Mail: Mail Stop PETITION
Commissioner for Patents
P. O. Box 1450
Alexandria, VA 22313-1450

By hand: U. S. Patent and Trademark Office
Customer Service Window, Mail Stop Petitions
Randolph Building
401 Dulany Street
Alexandria, VA 22314

The centralized facsimile number is **(571) 273-8300.**

Telephone inquiries concerning this decision should be directed to Allen C. Ho at (571) 272-6052.

David Bucci
Petitions Examiner
Office of Petitions

UNITED STATES PATENT AND TRADEMARK OFFICE

Commissioner for Patents
United States Patent and Trademark Office
P.O. Box 1450
Alexandria, VA 22313-1450
www.uspto.gov

**OTIS ELEVATOR COMPANY**
**INTELLECTUAL PROPERTY DEPARTMENT**
**10 FARM SPRINGS**
**FARMINGTON CT 06032**

**COPY MAILED**

AUG 0 8 2008

| | | |
|---|---|---|
| In re Application of | : | |
| Luiz **Bacellar** et al. | : | |
| Application No. 10/527,974 | : | DECISION ON PETITION |
| Filed: August 11, 2005 | : | |
| Attorney Docket No. OT-4967 | : | |

This is a decision on the renewed petition under the unintentional provisions of 37 CFR 1.137(b), filed July 11, 2008, to revive the above-identified application.

The petition is **GRANTED**.

This application became abandoned for failure to timely pay the issue and publication fees on or before December 27, 2007, as required by the Notice of Allowance and Fee(s) Due, mailed September 27, 2007. Accordingly, the date of abandonment of this application is December 28, 2007.

The renewed petition satisfies the requirements of 37 CFR 1.137(b) in that petitioner has supplied (1) the reply in the form of payment of the issue fee of $1440.00 and the publication fee of $300.00, (2) the petition fee of $1540.00; and (3) a proper statement of unintentional delay.

Telephone inquiries concerning this decision should be directed to Phyllis Spivack at 571-272-6051 or in her absence, to the undersigned at (571) 272-7099.

This application is being referred to the Office of Data Management for processing into a patent.

for David Bucci
Petitions Examiner
Office of Petitions

UNITED STATES PATENT AND TRADEMARK OFFICE

Commissioner for Patents
United States Patent and Trademark Office
P.O. Box 1450
Alexandria, VA 22313-1450
www.uspto.gov

Paper No.

JACOBSON HOLMAN PLLC
400 SEVENTH STREET N.W.
SUITE 600
WASHINGTON DC 20004

COPY MAILED
MAR 28 2008
OFFICE OF PETITIONS

| | | |
|---|---|---|
| In re Application of | : | |
| Helene Le Buannec et al. | : | |
| Application No. 10/527,975 | : | DECISION ON PETITION |
| Filed: March 15, 2005 | : | PURSUANT TO |
| Attorney Docket No.: P70484US0 | : | 37 C.F.R. § 1.137(B) |
| Title: STABLE IMMUNOGENIC | : | |
| PRODUCT COMPRISING ANTIGENIC | : | |
| HETEROCOMPLEXES | : | |

This is a decision on the petition pursuant to 37 C.F.R. § 1.137(b)[1], filed January 31, 2008, to revive the above-identified application.

This petition pursuant to 37 C.F.R. § 1.137(b) is **GRANTED**.

The above-identified application became abandoned for failure to reply in a timely manner to the non-final Office action, mailed January 23, 2007, which set a shortened statutory period for reply of three months. No response was received, and no extensions of time under the provisions of 37 C.F.R. § 1.136(a) were requested. Accordingly, the above-identified application

1 A grantable petition pursuant to 37 C.F.R § 1.137(b) must be accompanied by:

(1) The reply required to the outstanding Office action or notice, unless previously filed;
(2) The petition fee as set forth in 37 C.F.R § 1.17(m);
(3) A statement that the entire delay in filing the required reply from the due date for the reply until the filing of a grantable petition pursuant to this paragraph was unintentional. The Commissioner may require additional information where there is a question whether the delay was unintentional, and;
(4) Any terminal disclaimer (and fee as set forth in 37 C.F.R § 1.20(d)) required pursuant to paragraph (d) of this section.

became abandoned on April 24, 2007. A notice of abandonment was mailed on August 14, 2007.

With this petition, Petitioner has submitted, *inter alia*, the petition fee, the proper statement of unintentional delay, and an amendment. A terminal disclaimer is not required.

As such, the first three requirements of Rule 1.137(b) have been met. The fourth requirement is not applicable.

The Technology Center will be notified of this decision. The Technology Center's support staff will notify the Examiner of this decision, so that the amendment that was filed concurrently with this petition can be processed.

Telephone inquiries regarding *this decision* should be directed to the undersigned at (571) 272-3225[2]. All other inquiries concerning examination procedures or status of the application should be directed to the Technology Center.

/Paul Shanoski/
Paul Shanoski
Senior Attorney
Office of Petitions

---

2 Petitioner will note that all practice before the Office should be in writing, and the action of the Office will be based exclusively on the written record in the Office. See 37 C.F.R. § 1.2. As such, Petitioner is reminded that no telephone discussion may be controlling or considered authority for Petitioner's further action(s).

UNITED STATES PATENT and TRADEMARK OFFICE

COMMISSIONER FOR PATENTS
UNITED STATES PATENT AND TRADEMARK OFFICE
P.O BOX 1450
ALEXANDRIA, VA 22313-1450
www.uspto.gov

31 MAR 2008

WENDEROTH, LIND & PONACK L.L.P.
2033 K. STREET, NW
SUITE 800
WASHINGTON, DC 20006

| | | |
|---|---|---|
| In re Application of | : | |
| YAMAHIRO et al | : | |
| Application No.: 10/528,001 | : | DECISION ON |
| PCT No.: PCT/JP2003/011856 | : | |
| Int. Filing Date: 17 September 2003 | : | PETITION |
| Priority Date: 17 September 2002 | : | |
| Attorney's Docket No.: 2005-0455A | : | UNDER 37 CFR 1.181 |
| For: SILICON COMPOUND | : | |

This decision is in response to the "REQUEST FOR CORRECTED NOTICE OF ACCEPTANCE," filed on 24 March 2008 which is being treated as a petition under 37 CFR 1.181 requesting that the 371(c)(1), (c)(2), and (c)(4) date of the above application be corrected to April 5, 2005.

## BACKGROUND

On 16 March 2005, applicants filed a transmittal letter for entry into the national stage in the United States which was accompanied by, inter alia, the requisite basic national fee as required by 35 U.S.C. 371(c)(1). However, no executed declaration or oath was filed on such date.

On 25 November 2005, the United States Designated/Elected Office (DO/EO/US) mailed a "NOTICE OF ACCEPTANCE OF APPLICATION UNDER 35 U.S.C. 371 AND 37 CFR 1.495" which informed applicants that the 371(c)(1), (c)(2) and (c)(4) and that the date of completion of all 35 U.S.C. 371 is 25 July 2005.

On 06 December 2006, applications filed a "REQUEST FOR CORRECTED FILING RECEIPT," stating that executed declaration was filed on 05 April 2005.

On 24 March 2008, applicants filed this petition indicating that the correct 35 U.S.C. 371 (c)(1), (c)(2), and (c)(4) date is 05 April 2005 as evidence by the USPTO stamped postcard.

## DISCUSSION

Applicant's present petition accompanied by a copy of the following documents, filed purportedly, *inter alia*, with the PTO as indicated in the itemized stamped postcard:

(1) Executed Declaration and Power of Attorney

The postcard lists the above items and bears a USPTO date of stamp as 05 April 2005.

MPEP 503 provides:

> A postcard receipt which itemizes and properly identifies the papers which are being filed serves as *prima facie* evidence of receipt in the PTO of all the items listed thereon on the date stamped thereon by the PTO.

Applicant's postcard is accepted as *prima facie* that the executed declaration was deposited with the U.S. Patent and Trademark Office on 05 April 2005.

Accordingly, the date of receipt for the executed declaration is **05 April 2005.**

## DECISION

The petition under 37 CFR 1.181 is **GRANTED.**

The Notification of Acceptance (Form PCT/DO/EO/903) mailed on **25 November 2005** is **VACATED** with the mailing of this decision.

This application is being returned to the United States Designated/Elected Office (DO/EO/US) for continued processing under 35 U.S.C. 371. The 35 USC 371(c)(1), (c)(2), and (c)(4) date of this application is **05 April 2005.**

Rafael Bacares
PCT Legal Examiner
PCT Legal Office
Telephone: (571) 272-3276
Facsimile: (571) 273-0459

UNITED STATES PATENT AND TRADEMARK OFFICE

Commissioner for Patents
United States Patent and Trademark Office
P.O. Box 1450
Alexandria, VA 22313-1450
www.uspto.gov

BIRCH STEWART KOLASCH & BIRCH
PO BOX 747
FALLS CHURCH, VA 22040-0747

COPY MAILED

OCT 2 4 2008

OFFICE OF PETITIONS

| | | |
|---|---|---|
| In re Application of | : | |
| Tomio Kuga | : | |
| Application No. 10/528,016 | : | DECISION GRANTING PETITION |
| Filed: March 16, 2005 | : | UNDER 37 CFR 1.313(c)(2) |
| Attorney Docket No. 1254-027PUS1 | : | |

This is a decision on the petition under 37 CFR 1.313(c)(2), filed October 23, 2008, to withdraw the above-identified application from issue after payment of the issue fee.

The petition is **GRANTED**.

The above-identified application is withdrawn from issue for consideration of a submission under 37 CFR 1.114 (request for continued examination). *See* 37 CFR 1.313(c)(2).

***Petitioner is advised that the issue fee paid on September 17, 2008 cannot be refunded. If, however, this application is again allowed, petitioner may request that it be applied towards the issue fee required by the new Notice of Allowance.***[1]

Telephone inquiries regarding this decision should be directed to undersigned at (571) 272-1642.

This application is being referred to Technology Center AU 2835 for processing of the request for continued examination under 37 CFR 1.114 and for consideration of the concurrently filed information disclosure statement.

/AMW/
April M. Wise
Petitions Examiner
Office of Petitions

---

[1] *The request to apply the issue fee to the new Notice may be satisfied by completing and returning the new Part B – Fee(s) Transmittal Form (along with any balance due at the time of submission). Petitioner is advised that the Issue Fee Transmittal Form must be completed and timely submitted to avoid abandonment of the application.*

UNITED STATES PATENT AND TRADEMARK OFFICE

UNITED STATES DEPARTMENT OF COMMERCE
United States Patent and Trademark Office
Address: COMMISSIONER FOR PATENTS
P.O. Box 1450
Alexandria, Virginia 22313-1450
www.uspto.gov

YOUNG & THOMPSON
209 Madison Street
Suite 500
Alexandria, VA 22314

Mail Date: 05/07/2010

| | | |
|---|---|---|
| **Applicant** | : Michiel Peter Oderwald | : DECISION ON REQUEST FOR |
| **Patent Number** | : 7614182 | : RECALCULATION of PATENT |
| **Issue Date** | : 11/10/2009 | : TERM ADJUSTMENT IN VIEW |
| **Application No** | : 10/528,026 | : OF WYETH AND NOTICE OF INTENT TO |
| **Filed** | : 09/27/2005 | : ISSUE CERTIFICATE OF CORRECTION |
| | | : |

The Request for Recalculation is **GRANTED** to the extent indicated.

The patent term adjustment has been determined to be **822** days. The USPTO will *sua sponte* issue a certificate of correction reflecting the amount of PTA days determined by the recalculation.

Prior to the issuance of the certificate of correction, the USPTO will afford patentee an opportunity to be heard and request reconsideration. Accordingly, patentee has **one month or thirty (30) days**, whichever is longer, to file a request for reconsideration of this patent term adjustment calculation. See 35 U.S.C. 154(b)(3)(B)(ii) and 37 CFR 1.322(a)(4). No extensions of time will be granted under 37 CFR 1.136.

Patentee should use document code PET.OP if electronically filing a request for reconsideration of this patent term adjustment calculation. The patentee must also include the information required by 37 CFR 1.705(b)(2) and the fee required by 37 CFR 1.18(e). If patentee does not file a timely request for reconsideration of this patent term adjustment calculation including the information required by 37 CFR 1.705(b)(2) and the fee required by 37 CFR 1.18(e), the USPTO will issue a certificate of correction reflecting the PTA determination noted above.

Patentee should be aware that in order to preserve the right to review in the United States District Court for the District of Columbia of the USPTO patent term adjustment determination, patentee must ensure that he or she also take the steps required under 35 U.S.C. 154(b)(4)(A) in a timely manner. Nothing in the request for recalculation should be construed as providing an alternative time frame for commencing a civil action under 35 U.S.C. 154(b)(4)(A).

Any questions concerning this decision should be directed to the Office of Patent Legal Administration at 571-272-7702.

UNITED STATES PATENT AND TRADEMARK OFFICE

Commissioner for Patents
United States Patent and Trademark Office
P.O. Box 1450
Alexandria, VA 22313-1450
www.uspto.gov

**ROBINS & PASTERNAK**
**1731 EMBARCADERO ROAD**
**SUITE 230**
**PALO ALTO, CA 94303**

COPY MAILED

SEP 0 8 2009

OFFICE OF PETITIONS

| | | |
|---|---|---|
| In re Application of | : | |
| Sung-Yun KWON | : | |
| Application No. 10/528,059 | : | DECISION ON PETITION |
| Filed: March 15, 2005 | : | TO WITHDRAW |
| Attorney Docket No. 4000-0002 | : | FROM RECORD |
| | : | |

This is a decision on the Request to Withdraw as attorney or agent under 37 C.F.R. § 1.36(b) filed July 24, 2009.

The request is **NOT APPROVED**.

The Office will no longer approve requests from practitioners to withdraw from applications where the requesting practitioner is acting, or has acted, in a representative capacity pursuant to 37 CFR 1.34. In these situations, the practitioner is responsible for the correspondence the practitioner files in the application while acting in a representative capacity. As such, there is no need for the practitioner to obtain the Office's permission to withdraw from representation. However, practitioners acting in a representative capacity, like practitioners who have a power of attorney in the application, remain responsible for noncompliance with 37 CFR 1.56, as well as 37 CFR 10.18, with respect to documents they file.

The address associated with the Customer Number in the Request is the address to be used for correspondence only.

A review of the file record indicates that Robert L. Robins does not have power of attorney in this patent application. See 37 C.F.R. § 10.40. Accordingly, the request to withdraw under 37 C.F.R. § 1.36(b) is not applicable.

All future communications from the Office will continue to be directed to the above-identified address until otherwise properly notified by the applicant.

Telephone inquires concerning this decision should be directed to the undersigned at 571-272-6735.

/Diane Goodwyn/
Diane Goodwyn
Petitions Examiner
Office of Petitions

cc: SUNG-YUN KWON
THERAJECT, INC.,
39270 PASEO PADRE,
SUITE 112
FREMONT, CA 94538

UNITED STATES PATENT AND TRADEMARK OFFICE

UNITED STATES DEPARTMENT OF COMMERCE
United States Patent and Trademark Office
Address: COMMISSIONER FOR PATENTS
P.O. Box 1450
Alexandria, Virginia 22313-1450
www.uspto.gov

SCHWEGMAN, LUNDBERG & WOESSNER, P.A.
P.O. BOX 2938
MINNEAPOLIS, MN 55402

Mail Date: 05/21/2010

| | | |
|---|---|---|
| **Applicant** | : Wilhelm Scherze | : DECISION ON REQUEST FOR |
| **Patent Number** | : 7635575 | : RECALCULATION of PATENT |
| **Issue Date** | : 12/22/2009 | : TERM ADJUSTMENT IN VIEW |
| **Application No** | : 10/528,060 | : OF WYETH AND NOTICE OF INTENT TO |
| **Filed** | : 03/15/2005 | : ISSUE CERTIFICATE OF CORRECTION |
| | | : |

The Request for Recalculation is **GRANTED** to the extent indicated.

The patent term adjustment has been determined to be **374** days. The USPTO will *sua sponte* issue a certificate of correction reflecting the amount of PTA days determined by the recalculation.

Prior to the issuance of the certificate of correction, the USPTO will afford patentee an opportunity to be heard and request reconsideration. Accordingly, patentee has **one month or thirty (30) days**, whichever is longer, to file a request for reconsideration of this patent term adjustment calculation. See 35 U.S.C. 154(b)(3)(B)(ii) and 37 CFR 1.322(a)(4). No extensions of time will be granted under 37 CFR 1.136.

Patentee should use document code PET.OP if electronically filing a request for reconsideration of this patent term adjustment calculation. The patentee must also include the information required by 37 CFR 1.705(b)(2) and the fee required by 37 CFR 1.18(e). If patentee does not file a timely request for reconsideration of this patent term adjustment calculation including the information required by 37 CFR 1.705(b)(2) and the fee required by 37 CFR 1.18(e), the USPTO will issue a certificate of correction reflecting the PTA determination noted above.

Patentee should be aware that in order to preserve the right to review in the United States District Court for the District of Columbia of the USPTO patent term adjustment determination, patentee must ensure that he or she also take the steps required under 35 U.S.C. 154(b)(4)(A) in a timely manner. Nothing in the request for recalculation should be construed as providing an alternative time frame for commencing a civil action under 35 U.S.C. 154(b)(4)(A).

Any questions concerning this decision should be directed to the Office of Patent Legal Administration at 571-272-7702.

28 JUN 2007

UNITED STATES PATENT AND TRADEMARK OFFICE

Commissioner for Patents
United States Patent and Trademark Office
P.O. Box 1450
Alexandria, VA 22313-1450
www.uspto.gov

HARNESS, DICKEY & PIERCE, P.L.C.
P.O.BOX 8910
RESTON VA 20195

| | |
|---|---|
| In re Application of<br>OSKARSSON et al.<br>Application No.: 10/528,063<br>PCT No.: PCT/SE03/01444<br>Int. Filing Date: 16 September 2003<br>Priority Date: 16 September 2002<br>Attorney's Docket No.: 10400-000147/US<br>For: WELDING ELECTRODE AND DEVICE FOR ITS MANUFACTURE | DECISION ON PETITION<br><br>UNDER 37 CFR 1.181 |

This is in response to applicant's "Petition under 37 CFR 1.181 to Withdraw Holding of Abandonment", filed in the United States Patent and Trademark Office (USPTO) on 01 June 2007 alleging that applicant did not receive the Notification of Missing Requirements mailed on 09 January 2006.

## BACKGROUND

A review of the application file reveals that the NOTIFICATION OF MISSING REQUIREMENTS was mailed by the USPTO on 09 January 2006. The notification indicated that an oath or declaration in compliance with 37 CFR 1.497(a) and (b) was required. Applicant was given two months to respond to the Notification or until 09 March 2006 with extensions of time (up to 5 months) available under 37 CFR 1.136(a). No response to the Notification of Missing Requirements was received and the application went abandoned.

On 01 June 2007, applicant filed the instant petition to withdraw the holding of abandonment along with a response to the Notification of Missing Requirements.

## DISCUSSION

In order to establish that papers were not received, a petition under 37 CFR 1.181 with a proper showing is required. As set forth in the Official Gazette at 1156 OG 53, the petition must include the following: (1) a statement by the practitioner that the Office action was not received by the practitioner; (2) a statement attesting that a search of the file jacket and docket records indicates that the Office action was not received; and (3) a copy of the docket record where the non-received Office action would have been entered had it been received (the docket records must also be referenced in practitioner's statement). No petition fee is required.

Item (1) is satisfied with Practitioner's statement that the "Notification of Missing Requirements was never received." Item (2) is satisfied by the practitioner's statement attesting that a search of the file jacket and docket records indicated that the Office action was not received.

With regard to Item (3), applicant has provided the appropriate docket record for establishing nonreceipt of an Office communication, the record where all USPTO responses dues on the due date for reply to the communication at issue (i.e., a listing of all replies due in the USPTO on 09 March 2006 for the present case) would be entered had it been received. Thus, applicant has provided the proper showing necessary to withdraw the holding of abandonment and the petition may be properly granted at this time.

A review of the executed declaration submitted on 01 June 2007 indicates that it is in compliance with 37 CFR 1.497(a) and (b) and acceptable.

## CONCLUSION

Applicant's petition under 37 CFR 1.181 to request to withdraw holding of abandonment is **GRANTED**.

The application will be forwarded to the United States Designated/Elected Office for further processing. The 35 U.S.C. 371(c)(1), (c)(2) and (c)(4) date is 201 June 2007.

Cynthia M. Kratz
Attorney Advisor
Office of PCT Legal Administration

Telephone: (571) 272-3286
Facsimile: (571) 272-0459

03 MAR 2006

#5

UNITED STATES PATENT AND TRADEMARK OFFICE

Commissioner for Patents
United States Patent and Trademark Office
P.O. Box 1450
Alexandria, VA 22313-1450
www.uspto.gov

OLIFF & BERRIDGE, PLC
P.O. BOX 19928
ALEXANDRIA VA 22320

| | | |
|---|---|---|
| In re Application of | : | |
| NAKAMURA et al. | : | |
| Application No.: 10/528,069 | : | DECISION |
| PCT No.: PCT/JP03/12353 | : | |
| Int. Filing Date: 26 September 2003 | : | |
| Priority Date: 27 September 2002 | : | |
| Attorney Docket No.: 122733 | : | |
| For: THERMAL TREATMENT APPARATUS, | : | |
| METHOD FOR MANUFACTURING | : | |
| SEMICONDUCTOR DEVICE, AND METHOD | : | |
| FOR MANUFACTURING SUBSTRATE | : | |

This is a decision on applicants' petition under 37 CFR 1.47(a) filed 07 October 2005 in the United States Patent and Trademark Office (USPTO).

## BACKGROUND

On 26 September 2003, applicants filed international application PCT/JP03/12353, which designated the United States and claimed a priority date of 27 September 2002. A copy of the international application was communicated from the International Bureau to the USPTO on 08 April 2004. The thirty-month period for paying the basic national fee in the United States expired at midnight on 28 March 2005 (27 March 2005 being a Sunday).

On 15 March 2005, applicants filed a submission for entry into the national stage in the United States which was accompanied by, *inter alia*, the U.S. Basic National Fee and a translation of the application into English.

On 26 August 2005, the United States Designated/Elected Office (DO/EO/US) mailed a NOTIFICATION OF MISSING REQUIREMENTS UNDER 35 U.S.C. 371 (Form PCT/DO/EO/905) indicating, *inter alia*, that an oath or declaration of the inventors in compliance with 37 CFR 1.497(a)-(b) and the surcharge under 37 CFR 1.492(e) for providing the oath or declaration later than thirty months from the priority date were required.

On 07 October 2005, applicants filed the instant petition under 37 CFR 1.47(a) which was accompanied by, *inter alia*, a declaration of inventors, a copy of a letter sent to non-signing inventor Mr. Shimada on April 6, 2005 and an English translation thereof, a copy of a letter sent

to Mr. Shimada on May 23, 2005 and an English translation thereof, and copies of two certified mail receipts and English translations thereof.

## DISCUSSION

Petition Under 37 CFR 1.47(a)

A petition under 37 CFR 1.47(a) must be accompanied by: (1) the fee under 37 CFR 1.17(h); (2) factual proof that the missing joint inventor refuses to execute the application or cannot be reached after diligent effort; (3) a statement of the last known address of the missing inventor; and (4) an oath or declaration by each 37 CFR 1.47(a) applicant on his or her own behalf and on behalf of the non-signing joint inventor.

As to item (1), the petition fee is $200 rather than $130. The balance of $70 has been charged to Deposited Account 15-0461. Accordingly, item (1) has been met.

Item (3) and (4) have been met as well.

Item (2) has not been met. As noted in MPEP § 409.03(d), the statement of facts must be signed, where at all possible, by a person having firsthand knowledge of the facts recited therein. Here, it is not clear that Mr. Daniel Tanner has firsthand knowledge of the facts recited in the statement by him. Statements based on hearsay will not normally be accepted. Also, it is not clear whether it is being alleged that Mr. Tomoharu Shimada refuses to execute the application or that he cannot be reached after diligent effort. A communication was sent to Mr. Shimada's last known address on 06 April 2005 and on 23 May 2005. It is not clear whether Mr. Shimada resided at this address at the time. Accordingly, it is not clear if the inventor is no longer at this address and his whereabouts are unknown, or if he simply received the mailings and did not respond. If the mailings were received and the inventor did not respond, then a refusal to execute the application would likely need to be established. The mailings could be followed up with a telephone call to determine Mr. Shimada's intent. If it is being alleged that the inventor cannot be reached or found, copies of documentary evidence such as *internet searches*, certified mail return receipts, cover letters of instructions, and telegrams, that support a finding that the non-signing inventor could not be found or reached should be made part of the affidavit or declaration.

Translation

Applicants have not yet submitted an accurate translation of the international application as filed. In the translation filed 15 March 2005, a translation of the Figures was not provided. Unless the expression "Fig." is used to identify the drawing(s) in the international application as filed, the expression used to identify the drawing(s) must be translated. See PCT Rule 49.5(f). In the submission filed 15 March 2005, no such translation was provided.

## CONCLUSION

For the above reasons, applicants' petition under 37 CFR 1.47(a) is **DISMISSED** without prejudice.

If reconsideration on the merits of this petition is desired, a proper response, including a translation of the Figures, must be filed within TWO (2) MONTHS from the mail date of this decision. **Failure to timely file the proper response will result in abandonment of this application.** Any reconsideration request should include a cover letter entitled "Renewed Petition Under 37 CFR 1.47(a)". No additional petition fee is required. Extensions of time may be obtained under 37 CFR 1.136(a).

Please direct further correspondence with respect to this matter to Mail Stop PCT, Commissioner for Patents, Office of PCT Legal Administration, P.O. Box 1450, Alexandria, Virginia 22313-1450, with the contents of the letter marked to the attention of the Office of PCT Legal Administration.

Daniel Stemmer
Legal Examiner
PCT Legal Affairs
Office of Patent Cooperation Treaty
Legal Administration
Telephone: (571) 272-3301
Facsimile: (571) 273-0459

13 MAR 2006

UNITED STATES PATENT AND TRADEMARK OFFICE

Commissioner for Patents
United States Patent and Trademark Office
P.O. Box 1450
Alexandria, VA 22313-1450
www.uspto.gov

OLIFF & BERRIDGE, PLC
P.O. BOX 19928
ALEXANDRIA VA 22320

| | | |
|---|---|---|
| In re Application of | : | |
| NAKAMURA et al. | : | |
| Application No.: 10/528,069 | : | SUPPLEMENTAL |
| PCT No.: PCT/JP03/12353 | : | |
| Int. Filing Date: 26 September 2003 | : | DECISION |
| Priority Date: 27 September 2002 | : | |
| Attorney Docket No.: 122733 | : | |
| For: THERMAL TREATMENT APPARATUS, | : | |
| METHOD FOR MANUFACTURING | : | |
| SEMICONDUCTOR DEVICE, AND METHOD | : | |
| FOR MANUFACTURING SUBSTRATE | : | |

This decision is supplemental to the decision mailed 03 March 2006. That decision failed to take into account the declaration of facts by Mr. Akihiro Fukushima. Accordingly, the decision mailed 03 March 2006 is hereby VACATED.

## BACKGROUND

On 26 September 2003, applicants filed international application PCT/JP03/12353, which designated the United States and claimed a priority date of 27 September 2002. A copy of the international application was communicated from the International Bureau to the USPTO on 08 April 2004. The thirty-month period for paying the basic national fee in the United States expired at midnight on 28 March 2005 (27 March 2005 being a Sunday).

On 15 March 2005, applicants filed a submission for entry into the national stage in the United States which was accompanied by, *inter alia*, the U.S. Basic National Fee and a translation of the application into English.

On 26 August 2005, the United States Designated/Elected Office (DO/EO/US) mailed a NOTIFICATION OF MISSING REQUIREMENTS UNDER 35 U.S.C. 371 (Form PCT/DO/EO/905) indicating, *inter alia*, that an oath or declaration of the inventors in compliance with 37 CFR 1.497(a)-(b) and the surcharge under 37 CFR 1.492(e) for providing the oath or declaration later than thirty months from the priority date were required.

On 07 October 2005, applicants filed the instant petition under 37 CFR 1.47(a) which was accompanied by, *inter alia*, a declaration of inventors, a declaration of facts by Mr. Akihiro

Fukushima, a copy of a letter sent to non-signing inventor Mr. Shimada on April 6, 2005 and an English translation thereof, a copy of a letter sent to Mr. Shimada on May 23, 2005 and an English translation thereof, and copies of two certified mail receipts and English translations thereof.

On 03 March 2006, a decision was mailed dismissing applicants' petition under 37 CFR 1.47(a). However, that decision failed to take into account the declaration of facts by Mr. Akihiro Fukushima.

## DISCUSSION

Petition Under 37 CFR 1.47(a)

A petition under 37 CFR 1.47(a) must be accompanied by: (1) the fee under 37 CFR 1.17(h); (2) factual proof that the missing joint inventor refuses to execute the application or cannot be reached after diligent effort; (3) a statement of the last known address of the missing inventor; and (4) an oath or declaration by each 37 CFR 1.47(a) applicant on his or her own behalf and on behalf of the non-signing joint inventor.

As to item (1), the petition fee is $200 rather than $130. The balance of $70 has been charged to Deposited Account 15-0461. Accordingly, item (1) has been met.

Item (3) and (4) have been met as well.

Item (2) has not been met. It is not clear whether it is being alleged that Mr. Tomoharu Shimada refuses to execute the application or that he cannot be reached after diligent effort. The two are distinct. *See, e.g.,* MPEP 409.03(d), item I. "Inventor Cannot Be Reached" and item II. "Refusal to Join." A first communication was sent to Mr. Shimada at a first address on 06 April 2005. A second communication was sent to Mr. Shimada at a second address on 23 May 2005. It is not clear why the communications were sent to two different addresses less than seven weeks apart. It is not clear whether Mr. Shimada resided at either of these addresses at the time the communications were sent. Accordingly, it is not clear if the inventor is no longer at either of these addresses and his whereabouts are unknown, or if he simply received one or both of the mailings and did not respond. If one or both of the mailings were received and the inventor did not respond, then a refusal to execute the application would likely need to be established. See MPEP § 409.03(d), item II. The inventor must be presented with a complete copy of the application papers (specification, including claims, drawing, and oath or declaration) for a refusal to be established. A complete copy of the application papers was sent to the first address but not to the second address in the instant situation. Thus, if Mr. Shimada resides at the second address, a complete copy of the application papers would still need to be presented to him. If it is being alleged that the inventor cannot be reached or found, copies of documentary evidence such as *internet searches*, certified mail return receipts, cover letters of instructions, and telegrams, that support a finding that the non-signing inventor could not be found or reached should be made part of the affidavit or declaration. See MPEP § 409.03, item I.

Translation

Applicants have not yet submitted an accurate translation of the international application as filed. In the translation filed 15 March 2005, a translation of the Figures was not provided. Unless the expression "Fig." is used to identify the drawing(s) in the international application as filed, the expression used to identify the drawing(s) must be translated. See PCT Rule 49.5(f). In the submission filed 15 March 2005, no such translation was provided.

## CONCLUSION

For the above reasons, applicants' petition under 37 CFR 1.47(a) is **DISMISSED** without prejudice.

For the above reasons, the decision mailed 03 March 2006 is hereby **VACATED**.

If reconsideration on the merits of this petition is desired, a proper response, including a translation of the Figures, must be filed within TWO (2) MONTHS from the mail date of this decision. **Failure to timely file the proper response will result in abandonment of this application.** Any reconsideration request should include a cover letter entitled "Renewed Petition Under 37 CFR 1.47(a)". No additional petition fee is required. Extensions of time may be obtained under 37 CFR 1.136(a).

Please direct further correspondence with respect to this matter to Mail Stop PCT, Commissioner for Patents, Office of PCT Legal Administration, P.O. Box 1450, Alexandria, Virginia 22313-1450, with the contents of the letter marked to the attention of the Office of PCT Legal Administration.

Daniel Stemmer
Legal Examiner
PCT Legal Affairs
Office of Patent Cooperation Treaty
Legal Administration
Telephone: (571) 272-3301
Facsimile: (571) 273-0459

#8

UNITED STATES PATENT AND TRADEMARK OFFICE

Commissioner for Patents
United States Patent and Trademark Office
P.O. Box 1450
Alexandria, VA 22313-1450
www.uspto.gov

13 SEP 2006

OLIFF & BERRIDGE, PLC
P.O. BOX 19928
ALEXANDRIA VA 22320

| | | |
|---|---|---|
| In re Application of | : | |
| NAKAMURA et al. | : | |
| Application No.: 10/528,069 | : | |
| PCT No.: PCT/JP03/12353 | : | |
| Int. Filing Date: 26 September 2003 | : | DECISION |
| Priority Date: 27 September 2002 | : | |
| Attorney Docket No.: 122733 | : | |
| For: THERMAL TREATMENT APPARATUS, | : | |
| METHOD FOR MANUFACTURING | : | |
| SEMICONDUCTOR DEVICE, AND METHOD | : | |
| FOR MANUFACTURING SUBSTRATE | : | |

This decision is in response to the submission filed 10 July 2006 in the United States Patent and Trademark Office (USPTO).

## BACKGROUND

On 26 September 2003, applicants filed international application PCT/JP03/12353, which designated the United States and claimed a priority date of 27 September 2002. A copy of the international application was communicated from the International Bureau to the USPTO on 08 April 2004. The thirty-month period for paying the basic national fee in the United States expired at midnight on 28 March 2005 (27 March 2005 being a Sunday).

On 15 March 2005, applicants filed a submission for entry into the national stage in the United States which was accompanied by, *inter alia*, the U.S. Basic National Fee and a translation of the application into English.

On 26 August 2005, the United States Designated/Elected Office (DO/EO/US) mailed a NOTIFICATION OF MISSING REQUIREMENTS UNDER 35 U.S.C. 371 (Form PCT/DO/EO/905) indicating, *inter alia*, that an oath or declaration of the inventors in compliance with 37 CFR 1.497(a)-(b) and the surcharge under 37 CFR 1.492(e) for providing the oath or declaration later than thirty months from the priority date were required.

On 07 October 2005, applicants filed a petition under 37 CFR 1.47(a) which was accompanied by, *inter alia*, a declaration of inventors, a declaration of facts by Mr. Akihiro Fukushima, a copy of a letter sent to non-signing inventor Mr. Shimada on April 6, 2005 and an

English translation thereof, a copy of a letter sent to Mr. Shimada on May 23, 2005 and an English translation thereof, and copies of two certified mail receipts and English translations thereof.

On 03 March 2006, a decision was mailed dismissing applicants' petition under 37 CFR 1.47(a). However, that decision failed to take into account the declaration of facts by Mr. Akihiro Fukushima.

On 13 March 2006, a supplemental decision was mailed vacating the decision mailed 03 March 2006 and taking into account the declaration of facts by Mr. Akihiro Fukushima. The decision dismissed applicants' petition under 37 CFR 1.47(a) without prejudice because applicant had failed to provide factual proof that the missing joint inventor refuses to execute the application or cannot be reached after diligent effort. The decision also indicated that a translation of the Figures was required.

On 10 July 2006, applicants filed the instant submission which was accompanied by, *inter alia*, a declaration of inventors and a translation of the Figures.

## DISCUSSION

Since a 37 CFR 1.497 declaration has been executed by all the joint inventors, the petition for status under 37 CFR 1.47(a) is moot. The application need not be returned to the Office of PCT Legal Affairs for any further consideration of the status under 37 CFR 1.47 and no such status should be indicated on this application file.

The declaration of inventors filed 10 July 2006 is not in compliance with 37 CFR 1.69(b), specifically applicants have not used one of the pre-approved foreign language forms nor have applicants furnished the requisite statement attesting to the accuracy of the translation.

## CONCLUSION

For the above reasons, applicants' petition under 37 CFR 1.47(a) is **DISMISSED** as **MOOT**.

Since the reply filed 10 July 2006 appears to have been bona fide, applicant is given a TIME PERIOD of ONE (1) MONTH or THIRTY (30) DAYS from the mailing date of this notice, whichever is longer, within which to provide (1) a pre-approved foreign language declaration in compliance with 37 CFR 1.497(a)-(b) or (2) the requisite statement under 37 CFR 1.69(b) that the translation is accurate. Failure to timely file a proper reply will result in abandonment of the application.

Please direct further correspondence with respect to this matter to Mail Stop PCT, Commissioner for Patents, Office of PCT Legal Administration, P.O. Box 1450, Alexandria,

Virginia 22313-1450, with the contents of the letter marked to the attention of the Office of PCT Legal Administration.

Daniel Stemmer
Legal Examiner
PCT Legal Affairs
Office of Patent Cooperation Treaty
Legal Administration
Telephone: (571) 272-3301
Facsimile: (571) 273-0459

1 0 MAY 2007

UNITED STATES PATENT AND TRADEMARK OFFICE

Commissioner for Patents
United States Patent and Trademark Office
P.O. Box 1450
Alexandria, VA 22313-1450
www.uspto.gov

OLIFF & BERRIDGE, PLC
P.O. BOX 19928
ALEXANDRIA VA 22320

| | | |
|---|---|---|
| In re Application of | : | |
| NAKAMURA et al. | : | |
| Application No.: 10/528,069 | : | |
| PCT No.: PCT/JP03/12353 | : | |
| Int. Filing Date: 26 September 2003 | : | DECISION |
| Priority Date: 27 September 2002 | : | |
| Attorney Docket No.: 122733 | : | |
| For: THERMAL TREATMENT APPARATUS, | : | |
| METHOD FOR MANUFACTURING | : | |
| SEMICONDUCTOR DEVICE, AND METHOD | : | |
| FOR MANUFACTURING SUBSTRATE | : | |

This decision is in response to the submission filed 16 April 2007 in the United States Patent and Trademark Office (USPTO).

## BACKGROUND

On 26 September 2003, applicants filed international application PCT/JP03/12353, which designated the United States and claimed a priority date of 27 September 2002. A copy of the international application was communicated from the International Bureau to the USPTO on 08 April 2004. The thirty-month period for paying the basic national fee in the United States expired at midnight on 28 March 2005 (27 March 2005 being a Sunday).

On 15 March 2005, applicants filed a submission for entry into the national stage in the United States which was accompanied by, *inter alia*, the U.S. Basic National Fee and a translation of the application into English.

On 26 August 2005, the United States Designated/Elected Office (DO/EO/US) mailed a NOTIFICATION OF MISSING REQUIREMENTS UNDER 35 U.S.C. 371 (Form PCT/DO/EO/905) indicating, *inter alia*, that an oath or declaration of the inventors in compliance with 37 CFR 1.497(a)-(b) and the surcharge under 37 CFR 1.492(e) for providing the oath or declaration later than thirty months from the priority date were required.

On 07 October 2005, applicants filed a petition under 37 CFR 1.47(a) which was accompanied by, *inter alia*, a declaration of inventors, a declaration of facts by Mr. Akihiro Fukushima, a copy of a letter sent to non-signing inventor Mr. Shimada on April 6, 2005 and an English translation thereof, a copy of a letter sent to Mr. Shimada on May 23, 2005 and an

English translation thereof, a copy of a letter sent to Mr. Shimada on May 23, 2005 and an English translation thereof, and copies of two certified mail receipts and English translations thereof.

On 03 March 2006, a decision was mailed dismissing applicants' petition under 37 CFR 1.47(a). However, that decision failed to take into account the declaration of facts by Mr. Akihiro Fukushima.

On 13 March 2006, a supplemental decision was mailed vacating the decision mailed 03 March 2006 and taking into account the declaration of facts by Mr. Akihiro Fukushima. The decision dismissed applicants' petition under 37 CFR 1.47(a) without prejudice because applicant had failed to provide factual proof that the missing joint inventor refuses to execute the application or cannot be reached after diligent effort. The decision also indicated that a translation of the Figures was required.

On 10 July 2006, applicants filed a submission which was accompanied by, *inter alia*, a declaration of inventors and a translation of the Figures.

On 13 September 2006, a decision was mailed dismissing applicants' petition under 37 CFR 1.47(a) as moot since a 37 CFR 1.497 declaration had been executed by all the joint inventors. The decision also noted that the declaration of inventors filed 10 July 2006 was not in compliance with 37 CFR 1.69(b) and that a pre-approved foreign language declaration in compliance with 37 CFR 1.497(a)-(b) or the requisite statement under 37 CFR 1.69(b) that the translation is accurate was required.

On 16 April 2007, applicants filed the instant submission which includes, a copy of a USPTO receipt date-stamped 27 September 2006 and a copy of a "RESPONSE TO DECISION ON PETITION". The submission has properly been treated as a petition under 37 CFR 1.181.

## DISCUSSION

Petition Under 37 CFR 1.181

Applicant has provided sufficient evidence to establish that on 27 September 2006 applicant filed a "RESPONSE TO DECISION ON PETITION". The proof is in the form of the copy of the receipt for the above-identified application which bears a United States Patent and Trademark Office date stamp of 27 September 2006 and which itemizes, *inter alia*, a "RESPONSE TO DECISION ON PETITION". This postcard receipt also identifies the above-captioned application number and attorney docket number. Further, practitioner states that the copy of the "RESPONSE TO DECISION ON PETITION" filed 16 April 2007 is a true copy of the "RESPONSE TO DECISION ON PETITION" originally filed 27 September 2006. Therefore, in view of the date-stamped receipt and practitioner's statement, it is proper to accept the copy of the "RESPONSE TO DECISION ON PETITION" as having been originally filed in the USPTO on 27 September 2006.

Response to Decision (Filed 27 September 2006)

It is urged that 37 CFR 1.69(b) does not apply to the declaration of inventors filed 10 July 2006. 37 CFR 1.69(b) states

> Unless the text of any oath or declaration in a language other than English is in a form provided by the Patent and Trademark Office or in accordance with PCT Rule 4.17(iv), it must be accompanied by an English translation together with a statement that the translation is accurate, except that in the case of an oath or declaration filed under § 1.63, the translation may be filed in the Office no later than two months from the date applicant is notified to file the translation.

Applicants urge that the phrase "in a language other than English" applies exclusively to declarations that are "wholly in a foreign language". However, there is simply nothing in the Rule which limits the language of the declaration to be *only* in a language other than English. Indeed, the rule refers to "a form provided by the Patent and Trademark Office". The forms provided by the USPTO, e.g., PTO/SB/106 "Japanese Language Declaration", include both a language other than English, e.g., Japanese, and English. (Attention is also directed to 1287 OG 67, 12 October 2004, "Section 1.69: Section 1.69(b) is amended by deleting the words "or approved" as unnecessary, and possibly leading to confusion and the mistaken assumption that the Office has a procedure for the approval of applicant-generated forms, where no such procedure exists. See Changes to Implement the Patent Business Goals, 64 FR 53771, 53777 (Oct. 4, 1999), 1228 Off. Gaz. Pat. Office 15, 20 (Nov. 2, 1999) (proposed rule) (declining to adopt a review service for applicant-created forms).")

The statement included with the submission filed 27 September 2006 that the translation of the declaration is accurate satisfies 37 CFR 1.69(b).

## CONCLUSION

The petition under 37 CFR 1.181 is **GRANTED** for the reasons set forth above.

This application is being forwarded to the National Stage Processing Branch of the Office of PCT Operations to continue national stage processing of the application, including the accordation of a 35 U.S.C. §§371(c)(1), (c)(2), and (c)(4) date of **10 July 2006**.

Daniel Stemmer
Legal Examiner
PCT Legal Affairs
Office of Patent Cooperation Treaty
Legal Administration
Telephone: (571) 272-3301

Enc.: Form PTO/SB/106 "Japanese Language Declaration"

PTO/SB/106 (5-00)
Approved for use through 10/31/02. OMB 0651-0032
Patent and Trademark Office; U.S. DEPARTMENT OF COMMERCE
Under the Paperwork Reduction Act of 1995, no persons are required to respond to a collection of information unless it displays a valid OMB control number.

# Declaration and Power of Attorney for Patent Application

## 特許出願宣言書及び委任状

## Japanese Language Declaration

## 日本語宣言書

私は、以下に記名された発明者として、ここに下記の通り宣言する：

As a below named inventor, I hereby declare that:

私の住所、郵便の宛先そして国籍は、私の氏名の後に記載された通りである。

My residence, post office address and citizenship are as stated next to my name.

下記の名称の発明について、特許請求範囲に記載され、且つ特許が求められている発明主題に関して、私は、最初、最先且つ唯一の発明者である（唯一の氏名が記載されている場合）か、或いは最初、最先且つ共同発明者である（複数の氏名が記載されている場合）と信じている。

I believe I am the original, first and sole inventor (if only one name is listed below) or an original, first and joint inventor (if plural names are listed below) of the subject matter which is claimed and for which a patent is sought on the invention entitled

_____

_____

上記発明の明細書はここに添付されているが、下記の欄がチェックされている場合は、この限りでない：

the specification of which is attached hereto unless the following box is checked:

☐ _____ の日に出願され、
この出願の米国出願番号またはＰＣＴ国際出願番号は、
_____ であり、且つ
_____ の日に補正された出願（該当する場合）

☐ was filed on _____
as United States Application Number or
PCT International Application Number
_____ and was amended on
_____ (if applicable).

私は、上記の補正書によって補正された、特許請求範囲を含む上記明細書を検討し、且つ内容を理解していることをここに表明する。

I hereby state that I have reviewed and understand the contents of the above identified specification, including the claims, as amended by any amendment referred to above.

私は、連邦規則法典第３７編規則１．５６に定義されている、特許性について重要な情報を開示する義務があることを認める。

I acknowledge the duty to disclose information which is material to patentability as defined in Title 37, Code of Federal Regulations, Section 1.56.

Burden Hour Statement: This form is estimated to take 0.4 hours to complete. Time will vary depending upon the need of the individual case. Any comments on the amount of time you are required to complete this form should be sent to Chief Information Officer, U.S. Patent and Trademark Office, Washington, DC 20231. DO NOT SEND FEES OR COMPLETED FORMS TO THIS ADDRESS. SEND TO: Commissioner of Patents and Trademarks, Washington, DC 20231.

Under the Paperwork Reduction Act of 1995, no persons are required to respond to a collection of information unless it displays a valid OMB control number.

# Japanese Language Declaration
# （日本語宣言書）

私は、ここに、以下に記載した外国での特許出願または発明者証の出願、或いは米国以外の少なくとも一国を指定している米国法典第３５編第３６５条(a)によるＰＣＴ国際出願について、同第１１９条(a)-(d)項又は第３６５条(b)項に基づいて優先権を主張するとともに、優先権を主張する本出願の出願日よりも前の出願日を有する外国での特許出願または発明者証の出願、或いはＰＣＴ国際出願については、いかなる出願も、下記の枠内をチェックすることにより示した。

I hereby claim foreign priority under Title 35, United States Code, Section 119(a)-(d) or 365(b) of any foreign application(s) for patent or inventor's certificate, or 365(a) of any PCT International application which designated at least one country other than the United States listed below and have also identified below, by checking the box, any foreign application for patent or inventor's certificate, or PCT International application having a filing date before that of the application for which priority is claimed.

Prior Foreign Application(s)
外国での先行出願

Priority Not Claimed
優先権主張なし

| (Number) (番号) | (Country) (国名) | (Day/Month/Year Filed) (出願日／月／年) | ☐ |
|---|---|---|---|
| (Number) (番号) | (Country) (国名) | (Day/Month/Year Filed) (出願日／月／年) | ☐ |

私は、ここに、下記のいかなる米国仮特許出願についても、その米国法典第３５編１１９条(e)項の利益を主張する。

I hereby claim the benefit under Title 35, United States Code, Section 119(e) of any United States provisional application(s) listed below.

| (Application No.) (出願番号) | (Filing Date) (出願日) | (Application No.) (出願番号) | (Filing Date) (出願日) |
|---|---|---|---|

私は、ここに、下記のいかなる米国出願についても、その米国法典第３５編第１２０条に基づく利益を主張し、又米国を指定するいかなるＰＣＴ国際出願についても、その同第３６５条(c)に基づく利益を主張する。また、本出願の各特許請求の範囲の主題が、米国法典第３５編第１１２条第１段に規定された態様で、先行する米国出願又はＰＣＴ国際出願に開示されていない場合においては、その先行出願の出願日と本国内出願日またはＰＣＴ国際出願日との間の期間中に入手された情報で、連邦規則法典第３７編規則１．５６に定義された特許性に関わる重要な情報について開示義務があることを承認する。

I hereby claim the benefit under Title 35, United States Code, Section 120 of any United States application(s), or 365(c) of any PCT International application designating the United States, listed below and, insofar as the subject matter of each of the claims of this application is not disclosed in the prior United States or PCT International application in the manner provided by the first paragraph of Title 35, United States Code Section 112, I acknowledge the duty to disclose information which is material to patentability as defined in Title 37, Code of Federal Regulations, Section 1.56 which became available between the filing date of the prior application and the national or PCT International filing date of application.

| (Application No.) (出願番号) | (Filing Date) (出願日) | (Status: Patented, Pending, Abandoned) (現況：特許許可、係属中、放棄) |
|---|---|---|
| (Application No.) (出願番号) | (Filing Date) (出願日) | (Status: Patented, Pending, Abandoned) (現況：特許許可、係属中、放棄) |

私は、ここに表明された私自身の知識に係わる陳述が真実であり、且つ情報と信ずることに基づく陳述が、真実であると信じられることを宣言し、さらに、故意に虚偽の陳述などを行った場合は、米国法典第１８編第１００１条に基づき、罰金または拘禁、若しくはその両方により処罰され、またそのような故意による虚偽の陳述は、本出願またはそれに対して発行されるいかなる特許も、その有効性に問題が生ずることを理解した上で陳述が行われたことを、ここに宣言する。

I hereby declare that all statements made herein of my own knowledge are true and that all statements made on information and belief are believed to be true; and further that these statements were made with the knowledge that willful false statements and the like so made are punishable by fine or imprisonment, or both, under Section 1001 of Title 18 of the United States Code and that such willful false statements may jeopardize the validity of the application or any patent issued thereon.

PTO/SB/106 (5-00)
Approved for use through 10/31/02. OMB 0651-0032
Patent and Trademark Office; U.S. DEPARTMENT OF COMMERCE
Under the Paperwork Reduction Act of 1995, no persons are required to respond to a collection of information unless it displays a valid OMB control number.

# Japanese Language Declaration
# （日本語宣言書）

委任状： 私は本出願を審査する手続を行い、且つ米国特許商標庁との全ての業務を遂行するために、記名された発明者として、下記の弁護士及び／または弁理士を任命する。（氏名及び登録番号を記載すること）

POWER OF ATTORNEY: As a named inventor, I hereby appoint the following attorney(s) and/or agent(s) to prosecute this application and transact all business in the Patent and Trademark Office connected therewith (list name and registration number).

書類送付先

Send Correspondence to:

直通電話連絡先：（氏名及び電話番号）

Direct Telephone Calls to: (name and telephone number)

| | | | |
|---|---|---|---|
| 唯一または第一発明者氏名 | | Full name of sole or first inventor | |
| 発明者の署名 | 日付 | Inventor's signature | Date |
| 住所 | | Residence | |
| 国籍 | | Citizenship | |
| 郵便の宛先 | | Post Office Address | |
| | | | |
| 第二共同発明者がいる場合、その氏名 | | Full name of second joint inventor, if any | |
| 第二共同発明者の署名 | 日付 | Second inventor's signature | Date |
| 住所 | | Residence | |
| 国籍 | | Citizenship | |
| 郵便の宛先 | | Post Office Address | |
| | | | |

（第三以下の共同発明者についても同様に記載し、署名をすること）

(Supply similar information and signature for third and subsequent joint inventors.)

UNITED STATES PATENT AND TRADEMARK OFFICE

Commissioner for Patents
United States Patent and Trademark Office
P.O. Box 1450
Alexandria, VA 22313-1450
www.uspto.gov

**BIRCH STEWART KOLASCH & BIRCH**
**PO BOX 747**
**FALLS CHURCH VA 22040-0747**

MAILED

JUN 18 2010

OFFICE OF PETITIONS

| | | |
|---|---|---|
| In re Application of | : | |
| Andres Valkna et al. | : | DECISION ON PETITION |
| Application No. 10/528,073 | : | TO WITHDRAW |
| Filed: March 17, 2005 | : | FROM RECORD |
| Attorney Docket No. **0552-0160PUS1** | : | |

This is a decision on the request to withdraw as attorney of record under 37 CFR § 1.36(b), filed May 20, 2010.

The request is **NOT APPROVED**.

The request cannot be approved because the Office no longer accept address changes to a new practitioner/customer number or law firm filed with a request, absent the filing of a power of attorney to the new representative.

The Office will only accept correspondence address changes to the most current address information provided for the assignee of the entire interest *who properly became of record under 37 CFR 3.71,* or, if no assignee of the entire interest has properly been made of record, the most current address information provided for the first named inventor. 37 CFR 3.71(c) states:

> *An assignee becomes of record either in a national patent application or a reexamination proceeding by filing a statement in compliance with § 3.73(b) that is signed by a party who is authorized to act on behalf of the assignee.*

The assignee must establish its ownership of the patent to the satisfaction of the Director. In this regard, the statement under 37 CFR 3.73(b) must have either: (i) documentary evidence of a chain of title from the original owner to the assignee (*e.g.*, copy of an executed assignment), and a statement affirming that the documentary evidence of the chain of title from the original owner to the assignee was or concurrently is being submitted for recordation pursuant to § 3.11; or (ii) a statement specifying where documentary evidence of a chain of title from the original owner to the assignee is recorded in the assignment records of the Office (*e.g.*, reel and frame number).

Also I would like to bring to petitioner's attention that the application is now abandoned for failure to respond to the Office action mailed November 27, 2009. The Office does not process any request to withdraw as attorney filed after the application has gone abandoned.

All future communications from the Office will continue to be directed to the above-listed address until otherwise notified by applicant.

Telephone inquires concerning this decision should be directed to the undersigned at (571) 272-4584.

/JoAnne Burke/
JoAnne Burke
Petitions Examiner
Office of Petitions

15 JUL 2005

UNITED STATES PATENT AND TRADEMARK OFFICE

COMMISSIONER FOR PATENTS
UNITED STATES PATENT AND TRADEMARK OFFICE
P.O. BOX 1450
ALEXANDRIA, VA 22313-1450
www.uspto.gov

Joseph R. Evanns
EVANNS & WALSH
119 N. San Vincente Blvd
Suite 206
Beverly Hills, CA 90211

| | | |
|---|---|---|
| In re Application of: | : | |
| FRIEDHEIM, Max | : | |
| U.S. Application No.: 10/528,084 | : | DECISION ON PETITION |
| PCT No.: PCT/US05/08705 | : | |
| International Filing Date: 15 March 2005 | : | |
| Priority Date: 15 March 2004 | : | |
| Attorney's Docket No.:1776-013 | : | |
| For: IMPROVED HIGHLY SUPERHEATED VAPOR GENERATOR SYSTEM AND METHOD | : | |

This decision is issued in response to the "Petition To The Director For Vacating And Withdrawing Erroneous Purported Notification Of Abandonment; Exhibits; Declaration Of Applicant's Attorney In Support Of Petition [37 CFR 1.181]" filed 12 July 2005. No petition fee is required.

## BACKGROUND

On 15 March 2005, applicant filed international application PCT/US05/08705 which claimed a priority date of 24 March 2005 and which designated the United States. The deadline for payment of the basic national fee with respect to the national stage in the United States is thirty months from the priority date, i.e., 15 September 2006.

On 15 March 2005, applicant also filed a "Transmittal Letter To The United States Designated/Elected Office (DO/EO/US) Concerning A Submission Under 35 U.S.C. 371" (Form PTO-1390) accompanied by a Power Of Attorney form. Based on applicant's use of the Form PTO-1390 (i.e., the transmittal letter applicable to national stage submissions under 35 U.S.C. 371), the USPTO initiated the present application file as a national stage of PCT/US05/08705.

On 11 April 2005, in the international application, the United States Receiving Office (RO/US) mailed an "Invitation To Correct Defects In The International Application" (Form PCT/RO/106) identifying defects in the international application.

On 11 May 2005, applicant filed what appears to be a response to the "Invitation To Correct Defects In The International Application." However, applicant submitted this response using a Form PTO-1390 national stage transmittal letter. Based on the use of the Form PTO-

1390, the 11 May 2005 submission was placed in the present national stage file, rather than the international application file.

On 13 June 2005, the United States Designated/Elected Office (DO/EO/US) mailed a "Notification of Abandonment" (Form PCT/DO/EO/903) in the present national stage application indicating that the application was abandoned for failure to pay the basic national fee within thirty months of the priority date.

On 12 July 2005, applicant filed the petition considered herein. The petition seeks withdrawal of the Notification Of Abandonment. It is noted that the Form PTO-1390 Transmittal Letter submitted with the present petition identified the application number for the petition as 60/553,576 (i.e., the provisional application that serves as the priority claim in the international application). However, because the petition requests withdrawal of the attached Notification Of Abandonment (which was issued in the present national stage application), the petition is treated herein.

## DISCUSSION

The deadline for payment of the basic national fee in the present national stage application is 15 September 2006, i.e., thirty months after the 15 March 2004 priority date claimed in international application PCT/US05/08705. More than one year remains before expiration of this deadline.

The Notification Of Abandonment (Form PCT/DO/EO/903) mailed herein on 23 June 2005, based as it was on applicant's purported failure to pay the basic national fee prior to this as-yet unexpired deadline, is therefore appropriately vacated.

## CONCLUSION

Applicant's petition is **GRANTED** to the extent that the Notification Of Abandonment (Form PCT/DO/EO/903) mailed on 23 June 2005 in national stage application number 10/528,084 is hereby **VACATED**.

A copy of the materials filed by applicant on 11 May 2005 in response to the "Invitation To Correct Defects In The International Application" (Form PCT/RO/106) issued in international application PCT/US05/08705 has been placed in the international application file.

Applicant is reminded that the Form PTO-1390 Transmittal Letter is for use in national stage submissions only. The Form PTO-1390 should not be used for filings intended for the international application.

The present national stage application is being returned to the National Stage Processing Branch of the Office Of PCT Operations for further processing in accordance with this decision.

Richard M. Ross
PCT Petitions Attorney
Office Of PCT Legal Administration
Telephone: (571) 272-3296
Facsimile: (571) 273-0459

UNITED STATES PATENT AND TRADEMARK OFFICE

Commissioner for Patents
United States Patent and Trademark Office
P.O. Box 1450
Alexandria, VA 22313-1450
www.uspto.gov

0 6 DEC 2006

Joseph R. Evanns
EVANNS & WALSH
119 N. San Vincente Blvd
Suite 206
Beverly Hills, CA 90211

| | |
|---|---|
| In re Application of: | |
| FRIEDHEIM, Max | |
| U.S. Application No.: 10/528,084 | DECISION ON PETITION |
| PCT No.: PCT/US05/08705 | |
| International Filing Date: 15 March 2005 | |
| Priority Date: 15 March 2004 | |
| Attorney's Docket No.:1776-013 | |
| For: IMPROVED HIGHLY SUPERHEATED VAPOR GENERATOR SYSTEM AND METHOD | |

This decision is issued in response to the "Petition To The Director For Vacating And Withdrawing Erroneous Purported Notification Of Abandonment; Exhibits; Declaration Of Applicant's Attorney In Support Of Petition [37 CFR 1.181]" filed 24 November 2006. No petition fee is required.

## BACKGROUND

The procedural background for the present application was set forth in the decision mailed herein on 15 July 2005. That decision granted applicant's petition for withdrawal of an earlier holding of abandonment. The decision noted that payment of the basic national fee herein was not required until 15 September 2006.

On 27 September 2006, the United States Designated/Elected Office (DO/EO/US) mailed a second "Notification of Abandonment" (Form PCT/DO/EO/909) in the present national stage application, indicating that the application was abandoned for failure to pay the basic national fee within thirty months of the priority date.

On 24 November 2006, applicant filed the petition considered herein. The petition seeks withdrawal of the holding of abandonment, stating that the required basic national fee was timely filed on 12 September 2006.

## DISCUSSION

The deadline for payment of the basic national fee in the present national stage application was 15 September 2006, i.e., thirty months after the 15 March 2004 priority date claimed in international application PCT/US2005/008705.

In the present petition, applicant asserts that a transmittal letter, accompanied by a preliminary amendment and a check in payment of the basic national fee, were filed herein on 12 September 2006. Attached to the petition is a copy of these materials, as well as a copy of a return postcard that itemizes these materials and bears a USPTO receipt stamp dated 12 September 2006. A review of the application file confirms receipt of these materials on 12 September 2006.

Based on applicant's statements in the present petition, the itemized postcard bearing the 12 September 2006 receipt stamp, and a review of the application file, it is concluded that applicant's payment of the basic national fee was filed in the USPTO on 12 September 2006, prior to the expiration of thirty months from the priority date.

The Notification Of Abandonment mailed 27 September 2006, based as it was on applicant's purported failure to file the basic national fee before the expiration of the thirty month deadline, is appropriately withdrawn.

## CONCLUSION

The petition to withdraw the holding of abandonment is **GRANTED**.

The Notification Of Abandonment (Form PCT/DO/EO/909) mailed 27 September 2006 is hereby **VACATED**.

This application is being referred to the National Stage Processing Branch of the International Division for further processing in accordance with this decision. The date under 35 U.S.C. 371(c)(1), (c)(2), and (c)(4) is 12 September 2006.

Richard M. Ross
Attorney Advisor
Office of PCT Legal Administration
Telephone: (571) 272-3296
Facsimile: (571) 273-0459

UNITED STATES PATENT AND TRADEMARK OFFICE

Commissioner for Patents
United States Patent and Trademark Office
P.O. Box 1450
Alexandria, VA 22313-1450
www.uspto.gov

Mark Farber
US SURGICAL
Division of Tyco Healthcare Group
150 Glover Avenue
Norwalk, CT 06856

COPY MAILED
AUG 22 2006
OFFICE OF PETITIONS

| | | |
|---|---|---|
| In re Application of | : | |
| GARRISON et al. | : | |
| Application No. 10/528,089 | : | DECISION ON PETITION |
| Filed: March 16, 2005 | : | TO WITHDRAW |
| Attorney Docket No. 2860 | : | FROM RECORD |
| | : | |

This is a decision on the Request to Withdraw as attorney or agent of record under 37 C.F.R. § 1.36(b), filed March 10, 2006.

The request is **NOT APPROVED**.

A grantable request to withdraw as attorney/agent of record must be signed by every attorney/agent seeking to withdraw or contain a clear indication that one attorney is signing on behalf of another/others. A request to withdraw will not be approved unless at least 30 (thirty) days would remain between the date of approval and the later of the expiration date of a time to file a response or the expiration date of the maximum time period which can be extended under 37 C.F.R. § 1.136(a).

The Office cannot approve the request at this time since the reasons provided do not meet any of the conditions under the mandatory or permissive categories enumerated in 37 CFR 10.40. Section 10.40 of Title 37 of the Code of Federal Regulation states, "[a] practitioner shall not withdraw from employment in a proceeding before the Office without permission from the Office[.]" More specifically, 37 CFR 10.40 states, "[i]f paragraph (b) of this section is not applicable, a practitioner may not request permission to withdraw in matter pending before the Office unless such request or such withdrawal is" for one the permissive reasons listed in 37 CFR 10.40(c). The reasons set forth in the request, application has been acquired by Integra LifeSciences Corporation, does not meet any of the conditions set forth in 37 CFR 10.40.

All future communications from the Office will continue to be directed to the above-listed address until otherwise notified by applicant.

Telephone inquiries concerning this decision should be directed to Monica A. Graves at 571-272-7253.

David Bucci
Petitions Examiner
Office of Petitions

cc: Thomas Runk, Esq.
FULWIDER PATTON
Howard Hughes Center
6060 Center Drive, Tenth Floor
Los Angeles, CA 90045

#3

UNITED STATES PATENT AND TRADEMARK OFFICE

Commissioner for Patents
United States Patent and Trademark Office
P.O. Box 1450
Alexandria, VA 22313-1450
www.uspto.gov

20 DEC 2005

23364
BACON & THOMAS
625 Slaters Lane, Fourth Floor
Alexandria, VA 22314

In re Application of
EICHHOLZ, Berndt *et al*
U.S. Application No.: 10/528,095
PCT No.: PCT/EP03/010006
Int. Filing Date: 09 September 2003
Priority Date: 12 September 2002
Attorney Docket No.: EICH3001/FJD
For: ORIENTING MECHANISM FOR A MEASURING DEVICE

**DECISION ON PETITION FOR REVIVAL UNDER 37 CFR 1.137(b)**

Applicants' "Petition to Revive Abandoned Application Under 37 CFR 1.137(b)" filed with the national stage papers on 16 March 2005 is hereby **GRANTED** as follows:

The basic national fee and petition fee have been paid. Applicants statement is sufficient to meet the requirements of 37 CFR 1.137(b)(3). A terminal disclaimer is not required. Accordingly, all requirements under 37 CFR 1.137(b) have been satisfied.

An executed declaration in compliance with 37 CFR 1.497(a) and (b) has not been provided.

This application is being forwarded to the United States Designated/Elected Office for further processing including mailing a Notification of Missing Requirements Under 35 U.S.C. 371 in the United States Designated/Elected Office (DO/EO/US) (Form PCT/DO/EO/905) indicating that an oath or declaration in compliance with 37 CFR 1.497(a) and (b) and a $130.00 surcharge fee pursuant to 37 CFR 1.492(h) are required.

James Thomson

James Thomson
Attorney Advisor
Office of PCT Legal Administration

Tel.: (571) 272-3302

07 SEP 2005

UNITED STATES PATENT AND TRADEMARK OFFICE

Commissioner for Patents
United States Patent and Trademark Office
P.O. Box 1450
Alexandria, VA 22313-1450
www.uspto.gov

JACOBSON HOLMAN PLLC
400 7th Street, NW, Suite 600
Washington, DC 20004

| | | |
|---|---|---|
| In re Application of: HORROBIN, et al. | : | |
| U.S. Application No.: 10/528,114 | : | |
| PCT No.: PCT/GB03/03985 | : | DECISION ON PAPERS |
| International Filing Date: 16 September 2003 | : | SUBMITTED UNDER |
| Priority Date: 16 September 2002 | : | 37 CFR 1.42 |
| Attorney's Docket No.: P70482US0 | : | |
| For: EICOSAPENTAENOIC ACID (EPA) FOR | : | |
| TREATING ANOREXIA NERVOSA (AN) AND | : | |
| BULIMIA | : | |

This decision is issued in response to the 16 June 2005 submission of a declaration executed on behalf of deceased inventor David Frederick HORROBIN by his Executrix Sherri CLARKSON, treated herein as a submission under 37 CFR 1.42. No petition fee is required.

## BACKGROUND

On 16 March 2005, applicants filed a Transmittal Letter requesting entry into the national stage in the United States of America under 35 U.S.C. § 371. The Transmittal Letter was accompanied by, among other materials, payment of the basic national fee.

On 16 June 2005, applicants filed the declaration considered herein. The declaration was executed by the surviving co-inventor and on behalf of the deceased co-inventor by his Executrix.

## DISCUSSION

Pursuant to 37 CFR § 1.42, first sentence:

> "In case of the death of the inventor, the legal representative (executor, administrator, etc.) of the deceased inventor may make the necessary oath or declaration, and apply for and obtain a patent."

37 CFR 1.497(b)(2) states the following:

> (2) If the person making the oath or declaration or any supplemental oath or declaration is not the inventor (§§ 1.42, 1.43, or § 1.47) the oath or declaration shall state the relationship of the person to the inventor, and, upon information and belief, the facts which the inventor would have been

> required to state. If the person signing is the legal representative of a deceased inventor, the oath or declaration shall also state that the person is a legal representative and the citizenship, residence, and mailing address of the legal representative.

The declaration submitted on 16 June 2005 identifies the deceased inventor and states the inventor's country of citizenship and residence, as required for compliance with 37 CFR 1.497(a)(3). The declaration is signed by Sherri CLARKSON as "Executrix" of the deceased inventor, states the relationship to the deceased (i.e., Executrix), and provides the Executrix' country of citizenship and residency. Accordingly, the declaration complies with the requirements of 37 CFR 1.497(b)(2).

Based on the above, it is appropriate, at this time, to accord the application status under 37 CFR 1.42.

## CONCLUSION

For the above reasons, the request for status under 37 CFR 1.42 is **GRANTED**. The declaration filed on 16 June 2005 is accepted as complying with 37 CFR 1.497.

The application will be forwarded to the National Stage Processing Branch of the Office of PCT Operations for further processing in accordance with this decision. The date under 35 U.S.C. 371(c)(1), (c)(2), and (c)(4) is 16 June 2005.

Richard M. Ross
PCT Petitions Attorney
Office Of PCT Legal Administration
Telephone: (571) 272-3296
Facsimile: (571) 273-0459

07 SEP 2005

07 SEP 2005

P70482US0

UNITED STATES PATENT AND TRADEMARK OFFICE

Commissioner for Patents
United States Patent and Trademark Office
P.O. Box 1450
Alexandria, VA 22313-1450
www.uspto.gov

TC 9-12-05

JACOBSON HOLMAN PLLC
400 7th Street, NW, Suite 600
Washington, DC 20004

| | | |
|---|---|---|
| In re Application of: HORROBIN, et al. | : | |
| U.S. Application No.: 10/528,114 | : | |
| PCT No.: PCT/GB03/03985 | : | DECISION ON PAPERS |
| International Filing Date: 16 September 2003 | : | SUBMITTED UNDER |
| Priority Date: 16 September 2002 | : | 37 CFR 1.42 |
| Attorney's Docket No.: P70482US0 | : | |
| For: EICOSAPENTAENOIC ACID (EPA) FOR | : | |
| TREATING ANOREXIA NERVOSA (AN) AND | : | |
| BULIMIA | : | |

This decision is issued in response to the 16 June 2005 submission of a declaration executed on behalf of deceased inventor David Frederick HORROBIN by his Executrix Sherri CLARKSON, treated herein as a submission under 37 CFR 1.42. No petition fee is required.

## BACKGROUND

On 16 March 2005, applicants filed a Transmittal Letter requesting entry into the national stage in the United States of America under 35 U.S.C. § 371. The Transmittal Letter was accompanied by, among other materials, payment of the basic national fee.

On 16 June 2005, applicants filed the declaration considered herein. The declaration was executed by the surviving co-inventor and on behalf of the deceased co-inventor by his Executrix.

## DISCUSSION

Pursuant to 37 CFR § 1.42, first sentence:

> "In case of the death of the inventor, the legal representative (executor, administrator, etc.) of the deceased inventor may make the necessary oath or declaration, and apply for and obtain a patent."

37 CFR 1.497(b)(2) states the following:

> (2) If the person making the oath or declaration or any supplemental oath or declaration is not the inventor (§§ 1.42, 1.43, or § 1.47) the oath or declaration shall state the relationship of the person to the inventor, and, upon information and belief, the facts which the inventor would have been

BEST AVAILABLE COPY

required to state. If the person signing is the legal representative of a deceased inventor, the oath or declaration shall also state that the person is a legal representative and the citizenship, residence, and mailing address of the legal representative.

The declaration submitted on 16 June 2005 identifies the deceased inventor and states the ventor's country of citizenship and residence, as required for compliance with 37 CFR 497(a)(3). The declaration is signed by Sherri CLARKSON as "Executrix" of the deceased ventor, states the relationship to the deceased (i.e., Executrix), and provides the Executrix' ıuntry of citizenship and residency. Accordingly, the declaration complies with the quirements of 37 CFR 1.497(b)(2).

Based on the above, it is appropriate, at this time, to accord the application status under ' CFR 1.42.

## CONCLUSION

For the above reasons, the request for status under 37 CFR 1.42 is **GRANTED**. The :claration filed on 16 June 2005 is accepted as complying with 37 CFR 1.497.

The application will be forwarded to the National Stage Processing Branch of the Office 'PCT Operations for further processing in accordance with this decision. The date under 35 .S.C. 371(c)(1), (c)(2), and (c)(4) is 16 June 2005.

chard M. Ross
:T Petitions Attorney
ffice Of PCT Legal Administration
:lephone: (571) 272-3296
ıcsimile: (571) 273-0459

BEST AVAILABLE COPY

UNITED STATES PATENT AND TRADEMARK OFFICE

Commissioner for Patents
United States Patent and Trademark Office
P.O. Box 1450
Alexandria, VA 22313-1450
www.uspto.gov

16 FEB 2006

JACOBSON HOLMAN PLLC
400 7th Street, NW, Suite 600
Washington, DC 20004

| | | |
|---|---|---|
| In re Application of: | : | |
| HORROBIN, David, F., et al. | : | DECISION |
| U.S. Application No.: 10/528,114 | : | |
| PCT No.: PCT/GB03/03985 | : | |
| International Filing Date: 16 September 2003 | : | |
| Priority Date: 16 September 2002 | : | |
| Atty Docket No.: P70482US0 | : | |
| For: EICOSAPENTAENOIC ACID (EPA) | : | |
| FOR TREATING ANOREXIA | : | |
| NERVOSA (AN) AND BULIMIA | : | |

This decision is issued in response to the "Response To Notification Of Missing Requirements" filed 27 December 2005, treated herein as a petition under 37 CFR 1.181 to withdraw the Notification Of Missing Requirements (Form PCT/DO/EO/905) mailed 24 October 2005. No petition fee is required.

## BACKGROUND

The procedural background herein was set forth in the decision mailed herein on 07 September 2005. In that decision, the declaration filed by applicants on 16 June 2005 was found acceptable under 37 CFR 1.42 and 1.497.

On 24 October 2005, the United States Designated/Elected Office (DO/EO/US) mailed a "Notification Of Missing Requirements" (Form PCT/DO/EO/905) requiring submission of a declaration in compliance with 37 CFR 1.497.

On 27 December 2005, applicants filed the "Response To Notification Of Missing Requirements" treated herein as a petition under 37 CFR 1.181. The petition includes a copy of the previously filed declaration, as well as a copy of a return postcard itemizing the declaration and bearing a USPTO receipt stamp dated 16 June 2005 and a copy of the decision mailed herein on 07 September 2005.

## DISCUSSION

As set forth in the decision mailed on 07 September 2005, the declaration filed by applicants on 16 June 2005 is acceptable under 37 CFR 1.42 and 37 CFR 1.497. The "Notification Of Missing Requirements" mailed 24 October 2005, based as it was on applicants' purported failure to file a declaration acceptable under 37 CFR 1.497, is therefore appropriately vacated.

## CONCLUSION

The petition to withdraw the Notification of Missing Requirements (Form PCT/DO/EO/905) mailed 24 October 2005 is **GRANTED**.

The Notification of Missing Requirements (Form PCT/DO/EO/905) mailed 24 October 2005 is hereby **VACATED**.

This application is being returned to the National Stage Processing Branch of the International Division for further processing in accordance with this decision and with the decision mailed herein on 07 September 2005. As noted in the previous decision, the date under 35 U.S.C. 371(c)(1), (c)(2), and (c)(4) is 16 June 2005.

Richard M. Ross
Attorney Advisor
Office of PCT Legal Administration
Telephone: (571) 272-3296
Facsimile: (571) 273-0459

#11

UNITED STATES PATENT and TRADEMARK OFFICE

COMMISSIONER FOR PATENTS
UNITED STATES PATENT AND TRADEMARK OFFICE
P.O BOX 1450
ALEXANDRIA, VA 22313-1450
www.uspto.gov

12 JUN 2007

CANTOR COLBURN LLP
55 Griffin Road South
Bloomfield, CT 06002

| | | |
|---|---|---|
| In re Application of | : | DECISION ON |
| OLE NYMANN et al | : | |
| Application No. 10/528,131 | : | |
| PCT No.: PCT/DK03/000604 | : | |
| Int. Filing Date: 18 September 2003 | : | |
| Priority Date: 18 September 2002 | : | PETITION UNDER |
| Attorney's Docket No.: GRP-0105 | : | |
| For: AN ELECTRICAL MOTOR/GENERATOR... | : | |
| ROTOR POLE SHOES | : | 37 CFR 1.137 (b) |

This decision is in response to applicant's' "PETITION FOR REVIAVAL OF AN APPLICATION FOR PATENT ABANDONED UNINTENTIONALLY UNDER 37 CFR 1.137(b)," filed on 03 January 2007.

## BACKGROUND

On 18 September 2003, this international application was filed. The deadline for paying the basic national fee in the United States under 35 U.S.C. 371 and 37 CFR 1.495 was 18 March 2005.

On 16 March 2005, applicants filed a Transmittal letter for entry into the national stage in the United States Patent and Trademark Office (USPTO), which was accompanied by, the basic national fee. No executed declaration or oath was filed at such time.

On 08 August 2005, the United States Designated/Elected Office mailed a Notification of Missing Requirements under 35 U.S.C. 371 (Form PCT/DO/EO/905) indicating that the oath or declaration complying with 37 CFR 1.497(a) and (b), identifying the application by the International application number and International filing date must be furnished within the time period set forth. The notification set a two months time limit or 32 months from the priority date for the application, whichever is later to respond, and that failure to properly respond would result in abandonment.

On 22 August 2005, applicants submitted a response to the Notice of Missing Requirements. However, it did not include a proper executed declaration.

On 12 January 2006, the USPTO mailed a NOTIFICATIO OF DEFECTIVE RESPONSE (PCT/DO/EO/916) indicating that the current oath or declaration does not comply with 37 CFR 1.497(a) and (b) in that it: is not executed in accordance with either 37 CFR 1.66 or 37 CFR 1.68.

On 03 February 2006, filed a second improper executed declaration.

On 17 April 2006, the United States Patent and Trademark Office mailed the Notification of Abandonment (PCT/DO/EO/909) since the application was abandoned for failure to file a proper executed declaration in that each declaration names all the inventors.

On 03 January 2007, applicants filed the instant petition under 37 CFR 1.137(b), which was accompanied by the petition fee and a properly executed declaration.

## DISCUSSION

A grantable petition to revive an abandoned application under 37 CFR 1.137(b) must be accompanied by (1) the required reply, unless previously filed. In a nonprovisional application abandoned for failure to prosecute, the required reply may be met by the filing of a continuing application; (2) the petition fee as set forth in § 1.17(m); and (3) a statement that the entire delay in filing the required reply from the due date for the reply until the filing of a grantable petition pursuant to this paragraph was unintentional. The Commissioner may require additional information where there is a question whether the delay was unintentional; and (4) any terminal disclaimer (and fee as set forth in § 1.20 (d)) required pursuant to paragraph (c) of this section.

Petitioner has provided: (1) the proper reply by submitting a properly executed declaration, (2) the petition fee set forth in §1.17(m) and (3) the proper statement under 137(b)(3). In this application, no terminal disclaimer is required.

Accordingly, the petition is deemed to satisfy requirements (1) - (4) under 37 CFR 1.137(b).

## DECISION

The petition under 37 CFR 1.137(b) is **GRANTED**.

This application is being returned to the United States Designated/Elected Office (DO/EO/US) for continued processing. The 35 USC 371(c)(1),(c)(2), and (c)(4) date of this application is **03 January 2007.**

Rafael Bacares
PCT Legal Examiner
PCT Legal Office
Telephone: (571) 272-3276
Facsimile : (571) 273-0459

SPE RESPONSE FOR CERTIFICATE OF CORRECTION

Paper No.: X

DATE : February 26, 2008

TO SPE OF : ART UNIT 2832

SUBJECT : Request for Certificate of Correction for Appl. No.: 10/528133 Patent No.: 7280023 B2

A response is requested with respect to a request for a certificate of correction.

With respect to the change(s) requested to correct Office and/or Applicant's errors, should the patent read as shown in the certificate of correction attached herewith or the COCIN document(s), in IFW images for the above-identified patented application? No new matter should be introduced, nor should the scope or meaning of the claims be changed.

If the response is for an IFW, within 7 days, please complete and forward the response, to the employee (named below) via scanning into application images, using document code COCX.

DO NOT SENT TO ATTORNEY

If the response is for a paper file wrapper, please complete the response and forward the response with the paper file wrapper, to the employee (named below), within 7 days, to:

**Certificates of Correction Branch (CofC)**
**South Tower - 9A22**
**Palm Location 7580**

You can fax the Directors/SPE response to 571-270-9990

*LAMONTE NEWSOME*
**Certificates of Correction Branch**
**703-308-9390 ext. 112**

**Thank You For Your Assistance**

**The request for issuing the above-identified correction(s) is hereby:**
Note your decision on the appropriate box.

| | |
|---|---|
| x**Approved** | **All** changes apply. |
| ❑ **Approved in Part** | Specify below which changes **do not** apply. |
| ❑ **Denied** | State the reasons for denial below. |

Formatted: Indent: Left: 1.22"

**Comments:** Changes are corrections to grammatical errors, no changes to scope of claim.

ELVIN ENAD
SUPERVISORY PATENT EXAMINER
2832

PTO/SB/44 (08-07)
Approved for use through 08/31/2007. OMB 0651-0033
U.S. Patent and Trademark Office; U.S. DEPARTMENT OF COMMERCE
Under the Paperwork Reduction Act of 1995, no persons are required to respond to a collection of information unless it displays a valid OMB control number.
(Also Form PTO-1050)

# UNITED STATES PATENT AND TRADEMARK OFFICE
## CERTIFICATE OF CORRECTION



PATENT NO. : 7,280,023 B2

APPLICATION NO.: 10/528,133

ISSUE DATE : October 9, 2007

INVENTOR(S) : Horst Hendel

It is certified that an error appears or errors appear in the above-identified patent and that said Letters Patent is hereby corrected as shown below:

In claim 4, line 1, "ignition coil according claim" should read -- ignition coil according to claim--.

In claim 7, line 1, "ignition coil according claim" should read -- ignition coil according to claim--.

In claim 13, line 1, "ignition coil according claim" should read -- ignition coil according to claim--.

OK
EM

MAILING ADDRESS OF SENDER (Please do not use customer number below):

Barley Snyder LLC
1000 Westlakes Drive, Suite 275
Berwyn, PA 19312

This collection of information is required by 37 CFR 1.322, 1.323, and 1.324. The information is required to obtain or retain a benefit by the public which is to file (and by the USPTO to process) an application. Confidentiality is governed by 35 U.S.C. 122 and 37 CFR 1.14. This collection is estimated to take 1.0 hour to complete, including gathering, preparing, and submitting the completed application form to the USPTO. Time will vary depending upon the individual case. Any comments on the amount of time you require to complete this form and/or suggestions for reducing this burden, should be sent to the Chief Information Officer, U.S. Patent and Trademark Office, U.S. Department of Commerce, P.O. Box 1450, Alexandria, VA 22313-1450. DO NOT SEND FEES OR COMPLETED FORMS TO THIS ADDRESS. **SEND TO: Attention Certificate of Corrections Branch, Commissioner for Patents, P.O. Box 1450, Alexandria, VA 22313-1450.**

*If you need assistance in completing the form, call 1-800-PTO-9199 and select option 2.*

19 JUL 2005

UNITED STATES PATENT AND TRADEMARK OFFICE

Commissioner for Patents
United States Patent and Trademark Office
P.O. Box 1450
Alexandria, VA 22313-1450
www.uspto.gov

PERKINS COIE LLP
P.O. Box 1247
Seattle, WA 98111-1247

| | | |
|---|---|---|
| In re Application of | : | |
| PITSOS, Errikos | : | |
| Application No.: 10/528,135 | : | |
| PCT No.: PCT/EP03/07829 | : | |
| Int. Filing Date: 18 July 2003 | : | **DECISION** |
| Priority Date: 17 September 2002 | : | |
| Attorney Docket No.: 417508003US | : | |
| For: METHOD AND SYSTEMS FOR PROVIDING A SECURE DATA DISTRIBUTION VIA PUBLIC NETWORKS | : | |

Applicant's "Petition for Revival of an Application for Patent Abandoned Unintentionally Under 37 CFR 1.137(b)" filed on 23 June 2005 is hereby **GRANTED** as follows:

The basic national fee and petition fee have been paid. Applicant states that "[t]he entire delay in filing the required reply from the due date for the reply until the filing of a grantable petition under 37 CFR 1.137(b) was unintentional" as required by 37 CFR 1.137(b)(3). A terminal disclaimer is not required. Accordingly, all requirements under 37 CFR 1.137(b) have been satisfied.

A signed oath or declaration has not been provided.

This application is being forwarded to the United States Designated/Elected Office for further processing including mailing a Notification of Missing Requirements Under 35 U.S.C. 371 in the United States Designated/Elected Office (DO/EO/US) (Form PCT/DO/EO/905) indicating that a declaration in compliance with 37 CFR 1.497(a) and (b) and a surcharge fee is required.

James Thomson
Attorney Advisor
PCT Legal Administration

Tel.: (571) 272-3302

UNITED STATES PATENT AND TRADEMARK OFFICE

UNITED STATES DEPARTMENT OF COMMERCE
United States Patent and Trademark Office
Address: COMMISSIONER FOR PATENTS
P.O. Box 1450
Alexandria, Virginia 22313-1450
www.uspto.gov

FINNEGAN, HENDERSON, FARABOW, GARRETT & DUNNER LLP
901 NEW YORK AVENUE, NW
WASHINGTON, DC 20001-4413

Mail Date: 06/09/2010

| | | |
|---|---|---|
| **Applicant** | : Akiyoshi Murakami | : DECISION ON REQUEST FOR |
| **Patent Number** | : 7715280 | : RECALCULATION of PATENT |
| **Issue Date** | : 05/11/2010 | : TERM ADJUSTMENT IN VIEW |
| **Application No** | : 10/528,145 | : OF WYETH |
| **Filed** | : 10/25/2005 | : |
| | | : |

The Patentee's Request for Recalculation is **DISMISSED.**

This Request is deemed ineligible for consideration for one or more of the following reasons:

(A). The patent for which PTA recalculation is requested is either a design or reissue application or is a reexamination proceeding;

(B). The patent for which PTA recalculation is requested resulted from a utility or plant application filed under 35 USC 111(a) before May 29, 2000 and no CPA filed in the application on/after May 29, 2000;

(C). The patent for which PTA recalculation is requested resulted from an international application in which the international filing date was before May 29, 2000 and no CPA filed in the application on/after May 29, 2000;

(D). The patent for which PTA recalculation is requested issued on/after March 2, 2010;

(E). The Request for Recalculation was filed more than 180 days after the grant date of the patent and the request was not filed within two months of a dismissal of a request for reconsideration of the of the patent term under 37 CFR 1.705(d);

(F). The Request for Recalculation is not solely limited to USPTO pre-Wyeth interpretation of 35 U.S.C. 154(b)(2)(A);

or

(G). A civil action was filed pursuant to 35 U.S.C. 154(b)(4)(A)concerning the same patent at issue in this request.

Patentee may file a reply to this decision dismissing the Request for Recalculation. Patentee must file such reply within one month or thirty days, whichever is longer, of the mail date of the decision dismissing the Request for Recalculation. No fee is required if patentee is asserting in the reply that the dismissal for ineligibility is improper.

Patentee should use document code PET.OP if electronically filing a reply to this dismissal. If the USPTO finds that the request was improperly deemed ineligible, the USPTO will mail applicant a recalculation determination.

Patentee should be aware that in order to preserve the right to review in the United States District Court for the District of Columbia of the USPTO patent term adjustment determination, patentee must ensure that he or she also take the steps required under 35 U.S.C. 154(b)(4)(A). Nothing in the request for recalculation should be construed as providing an alternative time frame for commencing a civil action under 35 U.S.C. 154 (b)(4)(A).

Any questions concerning this decision should be directed to the Office of Patent Legal Administration at 571-272-7702.

UNITED STATES PATENT AND TRADEMARK OFFICE

Commissioner for Patents
United States Patent and Trademark Office
P.O. Box 1450
Alexandria, VA 22313-1450
www.uspto.gov

**STAAS & HALSEY LLP**
**SUITE 700**
**1201 NEW YORK AVENUE, N.W.**
**WASHINGTON, DC 20005**

COPY MAILED

AUG 2 9 2008

| | | |
|---|---|---|
| In re Application of | : | |
| McDougall, et. al. | : | |
| Application No. 10/528,146 | : | ON PETITION |
| Filed: February 6, 2007 | : | |
| Attorney Docket No. 469.1118 | : | |

This is a decision on the petition under the unintentional provisions of 37 CFR 1.137(b), filed June 23, 2008, to revive the above-identified application.

The petition is **DISMISSED**.

Any request for reconsideration of this decision must be submitted within TWO (2) MONTHS from the mail date of this decision. Extensions of time under 37 CFR 1.136(a) are permitted. The reconsideration request should include a cover letter entitled "Renewed Petition under 37 CFR 1.137(b)." This is **not** a final agency action within the meaning of 5 U.S.C. § 704.

The application became abandoned for failure to submit an oath or declaration in compliance with 37 CFR 1.67(a) in a timely manner in reply to the Notice of Allowability, mailed July 26, 2007, which set a period for reply of three (3) months. Accordingly, this application became abandoned on October 27, 2007. A Notice of Abandonment was mailed April 23, 2008.

A grantable petition under 37 CFR 1.137(b) must be accompanied by: (1) the required reply, unless previously filed; (2) the petition fee as set forth in 37 CFR 1.17(m); (3) a statement that the entire delay in filing the required reply from the due date for the reply until the filing of a grantable petition pursuant to 37 CFR 1.137(b) was unintentional; and (4) any terminal disclaimer (and fee as set forth in 37 CFR 1.20(d)) required by 37 CFR 1.137(d). Where there is a question as to whether either the abandonment or the delay in filing a petition under 37 CFR 1.137 was unintentional, the Director may require additional information. See MPEP 711.03(c)(II)(C) and (D). The instant petition lacks item(s) (1).

In regards to item (1), above, the declaration filed with the petition does not meet the requirements of 37 CFR 1.63 because it contains uninitialed/undated alterations.[1] Specifically, there are undated alterations in the signature block for joint inventors McDougall and Slade. A new oath or declaration in compliance with 37 CFR 1.63 and 1.67, listing the residence, mailing address and citizenship of all of the inventors and signed by the inventors to whom the corrections pertain (i.e., joint inventors McDougall and Slade) must be provided with any renewed petition.

Further correspondence with respect to this matter should be addressed as follows:

By Mail: Mail Stop PETITION
Commissioner for Patents
P. O. Box 1450
Alexandria, VA 22313-1450

By hand: U. S. Patent and Trademark Office
Customer Service Window, Mail Stop Petitions
Randolph Building
401 Dulany Street
Alexandria, VA 22314

The centralized facsimile number is **(571) 273-8300.**

Telephone inquiries concerning this decision should be directed to the undersigned at (571) 272-

Sherry D. Brinkley
Petitions Examiner
Office of Petitions

[1] See 37 CFR 1.52 (c).

UNITED STATES PATENT AND TRADEMARK OFFICE

Commissioner for Patents
United States Patent and Trademark Office
P.O. Box 1450
Alexandria, VA 22313-1450
www.uspto.gov

**STAAS & HALSEY LLP**
**SUITE 700**
**1201 NEW YORK AVENUE, N.W.**
**WASHINGTON, DC 20005**

COPY MAILED
DEC 17 2008

| | | |
|---|---|---|
| In re Application of | : | |
| McDougall et al. | : | |
| Application No. 10/528,146 | : | DECISION ON PETITION |
| Filed: February 6, 2007 | : | |
| Attorney Docket No. 469.1118 | : | |

This is a decision on the renewed petition under the unintentional provisions of 37 CFR 1.137(b), filed October 24, 2008, to revive the above-identified application.

The application became abandoned for failure to submit an oath or declaration in compliance with 37 CFR 1.67(a) in a timely manner in reply to the Notice of Allowability, mailed July 26, 2007. On June 23, 2008 a petition under 37 CFR 1.137(b) was filed; however, the petition was dismissed in a decision mailed August 29, 2008. In response, on October 24, 2008 the present petition was filed.

The petition is **GRANTED**.

The petition satisfies the requirements of 37 CFR 1.137(b) in that petitioner has supplied (1) a declaration in compliance with 37 CFR 1.63 and 1.67(a); (2) the petition fee of $1,540; and (3) an adequate statement of unintentional delay.

Telephone inquiries concerning this decision should be directed to Alicia Kelley at (571) 272-6059.

This application is being referred to the Office of Data Management for processing into a patent.

/SDB/
Sherry D. Brinkley
Petitions Examiner
Office of Petitions

UNITED STATES PATENT AND TRADEMARK OFFICE

UNITED STATES DEPARTMENT OF COMMERCE
United States Patent and Trademark Office
Address: COMMISSIONER FOR PATENTS
P.O. Box 1450
Alexandria, Virginia 22313-1450
www.uspto.gov

CROWELL & MORING LLP
INTELLECTUAL PROPERTY GROUP
P.O. BOX 14300
WASHINGTON, DC 20044-4300

Mail Date: 04/21/2010

| | | |
|---|---|---|
| **Applicant** | : Hannelore Dornbach | : DECISION ON REQUEST FOR |
| **Patent Number** | : 7576636 | : RECALCULATION of PATENT |
| **Issue Date** | : 08/18/2009 | : TERM ADJUSTMENT IN VIEW |
| **Appliction No** | : 10/528,148 | : OF WYETH AND NOTICE OF INTENT TO |
| **Filed** | : 10/13/2005 | : ISSUE CERTIFICATE OF CORRECTION |
| | | : |

The Request for Recalculation is **GRANTED** to the extent indicated.

The patent term adjustment has been determined to be **642** days. The USPTO will *sua sponte* issue a certificate of correction reflecting the amount of PTA days determined by the recalculation.

Prior to the issuance of the certificate of correction, the USPTO will afford patentee an opportunity to be heard and request reconsideration. Accordingly, patentee has **one month or thirty (30) days**, whichever is longer, to file a request for reconsideration of this patent term adjustment calculation. See 35 U.S.C. 154(b)(3)(B)(ii) and 37 CFR 1.322(a)(4). No extensions of time will be granted under 37 CFR 1.136.

Patentee should use document code PET.OP if electronically filing a request for reconsideration of this patent term adjustment calculation. The patentee must also include the information required by 37 CFR 1.705(b)(2) and the fee required by 37 CFR 1.18(e). If patentee does not file a timely request for reconsideration of this patent term adjustment calculation including the information required by 37 CFR 1.705(b)(2) and the fee required by 37 CFR 1.18(e), the USPTO will issue a certificate of correction reflecting the PTA determination noted above.

Patentee should be aware that in order to preserve the right to review in the United States District Court for the District of Columbia of the USPTO patent term adjustment determination, patentee must ensure that he or she also take the steps required under 35 U.S.C. 154(b)(4)(A) in a timely manner. Nothing in the request for recalculation should be construed as providing an alternative time frame for commencing a civil action under 35 U.S.C. 154(b)(4)(A).

Any questions concerning this decision should be directed to the Office of Patent Legal Administration at 571-272-7702.

UNITED STATES PATENT AND TRADEMARK OFFICE

Commissioner for Patents
United States Patent and Trademark Office
P.O. Box 1450
Alexandria, VA 22313-1450
www.uspto.gov

MAIL

JAN 23 2008

DIRECTOR'S OFFICE
TECHNOLOGY CENTER 2600

WENDEROTH, LIND & PONACK L.L.P.
2033 K. STREET, NW
SUITE 800
WASHINGTON DC 20006

| | | |
|---|---|---|
| In re Application of<br>KADONO, SHINYA, et al.<br>Application No. 10/528,151<br>Filed: March 17, 2005<br>Attorney Docket No. 2005_0443A | : | DECISION ON REQUEST TO PARTICIPATE IN PATENT PROSECUTION HIGHWAY PILOT PROGRAM AND PETITION TO MAKE SPECIAL UNDER 37 CFR 1.102(d) |

This is a decision on the request to participate in the Patent Prosecution Highway (PPH) pilot program and the petition under 37 CFR 1.102(d), filed December 11, 2007, to make the above-identified application special.

The request and petition are **GRANTED**.

A grantable request to participate in the PPH pilot program and petition to make special require:

(1) The U.S. application must validly claim priority under 35 U.S.C. 119(a) to one or more applications filed in the JPO;
(2) Applicant must submit a copy of the allowable/patentable claim(s) from the JPO application(s) along with an English translation thereof and a statement that the English translation is accurate;
(3) All the claims in the U.S. application must sufficiently correspond or be amended to sufficiently correspond to the allowable/patentable claim(s) in the JPO application(s);
(4) Examination of the U.S. application has not begun;
(5) Applicant must submit a copy of all the office actions from each of the JPO application(s) containing the allowable/patentable claim(s) along with an English translation thereof and a statement that the English translation is accurate;
(6) Applicant must submit an IDS listing the documents cited by the JPO examiner in the JPO office action along with copies of documents except U.S. patents or U.S. patent application publications; and
(7) The required petition fee under 37 CFR 1.17(h).

The request to participate in the PPH pilot program and petition comply with the above requirements. Accordingly, the above-identified application has been accorded "special" status.

Telephone inquiries concerning this decision should be directed to Kenneth Wieder at 571-272-2986.

All other inquiries concerning the examination or status of the application should be directed to Patent Application Information Retrieval (PAIR) system.

The application is being forwarded to the examiner for action on the merits commensurate with this decision.

Kenneth A. Wieder

Kenneth Wieder
Quality Assurance Specialist
Technology Center 2600
Communications

08 SEP 2006

United States Patent and Trademark Office

Commissioner for Patents
United States Patent and Trademark Office
P.O. Box 1450
Alexandria, VA 22313-1450
www.uspto.gov

NIXON & VANDERHYE, PC
901 NORTH GLEBE ROAD, 11TH FLOOR
ARLINGTON VA 22203

| | | |
|---|---|---|
| In re Application of<br>Brown et al.<br>Application No. 10/528,156<br>PCT No.: PCT/NZ03/00210<br>Int. Filing Date: 17 September 2003<br>Priority Date: 17 September 2002<br>Atty. Docket No.: 4450-12<br>For: DNA-Targeted Benzotriazine 1,4-Dioxides And Their Use In Cancer | : | DECISION |

This is in response to the correspondence filed on 09 February 2006.

## BACKGROUND

This international application was filed on 17 September 2003, claimed an earliest priority date of 17 September 2002, and designated the U.S. The International Bureau communicated a copy of the published international application to the USPTO on 01 April 2004. The 30 month time period for paying the basic national fee in the United States expired at midnight on 17 March 2005. Applicants filed, *inter alia*, the basic national fee on 17 March 2005.

On 17 August 2005, applicants submitted a declaration of the inventors.

On 31 August 2005, a Notification of Missing Requirements (Form PCT/DO/EO/905) was mailed to applicants, requiring the submission of an oath or declaration compliant with 37 CFR 1.497(a) and (b) as well as an initial paper or compact disc of the "Sequence Listing," an amendment directing its entry, a computer-readable form (CRF) of the sequence listing, an amendment directing its entry, and a statement that the computer-readable form (CRF) of the sequence listing is identical to the paper or compact disc copy and (where applicable) contains no new matter.

On 21 October 2005, counsel filed a response, stating that "the executed Declaration was filed on August 17, 2005" and that "the present application does not contain a separate sequence listing. Therefore, Applicants respectfully request that the sequence listing requirement be withdrawn."

On 23 January 2006, a Notification of Defective Response (Form PCT/DO/EO/916) was mailed to applicants, again requiring the submission of an oath or declaration compliant with 37 CFR 1.497(a) and (b) as well as an initial paper or compact disc of the "Sequence Listing," an amendment directing its entry, a computer-readable form (CRF) of the sequence listing, an amendment directing its entry, and a statement that the computer-readable form (CRF) of the sequence listing is identical to the paper or compact disc copy and (where applicable) contains no new matter. It was observed that "Inventors name listed as Martin J. Brown on International Application and as J. Martin Brown on Declaration. Please clarify."

## DISCUSSION

Regarding the requirements related to a "Sequence Listing,' counsel states that "Applicants respectfully submit that the present application does not contain a sequence listing, which Applicants stated in the Response to Notification of Missing Requirements filed on October 21, 2005. Please note your records accordingly." Based on counsel's statements and a review of the application file, it would be appropriate to conclude that the requirements related to a "Sequence Listing" in the Forms PCT/DO/EO/905 and PCT/DO/EO/916 were inapposite, and those requirements therefore are **WITHDRAWN**.

With regard to the declaration,

> Applicants respectfully submit that the first inventor's name, "J. Martin Brown," is correctly identified on the executed Declaration and Assignment documents filed August 17, 2005. The inventor's name is incorrectly listed as "Martin J. Brown" on the face of the PCT International Application.

Since this discrepancy clearly represents more than a mere typographic error or phonetic misspelling of applicant's name, a proper petition and fee under 37 CFR 1.182 would be required to resolve this matter. *See* MPEP § 605.04(b) and MPEP § 201.03(b).

## CONCLUSION

The declaration filed on 17 August 2005 is **NOT ACCEPTED**, without prejudice.

If reconsideration on the merits of this petition is desired, a proper response must be filed within **TWO (2) MONTHS** from the mail date of this decision. Extensions of time may be obtained under 37 CFR 1.136(a). Failure to timely file a proper response will result in **ABANDONMENT**.

Please direct any further correspondence with respect to this matter to the Assistant Commissioner for Patents, Mail Stop PCT, P.O. Box 1450, Alexandria, VA 22313-1450, and address the contents of the letter to the attention of the PCT Legal Office.

Daniel Stemmer
PCT Legal Examiner
Office of PCT Legal Administration

George M. Dombroske
PCT Legal Examiner
Office of PCT Legal Administration
Tel: (571) 272-3283
Fax: (571) 273-0459

United States Patent and Trademark Office

Commissioner for Patents
United States Patent and Trademark Office
P.O. Box 1450
Alexandria, VA 22313-1450
www.uspto.gov

NIXON & VANDERHYE, PC
901 NORTH GLEBE ROAD, 11TH FLOOR
ARLINGTON VA 22203

02 APR 2007

| | | |
|---|---|---|
| In re Application of<br>Brown et al.<br>Application No. 10/528,156<br>PCT No.: PCT/NZ03/00210<br>Int. Filing Date: 17 September 2003<br>Priority Date: 17 September 2002<br>Atty. Docket No.: 4450-12<br>For: DNA-Targeted Benzotriazine 1,4-Dioxides And Their Use In Cancer | : | DECISION |

This is in response to the "Request For Reconsideration" filed on 08 November 2006.

## DISCUSSION

In a Decision mailed on 08 September 2006, the declaration filed on 17 August 2005 was not accepted, without prejudice, because

> Since this discrepancy clearly represents more than a mere typographic error or phonetic misspelling of applicant's name, a proper petition and fee under 37 CFR 1.182 would be required to resolve this matter. *See* MPEP § 605.04(b) and MPEP § 201.03(b).

In response, counsel argues that "The error in the inventor's name is of a typographical nature, since it involves the transposition of the letter "J" (compare "J. Martin Brown" and "Martin J. Brown"). Furthermore, the error was made during publication by the International Bureau (IB)."

On 08 March 2007, the International Bureau republished the instant international application. In the republished version, the name of the inventor in controversy has been corrected to "BROWN, J Martin." Based on the totality of the evidence currently of record, it would be appropriate to accept the name "J. Martin Brown" as it appears on the executed declaration filed on 17 August 2005.

## CONCLUSION

The declaration filed on 17 August 2005 is **ACCEPTED**.

This application is being forwarded to the National Stage Processing Branch for further processing. Its date under 35 U.S.C. 371(c)(1), (2) and (4) is **17 August 2005**.

George Dombroske
PCT Legal Examiner
Office of PCT Legal Administration
Tel: (571) 272-3283
Fax: (571) 273-0459

UNITED STATES PATENT AND TRADEMARK OFFICE

Commissioner for Patents
United States Patent and Trademark Office
P.O. Box 1450
Alexandria, VA 22313-1450
www.uspto.gov

23 AUG 2007

POLLACK, P.C.
The Chrysler Building
132 East 43rd Street, Suite 760
New York, NY 10017

| | |
|---|---|
| In re Application of:<br>SHARMA, Ravi, Ivan<br>U.S. Application No.: 10/528,164<br>PCT No.: PCT/US2004/024486<br>International Filing Date: 26 July 2004<br>Priority Date: 25 July 2003<br>Atty Docket No.: 741038.1001<br>For: INVERTED KEYBOARD INSTRUMENT AND METHOD FOR PLAYING THE SAME | DECISION ON RENEWED PETITION TO WITHDRAW HOLDING OF ABANDONMENT (37 CFR 1.181) AND PETITION FOR REVIVAL (37 CFR 1.137(b)) |

This decision is issued in response to the "Applicant's Reply To Decision On Petition To Withdraw Holding Of Abandonment And Request For Consideration" filed 26 April 2007 and supplemented on 16 May 2007.

The 16 May 2007 supplement included payment of the required small entity petition fee for the petition under 37 CFR 1.137(b); no petition fee is required for the renewed petition under 37 CFR 1.181.

## BACKGROUND

The background for this application was set forth in the decision mailed herein on 12 January 2007. In that decision, applicant's petition under 37 CFR 1.181 to withdraw the holding of abandonment was dismissed without prejudice based on applicant's failure to provide an adequate showing that payment of the basic national fee was submitted prior to the expiration of the thirty-month deadline. The decision also stated that the petition for revival under 37 CFR 1.137(b) filed by applicant had not been considered on the merits, based on applicant's failure to submit the required petition fee.

On 26 April 2007, applicant filed "Applicant's Reply To Decision On Petition To Withdraw Holding Of Abandonment And Request For Consideration," considered herein in part as a renewed petition under 37 CFR 1.181.

On 16 May 2007, applicant filed a supplemental response that included a credit card payment form with respect to the petition fee for the petition for revival under 37 CFR 1.137(b).

## DISCUSSION

### A. Renewed Petition To Withdraw Abandonment Under 37 CFR 1.181

Pursuant to 37 CFR 1.495(b), the present application became abandoned for failure to submit the basic national fee prior to the expiration of thirty months from the priority date. As set forth in the previous decision, in order for the abandonment to be withdrawn under 37 CFR 1.181, applicant is required to provide "an acceptable showing that applicant filed the basic national fee herein prior to the expiration of the thirty-month deadline on 25 January 2006." The present submission does not include any additional evidence showing that the required basic national fee was timely filed, nor does petitioner maintain that such fee was timely paid. Accordingly, the renewed petition under 37 CFR 1.181 for withdrawal of the holding of abandoned is properly dismissed.

Petitioner argues that the holding of abandonment should be withdrawn because of the USPTO's purported "pattern of misinformation" with respect to the status of this application and failure to provide applicant with timely notice that the basic national fee had not been received. To grant petitioner's request would require waiver of the timing requirements under 37 CFR 1.495(b). However, petitioner has neither petitioned under 37 CFR 1.183 to waive the provisions of 37 CFR 1.495(b) nor paid the petition fee required under 37 CFR 1.183. Accordingly, consideration of waiver of the requirements of 37 CFR 1.495(b) will not be treated herein.

### B. Petition For Revival Under 37 CFR 1.137(b)

The 16 May 2007 supplement filed by applicant here included payment of the small entity petition fee required for consideration of the petition for revival of an unintentionally abandoned application under 37 CFR 1.137(b) filed 20 November 2006.[1]

Applicant's statement in the petition for revival that "the entire delay in filing the required reply from the due date of the required reply until the filing of a grantable petition under 37 CFR 1.137(b) was unintentional" satisfies the requirement of 37 CFR 1.137(b)(3).

Applicant has now submitted the basic national fee, and the requirements of 37 CFR 1.137(b) have been satisfied. Therefore, the request to revive the application pursuant to 37 CFR 1.137(b) is granted as to the United States of America.

## CONCLUSION

Applicant's renewed petition for withdrawal of the holding of abandonment under 37 CFR 1.181 is **DISMISSED**.

---

[1] Applicant asserts that the fee submittal was duplicative, in that the previously filed credit card payment form authorized a charge for "$950 + any additional fees required." However, pursuant to 37 CFR 1.23(b): "Payment of a fee by credit card must specify the amount to be charged to the credit card and such other information as is necessary to process the charge .... The Office will not accept a general authorization to charge fees to a credit card." Thus, applicant's general authorization to charge the credit card for "any additional fees required" was insufficient to permit the USPTO to charge applicant the petition fee for the petition under 37 CFR 1.137(b).

Applicant's petition for revival of the application under 37 CFR 1.137(b) is **GRANTED**.

This application is being referred to the National Stage Processing Branch of the Office of PCT Operations for further processing in accordance with this decision, including the mailing of a Notification Of Missing Requirements (Form PCT/DO/EO/905) requiring submission of an oath or declaration in compliance with 37 CFR 1.497 and the surcharge for filing the oath or declaration later than thirty months after the priority date.

Richard M. Ross
Attorney Advisor
Office of PCT Legal Administration
Telephone: (571) 272-3296
Facsimile: (571) 273-0459

12 JAN 2007

#5

UNITED STATES PATENT AND TRADEMARK OFFICE

Commissioner for Patents
United States Patent and Trademark Office
P.O. Box 1450
Alexandria, VA 22313-1450
www.uspto.gov

POLLACK, P.C.
The Chrysler Building
132 East 43rd Street, Suite 760
New York, NY 10017

| | |
|---|---|
| In re Application of:<br>SHARMA, Ravi, Ivan<br>U.S. Application No.: 10/528,164<br>PCT No.: PCT/US2004/024486<br>International Filing Date: 26 July 2004<br>Priority Date: 25 July 2003<br>Atty Docket No.: 741038.1001<br>For: INVERTED KEYBOARD INSTRUMENT AND METHOD FOR PLAYING THE SAME | DECISION ON PETITION TO WITHDRAW HOLDING OF ABANDONMENT (37 CFR 1.181) AND PETITION FOR REVIVAL (37 CFR 1.137(b)) |

This decision is issued in response to the "Petition To Withdraw Holding Of Abandonment Under 37 CFR 1.181" and the "Petition For Revival Of An International Application For Patent Designating The United States Abandoned Unintentionally Under 37 CFR 1.137(b)" filed 20 November 2006. No petition fee is required for the petition under 37 CFR 1.181; applicant has not submitted the required petition fee for the petition under 37 CFR 1.137(b).

## BACKGROUND

On 26 July 2004, applicant filed international application PCT/US2004/024486. The international application claimed a priority date of 26 July 2004, and it designated the United States. The deadline for submission of the basic national fee was thirty months from the priority date, i.e., 25 January 2006.

On 15 March 2005, applicants filed a Transmittal Letter for entry into the national stage in the United States. The Transmittal Letter does not indicate that it was accompanied by payment of the basic national fee, and the application file includes no record of payment of this fee. In addition, the submission did not include an express request to begin national examination procedures.

On 10 April 2006, the United States Designated/Elected Office (DO/EO/US) mailed a Notification Of Abandonment (Form PCT/DO/EO/909) indicating that the application was abandoned for failure to provide the full U.S. Basic National Fee by 30 months.

On 20 November 2006, the petitions considered herein were filed. The petition under 37 CFR 1.181 asserts that the papers filed to initiate this national stage application included a credit card payment of the required basic national fee (a copy of this form is included with the present

petition) and that the holding of abandonment is therefore improper. The petition for revival under 37 CFR 1.137(b) is provided as an alternative petition, should the petition under 37 CFR 1.181 be dismissed.

## DISCUSSION

### A. Petition To Withdraw Abandonment Under 37 CFR 1.181

Section 1893.01 of the MPEP states the following regarding commencement of the national stage in the United States (emphasis added):

> Subject to 35 U.S.C. 371(f), commencement of the national stage occurs upon expiration of the applicable time limit under PCT Article 22(1) or (2), or under PCT Article 39(1)(a). See 35 U.S.C. 371(b) and 37 CFR 1.491(a). PCT Articles 22(1), 22(2), and 39(1)(a) provide for a time limit of not later than the expiration of 30 months from the priority date. Thus, **in the absence of an express request for early processing of an international application under 35 U.S.C. 371(f) and compliance with the conditions provided therein, the U.S. national stage will commence upon expiration of 30 months from the priority date of the international application.** Pursuant to 35 U.S.C. 371(f), the national stage may commence earlier than 30 months from the priority date, provided applicant makes an express request for early processing and has complied with the applicable requirements under 35 U.S.C. 371(c).

As noted above, applicant here filed a Transmittal Letter seeking entry into the U.S. national stage on 15 March 2005, prior to the national stage entry date of 25 January 2006; however, the filing did not include an express request to begin national examination early, nor did it include all the requirements for such early commencement of national examination (i.e., an executed declaration). Thus regardless of when the national stage papers were filed, the USPTO could not commence national stage processing of the present application until thirty months from the priority date, i.e., 25 January 2006.

The present petition asserts that applicant was prejudiced by the USPTO's failure to notify it of the lack of a filing fee prior to the expiration of the thirty-month deadline; however, based on the above, this argument is unconvincing. Applicant's failure to request early commencement of national examination and to file the materials required for such early examination precluded the USPTO from processing this application until the thirty-month deadline had expired.[1]

---

[1] It is noted that, in recognition of problems of accuracy, memory and perception, 37 CFR § 1.2 states: "The action of the Patent and Trademark Office will be based exclusively on the written record in the Office. No attention will be paid to any alleged oral promise, stipulation, or understanding in relation to which there is disagreement or doubt." Thus, any confusion resulting from mis-communication between the applicant and the PCT Help Desk will not support granting of the requested relief.

By operation of law, an international application becomes abandoned with respect to the United States if payment of the basic national fee is not submitted prior to the expiration of the thirty-month deadline (see 35 U.S.C. 371(d) and 37 CFR 1.495(h)). Applicant's 15 March 2005 submission was the only filing herein prior to the expiration of the thirty-month deadline. Thus, for the present application to avoid becoming abandoned, the 15 March 2005 submission would have to have included payment of the basic national fee. A review of the application file does not indicate that the materials filed 15 March 2005 included payment of the basic national fee. Accordingly, by operation of law, the application became abandoned at midnight on 25 January 2006, and the subsequent mailing of Notification Of Abandonment on 10 April 2006 was therefore proper.

The present petition asserts that a credit card payment form authorizing a charge for the basic national fee was included with the materials filed 15 March 2005; a copy of the form is included with the present petition, as is a copy of a return postcard that itemizes the credit card form as part of the 15 March 2005 submission. However, the USPTO has no record of receiving or processing such a form, and applicant has failed to provide a copy of the return postcard bearing a USPTO receipt stamp (which would provide *prima facie* evidence that the credit card form was included with the materials filed 15 March 2005). It is noted that the Form PTO-1390 Transmittal Letter filed by applicant on 15 March 2005 does not indicate that a credit card form was included therewith.

Based on the above, applicant has not provided an adequate showing that payment of the basic national fee was submitted prior to the expiration of the thirty-month deadline. Accordingly, withdrawal of the abandonment under 37 CFR 1.181 is inappropriate on the present record.

**B. Petition For Revival Under 37 CFR 1.137(b)**

The present submission includes an alternative petition for revival of the international application under 37 CFR 1.137(b). However, applicant has not included payment of the $750 small entity petition fee required for such a petition. Accordingly, the petition for revival has not been considered on the merits.

## CONCLUSION

The petition to withdraw the holding of abandonment under 37 CFR 1.181 is **DISMISSED** without prejudice.

The alternative petition for revival under 37 CFR 1.137(b) has not been considered on the merits because the required petition fee was not included with the petition.

If reconsideration on the merits of the petition under 37 CFR 1.181 is desired, a proper response must be filed within **TWO (2) MONTHS** of the mail date of the present decision. Any request for reconsideration should include a cover letter entitled "Renewed To Withdraw Holding Of Abandonment" and must include an acceptable showing that applicant filed the basic national fee herein prior to the expiration of the thirty-month deadline on 25 January 2006.

If applicant seeks consideration on the merits of the petition under 37 CFR 1.137(b), payment of the appropriate petition fee must be submitted.

Please direct further correspondence with respect to this matter to Mail Stop PCT, Commissioner for Patents, P.O. Box 1450, Alexandria, Virginia 22313-1450, with the contents of the letter marked to the attention of the Office of PCT Legal Administration.

Richard M. Ross
Attorney Advisor
Office of PCT Legal Administration
Telephone: (571) 272-3296
Facsimile: (571) 273-0459

UNITED STATES PATENT AND TRADEMARK OFFICE

Commissioner for Patents
United States Patent and Trademark Office
P.O. Box 1450
Alexandria, VA 22313-1450
www.uspto.gov

#9

23 AUG 2007

POLLACK, P.C.
The Chrysler Building
132 East 43rd Street, Suite 760
New York, NY 10017

| | |
|---|---|
| In re Application of:<br>SHARMA, Ravi, Ivan<br>U.S. Application No.: 10/528,164<br>PCT No.: PCT/US2004/024486<br>International Filing Date: 26 July 2004<br>Priority Date: 25 July 2003<br>Atty Docket No.: 741038.1001<br>For: INVERTED KEYBOARD INSTRUMENT AND METHOD FOR PLAYING THE SAME | DECISION ON RENEWED PETITION TO WITHDRAW HOLDING OF ABANDONMENT (37 CFR 1.181) AND PETITION FOR REVIVAL (37 CFR 1.137(b)) |

This decision is issued in response to the "Applicant's Reply To Decision On Petition To Withdraw Holding Of Abandonment And Request For Consideration" filed 26 April 2007 and supplemented on 16 May 2007.

The 16 May 2007 supplement included payment of the required small entity petition fee for the petition under 37 CFR 1.137(b); no petition fee is required for the renewed petition under 37 CFR 1.181.

## BACKGROUND

The background for this application was set forth in the decision mailed herein on 12 January 2007. In that decision, applicant's petition under 37 CFR 1.181 to withdraw the holding of abandonment was dismissed without prejudice based on applicant's failure to provide an adequate showing that payment of the basic national fee was submitted prior to the expiration of the thirty-month deadline. The decision also stated that the petition for revival under 37 CFR 1.137(b) filed by applicant had not been considered on the merits, based on applicant's failure to submit the required petition fee.

On 26 April 2007, applicant filed "Applicant's Reply To Decision On Petition To Withdraw Holding Of Abandonment And Request For Consideration," considered herein in part as a renewed petition under 37 CFR 1.181.

On 16 May 2007, applicant filed a supplemental response that included a credit card payment form with respect to the petition fee for the petition for revival under 37 CFR 1.137(b).

## DISCUSSION

### A. Renewed Petition To Withdraw Abandonment Under 37 CFR 1.181

Pursuant to 37 CFR 1.495(b), the present application became abandoned for failure to submit the basic national fee prior to the expiration of thirty months from the priority date. As set forth in the previous decision, in order for the abandonment to be withdrawn under 37 CFR 1.181, applicant is required to provide "an acceptable showing that applicant filed the basic national fee herein prior to the expiration of the thirty-month deadline on 25 January 2006." The present submission does not include any additional evidence showing that the required basic national fee was timely filed, nor does petitioner maintain that such fee was timely paid. Accordingly, the renewed petition under 37 CFR 1.181 for withdrawal of the holding of abandoned is properly dismissed.

Petitioner argues that the holding of abandonment should be withdrawn because of the USPTO's purported "pattern of misinformation" with respect to the status of this application and failure to provide applicant with timely notice that the basic national fee had not been received. To grant petitioner's request would require waiver of the timing requirements under 37 CFR 1.495(b). However, petitioner has neither petitioned under 37 CFR 1.183 to waive the provisions of 37 CFR 1.495(b) nor paid the petition fee required under 37 CFR 1.183. Accordingly, consideration of waiver of the requirements of 37 CFR 1.495(b) will not be treated herein.

### B. Petition For Revival Under 37 CFR 1.137(b)

The 16 May 2007 supplement filed by applicant here included payment of the small entity petition fee required for consideration of the petition for revival of an unintentionally abandoned application under 37 CFR 1.137(b) filed 20 November 2006.[1]

Applicant's statement in the petition for revival that "the entire delay in filing the required reply from the due date of the required reply until the filing of a grantable petition under 37 CFR 1.137(b) was unintentional" satisfies the requirement of 37 CFR 1.137(b)(3).

Applicant has now submitted the basic national fee, and the requirements of 37 CFR 1.137(b) have been satisfied. Therefore, the request to revive the application pursuant to 37 CFR 1.137(b) is granted as to the United States of America.

## CONCLUSION

Applicant's renewed petition for withdrawal of the holding of abandonment under 37 CFR 1.181 is **DISMISSED**.

---

[1] Applicant asserts that the fee submittal was duplicative, in that the previously filed credit card payment form authorized a charge for "$950 + any additional fees required." However, pursuant to 37 CFR 1.23(b): "Payment of a fee by credit card must specify the amount to be charged to the credit card and such other information as is necessary to process the charge .... The Office will not accept a general authorization to charge fees to a credit card." Thus, applicant's general authorization to charge the credit card for "any additional fees required" was insufficient to permit the USPTO to charge applicant the petition fee for the petition under 37 CFR 1.137(b).

Applicant's petition for revival of the application under 37 CFR 1.137(b) is **GRANTED**.

This application is being referred to the National Stage Processing Branch of the Office of PCT Operations for further processing in accordance with this decision, including the mailing of a Notification Of Missing Requirements (Form PCT/DO/EO/905) requiring submission of an oath or declaration in compliance with 37 CFR 1.497 and the surcharge for filing the oath or declaration later than thirty months after the priority date.

Richard M. Ross
Attorney Advisor
Office of PCT Legal Administration
Telephone: (571) 272-3296
Facsimile: (571) 273-0459

UNITED STATES PATENT AND TRADEMARK OFFICE

18 JUL 2008

Commissioner for Patents
United States Patent and Trademark Office
P.O. Box 1450
Alexandria, VA 22313-1450
www.uspto.gov

POLLACK, P.C.
The Chrysler Building
132 East 43rd Street, Suite 760
New York, NY 10017

| | | |
|---|---|---|
| In re Application of: | : | |
| SHARMA, Ravi, Ivan | : | DECISION |
| U.S. Application No.: 10/528,164 | : | |
| PCT No.: PCT/US2004/024486 | : | |
| International Filing Date: 26 July 2004 | : | |
| Priority Date: 25 July 2003 | : | |
| Atty Docket No.: 741038.1001 | : | |
| For: INVERTED KEYBOARD | : | |
| INSTRUMENT AND METHOD FOR | : | |
| PLAYING THE SAME | : | |

This decision is issued in response to "Applicant's Response To Decision On Alleged Renewed Petition To Withdraw Holding Of Abandonment" filed 08 January 2008 and the "Request for Higher Level Review of Decisions ..." filed 01 May 2008.

In a letter received 12 May 2008, Mr. Pollack has withdrawn the above two requests. Accordingly, "Applicant's Response To Decision On Alleged Renewed Petition To Withdraw Holding Of Abandonment" filed 08 January 2008 and the "Request for Higher Level Review of Decisions ..." filed 01 May 2008 are dismissed as moot.

A review of the file reveals that applicant's credit card was apparently charged twice for the $750 petition fee under 37 CFR 1.137(b). Accordingly, applicant will be granted a refund of $750.

Leonard E. Smith

Leonard E. Smith
Supervisory PCT Legal Examiner
Office of PCT Legal Administration
Telephone: (571) 272-3297
Facsimile: (571) 273-0459

UNITED STATES PATENT AND TRADEMARK OFFICE

Commissioner for Patents
United States Patent and Trademark Office
P.O. Box 1450
Alexandria, VA 22313-1450
www.uspto.gov

2 8 JUL 2008

POLLACK, P.C.
The Chrysler Building
132 East 43rd Street, Suite 760
New York, NY 10017

| | | |
|---|---|---|
| In re Application of: | : | |
| SHARMA, Ravi, Ivan | : | DECISION |
| U.S. Application No.: 10/528,164 | : | |
| PCT No.: PCT/US2004/024486 | : | |
| International Filing Date: 26 July 2004 | : | |
| Priority Date: 25 July 2003 | : | |
| Atty Docket No.: 741038.1001 | : | |
| For: INVERTED KEYBOARD | : | |
| INSTRUMENT AND METHOD FOR | : | |
| PLAYING THE SAME | : | |

This decision is issued in response to "PETITION FOR REFUND UNDER 37 C.F.R. 1.26 OF FEE PAID FOR PETITION TO REVIVE APPLICATION UNDER 37 C.F.R. 1.137(B)" filed 09 June 2008.

## BACKGROUND

The present application went abandoned by operation of law based on applicant's failure to submit the U.S. basic national fee prior to the expiration of thirty months from the priority date. Subsequently, applicant filed both a petition to withdraw the holding of abandonment and, alternatively, a petition for revival of the application. In a decision mailed 23 August 2007, this Office dismissed the petition to withdraw the holding of abandonment, but granted the petition for revival of the application under 37 CFR 1.137(b). Thus, the present application is currently pending and awaiting further processing.

On 20 November 2006, applicant filed a "Petition To Withdraw The Holding Of Abandonment Under 37 CFR 1.181" and a "Petition For Revival Of An International Application For Patent Designating The U.S. Abandoned Unintentionally Under 37 CFR 1.137(b). The petition under 37 CFR 1.181 asserted that a Credit Card Payment Form authorizing a charge for the basic national fee was timely filed on 15 March 2005 (with the original national stage papers) and that abandonment of the application was therefore improper. This petition also asserted that the USPTO had not notified applicant of his failure to file the required fees prior to the expiration of the thirty month deadline, and that applicant had been mislead by the USPTO regarding the status of the application prior to abandonment. The accompanying petition under 37 CFR 1.137(b) indicated that the abandonment of the application was unintentional.

On 12 January 2007, this Office mailed a decision dismissing without prejudice applicant's petitions under 37 CFR 1.181 and 1.137(b). With respect to the petition under 37 CFR 1.181, the decision found that applicant had not provided an adequate showing that the fee payment authorization had been included with the materials filed prior to the expiration of the thirty-month deadline (i.e., a return postcard bearing a USPTO receipt stamp). The decision stated that applicant's petition for revival under 37 CFR 1.137(b) had not been considered due to applicant's failure to provide the required petition fee.

On 26 April 2007, applicant filed "Applicant's Reply To Decision On Petition To Withdraw Holding Of Abandonment And Request For Consideration" (this filing was supplemented on 02 May 2007).

On 23 August 2007, this Office mailed a decision dismissing applicant's renewed petition for withdrawal of the holding of abandonment and granting the petition for revival under 37 CFR 1.137(b).

Despite the granting of applicant's petition for revival under 37 CFR 1.137(b), on 08 January 2008, applicant filed the "Applicant's Response To Decision On Alleged Renewed Petition To Withdraw Holding Of Abandonment."

On 12 May 2008 applicant withdrew the petition filed on 08 January 2008.

On 12 May 2008, a "Withdrawal of Previously Sent Notice" was mailed to applicant which indicated that the "Notice of Abandonment" mailed on 04/10/2006 was sent in error and is hereby withdrawn. As will be discussed below, this form is incorrect.

## DISCUSSION

On 12 May 2008, a "Withdrawal of Previously Sent Notice" was mailed to applicant which indicated that the "Notice of Abandonment" mailed on 04/10/2006 was sent in error and is hereby withdrawn. This form is incorrect. The language used for this form is when the Notice of Abandonment was improper. As noted in the file wrapper and this decision, the application became abandoned by operation of law due to the failure to pay the basic national fee at the expiration of 30 months from the priority date. Accordingly, the Notice of Abandonment mailed on 04/10/2006 was proper and is not vacated. The application has been restored to pending status by the granting of the petition under 37 CFR 1.137(b) to revive the international application.

## CONCLUSION

Based on the above, applicant's request for a refund of the fee required for a petition to revive under 37 CFR 1.137(b) is **DISMISSED** without prejudice.

The application is again referred to the National Stage Processing Branch of the Office of PCT Operations for further processing, including the mailing of a Notification Of Missing Requirements.

Leonard E. Smith
Supervisory PCT Legal Examiner
Office of PCT Legal Administration
Telephone: (571) 272-3297
Facsimile: (571) 273-0459

UNITED STATES PATENT AND TRADEMARK OFFICE

Commissioner for Patents
United States Patent and Trademark Office
P.O. Box 1450
Alexandria, VA 22313-1450
www.uspto.gov

FITCH EVEN TABIN AND FLANNERY
120 SOUTH LA SALLE STREET
SUITE 1600
CHICAGO IL 60603-3406

COPY MAILED

AUG 0 3 2007

OFFICE OF PETITIONS

Applicant: Van Hoecke, et al.
Appl. No.: 10/528,167
International Filing Date: September 17, 2003
Title: COMPOSITION FOR REPLACING MILK POWDER
Attorney Docket No.: 7393/84301
Pub. No.: US 2006/0134309 A1
Pub. Date: June 22, 2006

This is a decision on the request for corrected of patent application publication under 37 CFR 1.221(b), received on July 7, 2006, for the above-identified application.

The instant request is that the application be republished because the patent application publication contains incorrect claims.

The request is granted.

The amendment received by the Office on April 5, 2005, which was improperly scanned into this application and published has been removed from the application.

Inquiries relating to this matter may be directed to Mark O. Polutta at (571) 272-7709.

Mark O. Polutta
Office of Patent Legal Administration
Office of the Deputy Commissioner
for Patent Examination Policy

23 JUN 2005

UNITED STATES PATENT AND TRADEMARK OFFICE

COMMISSIONER FOR PATENTS
UNITED STATES PATENT AND TRADEMARK OFFICE
P.O. BOX 1450
ALEXANDRIA, VA 22313-1450
www.uspto.gov

Richard A. Arrett
6109 Blue Circle Drive
Suite 2000
Minnetonka, MN 55343-9185

| | |
|---|---|
| In re Application of | : |
| KUHN et al. | : |
| Application No.: 10/528,169 | : |
| PCT No.: PCT/EP02/06649 | : DECISION |
| Int. Filing Date: 17 June 2002 | : |
| Priority Date: 21 June 2001 | : ON PETITION UNDER |
| Docket No.: H01.2-11410 | : |
| For: A DECIVE FOR THICKENING | : 37 CFR 1.10(e) |
| OR DEHYDRATING SLUDGES, | : |
| SEDIMENTS FROM WATERS ... | : |

This decision is in response to applicant's "Petition Pursuant to 37 C.F.R. 1.10(e)" filed in the United States Patent and Trademark Office on 10 March 2005. No petition fee is required.

## BACKGROUND

On 17 June 2002, applicant filed international application PCT/EP02/06649. The international application claimed priority to a foreign application having a priority date of 21 June 2001. The deadline for entry into the national stage in the United States was 21 December 2003.

On 10 March 2005, applicant filed a "Facsimile Transmittal Letter" accompanied by the petition addressed here, an Express Mailing label, a transmittal letter (Form PTO-1390), and a two-page copy of another transmittal letter dated 18 December 2003. The 18 December 2003 transmittal sheet lists a 13 page English translation as having been provided. However, the subsequently filed 10 March 2005 petition does not list a translation of the international application and such a translation has not been provided. Furthermore, the petition filed pursuant to 37 C.F.R. 1.10(e) does not claim to have originally provided a translation.

## DISCUSSION

37 CFR 1.10(e) states:

(e) Any person mailing correspondence addressed as set out in Sec. 1.1(a) to the Office with sufficient postage utilizing the "Express Mail Post Office to Addressee" service of the USPS but not received by the Office, may petition the

Director to consider such correspondence filed in the Office on the USPS deposit date, provided that:

(1) The petition is filed promptly after the person becomes aware that the Office has no evidence of receipt of the correspondence;

(2) The number of the "Express Mail" mailing label was placed on the paper(s) or fee(s) that constitute the correspondence prior to the original mailing by "Express Mail";

(3) The petition includes a copy of the originally deposited paper(s) or fee(s) that constitute the correspondence showing the number of the "Express Mail" mailing label thereon, a copy of any returned postcard receipt, a copy of the "Express Mail" mailing label showing the "date-in," a copy of any other official notation by the USPS relied upon to show the date of deposit, and, if the requested filing date is a date other than the "date-in" on the "Express Mail" mailing label or other official notation entered by the USPS, a showing pursuant to paragraph (d)(3) of this section that the requested filing date was the date the correspondence was deposited in the "Express Mail Post Office to Addressee" service prior to the last scheduled pickup for that day; and

(4) The petition includes a statement which establishes, to the satisfaction of the Director, the original deposit of the correspondence and that the copies of the correspondence, the copy of the "Express Mail" mailing label, the copy of any returned postcard receipt, and any official notation entered by the USPS are true copies of the originally mailed correspondence, original "Express Mail" mailing label, returned postcard receipt, and official notation entered by the USPS.

Items (1), (2), (3) and (4) have been satisfied as to those papers provided. With regard to item (1) the petition was filed promptly. With regard to items (2)-(4) it is noted that petition does not expressly state that the "copies" of the documents attached to the petition are true copies of those papers and fees originally filed on 18 December 2003. Given the context of the use of the term "copies" in the petition, counsel's statement is construed as representing that the attached copies are in fact true copies of those papers and fees originally filed on 18 December 2003. If this interpretation is incorrect, applicants must **IMMEDIATELY** notify the Office of PCT Legal administration of such fact. As such it is clear that the Express Mail mailing label number was placed on the correspondence prior to mailing. In addition, the copy of the Express Mail label shows a date in of 18 December 2003. The copies of the papers attached to the 10 March 2005 petition are accepted as having been submitted on 18 December 2003.

## CONCLUSION

For the reasons set forth above, the petition under 37 CFR 1.10(e) is GRANTED. The copies of the Form PTO-1390, the preliminary amendment and the "Transmittal Letter" will be accepted as filed on 18 December 2003. Pursuant to authorization provided on Form PTO-1390 counsel's deposit account will be charged the Basic National Fee.

This application is being forwarded to the National Stage Processing Division of the Office of the PCT Operations for continued processing, in accordance with this decision, including issuance of a Notification of Missing Requirements indicating that an oath or declaration of the inventors, a translation into the English language of the international application, the surcharge for late filing of the oath or declaration and the processing fee for the late filing of the English translation are required.

Craig Thompson
PCT Legal Administration Detailee
Office of PCT Legal Administration
Telephone: 571-272-6094
Facsimile: 571-272-0459

Boris Milef
PCT Legal Examiner
PCT Legal Administration

UNITED STATES PATENT AND TRADEMARK OFFICE

COMMISSIONER FOR PATENTS
UNITED STATES PATENT AND TRADEMARK OFFICE
P.O. BOX 1450
ALEXANDRIA, VA 22313-1450
www.uspto.gov

AKIN GUMP STRAUSS HAUER & FELD L.L.P.
ONE COMMERCE SQUARE
2005 MARKET STREET, SUITE 2200
PHILADELPHIA PA 19103

COPY MAILED

AUG 08 2006

OFFICE OF PETITIONS

Applicant: Inoue et al.
Appl. No.: 10/528,174
International Filing Date: August 2, 2004
Title: DIRECT-CURRENT POWER SUPPLY AND BATTERY-POWERED ELECTRONIC APPARATUS EQUIPPED WITH THE POWER SUPPLY
Attorney Docket No.: 8661-520US
Pub. No.: US 2006/0006850 A1
Pub. Date: January 12, 2006

This is a decision on the request for a corrected patent application publication under 37 CFR 1.221(b), filed on March 6, 2006, for the above-identified application.

The request is DISMISSED.

Applicant requests that the application be republished because the patent application publication contains a material error as the Office improperly inserted the word "AND" between the words "APPARATUS" and "EQUIPPED."

37 CFR 1.221 (b) is applicable "only when the Office makes a material mistake which is apparent from Office records.... Any request for a corrected publication or revised patent application publication other than provided as provided in paragraph (a) of this section must be filed within two months from the date of the patent application publication. This period is not extendable." A material mistake must affect the public's ability to appreciate the technical disclosure of the patent application publication, to determine the scope of the patent application publication, or to determine the scope of the provisional rights that an applicant may seek to enforce upon issuance of a patent. [1]

The error noted by requestor wherein the word "AND" is improperly inserted between the words "APPARATUS" and "EQUIPPED." is an Office error but the mistake is not a material error under 37 CFR 1.221(b). The error is a typographical error, which is clearly understandable to one of ordinary skill in the art in reading the application and claims. The mistake is a minor typographical, which does not affect the understanding of the application. The mistake does not affect the public's ability to appreciate the technical disclosure of the patent application

[1] Changes to Implement Eighteen-Month Publication of Patent Applications, 65 FR 57023, 57038 (Sept. 20, 2000), 1239, Off. Gaz. Pat. Office Notices 63, 75 (Oct. 10, 2000) (final rule).

publication, or determine the scope of the patent application publication or determine the scope of the provisional rights that an applicant may seek to enforce upon issuance of a patent.

On September 19, 2005, a Filing Receipt was mailed by the Office, which listed the title as "DIRECT-CURRENT POWER SUPPLY AND BATTERY-POWERED ELECTRONIC APPARATUS AND EQUIPPED WITH THE POWER SUPPLY." To avoid this type of problem or to make a change in the title in the future, applicant's representative should make request a corrected filing receipt.

The applicant is advised that a "request for republication of an application previously published" may be filed under 37 CFR 1.221 (a). Such a request for republication "must include a copy of the application compliance with the Office's electronic filing system requirements and be accompanied by the publication fee set forth in § 1.18 (d) and the processing fee set forth in § 1.17 (i)." If the request for republication does not comply with the electronic filing system requirements, the republication will not take place and the publication fee set forth in § 1.18 (d) will be refunded. The processing fee will be retained.

Any request for republication under 37 CFR 1.221(a), must be submitted via the old EFS system and questions or request for reconsideration of the decision, should be addressed as follows:

By mail to: Mail Stop PGPUB
Commissioner for Patents
P.O. Box 1450
Alexandria, Va. 22313-1450

By facsimile: 571-273-8300

Inquiries relating to this matter may be directed to Mark Polutta at (571) 272-7709 (voice).

Mark Polutta
Senior Legal Advisor
Office of Patent Legal Administration
Office of the Deputy Commissioner
for Patent Examination Policy

UNITED STATES PATENT AND TRADEMARK OFFICE

COMMISSIONER FOR PATENTS
UNITED STATES PATENT AND TRADEMARK OFFICE
P.O. BOX 1450
ALEXANDRIA, VA 22313-1450
www.uspto.gov

BUCHANAN, INGERSOLL & ROONEY PC
POST OFFICE BOX 1404
ALEXANDRIA VA 22313-1404

Applicant: Detief Baranski
Appl. No.: 10/528,195
International Filing Date: September 17, 2003
Title: ANTENNA PANE
Attorney Docket No.: 1021500-000135
Pub. No.: 2006/0152421 A1
Pub. Date: July 13, 2006

COPY MAILED

SEP 1 4 2007

OFFICE OF PETITIONS

This is a decision on the request for a corrected patent application publication under 37 CFR 1.221(b), received on August 16, 2006, for the above-identified application.

The request is DISMISSED.

Applicant requests that the application be republished because the patent application publication contains a material error whereby international priority dates are incorrect on the front page of the publication and there are material errors in Paragraphs [0010] and [0053].

37 CFR 1.221 (b) is applicable "only **when the Office makes a material mistake which is apparent from Office records**.... Any request for a corrected publication or revised patent application publication other than provided as provided in paragraph (a) of this section must be filed within two months from the date of the patent application publication. This period is not extendable." A material mistake must affect the public's ability to appreciate the technical disclosure of the patent application publication, to determine the scope of the patent application publication, or to determine the scope of the provisional rights that an applicant may seek to enforce upon issuance of a patent. [1]

The failure to include a foreign priority claim to application PCT/EP02/10399, in the foreign priority information on the front page of the published patent application is an Office error but it is not a material error, as required by 37 CFR 1.221(b). The error in the foreign priority claim is not a material mistake because it does not affect the public's ability to appreciate the technical disclosure of the patent application publication, to determine the scope of the patent application publication or to determine the scope of the provisional rights that an applicant may seek to enforce upon issuance of a patent. The specification and claims were accurately published, thus

[1] Changes to Implement Eighteen-Month Publication of Patent Applications, 65 FR 57023, 57038 (Sept. 20, 2000), 1239, Off. Gaz. Pat. Office Notices 63, 75 (Oct. 10, 2000) (final rule).

one can read and understand the content of the application. The error also does not affect the use of the patent application publication as a prior art reference, because the foreign priority date is not useable as a reference date.

On April 4, 2006, a Filing Receipt was mailed by the Office. To avoid this type of problem in the future, applicant's representative should make request a corrected filing receipt.

The priority claim to DE 103 14 094.8 filed March 27, 2003 has been deleted from the Office electronic records because the Combined Declaration and Power of Attorney received on October 28, 2005 included a priority claim to the PCT application by did not include a claim to the German application. See 37 CFR 1.76(d).

The errors noted in paragraphs [0010] and [0053] are not material mistakes by the by the Office. The missing text is illegible in the application specification as filed. As such, these are not material mistakes by the Office. The illegibility of the text can be seen in the Specification Document in Public PAIR. As noted in MPEP 1130, the applicant must check applicant's records (or the PAIR records) to determine whether the papers submitted to the office contain the alleged material error.

It would greatly benefit the Office if **applicant did not provide copies of papers**, which were previously submitted or **a complete copy of the pre-grant publication**, as it unnecessarily increases the cost to the Office. See 37 CFR 1.4(b). A request for corrected publication need only point out what was printed incorrectly in the application, where the error occurs in the publication and where the correct text or drawing is found in the application papers. Marked up relevant copies of the applications papers and the pre-grant publication may facilitate processing of the request, where it is not readily apparent where the error occurs. If it is not clear why the error is a material error, further explanation may be warranted.

The applicant is advised that a "request for republication of an application previously published" may be filed under 37 CFR 1.221(a). Such a request for republication "must include a copy of the application compliance with the Office's electronic filing system requirements and be accompanied by the publication fee set forth in § 1.18 (d) and the processing fee set forth in § 1.17(i)." If the request for republication does not comply with the electronic filing system requirements, the republication will not take place and the publication fee set forth in § 1.18(d) will be refunded. The processing fee will be retained.

Any request for republication under 37 CFR 1.221(a), must be submitted via the EFS system as a "Pre-Grant Publication" and questions or request for reconsideration of the decision, should be addressed as follows:

By mail to: Mail Stop PGPUB
Commissioner for Patents
P.O. Box 1450
Alexandria, Va. 22313-1450

By facsimile: 571-273-8300

Inquiries relating to this matter may be directed to Mark Polutta at (571) 272-7709.

Mark Polutta
Senior Legal Advisor
Office of Patent Legal Administration
Office of the Deputy Commissioner
for Patent Examination Policy

Enclosure: Corrected Filing Receipt

UNITED STATES PATENT AND TRADEMARK OFFICE

UNITED STATES DEPARTMENT OF COMMERCE
United States Patent and Trademark Office
Address: COMMISSIONER FOR PATENTS
P.O. Box 1450
Alexandria, Virginia 22313-1450
www.uspto.gov

| APPL NO. | FILING OR 371(c) DATE | ART UNIT | FIL FEE REC'D | ATTY.DOCKET NO | TOT CLMS | IND CLMS |
|---|---|---|---|---|---|---|
| 10/528,195 | 10/28/2005 | 2821 | 1030 | 021500-135 | 20 | 1 |

**CONFIRMATION NO. 7014**

**CORRECTED FILING RECEIPT**

*OC000000025824486*

21839
BUCHANAN, INGERSOLL & ROONEY PC
POST OFFICE BOX 1404
ALEXANDRIA, VA 22313-1404

Date Mailed: 09/14/2007

Receipt is acknowledged of this nonprovisional patent application. The application will be taken up for examination in due course. Applicant will be notified as to the results of the examination. Any correspondence concerning the application must include the following identification information: the U.S. APPLICATION NUMBER, FILING DATE, NAME OF APPLICANT, and TITLE OF INVENTION. Fees transmitted by check or draft are subject to collection. Please verify the accuracy of the data presented on this receipt. **If an error is noted on this Filing Receipt, please write to the Office of Initial Patent Examination's Filing Receipt Corrections. Please provide a copy of this Filing Receipt with the changes noted thereon. If you received a "Notice to File Missing Parts" for this application, please submit any corrections to this Filing Receipt with your reply to the Notice. When the USPTO processes the reply to the Notice, the USPTO will generate another Filing Receipt incorporating the requested corrections (if appropriate).**

**Applicant(s)**

Detlef Baranski, Recklinghausen, GERMANY;

**Power of Attorney:** The patent practitioners associated with Customer Number **21839**.

**Domestic Priority data as claimed by applicant**

This application is a 371 of PCT/EP03/10141 09/12/2003

**Foreign Applications**

EUROPEAN PATENT OFFICE (EPO) PCT/EP02/10399 09/17/2002

**If Required, Foreign Filing License Granted:** 09/13/2007

**The country code and number of your priority application, to be used for filing abroad under the Paris Convention, is US10/528,195**

**Projected Publication Date:** Not Applicable

**Non-Publication Request:** No

**Early Publication Request:** No

**Title**

Antenna pane

**Preliminary Class**

343

## PROTECTING YOUR INVENTION OUTSIDE THE UNITED STATES

Since the rights granted by a U.S. patent extend only throughout the territory of the United States and have no effect in a foreign country, an inventor who wishes patent protection in another country must apply for a patent in a specific country or in regional patent offices. Applicants may wish to consider the filing of an international application under the Patent Cooperation Treaty (PCT). An international (PCT) application generally has the same effect as a regular national patent application in each PCT-member country. The PCT process **simplifies** the filing of patent applications on the same invention in member countries, but **does not result** in a grant of "an international patent" and does not eliminate the need of applicants to file additional documents and fees in countries where patent protection is desired.

Almost every country has its own patent law, and a person desiring a patent in a particular country must make an application for patent in that country in accordance with its particular laws. Since the laws of many countries differ in various respects from the patent law of the United States, applicants are advised to seek guidance from specific foreign countries to ensure that patent rights are not lost prematurely.

Applicants also are advised that in the case of inventions made in the United States, the Director of the USPTO must issue a license before applicants can apply for a patent in a foreign country. The filing of a U.S. patent application serves as a request for a foreign filing license. The application's filing receipt contains further information and guidance as to the status of applicant's license for foreign filing.

Applicants may wish to consult the USPTO booklet, "General Information Concerning Patents" (specifically, the section entitled "Treaties and Foreign Patents") for more information on timeframes and deadlines for filing foreign patent applications. The guide is available either by contacting the USPTO Contact Center at 800-786-9199, or it can be viewed on the USPTO website at http://www.uspto.gov/web/offices/pac/doc/general/index.html.

For information on preventing theft of your intellectual property (patents, trademarks and copyrights), you may wish to consult the U.S. Government website, http://www.stopfakes.gov. Part of a Department of Commerce initiative, this website includes self-help "toolkits" giving innovators guidance on how to protect intellectual property in specific countries such as China, Korea and Mexico. For questions regarding patent enforcement issues, applicants may call the U.S. Government hotline at 1-866-999-HALT (1-866-999-4158).

---

## LICENSE FOR FOREIGN FILING UNDER
## Title 35, United States Code, Section 184
## Title 37, Code of Federal Regulations, 5.11 & 5.15

**GRANTED**

The applicant has been granted a license under 35 U.S.C. 184, if the phrase "IF REQUIRED, FOREIGN FILING LICENSE GRANTED" followed by a date appears on this form. Such licenses are issued in all applications where the conditions for issuance of a license have been met, regardless of whether or not a license may be required as set forth in 37 CFR 5.15. The scope and limitations of this license are set forth in 37 CFR 5.15(a) unless an earlier license has been issued under 37 CFR 5.15(b). The license is subject to revocation upon written notification. The date indicated is the effective date of the license, unless an earlier license of similar scope has been granted under 37 CFR 5.13 or 5.14.

This license is to be retained by the licensee and may be used at any time on or after the effective date thereof

unless it is revoked. This license is automatically transferred to any related applications(s) filed under 37 CFR 1.53(d). This license is not retroactive.

The grant of a license does not in any way lessen the responsibility of a licensee for the security of the subject matter as imposed by any Government contract or the provisions of existing laws relating to espionage and the national security or the export of technical data. Licensees should apprise themselves of current regulations especially with respect to certain countries, of other agencies, particularly the Office of Defense Trade Controls, Department of State (with respect to Arms, Munitions and Implements of War (22 CFR 121-128)); the Bureau of Industry and Security, Department of Commerce (15 CFR parts 730-774); the Office of Foreign Assets Control, Department of Treasury (31 CFR Parts 500+) and the Department of Energy.

**NOT GRANTED**

No license under 35 U.S.C. 184 has been granted at this time, if the phrase "IF REQUIRED, FOREIGN FILING LICENSE GRANTED" DOES NOT appear on this form. Applicant may still petition for a license under 37 CFR 5.12, if a license is desired before the expiration of 6 months from the filing date of the application. If 6 months has lapsed from the filing date of this application and the licensee has not received any indication of a secrecy order under 35 U.S.C. 181, the licensee may foreign file the application pursuant to 37 CFR 5.15(b).

UNITED STATES PATENT AND TRADEMARK OFFICE

UNITED STATES DEPARTMENT OF COMMERCE
United States Patent and Trademark Office
Address: COMMISSIONER FOR PATENTS
P.O. Box 1450
Alexandria, Virginia 22313-1450
www.uspto.gov

VENABLE LLP
P.O. BOX 34385
WASHINGTON, DC 20043-9998

Mail Date: 04/21/2010

| | | |
|---|---|---|
| **Applicant** | : Per Halvarsson | : DECISION ON REQUEST FOR |
| **Patent Number** | : 7616087 | : RECALCULATION of PATENT |
| **Issue Date** | : 11/10/2009 | : TERM ADJUSTMENT IN VIEW |
| **Appliction No** | : 10/528,201 | : OF WYETH AND NOTICE OF INTENT TO |
| **Filed** | : 09/27/2005 | : ISSUE CERTIFICATE OF CORRECTION |
| | | : |

The Request for Recalculation is **GRANTED** to the extent indicated.

The patent term adjustment has been determined to be **0** days. The USPTO will *sua sponte* issue a certificate of correction reflecting the amount of PTA days determined by the recalculation.

Prior to the issuance of the certificate of correction, the USPTO will afford patentee an opportunity to be heard and request reconsideration. Accordingly, patentee has **one month or thirty (30) days**, whichever is longer, to file a request for reconsideration of this patent term adjustment calculation. See 35 U.S.C. 154(b)(3)(B)(ii) and 37 CFR 1.322(a)(4). No extensions of time will be granted under 37 CFR 1.136.

Patentee should use document code PET.OP if electronically filing a request for reconsideration of this patent term adjustment calculation. The patentee must also include the information required by 37 CFR 1.705(b)(2) and the fee required by 37 CFR 1.18(e). If patentee does not file a timely request for reconsideration of this patent term adjustment calculation including the information required by 37 CFR 1.705(b)(2) and the fee required by 37 CFR 1.18(e), the USPTO will issue a certificate of correction reflecting the PTA determination noted above.

Patentee should be aware that in order to preserve the right to review in the United States District Court for the District of Columbia of the USPTO patent term adjustment determination, patentee must ensure that he or she also take the steps required under 35 U.S.C. 154(b)(4)(A) in a timely manner. Nothing in the request for recalculation should be construed as providing an alternative time frame for commencing a civil action under 35 U.S.C. 154(b)(4)(A).

Any questions concerning this decision should be directed to the Office of Patent Legal Administration at 571-272-7702.

UNITED STATES PATENT and TRADEMARK OFFICE

COMMISSIONER FOR PATENTS
UNITED STATES PATENT AND TRADEMARK OFFICE
P.O BOX 1450
ALEXANDRIA, VA 22313-1450
www.uspto.gov

16 FEB 2007

MOTOROLA INC
600 NORTH US HIGHWAY 45
ROOM AS437
LIBERTYVILLE IL 60048-5343

| | | |
|---|---|---|
| In re Application of | : | DECISION ON |
| Buljore et al | : | |
| Application No.: 10/528,211 | : | |
| PCT No.: PCT/EP2003/50400 | : | |
| Int. Filing Date: 09 September 2003 | : | PETITION UNDER |
| Priority Date: 17 September 2002 | : | |
| Attorney's Docket No.: CR00560P | : | |
| For: COMMUNICATION UNIT AND... EQUIPMENT | : | 37 CFR 1.181 |

This decision is in response to the "PETITION UNDER 37 C.F.R. 1.182," which is being treated as a petition under 37 CFR 1.181 filed on 02 October 2006, requesting that 371(c) date is 17 March 2005.

## BACKGROUND

On 17 March 2005, applicants filed in the United States Patent and Trademark Office (PTO) a Transmittal Letter (Form PTO-1390) accompanied by, *inter alia*, the basic national fee. Applicants, however, did not satisfy the requirement set forth by 35 U.S.C. 371(c)(4) because no executed oath or declaration was filed at that time.

On 02 August 2005, the United States Designated/Elected Office (DO/EO/US) mailed a "NOTIFICATION OF MISSING REQUIREMENTS UNDER 35 U.S.C. 371 IN THE UNITED STATES DESIGNATED/ELECTED OFFICE (DO/EO/US)" (Form PCT/DO/EO/905) which informed applicant, inter alia, that an "Oath or Declaration of the inventors, in compliance with 37 CFR 1.497(a) and (b), identifying the application by International application number and international filing date." The notice also indicated that all of the items set forth above must be submitted within two (2) months from the date of this notice or by 32 months from the priority date for the application, whichever is later. Failure to properly respond will result in abandonment.

On 19 September 2005, applicants submitted a properly executed Declaration.

On 23 January 2006, the USPTO mailed a "NOTICE OF ACCEPTANCE OF APPLICATION UNDER 35 U.S.C. 371 AND 37 C.F.R. 1.495 (Form PCT/DO/EO/903)," indicating that date of receipt of 35 U.S.C. 371 (c)(1), (c)(2), and (c)(4) requirements is 19 September 2005, and a date of completion of all 35 USC 371 requirements of 19 September 2005.

On 02 October 2006, applicants filed the current petition pursuant 37 CFR 1.181 requesting a corrected filing receipt, stating that the filing or 35 USC 371(c) date is 17 March 2005 and not what is shown in the filing receipt as 19 September 2005.

## BACKGROUND

**35 U.S.C. 371 National stage: Commencement.**

> (c) The applicant shall file in the Patent and Trademark Office —
> (1) the national fee provided in section 41(a) of this title;
> (2) a copy of the international application, unless not required under subsection (a) of this section or already communicated by the International Bureau, and a translation into the English language of the international application, if it was filed in another language;
> (3) amendments, if any, to the claims in the international application, made under article 19 of the treaty, unless such amendments have been communicated to the Patent and Trademark Office by the International Bureau, and a translation into the English language if such amendments were made in another language;
> (4) an oath or declaration of the inventor (or other person authorized under chapter 11 of this title) complying with the requirements of section 115 of this title and with regulations prescribed for oaths or declarations of applicants;

The National Stage papers were received on 17 March 2005. However, the date that applicant competed the requirements under section (c) of 35 USC 371 is 19 September 2005 because this is the date that applicant submitted an executed declaration; thus, completing item 35 USC 371(c)(4).

Accordingly, 19 September 2005 is the date of completion of all 35 USC 371 requirements because it is the date that the applicable sections of 35 USC 371 were met.

## CONCLUSION

For reasons above, the petition under 37 CFR 1.181 is **DISMISSED**, without prejudice.

If reconsideration of the merits of the petition under 37 CFR 1.181 is desired, applicant must file a request for reconsideration within **TWO (2) MONTHS** from the mail date of this Decision. Any reconsideration request should include a cover letter entitled "Renewed Petition Under 37 CFR 1.181." Extensions of time are available under 37 CFR 1.136(a).

Any further correspondence with respect to this matter should be addressed to the Mail Stop PCT, Commissioner for Patents, Office of PCT Legal Administration, P.O. Box 1450, Alexandria, Virginia 22313-1450, with the contents of the letter marked to the attention of the Office of PCT Legal Administration.

Rafael Bacares
PCT Legal Examiner
PCT Legal Office
Tel: (571) 272-3276
Fax: (571) 273-0459

UNITED STATES PATENT AND TRADEMARK OFFICE

UNITED STATES DEPARTMENT OF COMMERCE
United States Patent and Trademark Office
Address: COMMISSIONER FOR PATENTS
P.O. Box 1450
Alexandria, Virginia 22313-1450
www.uspto.gov

LAW OFFICES OF JAMES E. WALTON, PLLC
1169 N. BURLESON BLVD.
SUITE 107-328
BURLESON, TX 76028

Mail Date: 04/21/2010

| | | |
|---|---|---|
| **Applicant** | : John V. Howard | : DECISION ON REQUEST FOR |
| **Patent Number** | : 7594623 | : RECALCULATION of PATENT |
| **Issue Date** | : 09/29/2009 | : TERM ADJUSTMENT IN VIEW |
| **Appliction No** | : 10/528,213 | : OF WYETH AND NOTICE OF INTENT TO |
| **Filed** | : 11/07/2005 | : ISSUE CERTIFICATE OF CORRECTION |
| | | : |

The Request for Recalculation is **GRANTED** to the extent indicated.

The patent term adjustment has been determined to be **808** days. The USPTO will *sua sponte* issue a certificate of correction reflecting the amount of PTA days determined by the recalculation.

Prior to the issuance of the certificate of correction, the USPTO will afford patentee an opportunity to be heard and request reconsideration. Accordingly, patentee has **one month or thirty (30) days**, whichever is longer, to file a request for reconsideration of this patent term adjustment calculation. See 35 U.S.C. 154(b)(3)(B)(ii) and 37 CFR 1.322(a)(4). No extensions of time will be granted under 37 CFR 1.136.

Patentee should use document code PET.OP if electronically filing a request for reconsideration of this patent term adjustment calculation. The patentee must also include the information required by 37 CFR 1.705(b)(2) and the fee required by 37 CFR 1.18(e). If patentee does not file a timely request for reconsideration of this patent term adjustment calculation including the information required by 37 CFR 1.705(b)(2) and the fee required by 37 CFR 1.18(e), the USPTO will issue a certificate of correction reflecting the PTA determination noted above.

Patentee should be aware that in order to preserve the right to review in the United States District Court for the District of Columbia of the USPTO patent term adjustment determination, patentee must ensure that he or she also take the steps required under 35 U.S.C. 154(b)(4)(A) in a timely manner. Nothing in the request for recalculation should be construed as providing an alternative time frame for commencing a civil action under 35 U.S.C. 154(b)(4)(A).

Any questions concerning this decision should be directed to the Office of Patent Legal Administration at 571-272-7702.

UNITED STATES PATENT AND TRADEMARK OFFICE

Commissioner for Patents
United States Patent and Trademark Office
P.O. Box 1450
Alexandria, VA 22313-1450
www.uspto.gov

**Haynes and Boone, LLP**
**901 Main Street, Suite 3100**
**Dallas, TX 75202**

COPY MAILED

MAY 3 1 2007

OFFICE OF PETITIONS

In re Application of
Lev Ring et al.
Application No. 10/528,219
Filed: November 8, 2005
Attorney Docket No. 25791.102.08

DECISION ON PETITION
TO WITHDRAW
FROM RECORD

This is a decision on the Request to Withdraw as attorney or agent of record under 37 C.F.R. § 1.36(b), filed April 18, 2007.

The request is **NOT APPROVED**.

A grantable request to withdraw as attorney/agent of record must be signed by every attorney/agent seeking to withdraw or contain a clear indication that one attorney is signing on behalf of another/others. A request to withdraw will not be approved unless at least 30 (thirty) days would remain between the date of approval and the later of the expiration date of a time to file a response or the expiration date of the maximum time period which can be extended under 37 C.F.R. § 1.136(a).

The request cannot be approved because no reasons for withdrawal have been provided. The Office cannot, at this time, determine whether practitioner's request is one of the mandatory or permissive reasons enumerated in 37 CFR 10.40. Any subsequent requests must include reasons for withdrawal. Please note that there is a space provided for on PTO/SB/83 (Request to Withdraw as Attorney or Agent) to supply practitioner's reasons.

A courtesy copy of this decision is being mailed to the first named signing inventor. A courtesy copy is being to the address noted in the request. If the attorneys with this firm desire to receive future communication concerning this application, proper power of attorney documents should be submitted.

There are no outstanding office actions at this time.

All future communications from the Office will continue to be directed to the above-listed address until otherwise notified by applicant.

Telephone inquiries concerning this decision should be directed to Kimberly Inabinet at 571-272- 4618.

Frances Hicks
Petitions Examiner
Office of Petitions

cc: Lev Ring
14126 Heatherhill Place
Houston, TX 77077

cc: King & Spalding, LLP
1100 Louisiana Street, Suite 4000
Houston, TX 77002

DATE 8/29/07

APPLICATION NUMBER 10/528221

DOC CODE PetDec

DOC DATE 8/30/07

DELIVER THE ATTACHED FIFLE/DOCUMENT TO THE TC SCANNING CENTER

CONTRACTOR: THE ATTACHED FILE/DOCUMENT MUST BE INDEXED AND SCANNED INTO IFW WITHIN **8** WORK HOURS; UPLOADING OF THE SCANNED IMAGES SHOULD OCCUR NO LATER THAN **16** WORK HOURS FOLLOWING RECEIPT OF THIS REQUEST

AFTER SCANNING, ORIGINAL DOCUMENTS SHOULD BE BOXED IN ACCORDANCE WITH INSTRUCTIONS

UNITED STATES PATENT AND TRADEMARK OFFICE

Commissioner for Patents
United States Patent and Trademark Office
P.O. Box 1450
Alexandria, VA 22313-1450
www.uspto.gov

COPY MAILED

AUG 30 2007

OFFICE OF PETITIONS

HAYNES AND BOONE, LLP
901 MAIN STREET
SUITE 3100
DALLAS TX 75202-3789

In re Application of

Brock Wayne Watson, et al.
Application No. 10/528,221
Filed: March 18, 2005
Attorney Docket No. 25791.1112.04

DECISION ON PETITION
TO WITHDRAW
FROM RECORD

This is a decision on the Request to Withdraw as attorney or agent of record under 37 C.F.R. § 1.36(b), filed April 18, 2007.

The request is **NOT APPROVED**.

A grantable request to withdraw as attorney/agent of record must be signed by every attorney/agent seeking to withdraw or contain a clear indication that one attorney is signing on behalf of another/others. A request to withdraw will not be approved unless at least 30 (thirty) days would remain between the date of approval and the later of the expiration date of a time to file a response or the expiration date of the maximum time period which can be extended under 37 C.F.R. § 1.136(a).

The request cannot be approved because no reasons for withdrawal have been provided. The Office cannot, at this time, determine whether practitioner's request is one of the mandatory or permissive reasons enumerated in 37 CFR 10.40. Any subsequent requests must include reasons for withdrawal. Please note that there is a space provided for on PTO/SB/83 (Request to Withdraw as Attorney or Agent) to supply practitioner's reasons.

All future communications from the Office will continue to be directed to the above-listed address until otherwise notified by applicant.

Telephone inquiries concerning this decision should be directed to undersigned at 571-272-1642.

April M. Wise
Petitions Examiner
Office of Petitions

cc: TODD MATTINGLY
KING & SPALDING, LLP
1100 LOUISIANA STREET
SUITE 4400
HOUSTON, TX 77002

UNITED STATES PATENT AND TRADEMARK OFFICE

Commissioner for Patents
United States Patent and Trademark Office
P.O. Box 1450
Alexandria, VA 22313-1450
www.uspto.gov

**Customer# 27683**
**HAYNES AND BOONE, LLP**
**901 MAIN STREET**
**SUITE 3100**
**DALLAS, TX 75202**

**COPY MAILED**

APR 1 4 2008

**OFFICE OF PETITIONS**

In re Application of

**COSTA,** Scott et al.
Application No. 10/528,222
Filed: March 18, 2005
Attorney Docket No. **25791.129.03**

DECISION ON PETITION
TO WITHDRAW
FROM RECORD

This is a decision on the Request to Withdraw as attorney or agent of record under 37 C.F.R. § 1.36(b), filed April 18, 2007.

The request is **NOT APPROVED**.

A grantable request to withdraw as attorney/agent of record must be signed by every attorney/agent seeking to withdraw or contain a clear indication that one attorney is signing on behalf of another/others. A request to withdraw will not be approved unless at least 30 (thirty) days would remain between the date of approval and the later of the expiration date of a time to file a response or the expiration date of the maximum time period which can be extended under 37 C.F.R. § 1.136(a).

The request cannot be approved because no reasons for withdrawal have been provided. The Office cannot, at this time, determine whether practitioner's request is one of the mandatory or permissive reasons enumerated in 37 CFR 10.40. Any subsequent requests must include reasons for withdrawal. Please note that there is a space provided for on PTO/SB/83 (Request to Withdraw as Attorney or Agent) to supply practitioner's reasons.

A review of the file record indicates that a change of correspondence address to customer No. 62519 was filed June 16, 2006.

All future communications from the Office will continue to be directed to the above-listed address until otherwise notified by applicant.

Telephone inquiries concerning this decision should be directed to the undersigned at 571-272- 4231.

Michelle R. Eason
Paralegal Specialist
Office of Petitions

cc: **KING & SPALDING, L.L.P.**
**TODD MATTINGLY**
**1100 LOUISIANA STREET**
**SUITE 4000**
**HOUSTON, TX 77002**

UNITED STATES PATENT AND TRADEMARK OFFICE

Commissioner for Patents
United States Patent and Trademark Office
P.O. Box 1450
Alexandria, VA 22313-1450
www.uspto.gov

COPY MAILED

AUG 27 2007

OFFICE OF PETITIONS

**Haynes and Boone, LLP**
**901 Main Street, Suite 3100**
**Dallas, TX 75202**

In re Application of

Scott Costa et al.
Application No. 10/528,223
Filed: August 4, 2005
Attorney Docket No. 25791.127.03

DECISION ON PETITION
TO WITHDRAW
FROM RECORD

This is a decision on the Request to Withdraw as attorney or agent of record under 37 C.F.R. § 1.36(b), filed April 18, 2007.

The request is **NOT APPROVED**.

A grantable request to withdraw as attorney/agent of record must be signed by every attorney/agent seeking to withdraw or contain a clear indication that one attorney is signing on behalf of another/others. A request to withdraw will not be approved unless at least 30 (thirty) days would remain between the date of approval and the later of the expiration date of a time to file a response or the expiration date of the maximum time period which can be extended under 37 C.F.R. § 1.136(a).

The request cannot be approved because no reasons for withdrawal have been provided. The Office cannot, at this time, determine whether practitioner's request is one of the mandatory or permissive reasons enumerated in 37 CFR 10.40. Any subsequent requests must include reasons for withdrawal. Please note that there is a space provided for on PTO/SB/83 (Request to Withdraw as Attorney or Agent) to supply practitioner's reasons.

Customer No. 27683 cannot be used to withdraw the attorneys of record. Customer number 62519 appointed them.

All future communications from the Office will continue to be directed to the above-listed address until otherwise notified by applicant.

Telephone inquiries concerning this decision should be directed to Terri Williams at 571-272- 2991.

T. Williams

Terri Williams
Petitions Examiner
Office of Petitions

cc: **King & Spalding, LLP**
**Todd Mattingly**
**1100 Louisiana Street**
**Suite 4000**
**Houston, TX 77002**

UNITED STATES PATENT AND TRADEMARK OFFICE

COMMISSIONER FOR PATENTS
UNITED STATES PATENT AND TRADEMARK OFFICE
P.O. BOX 1450
ALEXANDRIA, VA 22313-1450
www.uspto.gov

McCarter & Engish, LLP
265 Franklin Street
Boston MA 02110

MAILED
JUL 20 2009
OFFICE OF PETITIONS

In re Application of :
Carter et al. : ON APPLICATION FOR
Application No. 10/528,250 : PATENT TERM ADJUSTMENT
Filed: June 21, 2005 :
Attorney Docket No. NVV2-023USRCE :

This is in response to the APPLICATION FOR PATENT TERM ADJUSTMENT RECONSIDERATION UNDER 37 C.F.R. § 1.705(B) filed June 2, 2009. Applicants submit that the correct patent term adjustment to be indicated on the patent is three hundred seventy (370) days, not two hundred thirty-eight (238) days as calculated by the Office as of the mailing of the initial determination of patent term adjustment. Applicants request this correction solely on the basis that the Office will take in excess of three years to issue this patent.

As the instant application for patent term adjustment requests reconsideration of the patent term adjustment as it relates to the Office's failure to issue the patent within 3 years of the filing date, the application for patent term adjustment under 37 CFR 1.705(b) is **DISMISSED as PREMATURE**.

Knowledge of the actual date the patent issues is required to calculate the amount, if any, of additional patent term patentee is entitled to for Office failure to issue the patent within 3 years. See § 1.702(b). (This is true even where a request for continued examination (RCE) was filed). The computer will not undertake the § 1.702(b) calculation until the actual date of issuance of the patent has been determined. Likewise, the computer will not calculate any further Office delay under § 1.702(a)(4) or applicant delay under § 1.704(c)(10) until the actual date of issuance of the patent has been determined. As such, the Office cannot make a determination on the correctness of the patent term adjustment until the patent has issued.

Requesting reconsideration of the patent term adjustment to be indicated on the patent under 37 CFR 1.705(b) based on the initial determination of patent term adjustment and a projected issuance date of the patent (or even the filing date of the request for continued examination) is premature. Accordingly, it is appropriate to dismiss as premature such a request.

Rather than file an application for patent term adjustment under 37 CFR 1.705(b) contesting the 37 CFR 1.702(b) calculation at the time of the mailing of the notice of allowance, applicant is advised that they may wait until the time of the issuance of the patent and file a request for reconsideration of the patent term adjustment pursuant to 37 CFR 1.705(d). As the USPTO does not calculate the amount of time earned pursuant to 37 CFR 1.702(b) until the time of the issuance of the patent, the Office will consider any request for reconsideration of the patent term adjustment due to an error in the calculation of 37 CFR 1.702(b) to be timely if the request for reconsideration is filed within two months of the issuance of the patent. However, as to all other bases for contesting the initial determination of patent term adjustment received with the notice of allowance, applicant must timely file an application for patent term adjustment prior to the payment of the issue fee[1].

The Office acknowledges submission of the $200.00 fee set forth in 37 CFR 1.18(e) for consideration of the application for patent term adjustment under 37 CFR 1.705(b).

Any request for reconsideration of the patent term adjustment indicated on the patent must be timely filed within 2 months after issuance pursuant to 37 CFR 1.705(d) and must include payment of the required fee under 37 CFR 1.18(e).

---

[1] For example, if applicant disputes both the calculation of patent term adjustment under 37 CFR 1.702(a)(1) for Office failure to mail a first Office action or notice of allowance not later than fourteen months after the date on which the application was filed and under 37 CFR 1.702(b) for Office failure to issue a patent within three years of the actual filing date of the application, then applicant must still timely file an application for patent term adjustment prior to the payment of the issue fee to contest the calculation of Office delay in issuing a first Office action or notice of allowance. See 37 CFR 1.705(b) and 35 U.S.C. 154(b)(3)(B). A dispute as to the calculation of the §1.702(a)(1) period raised on request for reconsideration of patent term adjustment under 37 CFR 1.705(d) will be dismissed as untimely filed.

The Office of Data Management has been advised of this decision. This application is being referred to the Office of Data Management for issuance of the patent.

Telephone inquiries specific to this matter should be directed to Petitions Attorney Charlema Grant at (571) 272-3215.

Kery A Fries

Kery Fries
Senior Legal Advisor Attorney
Office of Patent Legal Administration

I hereby certify that this paper (along with any paper referred to as being attached or enclosed) is being transmitted via the office electronic filing system in accordance with § 1.6(a)(4). on the date shown below.

Dated: June 2, 2009
Electronic Signature for Elizabeth A. Hanley: /Elizabeth A. Hanley/

Docket No.: 117750-02301
(PATENT)

**IN THE UNITED STATES PATENT AND TRADEMARK OFFICE**

In re Patent Application of:
Malcolm Carter *et al.*

Application No.: 10/528,250

Confirmation No.: 2767

Filed: June 21, 2005

Art Unit: 1624

For: BENZODIAZEPINE DERIVATIVES AND PHARMACEUTICAL COMPOSITIONS CONTAINING THEM

Examiner: Bruck KIFLE

MS Patent Extension
Commissioner for Patents
P.O. Box 1450
Alexandria, VA 22313-1450

**APPLICATION FOR PATENT TERM ADJUSTMENT INCLUDING REQUEST FOR RECONSIDERATION UNDER 37 C.F.R. § 1.705(b)**

Dear Sirs:

1. This is an application for Patent Term Adjustment, pursuant to 35 USC § 154(b), to correct the Patent Term Adjustment indicated on the Notice of Allowance mailed on April 22, 2009. It is respectfully requested that Applicants be granted a minimum Patent Term Adjustment of 370 days.

2. The issue fee for the present patent application will be paid on June 2, 2009 which is no sooner than the filing date of this application for Patent Term Adjustment. Accordingly, the instant application for Patent Term Adjustment is timely filed pursuant to 37 C.F.R. §1.705(b). Applicants also submit herewith:

- the fee set forth in 37 C.F.R. § 1.18(e), and
- a "Statement Under 37 C.F.R. § 1 .705(b)(2)" which specifies

the correct Patent Term Adjustment and the bases under 37 C.F.R. § 1.702 for the adjustment; the relevant dates under 37 C.F.R. §§ 1.703(a)-(e) for which adjustment is sought; the adjustment specified in 37 C.F.R. § 1.703(f) to which the patent is entitled; and whether the patent is subject to a terminal disclaimer and any expiration date specified in the terminal disclaimer.

3. Applicants respectfully request grant of this Application for Patent Term Adjustment.

4. In accordance with 37 C.F.R. 1.705(b)(2)(i), Applicants submit herewith the fee set forth in 37 C.F.R. 1.18(e). It is Applicants' understanding that this $200.00 fee is required for this application for Patent Term Adjustment. However, should any additional fees be necessary, the Director is hereby authorized to charge any deficiency in the fees filed, asserted to be filed or which should have been filed herewith (or with any paper hereafter filed in this application by this firm) to our Deposit Account No. 50-4876, under Order No. 117750-02301..

Dated: June 2, 2009

Respectfully submitted,

By Elizabeth A. Hanley/

Elizabeth A. Hanley
Registration No.:33,505
McCarter & English, LLP
265 Franklin Street, 14th Floor
Boston, Massachusetts 02110
(617) 449-6500
Fax (617) 607-9200
Attorney/Agent For Applicants

UNITED STATES PATENT AND TRADEMARK OFFICE

Commissioner for Patents
United States Patent and Trademark Office
P.O. Box 1450
Alexandria, VA 22313-1450
www.uspto.gov

McCarter & English, LLP
Novartis Institutes for BioMedical Research, Inc.
265 Franklin Street
Boston MA 02110

MAILED
MAR 24 2010
OFFICE OF PETITIONS

| | |
|---|---|
| In re Patent No. 7,582,624 | : |
| Carter et al. | : DECISION ON REQUEST FOR |
| Issue Date: September 1, 2009 | : RECONSIDERATION OF |
| Application No. 10/528,250 | : PATENT TERM ADJUSTMENT |
| Filed: June 21, 2005 | : AND NOTICE OF INTENT |
| Attorney Docket No. NV2- | : TO ISSUE CERTIFICATE OF |
| 023USRCE | : CORRECTION |
| Title: Benzodiazepine | : |
| Derivatives and Pharmaceutical | : |
| Compositions Containing Them | : |

This is a decision on the petition filed on September 4, 2009, which is being treated as a petition under 37 CFR 1.705(d) requesting that the patent term adjustment indicated on the above-identified patent be corrected to indicate that the term of the above-identified patent is extended or adjusted by two hundred seventy-four (274) days.

The petition to correct the patent term adjustment indicated on the above-identified patent is **GRANTED to the extent indicated herein.**

The patent is entitled under 37 CFR 1.702(a) to 269 days.

Patentees calculated the "B" delay period based on the date the application papers were deposited in the Office March 17, 2005. However, in an international application, this period is based on the failure of the Office to issue a patent within three years after the national stage commenced under 35 U.S.C. 371(b) or (f). See 1.702(b).

The priority date of this application is September 20, 2002. As a request for early commencement was not made, and March 20, 2005 fell on a weekend, the national stage commenced in this application on March 21, 2005. Thus, the "B" delay is 243 days,

counting the number of days beginning on March 22, 2008 and ending on November 19, 2008, the day before the filing of the request for continued examination (RCE). See 1.703(b). As the period from the filing date of the RCE to the issue date of the patent is not included in the "B" delay period, the over three year period began on March 22, 2008 and ended on November 19, 2008, the day before the RCE was filed, and is 243 days. See 35 U.S.C. 154(b)(1)(B)(i). There are zero days of overlap between 37 CFR 1.702(a) and 37 CFR 1.702(b).

As such the total number of days the period of adjustment under 37 CFR 1.702(a) and (b) must be reduced due to applicants' delay which totals 31 days.

The adjustment is further properly reduced 114 days pursuant to 37 CFR 1.703(b)(4) in connection with the Notice of Appeal filed July 29, 2008. The reduction commenced July 29, 2008, the date that the Notice of Appeal was filed, and ended November 19, 2008, the day before the request for continued examination (RCE) was filed. See, 37 CFR 1.703(b)(4).

In view thereof, the patent is entitled to an overall adjustment of 367 days (269 days under 37 CFR 1.702(a) + 243 days under 37 CFR 1.702(b) - 0 overlapping days - 114 days under 37 CFR1.703 (b)(4) - 31 days of applicant delay).

The Office will *sua sponte* issue a certificate of correction. Pursuant to 37 CFR 1.322, the Office will not issue a certificate of correction without first providing assignee or patentee an opportunity to be heard. Accordingly, patentees are given **one (1) month or thirty (30) days**, whichever is longer, from the mail date of this decision to respond. No extensions of time will be granted under § 1.136. See 37 CFR 1.323(a)(4).

The Office acknowledges submission of the $200.00 fee set forth in 37 CFR 1.18(e). No additional fees are required.

The application is being forwarded to the Certificates of Branch for issuance of a certificate of correction. The Office will issue a certificate of correction indicating that the term of the above-identified patent is extended or adjusted by three hundred sixty-seven **(367)** days.

Telephone inquiries specific to this matter should be directed to Petitions Attorney Charlema Grant at (571) 272-3215.

*/ALESIA M. BROWN/*

Alesia M. Brown
Petitions Attorney
Office of Petitions

Enclosure: Copy of DRAFT Certificate of Correction

UNITED STATES PATENT AND TRADEMARK OFFICE

# CERTIFICATE OF CORRECTION

PATENT : 7,582,624 B2

DATED : **September 1, 2009** **DRAFT**

INVENTOR(S) : Carter et al.

It is certified that error appears in the above-identified patent and that said Letters Patent is hereby corrected as shown below:

On the cover page,

[*] Notice: Subject to any disclaimer, the term of this patent is extended or adjusted under 35 USC 154(b) by 238 days

Delete the phrase "by 238 days" and insert – by 367 days--

UNITED STATES PATENT AND TRADEMARK OFFICE

UNITED STATES DEPARTMENT OF COMMERCE
United States Patent and Trademark Office
Address: COMMISSIONER FOR PATENTS
P.O. Box 1450
Alexandria, Virginia 22313-1450
www.uspto.gov

McCarter & English, LLP
Novartis Institutes for BioMedical Research, Inc.
265 Franklin Street
Boston, MA 02110

Mail Date: 04/21/2010

| | | |
|---|---|---|
| **Applicant** | : Malcolm Carter | : DECISION ON REQUEST FOR |
| **Patent Number** | : 7582624 | : RECALCULATION of PATENT |
| **Issue Date** | : 09/01/2009 | : TERM ADJUSTMENT IN VIEW |
| **Appliction No** | : 10/528,250 | : OF WYETH AND NOTICE OF INTENT TO |
| **Filed** | : 06/21/2005 | : ISSUE CERTIFICATE OF CORRECTION |
| | | : |

The Request for Recalculation is **GRANTED** to the extent indicated.

The patent term adjustment has been determined to be **496** days. The USPTO will *sua sponte* issue a certificate of correction reflecting the amount of PTA days determined by the recalculation.

Prior to the issuance of the certificate of correction, the USPTO will afford patentee an opportunity to be heard and request reconsideration. Accordingly, patentee has **one month or thirty (30) days**, whichever is longer, to file a request for reconsideration of this patent term adjustment calculation. See 35 U.S.C. 154(b)(3)(B)(ii) and 37 CFR 1.322(a)(4). No extensions of time will be granted under 37 CFR 1.136.

Patentee should use document code PET.OP if electronically filing a request for reconsideration of this patent term adjustment calculation. The patentee must also include the information required by 37 CFR 1.705(b)(2) and the fee required by 37 CFR 1.18(e). If patentee does not file a timely request for reconsideration of this patent term adjustment calculation including the information required by 37 CFR 1.705(b)(2) and the fee required by 37 CFR 1.18(e), the USPTO will issue a certificate of correction reflecting the PTA determination noted above.

Patentee should be aware that in order to preserve the right to review in the United States District Court for the District of Columbia of the USPTO patent term adjustment determination, patentee must ensure that he or she also take the steps required under 35 U.S.C. 154(b)(4)(A) in a timely manner. Nothing in the request for recalculation should be construed as providing an alternative time frame for commencing a civil action under 35 U.S.C. 154(b)(4)(A).

Any questions concerning this decision should be directed to the Office of Patent Legal Administration at 571-272-7702.

UNITED STATES PATENT AND TRADEMARK OFFICE

Commissioner for Patents
United States Patent and Trademark Office
P.O. Box 1450
Alexandria, VA 22313-1450
www.uspto.gov

NXP, B.V.
NXP INTELLECTUAL PROPERTY DEPARTMENT
M/S41-SJ
1109 MCKAY DRIVE
SAN JOSE, CA 95131

COPY MAILED

NOV 19 2007

OFFICE OF PETITIONS

| | | |
|---|---|---|
| In re Application of | : | |
| Josep Rius Vazquez et al | : | |
| Application No. 10/528,253 | : | ON PETITION |
| Filed: March 17, 2005 | : | |
| Attorney Docket No. NL02 0875 US | : | |

This is a decision on the petition under 37 CFR 1.137(b), filed August 3, 2007, to revive the above-identified application.

The petition is **GRANTED**.

The above-identified application became abandoned for failure to reply in a timely manner to the non-final Office action mailed December 11, 2006, which set a shortened statutory period for reply of three (3) months. No extension of time under the provisions of 37 CFR 1.136(a) were obtained. Accordingly, the above-identified application became abandoned on March 12, 2007.

Telephone inquiries concerning this decision should be directed to Irvin Dingle at (571) 272-3210.

This matter is being referred to Technology Center AU 2829 for further processing.

Irvin Dingle
Petitions Examiner
Office of Petitions

08 AUG 2005

#4

UNITED STATES PATENT AND TRADEMARK OFFICE

COMMISSIONER FOR PATENTS
UNITED STATES PATENT AND TRADEMARK OFFICE
P.O. BOX 1450
ALEXANDRIA, VA 22313-1450
www.uspto.gov

Franco A. Serafini
Serafini Associates
7660 Fay Avenue, Suite H378
La Jolla, CA 92037

| | |
|---|---|
| In re Application of<br>RIBI<br>Application No.: 10/528,297<br>PCT No.: PCT/EP03/50285<br>Int. Filing Date: 03 July 2003<br>Priority Date: 08 July 2002<br>Atty. Docket No.: KAR 008<br>For: COMPOSITE CAPSULE FOR SEALING BOTTLES AND SIMILAR CONTAINERS, VARIOUS PROCESSES FOR MAKING SAID COMPOSITE CAPSULES AND APPARATUSES | DECISION ON PETITION<br><br>UNDER 37 CFR 1.137(b) |

The petition to revive under 37 CFR 1.137(b) filed 16 March 2005 in the above-captioned application is hereby **GRANTED** as follows:

Applicant's statement that "the entire delay in filing the required reply from the due date for the required reply until the filing of a grantable petition under 37 CFR 1.137(b) was unintentional" and the prompt filing of the petition satisfies the requirement of 37 CFR 1.137(b)(3).

A review of the application file reveals that applicant has now provided payment of the full, U.S. Basic National Fee. Therefore, the request to revive the application abandoned under 35 U.S.C. 371(d) is granted as to the National stage in the United States of America. Further, a review of the application file reveals that all of the requirements of 35 U.S.C. 371 for entry into the national stage in the United States have been satisfied.

The application has an international filing date of 03 July 2003 under 35 U.S.C. 363 and will be given a date of **16 March 2005** under 35 U.S.C. 371(c)(1), (c)(2) and (c)(4).

This application is being returned to the United States Designated/Elected Office (DO/EO/US) for treatment in accordance with this decision.

Derek A. Putonen
Attorney Advisor
Office of PCT Legal Administration
Tel: (571) 272-3294
Fax: (571) 273-0459

21 MAR 2006

#5

UNITED STATES PATENT AND TRADEMARK OFFICE

Commissioner for Patents
United States Patent and Trademark Office
P.O. Box 1450
Alexandria, VA 22313-1450
www.uspto.gov

Bradley N. Rubin
463 First Street, Ste. 5A
Hoboken, NJ 07030

In re Application of :
OH *et al* :
U.S. Application No.: 10/528,305 :
PCT No.: PCT/JP03/11970 :
Int. Filing Date: 19 September 2003 :
Priority Date: 19 September 2002 : **DECISION**
Docket No.: 114GI-157 :
For: METHOD OF MANUFACTURING A BOND MAGNET AND METHOD OF MANUFACTURING A MAGNETIC DEVICE INCLUDING A BOND MAGNET :

This decision is in response to the papers filed via facsimile on 16 February 2006 which are treated as a petition under 37 CFR 1.8(b). No fee is required.

## BACKGROUND

On 18 July 2005, the United States Designated/Elected Office (DO/EO/US) mailed a Notification of Missing Requirements under 35 U.S.C. 371 (Form PCT/DO/EO/905) indicating that a declaration in compliance with 37 CFR 1.497(a) and (b) and a $130.00 surcharge fee must be provided. A two-month time period for response was set with extensions of time available pursuant to 37 CFR 1.136(a).

On 20 July 2005, applicants purportedly filed via facsimile a reply to the Form PCT/DO/EO/905 which was accompanied by, *inter alia*, an executed declaration and authorization to charge the required fees to Deposit Account No. 50-2144.

On 16 February 2006, applicants filed the subject petition which was accompanied by, *inter alia*, copies of the documents purportedly filed via facsimile on 20 July 2005 and a copy of the facsimile transmission "Message Confirmation."

## DISCUSSION

Applicants claim that a response to the Form PCT/DO/EO/905 mailed 18 July 2005 was filed via facsimile on 20 July 2005. This response included an executed declaration and authorization to charge the required surcharge fee. However, these papers were not located in the file. Moreover, USPTO financial records for the above-captioned application show that the surcharge fee has not been charged.

37 CFR 1.8 *Certificate of mailing or transmission*, states in part:

(b) In the event that correspondence is considered timely filed by being mailed or transmitted in accordance with paragraph (a) of this section, but not received in the Patent and Trademark Office, and the application is held to be abandoned or the proceeding is dismissed, terminated, or decided with prejudice, the correspondence will be considered timely if the party who forwarded such correspondence:

(1) Informs the Office of the previous mailing or transmission of the correspondence promptly after becoming aware that the Office has no evidence of receipt of the correspondence;

(2) Supplies an additional copy of the previously mailed or transmitted correspondence and certificate; and

(3) Includes a statement which attests on a personal knowledge basis or to the satisfaction of the Director to the previous timely mailing or transmission. If the correspondence was sent by facsimile transmission, a copy of the sending unit 's report confirming transmission may be used to support this statement.

In the subject petition, applicants have provided a copy of the documents purportedly filed 20 July 2005. Applicants also included a copy of the facsimile transmission "Message Confirmation" received on their facsimile machine as proof of responding to the Form PCT/DO/EO/905. Counsel also states that "[i]n accordance with §1.8(b)(3), the undersigned is the person who sent the facsimile transmission of the Response."

This evidence meets the requirements of 37 CFR 1.8(b) and is sufficient for a grantable petition.

## CONCLUSION

Applicants' petition under 37 CFR 1.8(b) is **GRANTED**.

The declaration originally filed 20 July 2005 is in compliance with 37 CFR 1.497(a) and (b). No extension fee is required. The surcharge fee of $130.00 has been charged to Deposit Account 50-2144 as authorized in the 20 July 2005 response.

Applicants have completed the requirements for acceptance under 35 U.S.C.

371(c). The application has an international filing date of 19 September 2003, under 35 U.S.C. 363 and a 35 U.S.C. 371(c)(1), (c)(2) and (c)(4) date of 20 July 2005.

This application is being forwarded to the National Stage Processing Division of the Office of PCT Operations for continued processing.

James Thomson

James Thomson
Attorney Advisor
Office of PCT Legal Administration

Tel.: (571) 272-3302

UNITED STATES PATENT AND TRADEMARK OFFICE

UNITED STATES DEPARTMENT OF COMMERCE
United States Patent and Trademark Office
Address: COMMISSIONER FOR PATENTS
P.O. Box 1450
Alexandria, Virginia 22313-1450
www.uspto.gov

FISH & RICHARDSON P.C.
P.O BOX 1022
MINNEAPOLIS, MN 55440-1022

Mail Date: 04/20/2010

| | | |
|---|---|---|
| **Applicant** | : Roger Victor Bonnert | : DECISION ON REQUEST FOR |
| **Patent Number** | : 7585867 | : RECALCULATION of PATENT |
| **Issue Date** | : 09/08/2009 | : TERM ADJUSTMENT IN VIEW |
| **Appliction No** | : 10/528,316 | : OF WYETH AND NOTICE OF INTENT TO |
| **Filed** | : 12/01/2005 | : ISSUE CERTIFICATE OF CORRECTION |
| | | : |

The Request for Recalculation is **GRANTED** to the extent indicated.

The patent term adjustment has been determined to be **0** days. The USPTO will *sua sponte* issue a certificate of correction reflecting the amount of PTA days determined by the recalculation.

Prior to the issuance of the certificate of correction, the USPTO will afford patentee an opportunity to be heard and request reconsideration. Accordingly, patentee has **one month or thirty (30) days**, whichever is longer, to file a request for reconsideration of this patent term adjustment calculation. See 35 U.S.C. 154(b)(3)(B)(ii) and 37 CFR 1.322(a)(4). No extensions of time will be granted under 37 CFR 1.136.

Patentee should use document code PET.OP if electronically filing a request for reconsideration of this patent term adjustment calculation. The patentee must also include the information required by 37 CFR 1.705(b)(2) and the fee required by 37 CFR 1.18(e). If patentee does not file a timely request for reconsideration of this patent term adjustment calculation including the information required by 37 CFR 1.705(b)(2) and the fee required by 37 CFR 1.18(e), the USPTO will issue a certificate of correction reflecting the PTA determination noted above.

Patentee should be aware that in order to preserve the right to review in the United States District Court for the District of Columbia of the USPTO patent term adjustment determination, patentee must ensure that he or she also take the steps required under 35 U.S.C. 154(b)(4)(A) in a timely manner. Nothing in the request for recalculation should be construed as providing an alternative time frame for commencing a civil action under 35 U.S.C. 154(b)(4)(A).

Any questions concerning this decision should be directed to the Office of Patent Legal Administration at 571-272-7702.

02 NOV 2005

#3

UNITED STATES PATENT AND TRADEMARK OFFICE

Commissioner for Patents
United States Patent and Trademark Office
P.O. Box 1450
Alexandria, VA 22313-1450
www.uspto.gov

Novozymes North America Inc
500 Fifth Avenue
Suite 1600
New York NY 10110

| | | |
|---|---|---|
| In re Application of | : | |
| BORCH, Kim et al. | : | |
| Application No.: 10/528,330 | : | |
| PCT No.: PCT/DK03/00460 | : | DECISION |
| Int. Filing Date: 02 July 2003 | : | |
| Priority Date: 03 July 2002 | : | ON PETITION UNDER |
| Docket No.: 10312.204-US | : | |
| For: TREATMENT OF DOUGH WITH A LIPOXYGENASE AND A LIPOLYTIC ENZYME | : | 37 CFR 1.137(b) |

Applicants' "Petition For Revival of an International Application For Patent Designating the United States Abandoned Unintentionally Under 37 CFR 1.137(b)," filed in the above-captioned application on 15 March 2005 is **GRANTED**.

Applicants state that "the entire delay in filing the required reply from the due date for the required reply until the filing of a grantable petition under 37 CFR 1.137(b) was unintentional," as required by 37 CFR 1.137(b)(3). The appropriate national fee and petition fee have been submitted. A terminal disclaimer is not required as the application was filed on or after 08 June 1995. Accordingly, all requirements under 37 CFR 1.137(b) have been satisfied.

A signed oath or declaration has not yet been submitted.

This application is being forwarded to the National Stage Processing Branch of the Office of PCT Operations for continued processing in accordance with this decision, including the mailing of a Notification of Missing Requirements (Form PCT/DO/EO/905) indicating that an oath or declaration in compliance with 37 CFR 1.497(a)-(b) and the surcharge for late filing of the search fee, examination fee or the oath or declaration are required.

Erin P. Thomson

Erin P. Thomson
Attorney Advisor
PCT Legal Administration

Telephone: 571-272-3292
Facsimile: 571-273-0459

UNITED STATES PATENT AND TRADEMARK OFFICE

UNITED STATES DEPARTMENT OF COMMERCE
United States Patent and Trademark Office
Address: COMMISSIONER FOR PATENTS
P.O. Box 1450
Alexandria, Virginia 22313-1450
www.uspto.gov

FISH & RICHARDSON, PC
P.O. BOX 1022
MINNEAPOLIS, MN 55440-1022

Mail Date: 04/20/2010

| | | |
|---|---|---|
| **Applicant** | : Gregory C. Roberts | : DECISION ON REQUEST FOR |
| **Patent Number** | : 7656510 | : RECALCULATION of PATENT |
| **Issue Date** | : 02/02/2010 | : TERM ADJUSTMENT IN VIEW |
| **Appliction No** | : 10/528,348 | : OF WYETH AND NOTICE OF INTENT TO |
| **Filed** | : 11/07/2005 | : ISSUE CERTIFICATE OF CORRECTION |
| | | : |

The Request for Recalculation is **GRANTED** to the extent indicated.

The patent term adjustment has been determined to be **437** days. The USPTO will *sua sponte* issue a certificate of correction reflecting the amount of PTA days determined by the recalculation.

Prior to the issuance of the certificate of correction, the USPTO will afford patentee an opportunity to be heard and request reconsideration. Accordingly, patentee has **one month or thirty (30) days**, whichever is longer, to file a request for reconsideration of this patent term adjustment calculation. See 35 U.S.C. 154(b)(3)(B)(ii) and 37 CFR 1.322(a)(4). No extensions of time will be granted under 37 CFR 1.136.

Patentee should use document code PET.OP if electronically filing a request for reconsideration of this patent term adjustment calculation. The patentee must also include the information required by 37 CFR 1.705(b)(2) and the fee required by 37 CFR 1.18(e). If patentee does not file a timely request for reconsideration of this patent term adjustment calculation including the information required by 37 CFR 1.705(b)(2) and the fee required by 37 CFR 1.18(e), the USPTO will issue a certificate of correction reflecting the PTA determination noted above.

Patentee should be aware that in order to preserve the right to review in the United States District Court for the District of Columbia of the USPTO patent term adjustment determination, patentee must ensure that he or she also take the steps required under 35 U.S.C. 154(b)(4)(A) in a timely manner. Nothing in the request for recalculation should be construed as providing an alternative time frame for commencing a civil action under 35 U.S.C. 154(b)(4)(A).

Any questions concerning this decision should be directed to the Office of Patent Legal Administration at 571-272-7702.

07 APR 2006

UNITED STATES PATENT AND TRADEMARK OFFICE

Commissioner for Patents
United States Patent and Trademark Office
P.O. Box 1450
Alexandria, VA 22313-1450
www.uspto.gov

Emery L. Tracy
P O Box 1518
Boulder, CO 80306

| | | |
|---|---|---|
| In re Application of | : | |
| AGARWAL, Pradeep K. | : | |
| Application No.: 10/528,370 | : | DECISION ON |
| PCT No.: PCT/US03/29419 | : | |
| Int. Filing Date: 17 September 2003 | : | REQUEST |
| Priority Date: 18 September 2002 | : | |
| Attorney's Docket No.: W002.PAT-22 | : | UNDER 37 CFR 1.42 |
| For: SYSTEM AND METHOD ... RECOVERY | : | |
| OF HYDROGEN | : | |

This application is before the Office of PCT Legal Administration for matters arising under 35 USC 371. A review of the submission reveals an indication that inventor Agarwal is deceased. Applicants' submission has been treated as a request for status under 37 CFR 1.42.

## BACKGROUND

On 17 September 2003, applicants filed international application PCT/US03/29419, which claimed a priority date of 18 September 2002. The deadline for entry into the national stage in the United States was 18 March 2005.

On 18 March 2005, applicants filed a submission for entry into the national stage in the United States which was accompanied by, *inter alia*, the U.S. Basic National Fee.

On 03 November 2005, applicants submitted a declaration, that has been treated as a request under 37 CFR 1.42.

## DISCUSSION

Under 37 CFR 1.41(a)(4), the inventorship of the international application entering the national stage under 35 U.S.C. 371 is that inventorship set forth in the international application, which includes any change effected under PCT Rule 92*bis*. The Office does not have a record of such a change. The international application lists 7 inventors. However, the declaration lists only 6 inventors. Mr. Steven Fischer is not listed. As such, the declaration does not comply with 37 CFR 1.497(a)-(b).

Under 35 U.S.C. §117, legal representatives of deceased inventors may make application for patent upon compliance with the requirements and on the same terms and conditions applicable to the inventor. The "legal representative (executor, administrator, etc.) of the deceased inventor may make the necessary oath or declaration, and apply for and obtain the patent." 37 CFR 1.42.

The declaration is executed by someone for deceased inventor Agarwal. The declaration does not state that the person executing the declaration for the deceased inventor is the deceased inventor's legal representative. The declaration must list the inventors and their citizenships and the legal representative

and the legal representative's citizenship, residence and postal address. See 37 CFR 1.497. As indicated, the declaration does not comply with 37 CFR 1.497(a)-(b) and 37 CFR 1.42.

Additionally, the fourth named inventor on the international application is listed as "Jerry Hamman". On the declaration, he indicates that his name is "Hamann". If this is a typographical or transliteration error, it can be corrected by a statement from the applicant indicating which is the correct name. See MPEP 201.03.

## CONCLUSION

For the above reasons, the request for status under 37 CFR 1.42 is **REFUSED**.

Applicant is required to submit a declaration in compliance with 37 CFR 1.497(a)-(b) and 1.42 within a time period of **TWO (2) MONTHS** from the mail date of this Decision. THIS PERIOD FOR RESPONSE MAY BE EXTENDED UNDER 37 CFR 1.136(a). FAILURE TO PROPERLY RESPOND WILL RESULT IN ABANDONMENT. Any request for reconsideration of this decision should include a cover letter entitled "Renewed Submission Under 37 CFR 1.42."

Any further correspondence with respect to this matter should be addressed to the Mail Stop PCT, Commissioner for Patents, Office of PCT Legal Administration, P.O. Box 1450, Alexandria, Virginia 22313-1450, with the contents of the letter marked to the attention of the Office of PCT Legal Administration.

Erin P. Thomson

Erin P. Thomson
Attorney Advisor
PCT Legal Administration

Telephone: 571-272-3292
Facsimile: 571-273-0459

UNITED STATES PATENT AND TRADEMARK OFFICE

Commissioner for Patents
United States Patent and Trademark Office
P.O. Box 1450
Alexandria, VA 22313-1450
www.uspto.gov

12 SEP 2006

Emery L. Tracy
P O Box 1518
Boulder, CO 80306

| | | |
|---|---|---|
| In re Application of | : | |
| AGARWAL, Pradeep K. | : | |
| Application No.: 10/528,370 | : | DECISION ON |
| PCT No.: PCT/US03/29419 | : | |
| Int. Filing Date: 17 September 2003 | : | REQUEST |
| Priority Date: 18 September 2002 | : | |
| Attorney's Docket No.: W002.PAT-22 | : | UNDER 37 CFR 1.42 |
| For: SYSTEM AND METHOD ... RECOVERY | : | |
| OF HYDROGEN | : | |

This application is before the Office of PCT Legal Administration for matters arising under 35 USC 371. A review of the submission reveals an indication that inventor Agarwal is deceased. Applicants' submission has been treated as a request for status under 37 CFR 1.42.

## BACKGROUND

On 17 September 2003, applicants filed international application PCT/US03/29419, which claimed a priority date of 18 September 2002. The deadline for entry into the national stage in the United States was 18 March 2005.

On 18 March 2005, applicants filed a submission for entry into the national stage in the United States which was accompanied by, *inter alia*, the U.S. Basic National Fee.

On 03 November 2005, applicants submitted a declaration, that has been treated as a request under 37 CFR 1.42.

On 07 April 2006, the Office mailed Decision On Request under 37 CFR 1.42, dismissing applicants' refusing applicants' request.

On 29 June 2006, applicants filed the instant renewed request along with the fee for a one month extension of time.

## DISCUSSION

Under 35 U.S.C. §117, legal representatives of deceased inventors may make application for patent upon compliance with the requirements and on the same terms and conditions applicable to the inventor. The "legal representative (executor, administrator, etc.) of the deceased inventor may make the necessary oath or declaration, and apply for and obtain the patent." 37 CFR 1.42.

The declaration must list the inventors and their citizenships and the legal representative and the legal representative's citizenship, residence and postal address. The 29 June 2006 declaration complies with 37 CFR 1.497(a)-(b) and 37 CFR 1.42.

Additionally, applicants have indicated that the correct spelling of the fourth named inventor's name is "Jerry Hamann". This is construed as a statement that the original spelling of the fourth inventor's name as "Jerry Hamman" was a typographical error. If this is not a correct interpretation, applicant must notify the Office immediately.

**CONCLUSION**

For the above reasons, the request for status under 37 CFR 1.42 is **GRANTED**.

The correction of the fourth inventor's name to "Jerry Hamann" is **GRANTED**.

This application is being forwarded to the National Stage Processing Branch of the Office of PCT Operations for further processing consistent with this decision. The application has a 35 U.S.C. 371(c)(1), (c)(2) and (c)(4) date of 29 June 2006.

Erin P. Thomson

Erin P. Thomson
Attorney Advisor
PCT Legal Administration

Telephone: 571-272-3292
Facsimile: 571-273-0459

19 JUN 2006

UNITED STATES PATENT AND TRADEMARK OFFICE

Commissioner for Patents
United States Patent and Trademark Office
P.O. Box 1450
Alexandria, VA 22313-1450
www.uspto.gov

James S. Keddie, Ph.D.
Bozicevic, Field & Francis, LLP
1900 University Avenue, Suite 200
East Palo Alto, CA 94303

| | | |
|---|---|---|
| In re Application of | : | |
| GLENN, et al. | : | |
| Application No.: 10/528,377 | : | DECISION ON PETITION |
| PCT No.: PCT/US04/27070 | : | |
| Int. Filing Date: 18 August 2004 | : | UNDER 37 CFR 1.181 |
| Priority Date: 22 August 2003 | : | |
| Atty. Docket No.: STAN-316 | : | |
| For: METHODS AND COMPOSITIONS FOR | : | |
| IDENTIFYING ANTI-HCV AGENTS | : | |

This decision is in response to applicants' "Request for Corrected Notice of Acceptance of Application Under 35 U.S.C. 371" filed 12 June 2006 in the United States Patent and Trademark Office (USPTO).

## BACKGROUND

On 18 August 2004, applicant filed international application PCT/US04/27070 which claimed a priority date of 22 August 2003. Pursuant to 37 CFR 1.495, the deadline for payment of the basic national fee in the United States was to expire 30 months from the priority date, 22 February 2006.

On 16 March 2005, applicant filed a Transmittal Letter (PTO-1390) requesting entry into the national stage in the United States of America under 35 U.S.C. 371. Filed with the Transmittal Letter were, *among others*, the requisite basic national fee; a copy of the international application; an application data sheet and a biochemical sequence diskette. Applicant did not mark Box 3 on the transmittal letter (PTO-1390) which states "[t]his is an express request to begin national examination procedures (35 U.S.C. 371(f)) at any time rather than delay examination until the expiration of the applicable time limit set in 35 U.S.C. 371(b) and PCT Article 22 and 39(1)."

On 05 December 2005, applicant was mailed a "Notification of Missing Requirements" (Form PCT/DO/EO/905) indicating that an executed oath or declaration of the inventors was required, as well as, payment of the $65.00 surcharge for providing an executed oath or declaration later than thirty months from the earliest claimed priority date. Applicant was afforded two months to file a proper response.

On 04 January 2006, applicant responded with an executed declaration of the inventors.

On 02 June 2006, the United States Designated/Elected Office (DO/EO/US) mailed a "Notification of Acceptance of Application under 35 U.S.C. 371 AND 37 CFR 1.495" (Form PCT/DO/EO/903) which set forth the date of receipt 35 U.S.C. 371(c)(1), (c)(2), and (c)(4) requirements as 04 January 2006 and a

35 U.S.C. 371 completion date of 22 February 2006.

On 12 June 2006, applicant filed "Request for Corrected Notice of Acceptance of Application Under 35 U.S.C. 371."

## DISCUSSION

Applicants request that the date of completion of requirements on the Notification of Acceptance of Application under 35 U.S.C. 371 AND 37 CFR 1.495 should be corrected to 04 January 2006. The Notification of Acceptance of Application under 35 U.S.C. 371 AND 37 CFR 1.495" (Form PCT/DO/EO/903) indicates the date of receipt of the 37 U.S.C. 371 (c)(1), (c)(2), and (c)(4) requirements and it also indicates the date of completion of all 35 U.S.C. 371 requirements. MPEP §1893.03(b) states that the date of completion of all 35 U.S.C. 371 requirements will be later than the date of receipt of the 37 U.S.C. 371 (c)(1), (c)(2), and (c)(4) when a request for early processing has not been requested prior to 30 months from the priority date. Here, applicants submitted the last of the requirements set forth in 35 U.S.C. 371(c)(1), (c)(2), and (c)(4), the executed declaration, on 04 January 2006 . However, applicant did not check Box 3 on the transmittal letter (PTO-1390) which states "[t]his is an express request to begin national examination procedures (35 U.S.C. 371(f)) at any time rather than delay examination until the expiration of the applicable time limit set in 35 U.S.C. 371(b) and PCT Article 22 and 39(1)" and therefore, national stage processing or the date of completion of all 35 U.S.C. 371 requirements could not begin prior to 30 months from the priority date, 22 February 2006. Therefore, the correction of the Notification of Acceptance to indicate a date of 04 January 2006 is not proper since the requirements set forth in 35 U.S.C. 371 were completed on 22 February 2006.

## CONCLUSION

Applicants' request for the issuance of a corrected Notification of Acceptance of Application under 35 U.S.C. 371 and 37 CFR 1.495 is **REFUSED**.

Any further correspondence with respect to this matter should be addressed to: Mail Stop PCT, Commissioner for Patents, Office of PCT Legal Administration, P.O. Box 1450, Alexandria, Virginia 22313-1450, with the contents of the letter marked to the attention of the Office of PCT Legal Administration.

Derek A. Putonen
Attorney Advisor
Office of PCT Legal Administration
Tel: 571-272-3294
Fax: 571-273-0459

UNITED STATES PATENT AND TRADEMARK OFFICE

UNITED STATES DEPARTMENT OF COMMERCE
United States Patent and Trademark Office
Address: COMMISSIONER FOR PATENTS
P.O. Box 1450
Alexandria, Virginia 22313-1450
www.uspto.gov

Stanford University Office of Technology Licensing
Bozicevic, Field & Francis LLP
1900 University Avenue
Suite 200
East Palo Alto, CA 94303

Mail Date: 04/21/2010

| | | |
|---|---|---|
| **Applicant** | : Jeffrey S. Glenn | : DECISION ON REQUEST FOR |
| **Patent Number** | : 7582428 | : RECALCULATION of PATENT |
| **Issue Date** | : 09/01/2009 | : TERM ADJUSTMENT IN VIEW |
| **Appliction No** | : 10/528,377 | : OF WYETH AND NOTICE OF INTENT TO |
| **Filed** | : 01/04/2006 | : ISSUE CERTIFICATE OF CORRECTION |
| | | : |

The Request for Recalculation is **GRANTED** to the extent indicated.

The patent term adjustment has been determined to be **0** days. The USPTO will *sua sponte* issue a certificate of correction reflecting the amount of PTA days determined by the recalculation.

Prior to the issuance of the certificate of correction, the USPTO will afford patentee an opportunity to be heard and request reconsideration. Accordingly, patentee has **one month or thirty (30) days**, whichever is longer, to file a request for reconsideration of this patent term adjustment calculation. See 35 U.S.C. 154(b)(3)(B)(ii) and 37 CFR 1.322(a)(4). No extensions of time will be granted under 37 CFR 1.136.

Patentee should use document code PET.OP if electronically filing a request for reconsideration of this patent term adjustment calculation. The patentee must also include the information required by 37 CFR 1.705(b)(2) and the fee required by 37 CFR 1.18(e). If patentee does not file a timely request for reconsideration of this patent term adjustment calculation including the information required by 37 CFR 1.705(b)(2) and the fee required by 37 CFR 1.18(e), the USPTO will issue a certificate of correction reflecting the PTA determination noted above.

Patentee should be aware that in order to preserve the right to review in the United States District Court for the District of Columbia of the USPTO patent term adjustment determination, patentee must ensure that he or she also take the steps required under 35 U.S.C. 154(b)(4)(A) in a timely manner. Nothing in the request for recalculation should be construed as providing an alternative time frame for commencing a civil action under 35 U.S.C. 154(b)(4)(A).

Any questions concerning this decision should be directed to the Office of Patent Legal Administration at 571-272-7702.

13 SEP 200

UNITED STATES PA T AND TRADEMARK OFFICE

COMMISSIONER FOR PATENTS
UNITED STATES PATENT AND TRADEMARK OFFICE
P.O. BOX 1450
ALEXANDRIA, VA 22313-1450
www.uspto.gov

The Firm of Karl F. Ross P.C.
5676 Riverdale Ave., Box 900
Riverdale, NY 10471

| | | |
|---|---|---|
| In re Application of CAVALLINI et al | : | |
| U.S. Application No.: 10/528,378 | : | |
| PCT Application No.: PCT/EP03/10242 | : | |
| Int. Filing Date: 15 September 2003 | : | DECISION |
| Priority Date Claimed: 16 September 2002 | : | |
| Attorney Docket No.: 23251 | : | |
| For: METHOD FOR MANUFACTURING AND | : | |
| CONTROLLING STRUCTURES . . . | : | |

This is in response to the "Petition Under 37 CFR 1.182" filed 29 August 2005.

## BACKGROUND

On 15 September 2003, applicant filed international application PCT/EP03/10242, which claimed priority of an earlier Italy application filed 16 September 2002. A copy of the international application was communicated to the USPTO from the International Bureau on 25 March 2004. The thirty-month period for paying the basic national fee in the United States expired on 16 March 2005.

On 16 March 2005, applicant filed purported national stage papers in the United States Designated/Elected Office (DO/EO/US). The submission, which was filed by The Firm of Karl F. Ross P.C., indicated "23251" as the attorney docket number and was assigned U.S. Application Number 10/528,378.

On 23 March 2005, applicant filed purported national stage papers in the DO/EO/US. The submission, which was filed by Modiano & Associati, indicated "39907/GM/Ip" as the attorney docket number and was assigned U.S. Application Number 10/528,775.

On 28 June 2005, this Office mailed a communication which indicated that the submission of two separate sets of national stage papers for the same international application was improper.

On 29 August 2005, applicant filed the present petition under 37 CFR 1.182.

## DISCUSSION

The petition states that applicant elects to proceed with the prosecution of the national stage papers filed 16 March 2005. Applicant's explanation for the error is accepted. The papers contained in the file wrapper for U.S. application number 10/528,775 will be merged into the present application.

## CONCLUSION

The petition under 37 CFR 1.182 is GRANTED.

The serialization of U.S. application number 10/528,775 is hereby VACATED.

The application has an International Filing Date under 35 U.S.C. 363 of 15 September 2003, and a date under 35 U.S.C. 371(c)(1), (c)(2), and (c)(4) of 29 August 2005.

This application is being forwarded to the United States Designated/Elected Office (DO/EO/US) for further processing in accordance with this decision.

Bryan Tung
PCT Legal Examiner
PCT Legal Office

Telephone: 571-272-3303
Facsimile: 571-273-0459

28 JUN 2005

UNITED STATES PATENT AND TRADEMARK OFFICE

COMMISSIONER FOR PATENTS
UNITED STATES PATENT AND TRADEMARK OFFICE
P.O. BOX 1450
ALEXANDRIA, VA 22313-1450
www.uspto.gov

The Firm of Karl F. Ross P.C.
5676 Riverdale Ave., Box 900
Riverdale, NY 10471

| | | |
|---|---|---|
| In re Application of CAVALLINI et al | : | |
| U.S. Application No.: 10/528,378 | : | |
| PCT Application No.: PCT/EP03/10242 | : | |
| Int. Filing Date: 15 September 2003 | : | COMMUNICATION |
| Priority Date Claimed: 16 September 2002 | : | |
| Attorney Docket No.: 23251 | : | |
| For: METHOD FOR MANUFACTURING AND | : | |
| CONTROLLING STRUCTURES . . . | : | |

This application is before the Office of PCT Legal Administration for consideration of issues arising under the Patent Cooperation Treaty.

## BACKGROUND

On 15 September 2003, applicant filed international application PCT/EP03/10242, which claimed priority of an earlier Italy application filed 16 September 2002. A copy of the international application was communicated to the USPTO from the International Bureau on 25 March 2004. The thirty-month period for paying the basic national fee in the United States expired on 16 March 2005.

On 16 March 2005, applicant filed purported national stage papers in the United States Designated/Elected Office (DO/EO/US). The submission, which was filed by The Firm of Karl F. Ross P.C., indicated "23251" as the attorney docket number and was assigned U.S. Application Number 10/528,378.

On 23 March 2005, applicant filed purported national stage papers in the DO/EO/US. The submission, which was filed by Modiano & Associati, indicated "39907/GM/Ip" as the attorney docket number and was assigned U.S. Application Number 10/528,775.

## DISCUSSION

The submission of two sets of national stage papers for a single international application was improper. A petition under 37 CFR 1.182 along with the requisite $400.00 petition fee is required to resolve the matter.

## CONCLUSION

A proper response must be filed within TWO (2) MONTHS from the mail date of this communication. Failure to timely file a proper response will result in ABANDONMENT of the application. Extensions of time are available under 37 CFR 1.136(a). A proper response would include an appropriate petition under 37 CFR 1.182 along with the required petition fee.

Please direct further correspondence with respect to this matter to Mail Stop PCT, Commissioner for Patents, Office of PCT Legal Administration, P.O. Box 1450, Alexandria, Virginia 22313-1450, with the contents of the letter marked to the attention of the Office of PCT Legal Administration.

Bryan Tung
PCT Legal Examiner
PCT Legal Office

Telephone: 571-272-3303
Facsimile: 571-273-0459

UNITED STATES PATENT AND TRADEMARK OFFICE

Commissioner for Patents
United States Patent and Trademark Office
P.O. Box 1450
Alexandria, VA 22313-1450
www.uspto.gov

KUBOTERA & ASSOCIATES, LLC
200 DAINGERFIELD RD
SUITE 202
ALEXANDRIA, VA 22314

COPY MAILED

JUL 29 2009

OFFICE OF PETITIONS

In re Application of
Fukashi Urakami
Application No. 10/528,384
Filed: January 3, 2006
Attorney Docket No. I-215

ON PETITION

This is a decision on the petition under 37 CFR 1.137(b), filed June 4, 2009, to revive the above-identified application.

The petition is **DISMISSED**.

Any request for reconsideration of this decision must be submitted within TWO (2) MONTHS from the mail date of this decision. Extensions of time under 37 CFR 1.136(a) are permitted. The reconsideration request should include a cover letter entitled "Renewed Petition under 37 CFR 1.137(b)." This is **not** a final agency action within the meaning of 5 U.S.C. § 704.

A grantable petition under 37 CFR 1.137(b) must be accompanied by: (1) the required reply, unless previously filed; (2) the petition fee as set forth in 37 CFR 1.17(m); (3) a statement that the entire delay in filing the required reply from the due date for the reply until the filing of a grantable petition pursuant to 37 CFR 1.137(b) was unintentional; and (4) any terminal disclaimer (and fee as set forth in 37 CFR 1.20(d)) required by 37 CFR 1.137(c). Where there is a question as to whether either the abandonment or the delay in filing a petition under 37 CFR 1.137 was unintentional, the Director may require additional information. See MPEP 711.03(c)(III)(C) and (D).

The petition lacks item 2 above.

It is noted that petitioner included a fee payment of $305; however, the total fee required was $860 ($810 for the requisite petition fee and $50 for the balance of the RCE filing fee). The $305 was first applied to the $50 fee deficiency for the RCE filing fee, leaving a balance of $255 to be applied towards the requisite $810 petition fee. The petition did not include an authorization to charge any fee deficiencies to a deposit account. Consequently, no consideration of the petition can be given until the $555 fee deficiency is received.

Further correspondence with respect to this matter should be delivered through one of the following mediums:

| | |
|---|---|
| By mail: | Mail Stop PETITIONS<br>Commissioner for Patents<br>Post Office Box 1450<br>Alexandria, VA 22313-1450 |
| By hand: | Customer Service Window<br>Mail Stop Petitions<br>Randolph Building<br>401 Dulany Street<br>Alexandria, VA 22314 |
| By fax: | (571) 273-8300<br>ATTN: Office of Petitions |
| By Internet: | EFS-Web[1] |

Telephone inquiries concerning this decision should be directed to the undersigned at (571) 272-3204.

Sherry D. Brinkley
Petitions Examiner
Office of Petitions

[1] www.uspto.gov/ebc/efs_help.html (for help using EFS-Web call the Patent Electronic Business Center at (866) 217-9197)

UNITED STATES PATENT AND TRADEMARK OFFICE

Commissioner for Patents
United States Patent and Trademark Office
P.O. Box 1450
Alexandria, VA 22313-1450
www.uspto.gov

KUBOTERA & ASSOCIATES, LLC
200 DAINGERFIELD RD
SUITE 202
ALEXANDRIA, VA 22314

COPY MAILED

NOV 0 5 2009

OFFICE OF PETITIONS

| | | |
|---|---|---|
| In re Application of | : | |
| Fukashi Urakami | : | |
| Application No. 10/528,384 | : | ON PETITION |
| Filed: January 3, 2006 | : | |
| Attorney Docket No. I-215 | : | |

This is a decision on the renewed petition under 37 CFR 1.137(b), filed July 30, 2009, to revive the above-identified application.

A review of the record discloses that this application became abandoned for a failure to timely reply to the final Office action mailed October 28, 2008. A Notice of Abandonment was mailed on May 18, 2009. In response, on June 4, 2009, a petition to revive under 37 CFR 1.137(b) was filed; however, the petition was dismissed in a decision mailed July 29, 2009. On July 30, 2009, the present petition was filed.

The petition satisfies the requirements of 37 CFR 1.137(b) in that petitioner has supplied (1) the reply in the form of a Request for Continued Examination (RCE) and fee of $405, and the submission required by 37 CFR 1.114; (2) the petition fee of $810; and (3) an adequate statement of unintentional delay.

This application is being referred to Technology Center AU 3611 for processing of the RCE and for appropriate action by the Examiner in the normal course of business on the amendment submitted in accordance with 37 CFR 1.114.

Telephone inquiries concerning this decision should be directed to the undersigned at (571) 272-3204. Inquiries relating to further prosecution should be directed to the Technology Center.

Sherry D. Brinkley
Petitions Examiner
Office of Petitions

UNITED STATES PATENT AND TRADEMARK OFFICE

Commissioner for Patents
United States Patent and Trademark Office
P.O. Box 1450
Alexandria, VA 22313-1450
www.uspto.gov

**LUCASH GESMER & UPDEGROVE, LLP**
**40 BROAD STREET, SUITE 300**
**BOSTON, MA 02109**

COPY MAILED

MAR 17 2008

OFFICE OF PETITIONS

| | | |
|---|---|---|
| In re Application of | : | |
| **HOWELLS**, Donald G. | : | |
| Application No. 10/528,394 | : | DECISION ON PETITION |
| Filed: September 12, 2005 | : | TO WITHDRAW |
| Attorney Docket No. **UDL-102-US** | : | FROM RECORD |
| | : | |

This is a decision on the Request to Withdraw as attorney or agent of record under 37 C.F.R. § 1.36(b), filed September 11, 2007.

The request is **NOT APPROVED** as moot.

A review of the file record indicates that the power of attorney to **LUCASH GESMER & UPDEGROVE, LLP** has been revoked by the applicant of the patent application on October 31, 2007. Accordingly, the request to withdraw under 37 C.F.R. § 1.36(b) is moot.

All future communications from the Office will continue to be directed to the below-listed address until otherwise notified by applicant.

Telephone inquires concerning this decision should be directed to the undersigned at 571-272-7253.

Monica A. Graves
Petitions Examiner
Office of Petitions

cc: **EDWIN D. SCHINDLER**
**FIVE HIRSCH AVENUE**
**P.O. BOX 966**
**CORAM, NY 11727-0966**

29 MAR 2005

#3

UNITED STATES PATENT AND TRADEMARK OFFICE

Commissioner for Patents
United States Patent and Trademark Office
P.O. Box 1450
Alexandria, VA 22313-1450
www.uspto.gov

Martin Fessenmaier
RUTAN & TUCKER, LLP
611 Anton Blvd., Suite 1400
Costa Mesa, CA 92626

| | | |
|---|---|---|
| In re Application of<br>MAK, John<br>U.S. Application No.: 10/528,435<br>PCT No.: PCT/US02/26278<br>Int. Filing Date: 15 August 2002<br>Priority Date: None<br>Docket No.: 100325.0193US<br>For: LOW PRESSURE LGL PLANT CONFIGURATIONS | : | **DECISION** |

Applicant's "Petition to Secure Filing Date as of Mailing Date Via Express Mail" filed 15 March 2005 requesting that the above-captioned application be deemed as filed in the national stage on 03 February 2005 is **DISMISSED** as **MOOT**.

A review of the above-captioned application shows that the papers filed 03 February 2005 are in the file and have been processed as received on that date.

The basic national fee of $300.00 (37 CFR 1.492(a), national stage search fee of $100.00 (37 CFR 1.492(b)(1), national stage examination fee of $200.00 (37 CFR 1.492(c)(2) and a surcharge fee of $130.00 (37 CFR 1.492(h) have been charged from Deposit Account No. 50-2191 as authorized.

This application is being forwarded to the United States Designated/Elected Office for further processing including mailing a Notification of Missing Requirements Under 35 U.S.C. 371 in the United States Designated/Elected Office (DO/EO/US) (Form PCT/DO/EO/905) indicating that an oath or declaration in compliance with 37 CFR 1.497(a) and (b) is required.

James Thomson

James Thomson
Attorney Advisor
Office of PCT Legal Administration

Tel.: (571) 272-3302

28 FEB 2006

#5

UNITED STATES PATENT AND TRADEMARK OFFICE

Commissioner for Patents
United States Patent and Trademark Office
P.O. Box 1450
Alexandria, VA 22313-1450
www.uspto.gov

Morgan & Finnegan, L.L.P.
3 World Financial Center
New York, New York 10281-2101

| | | |
|---|---|---|
| In re Application of<br>GODDEN et al.<br>Application No.: 10/528,442<br>PCT No.: PCT/US04/09565<br>Int. Filing: 29 March 2004<br>Priority Date: 28 March 2003<br>Attorney Docket No.: 4758-4101US1<br>For: SYSTEM AND METHOD OF EMPLOYING INDICIA ON WEB MATERIAL AND WEB MATERIAL USING SAME | : | DECISION ON PETITION<br>UNDER 37 CFR 1.47(a) |

This decision is issued in response to applicants' "Petition under 37 CFR 1.47(a)" filed 22 November 2005 to accept the application without the signature of joint inventor, Mark Godden. The $200 petition fee has been submitted.

## BACKGROUND

On 29 March 2004, applicants filed international application PCT/US04/09565, which claimed a priority date 28 March 2003. Pursuant to 37 CFR 1.495, the period for paying the basic national fee in the United States expired 30 months from the priority date, 28 September 2005.

On 18 March 2005, applicants filed a transmittal for entry into the national stage in the United States, which accompanied by, inter alia: the requisite basic national fee as required by 35 U.S.C. 371(c)(1); a copy of the international application; and the international search report.

On 23 September 2005, the United Stated Designated/Elected Office mailed a Notification of Missing Requirements under 35 U.S.C. 371 (Form PCT/DO/EO/905) indicating that an oath or declaration in compliance with 37 CFR 1.497(a) and (b) must be filed. The notification set a two-month time limit in which to respond.

On 22 November 2005, applicants filed the present petition under 37 CFR 1.47(a).

## DISCUSSION

A petition under 37 CFR 1.47(a) must be accompanied by (1) the fee under 37 CFR 1.17(h), (2) factual proof that the missing joint inventor refuses to execute the application or cannot be reached after diligent effort, (3) a statement of the last known address of the missing inventor, and (4) an oath or declaration by each 37 CFR 1.47(a) applicant on his or her own behalf and behalf of the non-signing joint inventor. Items (1),(3) and (4) have been satisfied.

Regarding item (2) above, Section 409.03(d) of the Manual of Patent Examining Procedure (M.P.E.P.), **Proof of Unavailability or Refusal**, states, in part:

> Where inability to find or reach a nonsigning inventor "after diligent effort" is the reason for filing under 37 CFR 1.47, an affidavit or declaration of facts should be submitted that fully describes the exact facts which are relied on to establish that a diligent effort was made.
>
> The fact that a nonsigning inventor is on vacation or out of town and is therefore temporarily unavailable to sign the declaration is not an acceptable reason for filing under 37 CFR 1.47. Such a petition will be dismissed as inappropriate.
>
> The affidavit or declaration of facts must be signed, where at all possible, by a person having firsthand knowledge of the facts recited therein. Statements based on hearsay will not normally be accepted.
>
> Copies of documentary evidence such as certified mail return receipt, cover letter of instructions, telegrams, etc., that support a finding that the nonsigning inventor could not be found or reached should be made part of the affidavit or declaration. It is important that the affidavit or declaration contain statements of fact as opposed to conclusions.
>
> Where a refusal of the inventor to sign the application papers is alleged, the circumstances of this refusal must be specified in an affidavit or declaration by the person to whom the refusal was made. Statements by a party not present when an oral refusal is made will not be accepted.

Petitioner states that Mark Godden has refused to execute the application. A review of the present petition and the accompanying papers reveals that applicants have not satisfied item (2) above, in that, the applicants have not shown that a bona fide attempt was made to present the application papers to Mark Godden. Keith McWha states that he mailed a copy of the application papers to Mark Godden on 24 August 2005. A copy of the cover letter has been provided. However, petitioner fails to include evidence to demonstrate that the materials were actually received by the nonsigning inventor at his last known address. Where the Office is being asked to accept the silence of the nonsigning inventor as evidence of a refusal to sign, petitioner must provide some evidence that the application materials have been received by the nonsigning applicant. Additionally, the statements

made with regards to the efforts to reach Mark Godden, on April 12, 2005 and August 17, 2005, constitutes secondhand knowledge, in that, the actions to which petitioner is averring to were conducted by Maureen Shook. Lastly, it is unclear if petitioner is presenting evidence that Mark Godden is refusing to execute the application or cannot be found or located after diligent effort.

For the above reasons, it would not be appropriate to accept this application without the signature of Mark Godden at this time.

## CONCLUSION

The petition under 37 CFR 1.47(a) is **DISMISSED** without prejudice.

If reconsideration on the merits of this petition is desired, a proper response must be filed within **TWO (2) MONTHS** from the mail date of this decision. Any reconsideration request should include a cover letter entitled "Renewed Petition Under 37 CFR 1.47(a)." No additional petition fee is required.

Any further correspondence with respect to this matter should be addressed to: Mail Stop PCT, Commissioner for Patents, Office of PCT Legal Administration, P.O. Box 1450, Alexandria, Virginia 22313-1450, with the contents of the letter marked to the attention of the Office of PCT Legal Administration.

Anthony Smith

Anthony Smith
Attorney-Advisor
Office of PCT Legal Administration
Tel: (571) 272-3298
Fax: (571) 273-0459

12 MAY 2006

UNITED STATES PATENT AND TRADEMARK OFFICE

Commissioner for Patents
United States Patent and Trademark Office
P.O. Box 1450
Alexandria, VA 22313-1450
www.uspto.gov

Morgan & Finnegan, L.L.P.
3 World Financial Center
New York, New York 10281-2101

In re Application of
GODDEN et al.
Application No.: 10/528,442
PCT No.: PCT/US04/09565
Int. Filing: 29 March 2004
Priority Date: 28 March 2003
Attorney Docket No.: 4758-4101US1
For: SYSTEM AND METHOD OF EMPLOYING INDICIA ON WEB MATERIAL AND WEB MATERIAL USING SAME

DECISION ON PETITION UNDER 37 CFR 1.47(a)

This decision is issued in response to applicants' "Petition under 37 CFR 1.47(a)" filed 19 April 2006 to accept the application without the signature of joint-inventor, Mark Godden.

## BACKGROUND

On 29 March 2004, applicants filed international application PCT/US04/09565, which claimed a priority date 28 March 2003. Pursuant to 37 CFR 1.495, the period for paying the basic national fee in the United States expired 30 months from the priority date, 28 September 2005.

On 18 March 2005, applicants filed a transmittal for entry into the national stage in the United States, which accompanied by, inter alia: the requisite basic national fee as required by 35 U.S.C. 371(c)(1); a copy of the international application; and the international search report.

On 23 September 2005, the United Stated Designated/Elected Office mailed a Notification of Missing Requirements under 35 U.S.C. 371 (Form PCT/DO/EO/905) indicating that an oath or declaration in compliance with 37 CFR 1.497(a) and (b) must be filed. The notification set a two-month time limit in which to respond.

On 22 November 2005, applicants filed a petition under 37 CFR 1.47(a). In a decision dated 28 February 2006, applicants' petition under 37 CFR 1.47(a) was dismissed without prejudice.

Application No.: 10/528,442

On 19 April 2006, applicants filed a renewed petition under 37 CFR 1.47(a).

## DISCUSSION

A petition under 37 CFR 1.47(a) must be accompanied by (1) the fee under 37 CFR 1.17(h), (2) factual proof that the missing joint inventor refuses to execute the application or cannot be reached after diligent effort, (3) a statement of the last known address of the missing inventor, and (4) an oath or declaration by each 37 CFR 1.47(a) applicant on his or her own behalf and behalf of the non-signing joint inventor. Items (1),(3) and (4) have been satisfied.

A review of the present petition reveals that applicants have satisfied item (2), in that the applicants have shown that a bona fide attempt was made to present the application papers, including the specification, claims, and drawings to Mark Godden. The steps taken by Keith McWha are sufficient to show that Mark Godden has refused to execute the application.

Accordingly, it is appropriate to accord the national stage application status under 37 CFR 1.47(a).

## CONCLUSION

For the reasons above, applicants' renewed petition under 37 CFR 1.47(a) is **GRANTED**.

As provided in 37 CFR 1.47(a), a notice of the filing of this application will be forwarded to the non-signing inventor at his last known address of record.

A notice of the filing of the application under 37 CFR 1.47(a) will be published in the Official Gazette.

This application is being returned to the United States Designated/Elected Office for processing in accordance with this decision.

Anthony Smith

Anthony Smith
Attorney-Advisor
Office of PCT Legal Administration
Tel: (571) 272-3298
Fax: (571) 273-0459

12 MAY 2006

UNITED STATES PATENT AND TRADEMARK OFFICE

Commissioner for Patents
United States Patent and Trademark Office
P.O. Box 1450
Alexandria, VA 22313-1450
www.uspto.gov

Mark Godden
West Hartley Farm
Blackawton
Devon TQ9 7DH
Great Britain

In re Application of
GODDEN et al.
Application No.: 10/528,442
PCT No.: PCT/US04/09565
Int. Filing: 29 March 2004
Priority Date: 28 March 2003
Attorney Docket No.: 4758-4101US1
For: SYSTEM AND METHOD OF EMPLOYING INDICIA ON WEB MATERIAL AND WEB MATERIAL USING SAME

Dear Mr. Godden:

You are named as an inventor in the above identified United States patent application, filed under the provisions of 37 CFR 1.47(a) and 35 U.S.C. 116. Should a patent be granted, you will be designated as an inventor.

As a named inventor, you are entitled to inspect any paper in the file wrapper of the application, order copies of all or any part thereof (at a prepaid cost per 37 CFR 1.19) or to make your position of record in the application. Alternatively, you may arrange to do any of the preceding through a registered patent agent or attorney presenting written authorization from you. If you care to join in the application, counsel of record (see below) would presumably assist you. Joining in the application would entail the filing of an appropriate oath or declaration by you pursuant to 37 CFR 1.63.

Anthony Smith

Anthony Smith
Attorney-Advisor
Office of PCT Legal Administration
Telephone: (571) 272-3298
Facsimile: (571) 273-0459

Counsel of Record:
Morgan & Finnegan, L.L.P.
3 World Financial Center
New York, New York 10281-2101

UNITED STATES PATENT AND TRADEMARK OFFICE

UNITED STATES DEPARTMENT OF COMMERCE
United States Patent and Trademark Office
Address: COMMISSIONER FOR PATENTS
P.O. Box 1450
Alexandria, Virginia 22313-1450
www.uspto.gov

BLAKELY SOKOLOFF TAYLOR & ZAFMAN LLP
1279 OAKMEAD PARKWAY
SUNNYVALE, CA 94085-4040

Mail Date: 04/21/2010

| | | |
|---|---|---|
| **Applicant** | : Chang-Hee Lee | : DECISION ON REQUEST FOR |
| **Patent Number** | : 7593647 | : RECALCULATION of PATENT |
| **Issue Date** | : 09/22/2009 | : TERM ADJUSTMENT IN VIEW |
| **Appliction No** | : 10/528,445 | : OF WYETH AND NOTICE OF INTENT TO |
| **Filed** | : 03/18/2005 | : ISSUE CERTIFICATE OF CORRECTION |
| | | : |

The Request for Recalculation is **GRANTED** to the extent indicated.

The patent term adjustment has been determined to be **501** days. The USPTO will *sua sponte* issue a certificate of correction reflecting the amount of PTA days determined by the recalculation.

Prior to the issuance of the certificate of correction, the USPTO will afford patentee an opportunity to be heard and request reconsideration. Accordingly, patentee has **one month or thirty (30) days**, whichever is longer, to file a request for reconsideration of this patent term adjustment calculation. See 35 U.S.C. 154(b)(3)(B)(ii) and 37 CFR 1.322(a)(4). No extensions of time will be granted under 37 CFR 1.136.

Patentee should use document code PET.OP if electronically filing a request for reconsideration of this patent term adjustment calculation. The patentee must also include the information required by 37 CFR 1.705(b)(2) and the fee required by 37 CFR 1.18(e). If patentee does not file a timely request for reconsideration of this patent term adjustment calculation including the information required by 37 CFR 1.705(b)(2) and the fee required by 37 CFR 1.18(e), the USPTO will issue a certificate of correction reflecting the PTA determination noted above.

Patentee should be aware that in order to preserve the right to review in the United States District Court for the District of Columbia of the USPTO patent term adjustment determination, patentee must ensure that he or she also take the steps required under 35 U.S.C. 154(b)(4)(A) in a timely manner. Nothing in the request for recalculation should be construed as providing an alternative time frame for commencing a civil action under 35 U.S.C. 154(b)(4)(A).

Any questions concerning this decision should be directed to the Office of Patent Legal Administration at 571-272-7702.

UNITED STATES PATENT AND TRADEMARK OFFICE

Commissioner for Patents
United States Patent and Trademark Office
P.O. Box 1450
Alexandria, VA 22313-1450
www.uspto.gov

27 OCT 2008

WARE FRESSOLA VAN DER SLUYS & ADOLPHSON, LLP
BRADFORD GREEN, BUILDING 5
755 MAIN STREET, P O BOX 224
MONROE CT 06468

| | | |
|---|---|---|
| In re Application of | : | |
| MULLIGAN | : | |
| Application No.: 10/528,459 | : | NOTIFICATION |
| PCT No.: PCT/IB202/003890 | : | |
| Int. Filing Date: 20 September 2002 | : | |
| Priority Date: None | : | |
| Attorney Docket No.: 915-006.072 | : | |
| For: METHOD, DEVICE AND SYSTEM FOR | : | |
| PROVIDING ADDITIONAL . . . TERMINAL DEVICES | : | |

This notification is in response to applicant's submission filed 21 August 2008.

## BACKGROUND

On 20 September 2002, applicant filed international application PCT/IB2002/003890 which designated the U.S. and did not claim a priority date. A copy of the international application was communicated to the United States Patent and Trademark Office (USPTO) from the International Bureau on 29 April 2004. The thirty-month period for paying the basic national fee in the United States expired at midnight on 21 March 2005 (20 March 2005 being a Sunday).

On 18 March 2005, applicant filed a transmittal letter for entry into the national stage in the United States, which was accompanied by, *inter alia*, the Basic National Fee, a declaration of inventors, and preliminary amendment.

On 18 October 2005, the United States Designated/Elected Office (DO/EO/US) mailed a NOTICE OF ACCEPTANCE OF APPLICATION UNDER 35 U.S.C. 371 (Form PCT/DO/EO/903) according the application a 35 U.S.C. 371 (c)(1), (c)(2), and (c)(4) date of 18 March 2005. The NOTICE also indicated that a copy of the IPE Report was filed on 18 March 2005.

On 21 August 2008, applicant filed the instant submission requesting that the Office of PCT Legal Administration make a determination as to which set of claims are to be examined: claims 1-25 in the published international application or claims 1-23 included as an Annex to the

NOTIFICATION OF TRANSMITTAL OF INTERNATIONAL PRELIMINARY REPORT ON PATENTABILITY (Chapter II of the Patent Cooperation Treaty) (Form PCT/IPEA/416).

## DISCUSSION

MPEP § 1893.01(a)(3) states in part:

> Amendments to the international application that were properly made under PCT Article 34 during the international preliminary examination phase (i.e., Chapter II) will be annexed by the International Preliminary Examining Authority to the international preliminary examination report (IPER) and communicated to the elected Offices. See PCT Article 36, PCT Rule 70.16, and MPEP § 1893.03(e). If these annexes are in English, they will normally be entered into the U.S. national stage application by the Office absent a clear instruction by the applicant that the annexes are not to be entered. (emphasis added)

Here, there is no clear instruction by the applicant that the annexes not be entered. Accordingly, the annexes should be entered. Thus, it is claims 1-23 included as an Annex to the NOTIFICATION OF TRANSMITTAL OF INTERNATIONAL PRELIMINARY REPORT ON PATENTABILITY (Chapter II of the Patent Cooperation Treaty) rather than claims 1-25 as published in the international application which are to be examined.

## CONCLUSION

Any inquiries concerning this decision may be directed to Daniel Stemmer at 571-272-3301. All other inquiries concerning either the examination procedures or status of the application should be directed to the Technology Center.

This matter is being referred to the examiner of Technology Center Art Unit 2451 for appropriate action consistent with this notification.

/Daniel Stemmer/

Daniel Stemmer
Legal Examiner
PCT Legal Affairs
Office of Patent Cooperation Treaty
Legal Administration
Telephone: (571) 272-3301
Facsimile: (571) 273-0459

# UNITED STATES PATENT AND TRADEMARK OFFICE

UNITED STATES DEPARTMENT OF COMMERCE
United States Patent and Trademark Office
Address: COMMISSIONER FOR PATENTS
P.O. Box 1450
Alexandria, Virginia 22313-1450
www.uspto.gov

| APPLICATION NO. | FILING DATE | FIRST NAMED INVENTOR | ATTORNEY DOCKET NO. | CONFIRMATION NO. |
|---|---|---|---|---|
| 10/528,459 | 03/18/2005 | Michael Mulligan | 915-006.072 | 4930 |

4955 7590 05/04/2009
WARE FRESSOLA VAN DER SLUYS & ADOLPHSON, LLP
BRADFORD GREEN, BUILDING 5
755 MAIN STREET, P O BOX 224
MONROE, CT 06468

| EXAMINER |
|---|
| LINDSEY, MATTHEW S |

| ART UNIT | PAPER NUMBER |
|---|---|
| 2451 | |

| MAIL DATE | DELIVERY MODE |
|---|---|
| 05/04/2009 | PAPER |

**Please find below and/or attached an Office communication concerning this application or proceeding.**

The time period for reply, if any, is set in the attached communication.

UNITED STATES PATENT AND TRADEMARK OFFICE

Commissioner for Patents
United States Patent and Trademark Office
P.O. Box 1450
Alexandria, VA 22313-1450
www.uspto.gov

Francis J. Maguire
WARE FRESSOLA VAN DER SLUYS & ADOLPHSON, LLP
BRADFORD GREEN, BUILDING 5
755 MAIN STREET, P.O. BOX 224
MONROE CT 06468

MAILED

MAY 04 2009

TECHNOLOGY CENTER 2100

In re Application of:
Michael Mulligan.
Application No. **10/528,459**
Filed: March 18, 2005
Docket No. 915-006.072
Title: METHOD, DEVICE AND SYSTEM FOR PROVIDING ADDITIONAL INFORMATION RELATED TO THE CONTENTS OF A RADIO BROADCAST TO TERMINAL DEVICES

DECISION ON PETITION
UNDER 37 C.F.R. § 1.181

This is a decision on the petition filed November 28, 2008 under 37 CFR § 1.181 to invoke Supervisory Authority of the Commissioner and require the Examiner to withdraw the finality of the rejection mailed October 28, 2008.

The Applicant's counsel filed a petition to the Director under 37 CFR § 1.181 to seek relief from actions of the Examiner in relation to the Final Office Action October 28, 2008. In the petition, Applicant's counsel alleged that the finality of the office action was improper in light of the notification from the Legal Examiner of PCT Legal Affairs in the Office of Patent Cooperation Treaty Legal Administration received thereby on October 30, 2008. The notification indicates that the Office of Patent Cooperation Treaty Legal Administration made a determination that the claims **1-23** included as an annex to the Form PCT/IPEA/416 are the claims that should have been examined. Since the Examiner has examined the wrong set of claims, it is requested that the finality of the action of October 28, 2008 be withdrawn and a non-final Office Action be issued examining the correct set of claims 1-23.

This petition is **GRANTED.**

## RELEVANT HISTORY PROSECUTION

03/18/08 Original claims are filed 1-25

03/18/08 Preliminary amendment filed claims 1-23

06/06/08 Non-final action is mailed in response to amendment filed March 18, 2005.

08/21/08 Petition for review and processing by PCT legal office. It was requested that the PCT Legal Group confer with the Examination Group and address this situation so that the *objection to the numbering* of the claims is withdrawn and that the Examining group recognize that the claim numbering upon entering the U.S. National Stage was claims 1-23, not claims 1-25.

09/02/08 Amendment in response to non-final office action mailed 06/06/08 is filed, where **claims 1-23 were amended.**

10/27/08 Petition decision by the PCT Legal Affairs is mailed. Decision states: "Here, there is no clear instruction by the applicant that the annexes not be entered. Accordingly, the annexes should be entered. Thus, it is claims 1-23 included as an Annex to the NOTIFICATION OF TRANSMITTAL OF INTERNATIONAL PRELIMINARY REPORT ON PATENTAB/LITY (Chapter II of the Patent Cooperation Treaty) rather than claims 1-25 as published in the international application which are to be examined."

10/28/08 Final office action is mailed in response to amendment filed 9/02/08.

11/28/08 Petition for review by the Technology Center SPRE – requesting examiner to withdraw the final rejection of October 28, 2008 in light of the notification from the Legal Examiner of PCT Legal Affairs in the Office of Patent Cooperation Treaty Legal Administration that we received on October 30, 2008. The notification indicates that the Office of Patent Cooperation Treaty Legal Administration has made a determination that the *claims 1-23* included as an annex to the Form PCT/IPEA/416 are the claims that *should have been examined.*

## REGULATION AND PROCEDURES

### 93.01(a) (2) [R-3] Article 19 Amendment (Filed With the International Bureau)

The claims of an international application may be amended under PCT Article 19 after issuance of the search report. The description and drawings may not be amended under PCT Article 19. The amendment is forwarded to the U.S. Designated Office by the International Bureau for inclusion in the U.S. national stage application. Article 19 amendments which were made in English will be entered by substituting each page of amendment for the corresponding English language page of claims of the international application. If the Article 19 amendments were made in a language other than English, applicant must provide an English translation for the U.S. national stage application. The Article 19 amendment(s) and the English translation of the amendment(s) must be received by the Office by the date of commencement of the national stage (see MPEP § 1893.01). Otherwise, the amendment(s) will be considered to be canceled, 35 U.S.C. 371(d). If such canceled amendments are desired, they must be offered under 37 CFR 1.121 as a preliminary amendment or a responsive amendment under 37 CFR 1.111. Applicants entering the national stage in the U.S. are *encouraged* to submit an amendment in accordance with *37 CFR 1.121* rather than an English translation of an Article 19 amendment.

**§ 1.121 Manner of making amendments in applications.**

c) Claims. Amendments to a claim must be made by rewriting *the entire claim* with all changes (e.g., additions and deletions) as indicated in this subsection, except when the claim is being canceled. Each amendment document that includes a *change to an existing claim, cancellation of an existing claim or addition of a new claim, must include a complete listing of all claims ever presented*, including the text of all pending and withdrawn claims, in the application. The claim listing, including the text of the claims, in the amendment document will serve to replace all prior versions of the claims, in the application. In the claim listing, the status of every claim must be indicated after its claim number by using one of the following identifiers in a parenthetical expression: (Original), (Currently amended), (Canceled), (Withdrawn), (Previously presented), (New), and (Not entered).

(1) Claim listing. All of the claims presented in a claim listing shall be presented in *ascending numerical order*. Consecutive claims having the same status of "canceled" or "not entered" may be aggregated into one statement (e.g., Claims 1–5 (canceled)). The claim listing shall commence on a separate sheet of the amendment document and the sheet(s) that contain the text of any part of the claims shall not contain any other part of the amendment.

**DECISION**

In view of the Office of Patent Cooperation Treaty Legal Administration determination dated 11/28/08 that the claims 1-23 included as an annex to the Form PCT/IPEA/416 are the claims that should have been examined, this petition is **GRANTED**.

Claims 1-23 to be examined filed on 3/18/08 have been amended by Applicant's reply filed 9/02/08. The final Office action mailed 10/28/08 is hereby **vacated** and a new Office action will be mailed in due course. The new office action will treat on the merits claims **1-23**, as amended on 9/02/08.

Any inquiry regarding this decision should be directed the undersigned whose telephone number is (571) 272-3902. If attempts to reach the undersigned by telephone are unsuccessful, Tod Swann, Quality Assurance Specialist, can be reached at (571) 272-4147.

/bp/

/Beatriz Prieto/

Beatriz Prieto, Quality Assurance Specialist
Technology Center 2400,
**Network, Multiplexing, Cable and Security**

14 JUN 2006

UNITED STATES PATENT AND TRADEMARK OFFICE

Commissioner for Patents
United States Patent and Trademark Office
P.O. Box 1450
Alexandria, VA 22313-1450
www.uspto.gov

Ajay Pathak
Harness, Dickey & Pierce, P.L.C.
P.O. Box 8910
Reston, VA 20195

| | |
|---|---|
| In re Application of | : |
| Dingwell, et al. | : |
| Application No.: 10/528,469 | : DECISION ON |
| PCT No.: PCT/AU2003/001284 | : |
| Int. Filing Date: 29 September 2003 | : PETITION UNDER |
| Priority Date: 30 September 2002 | : |
| Attorney's Docket No.: 6180-000001/US | : 37 CFR 1.47(a) |
| For: COMPONENT INTERLOCKING | : |

This is a decision in response to the "REQUEST FOR CORRECTION OF INVENTORSHIP PURSUANT TO 35 U.S.C. § 116 AND 37 C.F.R. § 1.48" filed 07 March 2006, which is being treated as a petition under 37 CFR 1.47(a) and a request under 37 CFR 1.497.

## BACKGROUND

On 29 September 2003, applicant filed international application PCT/AU2003/001284 that claimed priority of an earlier Australian application filed 30 September 2002. A copy of the international application was communicated to the United States Patent and Trademark Office from the International Bureau on 08 April 2004. Accordingly, the thirty-month period for paying the basic national fee for the national stage in the United States expired at midnight on 29 March 2005.

On 21 March 2005, applicant filed a transmittal letter for entry into the national stage in the United States which was accompanied by a copy of the international application, a declaration of inventorsip and the basic national fee of $300 as required by 35 U.S.C. 371(c). These papers were assigned application number 10/528,469.

On 18 October 2005, the United States Patent and Trademark Office in its capacity as an Elected Office mailed the "NOTIFICATION OF ACCEPTANCE OF APPLICATION UNDER 35 U.S.C. 371 AND 37 CFR 1.495" (Form PCT/DO/EO/903).

On 07 March 2006, applicant filed this "REQUEST FOR CORRECTION OF INVENTORSHIP PURSUANT TO 35 U.S.C. § 116 AND 37 C.F.R. § 1.48." This request included statements by the two inventors who wish to be added to the application, written consent of the assignee and declarations signed by the original inventor and the two inventors who wish to be added to the application. Applicant also included $130.00 of the petition fee. The petition fee is $200, so an additional $70 has been charged to applicant's deposit account.

## DISCUSSION

37 CFR 1.497 states, in part:

> (a) When an applicant of an international application desires to enter the national stage under 35 U.S.C. 371 pursuant to § 1.495, and a declaration in compliance with this section has not been previously submitted in the international application under PCT Rule 4.17(iv) within the time limits provided for in PCT Rule 26*ter*.1, he or she must file an oath or declaration that:
>
> (1) Is executed in accordance with either §§ 1.66 or 1.68;
>
> (2) Identifies the specification to which it is directed;
>
> (3) Identifies each inventor and the country of citizenship of each inventor; and
>
> (4) States that the person making the oath or declaration believes the named inventor or inventors to be the original and first inventor or inventors of the subject matter which is claimed and for which a patent is sought.

The declaration signed by inventor Dingwall is improper in that it does not comply with 37 CFR 1.497, i.e., inventor Dingwall removed the statement "or an original, first and joint inventor (if plural names are listed below)." Therefore, inventor Dingwall's declaration is improper.

If inventor Dingwall refuses to sign a proper declaration, then applicants would need to file a petition under 37 CFR 1.47(a).

A petition under 37 CFR 1.47(a) must be accompanied by (1) the fee under 37 CFR 1.17(g), (2) factual proof that the missing joint inventor refuses to execute the application or cannot be reached after diligent effort, (3) a statement of the last known address of the missing, and (4) an oath or declaration by each 37 CFR 1.47(a) applicant on his or her own behalf and on behalf of the non-signing inventor.

Currently, items (2), (3) and (4) are missing.

## CONCLUSION

The petition under 37 CFR 1.47(a) is **DISMISSED**.

The request under 37 CFR 1.497(d) is **DISMISSED**.

Applicant's **deposit account # 08-0750** has been **charged $70** for the deficiency in the petition fee.

If reconsideration on the merits of this petition is desired, a proper response must be filed within TWO (2) MONTHS from the mail date of this decision. Any reconsideration request should include a cover letter entitled "Renewed Petition Under 37 CFR 1.47(a)." No additional petition fee is required. Extensions of time may be obtained under 37 CFR 1.136(a).

Any further correspondence with respect to this matter should be addressed to the Mail Stop PCT, Commissioner for Patents, Office of PCT Legal Administration, P.O. Box 1450, Alexandria, Virginia 22313-1450, with the contents of the letter marked to the attention of the Office of PCT Legal Administration.

Debra S. Brittingham
PCT Special Programs Examiner
PCT Legal Office

Leonard Smith
PCT Legal Examiner
PCT Legal Office

Telephone: (571) 272-3280
Facsimile: (571) 273-0459

22 NOV 2006

UNITED STATES PATENT AND TRADEMARK OFFICE

Commissioner for Patents
United States Patent and Trademark Office
P.O. Box 1450
Alexandria, VA 22313-1450
www.uspto.gov

Ajay Pathak
Harness, Dickey & Pierce, P.L.C.
P.O. Box 8910
Reston, VA 20195

| | | |
|---|---|---|
| In re Application of | : | |
| Dingwell, et al. | : | |
| Application No.: 10/528,469 | : | DECISION ON |
| PCT No.: PCT/AU2003/001284 | : | |
| Int. Filing Date: 29 September 2003 | : | RENEWED PETITION |
| Priority Date: 30 September 2002 | : | |
| Attorney's Docket No.: 6180-000001/US | : | |
| For: COMPONENT INTERLOCKING | : | |

This decision in response to the "RENEWED PETITION UNDER 37 CFR 1.47(A) IN U.S. PATENT APPLICATION NO. 10/528,469" filed 09 August 2006, which is being treated as a petition under 37 CFR 1.48(a) and a request under 37 CFR 1.497(d). No further petition fee is due.

## BACKGROUND

On 29 September 2003, applicant filed international application PCT/AU2003/001284 that claimed priority of an earlier Australian application filed 30 September 2002. A copy of the international application was communicated to the United States Patent and Trademark Office from the International Bureau on 08 April 2004. Accordingly, the thirty-month period for paying the basic national fee for the national stage in the United States expired at midnight on 29 March 2005.

On 21 March 2005, applicant filed a transmittal letter for entry into the national stage in the United States which was accompanied by a copy of the international application, a declaration of inventorsip and the basic national fee of $300 as required by 35 U.S.C. 371(c). These papers were assigned application number 10/528,469.

On 18 October 2005, the United States Patent and Trademark Office in its capacity as an Elected Office mailed the "NOTIFICATION OF ACCEPTANCE OF APPLICATION UNDER 35 U.S.C. 371 AND 37 CFR 1.495" (Form PCT/DO/EO/903).

On 07 March 2006, applicant filed this "REQUEST FOR CORRECTION OF INVENTORSHIP PURSUANT TO 35 U.S.C. § 116 AND 37 C.F.R. § 1.48." This request included statements by the two inventors who wish to be added to the application, written consent of the assignee and declarations signed by the original inventor and the two inventors who wish to be added to the application. Applicant also included the petition fee of $130.00.

On 14 June 2006, a decision was mailed to applicant indicating that the declaration signed by inventor Dingwall was improper in that it did not comply with 37 CFR 1.497.

On 14 August 2006, applicant filed the current response.

## DISCUSSION

37 CFR .148 states, in part:

> Amendment of the inventorship requires: (1) A request to correct the inventorship that sets forth the desired inventorship change; (2) A statement from each person being added as an inventor and from each person being deleted as an inventor that the error in inventorship occurred without deceptive intention on his or her part; (3) An oath or declaration by the actual inventor or inventors as required by § 1.63 or as permitted by §§ 1.42, 1.43 or § 1.47; (4) The processing fee set forth in § 1.17(i); and (5) If an assignment has been executed by any of the original named inventors, the written consent of the assignee (see § 3.73(b) of this chapter).

Further, a request under 37 CFR 1.497(d) must be accompanied by (1) a statement from each person being added as an inventor and from each person being deleted as an inventor that any error in inventorship in the international application occurred without deceptive intention on his or her part, (2) the processing fee set forth in § 1.17(i), and (3) If an assignment has been executed by any of the original named inventors, the written consent of the assignee.

Applicants have now provided a properly signed declaration from inventor Dingwall. Further, applicant has provided the earlier signed declarations from inventors Brinkley and Gale, who are being added to the declaration. Additionally, applicants have provided a statement of consent signed by the assigness, Cutting Edges Replacement Parts PTY LTD.

## CONCLUSION

The petition under 37 CFR 1.48 and the request under 37 CFR 1.497(d) is **GRANTED**.

Applicant paid the petition fee ($130 by check, $70 by deposit account) with the earlier filed petition. On 09 August 2006, with the filing of the current petition, applicant paid another $200 petition fee by credit card. The **$200 fee paid on 09 August 2006 has been REFUNDED** to applicant's credit card.

Any further correspondence with respect to this matter should be addressed to the Mail Stop PCT, Commissioner for Patents, Office of PCT Legal Administration, P.O. Box 1450, Alexandria, Virginia 22313-1450, with the contents of the letter marked to the attention of the Office of PCT Legal Administration.

Debra Brittingham
PCT Special Programs Examiner
Office of PCT Legal Administration

Tel: (571) 272-3280
Fax: (571) 273-0459

Boris Milef
for

Leonard Smith
PCT Legal Examiner
Office of PCT Legal Administration

UNITED STATES PATENT AND TRADEMARK OFFICE

UNITED STATES DEPARTMENT OF COMMERCE
United States Patent and Trademark Office
Address: COMMISSIONER FOR PATENTS
P.O. Box 1450
Alexandria, Virginia 22313-1450
www.uspto.gov

Webb Ziesenheim Logsdon Orkin & Hanson
700 Koppers Building
436 Seventh Avenue
Pittsburgh, PA 15219-1818

Mail Date: 04/21/2010

| | | |
|---|---|---|
| **Applicant** | : Marcus Karel Sipkema | : DECISION ON REQUEST FOR |
| **Patent Number** | : 7609842 | : RECALCULATION of PATENT |
| **Issue Date** | : 10/27/2009 | : TERM ADJUSTMENT IN VIEW |
| **Appliction No** | : 10/528,495 | : OF WYETH AND NOTICE OF INTENT TO |
| **Filed** | : 09/21/2006 | : ISSUE CERTIFICATE OF CORRECTION |
| | | : |

The Request for Recalculation is **GRANTED** to the extent indicated.

The patent term adjustment has been determined to be **706** days. The USPTO will *sua sponte* issue a certificate of correction reflecting the amount of PTA days determined by the recalculation.

Prior to the issuance of the certificate of correction, the USPTO will afford patentee an opportunity to be heard and request reconsideration. Accordingly, patentee has **one month or thirty (30) days**, whichever is longer, to file a request for reconsideration of this patent term adjustment calculation. See 35 U.S.C. 154(b)(3)(B)(ii) and 37 CFR 1.322(a)(4). No extensions of time will be granted under 37 CFR 1.136.

Patentee should use document code PET.OP if electronically filing a request for reconsideration of this patent term adjustment calculation. The patentee must also include the information required by 37 CFR 1.705(b)(2) and the fee required by 37 CFR 1.18(e). If patentee does not file a timely request for reconsideration of this patent term adjustment calculation including the information required by 37 CFR 1.705(b)(2) and the fee required by 37 CFR 1.18(e), the USPTO will issue a certificate of correction reflecting the PTA determination noted above.

Patentee should be aware that in order to preserve the right to review in the United States District Court for the District of Columbia of the USPTO patent term adjustment determination, patentee must ensure that he or she also take the steps required under 35 U.S.C. 154(b)(4)(A) in a timely manner. Nothing in the request for recalculation should be construed as providing an alternative time frame for commencing a civil action under 35 U.S.C. 154(b)(4)(A).

Any questions concerning this decision should be directed to the Office of Patent Legal Administration at 571-272-7702.

UNITED STATES PATENT AND TRADEMARK OFFICE

Commissioner for Patents
United States Patent and Trademark Office
P.O. Box 1450
Alexandria, VA 22313-1450
www.uspto.gov

**Haynes and Boone, LLP**
**901 Main Street, Suite 3100**
**Dallas, TX 75202**

COPY MAILED

MAY 29 2007

OFFICE OF PETITIONS

In re Application of
Brock Wayne Watson et al.
Application No. 10/528,497
Filed: October 28, 2005
Attorney Docket No. 25791.114.08

DECISION ON PETITION
TO WITHDRAW
FROM RECORD

This is a decision on the Request to Withdraw as attorney or agent of record under 37 C.F.R. § 1.36(b), filed April 18, 2007.

The request is **NOT APPROVED**.

A grantable request to withdraw as attorney/agent of record must be signed by every attorney/agent seeking to withdraw or contain a clear indication that one attorney is signing on behalf of another/others. A request to withdraw will not be approved unless at least 30 (thirty) days would remain between the date of approval and the later of the expiration date of a time to file a response or the expiration date of the maximum time period which can be extended under 37 C.F.R. § 1.136(a).

The request cannot be approved because no reasons for withdrawal have been provided. The Office cannot, at this time, determine whether practitioner's request is one of the mandatory or permissive reasons enumerated in 37 CFR 10.40. Any subsequent requests must include reasons for withdrawal. Please note that there is a space provided for on PTO/SB/83 (Request to Withdraw as Attorney or Agent) to supply practitioner's reasons.

A courtesy copy of this decision is being mailed to the first named inventor at the address noted in the Declaration for Patent Application, as well as to the address noted in the request. If the attorneys with this firm desires to receive future communication concerning this application, proper power of attorney documents should be submitted.

There are no outstanding office actions at this time.

All future communications from the Office will continue to be directed to the above-listed address until otherwise notified by applicant.

Telephone inquiries concerning this decision should be directed to Kimberly Inabinet at 571-272- 4618.

Frances Hicks
Petitions Examiner
Office of Petitions

cc: Brock Wayne Watson
2535 Marsh Lane, #1004
Carrollton, TX 75006

cc: King & Spalding, LLP
1100 Louisiana Street, Suite 4000
Houston, TX 77002

UNITED STATES PATENT AND TRADEMARK OFFICE

Commissioner for Patents
United States Patent and Trademark Office
P.O. Box 1450
Alexandria, VA 22313-1450
www.uspto.gov

**COPY MAILED**

NOV 03 2008

**OFFICE OF PETITIONS**

**HAYNES AND BOONE, LLP**
**IP SECTION**
**2323 VICTORY AVENUE**
**SUITE 700**
**DALLAS, TX 75219**

| | | |
|---|---|---|
| In re Application of | : | |
| **SHUSTER,** Mark et al. | : | |
| Application No. 10/528,498 | : | DECISION ON PETITION |
| Filed: November 08, 2005 | : | TO WITHDRAW |
| Attorney Docket No. **25791.118.08** | : | FROM RECORD |
| | : | |

This is a decision on the Request to Withdraw as attorney or agent of record under 37 C.F.R. § 1.36(b), filed April 18, 2007.

The request is **NOT APPROVED** because it is moot.

A review of the file record indicates that the power of attorney to Haynes and Boone, LLP has been revoked by the assignee of the patent application on April 29, 2008. Accordingly, the request to withdraw under 37 C.F.R. § 1.36(b) is moot.

All future communications from the Office will continue to be directed to the below-listed address until otherwise notified by applicant.

Telephone inquires concerning this decision should be directed to Michelle R. Eason at 571-272-4231.

Michelle R. Eason
Paralegal Specialist
Office of Petitions

cc: **CONLEY ROSE, P.C**
**P.O. BOX 3267**
**HOUSTON, TX 77253-3267**

UNITED STATES PATENT AND TRADEMARK OFFICE

Commissioner for Patents
United States Patent and Trademark Office
P.O. Box 1450
Alexandria, VA 22313-1450
www.uspto.gov

**Haynes and Boone, LLP**
**901 Main Street, Suite 3100**
**Dallas, TX 75202**

**COPY MAILED**

AUG 0 6 2007

**OFFICE OF PETITIONS**

In re Application of
Mark Schuster et al.
Application No. 10/528,499
Filed: November 8, 2005
Attorney Docket No. 25791.121.05

DECISION ON PETITION
TO WITHDRAW
FROM RECORD

This is a decision on the Request to Withdraw as attorney or agent of record under 37 C.F.R. § 1.36(b), filed April 18, 2007.

The request is **NOT APPROVED**.

A grantable request to withdraw as attorney/agent of record must be signed by every attorney/agent seeking to withdraw or contain a clear indication that one attorney is signing on behalf of another/others. A request to withdraw will not be approved unless at least 30 (thirty) days would remain between the date of approval and the later of the expiration date of a time to file a response or the expiration date of the maximum time period which can be extended under 37 C.F.R. § 1.136(a).

The request cannot be approved because no reasons for withdrawal have been provided. The Office cannot, at this time, determine whether practitioner's request is one of the mandatory or permissive reasons enumerated in 37 CFR 10.40. Any subsequent requests must include reasons for withdrawal. Please note that there is a space provided for on PTO/SB/83 (Request to Withdraw as Attorney or Agent) to supply practitioner's reasons.

A courtesy copy of this decision is being mailed to the first named signing inventor. A courtesy copy is being mailed to the address noted in the request. If the attorneys with this firm desire to receive future communication concerning this application, the proper power of attorney documents should be submitted.

There are no outstanding Office actions at this time.

All future communications from the Office will continue to be directed to the above-listed address until otherwise notified by applicant.

Telephone inquiries concerning this decision should be directed to Kimberly Inabinet at 571-272- 4618.

Frances Hicks
Petitions Examiner
Office of Petitions

cc: Scott Costa
2011 Willow Point
Kingwood, TX 77330

cc: Todd Mattingly
King & Spalding, LLP
1100 Louisiana Street, Suite 4000
Houston, TX 77002

UNITED STATES PATENT AND TRADEMARK OFFICE

Commissioner for Patents
United States Patent and Trademark Office
P.O. Box 1450
Alexandria, VA 22313-1450
www.uspto.gov

**Haynes and Boone, LLP**
**901 Main Street, Suite 3100**
**Dallas, TX 75202**

COPY MAILED

NOV 0 2 2007

OFFICE OF PETITIONS

| | |
|---|---|
| In re Application of | |
| Mark Schuster et al. | |
| Application No. 10/528,499 | DECISION ON PETITION |
| Filed: November 8, 2005 | TO WITHDRAW |
| Attorney Docket No. 25791.121.05 | FROM RECORD |

This is a decision on the Request to Withdraw as attorney or agent of record under 37 C.F.R. § 1.36(b), filed April 18, 2007.

The request is **NOT APPROVED**.

A grantable request to withdraw as attorney/agent of record must be signed by every attorney/agent seeking to withdraw or contain a clear indication that one attorney is signing on behalf of another/others. A request to withdraw will not be approved unless at least 30 (thirty) days would remain between the date of approval and the later of the expiration date of a time to file a response or the expiration date of the maximum time period which can be extended under 37 C.F.R. § 1.136(a).

The request cannot be approved because no reasons for withdrawal have been provided. The Office cannot, at this time, determine whether practitioner's request is one of the mandatory or permissive reasons enumerated in 37 CFR 10.40. Any subsequent requests must include reasons for withdrawal. Please note that there is a space provided for on PTO/SB/83 (Request to Withdraw as Attorney or Agent) to supply practitioner's reasons.

A courtesy copy of this decision is being mailed to the first named signing inventor. A courtesy copy is being mailed to the address noted in the request. If the attorneys with this firm desire to receive future communications concerning this application, the proper power of attorney documents should be submitted.

There are no outstanding Office actions at this time.

All future communications from the Office will continue to be directed to the above-listed address until otherwise notified by applicant.

Telephone inquiries concerning this decision should be directed to Kimberly Inabinet at 571-272- 4618.

Kimberly Inabinet

Kimberly Inabinet
Petitions Examiner
Office of Petitions

cc: Mark Shuster
19115 Prospect Ridge Lane
Houston, TX 77094

cc: Todd Mattingly
King & Spalding, LLP
1100 Louisiana Street, Suite 4000
Houston, TX 77002

UNITED STATES PATENT AND TRADEMARK OFFICE

UNITED STATES DEPARTMENT OF COMMERCE
United States Patent and Trademark Office
Address: COMMISSIONER FOR PATENTS
P.O. Box 1450
Alexandria, Virginia 22313-1450
www.uspto.gov

Conley Rose, P.C
P.O. Box 3267
Houston, TX 77253-3267

Mail Date: 04/21/2010

| | | |
|---|---|---|
| **Applicant** | : Mark Shuster | : DECISION ON REQUEST FOR |
| **Patent Number** | : 7571774 | : RECALCULATION of PATENT |
| **Issue Date** | : 08/11/2009 | : TERM ADJUSTMENT IN VIEW |
| **Appliction No** | : 10/528,499 | : OF WYETH |
| **Filed** | : 11/08/2005 | : |
| | | : |

The Patentee's Request for Recalculation is **DISMISSED.**

This Request is deemed ineligible for consideration for one or more of the following reasons:

(A). The patent for which PTA recalculation is requested is either a design or reissue application or is a reexamination proceeding;

(B). The patent for which PTA recalculation is requested resulted from a utility or plant application filed under 35 USC 111(a) before May 29, 2000 and no CPA filed in the application on/after May 29, 2000;

(C). The patent for which PTA recalculation is requested resulted from an international application in which the international filing date was before May 29, 2000 and no CPA filed in the application on/after May 29, 2000;

(D). The patent for which PTA recalculation is requested issued on/after March 2, 2010;

(E). The Request for Recalculation was filed more than 180 days after the grant date of the patent and the request was not filed within two months of a dismissal of a request for reconsideration of the of the patent term under 37 CFR 1.705(d);

(F). The Request for Recalculation is not solely limited to USPTO pre-Wyeth interpretation of 35 U.S.C. 154(b)(2)(A);

or

(G). A civil action was filed pursuant to 35 U.S.C. 154(b)(4)(A)concerning the same patent at issue in this request.

Patentee may file a reply to this decision dismissing the Request for Recalculation. Patentee must file such reply within one month or thirty days, whichever is longer, of the mail date of the decision dismissing the Request for Recalculation. No fee is required if patentee is asserting in the reply that the dismissal for ineligibility is improper.

Patentee should use document code PET.OP if electronically filing a reply to this dismissal. If the USPTO finds that the request was improperly deemed ineligible, the USPTO will mail applicant a recalculation determination.

Patentee should be aware that in order to preserve the right to review in the United States District Court for the District of Columbia of the USPTO patent term adjustment determination, patentee must ensure that he or she also take the steps required under 35 U.S.C. 154(b)(4)(A). Nothing in the request for recalculation should be construed as providing an alternative time frame for commencing a civil action under 35 U.S.C. 154 (b)(4)(A).

Any questions concerning this decision should be directed to the Office of Patent Legal Administration at 571-272-7702.

UNITED STATES PATENT AND TRADEMARK OFFICE

UNITED STATES DEPARTMENT OF COMMERCE
United States Patent and Trademark Office
Address: COMMISSIONER FOR PATENTS
P.O. Box 1450
Alexandria, Virginia 22313-1450
www.uspto.gov

Oppedahl Patent Law Firm LLC
P O Box 5940
Dillon, CO 80435-5940

Mail Date: 04/20/2010

| | | |
|---|---|---|
| **Applicant** | : Victor Marten | : DECISION ON REQUEST FOR |
| **Patent Number** | : 7580030 | : RECALCULATION of PATENT |
| **Issue Date** | : 08/25/2009 | : TERM ADJUSTMENT IN VIEW |
| **Appliction No** | : 10/528,512 | : OF WYETH AND NOTICE OF INTENT TO |
| **Filed** | : 03/18/2005 | : ISSUE CERTIFICATE OF CORRECTION |
| | | : |

The Request for Recalculation is **GRANTED** to the extent indicated.

The patent term adjustment has been determined to be **645** days. The USPTO will *sua sponte* issue a certificate of correction reflecting the amount of PTA days determined by the recalculation.

Prior to the issuance of the certificate of correction, the USPTO will afford patentee an opportunity to be heard and request reconsideration. Accordingly, patentee has **one month or thirty (30) days**, whichever is longer, to file a request for reconsideration of this patent term adjustment calculation. See 35 U.S.C. 154(b)(3)(B)(ii) and 37 CFR 1.322(a)(4). No extensions of time will be granted under 37 CFR 1.136.

Patentee should use document code PET.OP if electronically filing a request for reconsideration of this patent term adjustment calculation. The patentee must also include the information required by 37 CFR 1.705(b)(2) and the fee required by 37 CFR 1.18(e). If patentee does not file a timely request for reconsideration of this patent term adjustment calculation including the information required by 37 CFR 1.705(b)(2) and the fee required by 37 CFR 1.18(e), the USPTO will issue a certificate of correction reflecting the PTA determination noted above.

Patentee should be aware that in order to preserve the right to review in the United States District Court for the District of Columbia of the USPTO patent term adjustment determination, patentee must ensure that he or she also take the steps required under 35 U.S.C. 154(b)(4)(A) in a timely manner. Nothing in the request for recalculation should be construed as providing an alternative time frame for commencing a civil action under 35 U.S.C. 154(b)(4)(A).

Any questions concerning this decision should be directed to the Office of Patent Legal Administration at 571-272-7702.

#7

UNITED STATES PATENT AND TRADEMARK OFFICE

05 JAN 2006

Commissioner for Patents
United States Patent and Trademark Office
P.O. Box 1450
Alexandria, VA 22313-1450
www.uspto.gov

Gary M. Cohen
Strafford Building Number Three
125 Strafford Avenue, Suite 300
Wayne, PA 19087-3318

| | |
|---|---|
| In re Application of:<br>KIBBLEWHITE, Ian, E., et al.<br>U.S. Application No.: 10/528,515<br>PCT No.: PCT/US2003/029302<br>International Filing Date: 19 September 2003<br>Priority Date: 19 September 2002<br>Atty Docket No.: LOAD2 US<br>For: THREAD FORMING FASTENERS FOR ULTRASONIC LOAD MEASUREMENT AND CONTROL | DECISION ON PETITION UNDER 37 CFR 1.78(a)(3) AND UNDER 37 CFR (a)(6) |

This is a decision on the "Petition Under 37 CFR 1.78(a)(3)" filed 31 October 2005, treated herein under 37 CFR 1.78(a)(3) and (a)(6). The petition seeks acceptance of an unintentionally delayed claim under 35 U.S.C. §§ 120, 365(c), and 119(e) for the benefit of the prior filed applications set forth in the concurrently filed amendment.

The petitions are **GRANTED**.

The present nonprovisional application was filed after November 29, 2000, and the claim herein for the benefit of priority to the prior filed nonprovisional and provisional applications is submitted after the expiration of the period specified in 37 CFR 1.78(a)(2)(ii) and 1.78(a)(5)(ii). Therefore this is a proper petition under 37 CFR 1.78(a)(3) and 1.78(a)(6).

A petition for acceptance of a claim for late priority under 37 CFR 1.78(a)(3) and (a)(6) is only applicable to those applications filed on or after November 29, 2000. Further, the petition is appropriate only after the expiration of the period specified in 37 CFR 1.78(a)(2)(ii) and 1.78(a)(5)(ii). In addition, the petition under 37 CFR 1.78(a)(3) and 1.78(a)(6) must be accompanied by:

(1) the reference to the prior-filed applications, as required by 35 U.S.C. 120 and 119(e) and 37 CFR 1.78(a)(2)(i) and 1.78(a)(5)(i), unless previously submitted;
(2) the surcharge set forth in 37 CFR 1.17(t);
(3) A statement that the entire delay between the date the claim was due under 37 CFR 1.78(a)(2)(ii) and 1.78(a)(5)(ii) and the date the claim was filed was unintentional.

The present petition complies with the requirements for a grantable petition under 37 CFR 1.78(a)(3) and 1.78(a)(6) in that: (1) a reference to the prior-filed applications has been included in an amendment to the first sentence of the specification following the title, as provided by 37

CFR 1.78(a)(2)(iii) and 1.78(a)(5)(iii); (2) the surcharge fee required by 37 CFR 1.17(t) has been submitted; and (3) the petition includes a proper statement of unintentional delay. Accordingly, having found that the petition for acceptance of the unintentionally delayed claim for the benefit of priority under 35 U.S.C. 120 and 119(e) to the prior filed applications satisfies the conditions of 37 CFR 1.78(a)(3) and 1.78(a)(6), the petition is granted.

***The granting of the petition to accept the delayed benefit claim to the prior-filed applications under 37 CFR 1.78(a)(3) and 1.78(a)(6) should <u>not</u> be construed as meaning that this application is entitled to the benefit of the filing date of the prior-filed applications. In order for this application to be entitled to the benefit of the prior filed applications, all other requirements under 35 U.S.C. 120 and 365(c) and 37 CFR 1.78(a)(1) and (a)(2) and under 35 U.S.C. 119(e) and 37 CFR 1.78(a)(4) and (a)(5) must be met. Similarly, the fact that the Filing Receipt will include the prior-filed applications should not be construed as meaning that applicant is entitled to the claim for benefit of priority to the prior filed applications noted thereon. Accordingly, the examiner will, in due course, consider this benefit claim and determine whether this application is entitled to the benefit of the earlier filing date.***

Any questions concerning this matter may be directed to Richard M. Ross at (571) 272-3296.

This application is being forwarded to the National Stage Processing Branch of the Office Of PCT Operations for further processing in accordance with this decision, including the processing of applicant's response to the Notification Of Missing Requirements filed 26 October 2005 and for updating USPTO records to include the prior-filed applications referred to in the present petition.

Boris Milef
Legal Examiner
Office Of PCT Legal Administration

UNITED STATES PATENT AND TRADEMARK OFFICE

UNITED STATES DEPARTMENT OF COMMERCE
United States Patent and Trademark Office
Address: COMMISSIONER FOR PATENTS
P.O. Box 1450
Alexandria, Virginia 22313-1450
www.uspto.gov

ALSTON & BIRD LLP
BANK OF AMERICA PLAZA
101 SOUTH TRYON STREET, SUITE 4000
CHARLOTTE, NC 28280-4000

Mail Date: 04/21/2010

| | | |
|---|---|---|
| **Applicant** | : Hee-Jung Ahn | : DECISION ON REQUEST FOR |
| **Patent Number** | : 7580864 | : RECALCULATION of PATENT |
| **Issue Date** | : 08/25/2009 | : TERM ADJUSTMENT IN VIEW |
| **Appliction No** | : 10/528,528 | : OF WYETH AND NOTICE OF INTENT TO |
| **Filed** | : 03/18/2005 | : ISSUE CERTIFICATE OF CORRECTION |
| | | : |

The Request for Recalculation is **GRANTED** to the extent indicated.

The patent term adjustment has been determined to be **610** days. The USPTO will *sua sponte* issue a certificate of correction reflecting the amount of PTA days determined by the recalculation.

Prior to the issuance of the certificate of correction, the USPTO will afford patentee an opportunity to be heard and request reconsideration. Accordingly, patentee has **one month or thirty (30) days**, whichever is longer, to file a request for reconsideration of this patent term adjustment calculation. See 35 U.S.C. 154(b)(3)(B)(ii) and 37 CFR 1.322(a)(4). No extensions of time will be granted under 37 CFR 1.136.

Patentee should use document code PET.OP if electronically filing a request for reconsideration of this patent term adjustment calculation. The patentee must also include the information required by 37 CFR 1.705(b)(2) and the fee required by 37 CFR 1.18(e). If patentee does not file a timely request for reconsideration of this patent term adjustment calculation including the information required by 37 CFR 1.705(b)(2) and the fee required by 37 CFR 1.18(e), the USPTO will issue a certificate of correction reflecting the PTA determination noted above.

Patentee should be aware that in order to preserve the right to review in the United States District Court for the District of Columbia of the USPTO patent term adjustment determination, patentee must ensure that he or she also take the steps required under 35 U.S.C. 154(b)(4)(A) in a timely manner. Nothing in the request for recalculation should be construed as providing an alternative time frame for commencing a civil action under 35 U.S.C. 154(b)(4)(A).

Any questions concerning this decision should be directed to the Office of Patent Legal Administration at 571-272-7702.

27 SEP 2005

UNITED STATES PATENT and TRADEMARK OFFICE

COMMISSIONER FOR PATENTS
UNITED STATES PATENT AND TRADEMARK OFFICE
P.O BOX 1450
ALEXANDRIA, VA 22313-1450
www.uspto.gov

Kurt G. Briscoe
Norris McLaughlin & Marcus, P.A.
875 Third Avenue- 18th Floor
New York, NY 10022

| | |
|---|---|
| In re Application of | DECISION ON |
| Tobias REISS-SCMIDT | |
| Application No.: 10/538,034 | |
| PCT No.: PCT/EP02/14376 | |
| Int. Filing Date: 17 December 2002 | PETITION UNDER |
| Priority Date: 21 January 2002 | |
| Attorney's Docket No.: NA | |
| For: POLLEN OR INSECT SCREEN FOR | |
| ... OR SIMILAR | 37 CFR 1.137(b) |

This decision is in response to applicant's "Petition For Revival Of An International Application For Patent Designating The U.S. Abandoned Unintentionally Under 37 CFR 1.137(b)," filed on 06 September 2005.

## BACKGROUND

On 17 December 2002, this international application was filed, claiming an earliest priority date of 21 January 2002.

The deadline for paying the basic national fee in the United States under 35 U.S.C. 371 and 37 CFR 1.495 was 21 July 2004. This international application became abandoned with respect to the United States at midnight on 21 July 2004 for failure to pay the required basic national fee.

On 06 September 2005, applicants filed the instant petition under 37 CFR 1.137(b) and Transmittal letter for entry into the national stage in the United States, which was accompanied by the basic national fee and the petition fee.

## DISCUSSION

A grantable petition to revive an abandoned application under 37 CFR 1.137(b) must be accompanied by (1) the required reply, unless previously filed. In a nonprovisional application abandoned for failure to prosecute, the required reply may be met by the filing of a continuing application; (2) the petition fee as set forth in § 1.17(m); and (3) a statement that the entire delay in filing the required reply from the due date for the reply until the filing of a grantable petition pursuant to this paragraph was unintentional. The Commissioner may require additional

information where there is a question whether the delay was unintentional; and (4) any terminal disclaimer (and fee as set forth in § 1.20 (d)) required pursuant to paragraph (c) of this section.

Petitioner has provided: (1) the proper reply by submitting the basic national filing fee, (2) the petition fee set forth in §1.17(m) and (3) the proper statement under 137(b)(3). In this application, no terminal disclaimer is required.

Accordingly, the petition is deemed to satisfy requirements (1), (2), (3), and (4) under 37 CFR 1.137(b).

**DECISION**

The petition under 37 CFR 1.137(b) is **GRANTED**.

This application is being returned to the United States Designated/Elected Office (DO/EO/US) for continued processing.

Rafael Bacares
PCT Legal Examiner
PCT Legal Office
Telephone: (571) 272-3276
Facsimile: (571) 273-0459

UNITED STATES PATENT AND TRADEMARK OFFICE

Commissioner for Patents
United States Patent and Trademark Office
P.O. Box 1450
Alexandria, VA 22313-1450
www.uspto.gov

**FITCH EVEN TABIN AND FLANNERY**
**120 SOUTH LA SALLE STREET, SUITE 1600**
**CHICAGO, IL 60603-3406**

COPY MAILED

APR 0 6 2007

OFFICE OF PETITIONS

| | | |
|---|---|---|
| In re Application of | : | |
| Garry G. **FRANCE** | : | |
| Application No. 10/528,549 | : | DECISION ON PETITION |
| Filed: March 21, 2005 | : | TO WITHDRAW |
| Attorney Docket No. 85099 | : | FROM RECORD |
| | : | |

This is a decision on the Request to Withdraw as attorney or agent of record under 37 C.F.R. § 1.36(b), filed October 11, 2006.

The request is **APPROVED**.

A grantable request to withdraw as attorney/agent of record must be signed by every attorney/agent seeking to withdraw or contain a clear indication that one attorney is signing on behalf of another/others. A request to withdraw will not be approved unless at least 30 (thirty) days would remain between the date of approval and the later of the expiration date of a time to file a response or the expiration date of the maximum time period which can be extended under 37 C.F.R. § 1.136(a).

The request was signed by Scott J. Menghini on behalf of all attorneys of record. All attorneys/agents associated have been withdrawn. Applicant is reminded that there is no attorney of record at this time.

The request to change the correspondence of record is not acceptable as the requested correspondence address is not that of: (1) the first named signing inventor; or (2) an intervening assignee of the entire interest under 37 C.F.R 3.71. All future communications from the Office will be directed to the first named signing inventor at the first copied address below until otherwise properly notified by the applicant.

Telephone inquiries concerning this decision should be directed to the undersigned at 571-272-7253.

Monica A. Graves
Petitions Examiner
Office of Petitions

cc: **GARRY G. FRANCE**
**7 MAURENE COURT**
**GLENELLA, MACKAY**
**QUEENSLAND, AUSTRALIA 4740**

cc: **BIOTECHNOLOGY LAW GROUP**
**527 N. HIGHWAY 101, SUITE E**
**BOLANA BEACH, CA 92075**

UNITED STATES PATENT AND TRADEMARK OFFICE

UNITED STATES DEPARTMENT OF COMMERCE
United States Patent and Trademark Office
Address: COMMISSIONER FOR PATENTS
P.O. Box 1450
Alexandria, Virginia 22313-1450
www.uspto.gov

SCHWEGMAN, LUNDBERG & WOESSNER, P.A.
P.O. BOX 2938
MINNEAPOLIS, MN 55402

Mail Date: 05/24/2010

| | | |
|---|---|---|
| **Applicant** | : Dale L Boger | : DECISION ON REQUEST FOR |
| **Patent Number** | : 7662971 | : RECALCULATION of PATENT |
| **Issue Date** | : 02/16/2010 | : TERM ADJUSTMENT IN VIEW |
| **Application No** | : 10/528,552 | : OF WYETH AND NOTICE OF INTENT TO |
| **Filed** | : 08/23/2005 | : ISSUE CERTIFICATE OF CORRECTION |
| | | : |

The Request for Recalculation is **GRANTED** to the extent indicated.

The patent term adjustment has been determined to be **1080** days. The USPTO will *sua sponte* issue a certificate of correction reflecting the amount of PTA days determined by the recalculation.

Prior to the issuance of the certificate of correction, the USPTO will afford patentee an opportunity to be heard and request reconsideration. Accordingly, patentee has **one month or thirty (30) days**, whichever is longer, to file a request for reconsideration of this patent term adjustment calculation. See 35 U.S.C. 154(b)(3)(B)(ii) and 37 CFR 1.322(a)(4). No extensions of time will be granted under 37 CFR 1.136.

Patentee should use document code PET.OP if electronically filing a request for reconsideration of this patent term adjustment calculation. The patentee must also include the information required by 37 CFR 1.705(b)(2) and the fee required by 37 CFR 1.18(e). If patentee does not file a timely request for reconsideration of this patent term adjustment calculation including the information required by 37 CFR 1.705(b)(2) and the fee required by 37 CFR 1.18(e), the USPTO will issue a certificate of correction reflecting the PTA determination noted above.

Patentee should be aware that in order to preserve the right to review in the United States District Court for the District of Columbia of the USPTO patent term adjustment determination, patentee must ensure that he or she also take the steps required under 35 U.S.C. 154(b)(4)(A) in a timely manner. Nothing in the request for recalculation should be construed as providing an alternative time frame for commencing a civil action under 35 U.S.C. 154(b)(4)(A).

Any questions concerning this decision should be directed to the Office of Patent Legal Administration at 571-272-7702.

UNITED STATES PATENT AND TRADEMARK OFFICE

Commissioner for Patents
United States Patent and Trademark Office
P.O. Box 1450
Alexandria, VA 22313-1450
www.uspto.gov

**FISH & RICHARDSON PC**
**P.O. BOX 1022**
**MINNEAPOLIS, MN 55440-1022**

**MAILED**

MAR 19 2010

**OFFICE OF PETITIONS**

In re Application of :
**Hayat SINDI** :
Application No. 10/528,554 :
Filed: August 17, 2005 :
Attorney Docket No. **19002-002US1** :
**SONEU/P29256**

DECISION GRANTING PETITION
UNDER 37 CFR 1.313(c)(2)

This is a decision on the petition under 37 CFR 1.313(c)(2), filed March 18, 2010, to withdraw the above-identified application from issue after payment of the issue fee.

The petition is **GRANTED**.

The above-identified application is withdrawn from issue for consideration of a submission under 37 CFR 1.114 (request for continued examination). *See* 37 CFR 1.313(c)(2).

***Petitioner is advised that the issue fee paid on February 18, 2010 cannot be refunded. If, however, this application is again allowed, petitioner may request that it be applied towards the issue fee required by the new Notice of Allowance.***[1]

Telephone inquiries should be directed to the undersigned at (571) 272-7253.

This application is being referred to Technology Center AU 1797 for processing of the request for continued examination under 37 CFR 1.114 and for consideration of the concurrently filed information disclosure statement.

/Monica A. Graves/
Petitions Examiner, Office of Petitions

---

[1] *The request to apply the issue fee to the new Notice may be satisfied by completing and returning the new Part B – Fee(s) Transmittal Form (along with any balance due at the time of submission). Petitioner is advised that the Issue Fee Transmittal Form* ***must*** *be completed and timely submitted to avoid abandonment of the application.*

UNITED STATES PATENT AND TRADEMARK OFFICE

Commissioner for Patents
United States Patent and Trademark Office
P.O. Box 1450
Alexandria, VA 22313-1450
www.uspto.gov

MILLEN, WHITE, ZELANO & BRANIGAN, P.C.
2200 CLARENDON BLVD.
SUITE 1400
ARLINGTON VA 22201

Mailed 3/22/07

| | |
|---|---|
| In re Application of:<br>Ulrich Speck et al<br>Serial No.: 10/528,577<br>Filed: March 21, 2005<br>Docket: WEICKM-44<br>Title: MEDICAL DEVICE FOR DISPENSING MEDICAMENTS | DECISION ON REQUEST FOR PETITION TO MAKE SPECIAL FOR NEW APPLICATION UNDER 37 C.F.R. § 1.102 & M.P.E.P. § 708.02 (VIII) |

This is a decision on the petition filed on Aug. 24, 2006 to make the above-identified application special under the accelerated examination procedure set forth in MPEP § 708.02(VIII) and in accordance with 37 C.F.R. § 1.102(d).

The petition to make the application special is **DISMISSED**.

In support of the petition, petitioner provides: a) the applicable fee; b) a statement that if an election must be made, applicant would agree to limit examination of this application to the article claims; c) a statement that a search has been made; d) an IDS; and e) a detailed discussion of the references.

For accelerated examination under MPEP § 708.02(VIII) in accordance with 37 C.F.R. § 1.102(d), a showing of the following is required: a) the applicable petition fee; b) all claims are directed to a single invention, or if the Office determines that all the claims presented are not obviously directed to a single invention, applicant will make an election without traverse; c) a statement that a pre-examination search was made, listing the field of search by class and subclass; d) a copy of each of the references deemed most closely related to the claimed subject matter; and e) a detailed discussion of the references pointing out with the particularity required by 37 CFR 1.111 (b) and (c), how the claimed subject matter is distinguishable over the references.

The requirements of MPEP § 708.02(VIII)(a-c) are considered to have been met. However, the petition does not meet the requirements of MPEP § 708.02(VIII)(d and e).

Regarding the requirement of MPEP § 708.02(VIII)(d), states that submission of one copy each of the references deemed most closely related to the subject matter encompassed by the claims if said references are not already of record. The IDS statements filed on Aug. 24, 2006 failed to include a copy of References B8, B9, B10 and B15.

Regarding the requirement of MPEP § 708.02(VIII)(e), 37 CFR § 1.111 (b) states "[a] general allegation that the claims define a patentable invention without specifically pointing out how the language of the claims patentably distinguishes them from the references does not comply with the requirements of this section." 37 CFR § 1.111 (c) states in part "the applicant or patent owner must clearly point out the patentable novelty which he or she thinks the claims present in view of the state of the art disclosed by the references cited or the objections made." The applicant provides a discussion of some of the references cited but does not point out the particular language that distinguishes the independent claims 1, 24 and 38, filed on Aug. 24, 2006, from these references. The applicant's general allegations that the invention is patentable over the references run contrary to 37 CFR § 1.111 (b), which does not allow for general allegations. Moreover, petitioner only described some of the references to the present invention. In particular, petitioner merely mentioned the US Patent documents US 5,370,614, US 6,918,927 and US 2004/0073284 in general terms but failed to provide a comparison between all 68 cited prior art documents with at least the independent claims. Each independent claim must be compared with *each* of the cited 68 references, and the patentable novelty in *each* independent claim relative to *each* reference must be clearly pointed out. Because the petition does not point out the specific language in each independent claim that distinguishes over each of the 68 references, the petition fails to meet the requirements of MPEP § 708.02(VIII)(e). For example, the applicant failed to explain any specific limitations in claims 1, 24 and 38 not shown or taught by the cited 68 patent documents and non-patent literature documents.

While Technology Center Directors may have granted petitions that do not comply with the detailed discussion requirement of the Accelerated Examination procedure, Technology Center Director decisions on petitions are not binding precedent of the Patent Examining Corps, and the application of an improper standard in certain cases does not require the Office to continue to apply the improper standard in all cases. *See* *In re The Boulevard Entertainment, Inc.*, 334 F.3d 1336, 1343, 67 USPQ2d 1475, 1480 (Fed. Cir. 2003).

For the above-mentioned reasons, the petition is dismissed. The application will, therefore, be taken up by the examiner for action in its regular turn.

Any request for reconsideration of this decision must be submitted within 2 (two) months of the date of this decision in order to be considered timely. Any request for reconsideration must provide a detailed discussion of each of the cited 68 references that clearly points out the specific language in each independent claim that distinguishes over the reference.

Any inquiry regarding this decision should be directed to Henry Yuen, Special Program Examiner, at (571) 272-4856.

Henry C. Yuen,
Special Program Examiner
Technology Center 3700

0 6 AUG 2008

UNITED STATES PATENT AND TRADEMARK OFFICE

Commissioner for Patents
United States Patent and Trademark Office
P.O. Box 1450
Alexandria, VA 22313-1450
www.uspto.gov

OLIFF & BERRIDGE, PLC
P.O. BOX 320850
ALEXANDRIA VA 22320-4850

| | |
|---|---|
| In re Application of<br>POIROT-CROUVEZIER<br>U.S. Application No.: 10/528,587<br>PCT No.: PCT/FR03/02881<br>Int. Filing Date: 01 October 2003<br>Priority Date: 11 October 2002<br>Attorney Docket No.: 123210<br>For: ELECTRONIC POWER SOURCE COMPRISING A FUEL CELL WITHOUT DISCHARGE OF MATTER TO THE OUTSIDE AND CONTROL PROCESS OF SUCH A POWER SOURCE | DECISION ON PETITION<br><br>UNDER 37 CFR 1.181 |

This decision is in response to applicant's status letter inquiry filed 20 June 2008 in the United States Patent and Trademark Office (USPTO) regarding previously filed requests for a corrected filing receipt. For the reasons discussed below the matter is being treated as a petition under 37 CFR 1.181. No petition fee is required.

## BACKGROUND

On 01 October 2003, applicant filed international application PCT/FR03/02881 which claimed priority of an earlier application filed 11 October 2002. A copy of the international application was communicated to the United States Patent and Trademark Office from the International Bureau on 22 April 2004. The deadline for payment of the basic national fee in the United States was to expire 30 months from the priority date, 11 April 2005.

On 21 March 2005, applicant filed a transmittal letter for entry into the national stage in the United States, which was accompanied by the requisite basic national fee as required by 35 U.S.C. 371(c)(1); a translation of the international application into English; an Application Data Sheet; a signed declaration of the inventor; an Information Disclosure Statement and a First Preliminary Amendment.

On 26 May 2005, applicant filed a second transmittal letter covering a power of attorney and assignee statement under 37 CFR 3.73(b).

On 06 June 2005, applicant was mailed a "Notice of Acceptance" (Form PCT/DO/EO/903) indicating a receipt date of 21 March 2005 for the 35 U.S.C. 371(c)(1), (c)(2) and (c)(4) requirements and a date of 26 May 2005 as the date of completion of all 35 U.S.C. 371 requirements. The official filing receipt indicated a filing date or 371 date of 21 March 2005.

On 20 June 2008, applicant filed the status letter discussed herein. It is noted that the application file contains numerous requests for corrected filing receipt and status inquires on this matter.

## DISCUSSION

Applicant is seeking a corrected 371 date of 26 May 2005. The request does not provide a reason for the requested change. However, it is presumed from an inspection of the transmittal letter filed 26 May 2005 that applicant is arguing that the executed declaration was filed on this date. The declaration in the application file is stamped with a USPTO date stamp of "21 MAR 2005." This appears to be the rationale for the assigning of 21 March 2005 on the official filing receipt. If applicant desires a 35 U.S.C. 371 date of 26 May 2005 applicant should provide the office with a stamped return postcard indicating a receipt date of 26 May 2005. It is possible that the declaration was incorrectly stamped.

A new Form PCT/DO/EO/903 is required in the case in that the 30 month deadline was 11 April 2005. Applicant did not check box three of the initial transmittal letter requesting an express national examination procedure. Therefore, if the declaration was filed on 21 March 2005, the date of completion of all 35 U.S.C. 371 requirements should be 11 April 2005. If the declaration was filed on 26 May 2005, both dates would be 26 May 2005. Once applicant has responded to this decision a corrected Form PCT/DO/EO/903 and filing receipt will be issued.

## CONCLUSION

For the reasons detailed above, applicant's petition under 37 CFR 1.181 is **DISMISSED**.

This application remains **ABANDONED**.

Any reconsideration on the merits of this petition must be filed within **TWO (2) MONTHS** from the mail date of this decision. Any reconsideration request should include a cover letter entitled "Renewed Petition Under 37 CFR 1.181." Extensions of time may be obtained under 37 CFR 1.136(a).

Any further correspondence with respect to this matter should be directed to Mail Stop PCT, Commissioner for Patents, Office of PCT Legal Administration, P.O. Box 1450, Alexandria, Virginia 22313-1450, with the contents of the letter marked to the attention of the Office of PCT Legal Administration.

Derek A. Putonen
Attorney Advisor
Office of PCT Legal Administration
Tel: (571) 272-3294
Fax: (571) 273-0459

UNITED STATES PATENT AND TRADEMARK OFFICE

2 4 FEB 2010

Commissioner for Patents
United States Patent and Trademark Office
P.O. Box 1450
Alexandria, VA 22313-1450
www.uspto.gov

OLIFF & BERRIDGE, PLC
P.O. BOX 320850
ALEXANDRIA VA 22320-4850

| | | |
|---|---|---|
| In re Application of | : | |
| POIROT-CROUVEZIER | : | |
| U.S. Application No.: 10/528,587 | : | DECISION ON PETITION |
| PCT No.: PCT/FR03/02881 | : | |
| Int. Filing Date: 01 October 2003 | : | UNDER 37 CFR 1.181 |
| Priority Date: 11 October 2002 | : | |
| Attorney Docket No.: 123210 | : | |
| For: ELECTRONIC POWER SOURCE COMPRISING A FUEL CELL WITHOUT DISCHARGE OF MATTER TO THE OUTSIDE AND CONTROL PROCESS OF SUCH A POWER SOURCE | : | |

This decision is in response to applicant's status letter inquiry filed 22 December 2009 in the United States Patent and Trademark Office (USPTO) regarding previously filed requests for a corrected filing receipt including a response to decision filed 06 October 2008. For the reasons discussed below the matter is being treated as a renewed petition under 37 CFR 1.181. No petition fee is required.

## BACKGROUND

On 06 August 2008, applicant was mailed a decision dismissing applicant's petition under 37 CFR 1.181 as to the completion date of the 35 U.S.C. 371 requirements. Applicant was afforded two months to file any request for reconsideration.

On 06 October 2008, applicant filed the response discussed herein.

## DISCUSSION

Applicant is seeking a corrected 371 date of 26 May 2005. The declaration in the application file is stamped with a USPTO date stamp of "21 MAR 2005." The best evidence of what was actually received by the Office is a postcard receipt containing a specific itemization of all the items being submitted. (See MPEP 503.) Here, applicant has provided a return postcard receipt which is stamped "OIPE MAY 26 2005 Patent & Trademark Office JC98." Among the items listed is "Dec." Thus, it is clear that applicant did provide the executed declaration on 26 May 2005, not 21 March 2005. In addition, a review of the declaration finds that it was executed on 18 May 2005. As such, it is proper to grant the petition under 37 CFR 1.181 to consider the declaration in this case filed on 26 May 2005.

## CONCLUSION

For the reasons detailed above, applicant's renewed petition under 37 CFR 1.181 is **GRANTED**.

This application is being returned to the Office of PCT Operations, National Stage Processing for the issuance of a new "Notice of Acceptance" (Form PCT/DO/EO/903) and official filing receipt showing a date of receipt of 35 U.S.C. 371 (c)(1), (c)(2) and (c)(4) requirements and date of completion of all 35 U.S.C. 371 requirements as **26 May 2005**.

Derek A. Putonen
Attorney Advisor
Office of PCT Legal Administration
Tel: (571) 272-3294

UNITED STATES PATENT AND TRADEMARK OFFICE

Commissioner for Patents
United States Patent and Trademark Office
P.O. Box 1450
Alexandria, VA 22313-1450
www.uspto.gov

26 OCT 2006

GLAXOSMITHKLINE
Corporate Intellectual Property, MAI B475
Five Moore Dr., PO Box 13398
Research Triangle Park NC 27709-3398

| | |
|---|---|
| In re Application of<br>EATHERTON et al.<br>Application No. 10/528,592<br>PCT No.: PCT/EP03/10935<br>Int. Filing Date: 25 September 2003<br>Priority Date: 27 September 2002<br>Attorney Docket No.: P33117USW<br>For: PYRIDINE DERIVATIVES AS CB2 RECEPTOR MODULATORS | DECISION ON PETITION UNDER 37 CFR 1.181 |

This decision is in response to applicant's "Petition for Withdrawal of Abandonment under 37 CFR 1.181" filed in the Patent and Trademark Office (PTO) on 17 August 2006. No petition fee is required.

## BACKGROUND

On 25 September 2003, applicant filed international application no. PCT/EP03/10935 which claimed a priority date of 27 September 2002. A copy of the international application was communicated to the United States Patent and Trademark Office from the International Bureau on 08 April 2004. Pursuant to 37 CFR 1.495, the thirty-month period for paying the basic national fee in the United States expired at midnight on 27 March 2005.

On 21 March 2005, applicant filed a transmittal letter for entry into the national stage in the United States which was accompanied by, inter alia,: the basic national fee; a copy of the international application; and a preliminary amendment.

On 17 November 2005, the United Stated Designated/Elected Office mailed a Notification of Missing Requirements under 35 U.S.C. 371 (Form PCT/DO/EO/905) indicating that an oath or declaration in compliance with 37 CFR 1.497(a) and (b) must be filed. The notification set a two-month time limit in which to respond.

On 04 August 2006, the United States Designated/Elected Office (DO/EO/US) mailed a Notification of Abandonment indicating that the application was abandoned for failure to respond to the Notification of Missing Requirements mailed 17 November 2005.

On 17 August 2006, applicants filed the petition considered herein. The petition requests withdrawal of the holding of abandonment, stating that a response to the Notification Of Missing Requirements was timely filed via facsimile on 08 December 2005.

## DISCUSSION

The present petition is accompanied by a document entitled "Response To Notification Of Missing Requirements Under 35 U.S.C. 371" that references an attached declaration, contains the authorization to charge Deposit Account No. 07-1392 the required surcharge, and bears a "Certificate of Transmission by Facsimile" dated 08 December 2005. The Certificate of Mailing, executed by Valerie L. Phillips, states that the accompanying materials were transmitted to the USPTO by facsimile. The petition also includes a copy of an executed declaration, and the confirmation report from applicants' facsimile machine.

The application file does not contain the materials purportedly filed by facsimile on 08 December 2005. In order to confirm the 08 December 2005 filing of the materials accompanying the present petition, applicants must satisfy the requirements set forth in 37 CFR 1.8(b), which states the following:

> In the event that correspondence is considered timely filed by being mailed or transmitted in accordance with paragraph (a) of this section, but not received in the U.S. Patent and Trademark Office after a reasonable amount of time has elapsed from the time of mailing or transmitting of the correspondence, or after the application is held to be abandoned, or after the proceeding is dismissed, terminated, or decided with prejudice, the correspondence will be considered timely if the party who forwarded such correspondence:
>
> (1) Informs the Office of the previous mailing or transmission of the correspondence promptly after becoming aware that the Office has no evidence of receipt of the correspondence;
>
> (2) Supplies an additional copy of the previously mailed or transmitted correspondence and certificate; and
>
> (3) Includes a statement which attests on a personal knowledge basis or to the satisfaction of the Director to the previous timely mailing or transmission. If the correspondence was sent by facsimile transmission, a copy of the sending unit's report confirming transmission may be used to support this statement.

Referring to the statement required by 37 CFR 1.8(b)(3), MPEP § 512 states the following: "If the person signing the statement did not sign the certificate of mailing, then the person signing the statement should explain how they have firsthand knowledge of the previous timely mailing or transmission."

The present petition, which is signed by J. Scott Young, states that the attached materials were submitted by facsimile on 08 December 2005. However, Mr. Young is not the person who executed the Certificate of Transmission, and he does not state "how he has firsthand knowledge of the previous mailing or transmission" as required by MPEP § 512; the petition does not include a confirming statement from Valerie L. Phillips (the person who executed the Certificate Of Mailing on the response materials). Based on the above, the present petition does not satisfy the requirement of 37 CFR 1.8(b)(3).

## CONCLUSION

Applicants' petition to withdraw the holding of abandonment is **DISMISSED** without prejudice.

The application remains **ABANDONED**.

Any request for reconsideration must be submitted within **TWO (2) MONTHS** of the mail date of the present decision and must include the materials required to satisfy 37 CFR 1.8(b)(3), as discussed above.

Any further correspondence with respect to this matter should be addressed to the Mail Stop PCT, Commissioner for Patents, P.O. Box 1450, Alexandria, Virginia 22313-1450, with the contents of the letter marked to the attention of the Office of PCT Legal Administration.

Anthony Smith

Anthony Smith
Attorney-Advisor
Office of PCT Legal Administration
Telephone: (571) 272-3298
Facsimile: (571) 273-0459

UNITED STATES PATENT AND TRADEMARK OFFICE

Commissioner for Patents
United States Patent and Trademark Office
P.O. Box 1450
Alexandria, VA 22313-1450
www.uspto.gov

17 NOV 2006

GLAXOSMITHKLINE
Corporate Intellectual Property, MAI B475
Five Moore Dr., PO Box 13398
Research Triangle Park NC 27709-3398

| | |
|---|---|
| In re Application of<br>EATHERTON et al.<br>Application No. 10/528,592<br>PCT No.: PCT/EP03/10935<br>Int. Filing Date: 25 September 2003<br>Priority Date: 27 September 2002<br>Attorney Docket No.: P33117USW<br>For: PYRIDINE DERIVATIVES AS CB2 RECEPTOR MODULATORS | DECISION ON PETITION UNDER 37 CFR 1.181 |

This decision is issued in response to applicants' "Request for Reconsideration of Petition for Withdrawal of Abandonment under 37 CFR 1.181(a)" filed in the Patent and Trademark Office (PTO) on 14 November 2006. No petition fee is required.

## BACKGROUND

On 25 September 2003, applicants filed international application no. PCT/EP03/10935 which claimed a priority date of 27 September 2002. A copy of the international application was communicated to the United States Patent and Trademark Office from the International Bureau on 08 April 2004. Pursuant to 37 CFR 1.495, the thirty-month period for paying the basic national fee in the United States expired at midnight on 27 March 2005.

On 21 March 2005, applicants filed a transmittal letter for entry into the national stage in the United States which was accompanied by, inter alia,: the basic national fee; a copy of the international application; and a preliminary amendment.

On 17 November 2005, the United Stated Designated/Elected Office mailed a Notification of Missing Requirements under 35 U.S.C. 371 (Form PCT/DO/EO/905) indicating that an oath or declaration in compliance with 37 CFR 1.497(a) and (b) must be filed. The notification set a two-month time limit in which to respond.

On 04 August 2006, the United States Designated/Elected Office (DO/EO/US) mailed a Notification of Abandonment indicating that the application was abandoned for

failure to respond to the Notification of Missing Requirements mailed 17 November 2005.

On 17 August 2006, applicants filed a "Petition for Withdrawal of Abandonment under 37 CFR 1.181." (The petition included a copy of the declaration purportedly filed on 08 December 2005.) In a decision dated 26 October 2006, applicants' petition under 37 CFR 1.181 was dismissed without prejudice.

On 14 November 2006, applicants filed "Request for Reconsideration of Petition for Withdrawal of Abandonment under 37 CFR 1.181(a)." The petition requests withdrawal of the holding of abandonment, stating that a response to the Notification Of Missing Requirements was timely filed via facsimile on 08 December 2005.

## DISCUSSION

The present petition is accompanied by a document entitled "Response To Notification Of Missing Requirements Under 35 U.S.C. 371" that references an attached declaration, contains the authorization to charge Deposit Account No. 07-1392 the required surcharge, and bears a "Certificate of Transmission by Facsimile" dated 08 December 2005. The Certificate of Mailing, executed by Valerie L. Phillips, states that the accompanying materials were transmitted to the USPTO by facsimile. The petition also includes a copy of an executed declaration, and the confirmation report from applicants' facsimile machine.

The application file does not contain the materials purportedly filed by facsimile on 08 December 2005. In order to confirm the 08 December 2005 filing of the materials accompanying the present petition, applicants must satisfy the requirements set forth in 37 CFR 1.8(b), which states the following:

> In the event that correspondence is considered timely filed by being mailed or transmitted in accordance with paragraph (a) of this section, but not received in the U.S. Patent and Trademark Office after a reasonable amount of time has elapsed from the time of mailing or transmitting of the correspondence, or after the application is held to be abandoned, or after the proceeding is dismissed, terminated, or decided with prejudice, the correspondence will be considered timely if the party who forwarded such correspondence:
>
> (1) Informs the Office of the previous mailing or transmission of the correspondence promptly after becoming aware that the Office has no evidence of receipt of the correspondence;
>
> (2) Supplies an additional copy of the previously mailed or transmitted correspondence and certificate; and
>
> (3) Includes a statement which attests on a personal knowledge basis or to the satisfaction of the Director to the

> previous timely mailing or transmission. If the correspondence was sent by facsimile transmission, a copy of the sending unit's report confirming transmission may be used to support this statement..

The evidence filed with the present petition is convincing that the 08 December 2005 response included a declaration with a certificate of facsimile transmission. Additionally, applicants have: (1) informed the Office of the previous mailing of the correspondence promptly after becoming aware that the Office did not receive the items transmitted on 08 December 2005, (2) supplied copies of the previously mailed correspondence; and (3) included a statement by Valerie Phillips which attests on a personal knowledge of the 08 December 2005 transmission. Additionally, petitioner has provided a copy of the sending unit 's report confirming transmission on 08 December 2005.

The declaration submitted on 17 August 2006 will be considered as a timely response to the Notification of Missing Requirements mailed 17 November 2005; however, the declaration will be given a receipt date of 17 August 2006. (See 37 CFR 1.8(a))

As the declaration was filed after 30 months from the priority date, the required surcharge of $130 under 37 CFR 1.492(h) will be charged to Deposit Account No. 07-1392.

Accordingly, it is considered appropriate to withdraw the holding of abandonment.

## CONCLUSION

As construed above, applicants' petition under 37 CFR 1.181 to withdraw the holding of abandonment is **GRANTED**. The Notification of Abandonment mailed on 04 August 2006 is hereby **VACATED**.

Deposit Account No. 07-1392 will be charged a $130.00 surcharge fee under 37 CFR 1.492(e) for supplying an oath or declaration later than 30 months from the earliest claimed priority date, as authorized.

The application has an international filing date of 25 September 2003 under 35 U.S.C. 363, and a 35 U.S.C. 371(c)(1), (c)(2), and (c)(4) date of **17 August 2006**.

This application is being forwarded to the National Stage Processing Branch of the International Division for further processing.

Anthony Smith
Attorney-Advisor
Office of PCT Legal Administration
Telephone: (571) 272-3298
Facsimile: (571) 273-0459

UNITED STATES PATENT AND TRADEMARK OFFICE

UNITED STATES DEPARTMENT OF COMMERCE
United States Patent and Trademark Office
Address: COMMISSIONER FOR PATENTS
P.O. Box 1450
Alexandria, Virginia 22313-1450
www.uspto.gov

Robert D. Shedd, Patent Operations
THOMSON Licensing LLC
P.O. Box 5312
Princeton, NJ 08543-5312

Mail Date: 04/21/2010

| | | |
|---|---|---|
| **Applicant** | : Marco Winter | : DECISION ON REQUEST FOR |
| **Patent Number** | : 7627791 | : RECALCULATION of PATENT |
| **Issue Date** | : 12/01/2009 | : TERM ADJUSTMENT IN VIEW |
| **Appliction No** | : 10/528,596 | : OF WYETH AND NOTICE OF INTENT TO |
| **Filed** | : 03/21/2005 | : ISSUE CERTIFICATE OF CORRECTION |
| | | : |

The Request for Recalculation is **GRANTED** to the extent indicated.

The patent term adjustment has been determined to be **869** days. The USPTO will *sua sponte* issue a certificate of correction reflecting the amount of PTA days determined by the recalculation.

Prior to the issuance of the certificate of correction, the USPTO will afford patentee an opportunity to be heard and request reconsideration. Accordingly, patentee has **one month or thirty (30) days**, whichever is longer, to file a request for reconsideration of this patent term adjustment calculation. See 35 U.S.C. 154(b)(3)(B)(ii) and 37 CFR 1.322(a)(4). No extensions of time will be granted under 37 CFR 1.136.

Patentee should use document code PET.OP if electronically filing a request for reconsideration of this patent term adjustment calculation. The patentee must also include the information required by 37 CFR 1.705(b)(2) and the fee required by 37 CFR 1.18(e). If patentee does not file a timely request for reconsideration of this patent term adjustment calculation including the information required by 37 CFR 1.705(b)(2) and the fee required by 37 CFR 1.18(e), the USPTO will issue a certificate of correction reflecting the PTA determination noted above.

Patentee should be aware that in order to preserve the right to review in the United States District Court for the District of Columbia of the USPTO patent term adjustment determination, patentee must ensure that he or she also take the steps required under 35 U.S.C. 154(b)(4)(A) in a timely manner. Nothing in the request for recalculation should be construed as providing an alternative time frame for commencing a civil action under 35 U.S.C. 154(b)(4)(A).

Any questions concerning this decision should be directed to the Office of Patent Legal Administration at 571-272-7702.

UNITED STATES PATENT AND TRADEMARK OFFICE

UNITED STATES DEPARTMENT OF COMMERCE
United States Patent and Trademark Office
Address: COMMISSIONER FOR PATENTS
P.O. Box 1450
Alexandria, Virginia 22313-1450
www.uspto.gov

Robert D. Shedd, Patent Operations
THOMSON Licensing LLC
P.O. Box 5312
Princeton, NJ 08543-5312

Mail Date: 04/21/2010

| | | |
|---|---|---|
| **Applicant** | : Olivier Trinchero | : DECISION ON REQUEST FOR |
| **Patent Number** | : 7605713 | : RECALCULATION of PATENT |
| **Issue Date** | : 10/20/2009 | : TERM ADJUSTMENT IN VIEW |
| **Appliction No** | : 10/528,597 | : OF WYETH AND NOTICE OF INTENT TO |
| **Filed** | : 03/21/2005 | : ISSUE CERTIFICATE OF CORRECTION |
| | | : |

The Request for Recalculation is **GRANTED** to the extent indicated.

The patent term adjustment has been determined to be **813** days. The USPTO will *sua sponte* issue a certificate of correction reflecting the amount of PTA days determined by the recalculation.

Prior to the issuance of the certificate of correction, the USPTO will afford patentee an opportunity to be heard and request reconsideration. Accordingly, patentee has **one month or thirty (30) days**, whichever is longer, to file a request for reconsideration of this patent term adjustment calculation. See 35 U.S.C. 154(b)(3)(B)(ii) and 37 CFR 1.322(a)(4). No extensions of time will be granted under 37 CFR 1.136.

Patentee should use document code PET.OP if electronically filing a request for reconsideration of this patent term adjustment calculation. The patentee must also include the information required by 37 CFR 1.705(b)(2) and the fee required by 37 CFR 1.18(e). If patentee does not file a timely request for reconsideration of this patent term adjustment calculation including the information required by 37 CFR 1.705(b)(2) and the fee required by 37 CFR 1.18(e), the USPTO will issue a certificate of correction reflecting the PTA determination noted above.

Patentee should be aware that in order to preserve the right to review in the United States District Court for the District of Columbia of the USPTO patent term adjustment determination, patentee must ensure that he or she also take the steps required under 35 U.S.C. 154(b)(4)(A) in a timely manner. Nothing in the request for recalculation should be construed as providing an alternative time frame for commencing a civil action under 35 U.S.C. 154(b)(4)(A).

Any questions concerning this decision should be directed to the Office of Patent Legal Administration at 571-272-7702.

UNITED STATES PATENT AND TRADEMARK OFFICE

Commissioner for Patents
United States Patent and Trademark Office
P.O. Box 1450
Alexandria, VA 22313-1450
www.uspto.gov

LAW OFFICES OF KARL HORMANN
86 SPARKS STREET
CAMBRIDGE, MA 02138

**COPY MAILED**

AUG 15 2006

**OFFICE OF PETITIONS**

In re Application of :
Christian Edelmann et al. :
Application No. 10/528,600 :
Filed: March 21, 2005 :
Attorney Docket Number: 050682-US :

ON PETITION

This is a decision on the "Submission under 37 CFR 1.8(b)" filed June 28, 2006 which is treated as a petition to withdraw the holding of abandonment under 37 CFR 1.181.

The petition under 37 CFR 1.181 is **GRANTED**.

The application was held abandoned on March 15, 2006 for failure to timely file a response to the non-Final Office Action mailed December 14, 2005. The instant petition preceded the Notice of Abandonment which was mailed July 3, 2006.

Petitioner asserts that a response in the form of an amendment was mailed March 11, 2006. Provided as proof is a copy of the response bearing a certificate of mail dated March 11, 2006.

A search of the application file and the USPTO records does not reveal receipt of the response, but in view of the evidence provided, the petition is compliant with 37 CFR 1.8(b) and accordingly, the abandonment is hereby withdrawn. No petition fee is necessary and none has been charged.

This matter will be referred to Technology Center 2858 for appropriate action on the response originally filed on March 11, 2006 and resubmitted with the instant petition on June 28, 2006.

Telephone inquiries concerning this matter may be directed to the undersigned Petitions Attorney at (571) 272-3212.

Patricia Faison-Ball

Patricia Faison-Ball
Senior Petitions Attorney
Office of Petitions

UNITED STATES PATENT AND TRADEMARK OFFICE

UNITED STATES DEPARTMENT OF COMMERCE
United States Patent and Trademark Office
Address: COMMISSIONER FOR PATENTS
P.O. Box 1450
Alexandria, Virginia 22313-1450
www.uspto.gov

LEYDIG VOIT & MAYER, LTD
TWO PRUDENTIAL PLAZA, SUITE 4900
180 NORTH STETSON AVENUE
CHICAGO, IL 60601-6731

Mail Date: 04/26/2010

| | | |
|---|---|---|
| **Applicant** | : Jeroen Anton Johan Leijten | : DECISION ON REQUEST FOR |
| **Patent Number** | : 7574583 | : RECALCULATION of PATENT |
| **Issue Date** | : 08/11/2009 | : TERM ADJUSTMENT IN VIEW |
| **Application No** | : 10/528,607 | : OF WYETH AND NOTICE OF INTENT TO |
| **Filed** | : 03/21/2005 | : ISSUE CERTIFICATE OF CORRECTION |
| | | : |

The Request for Recalculation is **GRANTED** to the extent indicated.

The patent term adjustment has been determined to be **93** days. The USPTO will *sua sponte* issue a certificate of correction reflecting the amount of PTA days determined by the recalculation.

Prior to the issuance of the certificate of correction, the USPTO will afford patentee an opportunity to be heard and request reconsideration. Accordingly, patentee has **one month or thirty (30) days**, whichever is longer, to file a request for reconsideration of this patent term adjustment calculation. See 35 U.S.C. 154(b)(3)(B)(ii) and 37 CFR 1.322(a)(4). No extensions of time will be granted under 37 CFR 1.136.

Patentee should use document code PET.OP if electronically filing a request for reconsideration of this patent term adjustment calculation. The patentee must also include the information required by 37 CFR 1.705(b)(2) and the fee required by 37 CFR 1.18(e). If patentee does not file a timely request for reconsideration of this patent term adjustment calculation including the information required by 37 CFR 1.705(b)(2) and the fee required by 37 CFR 1.18(e), the USPTO will issue a certificate of correction reflecting the PTA determination noted above.

Patentee should be aware that in order to preserve the right to review in the United States District Court for the District of Columbia of the USPTO patent term adjustment determination, patentee must ensure that he or she also take the steps required under 35 U.S.C. 154(b)(4)(A) in a timely manner. Nothing in the request for recalculation should be construed as providing an alternative time frame for commencing a civil action under 35 U.S.C. 154(b)(4)(A).

Any questions concerning this decision should be directed to the Office of Patent Legal Administration at 571-272-7702.

## SPE RESPONSE FOR CERTIFICATE OF CORRECTION

**DATE** : 10/16/09

**Paper No.:** —

**TO SPE OF** : ART UNIT 2874

**SUBJECT** : Request for Certificate of Correction for Appl. No.: 10/528608 Patent No.: 7274855 B2

Please respond to this request for a certificate of correction within 7 days.

**FOR IFW FILES:**

Please review the requested changes/corrections as shown in the **COCIN** document(s) in the IFW application image. No new matter should be introduced, nor should the scope or meaning of the claims be changed.

Please complete the response (see below) and forward the completed response to scanning using document code **COCX**.

**FOR PAPER FILES:**

Please review the requested changes/corrections as shown in the attached certificate of correction. Please complete this form (see below) and forward it with the file to:

**Certificates of Correction Branch (CofC)**
**Randolph Square – 9D10-A**
**Palm Location 7580**

Virginia Tolbert
**Certificates of Correction Branch**
571-272-0460

**Thank You For Your Assistance**

**The request for issuing the above-identified correction(s) is hereby:**
Note your decision on the appropriate box.

- ☒ **Approved** — **All** changes apply.
- ☐ **Approved in Part** — Specify below which changes **do not** apply.
- ☐ **Denied** — State the reasons for denial below.

**Comments:** The Request for Certificate of Correction is for the purpose of correcting errors which occurred during printing of the patent.

/UYEN-CHAU N. LE/ 2874

23 DEC 2005

UNITED STATES PATENT AND TRADEMARK OFFICE

Commissioner for Patents
United States Patent and Trademark Office
P.O. Box 1450
Alexandria, VA 22313-1450
www.uspto.gov

GLAXOSMITHKLINE
CORPORATE INTELLECTUAL PROPERTY, MAI B475
FIVE MOORE DR., PO BOX 13398
RESEARCH TRIANGLE PARK NC 27709-3398

| | | |
|---|---|---|
| In re Application of | : | |
| RICHARD HOWARD GREEN (deceased) | : | DECISION ON |
| Application No.: 10/528,613 | : | |
| PCT No.: PCT/EP03/10930 | : | PETITION |
| Int. Filing Date: 25 September 2003 | : | |
| Priority Date: 27 September 2002 | : | UNDER 37 CFR 1.42 |
| Attorney Docket no.: P33118US | : | |
| For: PYRIDINE DERIVATIVES AS CB2 | : | |
| RECEPTOR MODULATORS | : | |

This is a decision on a submission under 37 CFR 1.42, filed in the United States Patent and Trademark Office (USPTO) on 23 August 2005 in response to a Notification of Missing Requirements.

## BACKGROUND

On 12 March 2005, applicant filed a Transmittal Letter requesting entry into the national stage in the United States of America under 35 U.S.C. § 371. Filed with the Transmittal Letter was, *inter alia*, the requisite basic national fee.

In response to the Notification of Missing Requirements mailed on 28 October 2005, and to satisfy the requirement that an oath or declaration of the inventors be furnished, applicant filed a declaration that was signed by the co-inventors and by Jennifer Margaret Doughty, as executor on behalf of deceased co-inventor Richard Howard Green. The submission was treated as a request for status under 37 CFR 1.42.

## DISCUSSION

Pursuant to 37 CFR § 1.42, first sentence:

"In case of the death of the inventor, the legal representative (executor,

administrator, etc.) of the deceased inventor may make the necessary oath or declaration, and apply for and obtain a patent."

37 CFR 1.497(a)(3) requires that the declaration identify each inventor and the country of citizenship of each inventor. 37 CFR 1.497(b)(2) requires the declaration to state the relationship of the person (under 37 CFR 1.42) making the declaration for a deceased inventor. 37 CFR 1.497(b)(2) further states that, if the person signing the oath or declaration is the legal representative of a deceased inventor, the oath or declaration must state that the person is a legal representative and indicate the citizenship, residency and mailing address of the legal representative. The declaration must also state the citizenship, residency and last mailing address of the deceased inventor to comply with 37 CFR 1.497(a)(3).

The declaration submitted on 23 August 2005 is executed by the joint inventors as identified in the published international application and indicates their respective citizenship, residency and mailing address. With respect to the deceased inventor, however, the declaration only identifies "Jennifer Margaret Doughty" with the added notation "executor on of the estate of Richard Howard Green". Moreover, the declaration also does not identify the country of citizenship, residency and mailing address for both the executor (legal representative) and the deceased inventor.

Thus, the declaration is unacceptable because although the declaration identifies Jennifer Margaret Doughty, as executor or legal representative for deceased inventor Richard Howard Green, it does not clearly state the country of citizenship, former residency and mailing address of both the deceased inventor and the legal representative, as required for compliance with 37 CFR 1.497. See also 37 CFR 1.64. Accordingly, it is inappropriate, at this time, to accord the application status under 37 CFR 1.42.

Accordingly, it is inappropriate to accord the national stage application status under 37 CFR §1.42 at this time.

## CONCLUSION

For the above reasons, the request for status under 37 CFR 1.42 is **DISMISSED WITHOUT PREJUDICE.**

If reconsideration of the merits of the request for status under 37 CFR 1.42 is desired, applicant is required to correct the above-noted defects including the furnishing of an oath/declaration in compliance with 37 CFR 1.42 and 1.497(a) and (b) within TWO (2) MONTHS from the mail date of this Decision. Failure to respond will result in the abandonment of the application. Any reconsideration request should include a cover letter entitled "Renewed Submission Under 37 CFR 1.42."

Any further correspondence with respect to this matter should be addressed to the Mail Stop PCT, Commissioner for Patents, Office of PCT Legal Administration, P.O. Box 1450, Alexandria, Virginia 22313-1450, with the contents of the letter marked to the attention of the Office of PCT Legal Administration.

Cynthia M. Kratz
Attorney Advisor
PCT Legal Office

Telephone: (571) 272-3286
Fax: 571-273-0459

10 MAY 2006

#8

UNITED STATES PATENT AND TRADEMARK OFFICE

Commissioner for Patents
United States Patent and Trademark Office
P.O. Box 1450
Alexandria, VA 22313-1450
www.uspto.gov

GLAXOSMITHKLINE
CORPORATE INTELLECTUAL PROPERTY, MAI B475
FIVE MOORE DR., PO BOX 13398
RESEARCH TRIANGLE PARK NC 27709-3398

| | | |
|---|---|---|
| In re Application of | : | |
| RICHARD HOWARD GREEN (deceased) | : | DECISION ON |
| Application No.: 10/528,613 | : | |
| PCT No.: PCT/EP03/10930 | : | PETITION |
| Int. Filing Date: 25 September 2003 | : | |
| Priority Date: 27 September 2002 | : | UNDER 37 CFR 1.42 |
| Attorney Docket no.: P33118US | : | |
| For: PYRIDINE DERIVATIVES AS CB2 | : | |
| RECEPTOR MODULATORS | : | |

This is a decision on a renewed submission under 37 CFR 1.42, filed in the United States Patent and Trademark Office (USPTO) on 28 February 2006 in response to a Notification of Missing Requirements. Petitioner requests a one month extension of time, which is granted.

## BACKGROUND

On 12 March 2005, applicant filed a Transmittal Letter requesting entry into the national stage in the United States of America under 35 U.S.C. § 371. Filed with the Transmittal Letter was, *inter alia*, the requisite basic national fee.

In response to the Notification of Missing Requirements mailed on 28 October 2005, and to satisfy the requirement that an oath or declaration of the inventors be furnished, applicant filed a declaration that was signed by the co-inventors and by Jennifer Margaret Doughty, as executor on behalf of deceased co-inventor Richard Howard Green. The submission was treated as a request for status under 37 CFR 1.42.

On 23 December 2005, a decision dismissing the petition was mailed to applicant indicating that the declaration was unacceptable because it identified Jennifer Margaret Doughty, as executor or legal representative for deceased inventor Richard Howard Green but did not clearly state the country of citizenship, former residency and mailing address of both the deceased inventor and the legal representative, as required for compliance with 37 CFR 1.497.

On 28 February 2006, applicant submitted a renewed submission under 37 CFR 1.42 along with a newly executed declaration.

## DISCUSSION

The declarations submitted on 28 February 2006 are acceptable because the declarations identify the joint inventors and Jennifer Margaret Doughty, as executor or legal representative for deceased inventor Richard Howard Green. Further, the declarations state the country of citizenship, former residency and mailing address for all joint inventors, the deceased inventor and the legal representative. The declaration is in compliance with 37 CFR 1.497(a) and (b). Accordingly, it is appropriate to accord the national stage application status under 37 CFR §1.42.

## CONCLUSION

For the above reasons, the request for status under 37 CFR 1.42 is **GRANTED.**

The 35 U.S.C. 371(c)(1), (c)(2) and (c)(4) date is 28 February 2006.

Cynthia M. Kratz
Attorney Advisor
PCT Legal Office

Telephone: (571) 272-3286
Fax: 571-273-0459

26 SEP 2005

UNITED STATES PATENT AND TRADEMARK OFFICE

COMMISSIONER FOR PATENTS
UNITED STATES PATENT AND TRADEMARK OFFICE
P.O. BOX 1450
ALEXANDRIA, VA 22313-1450
www.uspto.gov

Abelman, Frayne& Schwab
666 Third Avenue, 10th Floor
New York, NY 10017-5621

| | | |
|---|---|---|
| In re Application of | : | |
| HIHI | : | |
| Application No.: 10/528,646 | : | |
| PCT No.: PCT/DZ2002/000002 | : | |
| Int. Filing Date: 18 November 2002 | : | DECISION |
| Priority Date: 21 September 2002 | : | |
| Atty. Docket No.: 206,923 | : | |
| For: METHOD OF INCREASING THE | : | |
| OUTPUT POWER OF PHOTO... | : | |

This is a decision on applicant's "PETITION FOR REVIVAL..." filed in the U.S. Patent and Trademark Office (USPTO) by facsimile transmission on 21 September 2005. The petition was accompanied by, *inter alia,* the requisite petition fee, the basic national fee, and a declaration of the inventor. The petition is **GRANTED** as discussed below.

The present application became abandoned as to the U.S. National Stage on 21 March 2005 for failure to pay the basic national filing fee prior to the expiration of 30 months from the priority date.

A review of the application file reveals that applicant has satisfied the requirements of 37 CFR 1.137(b), and that the application satisfies the requirements under 35 U.S.C. 371 for entry into the national stage in the United States. The requisite fees have been charged to counsel's deposit account as authorized in the petition.

The application has an international filing date of 15 April 2003, under 35 U.S.C. 363, and a 35 U.S.C. 371(c)(1), (2), and (4) date of **21 September 2005**.

This application is being forwarded to the National Stage Processing Branch of the International Division for further processing in accordance with this decision.

Richard R. Cole
PCT Legal Examiner
Office of PCT Legal Administration

(571) 272-3281
Fax: (571) 273-0459

#9

UNITED STATES PATENT AND TRADEMARK OFFICE

Commissioner for Patents
United States Patent and Trademark Office
P.O. Box 1450
Alexandria, VA 22313-1450
www.uspto.gov

15 FEB 2006

Andrew N. Parfomak
Norris McLaughlin & Marcus, PA
875 Third Avenue, 18th Floor
New York, NY 10022

| | | |
|---|---|---|
| In re Application of | : | |
| CORNELIUS, et al. | : | DECISION ON PETITION |
| U.S. Application No.: 10/528,707 | : | |
| PCT No.: PCT/GB03/04025 | : | UNDER 37 CFR 1.181 |
| Int. Filing Date: 19 September 2003 | : | |
| Priority Date: 26 September 2002 | : | |
| Atty Docket No.: 102792-436 (11134P1) | : | |
| For: ODOUR ABSORBING CLOTHES COVER | : | |

This decision is in response to applicant's "Response to Notification of Missing Requirements" filed 12 January 2006 in the United States Patent and Trademark Office (USPTO). The response is being treated as a petition under 37 CFR 1.181. No petition fee is required.

## BACKGROUND

On 19 September 2003, applicant filed international application PCT/GB03/04025, which claimed priority of an earlier application filed 26 September 2002. Pursuant to 37 CFR 1.495, the deadline for payment of the basic national fee in the United States was to expire 30 months from the priority date, 26 March 2005.

On 22 March 2005, applicant filed a transmittal letter for entry into the national stage in the United States, which was accompanied by the requisite basic national fee as required by 35 U.S.C. 371(c)(1); an Information Disclosure Statement; an Application Data Sheet; an unexecuted declaration and power of attorney and a First preliminary amendment.

On 08 December 2005, applicant was mailed a "NOTIFICATION OF MISSING REQUIREMENTS UNDER 35 U.S.C. 371" (Form PCT/DO/EO/905) informing applicant of the need to provide a signed oath or declaration of the inventors, in compliance with 37 CFR 1.497(a) and (b), identifying the application by the international application number and international filing date and provide payment of the surcharge for providing an oath or declaration later than thirty months from the priority date. In addition, applicant was advised that the unsigned declaration filed 22 March 2005 listed a third inventor, Edward Fu, who was not listed in the published international application.

On 12 January 2006, applicant filed the present petition under 37 CFR 1.181 which included a copy of a declaration purportedly filed on 02 June 2005.

## DISCUSSION

37 CFR 1.8(b) states:

In the event that correspondence is considered timely filed by being mailed or transmitted in accordance with paragraph (a) of this section, but not received in the Patent and Trademark Office, and the application is held to be abandoned or the proceeding is dismissed, terminated, or decided with prejudice the correspondence will be considered timely filed if the party who forwarded the correspondence:

(1) Informs the Office of the previous mailing or transmission of the correspondence promptly after becoming aware that the Office has no evidence of receipt of the correspondence;

(2) Supplies an additional copy of the previously mailed or transmitted correspondence and certificate; and

(3) Includes a statement which attests on a personal knowledge basis or to the satisfaction of the Commissioner to the previous timely mailing or transmission. If the correspondence was sent by facsimile transmission, a copy of the sending unit's report confirming transmission may be used to support this statement.

The present application did not go abandoned as the filing of 12 January 2006 was a timely response to the Form PCT/DO/EO/905 mailed 08 December 2005. The 37 CFR 1.8 language is included regarding the assigning of a 35 U.S.C. 371 date. 37 CFR 1.8(a) states that, "[T]he actual date of receipt will be used for all other purposes." As such, whether proceeding under 37 CFR 1.8 or accepting the present copy as a timely response to the Form PCT/DO/EO/905, the actual date of the receipt of the last 35 U.S.C. 371 requirement would be the same, 12 January 2006.

Regarding the listing of Mr. Fu on the previously filed, nonexecuted declaration, applicant is correct that since the document was not signed, the actual inventors have only executed a declaration which correctly lists the actual inventors and therefore no further showing nor explanation is required. A review of the document reveals that the filed declaration complies with 37 CFR 1.497(a)-(b) and that applicant has authorized the charging of all appropriate fees to Deposit Account No.: 14-1263. Therefore, all of the requirements of 35 U.S.C. 371 for entry into the national stage in the United States have now been satisfied.

## CONCLUSION

Applicant's petition under 37 CFR 1.181 is **GRANTED**.

This application will be given an international application filing date of 19 September 2003 and a date of **12 January 2006** under 35 U.S.C. 371(c)(1), (c)(2) and (c)(4).

This application is being returned to the DO/EO/US for processing in accordance with this decision.

Derek A. Putonen
Attorney Advisor
Office of PCT Legal Administration
Tel: (571) 272-3294
Fax: (571) 273-0459

UNITED STATES PATENT AND TRADEMARK OFFICE

Commissioner for Patents
United States Patent and Trademark Office
P.O. Box 1450
Alexandria, VA 22313-1450
www.uspto.gov

**PARFOMAK, ANDREW N.**
**NORRIS MCLAUGHLIN & MARCUS PA**
**875 THIRD AVE, 8TH FLOOR**
**NEW YORK NY 10022**

MAILED

FEB 04 2010

OFFICE OF PETITIONS

| | | |
|---|---|---|
| In re Application of | : | |
| Andrea Duddington, et al. | : | |
| Application No. 10/528,714 | : | DECISION ON PETITION |
| Filed: August 24, 2005 | : | |
| Attorney Docket No. 102792-429(11038P1) | : | |

This is a decision on the petition under the unintentional provisions of 37 CFR 1.137(b), filed November 23, 2009, to revive the above-identified application.

The petition is **GRANTED**.

The application became abandoned for failure to reply in a timely manner to the non-final Office action mailed, November 25, 2008, which set a shortened statutory period for reply of three (3) months. No extensions of time under the provisions of 37 CFR 1.136(a) were obtained. Accordingly, the application became abandoned on February 26, 2009. The Notice of Abandonment was mailed November 18, 2009.

The petition satisfies the requirements of 37 CFR 1.137(b) in that petitioner has supplied (1) the reply in the form of an amendment, (2) the petition fee of $1,620, and (3) a proper statement of unintentional delay.

Telephone inquiries concerning this decision should be directed to Terri Johnson at (571) 272-2991.

This application is being referred to Technology Center AU 1611 for appropriate action by the Examiner in the normal course of business on the reply received.

Terri Johnson

Terri Johnson
Petitions Examiner
Office of Petitions

UNITED STATES PATENT AND TRADEMARK OFFICE

COMMISSIONER FOR PATENTS
UNITED STATES PATENT AND TRADEMARK OFFICE
P.O. BOX 1450
ALEXANDRIA, VA 22313-1450
www.uspto.gov

OBLON, SPIVAK, MCCLELLAND MAIER & NEUSTADT, P.C.
1940 DUKE STREET
ALEXANDRIA VA 22314

COPY MAILED
MAR 17 2009
OFFICE OF PETITIONS

In re Application of :
Terranova, et al. : DECISION ON PETITION
Application No. 10/528,722 :
Filed: July 19, 2006 :
Atty. Dkt. No: 282778US8XPCT :

This decision is in response to the petition to withdraw the holding of abandonment under 37 CFR 1.181 filed December 12, 2008.

The application was held abandoned for failure to timely submit a proper reply to non-final Office action mailed October 18, 2007. The non-final Office action set a three month shortened statutory period of time for reply. Notice of Abandonment was mailed July 14, 2008.

Petitioners assert non-receipt of the non-final Office action in that applicants did not receive "e-notification" that the Office action was pending.

Internal USPTO investigation reveals applicants did not receive USPTO electronic notification concerning the non-final Office action dated October 18, 2007.

In view thereof, the holding of abandonment is withdrawn and the Notice of Abandonment is vacated.

Further, the petition to withdraw the holding of abandonment is hereby **GRANTED**.

This application is being forwarded to Group Art Unit 2167 for re-mailing of the non-final Office action. The time period for reply to the non-final Office action will be set forth therein.

Telephone inquiries concerning this matter may be directed to the undersigned at (571) 272-3205.

*/ALESIA M. BROWN/*
Alesia M. Brown
Petitions Attorney
Office of Petitions

UNITED STATES PATENT AND TRADEMARK OFFICE

COMMISSIONER FOR PATENTS
UNITED STATES PATENT AND TRADEMARK OFFICE
P.O. BOX 1450
ALEXANDRIA, VA 22313-1450
www.uspto.gov

11 OCT 2006

Robert A Franks
Dr Reddy's Laboratories Inc
200 Somerset Corporate Blvd
Seventh Floor
Bridgewater NJ 08807-2826

| | |
|---|---|
| In re Application of:<br>TIMMER, Richard, T., et al.<br>U.S. Application No.: 10/528,724<br>PCT No.: PCT/US2003/009356<br>International Filing Date: 26 March 2003<br>Claimed Priority Date: 23 September 2002<br>Attorney's Docket No.: RUS 3.3-003<br>For: METHODS AND COMPOSITIONS OF NOVEL TRIAZINE COMPOUNDS | DECISION ON PETITION TO CHANGE INVENTOR'S NAME (37 CFR 1.182) |

This decision is issued in response to the "Petition Under 37 CFR 1.182" filed by applicants on 06 September 2006. Applicants have paid the required $400 petition fee.

## BACKGROUND

On 26 March 2003, applicants filed international application PCT/US2003/009356. The application claimed a priority date of 23 September 2002, and it designated the United States. The deadline for submission of the basic national fee was thirty months from the priority date, i.e., 23 March 2005.

On 22 March 2005, applicants filed a Transmittal Letter for entry into the national stage in the United States accompanied by, among other materials, payment of the basic national fee.

On 24 January 2006, the United States Designated/Elected Office (DO/EO/US) mailed a Notification Of Missing Requirements (Form (PCT/DO/EO/905) requiring submission of an oath or declaration in compliance with 37 CFR 1.497 and the surcharge for filing the oath or declaration later than thirty months after the priority date.

On 12 May 2006, applicants filed a response to the Notification Of Missing Requirements (with required extension fee) that included an executed declaration and the required surcharge payment.

On 09 August 2006, the DO/EO/US mailed a Notification Of Defective Response (Form PCT/DO/EO/916) indicating that the declaration filed 12 May 2006 was defective because the name for the inventor identified on the declaration as Sesha Srivedi ALLURI did not correspond to this inventor's name on the published international application.

On 06 September 2006, applicants filed the petition considered herein. The petition asserts that the correct name for the inventor at issue is Sesha Sridevi ALLURI, as listed in the declaration filed 12 May 2006. The petition states that this inventor's name (listed as SRIVEDI, Bhatlapenumarthy, Sesha on the international application) had been changed after the filing of the international application due to marriage.

## DISCUSSSION

Section 605.04(c) of the Manual Of Patent Examining Procedure ("MPEP") sets forth the requirements for a petition under 37 CFR 1.182 to correct an inventor's name where, as here, the inventor's name has been changed after the filing of the application. According to the MPEP, such a petition "must include an appropriate petition fee and an affidavit signed by the inventor setting forth both names and the procedure whereby the change of name was effected, or a certified copy of the court order."

Here, applicants' submission included payment of the required petition fee. However, applicants have not submitted an affidavit by Sesha Sridevi ALLURI setting forth both her current and previous names and the procedure whereby her name was changed (i.e., marriage), or a certified copy of a court order confirming such change. Applicants therefore have not satisfied the requirements for a grantable petition to correct the name of record for this inventor.

## CONCLUSION

Applicants' petition under 37 CFR 1.182 is **DISMISSED** without prejudice.

The declaration submitted by applicants on 12 May 2006 remains defective for failure to properly identify all the inventors of record.

Any request for reconsideration on the merits must be filed within **TWO (2) MONTHS** from the mail date of this decision. Any such response must include either the required affidavit from the inventor whose name has changed or a certified copy of the court order confirming the name change, as discussed above and in the MPEP.

Failure to file a proper response in a timely manner will result in **ABANDONMENT** of the application. Extensions of time are available under 37 CFR 1.136(a).

Any further correspondence with respect to this matter should be addressed to the Mail Stop PCT, Commissioner for Patents, P.O. Box 1450, Alexandria, Virginia 22313-1450, with the contents of the letter marked to the attention of the Office of PCT Legal Administration.

Richard M. Ross
Attorney Advisor
Office of PCT Legal Administration
Telephone: (571) 272-3296
Facsimile: (571) 273-0459

0 5 JAN 2007

UNITED STATES PATENT AND TRADEMARK OFFICE

Commissioner for Patents
United States Patent and Trademark Office
P.O. Box 1450
Alexandria, VA 22313-1450
www.uspto.gov

Robert A Franks
Dr Reddy's Laboratories Inc
200 Somerset Corporate Blvd
Seventh Floor
Bridgewater NJ 08807-2826

| | |
|---|---|
| In re Application of: TIMMER, Richard, T., et al. :<br>U.S. Application No.: 10/528,724 :<br>PCT No.: PCT/US2003/009356 :<br>International Filing Date: 26 March 2003 :<br>Claimed Priority Date: 23 September 2002 :<br>Attorney's Docket No.: RUS 3.3-003 :<br>For: METHODS AND COMPOSITIONS OF :<br>NOVEL TRIAZINE COMPOUNDS : | DECISION ON RENEWED PETITION TO CHANGE INVENTOR'S NAME (37 CFR 1.182) |

This decision is issued in response to the "Petition For Reconsideration Under Rule 37 CFR 1.182" filed by applicants on 19 December 2006, treated herein as a renewed petition to change the inventor's name, and the declaration document filed by facsimile on 04 January 2007. No additional petition fee is required.

## BACKGROUND

The procedural background for this application was set forth in detail in the decision mailed herein on 11 October 2006. That decision dismissed applicants' petition under 37 CFR 1.182 to correct the name of one of the inventors based on the failure to provide all the requirements for a grantable petition. Specifically, applicants had not provided the required statement from the inventor whose name was to be changed.

On 19 December 2006, applicants filed the "Petition For Reconsideration Under Rule 37 CFR 1.182" treated herein as a renewed petition (with required one-month extension fee).

On 04 January 2007, applicants filed by facsimile an additional declaration document.

## DISCUSSSION

The renewed petition includes an affidavit from inventor Sesha Sridevi Alluri confirming that her name at the time the international application was filed was Sesha Bhatlapernumarthy Sridevi, that she subsequently was married, and that, as a result of her marriage, her name has been changed to Sesha Sridevi Alluri, as set forth on the declaration filed 12 May 2006. This statement from the inventor satisfies the final requirement for a grantable petition to change the inventor's name.

The declaration documents submitted on 12 May 2006 are therefore no longer defective for failure to name the correct inventive entity. However, a further review of the declaration materials revealed that the complete declaration executed by inventor Gaddam Om REDDY has not been provided. Applicants filed copies of two complete five-page declarations; the first ten inventors executed these declarations. However, with respect to the last named inventor, Gaddam Om REDDY, applicants filed only the signed signature page.

In response to a telephone request, on 04 January 2007, applicants filed by facsimile a copy of the complete declaration document signed by Gaddam Om REDDY. This declaration complies with the requirements of 37 CFR 1.497.

## CONCLUSION

Applicants' petition under 37 CFR 1.182 to change the name of record for inventor Sesha Bhatlapernumarthy Sridevi to Sesha Sridevi Alluri is **GRANTED**.

Based on the above, the declarations filed 12 May 2006 are no longer considered defective for failure to properly identify the correct inventive entity herein.

As noted above, however, the declarations filed 12 May 2006 did not include the complete declaration document executed by the final named inventor, Gaddam Om REDDY. Applicants filed this complete declaration on 04 January 2007.

The application is being referred to the National Stage Processing Branch of the Office of PCT Operations for further processing in accordance with this decision. The date under 35 U.S.C. 371(c)(1), (c)(2), and (c)(4) is 04 January 2007.

Richard M. Ross
Attorney Advisor
Office of PCT Legal Administration
Telephone: (571) 272-3296
Facsimile: (571) 273-0459

#3

UNITED STATES PATENT AND TRADEMARK OFFICE

23 NOV 2005

Commissioner for Patents
United States Patent and Trademark Office
P.O. Box 1450
Alexandria, VA 22313-1450
www.uspto.gov

Susan T. Hubl
FENWICK & WEST
801 California Street
Mountain View, California 94041

| | |
|---|---|
| In re Application of:<br>PACKER, Nicolle, Hannah, et al.<br>U.S. Application No.: 10/528,745<br>PCT No.: PCT/US2003/001063<br>International Filing Date: 20 August 2003<br>Priority Date: 20 August 2002<br>Attorney's Docket No.: 23681-10204<br>For: METHOD OF IDENTIFYING MARKERS DIAGNOSTIC OF DISEASE AND USES THEREFOR IN THE DIAGNOSIS OF CANCER | DECISION ON PETITION FOR REVIVAL OF ABANDONED APPLICATION UNDER 37 CFR 1.137(b) |

The petition for revival under 37 CFR 1.137(b) filed 22 March 2005 in the above-captioned application is hereby **GRANTED** as follows:

Applicant's statement that "the entire delay in filing the required reply from the due date for the required reply until the filing of a grantable petition under 37 CFR 1.137(b) was unintentional" satisfies the requirements of 37 CFR 1.137(b)(3).

Applicant has now submitted the small entity basic national fee and the requirements of 37 CFR 1.137(b) have been satisfied. Therefore, the request to revive the application is granted as to the national stage in the United States.

This application is being returned to the National Stage Processing Division of the Office of PCT Operations for further processing in accordance with this decision, including the issuance of a Notification Of Missing Requirements (Form PCT/DO/EO/905) requiring submission of an executed oath or declaration in compliance with 37 CFR 1.497.

Richard M. Ross
PCT Petitions Attorney
Office Of PCT Legal Administration
Telephone: (571) 272-3296
Facsimile: (571) 273-0459

UNITED STATES PATENT AND TRADEMARK OFFICE

UNITED STATES DEPARTMENT OF COMMERCE
United States Patent and Trademark Office
Address: COMMISSIONER FOR PATENTS
P.O. Box 1450
Alexandria, Virginia 22313-1450
www.uspto.gov

TOWNSEND AND TOWNSEND AND CREW, LLP
TWO EMBARCADERO CENTER
8TH FLOOR
SAN FRANCISCO, CA 94111

Mail Date: 04/21/2010

| | | |
|---|---|---|
| **Applicant** | : Robert H Shoemaker | : DECISION ON REQUEST FOR |
| **Patent Number** | : 7572828 | : RECALCULATION of PATENT |
| **Issue Date** | : 08/11/2009 | : TERM ADJUSTMENT IN VIEW |
| **Appliction No** | : 10/528,747 | : OF WYETH AND NOTICE OF INTENT TO |
| **Filed** | : 03/22/2005 | : ISSUE CERTIFICATE OF CORRECTION |
| | | : |

The Request for Recalculation is **GRANTED** to the extent indicated.

The patent term adjustment has been determined to be **573** days. The USPTO will *sua sponte* issue a certificate of correction reflecting the amount of PTA days determined by the recalculation.

Prior to the issuance of the certificate of correction, the USPTO will afford patentee an opportunity to be heard and request reconsideration. Accordingly, patentee has **one month or thirty (30) days**, whichever is longer, to file a request for reconsideration of this patent term adjustment calculation. See 35 U.S.C. 154(b)(3)(B)(ii) and 37 CFR 1.322(a)(4). No extensions of time will be granted under 37 CFR 1.136.

Patentee should use document code PET.OP if electronically filing a request for reconsideration of this patent term adjustment calculation. The patentee must also include the information required by 37 CFR 1.705(b)(2) and the fee required by 37 CFR 1.18(e). If patentee does not file a timely request for reconsideration of this patent term adjustment calculation including the information required by 37 CFR 1.705(b)(2) and the fee required by 37 CFR 1.18(e), the USPTO will issue a certificate of correction reflecting the PTA determination noted above.

Patentee should be aware that in order to preserve the right to review in the United States District Court for the District of Columbia of the USPTO patent term adjustment determination, patentee must ensure that he or she also take the steps required under 35 U.S.C. 154(b)(4)(A) in a timely manner. Nothing in the request for recalculation should be construed as providing an alternative time frame for commencing a civil action under 35 U.S.C. 154(b)(4)(A).

Any questions concerning this decision should be directed to the Office of Patent Legal Administration at 571-272-7702.

31 AUG 2005

#5

UNITED STATES PATENT AND TRADEMARK OFFICE

COMMISSIONER FOR PATENTS
UNITED STATES PATENT AND TRADEMARK OFFICE
P.O. BOX 1450
ALEXANDRIA, VA 22313-1450
www.uspto.gov

NILS H. LJUNGMAN & ASSOCIATES
P. O. BOX 130
GREENSBURG, PA 15601-0130

| | | |
|---|---|---|
| In re Application of JUNGHANS et al | : | |
| U.S. Application No.: 10/528,748 | : | |
| PCT Application No.: PCT/DE03/03179 | : | |
| Int. Filing Date: 19 September 2003 | : | DECISION |
| Priority Date Claimed: 23 September 2002 | : | |
| Attorney Docket No.: NHL-NP-49-NP | : | |
| For: VACCINE AGAINST INFECTIONS | : | |
| CAUSED BY ONCOVIRUSES SUCH AS | : | |
| THE FELINE LEUCOSIS VIRUS OF CATS | : | |

This is in response to applicant's "Petition for Revival of an Application for Patent Abandoned Unintentionally Under 37 CFR 1.137(b)" filed 24 August 2005.

## BACKGROUND

On 19 September 2003, applicant filed international application PCT/DE03/03179, which claimed priority of an earlier Germany application filed 23 September 2002. A copy of the international application was communicated to the USPTO from the International Bureau on 08 April 2004. The thirty-month period for paying the basic national fee in the United States expired on 23 March 2005.

On 22 March 2005, applicant filed purported national stage papers in the United States Designated/Elected Office (DO/EO/US). The submission was not accompanied by the basic national fee required by 35 U.S.C. 371(c)(1).

International application PCT/DE03/03179 became abandoned as to the United States for failure to timely pay the basic national fee.

On 12 April 2005, applicant filed an execute declaration.

On 24 August 2005, applicant filed the present petition under 37 CFR 1.137(b).

## DISCUSSION

Under 37 CFR 1.137(b), a petition requesting that an application be revived on the grounds of unintentional abandonment must be accompanied by: (1) the required reply unless previously filed, (2) the petition fee as set forth in 37 CFR 1.17(m), (3) a statement that the entire delay in filing the required reply from the due date for the reply until the filing of a grantable petition was unintentional, and (4) a terminal disclaimer if the application was filed before 08 June 1995.

With regard to item (1), applicant has provided the required basic national fee under 35 U.S.C. 371.

With regard to item (2), applicant has provided the required petition fee.

With regard to item (3), applicant has provided the required statement.

With regard to item (4), because the international application was filed after 08 June 1995, no terminal disclaimer is required.

## CONCLUSION

For the reasons above, the petition under 37 CFR 1.137(b) is GRANTED.

This application is being forwarded to the United States Designated/Elected Office (DO/EO/US) for further processing in accordance with this decision, including preparation and mailing of a Notice of Defective Declaration, which should indicate that the declaration filed 12 April 2005 is improper.[1]

Bryan Tung
PCT Legal Examiner
PCT Legal Office

Telephone: 571-272-3303
Facsimile: 571-273-0459

[1] Applicant is advised that the declaration filed 12 April 2005 is an improper composite declaration. Specifically, the declaration consists of one each of pages 1, 2, and 4 and two of page 3. It is not acceptable to submit only the signature page of a declaration since doing so raises doubt as to whether the signature page was associated with the rest of the declaration pages at the time of execution. Applicant is required to submit either: (1) a single complete declaration which is presented to and executed by all of the inventors or (2) multiple complete declarations, each of which is presented to an executed by at least one of the inventors.

UNITED STATES PATENT AND TRADEMARK OFFICE

Commissioner for Patents
United States Patent and Trademark Office
P.O. Box 1450
Alexandria, VA 22313-1450
www.uspto.gov

02 OCT 2006

22045
BROOKS KUSHMAN P.C.
1000 Town Center
Twenty-Second Floor
Southfield, MI 48075

| | | |
|---|---|---|
| In re Application of | : | |
| LI *et al* | : | |
| U.S. Application No.: 10/528,765 | : | |
| PCT No.: PCT/EP2003/010410 | : | |
| Int. Filing Date: 18 September 2003 | : | **DECISION** |
| Priority Date: 25 September 2002 | : | |
| Attorney Docket No.: 0WSAG0107PUSA | : | |
| For: TWO-LAYER LTO TEMPERATURE | : | |
| OXIDE BACKSIDE SEAL FOR A | : | |
| WAFER | : | |

This decision is in response to applicants' "Request for Reconsideration of Petition Under 37 C.F.R. §1.47(a)" filed 18 September 2006.

## BACKGROUND

On 18 July 2006, a decision dismissing applicants' petition under 37 CFR 1.47(a) was mailed. Applicants failed to satisfy item (2) of 37 CFR 1.47(a). Applicants were given two months to respond.

On 18 September 2006, applicants filed the renewed petition which was accompanied by, *inter alia*, a declaration of James W. Procia and a copy of an email dated 22 November 2005.

## DISCUSSION

As previously noted, a petition under 37 CFR 1.47(a) requires: (1) the petition fee; (2) factual proof that the missing joint inventor cannot be located or refuses to cooperate; (3) a statement of the last known address of the nonsigning joint inventor; (4) and an oath or declaration executed by the signing joint inventor on their behalf and on behalf of the nonsigning joint inventor.

Items (1), (3) and (4) of 37 CFR 1.47(a) were completed in the initial petition.

Regarding item (2), the 37 CFR 1.47(a) claims that joint inventor, Jin-Xing Li cannot be located. In the initial petition, applicant submitted evidence that they attempted to locate the nonsigning inventor by contacting the former employer of Mr. Li.

However, petitioner did not provide a statement of facts (by the person having firsthand knowledge) outlining the steps taken to locate the whereabouts of the nonsigning inventor. Moreover, there was no evidence that a search of phone or internet records was even attempted to locate Mr. Li.

In the renewed petition, the 37 CFR 1.47(a) applicant has submitted a declaration of James W. Proscia who claims that he attempted to send a copy of the declaration and assignment to the last known address of the nonsigning inventor. Mr. Proscia states that "[d]elivery of these items was not successful." No documentary evidence of this claim was submitted in the renewed petition.

Mr. Proscia also claims that he attempted to locate the address of the nonsigning inventor using the internet but was unsuccessful. A yellow page search based in Singapore was cited. Petitioners also used three U.S. based people finder websites. However, petitioners again submitted no documentary evidence to substantiate this account.

This is still insufficient. To demonstrate that a diligent effort was made to locate the nonsigning inventor. Copies of all documentary evidence, including internet searches and postal receipts should be filed to meet the requirements of section 409.03(d) of the MPEP. Moreover, the use of a yellow page directory to locate an individual instead of a white page directory is also questioned. Item (2) of 37 CFR 1.47(a) is still not satisfied.

## CONCLUSION

For the reasons discussed above, applicants' renewed petition under 37 CFR 1.47(a) is **DISMISSED** without prejudice.

If reconsideration on the merits of this petition is desired, a proper response must be filed within **TWO (2) MONTHS** from the mail date of this decision. No additional petition fee is required.

Any further correspondence with respect to this matter deposited with the United States Postal Service should be addressed to the Mail Stop PCT, Commissioner for Patents, Office of PCT Legal Administration, P.O. Box 1450, Alexandria, Virginia 22313-1450, with the contents of the letter marked to the attention of the Office of PCT Legal Administration.

James Thomson

James Thomson

**10/528,765**

Attorney Advisor
Office of PCT Legal Administration

Tel.: (571) 272-3302

#5

18 JUL 2006

UNITED STATES PATENT AND TRADEMARK OFFICE

Commissioner for Patents
United States Patent and Trademark Office
P.O. Box 1450
Alexandria, VA 22313-1450
www.uspto.gov

22045
BROOKS KUSHMAN P.C.
1000 Town Center
Twenty-Second Floor
Southfield, MI 48075

| | | |
|---|---|---|
| In re Application of | : | |
| LI *et al* | : | |
| U.S. Application No.: 10/528,765 | : | |
| PCT No.: PCT/EP2003/010410 | : | |
| Int. Filing Date: 18 September 2003 | : | **DECISION** |
| Priority Date: 25 September 2002 | : | |
| Attorney Docket No.: 0WSAG0107PUSA | : | |
| For: TWO-LAYER LTO TEMPERATURE OXIDE BACKSIDE SEAL FOR A WAFER | : | |

This decision is in response to applicants' "Petition Under 37 C.F.R. §1.47(a)" filed 19 January 2006.

## BACKGROUND

On 17 October 2005, the DO/EO/US mailed a Notification of Missing Requirements Under 35 U.S.C. 371 (Form PCT/DO/EO/905) indicating that an oath or declaration in compliance with 37 CFR 1.497(a) and (b) and a surcharge fee was required. Applicants were given two months to respond with extensions of time available.

On 19 January 2006, applicants filed the subject petition which was accompanied by, *inter alia*, exhibits A - D and the $130.00 surcharge fee.

## DISCUSSION

A petition under 37 CFR 1.47(a) requires: (1) the petition fee; (2) factual proof that the missing joint inventor cannot be located or refuses to cooperate; (3) a statement of the last known address of the nonsigning joint inventor; (4) and an oath or declaration executed by the signing joint inventor on their behalf and on behalf of the nonsigning joint inventor.

Concerning item (1), the fee for a petition under 37 CFR 1.47 changed to $200.00 on 08 December 2004. Petitioners submitted a $130.00 petition fee on 14 December 2004. The $70.00 difference will be charged to Deposit Account No. 02-3978 as authorized.

With regards to item (3), the last known address of Jin-Xing Li is listed as:

BLK 722,
#02-123
Singapore, 510722

Concerning item (4), the 37 CFR 1.47(a) applicant submitted a declaration signed by one of the two named inventors on their own behalf and on behalf of the nonsigning joint inventor. This declaration meets the requirements of section 409.03(a) and is in compliance with 37 CFR 1.497(a) and (b).

Items (1), (3) and (4) of 37 CFR 1.47(a) are satisfied.

Regarding item (2), section 409.03(d) of the MPEP discusses situations where an inventor cannot be reached and states, in part:

> Where inability to find or reach a nonsigning inventor "after diligent effort" is the reason for filing under 37 CFR 1.47, a statement of facts should be submitted that fully describes the exact facts which are relied on to establish that a diligent effort was made . . .
>
> The statement of facts must be signed, where at all possible, by a person having firsthand knowledge of the facts recited therein. Statements based on hearsay will not normally be accepted. Copies of documentary evidence such as internet searches, certified mail return receipts, cover letters of instructions, telegrams, that support a finding that the nonsigning inventor could not be found or reached should be made part of the statement. The steps taken to locate the whereabouts of the nonsigning inventor should be included in the statement of facts. It is important that the statement contain facts as opposed to conclusions.

Applicant submitted evidence that they attempted to locate the nonsigning inventor by contacting the former employer of Mr. Li. However, this evidence alone is insufficient to show that a "diligent effort" was made to locate the nonsigning inventor. In addition, petitioner has not provided the required statement of facts (by the person having firsthand knowledge) outlining the steps taken to locate the whereabouts of the nonsigning inventor. Moreover, there was no evidence that a search of phone or internet records was even attempted to locate Mr. Li.

For these reason, item (2) is not yet satisfied.

## CONCLUSION

Applicants' petition under 37 CFR 1.47(a) is **DISMISSED** without prejudice.

If reconsideration on the merits of this petition is desired, a proper response must be filed within **TWO (2) MONTHS** from the mail date of this decision. No additional petition fee is required.

Any further correspondence with respect to this matter deposited with the United States Postal Service should be addressed to the Mail Stop PCT, Commissioner for Patents, Office of PCT Legal Administration, P.O. Box 1450, Alexandria, Virginia 22313-1450, with the contents of the letter marked to the attention of the Office of PCT Legal Administration.

James Thomson

James Thomson
Attorney Advisor
Office of PCT Legal Administration

Tel.: (571) 272-3302

#7

UNITED STATES PATENT AND TRADEMARK OFFICE

Commissioner for Patents
United States Patent and Trademark Office
P.O. Box 1450
Alexandria, VA 22313-1450
www.uspto.gov

06 DEC 2006

22045
BROOKS KUSHMAN P.C.
1000 Town Center
Twenty-Second Floor
Southfield, MI 48075

In re Application of :
LI *et al* :
U.S. Application No.: 10/528,765 :
PCT No.: PCT/EP2003/010410 :
Int. Filing Date: 18 September 2003 : **DECISION**
Priority Date: 25 September 2002 :
Attorney Docket No.: 0WSAG0107PUSA :
For: TWO-LAYER LTO TEMPERATURE :
OXIDE BACKSIDE SEAL FOR A :
WAFER :

This decision is in response to applicants' "Request for Reconsideration of Petition Under 37 C.F.R. §1.47(a)" filed via facsimile on 01 December 2006.

## BACKGROUND

On 02 October 2006, a decision dismissing applicants' petition under 37 CFR 1.47(a) was mailed. Applicants again failed to satisfy item (2) of 37 CFR 1.47(a). Applicants were given two months to respond.

On 01 December 2006, applicants filed the renewed petition which was accompanied by, *inter alia*, an executed declaration.

## DISCUSSION

In response to the decision mailed 02 October 2006, petitioners submitted a declaration signed by the nonsigning inventor, Jin-Xing Li. A review of the declaration shows that it complies with 37 CFR 1.497(a) and (b).

No further action on the petition under 37 CFR 1.47(a) is required.

## CONCLUSION

Accordingly, the petition under 37 CFR 1.47(a) is **DISMISSED** as **MOOT**.

Applicants have completed the requirements for acceptance under 35 U.S.C.

**10/528,765**

371(c). The application has an international filing date of 18 September 2003 under 35 U.S.C. 363 and a 35 U.S.C. 371(c)(1), (c)(2) and (c)(4) date of 01 December 2006.

This application is being forwarded to the National Stage Processing Division of the Office of PCT Operations for continued processing.

James Thomson
Attorney Advisor
Office of PCT Legal Administration

Tel.: (571) 272-3302

UNITED STATES PATENT AND TRADEMARK OFFICE

Commissioner for Patents
United States Patent and Trademark Office
P.O. Box 1450
Alexandria, VA 22313-1450
www.uspto.gov

SUGHRUE MION PLLC
2100 PENNSYLVANIA AVENUE NW
SUITE 800
WASHINGTON, DC 20037

COPY MAILED
NOV 17 2006
OFFICE OF PETITIONS

| | |
|---|---|
| In re Application of | : |
| Ikuya Seki et al | : |
| Application No. 10/528,771 | : DECISION GRANTING PETITION |
| Filed: March 23, 2005 | : UNDER 37 CFR 1.313(c)(2) |
| Attorney Docket No. Q86824 | : |

This is a decision on the petition, filed November 13, 2006, under 37 CFR 1.313(c)(2) to withdraw the above-identified application from issue after payment of the issue fee.

The petition is **GRANTED**.

The above-identified application is withdrawn from issue for consideration of a submission under 37 CFR 1.114 (request for continued examination). See 37 CFR 1.313(c)(2).

***Petitioner is advised that the issue fee paid on October 31, 2006 in the above-identified application cannot be refunded. If, however, the above-identified application is again allowed, petitioner may request that it be applied towards the issue fee required by the new Notice of Allowance.***[1]

Telephone inquiries should be directed to the undersigned at (571) 272-3218.

This matter is being referred to Technology Center AU 1654 for processing of the request for continued examination under 37 CFR 1.114 and for consideration of the Information Disclosure Statement.

Frances Hicks
Petitions Examiner
Office of Petitions

C:\Documents and Settings\FHicks\My Documents\470\NOV10\528771.wpd

---

[1] *The request to apply the issue fee to the new Notice may be satisfied by completing and returning the new Part B – Fee(s) Transmittal Form (along with any balance due at the time of submission). Petitioner is advised that the Issue Fee Transmittal Form must be completed and timely submitted to avoid abandonment.*

20 APR 2006

#6

UNITED STATES PATENT AND TRADEMARK OFFICE

Commissioner for Patents
United States Patent and Trademark Office
P.O. Box 1450
Alexandria, VA 22313-1450
www.uspto.gov

Marina V. Schneller
VENABLE LLP
P.O. Box 34385
Washington, D.C. 20043-9998

| | |
|---|---|
| In re application of<br>LUNKENHEIMER, Rudolf; et al.<br>U.S. Application No.: 10/528,798<br>International Application: PCT/EP2003/009256<br>International Filing Date: 21 August 2003<br>Priority Date: 23 August 2002<br>Attorney Docket No.:31608-215251<br>For: SUSPENSIONS | DECISION ON PETITION<br>UNDER 37 CFR 1.137(b) |

This decision is in response to applicants' "Petition to Revive an Abandoned Application under 37 CFR 1.37(b)" filed 28 March 2005 in the United States Patent and Trademark Office (USPTO).

## BACKGROUND

On 21 August 2003, applicants filed international application PCT/EP03/009256 which claimed priority of an earlier application filed 23 August 2002. Pursuant to 37 CFR 1.495, the deadline for payment of the basic national fee in the United States was to expire 30 months from the priority date, 23 February 2005.

On 23 March 2005, applicants filed a transmittal for entry into the national stage in the United States, which accompanied by, inter alia: the requisite basic national fee as required by 35 U.S.C. 371(c)(1); and a Declaration.

On 28 March 2005, applicants filed a Petition to Revive pursuant to 37 CFR 1.137(b).

## DISCUSSION

A petition under 37 CFR 1.137(b) requesting that the application be revived on the grounds of unintentional abandonment must be accompanied by (1) the required reply, (2) the petition fee required by law, (3) a statement that the "entire delay in filing the required reply from the due date for the reply until the filing of a grantable petition pursuant to this paragraph was unintentional," and (4) any terminal disclaimer and fee required pursuant to 37 CFR 1.137(c).

With regard to Item (1), the proper response, i.e., the submission of the basic national fee has been received.

As to Item (2), the appropriate petition fee of $1500.00 as required by 37 CFR 1.17(m) will be charged to Deposit Account Number 22-0261.

With regard to Item (3), applicant's statement that "[t]he entire delay in filing the required reply from the due date for the required reply until the filing of a grantable petition under 37 CFR 1.137(b) was unintentional" has been satisfied.

As to Item (4), the terminal disclaimer is not required since this application was filed after 08 June 1995.

It should be noted that, in the Response to Notification of Missing Requirements, received 17 January 2006, Applicants stated that an English translation of the as-filed German-language application was submitted. However, upon inspecting the application file, no English translation was found.

## CONCLUSION

All of the requirements of 37 CFR 1.137(b) have been met and applicants' petition to revive is **GRANTED**.

This application is being forwarded to the United States Designated/Elected Office (US/DO/EO) for continued processing including the issuance of a Notification of Missing Requirements (Form PCT/DO/EO/905) indicating that a translation of the international application is required.

Terrence R. Till
Petitions Detailee
Office of PCT Legal Administration
U.S. Patent and Trademark Office
P.O. Box 1450
Alexandria, VA 22313
VOX (571) 272-6094
FAX (571) 273-0459

Boris Milef
PCT Legal Examiner
Office of PCT Legal Administration
U.S. Patent and Trademark Office
P.O. Box 1450
Alexandria, VA 22313
VOX (571) 272-3288
FAX (571) 273-0459

#3

UNITED STATES PATENT AND TRADEMARK OFFICE

Commissioner for Patents
United States Patent and Trademark Office
P.O. Box 1450
Alexandria, VA 22313-1450
www.uspto.gov

POWELL GOLDSTEIN LLP
INTELLECTUAL PROPERTY GROUP
901 NEW YORK AVENUE, N.W.
THIRD FLOOR
WASHINGTON DC 20001

| | |
|---|---|
| In re Application of<br>BRODER, Christopher C. et al.<br>Application No.: 10/528,800<br>PCT No.: PCT/US02/36283<br>Int. Filing Date: 13 November 2002<br>Priority Date: 13 November 2001<br>Docket No.: 144004.01100<br>For: COMPOSITIONS AND METHODS FOR THE INHIBITION OF MEMBRANE FUSION BY PARAMYXOVIRUSES | DECISION<br><br>ON PETITION UNDER<br><br>37 CFR 1.137(b) |

Applicants' "Petition For Revival of International Application Designating the U.S. Unintentionally Abandoned Under 37 C.F.R. §1.137(b)," filed in the above-captioned application on 23 March 2005 is **GRANTED**.

Applicants' statement that the entire delay in filing the required reply from the due date for the required reply until the filing of a grantable petition under 37 CFR 1.137(b) was unintentional complies with 37 CFR 1.137(b)(3). The appropriate national fee and petition fee have been submitted. A terminal disclaimer is not required as the application was filed on or after 08 June 1995. Accordingly, all requirements under 37 CFR 1.137(b) have been satisfied.

A signed oath or declaration has not yet been submitted.

This application is being forwarded to the National Stage Processing Branch of the Office of PCT Operations for continued processing in accordance with this decision, including the mailing of a Notification of Missing Requirements (Form PCT/DO/EO/905) indicating that an oath or declaration in compliance with 37 CFR 1.497(a)-(b) and the surcharge for late filing of the search fee, examination fee or the oath or declaration are required.

Erin P. Thomson

Erin P. Thomson
Attorney Advisor
PCT Legal Administration

Telephone: 571-272-3292
Facsimile: 571-273-0459

DIAC

UNITED STATES PATENT AND TRADEMARK OFFICE

30 NOV 2005

Commissioner for Patents
United States Patent and Trademark Office
P.O. Box 1450
Alexandria, VA 22313-1450
www.uspto.gov

POWELL GOLDSTEIN LLP
INTELLECTUAL PROPERTY GROUP
901 NEW YORK AVENUE, N.W.
THIRD FLOOR
WASHINGTON DC 20001

OIPE IAP46 DEC 02 2005 PATENT & TRADEMARK OFFICE

RECEIVED DEC 02 2005 FINNEGAN, HENDERSON, FARABOW, GARRETT AND DUNNER, LLP

RECEIVED DEC 07 2005 OFFICE OF PETITIONS

In re Application of
BRODER, Christopher C. et al.
Application No.: 10/528,800
PCT No.: PCT/US02/36283
Int. Filing Date: 13 November 2002
Priority Date: 13 November 2001
Docket No.: 144004.01100
For: COMPOSITIONS AND METHODS FOR THE INHIBITION OF MEMBRANE FUSION BY PARAMYXOVIRUSES

DECISION

ON PETITION UNDER

37 CFR 1.137(b)

Applicants' "Petition For Revival of International Application Designating the U.S. Unintentionally Abandoned Under 37 C.F.R. §1.137(b)," filed in the above-captioned application on 23 March 2005 is **GRANTED**.

Applicants' statement that the entire delay in filing the required reply from the due date for the required reply until the filing of a grantable petition under 37 CFR 1.137(b) was unintentional complies with 37 CFR 1.137(b)(3). The appropriate national fee and petition fee have been submitted. A terminal disclaimer is not required as the application was filed on or after 08 June 1995. Accordingly, all requirements under 37 CFR 1.137(b) have been satisfied.

A signed oath or declaration has not yet been submitted.

This application is being forwarded to the National Stage Processing Branch of the Office of PCT Operations for continued processing in accordance with this decision, including the mailing of a Notification of Missing Requirements (Form PCT/DO/EO/905) indicating that an oath or declaration in compliance with 37 CFR 1.497(a)-(b) and the surcharge for late filing of the search fee, examination fee or the oath or declaration are required.

Erin P. Thomson

Erin P. Thomson
Attorney Advisor
PCT Legal Administration

Telephone: 571-272-3292
Facsimile: 571-273-0459

RECEIVED OIPE/IAP DEC 06 2005

04 AUG 2006

UNITED STATES PATENT AND TRADEMARK OFFICE

Commissioner for Patents
United States Patent and Trademark Office
P.O. Box 1450
Alexandria, VA 22313-1450
www.uspto.gov

OLIFF & BERRIDGE, PLC
P.O. BOX 19928
ALEXANDRIA VA 22320

| | |
|---|---|
| In Re Application of<br>KERN et al.<br>Application No.: 10/528,803<br>PCT No.: PCT/EP03/03851<br>Int. Filing Date: 14 April 2003<br>Priority Date: 12 October 2002<br>Attorney Docket No.: 123295<br>For: ELECTRONIC DISPLAY AND CONTROL DEVICE FOR A MEASURING DEVICE | DECISION |

This is a decision on applicant's PETITION UNDER 37 CFR 1.181, Request for Corrected Filing Receipt and corrected Notice of Acceptance filed in the United States Patent and Trademark Office (USPTO) on 23 May 2006.

On 14 April 2003, applicant filed international application No. PCT/EP03/03851 which claimed a priority date of 12 October 2002 and which designated the United States. Thereafter, on 23 March 2005, before the expiration of the thirty month period, applicant filed, *inter alia*, a transmittal letter for entry into the national stage and the basic national stage filing fee. On 07 April 2005, applicant filed an executed declaration.

On 22 July 2005, a Notification of Missing Requirements (Form PCT/DO/EO/905) was mailed to applicant indicating that an oath or declaration, in compliance with 37 CFR 1.497(a) and (b), was required.

On 07 September 2005, applicant filed a Response to the Notification of Missing Requirements indicating that the declaration was filed on 07 April 2005; however, applicant did not include proof of the filing with submission of USPTO date-stamped itemized postcard receipt.

On 30 March 2006, a Notification of Acceptance Under 35 U.S.C. 371 and 37 CFR 1.495 (Form PCT/DO/EO/903) was mailed a 35 U.S.C. 371(c)(1), (c)(2) and (c)(4) date of 07 September 2005.

On 6 December 2005, applicant refiled the declaration along with a USPTO itemized postcard receipt with a date-stamped of 7 April 2005.

On 23 May 2006, applicant filed the instant submission. Applicant urges that the Form PCT/DO/EO/903 be vacated and that a new Notification of Acceptance be issued indicating a 35 U.S.C. 371(c)(1), (c)(2) and (c)(4) date of 07 April 2005.

## DISCUSSION

The original declaration allegedly filed in the USPTO on 07 April 2005 is not located in the application file.

As stated in section 503 of the Manual of Patent Examining Procedure (Rev. 2, May 2004)(MPEP):

> A postcard receipt which itemizes and properly identifies the papers which are being filed serves as *prima facie* evidence of receipt in the USPTO of all the items listed thereon on the date stamped thereon by the USPTO.

A review of the USPTO date-stamped, itemized postcard receipt indicates that a declaration and a general power of attorney were deposited with the USPTO on 07 April 2005 in response to the Notification of Missing Requirements.

The evidence submitted is sufficient to establish that a declaration for this application was, in fact, received in the USPTO on 07 April 2005. The communication filed 23 May 2006 includes a copy of the executed declaration. Accordingly, it is appropriate to accept the copy of the declaration as a replacement for the missing original declaration with a deposit date of 07 April 2005. The evidence submitted by applicant, the postcard receipt date stamped by the USPTO, is sufficient to overcome the *prima facie* evidence of the application file itself.

A review of the declaration reveals that the declaration identifies the inventor, and states the citizenship and mailing address of the inventor. Thus, the declaration is acceptable and the requirements of 37 CFR 1.497 are met.

## CONCLUSION

The petition under 37 CFR 1.181 is **GRANTED**.

The copy of the declaration originally submitted on 07 April 2005 and resubmiited 23 May 2006 is acceptable and meets the requirements of 37 CFR 1.497(a) & (b).

The application will be forwarded to the United States Designated/Elected Office for further processing in accordance with this decision, including issuance of a new Notification of Acceptance (Form PCT/DO/EO/903) and filing receipt. The 35 U.S.C. 371(c)(1), (c)(2) & (c)(4) date is **07 April 2005**.

Cynthia M. Kratz
Attorney Advisor
PCT Legal Office

Telephone: (571) 272-3286

UNITED STATES PATENT AND TRADEMARK OFFICE

Commissioner for Patents
United States Patent and Trademark Office
P.O. Box 1450
Alexandria, VA 22313-1450
www.uspto.gov

**MORRISON & FOERSTER LLP**
**1650 TYSONS BOULEVARD, SUITE 400**
**MCLEAN, CA 22102**

**COPY MAILED**

JAN 22 2008

**OFFICE OF PETITIONS**

| | | |
|---|---|---|
| In re Application of | : | |
| **KLATT**, et al. | : | |
| Application No. 10/528,805 | : | DECISION ON PETITION |
| Filed: March 23, 2005 | : | TO WITHDRAW |
| Attorney Docket No. **449122080100** | : | FROM RECORD |

This is a decision on the Request to Withdraw as attorney or agent of record under 37 C.F.R. § 1.36(b), filed May 25, 2007.

The request is **NOT APPROVED** as moot.

A review of the file record indicates that the power of attorney to **MORRISON & FOERSTER LLP** has been revoked by the assignee of the patent application on August 3, 2007. Accordingly, the request to withdraw under 37 C.F.R. § 1.36(b) is moot.

All future communications from the Office will continue to be directed to the below-listed address until otherwise notified by applicant.

Telephone inquires concerning this decision should be directed to the undersigned at 571-272-7253.

Monica A. Graves
Petitions Examiner
Office of Petitions

cc: **BELL BOYD & LLOYD, LLP**
**P.O. BOX 1135**
**CHICAGO, IL 60690**

29 AUG 2005

#3

UNITED STATES PATENT AND TRADEMARK OFFICE

COMMISSIONER FOR PATENTS
UNITED STATES PATENT AND TRADEMARK OFFICE
P.O. BOX 1450
ALEXANDRIA, VA 22313-1450
www.uspto.gov

Charles Berman, Esq.
Greenberg & Traurig LLP
2450 Colorado Avenue, Suite 400E
Santa Monica, CA 90404

| | | |
|---|---|---|
| In re Application of | : | |
| KACEV et al | : | |
| Application No.: 10/528,819 | : | |
| PCT No.: PCT/AU2003/000484 | : | |
| Int. Filing Date: 23 April 2003 | : | DECISION |
| Priority Date: 25 September 2002 | : | |
| Atty. Docket No.: 58157-014500 | : | |
| For: TURBOCHARGED | : | |
| COMPRESSION IGNITION | : | |
| ENGINE | : | |

This is a decision on applicants' fax transmission filed in the U.S. Patent and Trademark Office (USPTO) on 06 April 2005.

## BACKGROUND

On 23 April 2003, applicants filed international application No. PCT/AU2003/000484 which claimed a priority date of 25 September 2002, and which designated the United States.

On 21 March 2005, prior to the expiration of 30 months from the priority date, applicants filed a transmittal letter for entry into the national stage in the United States which was accompanied by, inter alia,: an authorization to charge the basic national fee to counsel's deposit account and a preliminary amendment both of which were signed by Charles Berman.

On 06 April 2005, applicants filed the present submission, which was titled "Incorrect Charge to USPTO Deposit Account no. 50-2638." In view of the title the submission has been treated as a request for refund.

## DISCUSSION

In the present submission applicants' counsel urges that an improper charge has been made to their deposit account, and indicates that the charge in question relates to the present

application number and to counsel's docket no. 70292-011000. Counsel sets forth that they have no record of the present application number, and that the docket number associated with the charge belongs to another application.

A review of the application file reveals that the originally filed transmittal letter identified international application number PCT/AU2003/000484 and attorney docket number 58157-014500. However, a review the second page of the transmittal letter reveals that, contrary to the indication on the first page, it identifies attorney docket number 70292-011000. As such, when PCT Finance Branch charged the fees to counsel's deposit account, the docket number entered into the USPTO system for the charges was the number on the fee authorization sheet, i.e., the '1000 number. Therefore, while the indication of the attorney docket number associated with the charge was incorrect, the charges themselves were proper and necessary to avoid abandonment of the present international application.

Counsel is advised to correct their records to associate the present application number, 10/528,819, with international application number PCT/AU2003/000484 and attorney docket number 58157-014500.

## CONCLUSION

For the reasons above, the request is **DISMISSED** without prejudice.

Please direct further correspondence with respect to this matter to the Commissioner for Patents, Mail Stop PCT, PO Box 1450, Alexandria, VA 22313-1450, and address the contents of the letter to the attention of the Office of PCT Legal Administration.

This application is being forwarded to the National Stage Processing Branch of the International Division for further processing.

Richard R. Cole
PCT Legal Examiner
Office of PCT Legal Administration

(571) 272-3281
Fax: (571) 273-0459

Encl: Copy of originally filed Transmittal Letter with page 2 as corrected by this Office.

11 OCT 2006

UNITED STATES PATENT AND TRADEMARK OFFICE

Commissioner for Patents
United States Patent and Trademark Office
P.O. Box 1450
Alexandria, VA 22313-1450
www.uspto.gov

Charles Berman, Esq.
Greenberg Traurig LLP
2450 Colorado Avenue, Suite 400E
Santa Monica CA 90404

| | | |
|---|---|---|
| In re Application of | : | |
| KACEV et al. | : | |
| Application No.: 10/528,819 | : | DECISION |
| PCT No.: PCT/AU2003/000484 | : | |
| Int. Filing Date: 23 April 2003 | : | |
| Priority Date: 25 September 2002 | : | |
| Attorney Docket No.: 58157-014500 | : | |
| For: TURBOCHARGED COMPRESSION | : | |
| IGNITION ENGINE | : | |

This decision is in response to applicants' "PETITION TO WITHDRAW HOLDING OF ABANDONMENT UNDER 37 CFR 1.181" filed in the United States Patent and Trademark Office (USPTO) on 14 August 2006. No petition fee is required.

## BACKGROUND

On 23 April 2003, applicants filed international application PCT/AU2003/000484, which designated the United States and claimed a priority date of 25 September 2002. A copy of the international application was communicated to the United States Patent and Trademark Office from the International Bureau on 08 April 2004. The thirty-month period for paying the basic national fee in the United States expired at midnight on 25 March 2005.

On 21 March 2005, applicants filed, *inter alia*, a submission for entry into the national stage in the United States which was accompanied by, *inter alia*, the U.S. Basic National Fee.

On 16 November 2005, the United States Designated/Elected Office (DO/EO/US) mailed a NOTIFICATION OF MISSING REQUIREMENTS UNDER 35 U.S.C. 371 (Form PCT/DO/EO/905) indicating, *inter alia*, that an oath or declaration in compliance with 37 CFR 1.497(a)-(b) and the surcharge under 37 CFR 1.492(h) were required. The Notification set a two-month extendable period for reply.

On 24 July 2006, the DO/EO/US mailed a NOTIFICATION OF ABANDONMENT (Form PCT/DE/EO/909) indicating that the application was abandoned as to the United States of America for failure to reply to the NOTIFICATION OF MISSING REQUIREMENTS mailed 16 November 2005.

On 14 August 2006, applicants filed the instant "PETITION TO WITHDRAW HOLDING OF ABANDONMENT UNDER 37 CFR 1.181". The petition was accompanied by, *inter alia*, a copy of a "RESPONSE TO NOTIFICATION OF MISSING REQUIREMENTS", a copy of a declaration of inventors, and a copy of an "Auto-Reply Facsimile Transmission" from the USPTO dated 13 January 2006.

## DISCUSSION

Applicants have provided sufficient evidence to establish that on 13 January 2006 applicants filed a declaration of the inventors. The proof is in the form of the copy of the "Auto-Reply Facsimile Transmission" which bears a date of 13 January 2006 and which itemizes an "Response to Notification of Missing Requirements" and identifies the above-captioned application number and docket number. Further, practitioner states that the copy of the declaration filed 14 August 2006 is a copy of the declaration originally filed 13 January 2006. Therefore, in view of the "Auto-Reply Facsimile Transmission" and practitioner's statement, the declaration received on 14 August 2006 may properly be accepted as originally received in the USPTO on 13 January 2006. The NOTIFICATION OF ABANDONMENT mailed 24 July 2006 is hereby vacated.

The surcharge under 37 CFR 1.492(h) for filing any of the search fee, the examination fee, or the oath or declaration after the date of the commencement of the national stage has been charged to Deposit Account 50-2638.

A four-month extension of time fee has also been charged to Deposit Account 50-2638.

## CONCLUSION

For the reasons set forth above, the petition under 37 CFR 1.181 is **GRANTED**.

For the reasons set forth above, the NOTIFICATION OF ABANDONMENT mailed 24 July 2006 is VACATED.

This application is being forwarded to the National Stage Processing Branch of the Office of PCT Operations to continue national stage processing of the application in accordance with this decision.

Daniel Stemmer
Legal Examiner
PCT Legal Affairs
Office of Patent Cooperation Treaty
Legal Administration
Telephone: (571) 272-3301
Facsimile: (571) 273-0459

10/11/2006 SBASHEIR 00000001 502638 10528819
Sale Ref: 00000001 DA#: 502638 10528819
01 FC:1254 1590.00 DA
02 FC:1617 130.00 DA

UNITED STATES PATENT AND TRADEMARK OFFICE

Commissioner for Patents
United States Patent and Trademark Office
P.O. Box 1450
Alexandria, VA 22313-1450
www.uspto.gov

JAN 0 9 2008

Steven P. O'Connor
FINNEGAN, HENDERSON, FARABOW,
GARRETT & DUNNER, L.L.P
1 BECTON DRIVE, MC 110
FRANKIN LAKES, NJ 07417-1880

| | | |
|---|---|---|
| In re Application of | : | |
| RAMBACH et al. | : | |
| Serial No.: 10/528,824 | : | Decision on Petition |
| Filed: March 23, 2005 | : | |
| Attorney Docket No.: 10618.0004 | : | |

This letter is in response to the Petition under 37 C.F.R. 1.181 and 1.144 filed on October 28, 2008 requesting withdrawal of the restriction requirement.

**BACKGROUND**

This application was filed as a national stage application under 35 USC 371 of PCT/FR03/02788 and as such, is eligible for unity of invention practice.

On July 31, 2006, the examiner mailed to applicants a non-final Office action examining all pending Claims 1-12 and 14-16 including claims to methods, claims to products and claim 6 to the particular antibiotics instantly claimed. The claims were rejected under 35 U.S.C. 102 and 35 U.S.C. 103.

On October 25, 2006, the applicant responded to the non-final Office action and filed amendments to the independent claim 1 that listed in the alternative the particular antibiotics of the instant claims.

On January 29, 2007, the examiner mailed to applicants a second non-final Office action rejecting all of the then pending claims and including 4 different rejections set forth under 35 U.S.C 103(a).

On April 30, 2007, the applicant filed a response and amended the claims.

On July 11, 2007, the examiner mailed a Final Office action to applicants, again rejecting all the pending claims.

On January 10, 2008, the applicant filed a request for continued examination, amended claims and presented arguments.

On February 21, 2008, the examiner mailed a restriction requirement separating a first method (claims 52-77) from a second method (claims 78-98). The examiner provided the following reasons for requiring restriction to a single method:

> Invention I is patentably distinct from Invention II since the compounds employed are distinct from each other.

The examiner further stated that there would be a serious burden on the examiner if restriction were not required. The examiner further required various elections of species. Moreover, the examiner considered Claims 17-51 (drawn to gelled culture mediums) to contain new matter and objected to the claims stating they will not be considered. The already examined Claims 17-51 were left out of all groups and not offered to applicants as a choice for election.

March 18, 2008, applicant requested that the Office withdraw the new matter objection and examine the claims 17-51 (the product claims) on the merits. However, in response to the restriction requirement, applicant elected Group I, claims 52-77 (method claims) with traverse and argued that the claims now under restriction had been previously substantively examined together.

On June 13, 2008, the examiner mailed to applicant a non-final Office rejection. The examiner withdrew claims 52-98, including elected claims 52-77, as being drawn to nonelected inventions and withdrew claims 29-30 and 37-51 as being drawn to nonelected species. The examiner stated that Claims 17-28, 31-34 and 36 are drawn to the elected invention and species. The examiner made the restriction requirement Final.

On October 28, 2008, applicants filed this petition to request that the Office reconsider the restriction requirement, responded to the outstanding rejections and filed an Information Disclosure statement.

**DISCUSSION**

The petition, file history and restriction requirement have been carefully considered.

At the onset, it is noted that an application filed as a national stage application under 35 USC 371 is eligible for unity of invention practice. The filing of a request for continued examination does not alter an application's eligibility for unity of invention practice. Any unity of invention requirement set forth in this application should be done so in accordance with PCT unity of invention practice. See PCT International Search and Examination Guidelines Chapter 10, published January 2004 and MPEP Chapter 1800, especially section 1893.

For this reason alone, the restriction requirement mailed 21 February 2008 was improper and will be withdrawn.

A couple other irregularities will be addressed next.

On February 21, 2008, the examiner withdrew already examined claims 17-51 (claims drawn to gelled culture mediums) from consideration because the examiner considered the claims to contain new matter. This was incorrect. The MPEP offers the following guidance on the addition of new matter:

> If new matter is added to the claims, or affects the claims, a rejection under 35 U.S.C. 112, first paragraph, using form paragraph 7.31.01 should be made. If new matter is added only to a claim, an objection using this paragraph should not be made, but the claim should be rejected using form paragraph 7.31.01. As to any other appropriate prior art or 35 U.S.C. 112 rejection, the new matter must be considered as part of the claimed subject matter and cannot be ignored.

While an examiner may object to a specification for containing new matter, any addition of new matter to a claim would require a rejection of the claims for new matter and additional consideration under the remaining statutes.

Moreover, by withdrawing the already examined claims from the restriction requirement groupings, the Office action mailed 21 February 2008 limited the scope of the claims by restriction and prevented applicant from electing the invention that had already been under examination. This is not appropriate.

When faced with the requirement to elect between the process of Group I or Group II, applicants elected Group I with traverse. However, in the next Office action, the examiner failed to examine their elected invention. This is counter to the following guidance in MPEP 818.03:

> Applicant must make his or her own election; the examiner will not make the election for the applicant. 37 CFR 1.142, 37 CFR 1.143.

The claims presented on March 23, 2005 and fully examined on July 31, 2006 are:

> **1. (currently amended) A <u>culture</u> medium for detecting meticillin-resistant microorganisms, comprising~~, besides~~ nutrients for the growth of said microorganisms, an antibiotic chosen from the group of second or third generation cephalosporins, and a chromogenic agent that releases a chromophore after hydrolysis with an enzyme that is active in said microorganisms.**

6. (currently amended) The culture medium as claimed in claim 5, ~~characterized in that~~ wherein said antibiotic is ~~chosen~~ selected from the group consisting of cefoxitin, cefmetazole, moxalactam, cefotetan and flomoxef.

14. (currently amended) A method of detecting meticillin-resistant microorganisms in a sample, comprising the steps ~~consisting in~~ of:

(a)[[-]] inoculating a medium as claimed in ~~one of claims~~ claim 1 ~~to 12~~ with said sample or an inoculum derived from said sample,

(b)[[-]] incubating said medium under conditions that allow growth of said microorganisms,

(c)[[-]] detecting, on said medium, the presence of said meticillin-resistant microorganisms by virtue of the presence of colored colonies.

Claim 1, as pending on April 30, 2007 which had been examined and rejected recited:

1. (Currently Amended) A culture medium for detecting methicillin-resistant Staphylococci aureus (MRSA) directly from a sample from a patient or after an enriching phase, comprising:

nutrients for the growth of said Staphylococci aureus;
an antibiotic chosen from the group consisting of cefamandole, cefoxitin, cefmetazole, moxalactam, cefotetan and flomoxef; and
a chromogenic agent that releases a chromophore after hydrolysis with an enzyme that is active in said microorganisms MRSA.

The instantly pending claims filed on October 28, 2008 are:

17. (New) A gelled culture medium for detecting methicillin-resistant Staphylococcus aureus (MRSA), comprising:

nutrients for the growth of said Staphylococcus aureus;
an antibiotic added to the medium before the medium gels, wherein the antibiotic is cefoxitin, cefmetazole, or moxalactam; and
a chromogenic agent that releases a chromophore after hydrolysis with an enzyme that is active in said MRSA.

37. (New) A gelled culture medium for detecting methicillin-resistant Staphylococcus aureus (MRSA), comprising:

nutrients for the growth of said Staphylococcus aureus;
an antibiotic added to the medium before the medium gels, wherein the antibiotic is flomoxef; and

a chromogenic agent that releases a chromophore after hydrolysis with an enzyme that is active in said MRSA

52. (New) A method of detecting the presence or absence of methicillin- resistant Staphylococcus aureus (MRSA) in a sample from a patient, comprising:

(a) inoculating a medium comprising (i) nutrients for the growth of said MRSA; (ii) an antibiotic, wherein the antibiotic is cefoxitin, cefmetazole, or moxalactam; and (iii) a chromogenic agent that releases a chromophore after hydrolysis with an enzyme that is active in said MRSA, with said sample;

(b) incubating said medium under conditions that allow growth of said MRSA;

(c) detecting, on said medium, the presence or absence of said MRSA by virtue of the presence or absence of colored colonies

78. (New) A method of detecting the presence or absence of methicillin- resistant Staphylococcus aureus (MRSA) in a sample from a patient, comprising:

(a) inoculating a medium comprising (i) nutrients for the growth of said MRSA; (ii) an antibiotic, wherein the antibiotic is flomoxef; and (iii) a chromogenic agent that releases a chromophore after hydrolysis with an enzyme that is active in said MRSA, with said sample;

(b) incubating said medium under conditions that allow growth of said MRSA;

(c) detecting, on said medium, the presence or absence of said MRSA by virtue of the presence or absence of colored colonies.

As shown by the comparison above, the subject matter presently claimed is substantially comparable to the subject matter which had already been under examination.

Turning now to the election of species requirements, on 21 February 2008, the examiner required an election of a single antibiotic. However, during that examination, the examiner has already cited prior art for teaching the third generation cephalosporins which are specifically claimed, such as

cefoxitin and cefmetazole (see Aritaka in the Office action mailed 31 July 2006)
moxalactam (see Felten in the Office action mailed 29 January 2007)
cefoxitin, cefotetan or cefamandole (see Felten in the Office action mailed 29 January 2007)
cefmetazole (see Dorso in the Office action mailed 29 January 2007) and
flomoxef (see Hanaki in the Office action mailed 29 January 2007)

The examiner also required applicants to elect a single chromogenic agent and type of medium, where the medium further comprises one of vancomycin, telcoplanin and/or avoparcin, etc. However, these various types of limitations were already present in the claims that had been already examined.

For all these reasons, the restriction requirement mailed 21 January 2008 is improper.

**DECISION**

The petition is **GRANTED**.

The restriction requirement mailed 21 February 2008 is withdrawn.

Claims 29-30, 35, 37-98 are rejoined with the claims already under examination, and said claims will be examined together (Claims 17-98).

**The application will be forwarded to the examiner for consideration of the papers filed 28 October 2008 and for preparation of a non-final Office action consistent with this decision.**

Should there be any questions about this decision, please contact Special Program Examiner Julie Burke, by letter addressed to Director, Technology Center 1600, at the address listed above, or by telephone at 571-272-1600 or by facsimile sent to the general Office facsimile number, 571-273-8300.

Remy Yucel
Director, Technology Center 1600
jb/jg

UNITED STATES PATENT AND TRADEMARK OFFICE

UNITED STATES DEPARTMENT OF COMMERCE
United States Patent and Trademark Office
Address: COMMISSIONER FOR PATENTS
P.O. Box 1450
Alexandria, Virginia 22313-1450
www.uspto.gov

| APPLICATION NO. | FILING DATE | FIRST NAMED INVENTOR | ATTORNEY DOCKET NO. | CONFIRMATION NO. |
|---|---|---|---|---|
| 10/528,824 | 03/23/2005 | Alain Rambach | 37991-0035 | 6976 |

76191 7590 01/09/2009
David W. Highet, VP and Chief IP Counsel
Becton, Dickinson and Company
(Finnegan Henderson)
1 Becton Drive, MC 110
Franklin Lakes, NJ 07417-1880

| EXAMINER |
|---|
| LILLING, HERBERT J |

| ART UNIT | PAPER NUMBER |
|---|---|
| 1657 | |

| MAIL DATE | DELIVERY MODE |
|---|---|
| 01/09/2009 | PAPER |

**Please find below and/or attached an Office communication concerning this application or proceeding.**

The time period for reply, if any, is set in the attached communication.

JAN 2009

UNITED STATES PATENT AND TRADEMARK OFFICE

Commissioner for Patents
United States Patent and Trademark Office
P.O. Box 1450
Alexandria, VA 22313-1450
www.uspto.gov

JAN 2009

Steven P. O'Connor
FINNEGAN, HENDERSON, FARABOW,
GARRETT & DUNNER, L.L.P
1 BECTON DRIVE, MC 110
FRANKIN LAKES, NJ 07417-1880

| | | |
|---|---|---|
| In re Application of | : | |
| RAMBACH et al. | : | |
| Serial No.: 10/528,824 | : | Decision on Petition |
| Filed: March 23, 2005 | : | |
| Attorney Docket No.: 10618.0004 | : | |

This letter is in response to the Petition under 37 C.F.R. 1.181 and 1.144 filed on October 28, 2008 requesting withdrawal of the restriction requirement.

**BACKGROUND**

This application was filed as a national stage application under 35 USC 371 of PCT/FR03/02788 and as such, is eligible for unity of invention practice.

On July 31, 2006, the examiner mailed to applicants a non-final Office action examining all pending Claims 1-12 and 14-16 including claims to methods, claims to products and claim 6 to the particular antibiotics instantly claimed. The claims were rejected under 35 U.S.C. 102 and 35 U.S.C. 103.

On October 25, 2006, the applicant responded to the non-final Office action and filed amendments to the independent claim 1 that listed in the alternative the particular antibiotics of the instant claims.

On January 29, 2007, the examiner mailed to applicants a second non-final Office action rejecting all of the then pending claims and including 4 different rejections set forth under 35 U.S.C 103(a).

On April 30, 2007, the applicant filed a response and amended the claims.

On July 11, 2007, the examiner mailed a Final Office action to applicants, again rejecting all the pending claims.

On January 10, 2008, the applicant filed a request for continued examination, amended claims and presented arguments.

On February 21, 2008, the examiner mailed a restriction requirement separating a first method (claims 52-77) from a second method (claims 78-98). The examiner provided the following reasons for requiring restriction to a single method:

> **Invention I is patentably distinct from Invention II since the compounds employed are distinct from each other.**

The examiner further stated that there would be a serious burden on the examiner if restriction were not required. The examiner further required various elections of species. Moreover, the examiner considered Claims 17-51 (drawn to gelled culture mediums) to contain new matter and objected to the claims stating they will not be considered. The already examined Claims 17-51 were left out of all groups and not offered to applicants as a choice for election.

March 18, 2008, applicant requested that the Office withdraw the new matter objection and examine the claims 17-51 (the product claims) on the merits. However, in response to the restriction requirement, applicant elected Group I, claims 52-77 (method claims) with traverse and argued that the claims now under restriction had been previously substantively examined together.

On June 13, 2008, the examiner mailed to applicant a non-final Office rejection. The examiner withdrew claims 52-98, including elected claims 52-77, as being drawn to nonelected inventions and withdrew claims 29-30 and 37-51 as being drawn to nonelected species. The examiner stated that Claims 17-28, 31-34 and 36 are drawn to the elected invention and species. The examiner made the restriction requirement Final.

On October 28, 2008, applicants filed this petition to request that the Office reconsider the restriction requirement, responded to the outstanding rejections and filed an Information Disclosure statement.

**DISCUSSION**

The petition, file history and restriction requirement have been carefully considered.

At the onset, it is noted that an application filed as a national stage application under 35 USC 371 is eligible for unity of invention practice. The filing of a request for continued examination does not alter an application's eligibility for unity of invention practice. Any unity of invention requirement set forth in this application should be done so in accordance with PCT unity of invention practice. See PCT International Search and Examination Guidelines Chapter 10, published January 2004 and MPEP Chapter 1800, especially section 1893.

For this reason alone, the restriction requirement mailed 21 February 2008 was improper and will be withdrawn.

A couple other irregularities will be addressed next.

On February 21, 2008, the examiner withdrew already examined claims 17-51 (claims drawn to gelled culture mediums) from consideration because the examiner considered the claims to contain new matter. This was incorrect. The MPEP offers the following guidance on the addition of new matter:

> If new matter is added to the claims, or affects the claims, a rejection under 35 U.S.C. 112, first paragraph, using form paragraph 7.31.01 should be made. If new matter is added only to a claim, an objection using this paragraph should not be made, but the claim should be rejected using form paragraph 7.31.01. As to any other appropriate prior art or 35 U.S.C. 112 rejection, the new matter must be considered as part of the claimed subject matter and cannot be ignored.

While an examiner may object to a specification for containing new matter, any addition of new matter to a claim would require a rejection of the claims for new matter and additional consideration under the remaining statutes.

Moreover, by withdrawing the already examined claims from the restriction requirement groupings, the Office action mailed 21 February 2008 limited the scope of the claims by restriction and prevented applicant from electing the invention that had already been under examination. This is not appropriate.

When faced with the requirement to elect between the process of Group I or Group II, applicants elected Group I with traverse. However, in the next Office action, the examiner failed to examine their elected invention. This is counter to the following guidance in MPEP 818.03:

> Applicant must make his or her own election; the examiner will not make the election for the applicant. 37 CFR 1.142, 37 CFR 1.143.

The claims presented on March 23, 2005 and fully examined on July 31, 2006 are:

> 1. **(currently amended) A <u>culture</u> medium for detecting meticillin-resistant microorganisms, comprising~~, besides~~ nutrients for the growth of said microorganisms, an antibiotic chosen from the group of second or third generation cephalosporins, and a chromogenic agent that releases a chromophore after hydrolysis with an enzyme that is active in said microorganisms.**

6. (currently amended) The culture medium as claimed in claim 5, ~~characterized in that~~ wherein said antibiotic is ~~chosen~~ selected from the group consisting of cefoxitin, cefmetazole, moxalactam, cefotetan and flomoxef.

14. (currently amended) A method of detecting meticillin-resistant microorganisms in a sample, comprising the steps ~~consisting in~~ of:

(a)[[-]] inoculating a medium as claimed in ~~one of claims~~ claim 1 ~~to 12~~ with said sample or an inoculum derived from said sample,

(b)[[-]] incubating said medium under conditions that allow growth of said microorganisms,

(c)[[-]] detecting, on said medium, the presence of said meticillin-resistant microorganisms by virtue of the presence of colored colonies.

Claim 1, as pending on April 30, 2007 which had been examined and rejected recited:

1. (Currently Amended) A culture medium for detecting methicillin-resistant Staphylococci aureus (MRSA) directly from a sample from a patient or after an enriching phase, comprising:

nutrients for the growth of said Staphylococci aureus;
an antibiotic chosen from the group consisting of cefamandole, cefoxitin, cefmetazole, moxalactam, cefotetan and flomoxef; and
a chromogenic agent that releases a chromophore after hydrolysis with an enzyme that is active in said microorganisms MRSA.

The instantly pending claims filed on October 28, 2008 are:

17. (New) A gelled culture medium for detecting methicillin-resistant Staphylococcus aureus (MRSA), comprising:

nutrients for the growth of said Staphylococcus aureus;
an antibiotic added to the medium before the medium gels, wherein the antibiotic is cefoxitin, cefmetazole, or moxalactam; and
a chromogenic agent that releases a chromophore after hydrolysis with an enzyme that is active in said MRSA.

37. (New) A gelled culture medium for detecting methicillin-resistant Staphylococcus aureus (MRSA), comprising:

nutrients for the growth of said Staphylococcus aureus;
an antibiotic added to the medium before the medium gels, wherein the antibiotic is flomoxef; and

a chromogenic agent that releases a chromophore after hydrolysis with an enzyme that is active in said MRSA

52. (New) A method of detecting the presence or absence of methicillin- resistant Staphylococcus aureus (MRSA) in a sample from a patient, comprising:

(a) inoculating a medium comprising (i) nutrients for the growth of said MRSA; (ii) an antibiotic, wherein the antibiotic is cefoxitin, cefmetazole, or moxalactam; and (iii) a chromogenic agent that releases a chromophore after hydrolysis with an enzyme that is active in said MRSA, with said sample;

(b) incubating said medium under conditions that allow growth of said MRSA;

(c) detecting, on said medium, the presence or absence of said MRSA by virtue of the presence or absence of colored colonies

78. (New) A method of detecting the presence or absence of methicillin- resistant Staphylococcus aureus (MRSA) in a sample from a patient, comprising:

(a) inoculating a medium comprising (i) nutrients for the growth of said MRSA; (ii) an antibiotic, wherein the antibiotic is flomoxef; and (iii) a chromogenic agent that releases a chromophore after hydrolysis with an enzyme that is active in said MRSA, with said sample;

(b) incubating said medium under conditions that allow growth of said MRSA;

(c) detecting, on said medium, the presence or absence of said MRSA by virtue of the presence or absence of colored colonies.

As shown by the comparison above, the subject matter presently claimed is substantially comparable to the subject matter which had already been under examination.

Turning now to the election of species requirements, on 21 February 2008, the examiner required an election of a single antibiotic. However, during that examination, the examiner has already cited prior art for teaching the third generation cephalosporins which are specifically claimed, such as

cefoxitin and cefmetazole (see Aritaka in the Office action mailed 31 July 2006)
moxalactam (see Felten in the Office action mailed 29 January 2007)
cefoxitin, cefotetan or cefamandole (see Felten in the Office action mailed 29 January 2007)
cefmetazole (see Dorso in the Office action mailed 29 January 2007) and
flomoxef (see Hanaki in the Office action mailed 29 January 2007)

The examiner also required applicants to elect a single chromogenic agent and type of medium, where the medium further comprises one of vancomycin, telcoplanin and/or avoparcin, etc. However, these various types of limitations were already present in the claims that had been already examined.

For all these reasons, the restriction requirement mailed 21 January 2008 is improper.

**DECISION**

The petition is **GRANTED**.

The restriction requirement mailed 21 February 2008 is withdrawn.

Claims 29-30, 35, 37-98 are rejoined with the claims already under examination, and said claims will be examined together (Claims 17-98).

**The application will be forwarded to the examiner for consideration of the papers filed 28 October 2008 and for preparation of a non-final Office action consistent with this decision.**

Should there be any questions about this decision, please contact Special Program Examiner Julie Burke, by letter addressed to Director, Technology Center 1600, at the address listed above, or by telephone at 571-272-1600 or by facsimile sent to the general Office facsimile number, 571-273-8300.

Remy Yucel
Director, Technology Center 1600
jb/jg

UNITED STATES PATENT AND TRADEMARK OFFICE

UNITED STATES DEPARTMENT OF COMMERCE
United States Patent and Trademark Office
Address: COMMISSIONER FOR PATENTS
P.O. Box 1450
Alexandria, Virginia 22313-1450
www.uspto.gov

CESARI AND MCKENNA, LLP
88 BLACK FALCON AVENUE
BOSTON, MA 02210

Mail Date: 05/03/2010

| | | |
|---|---|---|
| **Applicant** | : Miles Maiden | : DECISION ON REQUEST FOR |
| **Patent Number** | : 7641790 | : RECALCULATION of PATENT |
| **Issue Date** | : 01/05/2010 | : TERM ADJUSTMENT IN VIEW |
| **Application No** | : 10/528,860 | : OF WYETH AND NOTICE OF INTENT TO |
| **Filed** | : 03/23/2005 | : ISSUE CERTIFICATE OF CORRECTION |
| | | : |

The Request for Recalculation is **GRANTED** to the extent indicated.

The patent term adjustment has been determined to be **467** days. The USPTO will *sua sponte* issue a certificate of correction reflecting the amount of PTA days determined by the recalculation.

Prior to the issuance of the certificate of correction, the USPTO will afford patentee an opportunity to be heard and request reconsideration. Accordingly, patentee has **one month or thirty (30) days**, whichever is longer, to file a request for reconsideration of this patent term adjustment calculation. See 35 U.S.C. 154(b)(3)(B)(ii) and 37 CFR 1.322(a)(4). No extensions of time will be granted under 37 CFR 1.136.

Patentee should use document code PET.OP if electronically filing a request for reconsideration of this patent term adjustment calculation. The patentee must also include the information required by 37 CFR 1.705(b)(2) and the fee required by 37 CFR 1.18(e). If patentee does not file a timely request for reconsideration of this patent term adjustment calculation including the information required by 37 CFR 1.705(b)(2) and the fee required by 37 CFR 1.18(e), the USPTO will issue a certificate of correction reflecting the PTA determination noted above.

Patentee should be aware that in order to preserve the right to review in the United States District Court for the District of Columbia of the USPTO patent term adjustment determination, patentee must ensure that he or she also take the steps required under 35 U.S.C. 154(b)(4)(A) in a timely manner. Nothing in the request for recalculation should be construed as providing an alternative time frame for commencing a civil action under 35 U.S.C. 154(b)(4)(A).

Any questions concerning this decision should be directed to the Office of Patent Legal Administration at 571-272-7702.

UNITED STATES PATENT AND TRADEMARK OFFICE

UNITED STATES DEPARTMENT OF COMMERCE
United States Patent and Trademark Office
Address: COMMISSIONER FOR PATENTS
P.O. Box 1450
Alexandria, Virginia 22313-1450
www.uspto.gov

GE HEALTHCARE BIO-SCIENCES CORP.
PATENT DEPARTMENT
101 CARNEGIE CENTER
PRINCETON, NJ 08540

Mail Date: 04/20/2010

| | | |
|---|---|---|
| **Applicant** | : Iuliu-Ioan Blaga | : DECISION ON REQUEST FOR |
| **Patent Number** | : 7651599 | : RECALCULATION of PATENT |
| **Issue Date** | : 01/26/2010 | : TERM ADJUSTMENT IN VIEW |
| **Appliction No** | : 10/528,864 | : OF WYETH AND NOTICE OF INTENT TO |
| **Filed** | : 03/23/2005 | : ISSUE CERTIFICATE OF CORRECTION |
| | | : |

The Request for Recalculation is **GRANTED** to the extent indicated.

The patent term adjustment has been determined to be **1295** days. The USPTO will *sua sponte* issue a certificate of correction reflecting the amount of PTA days determined by the recalculation.

Prior to the issuance of the certificate of correction, the USPTO will afford patentee an opportunity to be heard and request reconsideration. Accordingly, patentee has **one month or thirty (30) days**, whichever is longer, to file a request for reconsideration of this patent term adjustment calculation. See 35 U.S.C. 154(b)(3)(B)(ii) and 37 CFR 1.322(a)(4). No extensions of time will be granted under 37 CFR 1.136.

Patentee should use document code PET.OP if electronically filing a request for reconsideration of this patent term adjustment calculation. The patentee must also include the information required by 37 CFR 1.705(b)(2) and the fee required by 37 CFR 1.18(e). If patentee does not file a timely request for reconsideration of this patent term adjustment calculation including the information required by 37 CFR 1.705(b)(2) and the fee required by 37 CFR 1.18(e), the USPTO will issue a certificate of correction reflecting the PTA determination noted above.

Patentee should be aware that in order to preserve the right to review in the United States District Court for the District of Columbia of the USPTO patent term adjustment determination, patentee must ensure that he or she also take the steps required under 35 U.S.C. 154(b)(4)(A) in a timely manner. Nothing in the request for recalculation should be construed as providing an alternative time frame for commencing a civil action under 35 U.S.C. 154(b)(4)(A).

Any questions concerning this decision should be directed to the Office of Patent Legal Administration at 571-272-7702.

UNITED STATES PATENT AND TRADEMARK OFFICE

UNITED STATES DEPARTMENT OF COMMERCE
United States Patent and Trademark Office
Address: COMMISSIONER FOR PATENTS
P.O. Box 1450
Alexandria, Virginia 22313-1450
www.uspto.gov

GE HEALTHCARE BIO-SCIENCES CORP.
PATENT DEPARTMENT
101 CARNEGIE CENTER
PRINCETON, NJ 08540

Mail Date: 05/17/2010

**Applicant** : Iuliu-Ioan Blaga
**Patent Number** : 7651599
**Issue Date** : 01/26/2010
**Application No** : 10/528,864
**Filed** : 03/23/2005

: NOTICE CONCERNING IMPROPER
: CALCULATION OF PATENT TERM
: ADJUSTMENT BASED UPON USPTO
: IMPROPERLY MEASURING REDUCTION
: PERIOD UNDER 37 CFR 1.704(c)(10).

The United States Patent and Trademark Office (USPTO) discovered that in processing the recent recalculation decisions mailed in response to patentee's filed Request for Recalculation of Patent Term Adjustment in view of Wyeth, the USPTO improperly measured the reduction period for reductions under 37 CFR 1.704(c)(10). Pursuant to 37 CFR 1.704(c)(10), patentee's reduction begins on the date of filing the amendment under 37 CFR 1.312 ("1.312 amendment") or other related paper and ends on the date that the Office mails a response to the filing of the 1.312 amendment or other paper. It has been discovered that during the recalculation, the calculation failed to the limit the reduction to the mail date of the response to the 1.312 amendment or other paper. Accordingly, patentee's reductions were greater than warranted.

This notice **VACATES** the previous GRANTED request for recalculation and provides patentee with a revised GRANTED recalculation.

The patent term adjustment has been determined to be **1335** days. The USPTO will *sua sponte* issue a certificate of correction reflecting the amount of patent term adjustment (PTA) days determined by the recalculation.

Prior to the issuance of the certificate of correction, the USPTO will afford patentee an opportunity to be heard and request reconsideration. Accordingly, patentee has **one month or thirty (30) days** from the mail date of this notice, whichever is longer, to file a request for reconsideration of this PTA calculation. See 35 U.S.C. § 154(b)(3)(B)(ii) and 37 CFR 1.322(a)(4).

Patentee should use document code PET.OP if electronically filing a request for reconsideration of this PTA calculation. The patentee must also include the information required by 37 CFR 1.705(b)(2), and the fee required by 37 CFR 1.18(e). If patentee does not file a timely request for reconsideration of this PTA calculation, including the information required by 37 CFR 1.705(b)(2) and the fee required by 37 CFR 1.18(e), the USPTO will issue a certificate of correction reflecting the PTA determination noted above.

Patentee should be aware that in order to preserve the right of review of the USPTO's PTA determination in the United States District Court for the District of Columbia, patentee must ensure that the steps required under 35 U.S.C. § 154 (b)(4) are taken in a timely manner. Nothing in the request for recalculation should be construed as providing an alternative time frame for commencing a civil action under 35 U.S.C. § 154(b)(4).

28 SEP 2005

UNITED STATES PATENT AND TRADEMARK OFFICE

Commissioner for Patents
United States Patent and Trademark Office
P.O. Box 1450
Alexandria, VA 22313-1450
www.uspto.gov

FISH & NEAVE IP GROUP
ROPES & GRAY LLP
One International Place
Boston, MA 02110-2624

| | | |
|---|---|---|
| In re Application of | : | |
| HALLIDAY *et al* | : | |
| U.S. Application No.: 10/528,875 | : | |
| PCT No.: PCT/GB03/04208 | : | **DECISION** |
| Int. Filing Date: 26 September 2003 | : | |
| Priority Date: 27 September 2002 | : | |
| Attorney Docket No.: CKFW-P01-012 | : | |
| For: WATER-SWELLABLE POLYMERS | : | |

Applicants' "Request for a Corrected Filing Receipt" filed via facsimile on 13 September 2005 is hereby **GRANTED** as follows:

The filing receipt mailed 26 August 2005 listed only four applicants. Two of the applicants (Lilias Currie and Sarah Stewart) were not recorded as applicants.

A review of the international application and declaration shows that the above-captioned application should have six applicants listed.

Accordingly, the filing receipt mailed 26 August 2005 is hereby **VACATED**.

A new filing receipt listing all six applicants will be mailed with this decision.

This application is being forwarded to Tech Center 1700 for further processing.

James Thomson

James Thomson
Attorney Advisor
Office of PCT Legal Administration

Tel.: (571) 272-3302

UNITED STATES PATENT AND TRADEMARK OFFICE

Commissioner for Patents
United States Patent and Trademark Office
P.O. Box 1450
Alexandria, VA 22313-1450
www.uspto.gov

MAILED

SEP 01 2009

OFFICE OF PETITIONS

**HAYES SOLOWAY P.C.**
**3450 E. SUNRISE DRIVE, SUITE 140**
**TUCSON AZ 85718**

| | | |
|---|---|---|
| In re Application of | : | |
| **EBNER,** Peter R. | : | |
| Application No. 10/528,917 | : | DECISION ON PETITION |
| Filed: March 23, 2005 | : | TO WITHDRAW |
| Attorney Docket No. **MAX 02.01CIP** | : | FROM RECORD |
| | : | |

This is a decision on the Request to Withdraw as attorney or agent of record under 37 C.F.R. § 1.36(b), filed March 21, 2008

The request is **APPROVED**.

A grantable request to withdraw as attorney/agent of record must be signed by every attorney/agent seeking to withdraw or contain a clear indication that one attorney is signing on behalf of another/others. A request to withdraw will not be approved unless at least 30 (thirty) days would remain between the date of approval and the later of the expiration date of a time to file a response or the expiration date of the maximum time period which can be extended under 37 C.F.R. § 1.136(a).

The request was signed by G. Peter Albert, Jr. on behalf of all attorneys of record who are associated with customer No. 30542. All attorneys/agents associated with the Customer Number 30542 have been withdrawn. Applicant is reminded that there is no attorney of record at this time.

All future correspondence will be directed to the inventor Peter Ebner at the address indicated below. There is an outstanding Office action mailed February 26, 2008 that requires a reply from the applicant.

Telephone inquiries concerning this decision should be directed to Tredelle Jackson at 571-272-2783.

Tredelle D. Jackson
Paralegal Specialist
Office of Petitions

cc: **MR. PETER EBNER**
**MAXILON LABORTORIES, INC.**
**P.O. BOX 850**
**HOLLIS NH 03049**

UNITED STATES PATENT AND TRADEMARK OFFICE

Commissioner for Patents
United States Patent and Trademark Office
P.O. Box 1450
Alexandria, VA 22313-1450
www.uspto.gov

Orum & Roth
53 West Jackson Blvd.
Suite 1616
Chicago IL 60604

COPY MAILED

SEP 28 2006

OFFICE OF PETITIONS

| | | |
|---|---|---|
| In re Application of | : | |
| Frank Grau et al | : | |
| Application No. 10/528,929 | : | DECISION ON PETITION |
| Filed: March 23, 2005 | : | TO WITHDRAW |
| Attorney Docket No. 14116 | : | FROM RECORD |
| | : | |

This is a decision on the Request to Withdraw as attorney or agent of record under 37 C.F.R. § 1.36(b), filed July 16, 2006.

The request is **APPROVED**.

A review of the file record indicates that Catherine L. Glemrich: (1) does not have power of attorney in this patent application; and (2) has been employed or otherwise engaged in the proceedings in this patent application. In view of the present decision, Catherine L. Glemrich has been withdrawn from the present application and may not prepare or submit papers under 37 C.F.R. § 1.34, or correspond in any manner in this application unless appointed in an acceptable power of attorney under 37 C.F.R. § 1.32(b).

The request was signed by Catherine L. Glemrich attorney/agent of record on behalf of herself.

Catherine L. Glemrich has been withdrawn as attorney or agent of record; all other attorneys remain of record.

All future communications from the Office will continue to be directed to the above-listed address until otherwise properly notified by the applicant.

Telephone inquiries concerning this decision should be directed to Charles Smoot at 571-272-3299.

David Bucci
Petitions Examiner
Office of Petitions

UNITED STATES PATENT AND TRADEMARK OFFICE

Commissioner for Patents
United States Patent and Trademark Office
P.O. Box 1450
Alexandria, VA 22313-1450
www.uspto.gov

**John W McIlvaine**
**Webb Ziesenheim Logsdon Orkin & Hanson**
**436 Seventh Avenue**
**700 Koppers Building**
**Pittsburgh PA 15219-1818**

COPY MAILED

NOV 06 2008

OFFICE OF PETITIONS

In re Application of :
Mirko LEHMANN et al. :
Application No. 10/528,954 : DECISION ON PETITION
Filed: March 22, 2005 :
Attorney Docket No 4587-048041 :

This is a decision on the petition, filed August 11, 2008, under 37 CFR 1.181 to withdraw the holding of abandonment and under the unintentional provisions of 37 CFR 1.137(b) to revive the above-identified application

The petition under 37 CFR 1.137(b) is **GRANTED**.

The petition under 37 CFR 1.181 is **DISMISSED**.

This application became abandoned for failure to timely pay the issue and publication fees on or before June 19, 2008, as required by the Notice of Allowance and Fee(s) Due (Notice), mailed March 19, 2008. Accordingly, the date of abandonment of this application is June 20, 2008.

The petition satisfies the requirements of 37 CFR 1.137(b) in that petitioner has supplied (1) the reply in the form of payment of the publication fee of $300, (2) the petition fee of $1540; and (3) a proper statement of unintentional delay. Accordingly the publication fee is accepted as having been unintentionally delayed.

The publication fee of $300 as well as the petition fee of $1540 has been charged to deposit account 23-0650.

The petition further included a reply which was a petition to withdraw the holding of abandonment which asserted there was a standing authorization to make payment of the correct fees from the Deposit account referencing 37 CFR 1.311(b).

37 CFR 1.311(b) provides that:

> 1.311 Notice of Allowance.
> (b) An authorization to charge the issue fee or other post-allowance fees set forth in § 1.18 to a deposit account may be filed in an individual application only after

mailing of the notice of allowance. The submission of either of the following after the mailing of a notice of allowance will operate as a request to charge the correct issue fee or any publication fee due to any deposit account identified in a previously filed authorization to charge such fees:

(1) An incorrect issue fee or publication fee; or

(2) A fee transmittal form (or letter) for payment of issue fee or publication fee.

However while review of the application confirms that a fee transmittal form or letter, PART B-FEE(S) TRANSMITTAL, filed May 30, 2008 indicated not only the above identified issue fee but also the publication fee, i.e. $300, was being submitted with payment by credit card, such also confirms that the neither the Electronic Patent Application Fee Transmittal and the Electronic Acknowledgment Receipt of May 30, 2008 included such payment of the publication fee, i.e. the payment of $0 rather than $300, due to oversight on the part of Mr. McIlvaine's assistant nor did any other previously filed charge authorization, e.g. previously filed fee transmittals, authorize the charge of "such fees", i.e. authorize the charge of the issue fee or other post allowance fees and/or fees set forth in 1.18. As, there was no standing authorization to charge the publication fee in compliance with 37 CFR 1.311(b) of record in the application prior to June 20, 2008, the request to withdraw the holding of abandonment under 37 CFR 1.181 is dismissed.

Telephone inquiries concerning this decision should be directed to Karin Reichle at (571) 272-6051.

This application is being referred to Publishing Division for processing into a patent.

David Bucci
Petitions Examiner
Office of Petitions

UNITED STATES PATENT AND TRADEMARK OFFICE

UNITED STATES DEPARTMENT OF COMMERCE
United States Patent and Trademark Office
Address: COMMISSIONER FOR PATENTS
P.O. Box 1450
Alexandria, Virginia 22313-1450
www.uspto.gov

DORITY & MANNING, P.A.
POST OFFICE BOX 1449
GREENVILLE, SC 29602-1449

Mail Date: 04/21/2010

| | | |
|---|---|---|
| **Applicant** | : Ulrich Ebbeskotte | : DECISION ON REQUEST FOR |
| **Patent Number** | : 7600818 | : RECALCULATION of PATENT |
| **Issue Date** | : 10/13/2009 | : TERM ADJUSTMENT IN VIEW |
| **Appliction No** | : 10/528,958 | : OF WYETH AND NOTICE OF INTENT TO |
| **Filed** | : 01/17/2006 | : ISSUE CERTIFICATE OF CORRECTION |
| | | : |

The Request for Recalculation is **GRANTED** to the extent indicated.

The patent term adjustment has been determined to be **31** days. The USPTO will *sua sponte* issue a certificate of correction reflecting the amount of PTA days determined by the recalculation.

Prior to the issuance of the certificate of correction, the USPTO will afford patentee an opportunity to be heard and request reconsideration. Accordingly, patentee has **one month or thirty (30) days**, whichever is longer, to file a request for reconsideration of this patent term adjustment calculation. See 35 U.S.C. 154(b)(3)(B)(ii) and 37 CFR 1.322(a)(4). No extensions of time will be granted under 37 CFR 1.136.

Patentee should use document code PET.OP if electronically filing a request for reconsideration of this patent term adjustment calculation. The patentee must also include the information required by 37 CFR 1.705(b)(2) and the fee required by 37 CFR 1.18(e). If patentee does not file a timely request for reconsideration of this patent term adjustment calculation including the information required by 37 CFR 1.705(b)(2) and the fee required by 37 CFR 1.18(e), the USPTO will issue a certificate of correction reflecting the PTA determination noted above.

Patentee should be aware that in order to preserve the right to review in the United States District Court for the District of Columbia of the USPTO patent term adjustment determination, patentee must ensure that he or she also take the steps required under 35 U.S.C. 154(b)(4)(A) in a timely manner. Nothing in the request for recalculation should be construed as providing an alternative time frame for commencing a civil action under 35 U.S.C. 154(b)(4)(A).

Any questions concerning this decision should be directed to the Office of Patent Legal Administration at 571-272-7702.

## SPE RESPONSE FOR CERTIFICATE OF CORRECTION

DATE : 1/25/10

Paper No.: ____

TO SPE OF : ART UNIT 3636

SUBJECT : Request for Certificate of Correction for Appl. No.: 10/528958 Patent No.: 7600818 B2

Please respond to this request for a certificate of correction within 7 days.

**FOR IFW FILES:**

Please review the requested changes/corrections as shown in the **COCIN** document(s) in the IFW application image. No new matter should be introduced, nor should the scope or meaning of the claims be changed.

Please complete the response (see below) and forward the completed response to scanning using document code **COCX**.

**FOR PAPER FILES:**

Please review the requested changes/corrections as shown in the attached certificate of correction. Please complete this form (see below) and forward it with the file to:

**Certificates of Correction Branch (CofC)**
**Randolph Square – 9D10-A**
**Palm Location 7580**

Virginia Tolbert
**Certificates of Correction Branch**
571-272-0460

**Thank You For Your Assistance**

**The request for issuing the above-identified correction(s) is hereby:**
Note your decision on the appropriate box.

- [x] **Approved** — All changes apply.
- [ ] **Approved in Part** — Specify below which changes **do not** apply.
- [ ] **Denied** — State the reasons for denial below.

**Comments:** _____

5/13/2010

DAVID DUNN
SUPERVISORY PATENT EXAMINER 3636

29 JUN 2005

UNITED STATES PATENT AND TRADEMARK OFFICE

Commissioner for Patents
United States Patent and Trademark Office
P.O. Box 1450
Alexandria, VA 22313-1450
www.uspto.gov

10/528965

Thomas D. Helmholdt
YOUNG & BASILE P.C.
3001 W. Big Beaver Road, Suite 624
Troy, Michigan 48084

In re Application of
TAUBMAN, David L. *et al*
Application No.: 10/528,965
PCT No.: PCT/AU03/01233
Int. Filing Date: 19 September 2003
Priority Date: 20 September 2002
Attorney's Docket No.: HAK-100-A
For: METHOD OF SIGNALLING MOTION INFORMATION FOR EFFICIENT SEALABLE VIDEO COMPRESSION

**DECISION**

This application is before the Office of PCT Legal Administration for matters arising under 35 U.S.C. 371.

## BACKGROUND

On 18 March 2005, applicants filed papers to enter the national stage of PCT/AU03/01233 using docket number HAK-100-A which was accompanied by, *inter alia*, a preliminary amendment, fees to enter the national stage and authorization to charge any additional fees or credit any fees to Deposit Account No. 25-0115. This application was given U.S. application number 10/528,965.

On 21 March 2005, a duplicate national stage application for PCT/AU03/01233 - 100-A was filed by the same firm. Applicants paid fees in the amount of $1,160.00 for this application. The U.S. application number was denoted as 10/528,609.

On 13 May 2005, applicants requested to withdraw the duplicate national stage application ("10/528,609") and obtain a refund of all fees paid in the second application.

## DISCUSSION

As is evident from the above recited facts, two sets of papers to enter the national stage were submitted for international application PCT/AU03/01233. The end result for an international application designating the United States of America is a single U.S. national stage application.

Therefore, the submission of two sets of national stage papers to enter the United States was improper.

## CONCLUSION

Both applications will be merged into one national stage application for PCT/AU03/01233.

Applicants are advised that U.S. application No. 10/528,609 is no longer a valid U.S. National stage application. Applicants must use only U.S. application No. **10/528,965** for all correspondence to the national stage application of PCT/AU03/01233. The attorney docket number is HAK-100-A.

The $1,160.00 in fees paid in U.S. application No. 10/528,609 have been credited back to Deposit Account No. 25-0115 as requested.

This application is being forwarded to the National Stage Processing Division of the Office of PCT Operations for continued processing.

James Thomson

James Thomson
Attorney Advisor
Office of PCT Legal Administration

Tel.: (571) 272-3302

UNITED STATES PATENT AND TRADEMARK OFFICE

UNITED STATES DEPARTMENT OF COMMERCE
United States Patent and Trademark Office
Address: COMMISSIONER FOR PATENTS
P.O. Box 1450
Alexandria, Virginia 22313-1450
www.uspto.gov

William S Frommer
Frommer Lawrence & Haug
745 Fifth Avenue
New York, NY 10151

Mail Date: 04/21/2010

| | | |
|---|---|---|
| **Applicant** | : Keisuke Okamura | : DECISION ON REQUEST FOR |
| **Patent Number** | : 7609320 | : RECALCULATION of PATENT |
| **Issue Date** | : 10/27/2009 | : TERM ADJUSTMENT IN VIEW |
| **Appliction No** | : 10/528,968 | : OF WYETH AND NOTICE OF INTENT TO |
| **Filed** | : 03/23/2005 | : ISSUE CERTIFICATE OF CORRECTION |
| | | : |

The Request for Recalculation is **GRANTED** to the extent indicated.

The patent term adjustment has been determined to be **971** days. The USPTO will *sua sponte* issue a certificate of correction reflecting the amount of PTA days determined by the recalculation.

Prior to the issuance of the certificate of correction, the USPTO will afford patentee an opportunity to be heard and request reconsideration. Accordingly, patentee has **one month or thirty (30) days**, whichever is longer, to file a request for reconsideration of this patent term adjustment calculation. See 35 U.S.C. 154(b)(3)(B)(ii) and 37 CFR 1.322(a)(4). No extensions of time will be granted under 37 CFR 1.136.

Patentee should use document code PET.OP if electronically filing a request for reconsideration of this patent term adjustment calculation. The patentee must also include the information required by 37 CFR 1.705(b)(2) and the fee required by 37 CFR 1.18(e). If patentee does not file a timely request for reconsideration of this patent term adjustment calculation including the information required by 37 CFR 1.705(b)(2) and the fee required by 37 CFR 1.18(e), the USPTO will issue a certificate of correction reflecting the PTA determination noted above.

Patentee should be aware that in order to preserve the right to review in the United States District Court for the District of Columbia of the USPTO patent term adjustment determination, patentee must ensure that he or she also take the steps required under 35 U.S.C. 154(b)(4)(A) in a timely manner. Nothing in the request for recalculation should be construed as providing an alternative time frame for commencing a civil action under 35 U.S.C. 154(b)(4)(A).

Any questions concerning this decision should be directed to the Office of Patent Legal Administration at 571-272-7702.

UNITED STATES PATENT AND TRADEMARK OFFICE

Commissioner for Patents
United States Patent and Trademark Office
P.O. Box 1450
Alexandria, VA 22313-1450
www.uspto.gov

MAIL

FEB 0 1 2007

DIRECTOR OFFICE
TECHNOLOGY CENTER 2600

SNELL & WILMER L.L.P.
600 ANTON BOULEVARD
SUITE 1400
COSTA MESA CA 92626

In re Application of
Wataru Ikeda, et al.
Application No. 10/528,969
Filed: October 3, 2005
For: **REPRODUCTION DEVICE, OPTICAL DISC, RECORDING MEDIUM, PROGRAM, AND REPRODUCTION METHOD**

DECISION ON PETITION TO MAKE SPECIAL

This is a decision on the petition filed July 20, 2005 and supplemented on November 22, 2006 under Manual of Patent Examination Procedure §708.02, VIII requesting accelerated examination.

The petition under Manual of Patent Examination Procedure §708.02, VIII, must:
(1) be filed prior to receiving any examination by the examiner,
(2) be accompanied by the required fee- $130,
(3) the claims should be directed to a single invention (if it is determined that the claims pertain to more than one invention, then applicant will have to make an election without traverse or forfeit accelerated examination status),
(4) state that a pre-examination search was made, and fully discuss the search method employed, such as classes and subclasses searched, publications, Chemical abstracts, patents, etc. A search made by a foreign patent office satisfies this requirement,
(5) be accompanied by a copy of each of the references most closely related to the subject matter encompassed by the claims if said references are not already of record,
(6) fully discuss the references, pointing out with the particularity required by 37 C.F.R. §1.111 (b) and (c), how the claimed subject matter is patentable over the references.

The petitioner meets all the above-listed requirements. Accordingly, the petition is **GRANTED**.

The application will retain its special status throughout its entire prosecution, including any appeal to the Board of Patent Appeals and Interferences, subject only to diligent prosecution by the applicant. The application file is being forwarded to the examiner for appropriate action in due course.

Krista Zele
Quality Assurance Specialist
Technology Center 2600
Communications

UNITED STATES PATENT AND TRADEMARK OFFICE

Commissioner for Patents
United States Patent and Trademark Office
P.O. Box 1450
Alexandria, VA 22313-1450
www.uspto.gov

Paper No.

PANASONIC PATENT CENTER
1130 CONNECTICUT AVENUE NW, SUITE 1100
WASHINGTON DC 20036

MAILED

JUL 08 2010

OFFICE OF PETITIONS

| | |
|---|---|
| In re Patent No. 7,639,923 | : DECISION ON REQUEST |
| Ikeda et al. | : FOR |
| Issue Date: 12/29/2009 | : RECONSIDERATION OF |
| Application No. 10/528969 | : PATENT TERM ADJUSTMENT |
| Filed: 10/03/2005 | : and |
| Atty Docket No. | : NOTICE OF INTENT TO ISSUE |
| P31939-03 | : CERTIFICATE OF CORRECTION |

This is a decision on the petition filed on January 20, 2010, which is being treated as a request for reconsideration under 37 CFR 1.705(d) requesting that the patent term adjustment indicated on the above-identified patent be corrected to indicate that the term of the above-identified patent is extended or adjusted by five hundred seventy-three (573) days. As clarified below, the petition will be treated as a petition requesting that the patent term adjustment indicated on the above-identified patent be corrected to indicate that the term of the above-identified patent is extended or adjusted by six hundred eighty-eight (688) days.

The petition to correct the patent term adjustment indicated on the above-identified patent to indicate that the term of the above-identified patent is extended or adjusted by six hundred eighty-eight (688) days is **GRANTED to the extent indicated herein**.

The "B" delay period is 190 days, not 75 days as calculated by patentee. 37 CFR 1.702(b) states that the period of adjustment under 35 U.S.C. 154(b) is the period beginning three years after the date on which an application was filed under 35 U.S.C. 111(a), or the national stage commenced under 35 U.S.C. 371(b) or (f) in an international application. This application was filed pursuant to 35 U.S.C. 371(b), not under 35 U.S.C. 111(a), and the national stage commenced on March 25, 2005. Further, the period from the date the Request for Continued Examination was filed to the issue date of the patent is not included in the "B" delay period. See 35 U.S.C. 154(b)(1)(B)(i). Thus, the period of delay is 267 days, counting the number of days beginning on March 26, 2008, the day after the date three years after the national stage commenced, and ending on December 17, 2008, the day before the date the Request for Continued Examination was filed. See 1.703(b). Considering the overlap of 77 days, from March 26, 2008, the day after the date three years from the date the national stage commenced to June 10, 2008, the date a non-final Office action was mailed, the non-overlapping period of adjustment is 190 (267 – 77) days.

The Office will *sua sponte* issue a certificate of correction. Pursuant to 37 CFR 1.322, the Office will not issue a certificate of correction without first providing assignee or patentee an opportunity to be heard. Accordingly, patentees are given **one (1) month or thirty (30) days,** whichever is longer, from the mail date of this decision to respond. No extensions of time will be granted under § 1.136.

Nothing in this decision shall be construed as a waiver of the requirement of 35 U.S.C. 154(b)(4) that any civil action by an applicant dissatisfied with a determination made by the Director under 35 U.S.C. 154(b)(3) be filed in the United States District Court for the District of Columbia within 180 days after the grant of the patent.

The Office acknowledges submission of the $200.00 fee set forth in 37 CFR 1.18(e). No additional fees are required.

The application is being forwarded to the Certificates of Correction Branch for issuance of a certificate of correction. The Office will issue a certificate of correction indicating that the term of the above-identified patent is extended or adjusted by **six hundred eighty-eight (688)** days.

Telephone inquiries specific to this matter should be directed to the undersigned at (571) 272-3231.

DWood

Douglas I. Wood
Senior Petitions Attorney
Office of Petitions

Enclosure: Copy of DRAFT Certificate of Correction

UNITED STATES PATENT AND TRADEMARK OFFICE

# CERTIFICATE OF CORRECTION

PATENT : 7,639,923 B2

DATED : **Dec. 29, 2009** **DRAFT**

INVENTOR(S) : Ikeda et al.

It is certified that error appears in the above-identified patent and that said Letters Patent is hereby corrected as shown below:

On the cover page,

[*] Notice: Subject to any disclaimer, the term of this patent is extended or adjusted under 35 USC 154(b) by 498 days.

Delete the phrase "by 498 days" and insert – by 688 days--

UNITED STATES PATENT AND TRADEMARK OFFICE

COMMISSIONER FOR PATENTS
UNITED STATES PATENT AND TRADEMARK OFFICE
WASHINGTON, DC 20231
www.uspto.gov

MAILED

FEB 2 6 2007

Technology Center 2100

RATNERPRESTIA
P O BOX 980
VALLEY FORGE PA 19482-0980

In re Application of:
**HAJIME MAEKAWA**
Application No. **10/528,978**
Filed: **March 23, 2005**
For: **INFORMATION PROCESSING APPARATUS AND RECEIVING APPARATUS**

DECISION ON PETITION TO MAKE SPECIAL

This is a decision on the petition, filed August 24, 2006 under M.P.E.P. § 708.02(VIII): Accelerated Examination, to make the above-identified application special.

M.P.E.P. § 708.02, Section VIII which sets out the prerequisites for a grantable petition for Accelerated Examination under 37 C.F.R. § 102(d) states in relevant part:

A new application (one which has not received any examination by the examiner) may be granted special status provided that applicant (and this term includes applicant's attorney or agent) complies with each of the following items:

(A) Submits a petition to make special accompanied by the fee set forth in 37 CFR 1.17(i);

(B) Presents all claims directed to a single invention, or if the Office determines that all the claims presented are not obviously directed to a single invention, will make an election without traverse as a prerequisite to the grant of special status;

(C) Submits a statement(s) that a pre-examination search was made, listing the field of search by class and subclass, publication, Chemical Abstracts, foreign patents, etc. A search made by a foreign patent office satisfies this requirement;

(D) Submits one copy each of the references deemed most closely related to the subject matter encompassed by the claims if said references are not already of record; and

(E) Submits a detailed discussion of the references, which discussion points out, with the particularity required by 37 CFR 1.111 (b) and (c), how the claimed subject matter is patentable over the references.

In those instances where the request for this special status does not meet all the prerequisites set forth above, applicant will be notified and the defects in the request will be stated. The application will remain in the status of a new application awaiting action in its regular turn. In those instances where a request is defective in one or more respects, applicant will be given one opportunity to perfect the request in a renewed petition to make special. If perfected, the request will then be granted. If not perfected in the first

renewed petition, any additional renewed petitions to make special may or may not be considered at the discretion of the Group Special Program Examiner.

Applicant's submission is deficient in that it does not comply with item (E) above. That is, no clear indication is given specifically pointing out how the language of claims 1, and 35-40 patentably distinguishes from the references.
First, it is noted that Claims 3 and 6, referred to in the petition (see Appendix), have been canceled. These claims are no longer pending in the present application (see preliminary amendment filed on August 29, 2006).
The petition fails to provide a discussion of how amended claim 1 and new claims 35-40 are "patentable over the references."
Applicant states, "[t]he claimed features referred to above are neither disclosed nor suggested by the reference cited in the Search Report." The petition merely includes a general recitation of the claimed features of the claims without any explanation or discussion of how these claims distinguish over the references. That is, there is no "detailed discussion of the references, which discussion points out, with the particularity required by 37 CFR 1.111 (b) and (c), how the claimed subject matter is patentable over the references." With regard to each of the references listed in the Information Disclosure Statement (IDS), Applicant fails to provide a detailed discussion of the claims are patentable over these references. The discussions of the references fail to comply with the requirements of 37 CFR 1.111 (b) and (c), in that they do not address the claimed limitations of the pending claims.

Accordingly, the Petition is **DISMISSED**. The application file is being forwarded to Central Files to await examination in its proper turn based on its effective filing date.

Any request for reconsideration must be filed within two months of the mailing date of this decision.

John Follansbee
WQAS
Technology Center 2100
571-272-3964

## SPE RESPONSE FOR CERTIFICATE OF CORRECTION

DATE : ~~9/17/09~~ 9/24/09 **Paper No.:** ——

TO SPE OF : ART UNIT 1796 10/528984 7202326

SUBJECT : Request for Certificate of Correction for Appl. No.: ~~10/547350~~ Patent No.: ~~7538176B2~~

Please respond to this request for a certificate of correction within 7 days.

**FOR IFW FILES:**

Please review the requested changes/corrections as shown in the **COCIN** document(s) in the IFW application image. No new matter should be introduced, nor should the scope or meaning of the claims be changed.

Please complete the response (see below) and forward the completed response to scanning using document code **COCX**.

**FOR PAPER FILES:**

Please review the requested changes/corrections as shown in the attached certificate of correction. Please complete this form (see below) and forward it with the file to:

**Certificates of Correction Branch (C of C)**
**Randolph Square 9D62-B**
**Palm Location 7580**

Virginia Tolbert
**Certificates of Correction Branch**
**703-756-1591**

**Thank You For Your Assistance**

**The request for issuing the above-identified correction(s) is hereby:**
Note your decision on the appropriate box.

- ☒ **Approved** — **All** changes apply.
- ☐ **Approved in Part** — Specify below which changes **do not** apply.
- ☐ **Denied** — State the reasons for denial below.

**Comments:** _____

[signature] 1796
**SPE** **Art Unit**

UNITED STATES PATENT AND TRADEMARK OFFICE

Commissioner for Patents
United States Patent and Trademark Office
P.O. Box 1450
Alexandria, VA 22313-1450
www.uspto.gov

BIRCH STEWART KOLASCH & BIRCH
PO BOX 747
FALLS CHURCH VA 22040-0747

COPY MAILED

MAR 13 2009

OFFICE OF PETITIONS

ON PETITION

In re Patent No. 7407783 :
Issue Date: 08/05/2008 :
Application No. 10/528992 :
Filed: 01/10/2006 :
Attorney Docket No. 0020-5361PUS1 :

This is a decision on the petition filed November 17, 2008, which is being treated as a request under 37 CFR 3.81(b)[1] to correct the name of the assignee on the front page of the above-identified patent by way of a Certificate of Correction.

The request is **GRANTED**.

Telephone inquiries concerning this decision may be directed to the undersigned at (571) 272-3231. Inquiries regarding the issuance of a certificate of correction should be directed to the Certificate of Correction Branch at (571) 272-4200.

The Certificates of Correction Branch will be notified of this decision granting the petition under 37 CFR 3.81(b) and directing issuance of the requested Certificate of Correction.

D Wood

Douglas Wood
Senior Petitions Attorney
Office of Petitions

[1] *See* MPEP 1309, subsection II; and Official Gazette of June 22, 2004.

UNITED STATES PATENT AND TRADEMARK OFFICE

Commissioner for Patents
United States Patent and Trademark Office
P.O. Box 1450
Alexandria, VA 22313-1450
www.uspto.gov

JUL 15 2008

BIRCH STEWART KOLASCH & BIRCH
PO BOX 747
FALLS CHURCH VA 22040-0747

In re Application of:
Mikkonen et al.
Serial No.: 10/528,993
Filed: March 24, 2005
Attorney Docket No.: 0365-0624PUS1

DECISION ON PETITION TO RESET REPLY PERIOD

This is in response to applicants' petition under 37 CFR. § 1.181(a), filed on May 23, 2008, to review and grant a new shortened statutory period to expire three months from the notification date of May 8, 2008.

A review of the file history shows that the examiner electronically mailed an Office action to applicants on May 8, 2008, setting a three-month shortened statutory time period for reply.

Applicants state that although the outstanding Office action indicates the date of notification to be March 24, 2008, the actual date of notification to applicants was May 8, 2008, the image date of the outstanding Office action. Based on the evidence presented, it is concluded that applicants' notification date should be reset to May 8, 2008.

Applicants' petition is **GRANTED**.

Should there be any questions about this decision, please contact Marianne C. Seidel by letter addressed to Director, TC 1600, at the address listed above, or by telephone at 571-272-0584 or by facsimile at 703-872-9306.

Marianne C. Seidel
Quality Assurance Specialist/Program Manager
Technology Center 1600

05 MAY 2005

#7

UNITED STATES PATENT AND TRADEMARK OFFICE

Commissioner for Patents
United States Patent and Trademark Office
P.O. Box 1450
Alexandria, VA 22313-1450
www.uspto.gov

Deborah G. VandenHoff
Van Tassell & Associates
P.O. Box 2928
Bellaire, TX 77402-2928

| | | |
|---|---|---|
| In re Application of | : | |
| MONNIER | : | DECISION ON PETITION |
| Serial No.: 10/528,995 | : | |
| PCT No.: PCT/CH02/00151 | : | UNDER 37 CFR 1.10(e) |
| Int. Filing Date: 13 March 2002 | : | |
| Priority Date: 20 March 2001 | : | |
| Atty Docket No.: GLN-031US | : | |
| For: WATCH MOVEMENT | : | |

This decision is in response to applicant's correspondence filed 14 March 2005 in the United States Patent and Trademark Office (USPTO). The correspondence is being treated as a petition under 37 CFR 1.10(e). No petition fee is required.

## BACKGROUND

On 13 March 2002, applicant filed international application PCT/CH02/00151 which claimed priority to an earlier application filed 20 March 2001. A copy of the international application was communicated to the United States Patent and Trademark Office from the International Bureau on 26 September 2002. The thirty-month period for paying the basic national fee in the United States expired at midnight on 20 September 2003.

On 14 March 2005, applicant filed papers purporting to be a 19 September 2003 United States National stage filing for the above-identified international application. The papers are being treated as a petition under 37 CFR 1.10(e).

## DISCUSSION

37 CFR 1.10(e) states:

Any person mailing correspondence addressed as set out in § 1.1(a) to the Office with sufficient postage utilizing the "Express Mail Post Office to Addressee" service of the USPS but not received by the Office, may petition the Director to consider such correspondence filed in the Office on the USPS deposit date, provided that:

(1) The petition is filed promptly after the person becomes aware that the Office has no evidence of receipt of the correspondence;

(2) The number of the "Express Mail" mailing label was placed on the paper(s) or fee(s) that

constitute the correspondence prior to the original mailing by "Express Mail";

(3) The petition includes a copy of the originally deposited paper(s) or fee(s) that constitute the correspondence showing the number of the "Express Mail" mailing label thereon, a copy of any returned postcard receipt, a copy of the "Express Mail" mailing label showing the "date-in," a copy of any other official notation by the USPS relied upon to show the date of deposit, and, if the requested filing date is a date other than the "date-in" on the "Express Mail" mailing label or other official notation entered by the USPS, a showing pursuant to paragraph (d)(3) of this section that the requested filing date was the date the correspondence was deposited in the "Express Mail Post Office to Addressee" service prior to the last scheduled pickup for that day; and

(4) The petition includes a statement which establishes, to the satisfaction of the Director, the original deposit of the correspondence and that the copies of the correspondence, the copy of the "Express Mail" mailing label, the copy of any returned postcard receipt, and any official notation entered by the USPS are true copies of the originally mailed correspondence, original "Express Mail" mailing label, returned postcard receipt, and official notation entered by the USPS.

Applicant has satisfied items 1 and 2 above.

As to item (3), applicant has not provided a copy of the "Express Mail" mailing label for the papers purported to have been filed on 19 September 2003. This is especially important in the present case as the USPS track and confirm database does not show any information for U.S. Express Mail number "ER275611307US"; the Express Mail number which appears on the transmittal letter. As such, there is presently no evidence that the original papers were in fact deposited for mailing on 19 September 2003.

Regarding item (4), applicant states that "enclosed is a copy of the submission originally filed in the U.S. Patent Office under 35 U.S.C. § 371 on September 19, 2003." However, applicant has not attested that the copies filed on 14 March 2005 are a true and complete copy of the original papers filed. In addition, applicant has not provided a statement from an individual with firsthand knowledge of the preparation and depositing of the Express Mail package.

In light of the above, it is not possible to grant applicant's petition under 37 CFR 1.10(e) at this time.

## CONCLUSION

For the reasons stated above, applicant's petition under 37 CFR 1.10(e) is **DISMISSED**.

Any reconsideration on the merits of this petition must be filed within **TWO (2) MONTHS** from the mail date of this decision. Any reconsideration request should include a cover letter entitled "Renewed Petition Under 37 CFR 1.10(e)." No additional petition fee is required. Extensions of time may be obtained under 37 CFR 1.136(a).

Any further correspondence with respect to this matter should be directed to Mail Stop PCT, Commissioner for Patents, Office of PCT Legal Administration, P.O. Box 1450, Alexandria, Virginia 22313-1450, with the contents of the letter marked to the attention of the Office of PCT Legal Administration

Derek A. Putonen
Attorney Advisor
Office of PCT Legal Administration
Tel: 571-272-3294
Fax: 571-273-0459

31 MAY 2005

#5

UNITED STATES PATENT AND TRADEMARK OFFICE

COMMISSIONER FOR PATENTS
UNITED STATES PATENT AND TRADEMARK OFFICE
P.O. BOX 1450
ALEXANDRIA, VA 22313-1450
www.uspto.gov

Deborah G. VandenHoff
Van Tassel & Associates
P.O. Box 2928
Bellaire, TX 77402-2928

| | | |
|---|---|---|
| In re Application of | : | |
| WIEDERRECHT, et al. | : | |
| U.S. Application No.: 10/528,995 | : | DECISION ON PETITION |
| PCT No.: PCT/CH02/00151 | : | |
| Int. Filing Date: 13 March 2002 | : | UNDER 37 CFR 1.10(e) |
| Priority Date: 20 March 2001 | : | |
| Attorney Docket No.: GLN-031US | : | |
| For: WATCH MOVEMENT | : | |

This is a decision on applicant's papers filed 25 May 2005 in the United States Patent and Trademark Office (USPTO). The papers are being treated as a renewed petition under 37 CFR 1.10(e). No petition fee is required.

## BACKGROUND

On 05 May 2005, applicant was mailed a decision dismissing applicant's petition under 37 CFR 1.10(e) to accept the papers filed 14 March 2005 as having been filed 19 September 2003. Applicant was afforded two months to file any request for reconsideration.

On 25 May 2005, applicant filed the present renewed petition.

## DISCUSSION

As detailed in the decision mailed 05 May 2005,

37 CFR 1.10(e) states:

> Any person mailing correspondence addressed as set out in § 1.1(a) to the Office with sufficient postage utilizing the "Express Mail Post Office to Addressee" service of the USPS but not received by the Office, may petition the Commissioner to consider such correspondence filed in the Office on the USPS deposit date, provided that:
>
> (1) The petition is filed promptly after the person becomes aware that the Office has no evidence of receipt of the correspondence;
>
> (2) The number of the "Express Mail" mailing label was placed on the paper(s) or fee(s) that constitute the correspondence prior to the original mailing by "Express Mail";

(3) The petition includes a copy of the originally deposited paper(s) or fee(s) that constitute the correspondence showing the number of the "Express Mail" mailing label thereon, a copy of any returned postcard receipt, a copy of the "express Mail" mailing label showing the "date-in," a copy of any other official notation by the USPS relied upon to show the date of deposit, and, if the requested filing date is a date other than the "date-in" on the "Express Mail" mailing label or other official notation entered by the USPS, a showing pursuant to paragraph (d)(3) of this section that the requested filing date was the date the correspondence was deposited in the "Express Mail Post Office to Addressee" service prior to the last scheduled pickup for that day; and

(4) The petition includes a statement which establishes, to the satisfaction of the Commissioner, the original deposit of the correspondence and that the copies of the correspondence, the copy of the "Express Mail" mailing label, the copy of any returned postcard receipt, and any official notation entered by the USPS are true copies of the originally mailed correspondence, original "Express Mail" mailing label, returned postcard receipt, and official notation entered by the USPS.

Applicant previously satisfied items 1 and 2 above.

As to item (3), applicant deposited the Express Mail mailing in question in a USPS drop box and never received a copy of the mailing label from the Postal Service. As such, it is impossible for applicant to provide a copy of the Express Mail mailing label. However, as shown above, in order to satisfy this item as to the requested filing date, applicant may make a showing pursuant to 37 CFR 1.10(d)(3) and that any showing pursuant to this paragraph must be corroborated by evidence from the USPS or that came into being after deposit and within one business day of the correspondence in the "Express Mail Post Office to Addressee" service of the USPS. Applicant has provided such a statement. Specifically, applicant has provided a copy of the firm's "US Express Mail Log." On page 6 of the log the mailing in question is clearly listed along with the Express Mail number: ER275611307US. For the purposes of 37 CFR 1.10(d)(3), the deposit time confirmation box was initialed by counsel, the individual who deposited the mailing, the following morning at 11:00 am. Applicant has therefore satisfied this item.

With regard to item (4), applicant has included an affidavit from Ms. VandenHoff detailing her preparation of the Express Mail package in question and her depositing of said package in the USPS Express Mail drop box on Friday, September 19, 2003 at 1:45 pm; prior to the last scheduled pick-up of the day at 3:45 pm. The affidavit confirms that the package contained the proper amount of postage. It is clear from an examination of the firm's US Express Mail log and the affidavit that Ms. VandenHoff is familiar with the USPS Express Mail system and that the papers filed on 14 March 2005 were true and complete copies of the papers originally filed on 19 September 2003.

As such, it is proper to grant applicant's petition at this time. The papers filed 14 March 2005 are accepted as true and complete copies of the papers originally mailed 19 September 2003. As explained in counsel's affidavit, the original papers did not contain an

executed oath or declaration of the inventors. An executed declaration was filed on 14 March 2005. An examination of the declaration finds it to be in compliance with 37 CFR 1.497(a)-(b). Therefore, all of the requirements of 35 U.S.C. 371 for entry into the national stage in the United States were satisfied on 14 March 2005.

## CONCLUSION

Applicant's renewed petition under 37 CFR 1.10(e) is **GRANTED**.

This application will be given an international application filing date of 13 March 2002 and a date of **14 March 2005** under 35 U.S.C. 371(c)(1), (c)(2) and (c)(4).

This application is being returned to the DO/EO/US for processing in accordance with this decision.

Derek A. Putonen
Attorney Advisor
Office of PCT Legal Administration
Tel: (571) 272-3294
Fax: (571) 273-0459

UNITED STATES PATENT AND TRADEMARK OFFICE

Commissioner for Patents
United States Patent and Trademark Office
P.O. Box 1450
Alexandria, VA 22313-1450
www.uspto.gov

**NEXSEN PRUET ADAMS KLEEMEIER, LLC**
**PO DRAWER 2426**
**COLUMBIA SC 29202-2426**

COPY MAILED

JUN 14 2007

OFFICE OF PETITIONS

ON PETITION

In re Application of :
Jean-Marc Wiederrecht et al. :
Application No. 10/528,995 :
Filed: March 14, 2005 :
Attorney Docket No. GLN-031US :

This is a decision on the petition under 37 CFR 1.137(b), filed December 9, 2006, to revive the above-identified application.

The petition is **GRANTED**.

The application became abandoned for failure to reply in a timely manner to the non-final Office action mailed October 4, 2005, which set a shortened statutory period for reply of three (3) months. No extensions of time under the provisions of 37 CFR 1.136(a) was obtained. Accordingly, the application became abandoned on January 5, 2006. The Notice of Abandonment was mailed June 28, 2006.

The petition satisfies the requirements of 37 CFR 1.137(b) in that petitioner has supplied (1) the reply in the form of an amendment; (2) the petition fee of $1500; and (3) an adequate statement of unintentional delay.

The applicant has revoked the petitioner below as attorney of record on April 17, 2007.

Telephone inquiries concerning this decision should be directed to Terri Williams at (571) 272-2991.

The application file is being referred to Technology Center AU 2841 for appropriate action on the concurrently filed amendment.

Liana Walsh
Petitions Examiner
Office of Petitions

cc: **Hugh R. Kress**
**Browning Bushman P.C.**
**5718 Westheimer, Suite 1800**
**Houston, TX 77057**

2 5 MAY 2007

UNITED STATES PATENT AND TRADEMARK OFFICE

Commissioner for Patents
United States Patent and Trademark Office
P.O. Box 1450
Alexandria, VA 22313-1450
www.uspto.gov

BIRCH STEWART KOLASCH & BIRCH
PO BOX 747
FALLS CHURCH VA 22040-0747

| | | |
|---|---|---|
| In re Application of | : | |
| SATO, Noriyuki et al. | : | |
| Application No.: 10/529,000 | : | DECISION ON |
| PCT No.: PCT/JP03/12037 | : | |
| Int. Filing Date: 19 September 2003 | : | PETITION |
| Priority Date: 27 September 2002 | : | |
| Docket No.: 0020-5360PUS1 | : | UNDER 37 CFR 1.181 |
| For: TUMOR ANTIGEN PROTEIN AND | : | |
| UTILIZATION THEREOF | : | |

This decision is in response to applicant's "Response to Notification of Defective Response," filed in the above-captioned application on 06 February 2007. It has been treated as petition under 37 CFR 1.181.

## BACKGROUND

On 19 September 2003, applicants filed international application no. PCT/JP03/12037, claiming a priority date of 27 September 2002. A copy of the international application was transmitted to the Office on 08 April 2004. The thirty month deadline for payment of the basic national fee in the United States was midnight, 27 March 2005.

On 24 March 2005, applicants submitted a transmittal letter for entry into that national phase in the United States accompanied by the basic national fee.

On 01 December 2005, the Office mailed Notification to Comply With Requirements For Patent Applications Containing Nucleotide And/Or Amino Acid Sequence Disclosures (Form PCT/DO/EO/922) indicating that a sequence listing in computer readable form was required.

On 01 February 2006, applicants filed a sequence listing, a preliminary amendment and a floppy diskette.

On 22 January 2007, the Office mailed Notification of Defective Response (Form PCT/DO/EO/916) indicating that applicant had not furnished a sequence listing in computer readable format.

On 06 February 2007, applicants filed a petition under 37 CFR 1.181, accompanied by a postcard receipt.

## DISCUSSION

A petition under 37 CFR 1.181 requires proof that an item was earlier filed with the Office, a copy of the item applicant claims was earlier filed with the Office and a statement from applicant that the item is a copy of the earlier filed item.

In this instance, applicant has filed a copy of a postcard receipt indicating that a CRF disk for this application was filed with the Office on 01 February 2006 and applicant states that a paper copy and a CRF of the sequence listing were submitted on that day. The postcard is stamped by the Office with "01 February 2006". However, applicant has not furnished a copy of the 01 February 2006 submission and the Office does not have the CRF. A copy of the CRF that applicants claim was submitted on 01 February 2006 and a statement that the CRF is identical to the paper version are required.

## CONCLUSION

For the reasons discussed above, applicants' petition under 37 CFR 1.181 is **DISMISSED** without prejudice.

The Notification of Defective Response (Form PCT/DO/EO/916) mailed 22 January 2007 is **VACATED**.

A copy of the CRF that applicant claims was submitted on 01 February 2006 and the statement that the CRF is identical to the paper copy is required within **TWO (2) MONTHS** of the mail date of this decision. Failure to timely file the proper response will result in abandonment of this application. Extensions of time are available under 37 CFR 1.136(a).

Any further correspondence with respect to this matter should be addressed to the Mail Stop PCT, Commissioner for Patents, Office of PCT Legal Administration, P.O. Box 1450, Alexandria, Virginia 22313-1450, with the contents of the letter marked to the attention of the Office of PCT Legal Administration.

Erin P. Thomson

Erin P. Thomson
Attorney Advisor
PCT Legal Administration

Telephone: 571-272-3292
Facsimile: 571-273-0459

UNITED STATES PATENT AND TRADEMARK OFFICE

Commissioner for Patents
United States Patent and Trademark Office
P.O. Box 1450
Alexandria, VA 22313-1450
www.uspto.gov

CANTOR COLBURN, LLP
20 Church Street
22nd Floor
Hartford, CT 06103

MAILED

OCT 02 2009

OFFICE OF PETITIONS

| | | |
|---|---|---|
| In re Patent No. 7,337,987 | : | |
| Issue Date: March 4, 2008 | : | |
| Application No. 10/529,004 | : | ON PETITION |
| Filed: March 24, 2005 | : | |
| Attorney Docket No. KOY-0047 | : | |

This is a decision on the petition filed March 13, 2009, which is being treated as a request under 37 CFR 3.81(b)[1] to correct the name of the assignee and address on the front page of the above-identified patent by way of a Certificate of Correction.

The request is **GRANTED**.

Telephone inquiries concerning this decision may be directed to the undersigned at (571) 272-0602. Inquiries regarding the issuance of a certificate of correction should be directed to the Certificate of Correction Branch at (571) 272-4200.

The Certificates of Correction Branch will be notified of this decision granting the petition under 37 CFR 3.81(b) and directing issuance of the requested Certificate of Correction.

Thurman K. Page
Petitions Examiner
Office of Petitions

[1] *See* MPEP 1309, subsection II; and Official Gazette of June 22, 2004.

RECEIVED
CENTRAL FAX CENTER
MAR 1 3 2009

10/529006

CANTOR COLBURN LLP
INTELLECTUAL PROPERTY ATTORNEYS
20 Church Street, 22nd Floor
Hartford, CT 06103
tel: (860) 286-2929
fax: (860) 286-0115

# FACSIMILE TRANSMITTAL SHEET

DATE: March 13, 2009
TO: PETITION OFFICE
COMPANY: U.S. PATENT AND TRADEMARK OFFICE
FAX NO.: (571) 273-8300 TEL. NO.:

FROM: Diane Briggs (Cantor Colburn LLP)
OUR REF: KOY-0046 YOUR REF: USSN 10/529,006

TOTAL NUMBER OF PAGES SENT (INCLUDING THIS COVER SHEET): 6

COMMENTS: TO WHOM IT MAY CONCERN:

Please find enclosed the Petition Pursuant to 37 C.F.R. 3.81(b); Request for Certificate of Correction of Patent for Applicants' Mistake (37 C.F.R. 1.323); and a Certificate of Correction (Form PTO-1050) for U.S. Serial No. 10/529,006.

Please charge the above to Deposit Account 06-1130 ($230).

Thank you,
CANTOR COLBURN LLP

If there are any problems with this transmission,
please call (860) 286-2929 and ask for D. Briggs

IMPORTANT: This message is intended only for the use of the individual or entity to which it is addressed, and may contain information that is privileged, confidential and exempt from disclosure under applicable law. If the reader of this message is not the intended recipient, or the employee or agent responsible for delivering it to the intended recipient, you are hereby notified that reading, disseminating, distributing or copying this communication is strictly prohibited. If you have received this communication in error, please immediately notify us by telephone, and return the original message to us at the above address via the U.S. Postal Service. Thank you.

RECEIVED
CENTRAL FAX CENTER
MAR 1 3 2009

Ref: KOY0046US

IN THE UNITED STATES PATENT AND TRADEMARK OFFICE

Patent Number: US 7,314,185 B2

Issued: January 1, 2008

Name of Patentee: Nishi, et al.

Title of Invention: LIQUID JETTING APPARATUS

**PETITION PURSUANT TO 37 C.F.R. 3.81(b)**

Mail Stop Petitions
Commissioner for Patents
P.O. Box 1450
Alexandria, VA 22313-1450

Sir:

Pursuant to 37 C.F.R. 3.81(b), Assignees herein petition to correct the name and address of one of the assignees. The Assignment was submitted for recordation as set forth in 37 CFR 3.11 before issuance of the patent and was recorded on March 24, 2005, at Reel 017185, Frame 0182. Please charge Deposit Account No. 06-1130 the $130.00 petition fee set forth in 37 C.F.R. 1.17(i).

The correct names and addresses of the assignees are: Konica Minolta Holdings, Inc., Japan; Sharp Kabushiki Kaisha, Japan; and National Institute of Advanced Industrial Science and Technology, Japan. A Request for a Certificate of Correction of Patent for Applicant's Mistake together with Form PTO 1050 is filed herewith.

03/16/2009 VBUI11 00000011 061130 10529086
01 FC:1464 130.00 DA

It is respectfully requested if the Petition is granted to please forward the file to the Certificates of Correction Branch for issuance of a Certificate of Correction.

If there are any additional charges with respect to this Petition, please charge them to Deposit Account No. 06-1130 maintained by Assignees' attorneys.

Respectfully submitted,

CANTOR COLBURN LLP

By: /Daniel P. Lent/
Daniel P. Lent
Registration No. 44,867
20 Church Street
22nd Floor
Hartford, Connecticut 06103
Telephone: (860) 286-2929
Customer No. 23413

Date: March 13, 2009

RECEIVED
CENTRAL FAX CENTER
MAR. 1 3 2009

Ref: KOY0046US

IN THE UNITED STATES PATENT AND TRADEMARK OFFICE

Patent Number: US 7,314,185 B2

Issued: January 1, 2008

Name of Patentee: Nishi, et al.

Title of Invention: LIQUID JETTING APPARATUS

**REQUEST FOR CERTIFICATE OF CORRECTION OF PATENT FOR APPLICANTS' MISTAKE (37 C.F.R. 1.323)**

Commissioner for Patents
P.O. Box 1450
Alexandria, VA 22313-1450

ATTENTION: Decision and Certificate of Correction
Branch of the Patent Issue Division

Sirs:

It is noted that an error appears in this patent of a typographical nature or character, as more fully described below. It occurred in good faith. Correction thereof does not involve such changes in the patent as would constitute new matter or would require re-examination. A certificate of correction is requested.

Attached hereto is Form PTO-1050.

The error appears in the Title Page: Item (54), Title of Invention; and Item (73), Assignee information.

03/16/2009 VBUI11 00000011 061130 10529006
02 FC:1011 100.00 DA

RECEIVED
CENTRAL FAX CENTER
MAR. 1 3 2009

Please send the Certificate of Correction to:

Cantor Colburn LLP
20 Church Street
22nd Floor
Hartford, Connecticut 06103

Please charge the amount of $100.00, as required by 37 C.F.R. 1.20(a) or any additional charges with respect to this request or otherwise, to Deposit Account No. 06-1130 maintained by Patentees' attorneys.

Respectfully submitted,

CANTOR COLBURN LLP

By:/Daniel P. Lent/

Daniel P. Lent
Registration No. 44,867
20 Church Street
22nd Floor
Hartford, Connecticut 06103
Telephone: (860) 286-2929
Customer No. 23413

Date: March 13, 2009



PAGE 5/6 * RCVD AT 3/13/2009 3:01:03 PM [Eastern Daylight Time] * SVR:USPTO-EFXRF-5/36 * DNIS:2738300 * CSID:860 286 0115 * DURATION (mm-ss):01-36

RECEIVED
CENTRAL FAX CENTER
MAR 1 3 2009

PTO/SB/44 (04-06)
Approved for use through 04/30/2007. OMB 0651-0033
U.S. Patent and Trademark Office; U.S. DEPARTMENT OF COMMERCE
Under the Paperwork Reduction Act of 1995, no persons are required to respond to a collection of information unless it displays a valid OMB control number.
(Also Form PTO-1050)

# UNITED STATES PATENT AND TRADEMARK OFFICE
## CERTIFICATE OF CORRECTION



| | |
|---|---|
| PATENT NO. | :US 7,314,185 B2 |
| APPLICATION NO. | :10/529,006 |
| ISSUE DATE | :January 1, 2008 |
| INVENTOR(S) | :Yasuo Nishi, et al. |

It is certified that errors appear in the above-identified patent and that said Letters Patent is hereby corrected as shown below:

Item (54), Title of Invention, delete "LIQUID JETTING DEVICE" and insert therefor --LIQUID JETTING APPARATUS--.

Item (73), Assignee, delete "Konica Minolta Holdings, Inc. (JP); Sharp Kabushiki Kaishi (JP); National Institute of Advanced Industrial Science and Technology (JP)" and insert therefor --Konica Minolta Holdings, Inc. (JP); Sharp Kabushiki Kaisha (JP); National Institute of Advanced Industrial Science and Technology (JP)--.

MAILING ADDRESS OF SENDER (Please do not use customer number below):
Cantor Colburn LLP
20 Church Street
22nd Floor
Hartford, CT 06103

This collection of information is required by 37 CFR 1.322, 1.323, and 1.324. The information is required to obtain or retain a benefit by the public which is to file (and by the USPTO to process) an application. Confidentiality is governed by 35 U.S.C. 122 and 37 CFR 1.14. This collection is estimated to take 1.0 hour to complete, including gathering, preparing, and submitting the completed application form to the USPTO. Time will vary depending upon the individual case. Any comments on the amount of time you require to complete this form and/or suggestions for reducing this burden, should be sent to the Chief Information Officer, U.S. Patent and Trademark Office, U.S. Department of Commerce, P.O. Box 1450, Alexandria, VA 22313-1450. DO NOT SEND FEES OR COMPLETED FORMS TO THIS ADDRESS. SEND TO: Attention Certificate of Corrections Branch, Commissioner for Patents, P.O. Box 1450, Alexandria, VA 22313-1450.

*If you need assistance in completing this form, call 1-800-PTO-9199 and select option 2.*

UNITED STATES PATENT AND TRADEMARK OFFICE

UNITED STATES DEPARTMENT OF COMMERCE
United States Patent and Trademark Office
Address: COMMISSIONER FOR PATENTS
P.O. Box 1450
Alexandria, Virginia 22313-1450
www.uspto.gov

FOLEY AND LARDNER LLP
SUITE 500
3000 K STREET NW
WASHINGTON, DC 20007

Mail Date: 04/21/2010

| | | |
|---|---|---|
| **Applicant** | : Kenji Soejima | : DECISION ON REQUEST FOR |
| **Patent Number** | : 7575872 | : RECALCULATION of PATENT |
| **Issue Date** | : 08/18/2009 | : TERM ADJUSTMENT IN VIEW |
| **Appliction No** | : 10/529,009 | : OF WYETH AND NOTICE OF INTENT TO |
| **Filed** | : 03/24/2005 | : ISSUE CERTIFICATE OF CORRECTION |
| | | : |

The Request for Recalculation is **GRANTED** to the extent indicated.

The patent term adjustment has been determined to be **583** days. The USPTO will *sua sponte* issue a certificate of correction reflecting the amount of PTA days determined by the recalculation.

Prior to the issuance of the certificate of correction, the USPTO will afford patentee an opportunity to be heard and request reconsideration. Accordingly, patentee has **one month or thirty (30) days**, whichever is longer, to file a request for reconsideration of this patent term adjustment calculation. See 35 U.S.C. 154(b)(3)(B)(ii) and 37 CFR 1.322(a)(4). No extensions of time will be granted under 37 CFR 1.136.

Patentee should use document code PET.OP if electronically filing a request for reconsideration of this patent term adjustment calculation. The patentee must also include the information required by 37 CFR 1.705(b)(2) and the fee required by 37 CFR 1.18(e). If patentee does not file a timely request for reconsideration of this patent term adjustment calculation including the information required by 37 CFR 1.705(b)(2) and the fee required by 37 CFR 1.18(e), the USPTO will issue a certificate of correction reflecting the PTA determination noted above.

Patentee should be aware that in order to preserve the right to review in the United States District Court for the District of Columbia of the USPTO patent term adjustment determination, patentee must ensure that he or she also take the steps required under 35 U.S.C. 154(b)(4)(A) in a timely manner. Nothing in the request for recalculation should be construed as providing an alternative time frame for commencing a civil action under 35 U.S.C. 154(b)(4)(A).

Any questions concerning this decision should be directed to the Office of Patent Legal Administration at 571-272-7702.

18 APR 2005

#3

UNITED STATES PATENT AND TRADEMARK OFFICE

COMMISSIONER FOR PATENTS
UNITED STATES PATENT AND TRADEMARK OFFICE
P.O. BOX 1450
ALEXANDRIA, VA 22313-1450
www.uspto.gov

Vaughn W. North
Thorpe North & Western, LLP
P.O. Box 1219
Sandy, Utah 84091-1219

| | | |
|---|---|---|
| In re Application of | : | |
| NORRIS et al. | : | |
| U.S. App. No. 10/529,013 | : | DECISION ON PETITION |
| PCT No.: PCT/US03/08311 | : | UNDER 37 CFR 1.10 |
| Int. Filing Date: 18 March 2003 | : | |
| Priority Date: 18 March 2002 | : | |
| Attorney Docket No.: T5276.CIP2.PCT.US | : | |
| For: PARAMETRIC RING EMITTER | | |

This decision is in response to applicants' "Petition under 37 CFR 1.10(e)" filed 20 December 2004 to reconstruct the application and accord a filing date of 17 September 2004 to the above-identified national stage application. No petition fee is required.

## BACKGROUND

On 18 March 2003, applicants filed international application PCT/US03/08311 which claimed a priority date of 18 March 2002. Pursuant to 37 CFR 1.495, the deadline for payment of the basic national fee in the United States was to expire 30 months from the priority date, 18 September 2004.

On 17 September 2004, applicants filed a Transmittal Letter (PTO-1390) requesting entry into the national stage in the United States of America under 35 U.S.C. 371. Filed with the Transmittal Letter were, *among others*, the requisite basic national fee; a copy of the international application; and an executed declaration. These papers were placed in application no. 10/101,426 since this number was used on applicants' Transmittal Letter (PTO-1390).

On 20 December 2004, applicants filed the present petition forwarding copies of papers filed in the above-identified application on 17 September 2004. These papers consisted of: a copy of a Transmittal Letter to the United States Designated Office concerning a filing under 35 U.S.C. 371; a copy of the Customer Receipt of the "Express Mail" mailing label #EV389082514US; Declaration (of inventors) and Petition; Notification of transmittal of the International Preliminary Examination Report; Notification of Receipt of Demand; copy of a check in the amount of $570; and a postcard receipt dated 17 September 2004. The submission was assigned 10/529,013.

## DISCUSSION

A review of the application file reveals that the Transmittal Letter to the United States Designated Office concerning a filing under 35 U.S.C. 371; Declaration (of inventors) and Petition; Notification of transmittal of the International Preliminary Examination Report; and Notification of Receipt of Demand; which were all date stamped of 17 September 2004, have been removed from application no. no.10/101,426 and placed in application no. 10/529,013. Therefore, applicant's petition is dismissed as moot since the papers filed 17 September 2004 have been placed in the appropriate application folder. Accordingly, it is appropriate to accord the application a filing date of **17 September 2004**.

## CONCLUSION

Applicants' petition under 37 CFR 1.10(e) requesting that the application papers filed on 20 December 2004 be accorded a filing date of 17 September 2004 is **DISMISSED** as moot.

Applicants should use application number **10/529,013** in all future communications with the Patent and Trademark Office in regards to the U.S. national stage of international application PCT/US03/08311.

This application is being returned to the United States/Elected Office for processing in accordance with this decision.

Anthony Smith

Anthony Smith
Attorney-Advisor
Office of PCT Legal Administration
Telephone: (571) 272-3298
Facsimile: (571) 273-0459

UNITED STATES PATENT AND TRADEMARK OFFICE

UNITED STATES DEPARTMENT OF COMMERCE
United States Patent and Trademark Office
Address: COMMISSIONER FOR PATENTS
P.O. Box 1450
Alexandria, Virginia 22313-1450
www.uspto.gov

BIRCH STEWART KOLASCH & BIRCH
PO BOX 747
FALLS CHURCH, VA 22040-0747

Mail Date: 04/20/2010

| | | |
|---|---|---|
| **Applicant** | : Tetsuyuki Nakayashiki | : DECISION ON REQUEST FOR |
| **Patent Number** | : 7611817 | : RECALCULATION of PATENT |
| **Issue Date** | : 11/03/2009 | : TERM ADJUSTMENT IN VIEW |
| **Appliction No** | : 10/529,015 | : OF WYETH AND NOTICE OF INTENT TO |
| **Filed** | : 05/13/2005 | : ISSUE CERTIFICATE OF CORRECTION |
| | | : |

The Request for Recalculation is **GRANTED** to the extent indicated.

The patent term adjustment has been determined to be **1209** days. The USPTO will *sua sponte* issue a certificate of correction reflecting the amount of PTA days determined by the recalculation.

Prior to the issuance of the certificate of correction, the USPTO will afford patentee an opportunity to be heard and request reconsideration. Accordingly, patentee has **one month or thirty (30) days**, whichever is longer, to file a request for reconsideration of this patent term adjustment calculation. See 35 U.S.C. 154(b)(3)(B)(ii) and 37 CFR 1.322(a)(4). No extensions of time will be granted under 37 CFR 1.136.

Patentee should use document code PET.OP if electronically filing a request for reconsideration of this patent term adjustment calculation. The patentee must also include the information required by 37 CFR 1.705(b)(2) and the fee required by 37 CFR 1.18(e). If patentee does not file a timely request for reconsideration of this patent term adjustment calculation including the information required by 37 CFR 1.705(b)(2) and the fee required by 37 CFR 1.18(e), the USPTO will issue a certificate of correction reflecting the PTA determination noted above.

Patentee should be aware that in order to preserve the right to review in the United States District Court for the District of Columbia of the USPTO patent term adjustment determination, patentee must ensure that he or she also take the steps required under 35 U.S.C. 154(b)(4)(A) in a timely manner. Nothing in the request for recalculation should be construed as providing an alternative time frame for commencing a civil action under 35 U.S.C. 154(b)(4)(A).

Any questions concerning this decision should be directed to the Office of Patent Legal Administration at 571-272-7702.

12 MAY 2006

UNITED STATES PATENT AND TRADEMARK OFFICE

Commissioner for Patents
United States Patent and Trademark Office
P.O. Box 1450
Alexandria, VA 22313-1450
www.uspto.gov

MAINE & ASMUS
P. O. BOX 3445
NASHUA NH 03061

| | | |
|---|---|---|
| In re Application of | : | |
| BROMMER | : | |
| Application No.: 10/529,019 | : | |
| PCT No.: PCT/US03/17377 | : | DECISION |
| Int. Filing Date: 02 June 2003 | : | |
| Priority Date: 19 November 2002 | : | |
| Attorney's Docket No.: 20020029-US | : | |
| For: BANDWIDTH EFFICIENT WIRELESS | : | |
| NETWORK MODEM | : | |

This decision is in response to applicants' "REQUEST FOR CORRECTIONS TO FILING RECEIPT" filed via facsimile transmission 12 December 2005.

## BACKGROUND

On 02 June 2003, applicants filed international application PCT/US03/17377, which designated the United States and claimed a priority date of 19 November 2002. A copy of the international application was communicated to the USPTO from the International Bureau on 03 June 2004. The thirty-month period for paying the basic national fee in the United States expired at midnight on 19 May 2005.

On 24 March 2005, applicants filed a submission for entry into the national stage in the United States which was accompanied by, *inter alia*, the U.S. Basic National Fee and an Application Data Sheet (ADS).

On 12 December 2005, applicants filed a "REQUEST FOR CORRECTIONS TO FILING RECEIPT".

## DISCUSSION

Priority Data

The claim to priority under 35 U.S.C. § 120 to U.S. Application No. 10/125,241 complies with 37 CFR 1.78(a)(2)(i)-(iii). Accordingly, the corrected filing receipt will indicate that the instant application is a 371 of PCT/US03/17377 filed 6/2/2003, which claims benefit of 60/427,495 filed 11/19/2002, and is a CIP of 10/125,241 filed 4/18/2002, which claims benefit of 60/284,629 filed 4/18/2001.

Inventor Information

The city of residence for the applicant should be "Exeter".

**CONCLUSION**

For the reasons set forth above, applicants' request for a corrected filing receipt is **GRANTED**.

Please direct further correspondence with respect to this matter to Mail Stop PCT, Commissioner for Patents, Office of PCT Legal Administration, P.O. Box 1450, Alexandria, Virginia 22313-1450, with the contents of the letter marked to the attention of the Office of PCT Legal Administration.

Daniel Stemmer
Legal Examiner
PCT Legal Affairs
Office of Patent Cooperation Treaty
Legal Administration
Telephone: (571) 272-3301
Facsimile: (571) 273-0459

# IN THE UNITED STATES PATENT AND TRADEMARK OFFICE

In re Application of: BROMMER, Karl D. Group Art Unit:

Serial No. Examiner:

Filed: Herein Atty. Dkt. No: 20020029-US

For: BANDWIDTH-EFFICIENT WIRELESS NETWORK MODEM

To: Commissioner for Patents
Attn: PCT Legal
PO Box 1450
Alexandria, VA 22313-1450

Fr: 42716

CERTIFICATE OF FACSIMILE 37 CFR 1.8: I hereby certify that this paper is being transmitted by facsimile to the Commissioner for Patents and Trademarks to the attention of PCT Legal at facsimile # 571-273-0459 and telephone # 571-272-3299 on the date shown below.

Date: December 12, 2005 [✓]Debra A. Stengel [ ]~~Scott J. Asmus, Reg. #42,269~~

Debra A. Stengel

Commissioner:

REQUEST FOR CORRECTIONS TO FILING RECEIPT

We are in receipt of a filing receipt, dated 12/05/2005, for the above referenced patent application. There is an error in the resident city for the inventor and there are errors in the Domestic Priority data.

The inventor residence city changed since the filing of PCT application number PCT/US03/17377 and was noted correctly on the Application Data Sheet and Declaration and Power of Attorney originally filed with this Request for Entry into US National Phase.

The priority data was correct in the original PCT specification and on the Declaration and Power of Attorney originally filed with this Request for Entry into US National Phase.

RECEIVED

12 DEC 2005

Legal Staff
International Division

Enclosed herewith is 1 page copy of the original filing receipt with the corrections made, 3 pages copy of original Application Date Sheet showing correct information and corrections made, 1 page copy of original executed Declaration and Power of Attorney, and 3 pages Supplemental Application Data Sheet.

DEPOSIT ACCOUNT **190130** AUTHORIZATION – The Office is hereby authorized to charge the required fee, and any deficiency or credit any overpayment in the fees to the above deposit account, owned by BAE SYSTEMS Information and Electronic Systems Integration Inc. an authorized signator for which is Kevin M. Perkins, V.P. & Company Counsel, and for whom the undersigned are authorized agents.

Respectfully submitted,

Scott J. Asmus, Reg. No. 42,269
Andrew P. Cernota, Reg. No. 52,711
Attorneys/Agents for Applicant

Cust. No. 42716
Maine & Asmus
PO Box 3445
Nashua, NH 03061-3445
Tel. No. (603) 886-6100, Fax. No. (603) 886-4796
Info@maineandasmus.com

UNITED STATES PATENT AND TRADEMARK OFFICE

UNITED STATES DEPARTMENT OF COMMERCE
United States Patent and Trademark Office
Address: COMMISSIONER FOR PATENTS
P.O. Box 1450
Alexandria, Virginia 22313-1450
www.uspto.gov

| APPL NO. | FILING OR 371 (c) DATE | ART UNIT | FIL FEE REC'D | ATTY.DOCKET NO | DRAWINGS | TOT CLMS | IND CLMS |
|---|---|---|---|---|---|---|---|
| 10/529,019 | 03/24/2005 | 3634 | 1000 | 20020029-US | 19 | 24 | 4 |

**CONFIRMATION NO. 8890**

42716
MAINE & ASMUS
P. O. BOX 3445
NASHUA, NH 03061

**FILING RECEIPT**

*OC000000017570235*

Date Mailed: 12/05/2005

Receipt is acknowledged of this regular Patent Application. It will be considered in its order and you will be notified as to the results of the examination. Be sure to provide the U.S. APPLICATION NUMBER, FILING DATE, NAME OF APPLICANT, and TITLE OF INVENTION when inquiring about this application. Fees transmitted by check or draft are subject to collection. Please verify the accuracy of the data presented on this receipt. **If an error is noted on this Filing Receipt, please mail to the Commissioner for Patents P.O. Box 1450 Alexandria Va 22313-1450. Please provide a copy of this Filing Receipt with the changes noted thereon. If you received a "Notice to File Missing Parts" for this application, please submit any corrections to this Filing Receipt with your reply to the Notice. When the USPTO processes the reply to the Notice, the USPTO will generate another Filing Receipt incorporating the requested corrections (if appropriate).**

**Applicant(s)**

Karl D Brommer, ~~Hampton Falls~~ Exeter, NH;

**Power of Attorney:** The patent practitioners associated with Customer Number **42716**.

**Domestic Priority data as claimed by applicant**

This application is a 371 of PCT/US03/17377 06/02/2003
which claims benefit of 60/427,495 11/19/2002
Application PCT/US03/17377 is also a CIP of 10/125,241 which claims benefit of 60/284,629 04/18/2001

**Foreign Applications**

**Projected Publication Date:** 03/09/2006

**Non-Publication Request:** No

**Early Publication Request:** No

**Title**

Bandwidth-efficient wireless network modem

**Preliminary Class**

CLIENT: BAE
JOB#: 20020029-US
RCVD: 12/08/05
RSPBY:
RCVDBY:
FSUM:
CAL:
DKT:
NOTICE:
T/S

# APPLICATION DATA SHEET

lectronic Version v14
tylesheet Version v14.1

*Applicant Information:*

Inventor 1:

| | |
|---|---|
| Applicant Authority Type: | Inventor |
| Citizenship: | US |
| Given Name: | Karl |
| Middle Name: | D |
| Family Name: | Brommer |
| City of Residence: | Exeter |
| State of Residence: | NH |
| Country of Residence: | US |
| Address-1 of Mailing Address: | 165 High Street |
| Address-2 of Mailing Address: | |
| City of Mailing Address: | Exeter |
| State of Mailing Address: | NH |
| Postal Code of Mailing Address: | 03833 |
| Country of Mailing Address: | US |
| Phone: | |
| Fax: | |
| E-mail: | |

*Correspondence Information:*

Customer Number: 42716 *42716*

*Application Information:*

Title of Invention: BANDWIDTH-EFFICIENT WIRELESS NETWORK MODEM
Application Type: regular, utility
Attorney Docket Number: 20020029-US

Botanic Information:

Publication Information:
Suggested Figure for Publication - 1

Suggested Classification -
Suggested Technology Center -
Total Number of Drawing Sheets - 19

*Representative Information:*

practitioner(s) at Customer Number:

42716 *42716*

as my attorney(s) or agent(s) to prosecute the application identified above, and to transact all business in the United States Patent and Trademark Office connected therewith.

*Domestic Priority Information:*

This is a National Stage of WO application number PCT/US2003/017377, filed 2003-06-02, now Pending.

WO application number PCT/US2003/017377, filed 2003-06-02 is a Non-Provisional of US application number 60/427,495, filed 2002-11-19, now Expired.

WO application number PCT/US2003/017377, filed 2003-06-02 is a ~~This is a~~ Continuation-in-part of US application number 10/125,241, filed 2002-04-18, now Pending. *

US application number 10/125,241, filed 2002-04-18 is a Non-Provisional of US application number 60/284,629, filed 2001-04-18, now Expired.

*Foreign Priority Information:*

*Assignee Information:*

Assignee 1:

| | |
|---|---|
| Organization Name: | BAE SYSTEMS INFORMATION AND ELECTRONIC SYSTEMS INTEGRATION INC. |
| Address-1 of Mailing Address: | 65 Spit Brook Road |
| Address-2 of Mailing Address: | |
| City of Mailing Address: | Nashua |
| State of Mailing Address: | NH |
| Postal Code of Mailing Address: | 03061 |

Country of Mailing Address: US

Phone:

Fax:

E-mail:

Atty. Docket: 200020029

## DECLARATION AND POWER OF ATTORNEY FOR PATENT APPLICATION

As a below-named inventor, I hereby declare that:

- My residence, post-office addresses and citizenship are as stated below next to my name.
- I believe that I am the original, first and sole inventor (if only one name is listed below) or an original, first and joint inventor (if plural names are listed below) of the subject matter which is claimed and for which a patent is sought by the application for U.S. Letters Patent entitled: **BANDWIDTH-EFFICIENT WIRELESS NETWORK MODEM**, the specification of which is attached hereto and identified by Docket No. **200020029 of BAE SYSTEMS Information and Electronic Systems Integration Inc.**
- I hereby state that I have reviewed and understand the contents of the above-identified application specification, including the claims.
- I acknowledge the duty to disclose information that is material to the examination of this application in accordance with Title 37, Code of Federal Regulations, paragraph 1.56(a).
- I hereby claim foreign priority benefits under Title 35, United States Code 119 of any foreign application(s) for patent or inventor's certificate listed below and have also identified below any foreign application for patent or inventor's certificate having a filing date before that of the application on which priority is claimed:
- I hereby claim the benefit under 35 U.S.C. 119(e) of any United States provisional application(s) listed below: 60/427,495 filed 11/19/2002 and 60/284,629 filed 04/18/2001
- I hereby claim the benefit under 35 U.S.C. 120 of any United States application(s), or 365(c) of any PCT international application designating the United States of America, listed below and, insofar as the subject matter of each of the claims of this application is not disclosed in the prior United States or PCT International application in the manner provided by the first paragraph of 35 U.S.C. 112, I acknowledge the duty to disclose information which is material to patentability as defined in 37 CFR 1.56 which became available between the filing date of the prior application and the national or PCT international filing date of this application: PCT/US2003/017377 filed 06/02/2003 and 10/125,241 filed 04/18/2002
- I hereby declare that all statements made herein of my knowledge are true and that all statements made on information and belief are believed to be true; and further that these statements were made with the knowledge that willful false statements and the like so made are punishable by fine or imprisonment or both under Section 1001 of Title 18 of the United States Code and that such willful false statements may jeopardize the validity of the application or any patent issued thereon.
- **Power of Attorney:** We hereby appoint the following persons as our attorney, with full power of substitution, delegation and revocation, to prosecute this application, to make alterations and amendments therein, to receive the patent and to transact all business in the Patent and Trademark Office connected therewith: **Customer Number 42716 - Scott J. Asmus, Reg. No. 42,269; Daniel J. Long, Reg. No. 29,404; and Andrew P. Cernota, Reg. No. 52,711.**
- Please direct all telephone calls to **Scott J. Asmus or Andrew P. Cernota at (603) 886-6100.**
- Please address all correspondence to **Maine and Asmus, PO Box 3445, Nashua, NH 03061-3445.**

| | |
|---|---|
| Signature of Inventor: | Karl D Brommer |
| Name: | **Karl D. Brommer** |
| Date: | 3/23/05 |
| Residence: | **165 High Street<br>Exeter, NH 03833** |
| Citizenship: | United States |
| P. O. Address: | Same as Residence |

# APPLICATION DATA SHEET

:lectronic Version v14
;tylesheet Version v14.1

*Applicant Information:*

Inventor 1:

| | |
|---|---|
| Applicant Authority Type: | Inventor |
| Citizenship: | US |
| Given Name: | Karl |
| Middle Name: | D |
| Family Name: | Brommer |
| City of Residence: | Exeter |
| State of Residence: | NH |
| Country of Residence: | US |
| Address-1 of Mailing Address: | 165 High Street |
| Address-2 of Mailing Address: | |
| City of Mailing Address: | Exeter |
| State of Mailing Address: | NH |
| Postal Code of Mailing Address: | 03833 |
| Country of Mailing Address: | US |
| Phone: | |
| Fax: | |
| E-mail: | |

*Correspondence Information:*

Customer Number: 42716 *42716*

*Application Information:*

Title of Invention: BANDWIDTH-EFFICIENT WIRELESS NETWORK MODEM
Application Type: regular, utility
Attorney Docket Number: 20020029-US

Botanic Information:

Publication Information:
Suggested Figure for Publication - 1

Suggested Classification -
Suggested Technology Center -
Total Number of Drawing Sheets - 19

*Representative Information:*

practitioner(s) at Customer Number:

42716 *42716*

as my attorney(s) or agent(s) to prosecute the application identified above, and to transact all business in the United States Patent and Trademark Office connected therewith.

*Domestic Priority Information:*

This is a National Stage of WO application number PCT/US2003/017377, filed 2003-06-02, now Pending.

WO application number PCT/US2003/017377, filed 2003-06-02 is a Non-Provisional of US application number 60/427,495, filed 2002-11-19, now Expired.

WO application number PCT/US2003/017377, filed 2003-06-02 is a Continuation-in-part of US application number 10/125,241, filed 2002-04-18, now Pending.

US application number 10/125,241, filed 2002-04-18 is a Non-Provisional of US application number 60/284,629, filed 2001-04-18, now Expired.

*Foreign Priority Information:*

*Assignee Information:*

Assignee 1:

| | |
|---|---|
| Organization Name: | BAE SYSTEMS INFORMATION AND ELECTRONIC SYSTEMS INTEGRATION INC. |
| Address-1 of Mailing Address: | 65 Spit Brook Road |
| Address-2 of Mailing Address: | |
| City of Mailing Address: | Nashua |
| State of Mailing Address: | NH |
| Postal Code of Mailing | 03061 |

Address:
Country of Mailing Address: US
Phone:
Fax:
E-mail:

**********
*** RX REPORT ***
**********

RECEPTION OK

| | |
|---|---|
| TX/RX NO | 9685 |
| RECIPIENT ADDRESS | 603 886 4796 |
| DESTINATION ID | |
| ST. TIME | 12/12 12:40 |
| TIME USE | 02'01 |
| PGS. | 10 |
| RESULT | OK |

RECEIVED
CENTRAL FAX CENTER
DEC 30 2008

ATTY.DKT.28951.5379

IN THE UNITED STATES PATENT AND TRADEMARK OFFICE

In re the Patent of

Akihiko YAMAZAKI et al

Patent No.: 7,421,774

Issue Date: September 9, 2008

Title: WINDING METHOD FOR STATOR OF MOTOR

VIA FACSIMILE
(571) 273-8300
ATTN: Office of Petitions

REQUEST UNDER 37 CFR 3.81(b)
TO CORRECT ASSIGNEE NAME
ON ISSUED PATENT

Office of Petitions
Commissioner for Patents
U.S. Patent & Trademark Office
Alexandria, VA 22313-1450

Pursuant to 37 CFR 3.81(b), and responsive to the 10-06-08 (apparently) letter received October 8, 2008 from the Correction Branch, patentees, by their undersigned attorney, hereby respectfully request correction of the assignee name on U.S. Patent 7,421,774, a copy of the first page of which is attached hereto as Appendix A.

Also attached hereto as Appendix B is a copy of the Request for Certificate of Correction Pursuant to 37 CFR 1.323, filed September 18, 2008.

The PTO is hereby authorized to charge the 37 CFR 1.117(h) fee (currently $130), and any other applicable fees, to patentees' attorneys' deposit account no. 19-4293. We note that the fee for the Request for Certificate of Correction was previously authorized (see Appendix B).

01/02/2009 VBUI11 00000001 194293 10529836
01 FC:1464 130.00 DA

Attorney Docket No. 28951.53'/9

It is hereby stated that the failure to include the correct assignee name on the Form PTO1-85B, filed July 11, 2008, was inadvertent.

Also attached hereto as Appendix C is a copy of the March 27, 2008 Notice of Recordation of Assignment Document showing the relevant 4 pages to be recorded at Reel 020713, Frame 036'.

Patentees/Petitioners hereby again request that the Certificate of Correction (see Appendix B) be issued.

Patentees/Petitioners also hereby request that the official file of this patent be forwarded to the Certificate of Correction Branch for issuance of the Certificate of Correction.

Should anyone in the PTO have any question about this request, they are invited to telephone patentees' attorney at the number listed below.

Respectfully submitted,

Roger W. Parkhurst
Registration No. 25,177

December 30, 2008

STEPTOE & JOHNSON LLP
1330 Connecticut Avenue, NW
Washington, DC 20036-1795
Tel: (202) 429-6420

Attachments: Appendices A-C

CERTIFICATE OF TRANSMISSION
I hereby certify that the attached correspondence is being facsimile transmitted to the U.S. Patent and Trademark Office at Facsimile Number (571) 273-8300 on 12/30, 2008
By: Hortense G. Coleman

RECEIVED
CENTRAL FAX CENTER
DEC 30 2008



US007421774B2

(12) **United States Patent**
**Yamazaki et al.**

(10) **Patent No.: US 7,421,774 B2**
(45) **Date of Patent: Sep. 9, 2008**

(54) **WINDING METHOD FOR STATOR OF MOTOR**

(75) Inventors: **Akihiko Yamazaki**, Fukui (JP); **Kenzi Sasaki**, Fukui (JP); **Yasutake Seki**, Fukui (JP); **Koh Kajita**, Gifu (JP)

(73) Assignee: **Matsushita Electric Industrial Co., Ltd.**, Osaka (JP)

( * ) Notice: Subject to any disclaimer, the term of this patent is extended or adjusted under 35 U.S.C. 154(b) by 419 days.

(21) Appl. No.: **10/529,036**

(22) PCT Filed: **Sep. 29, 2003**

(86) PCT No.: **PCT/JP03/12453**

§ 371 (c)(1),
(2), (4) Date: **Mar. 24, 2005**

(87) PCT Pub. No.: **WO2004/032311**

PCT Pub. Date **Apr. 15, 2004**

(65) **Prior Publication Data**

US 2006/0042072 A1 Mar. 2, 2006

(30) **Foreign Application Priority Data**

Oct. 4, 2002 (JP) ..... 2002-292164

(51) **Int. Cl.**
*H02K 15/00* (2006.01)

(52) **U.S. Cl.** ..... 29/596; 29/598; 29/605; 242/432.1

(58) **Field of Classification Search** ..... 29/596–598, 29/605–609, 732–736; 242/432.4; 310/42, 310/207; 140/91.1, 91.2
See application file for complete search history.

(56) **References Cited**

U.S. PATENT DOCUMENTS

| | | | | |
|---|---|---|---|---|
| 4,918,347 | A * | 4/1990 | Takaba | 310/179 |
| 5,090,110 | A * | 2/1992 | Murakoshi et al. | 29/596 |
| 6,782,600 | B2 * | 8/2004 | Yamazaki et al. | 29/596 |
| 7,281,312 | B2 * | 10/2007 | Sadiku et al. | 29/596 |

FOREIGN PATENT DOCUMENTS

| | | |
|---|---|---|
| JP | 2000-270524 | 9/2000 |
| JP | 2001-103716 | 4/2001 |
| JP | 2001-119885 | 4/2001 |
| JP | 2001-339917 | 12/2001 |
| JP | 2002-78300 | 3/2002 |
| JP | 2002-14216 | 5/2002 |

* cited by examiner

*Primary Examiner*—Minh Trinh
(74) *Attorney, Agent, or Firm*—Steptoe & Johnson LLP

(57) **ABSTRACT**

According to a nozzle winding method of causing a nozzle (41) to pass between adjacent magnetic poles (12) and rotating the nozzle (41) around the magnetic pole (12), winding is carried out until the rotating nozzle (41) interferes with wound coils (201 to 242), so that a high space factor is obtained. Thereafter, according to a cam winding method, winding is carried out in a space remaining in a slot while rotating the nozzle (41) in an area not interfering with the coils (201 to 242) in the slot, thereby achieving winding with a high space factor of coils in the entire space of the slot.

**5 Claims, 5 Drawing Sheets**

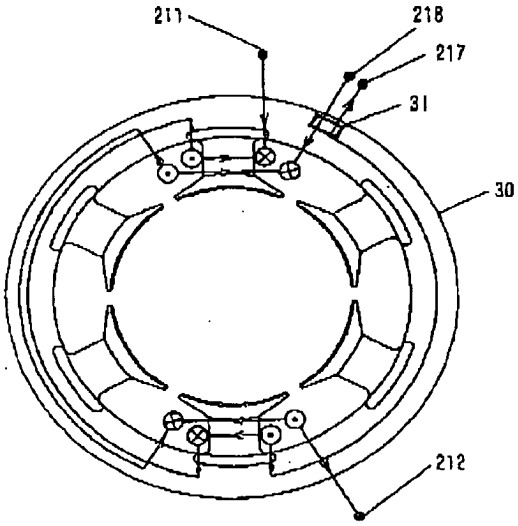


APPENDIX A

RECEIVED
CENTRAL FAX CENTER
DEC 3 0 2008

ATTY.DKT.28951.5379

IN THE UNITED STATES PATENT AND TRADEMARK OFFICE

In re the Patent of

Akihiko YAMAZAKI et al

Patent No.: 7,421,774

Issue Date: September 9, 2008

Title: WINDING METHOD FOR STATOR OF MOTOR

**REQUEST FOR CERTIFICATE OF CORRECTION PURSUANT TO 37 CFR 1.323**

Commissioner of Patents
P.O. Box 1450
Alexandria, Virginia 22313-1450

ATTN: Certificate of Correction Branch

September 18, 2008

Sir:

It is respectfully requested that a Certificate of Correction be issued in order to correct the error made by applicant, as specified in the attached copy of the Certificate of Correction form (PTO/SB/44).

The requested change is to add the assignee, Hayashi Industrial Co., Ltd., Gifu, Japan.

Inasmuch as the requested correction is minor in nature, occurred in good faith, and is not believed to constitute new matter or require reexamination, issuance of a Certificate of Correction is respectfully requested.

The Commissioner is hereby authorized to charge the fee pursuant to 37 CFR 1.20(a) to Deposit Account 19-4293.

Respectfully submitted,

STEPTOE & JOHNSON LLP

Roger W. Parkhurst
Registration No. 25,177

1330 Connecticut Avenue, NW
Washington, DC 20036-1795

ADDENDUM B

PTO/SB/44 (09-07)
Approved for use through 08/31/2010. OMB 0651-0033
U.S. Patent and Trademark Office; U.S. DEPARTMENT OF COMMERCE
Under the Paperwork Reduction Act of 1995, no persons are required to respond to a collection of information unless it displays a valid OMB control number.
(Also Form PTO-1050)

# UNITED STATES PATENT AND TRADEMARK OFFICE
# CERTIFICATE OF CORRECTION

Page 1 of 1

PATENT NO. : 7,421,774 B2

APPLICATION NO.: 10/529,036

ISSUE DATE : September 9, 2008

INVENTOR(S) : Akihiko YAMAZAKI et al

It is certified that an error appears or errors appear in the above-identified patent and that said Letters Patent is hereby corrected as shown below:

(73) Assignees: Matsushita Electric Industrial Co., Ltd., Osaka (JP)
Hayashi Industrial Co., Ltd., Gifu (JP)

MAILING ADDRESS OF SENDER (Please do not use customer number below):

STEPTOE & JOHNSON LLP
1330 Connecticut Ave., NW
Washington, DC 20036

This collection of information is required by 37 CFR 1.322, 1.323, and 1.324. The information is required to obtain or retain a benefit by the public which is to file (and by the USPTO to process) an application. Confidentiality is governed by 35 U.S.C. 122 and 37 CFR 1.14. This collection is estimated to take 1.0 hour to complete, including gathering, preparing, and submitting the completed application form to the USPTO. Time will vary depending upon the individual case. Any comments on the amount of time you require to complete this form and/or suggestions for reducing this burden, should be sent to the Chief Information Officer, U.S. Patent and Trademark Office, U.S. Department of Commerce, P.O. Box 1450, Alexandria, VA 22313-1450. DO NOT SEND FEES OR COMPLETED FORMS TO THIS ADDRESS. SEND TO: **Attention Certificate of Corrections Branch, Commissioner for Patents, P.O. Box 1450, Alexandria, VA 22313-1450.**

*If you need assistance in completing the form, call 1-800-PTO-9199 and select option 2.*

RECEIVED
CENTRAL FAX CENTER
DEC 30 2008

**UNITED STATES PATENT AND TRADEMARK OFFICE**

UNDER SECRETARY OF COMMERCE FOR INTELLECTUAL PROPERTY AND
DIRECTOR OF THE UNITED STATES PATENT AND TRADEMARK OFFICE

MARCH 27, 2008

PTAS

ROGER W. PARKHURST/STEPTOE & JOHNSON LLP
1330 CONNECTICUT AVENUE, N.W.
WASHINGTON, DC 20036-1795

*500498594A*
Received
MAR 28 2008
Steptoe & Johnson LLP
Docketing Dept.

UNITED STATES PATENT AND TRADEMARK OFFICE
NOTICE OF RECORDATION OF ASSIGNMENT DOCUMENT

THE ENCLOSED DOCUMENT HAS BEEN RECORDED BY THE ASSIGNMENT DIVISION OF THE U.S. PATENT AND TRADEMARK OFFICE. A COMPLETE MICROFILM COPY IS AVAILABLE AT THE ASSIGNMENT SEARCH ROOM ON THE REEL AND FRAME NUMBER REFERENCED BELOW.

PLEASE REVIEW ALL INFORMATION CONTAINED ON THIS NOTICE. THE INFORMATION CONTAINED ON THIS RECORDATION NOTICE REFLECTS THE DATA PRESENT IN THE PATENT AND TRADEMARK ASSIGNMENT SYSTEM. IF YOU SHOULD FIND ANY ERRORS OR HAVE QUESTIONS CONCERNING THIS NOTICE, YOU MAY CONTACT THE EMPLOYEE WHOSE NAME APPEARS ON THIS NOTICE AT 571-272-3350. PLEASE SEND REQUEST FOR CORRECTION TO: U.S. PATENT AND TRADEMARK OFFICE, MAIL STOP: ASSIGNMENT SERVICES BRANCH, P.O. BOX 1450, ALEXANDRIA, VA 22313.

RECORDATION DATE: 03/27/2008

REEL/FRAME: 020713/0369
NUMBER OF PAGES: 4

BRIEF: ASSIGNMENT OF ASSIGNOR'S INTEREST (SEE DOCUMENT FOR DETAILS).
DOCKET NUMBER: 28951.5379

ASSIGNOR:
MATSUSHITA ELECTRIC INDUSTRIAL CO., LTD.

DOC DATE: 06/04/2007

ASSIGNEE:
HAYASHI INDUSTRIAL CO., LTD.
1363-1 SENDANBAYASHI
NAKATSUGAWA-SHI, GIFU, JAPAN

509-9131

SERIAL NUMBER: 10529036
PATENT NUMBER:
TITLE: METHOD OF WINDING STATOR IN MOTOR

FILING DATE: 03/24/2005
ISSUE DATE:



DOCKETED



ADDENDIX C

020713/0369 PAGE 2

ASSIGNMENT SERVICES BRANCH
PUBLIC RECORDS DIVISION

UNITED STATES PATENT AND TRADEMARK OFFICE

Commissioner for Patents
United States Patent and Trademark Office
P.O. Box 1450
Alexandria, VA 22313-1450
www.uspto.gov

COPY MAILED

OCT 13 2009

OFFICE OF PETITIONS

**STEPTOE & JOHNSON LLP**
**1330 CONNECTICUT AVE., NW**
**WASHINGTON DC 20036**

| | | |
|---|---|---|
| In re Patent No. 7,421,774 | : | |
| Issue Date: September 9, 2008 | : | |
| Application No. 10/529,036 | : | ON PETITION |
| Filed: March 24, 2005 | : | |
| Attorney Docket No. 28951.5379 | : | |

This is a decision on the petition filed June 9, 2009, which is being treated as a request under 37 CFR 3.81(b)[1] to correct the name of the assignee on the front page of the above-identified patent by way of a Certificate of Correction.

The request is **GRANTED**.

Telephone inquiries concerning this decision may be directed to the undersigned at (571) 272-6842. Inquiries regarding the issuance of a certificate of correction should be directed to the Certificate of Correction Branch at (571) 272-4200.

The Certificates of Correction Branch will be notified of this decision granting the petition under 37 CFR 3.81(b) and directing issuance of the requested Certificate of Correction.

Carl Friedman
Petitions Examiner
Office of Petitions

[1] *See* MPEP 1309, subsection II; and Official Gazette of June 22, 2004.

0 9 NOV 2006

UNITED STATES PATENT AND TRADEMARK OFFICE

Commissioner for Patents
United States Patent and Trademark Office
P.O. Box 1450
Alexandria, VA 22313-1450
www.uspto.gov

PHILIPS INTELLECTUAL PROPERTY & STANDARDS
P.O. BOX 3001
BRIARCLIFF MANOR NY 10510

| | | |
|---|---|---|
| In Re Application of<br>SALOMA et al.<br>Application No.: 10/529,043<br>PCT No.: PCT/PH02/00018<br>Int. Filing Date: 27 September 2002<br>Priority Date: None<br>Attorney Docket No.: 0002200USU/2280<br>For: TWO-COLOR (TWO PHOTON) EXCITATION<br>BEAMS AND A RAMAN SHIFTER | : | DECISION |

This is a decision on applicant's "Petition to Withdraw Holding of Abandonment under 37 CFR 1.181(a)", requesting withdrawal of the 21 July 2006 Notification of Abandonment. The petition was filed in the United States Patent and Trademark Office (USPTO) on 2 August 2006.

On 27 September 2002, applicant filed international application No. PCT/PH02/00018 with an executed declaration under PCT Rule 4.17. The international application designated the United States but did not claim a priority date. Thereafter, on 24 March 2005, before the expiration of the thirty month period, applicant filed, *inter alia*, a transmittal letter for entry into the national stage and the basic national stage filing fee.

On 28 July 2005, a Notification of Missing Requirements (Form PCT/DO/EO/905) was mailed to applicant indicating that an oath or declaration, in compliance with 37 CFR 1.497(a) and (b), and the surcharge for filing the oath or declaration, was required.

On 15 September 2005, applicant filed a response to the 905, indicating that the declaration and power of attorney was filed under PCT Rule 4.17(iv).

On 21 July 2006, a Notification of Abandonment (Form PCT/DO/EO/909) was mailed to applicant indicating that applicant had not responded to the 905.

On 2 August 2006, applicant filed the instant petition indicating that the declaration was filed with the international application on 27 September 2002 along with a copy of the Request. Applicant urges that the Form PCT/DO/EO/909 be vacated.

## DISCUSSION

It appears that executed declarations, pursuant to PCT Rule 4.17, were filed with the International application as part of the Request on 27 September 2002. Applicant submitted two declarations of inventorship, under PCT Rule 4.17(iv), where one declaration listed two inventors and the second declaration listed the third inventor. Where all inventors did not sign the same

declaration, each declaration shall indicate the names of all inventors. See Administrative Instructions Under the PCT, Section 214(a) and (b). Since applicant submitted two declarations under Rule 4.17 and these declarations did not list all inventors on each declaration, the declarations are unacceptable and are not in compliance with 37 CFR 1.497(a) and (b).

The Notification of Missing Requirements mailed on 28 July 2005 did not identify the defect in the declarations and is hereby **VACATED**. The Notification of Abandonment (Form PCT/DO/EO/909) mailed on 21 July 2006 is hereby **VACATED**.

What is required is a newly executed declaration, which identifies all the inventors, and states the citizenship, residency and mailing address of all inventors.

## CONCLUSION

The petition under 37 CFR 1.181 is **GRANTED**. The Notification of Missing Requirements mailed on 28 July 2005 is hereby **VACATED**. The Notification of Abandonment (Form PCT/DO/EO/909) mailed on 21 July 2006 is hereby **VACATED**.

The declaration submitted with the international application is unacceptable under the PCT Administrative Instructions and does not meet the requirements of 37 CFR 1.497(a) & (b). As set forth above, a newly executed declaration is required.

This application will be forwarded to the United States Designated/Elected Office for further processing, including issuance of a new Notification of Missing Requirements, in accord with this decision.

Any further correspondence with respect to this matter should be addressed to the Mail Stop PCT, Commissioner for Patents, Office of PCT Legal Administration, P.O. Box 1450, Alexandria, Virginia 22313-1450, with the contents of the letter marked to the attention of the Office of PCT Legal Administration.

Cynthia M. Kratz

Cynthia M. Kratz
Attorney Advisor
PCT Legal Office
Office of PCT Legal Administration

Telephone: (571) 272-3286
Facsimile: (571) 273-0459

UNITED STATES PATENT AND TRADEMARK OFFICE

Commissioner for Patents
United States Patent and Trademark Office
P.O. Box 1450
Alexandria, VA 22313-1450
www.uspto.gov

18 MAY 2007

PHILIPS INTELLECTUAL PROPERTY & STANDARDS
P.O. BOX 3001
BRIARCLIFF MANOR NY 10510

| | | |
|---|---|---|
| In Re Application of<br>SALOMA et al.<br>Application No.: 10/529,043<br>PCT No.: PCT/PH02/00018<br>Int. Filing Date: 27 September 2002<br>Priority Date: None<br>Attorney Docket No.: 0002200USU/2280<br>For: TWO-COLOR (TWO PHOTON) EXCITATION BEAMS AND A RAMAN SHIFTER | : | DECISION |

This is a decision on applicant's "Petition for reconsideration of the Declaration filed under 4.17", filed in the United States Patent and Trademark Office (USPTO) on 16 January 2007.

## BACKGROUND

On 27 September 2002, applicant filed international application No. PCT/PH02/00018 with an executed declaration under PCT Rule 4.17. The international application designated the United States but did not claim a priority date. Thereafter, on 24 March 2005, before the expiration of the thirty month period, applicant filed, *inter alia*, a transmittal letter for entry into the national stage and the basic national stage filing fee.

On 28 July 2005, a Notification of Missing Requirements (Form PCT/DO/EO/905) was mailed to applicant indicating that an oath or declaration, in compliance with 37 CFR 1.497(a) and (b), and the surcharge for filing the oath or declaration, was required.

On 15 September 2005, applicant filed a response to the 905, indicating that the declaration and power of attorney was filed under PCT Rule 4.17(iv).

On 21 July 2006, a Notification of Abandonment (Form PCT/DO/EO/909) was mailed to applicant indicating that applicant had not responded to the 905.

On 2 August 2006, applicant filed a petition indicating that the declaration was filed with the international application on 27 September 2002 along with a copy of the Request. Applicant urged that the Form PCT/DO/EO/909 be vacated.

On 09 November 2006, a decision dismissing applicant's petition was mailed, indicating that it appeared that applicant had submitted two separate declarations with the Request.

On 16 January 2007, applicant filed the instant petition with an explanation.

## DISCUSSION

The evidence presented is sufficient to conclude that an executed declaration, pursuant to PCT Rule 4.17, was filed with the International application as part of the Request on 27 September 2002. With the instant petition, applicant submitted a complete copy of the Request. A review of Box VIII of the Request (DECLARATIONS) indicates that Declaration of inventorship (only for the purposes of the designation of the United States of America) was contained in Box VIII(iv). At the bottom of Box VIII(iv), it is noted that the check box indicating "This declaration is continued on the following sheet, 'Continuation of Box No. VIII(iv)." was marked. This portion of page 5 was not reproduced in the original petition. It is now clear upon review of the Request, that the declaration under PCT Rule 4.17 indicated the names of all inventors and satisfies the requirements of 37 CFR 1.497(a) and (b).

## CONCLUSION

The "Petition for reconsideration of the Declaration filed under 4.17" is **GRANTED**. The Notification of Acceptance (Form PCT/DO/EO/903) mailed on 26 February 2007 remains in effect.

Cynthia M. Kratz

Cynthia M. Kratz
Attorney Advisor
PCT Legal Office
Office of PCT Legal Administration

Telephone: (571) 272-3286
Facsimile: (571) 273-0459

2 3 MAY 2007

UNITED STATES PATENT AND TRADEMARK OFFICE

Commissioner for Patents
United States Patent and Trademark Office
P.O. Box 1450
Alexandria, VA 22313-1450
www.uspto.gov

OHLANDT, GREELEY, RUGGIERO & PERLE, LLP
ONE LANDMARK SQUARE, 10TH FLOOR
STAMFORD CT 06901

| | | |
|---|---|---|
| In Re Application of<br>SALOMA et al.<br>Application No.: 10/529,043<br>PCT No.: PCT/PH02/00018<br>Int. Filing Date: 27 September 2002<br>Priority Date: None<br>Attorney Docket No.: 0002200USU/2280<br>For: TWO-COLOR (TWO PHOTON) EXCITATION BEAMS AND A RAMAN SHIFTER | : | DECISION |

This decision on applicant's "Petition for reconsideration of the Declaration filed under 4.17" filed in the United States Patent and Trademark Office (USPTO) on 16 January 2007.

## BACKGROUND

On 27 September 2002, applicant filed international application No. PCT/PH02/00018 with an executed declaration under PCT Rule 4.17. The international application designated the United States but did not claim a priority date. Thereafter, on 24 March 2005, before the expiration of the thirty month period, applicant filed, *inter alia*, a transmittal letter for entry into the national stage and the basic national stage filing fee.

On 28 July 2005, a Notification of Missing Requirements (Form PCT/DO/EO/905) was mailed to applicant indicating that an oath or declaration, in compliance with 37 CFR 1.497(a) and (b), and the surcharge for filing the oath or declaration, was required.

On 15 September 2005, applicant filed a response to the 905, indicating that the declaration and power of attorney was filed under PCT Rule 4.17(iv).

On 21 July 2006, a Notification of Abandonment (Form PCT/DO/EO/909) was mailed to applicant indicating that applicant had not responded to the 905.

On 2 August 2006, applicant filed a petition indicating that the declaration was filed with the international application on 27 September 2002 along with a copy of the Request. Applicant urged that the Form PCT/DO/EO/909 be vacated.

On 09 November 2006, a decision dismissing applicant's petition was mailed, indicating that it appeared that applicant had submitted two separate declarations with the Request.

On 16 January 2007, applicant filed the instant petition with an explanation.

## DISCUSSION

The evidence presented is sufficient to conclude that an executed declaration, pursuant to PCT Rule 4.17, was filed with the International application as part of the Request on 27 September 2002. With the instant petition, applicant submitted a complete copy of the Request. A review of Box VIII of the Request (DECLARATIONS) indicates that Declaration of inventorship (only for the purposes of the designation of the United States of America) was contained in Box VIII(iv). At the bottom of Box VIII(iv), it is noted that the check box indicating "This declaration is continued on the following sheet, 'Continuation of Box No. VIII(iv)." was marked. This portion of page 5 was not reproduced in the original petition. It is now clear upon review of the Request, that the declaration under PCT Rule 4.17 indicated the names of all inventors and satisfies the requirements of 37 CFR 1.497(a) and (b).

## CONCLUSION

The "Petition for reconsideration of the Declaration filed under 4.17" is **GRANTED**. The Notification of Acceptance (Form PCT/DO/EO/903) mailed on 26 February 2007 remains in effect.

Cynthia M. Kratz
Attorney Advisor
PCT Legal Office
Office of PCT Legal Administration

Telephone: (571) 272-3286
Facsimile: (571) 273-0459

UNITED STATES PATENT AND TRADEMARK OFFICE

IAP12 Rec'd PCT/PTO 25 MAY 2007

Commissioner for Patents
United States Patent and Trademark Office
P.O. Box 1450
Alexandria, VA 22313-1450
www.uspto.gov

07 18 MAY 2007

PHILIPS INTELLECTUAL PROPERTY & STANDARDS
P.O. BOX 3001
BRIARCLIFF MANOR NY 10510

| | |
|---|---|
| In Re Application of<br>SALOMA et al.<br>Application No.: 10/529,043<br>PCT No.: PCT/PH02/00018<br>Int. Filing Date: 27 September 2002<br>Priority Date: None<br>Attorney Docket No.: 0002200USU/2280<br>For: TWO-COLOR (TWO PHOTON) EXCITATION BEAMS AND A RAMAN SHIFTER | DECISION |

This is a decision on applicant's "Petition for reconsideration of the Declaration filed under 4.17", filed in the United States Patent and Trademark Office (USPTO) on 16 January 2007.

## BACKGROUND

On 27 September 2002, applicant filed international application No. PCT/PH02/00018 with an executed declaration under PCT Rule 4.17. The international application designated the United States but did not claim a priority date. Thereafter, on 24 March 2005, before the expiration of the thirty month period, applicant filed, *inter alia*, a transmittal letter for entry into the national stage and the basic national stage filing fee.

On 28 July 2005, a Notification of Missing Requirements (Form PCT/DO/EO/905) was mailed to applicant indicating that an oath or declaration, in compliance with 37 CFR 1.497(a) and (b), and the surcharge for filing the oath or declaration, was required.

On 15 September 2005, applicant filed a response to the 905, indicating that the declaration and power of attorney was filed under PCT Rule 4.17(iv).

On 21 July 2006, a Notification of Abandonment (Form PCT/DO/EO/909) was mailed to applicant indicating that applicant had not responded to the 905.

On 2 August 2006, applicant filed a petition indicating that the declaration was filed with the international application on 27 September 2002 along with a copy of the Request. Applicant urged that the Form PCT/DO/EO/909 be vacated.

On 09 November 2006, a decision dismissing applicant's petition was mailed, indicating that it appeared that applicant had submitted two separate declarations with the Request.

On 16 January 2007, applicant filed the instant petition with an explanation.

## DISCUSSION

The evidence presented is sufficient to conclude that an executed declaration, pursuant to PCT Rule 4.17, was filed with the International application as part of the Request on 27 September 2002. With the instant petition, applicant submitted a complete copy of the Request. A review of Box VIII of the Request (DECLARATIONS) indicates that Declaration of inventorship (only for the purposes of the designation of the United States of America) was contained in Box VIII(iv). At the bottom of Box VIII(iv), it is noted that the check box indicating "This declaration is continued on the following sheet, 'Continuation of Box No. VIII(iv)." was marked. This portion of page 5 was not reproduced in the original petition. It is now clear upon review of the Request, that the declaration under PCT Rule 4.17 indicated the names of all inventors and satisfies the requirements of 37 CFR 1.497(a) and (b).

## CONCLUSION

The "Petition for reconsideration of the Declaration filed under 4.17" is **GRANTED**. The Notification of Acceptance (Form PCT/DO/EO/903) mailed on 26 February 2007 remains in effect.

Cynthia M. Kratz

Cynthia M. Kratz
Attorney Advisor
PCT Legal Office
Office of PCT Legal Administration

Telephone: (571) 272-3286
Facsimile: (571) 273-0459

UNITED STATES PATENT AND TRADEMARK OFFICE

UNITED STATES DEPARTMENT OF COMMERCE
United States Patent and Trademark Office
Address: COMMISSIONER FOR PATENTS
P.O. Box 1450
Alexandria, Virginia 22313-1450
www.uspto.gov

BSH HOME APPLIANCES CORPORATION
INTELLECTUAL PROPERTY DEPARTMENT
100 BOSCH BOULEVARD
NEW BERN, NC 28562

Mail Date: 04/20/2010

| | | |
|---|---|---|
| **Applicant** | : Rolf Kordon | : DECISION ON REQUEST FOR |
| **Patent Number** | : 7654106 | : RECALCULATION of PATENT |
| **Issue Date** | : 02/02/2010 | : TERM ADJUSTMENT IN VIEW |
| **Appliction No** | : 10/529,046 | : OF WYETH AND NOTICE OF INTENT TO |
| **Filed** | : 03/24/2005 | : ISSUE CERTIFICATE OF CORRECTION |
| | | : |

The Request for Recalculation is **GRANTED** to the extent indicated.

The patent term adjustment has been determined to be **828** days. The USPTO will *sua sponte* issue a certificate of correction reflecting the amount of PTA days determined by the recalculation.

Prior to the issuance of the certificate of correction, the USPTO will afford patentee an opportunity to be heard and request reconsideration. Accordingly, patentee has **one month or thirty (30) days**, whichever is longer, to file a request for reconsideration of this patent term adjustment calculation. See 35 U.S.C. 154(b)(3)(B)(ii) and 37 CFR 1.322(a)(4). No extensions of time will be granted under 37 CFR 1.136.

Patentee should use document code PET.OP if electronically filing a request for reconsideration of this patent term adjustment calculation. The patentee must also include the information required by 37 CFR 1.705(b)(2) and the fee required by 37 CFR 1.18(e). If patentee does not file a timely request for reconsideration of this patent term adjustment calculation including the information required by 37 CFR 1.705(b)(2) and the fee required by 37 CFR 1.18(e), the USPTO will issue a certificate of correction reflecting the PTA determination noted above.

Patentee should be aware that in order to preserve the right to review in the United States District Court for the District of Columbia of the USPTO patent term adjustment determination, patentee must ensure that he or she also take the steps required under 35 U.S.C. 154(b)(4)(A) in a timely manner. Nothing in the request for recalculation should be construed as providing an alternative time frame for commencing a civil action under 35 U.S.C. 154(b)(4)(A).

Any questions concerning this decision should be directed to the Office of Patent Legal Administration at 571-272-7702.

10 AUG 2005

#3

UNITED STATES PATENT AND TRADEMARK OFFICE

COMMISSIONER FOR PATENTS
UNITED STATES PATENT AND TRADEMARK OFFICE
P.O. BOX 1450
ALEXANDRIA, VA 22313-1450
WWW.USPTO.GOV

SUGHRUE MION, PLLC
2100 PENNSYLVANIA AVENUE, N.W.
SUITE 800
WASHINGTON DC 20037

| | |
|---|---|
| In re Application of<br>LEE<br>Application No.: 10/529,053<br>PCT No.: PCT/FR02/03259<br>Int. Filing: 24 September 2002<br>Priority Date: 25 September 2001<br>Attorney Docket No.: Q78061<br>For: TELEVISION DISTRIBUTION SYSTEM AND PROCESSING UNIT USED IN SAID DISTRIBUTION SYSTEM | DECISION ON<br>PETITION UNDER<br>37 CFR 1.137(b) |

The petition to revive under 37 CFR 1.137(b) filed 24 March 2005 in the above-captioned application is hereby **GRANTED** as follows:

Applicant's statement that the "entire delay in filing the required reply from the due date for the required reply until the filing of a grantable petition under 37 CFR 1.137(b) was unintentional" meets the requirements of 37 CFR 1.137(b)(3).

A review of the application file reveals that the basic national fee of $150 has been provided. The required petition fee of $750 was also paid. Thus, the requirements of 37 CFR 1.137(b) have been satisfied. Therefore, the request to revive the application abandoned under 35 U.S.C. 371(d) is granted as to the National stage in the United States of America.

This application is being forwarded to the United States Designated/Elected Office for further processing including issuance of a Notification of Missing Requirements indicating that the oath or declaration in compliance with 37 CFR 1.1497(a) and (b) and the surcharge for filing the oath or declaration after the thirty month period is required.

Per applicant's authorization, the processing fee of $130 for filing the English translation after the thirty month period is charged to applicant's deposit account.

Cynthia M. Kratz

Cynthia M. Kratz
Attorney Advisor
Office of PCT Legal Administration

Telephone: 571-272-3286
Facsimile: 571-273-0459

06 APR 2005

UNITED STATES PATENT AND TRADEMARK OFFICE

COMMISSIONER FOR PATENTS
UNITED STATES PATENT AND TRADEMARK OFFICE
P.O. BOX 1450
ALEXANDRIA, VA 22313-1450
www.uspto.gov

GLAXOSMITHKLINE
Corporate Intellectual Property - UW2220
P.O. Box 1539
King Of Prussia, PA 19406-0939

| | | |
|---|---|---|
| In re Application of: | : | |
| BARBERA MORALES, Ramon, Faustino, et al. | : | |
| U.S. Application No.: 10/529,064 | : | DECISION |
| PCT No.: PCT/EP03/06094 | : | |
| International Filing Date: 10 June 2003 | : | |
| Priority Date: 13 June 2002 | : | |
| Attorney's Docket No.: B45308 | : | |
| For: VACCINE COMPOSITION | : | |

This decision is issued in response to applicants' "Status Inquiry" filed 15 March 2005, treated herein as a petition under 37 CFR 1.181 to confirm the 13 December 2004 filing of the attached national stage materials. No petition fee is required.

## BACKGROUND

On 10 June 2003, applicant filed international application PCT/EP03/06094 which claimed a priority date of 13 June 2002 and which designated the United States. On 24 December 2003, a copy of the international application was communicated to the United States Patent And Trademark Office ("USPTO") by the International Bureau ("IB"). The deadline for payment of the basic national fee was thirty months from the priority date, i.e., 13 December August 2004.

On 15 March 2005, applicants filed the "Status Inquiry" considered herein. This submission was accompanied by, among other materials, copies of the materials purportedly filed on 13 December 2004 to initiate this national stage application and a return postcard that itemizes the earlier submission and bears a USPTO receipt stamp dated 13 December 2004. The petition seeks confirmation of the 13 December 2004 filing.

## DISCUSSION

Based on applicant's statements in the present petition and the attached return postcard, it is concluded that the materials itemized on the return postcard and attached to the present petition (i.e, the transmittal letter, abstract, preliminary amendment, and information disclosure statement) were originally filed in the USPTO on 13 December 2004. The transmittal letter included the authorization to charge Deposit Account 19-2570 for the basic national fee required to avoid abandonment.

## CONCLUSION

Applicants' petition under 37 CFR 1.181 is **GRANTED**. The materials attached to the present petition, including the authorization to charge Deposit Account 19-2570 for the basic national fee, are considered to have been filed on 13 December 2004, prior to the expiration of thirty months from the priority date.

Deposit Account No. 19-2570 will be charged the $300 basic national fee applicable on 13 December 2004.

This application is being forwarded to the National Stage Processing Branch of the Office of PCT Operations for further processing in accord with this decision, including the mailing of a Notification Of Missing Requirements (Form PCT/DO/EO/905) requiring submission of an oath or declaration in compliance with 37 CFR 1.497, the $130 surcharge for filing the oath or declaration later than thirty months after the priority date, and the applicable national stage examination and search fees.

Richard M. Ross
PCT Petitions Attorney
PCT Legal Office
Telephone: (571) 272-3296
Facsimile: (571) 273-0459

UNITED STATES PATENT AND TRADEMARK OFFICE

Commissioner for Patents
United States Patent and Trademark Office
P.O. Box 1450
Alexandria, VA 22313-1450
www.uspto.gov

MERCHANT & GOULD PC
P.O. BOX 2903
MINNEAPOLIS, MN 55402-0903

COPY MAILED
JAN 06 2009

In re Application of
David Wiekhorst et al
Application No. 10/529,067
Filed: January 6, 2006
Attorney Docket No. 2316.1910USWO

ON PETITION

This is a decision on the petition, filed January 5, 2009 under 37 CFR 1.313(c)(2) to withdraw the above-identified application from issue after payment of the issue fee.

The petition is **GRANTED**.

The above-identified application is withdrawn from issue for consideration of a submission under 37 CFR 1.114 (request for continued examination). See 37 CFR 1.313(c)(2).

**Petitioner is advised that the issue fee paid on December 19, 2008 in the above-identified application cannot be refunded. If, however, the above-identified application is again allowed, petitioner may request that it be applied towards the issue fee required by the new Notice of Allowance.**[1]

Telephone inquiries should be directed to Irvin Dingle at (571) 272-3210.

This matter is being referred to Technology Center AU 2831 for processing of the request for continued examination under 37 CFR 1.114 and for consideration of the concurrently filed Information Disclosure Statement and amendment.

/Irvin Dingle/
Irvin Dingle
Petitions Examiner
Office of Petitions

---

[1] The request to apply the issue fee to the new Notice may be satisfied by completing and returning the new Issue Fee Transmittal Form PTOL-85(b), which includes the following language thereon: Commissioner for Patents is requested to apply the Issue Fee and Publication Fee (if any) or re-apply any previously paid issue fee to the application identified above. Petitioner is advised that, whether a fee is indicated as being due or not, the Issue Fee Transmittal Form **must** be completed and timely submitted to avoid abandonment. Note the language in bold text on the first page of the Notice of Allowance and Fee(s) Due (PTOL-85).

UNITED STATES PATENT AND TRADEMARK OFFICE

Commissioner for Patents
United States Patent and Trademark Office
P.O. Box 1450
Alexandria, VA 22313-1450
www.uspto.gov
DIW Mar-08

OTIS ELEVATOR COMPANY
INTELLECTUAL PROPERTY DEPARTMENT
10 FARM SPRINGS
FARMINGTON CT 06032

**COPY MAILED**

MAR 25 2008

**OFFICE OF PETITIONS**

| | | |
|---|---|---|
| In re Application of | : | |
| Marti et al. | : | |
| Application Number: 10/529079 | : | ON PETITION |
| Filing Date: 03/24/2005 | : | |
| Attorney Docket Number: 60469-209; OT-5123 | : | |

This is a decision on the "PETITION FOR WITHDRAWAL OF NOTICE OF ABANDONMENT UNDER 37 C.F.R. 1.181(a) AND CONDITIONAL PETITION TO REVIVE UNINTENTIONALLY ABANDONED APPLICATION UNDER 37 C.F.R. 1.137(b)," which, in view of petitioner's statement that petitioners attempted to timely pay the issue and publication fees, is first treated as a petition under 37 CFR 1.181, to withdraw the holding of abandonment of the above-identified application.

The petition to withdraw the holding of abandonment is **GRANTED**.

The petition under 37 CFR 1.137(b) is **DISMISSED AS MOOT**.

The application was held abandoned for failure to timely submit the issue and publication fees as required by the Notice of Allowance and Fee(s) Due mailed on October 4, 2007. On November 13, 2007, the Fee(s) Transmittal was received, along with a credit card payment of $130.00.[1] On January 29, 2007, a Notice of Abandonment was mailed.

On February 14, 2008, the present petition was filed. Petitioners concede that an incorrect payment amount was inadvertently specified on the credit card payment form submitted with the Fee(s) Transmittal, but state that the application should not be held abandoned because the original Transmittal Letter filed with the application papers contained a general

[1] The amount due for the issue and publication fees was $1,740.00

authorization to charge any required fees to counsel's deposit account.

Petitioner's argument is well taken. A review of the official file reveals that the transmittal letter filed with the application papers on March 24, 2005, contained a general authorization to charge any required fees to counsel's deposit account, No. 50-1482.

Furthermore, MPEP 1306 states, in pertinent part:

> Where it is clear that an applicant actually intends to pay the issue fee and required publication fee, but the proper fee payment is not made, for example, an incorrect issue fee amount is supplied, or a PTOL-85B Fee(s) Transmittal form is filed without payment of the issue fee, a general authorization to pay fees or a specific authorization to pay the issue fee, submitted prior to the mailing of a notice of allowance, will be allowed to act as payment of the correct issue fee. 37 CFR 1.311(b).

As the Fee(s) Transmittal form was timely filed on November 13, 2007, the Office may treat the previously-filed general authorization as evidence of timely payment of the correct issue (and publication) fee(s).

The holding of abandonment is <u>withdrawn</u>. The communication mailed on 26 December, 2006, is <u>vacated</u> to the extent it stated the application was abandoned.

It is noted that the issue and publication fees have been paid with the present petition. As such, no additional fees are due.

As the holding of abandonment has been withdrawn, the petition fee is unnecessary, and will be credited to counsel's deposit account as authorized in the present petition.

The address in the petition is different than the correspondence address. A courtesy copy of this decision is being mailed to the address in the petition. All future correspondence, however, will be mailed solely to the address of record.

The file is being referred to the Office of Data Management for processing into a patent.

All other inquiries regarding this decision may be directed to the undersigned at 571-272-3231.

DWood
Douglas I. Wood
Senior Petitions Attorney
Office of Petitions

Cf:

CARLSON, GASKEY & OLDS
400 W. MAPLE ROAD, SUITE 350
BIRMINGHAM MI 48009

21 SEP 2005

#3

UNITED STATES PATENT and TRADEMARK OFFICE

COMMISSIONER FOR PATENTS
UNITED STATES PATENT AND TRADEMARK OFFICE
P.O BOX 1450
ALEXANDRIA, VA 22313-1450
www.uspto.gov

Steven C. Schnedler
Carter Schnedler & Monteirth, P.A.
56 Central Avenue, Suite 101
P.O. Box 2985
Asheville, NC 28802

| | |
|---|---|
| In re Application of | DECISION ON |
| VOLKER et al | |
| Application No.: 10/529,081 | |
| PCT No.: PCT/EP2003/008214 | |
| Int. Filing Date: 25 July 2003 | PETITION UNDER |
| Priority Date: 2 August 2002 | |
| Attorney's Docket No.: HPB-27 | |
| For: Electromagnetic Actuating Device | 37 CFR 1.137(b) |

This decision is in response to applicants' "Petition For Revival Of An International Application For Patent Designating The U.S. Abandoned Unintentionally Under 37 CFR 1.137(b)," filed on 24 March 2005.

## BACKGROUND

On 25 July 2003, this international application was filed, claiming an earliest priority date of 2 August 2002.

The deadline for paying the basic national fee in the United States under 35 U.S.C. 371 and 37 CFR 1.495 was 2 February 2005. This international application became abandoned with respect to the United States at midnight on 2 February 2005 for failure to pay the required basic national fee.

On 24 March 2005, applicants filed the instant petition under 37 CFR 1.137(b) and a transmittal letter for entry into the national stage in the United States, which was accompanied by the basic national fee and the petition fee, and an executed declaration.

## DISCUSSION

A grantable petition to revive an abandoned application under 37 CFR 1.137(b) must be accompanied by (1) the required reply, unless previously filed. In a nonprovisional application abandoned for failure to prosecute, the required reply may be met by the filing of a continuing application; (2) the petition fee as set forth in § 1.17(m); and (3) a statement that the entire delay in filing the required reply from the due date for the reply until the filing of a grantable petition pursuant to this paragraph was unintentional. The Commissioner may require additional information where there is a question whether the delay was unintentional; and (4) any terminal disclaimer (and fee as set forth in § 1.20 (d)) required pursuant to paragraph (c) of this section.

Petitioner has provided: (1) the proper reply by submitting the basic national filing fee, (2) the petition fee set forth in §1.17(m) and (3) the proper statement under 137(b)(3). In this application, no terminal disclaimer is required.

Accordingly, the petition is deemed to satisfy requirements (1), (2), (3), and (4) under 37 CFR 1.137(b).

**DECISION**

The petition under 37 CFR 1.137(b) is **GRANTED**.

This application is being returned to the United States Designated/Elected Office (DO/EO/US) for continued processing. The 35 USC 371(c)(1), (c)(2), and (c)(4) date of this application is **24 March 2005.**

Rafael Bacares
PCT Legal Examiner
PCT Legal Office
Telephone: (571) 272-3276
Facsimile: (571) 273-0459

UNITED STATES PATENT AND TRADEMARK OFFICE

Commissioner for Patents
United States Patent and Trademark Office
P.O. Box 1450
Alexandria, VA 22313-1450
www.uspto.gov

10 JUL 2006

George W Johnston
Hoffmann-La Roche Inc
340 Kingsland Street
Nutley, NJ 07110

| | | |
|---|---|---|
| In re Application of | : | |
| LANG, Kurt | :: : | |
| U.S. Application No.: 10/529,090 | : | DECISION ON |
| PCT No.: PCT/EP03/10658 | : | |
| Int'l Filing Date: 25 September 2003 | : | PETITION |
| Priority Date: 27 September 2002 | : | |
| Attorney's Docket No.: 20968 | : | UNDER 37 CFR 1.181 |
| For: CONJUGATES OF INSULIN-LIKE | : | |
| ... (ETHYLENE GLYCOL) | : | |

Applicants filed "Petition to Correct Notice of Acceptance," on 02 February 2006.

Applicants have requested that the Office correct both the international application number and the international filing date in the above application. The international application number is correct, but the international filing date will be corrected.

PCT/EP03/10658 and PCT/EP2003/010658 are different naming schemes, but the same application. The international filing date will be corrected to 25 September 2003 and a corrected Notice of Acceptance and filing receipt will be separately forwarded.

The Notice of Acceptance (Form PCT/DO/EO/903) mailed 18 January 2006 is **VACATED**.

For the above reasons, the Petition Under 37 CFR 1.181 is **GRANTED** in part and **DISMISSED** in part. Any further correspondence with respect to this matter should be addressed to the Mail Stop PCT, Commissioner for Patents, Office of PCT Legal Administration, P.O. Box 1450, Alexandria, Virginia 22313-1450, with the contents of the letter marked to the attention of the Office of PCT Legal Administration.

Erin P. Thomson

Erin P. Thomson
Attorney Advisor
PCT Legal Administration

Telephone: 571-272-3292
Facsimile: 571-273-0459

14 NOV 2005

#3

UNITED STATES PATENT AND TRADEMARK OFFICE

Commissioner for Patents
United States Patent and Trademark Office
P.O. Box 1450
Alexandria, VA 22313-1450
www.uspto.gov

Norris McLaughlin & Marcus
875 Third Avenue, 18th Floor
New York, New York 10022

In re Application of
MUSSIG et al.
Application No.: 10/529,092
PCT No.: PCT/EP03/02663
Int. Filing Date: 14 March 2003
Priority Date: 11 April 2002
Attorney Docket No.: 101769-302-WCG
For: SOFT-FLAME-RESISTANT WINDING FILM

DECISION ON PETITION
UNDER 37 CFR 1.137(b)

The petition to revive under 37 CFR 1.137(b) filed 24 March 2005 in the above-captioned application is hereby **GRANTED** as follows:

Applicants' statement that "the entire delay in filing the required reply from the due date for the reply until the filing of a grantable petition under 37 CFR 1.137(b) was unintentional" meets the requirements of 37 CFR 1.137(b)(3).

A review of the application file reveals that applicants have submitted the basic national fee and the requirements of 37 CFR 1.137(b) have been satisfied. Therefore, the request to revive the application abandoned under 35 U.S.C. 371(d) is granted as to the National stage in the United States of America.

This application is being forwarded to the United States Designated/Elected Office (US/DO/EO) for continued processing including the issuance of a Notification of Missing Requirements (Form PCT/DO/EO/905) indicating that an oath or declaration along with the $130 surcharge for filing the oath or declaration after the thirty-month period is required.

Anthony Smith

Anthony Smith
Attorney-Advisor
Office of PCT Legal Administration
Telephone: (571) 272-3298
Facsimile: (571) 273-0459

UNITED STATES PATENT AND TRADEMARK OFFICE

Commissioner for Patents
United States Patent and Trademark Office
P.O. Box 1450
Alexandria, VA 22313-1450
www.uspto.gov

COPY MAILED

SEP 10 2008

**CASTELLANO PLLC**
**P.O. BOX 1555**
**GREAT FALLS VA 22066**

| | | |
|---|---|---|
| In re Application of | : | |
| **DE BALLE COMAS,** Oriol D. | : | |
| Application No. 10/529,102 | : | DECISION ON PETITION |
| Filed: March 24, 2005 | : | TO WITHDRAW |
| Attorney Docket No. **0810.001.0002** | : | FROM RECORD |

This is a decision on the Request to Withdraw as attorney or agent of record under 37 C.F.R. § 1.36(b), filed June 22, 2008.

The request is **APPROVED**.

A grantable request to withdraw as attorney/agent of record must be signed by every attorney/agent seeking to withdraw or contain a clear indication that one attorney is signing on behalf of another/others. The Office requires the practitioner(s) requesting withdrawal to certify that he, she, or they have: (1) given reasonable notice to the client, prior to the expiration of the response period, that the practitioner(s) intends to withdraw from employment; (2) delivered to the client or a duly authorized representative of the client all papers and property (including funds) to which the client is entitled; and (3) notified the client of any responses that may be due and the time frame within which the client must respond, pursuant 37 CFR 10.40(c).

The request was signed by Kristina Castellano, the sole attorney of record. Kristina Castellano has been withdrawn as attorney or agent of record. Applicant is reminded that there is no attorney of record at this time.

All future correspondence will be directed to the first named inventor Joe Smith at the address indicated below.

Telephone inquiries concerning this decision should be directed to Tredelle Jackson at 571-272-2783.

Tredelle D. Jackson
Paralegal Specialist
Office of Petitions

cc: **ORIOL D. DE BALLE COMAS**
**RAMBIA DE CANTALUNYA, NO. 79**
**BARCELONA 08007**
**SPAIN**

03 APR 2006

United States Patent and Trademark Office

#7

Commissioner for Patents
United States Patent and Trademark Office
P.O. Box 1450
Alexandria, VA 22313-1450
www.uspto.gov

Holland & Hart
55517th Street
Suite 3200
Denver CO 80201-8749

| | | |
|---|---|---|
| In re Application of | : | |
| Robins et al. | : | |
| Application No. 10/529,106 | : | |
| PCT No.: PCT/US03/30386 | : | |
| Int. Filing Date: 25 September 2003 | : | DECISION |
| Priority Date: 25 September 2002 | : | |
| Atty. Docket No.: 49506.830001.US1(0007) | : | |
| For: Method For The Preparation Of 2-Halo-2'-Deoxyadenosine Compounds For 2'-Deoxyguanosine | : | |

This is in response to the "Response..." filed on 16 September 2005.

## BACKGROUND

International application PCT/US03/30386 was filed on 25 September 2003, claimed a priority date of 25 September 2002, and designated the United States. The time period in which to pay the basic national fee in the United States expired at midnight on 25 March 2005. On 25 March 2005, applicants filed *inter alia* the basic national fee.

On 15 July 2005, a Notification of Missing Requirements (Form PCT/DO/EO/905) was mailed to applicants, requiring the submission of an oath or declaration compliant with 37 CFR 1.497(a) and (b), a surcharge under 37 CFR 1.492(h), an initial paper or compact disc copy of the "Sequence Listing," an initial computer-readable form ("CRF") of the sequence listing, an amendment directing its entry into the application, and a statement (if appropriate) that no new matter is present.

## DISCUSSION

Regarding the requirement for a declaration in compliance with 37 CFR 1.497(a) and (b), counsel argues that a declaration of the inventors was filed on 09 January 2004 under PCT Rule 4.17(iv). However, inspection of the declaration filed under Rule 4.17(iv) reveals that it is defective because it does not identify the international application number to which it is directed. Therefore, the requirement for submission of an oath or declaration compliant with 37 CFR 1.497(a) and (b) still has not been satisfied.

With regard to the requirements for an initial paper or compact disc copy of the "Sequence Listing," an initial computer-readable form ("CRF") of the sequence listing, an amendment directing its entry into the application, and a statement (if appropriate) that no new matter is present, counsel argues that "no sequence listing is required to be filed. No nucleic acid or amino acid sequence is disclosed or claimed in the present application. Therefore, no sequence listing is required to be filed." In view of this assertion, the requirement for an initial paper or compact disc copy of the "Sequence Listing," an initial computer-readable form ("CRF") of the

sequence listing, an amendment directing its entry into the application, and a statement (if appropriate) that no new matter is present is hereby **VACATED**.

## DECISION

The request to accept the declaration of the inventors is **DISMISSED**, without prejudice.

Applicants are required to file an oath or declaration in compliance with 37 CFR 1.497(a) and (b) within the later of (a) the period for response to the Form PCT/DO/EO/905 mailed on 15 July 2005 (as extended under 37 CFR 1.136(a), or (b) **ONE (1) MONTH** of the mailing date of this decision (**NOT** extendable under 37 CFR 1.136(a)), whichever expires later. Failure to timely file a proper response will result in **ABANDONMENT**.

Please direct any further correspondence with respect to this matter to the Assistant Commissioner for Patents, Mail Stop PCT, P.O. Box 1450, Alexandria, VA 22313-1450, and address the contents of the letter to the attention of the PCT Legal Office.

Leonard Smith
PCT Legal Examiner
Office of PCT Legal Administration

George M. Dombroske
PCT Legal Examiner
Office of PCT Legal Administration
Tel: (571) 272-3283
Fax: (571) 273-0459

United States Patent and Trademark Office

Commissioner for Patents
United States Patent and Trademark Office
P.O. Box 1450
Alexandria, VA 22313-1450
www.uspto.gov

#9

Holland & Hart
55517th Street
Suite 3200
Denver CO 80201-8749

14 AUG 2006

In re Application of
Robins et al.
Application No. 10/529,106
PCT No.: PCT/US03/30386
Int. Filing Date: 25 September 2003
Priority Date: 25 September 2002
Atty. Docket No.: 49506.830001.US1(0007)
For: Method For The Preparation Of 2-Halo-2'-Deoxyadenosine Compounds For 2'-Deoxyguanosine

DECISION

This is in response to the "Supplemental Response..." filed on 21 April 2006.

## DISCUSSION

In a Decision mailed on 03 April 2006, the declaration of the inventors was filed on 09 January 2004 under PCT Rule 4.17(iv) was not accepted, without prejudice, because "inspection of the declaration filed under Rule 4.17(iv) reveals that it is defective because it does not identify the international application number to which it is directed. Therefore, the requirement for submission of an oath or declaration compliant with 37 CFR 1.497(a) and (b) still has not been satisfied."

The instant "Supplemental Response..." includes a declaration which appears to have been altered after it was executed, by having the international application number added to the first page. Since the international application number apparently was added after the declaration was signed, it is not clear that the signing inventors in fact intended to execute this international application. Therefore, the declaration is not in compliance with 37 CFR 1.497(a) and (b). Since the Decision mailed on 03 April 2006 set a non-extendable one month period for the filing of "an oath or declaration in compliance with 37 CFR 1.497(a) and (b)," and since applicants did not in fact file an acceptable oath or declaration prior to the expiration of the period for response, this international application is ABANDONED with regard to the national stage in the United States under 35 U.S.C. 371(d).

## DECISION

The declaration filed on 21 April 2006 is **NOT ACCEPTED** for purposes of compliance with 37 CFR 1.497(a) and (b) and 35 U.S.C. 371(c)(4).

This international application is **ABANDONED** with regard to the national stage in the United States under 35 U.S.C. 371(d).

Please direct any further correspondence with respect to this matter to the Assistant Commissioner for Patents, Mail Stop PCT, P.O. Box 1450, Alexandria, VA 22313-1450, and address the contents of the letter to the attention of the PCT Legal Office.

Leonard Smith
PCT Legal Examiner
Office of PCT Legal Administration

George M. Dombroske
PCT Legal Examiner
Office of PCT Legal Administration
Tel: (571) 272-3283
Fax: (571) 273-0459

United States Patent and Trademark Office

Commissioner for Patents
United States Patent and Trademark Office
P.O. Box 1450
Alexandria, VA 22313-1450
www.uspto.gov

#11

23 OCT 2006

Holland & Hart
55517th Street
Suite 3200
Denver CO 80201-8749

| | | |
|---|---|---|
| In re Application of<br>Robins et al.<br>Application No. 10/529,106<br>PCT No.: PCT/US03/30386<br>Int. Filing Date: 25 September 2003<br>Priority Date: 25 September 2002<br>Atty. Docket No.: 49506.830001.US1(0007)<br>For: Method For The Preparation Of 2-Halo-2'-Deoxyadenosine Compounds For 2'-Deoxyguanosine | : | DECISION |

The petition to revive under 37 CFR 1.137(b) filed 09 October 2006 in the above-captioned application is hereby **GRANTED** as follows:

Applicant states that "the entire delay in filing the required reply from the due date for the required reply until the filing of a grantable petition under 37 CFR 1.137(b) was unintentional." This statement is being accepted in satisfaction of 37 CFR 1.137(b)(3).

A review of the application file reveals that applicants have paid the petition fee, and have filed the required reply in the form of an executed declaration of the inventors in compliance with 37 CFR 1.497(a) and (b). Thus, the requirements of 37 CFR 1.137(b) have been satisfied. Therefore, the request to revive the application abandoned under 35 U.S.C. 371(d) is granted as to the National stage in the United States of America.

This application is being forwarded to the United States Designated/Elected Office for further processing. The date of this application under 35 U.S.C. 371(c)(1), (2) and (4) is **09 October 2006**.

George M. Dombroske
PCT Legal Examiner
Office of PCT Legal Administration
Tel: (571) 272-3283
Fax: (571) 273-0459

02 FEB 2006

#10

UNITED STATES PATENT AND TRADEMARK OFFICE

COMMISSIONER FOR PATENTS
UNITED STATES PATENT AND TRADEMARK OFFICE
P.O. BOX 1450
ALEXANDRIA, VA 22313-1450
www.uspto.gov

KELLY K. KORDZIK
WINSTEAD SECHREST & MINICK P.C.
P.O. BOX 50784
DALLAS, TEXAS 75201

In re Application of Kevin Derichs
Application No.: 10/529,114
PCT Application No.: PCT/US2004/037446
International Filing Date: 9 November 2004
Priority Date: 14 November 2003
Attorney Docket No.: 25438-P014WOUS
For: SIMPLE MATRIX ADDRESSING IN A DISPLAY

: NOTIFICATION

This application is before the Office of PCT Legal Administration for consideration of matters arising under 35 U.S.C. 371.

## BACKGROUND

On 9 November 2004, applicant filed International Application PCT/US2004/037446 designating the United States and claiming a priority date of 14 November 2003. Accordingly, the 30 month date for paying the basic national fee expires 14 May 2006. 37 CFR 1.495(b).

On 24 March 2005, applicant filed a transmittal letter to the United States Designated/Elected Office concerning submission under 35 U.S.C. 371 for International Application PCT/US2004/037446 accompanied by the basic national fee and a copy of PCT Rule 4.17 declaration filed during the international phase.

On 18 November 2005, a Notification of Missing Requirements Under 35 U.S.C. 371 in the United States Designated/Elected Office (Form PCT/DO/EO/905) was mailed to the applicant with the requirement to furnish an oath or declaration of the inventors, in compliance with 37 CFR 1.497(a) and (b), identifying the application by the International Application number and international filing date because the current oath or declaration does not comply with the 37 CFR 1.497(a) and (b) since the oath or declaration does not identify the application to which it is directed.

On 1 December 2005, applicant filed a response to the Notification of Missing requirements mailed on 18 November 2005. The response included a copy of the previously filed declaration signed by the inventor, a copy of the notification relating to declaration made under PCT Rule 4.17 issued by the International Bureau of WIPO on 14 March 2005 accepting the

declaration on 11 March 2005, a copy of the Notification of Missing requirements and a postal receipt card.

## DISCUSSION

The declaration filed 1 December 2005 in response to the Notification of Missing Requirements which is merely a copy of the previously submitted declaration filed under PCT Rule 4.17 does not identify the application to which it is directed. The required Rule 4.17 declaration was submitted after the filing date of the International Application, PCT/US2004/037446. As such, the declaration was required to identify the application to which it is directed by referring to the PCT application number.

## CONCLUSION

Applicant is required to provide an oath or declaration in compliance with 37 CFR 1.497(a) and (b) **within 2 months from the date of mailing of the Notification of Missing Requirements mailed 18 November 2005 or 32 months from the priority date, whichever is later as indicated in such notice.** The time period set above may be extended by filing a petition and fee for extension of time under the provisions of 37 CFR 1.136(a). Failure to timely provide the required reply will result in ABANDONMENT of the application.

Gary L. Welch
PCT Legal Administration Detailee
Telephone: 571-272-6095
Facsimile: 571-273-0459

Boris Milef
PCT Legal Examiner
Office of PCT Legal Administration

UNITED STATES PATENT AND TRADEMARK OFFICE

Commissioner for Patents
United States Patent and Trademark Office
P.O. Box 1450
Alexandria, VA 22313-1450
www.uspto.gov

Date Mailed : March 31, 2009
Serial No. : 10/529116
Patent No. : 7462593 B2
Patent Issued : December 9, 2008
Inventor(s) : Frank Cuttitta, et al.
Title: : COMPOSITIONS AND METHODS FOR PROMOTING ANGIOGENESIS

Re: Request for Certificate of Correction

Consideration has been given your request for the issuance of a certificate of correction for the above-identified patent under the provisions of 37 CFR 1.322 and/or 1.323.

Assignees' names and addresses (assignment data) printed in a patent are based *solely* on information supplied in the appropriate space for identifying the assignment data, i.e., item 3 of the Fee(s) Transmittal Form PTOL-85B. After payment of the issue fee, correction of assignment data submitted on the PTOL-85B can only be done by Certificate of Correction under 37 CFR 1.323, with a request under 37 CFR 3.81(b).

A request for a patent to be corrected to state the name of the assignee must:

A. state that the assignment was submitted for recordation as set forth in 37 CFR 3.11 before issuance of the patent;
B. include a request for a certificate of correction under 37 CFR 1.323 along with the fee set forth in 37 CFR 1.20(a); and
C. include the processing fee set forth in 37 CFR 1.17(i).

If the request is granted, Certificates of Correction Branch will be notified that a Certificate of Correction may be issued.
See Manual of Patent Examining Procedure, Section 1481.01 (Rev. 3) (Oct. 2005).

*Applicant has not included items A and or C above, accordingly, the request for Certificate of Correction to add or change the assignee data is dismissed.*
Any request under 37 CFR 3.81(b) should be directed to the following address or facsimile number:

By mail: Mail Stop PETITIONS
Commissioner for Patents
Post Office Box 1450
Alexandria, VA 22313-1450

By mail: Mail Stop PETITIONS
Commissioner for Patents
Post Office Box 1450
Alexandria, VA 22313-1450

By hand Customer Service Window
Mail Stop Petitions
Randolph Building
401 Dulany Street
Alexandria, VA 22314

By fax: 571-273-8300
ATTN: Office of Petitions

If a fee (currently $100) was previously submitted for consideration of a Request for Certificate of Correction, under CFR 1.323, to correct assignment data, no additional fee is required.

Magdalene Talley
For Cecelia B. Newman, Supervisor
Decisions and Certificate
Of Correction Branch
(703)305-8908 or (703)305-8228
Fax ( 571) -270-9942

Klarquist Sparkman, LLP
One World Trade Center, Ste. 1600
121 SW Salmon Street
Portland, OR 97204

CBN/mt

UNITED STATES PATENT AND TRADEMARK OFFICE

Commissioner for Patents
United States Patent and Trademark Office
P.O. Box 1450
Alexandria, VA 22313-1450
www.uspto.gov

KLARQUIST SPARKMAN, LLP
121 S.W. SALMON STREET
SUITE #1600
PORTLAND OR 97204-2988

MAILED

MAR 23 2010

OFFICE OF PETITIONS

In re Patent No. 7,462,593 :
Issue Date: December 9, 2008 :
Application No. 10/529,116 : ON PETITION
Filed: March 24, 2005 :
Attorney Docket No. 4239-67026-06 :

This is a decision on the petition filed April 8, 2009, which is being treated as a request under 37 CFR 3.81(b)[1] to correct the name of the assignee on the front page of the above-identified patent by way of a Certificate of Correction.

The request is **GRANTED**.

Telephone inquiries concerning this decision may be directed to the undersigned at (571) 272-3215. Inquiries regarding the issuance of a certificate of correction should be directed to the Certificate of Correction Branch at (571) 272-4200.

The Certificates of Correction Branch will be notified of this decision granting the petition under 37 CFR 3.81(b) and directing issuance of the requested Certificate of Correction.

Charlema Grant
Petitions Attorney
Office of Petitions

[1] *See* MPEP 1309, subsection II; and Official Gazette of June 22, 2004.

UNITED STATES PATENT AND TRADEMARK OFFICE

Commissioner for Patents
United States Patent and Trademark Office
P.O. Box 1450
Alexandria, VA 22313-1450
www.uspto.gov

HAMRE, SCHUMANN, MUELLER & LARSON, P.C.
P.O. BOX 2902
MINNEAPOLIS MN 55402-0902

MAILED

FEB 0 9 2009

OFFICE OF PETITIONS

In re Application of
Taguchi, et al.
Application No. 10/529,120
Filed: March 25, 2005
Attorney Docket No. 10921.0294USWO
For: ANALYTICAL TOOL

ON PETITION

This is a decision on the petition under 37 CFR 1.181, filed January 9, 2009, requesting that the Office withdraw the holding of abandonment of the above-identified application.

The petition under 37 CFR 1.181 is **GRANTED**.

This application was held abandoned for failure to respond in a timely manner to the non-final Office action, mailed June 30, 2008, which set forth an extendable three (3) month period for reply. The Office contended that this application became abandoned on October 1, 2008 for failure to reply to the June 30, 2008 non-final Office action. A Notice of Abandonment was mailed on January 6, 2009.

Petitioners request withdrawal of the holding of abandonment based on the assertion that a petition for a three month extension of time and an amendment were timely received in the Office on December 30, 2008. The undersigned finds this argument completely convincing, as these documents are present in the application file and Office financial records shows that the required three month extension of time fee was charged on December 30, 2008. Therefore, the three month extension of time and amendment were timely filed.

The petition under 37 CFR 1.181 is **granted**, the holding of abandonment is withdrawn, and the January 6, 2009 Notice of Abandonment is **vacated**. No petition fee has been or will be charged in connection with this matter.

Accordingly, the application file will be forwarded to Technology Center A.U. 1797 for consideration of the amendment filed on December 30, 2008.

Telephone inquiries pertaining to this matter may be directed to the undersigned at (571) 272-3230.

Shirene Willis Brantley

Shirene Willis Brantley
Senior Petitions Attorney
Office of Petitions

UNITED STATES PATENT AND TRADEMARK OFFICE

UNITED STATES DEPARTMENT OF COMMERCE
United States Patent and Trademark Office
Address: COMMISSIONER FOR PATENTS
P.O. Box 1450
Alexandria, Virginia 22313-1450
www.uspto.gov

MORRISON & FOERSTER LLP
755 PAGE MILL RD
PALO ALTO, CA 94304-1018

Mail Date: 04/27/2010

| | | |
|---|---|---|
| **Applicant** | : Charles R. Cantor | : DECISION ON REQUEST FOR |
| **Patent Number** | : 7662554 | : RECALCULATION of PATENT |
| **Issue Date** | : 02/16/2010 | : TERM ADJUSTMENT IN VIEW |
| **Application No** | : 10/529,122 | : OF WYETH AND NOTICE OF INTENT TO |
| **Filed** | : 09/29/2005 | : ISSUE CERTIFICATE OF CORRECTION |
| | | : |

The Request for Recalculation is **GRANTED** to the extent indicated.

The patent term adjustment has been determined to be **271** days. The USPTO will *sua sponte* issue a certificate of correction reflecting the amount of PTA days determined by the recalculation.

Prior to the issuance of the certificate of correction, the USPTO will afford patentee an opportunity to be heard and request reconsideration. Accordingly, patentee has **one month or thirty (30) days**, whichever is longer, to file a request for reconsideration of this patent term adjustment calculation. See 35 U.S.C. 154(b)(3)(B)(ii) and 37 CFR 1.322(a)(4). No extensions of time will be granted under 37 CFR 1.136.

Patentee should use document code PET.OP if electronically filing a request for reconsideration of this patent term adjustment calculation. The patentee must also include the information required by 37 CFR 1.705(b)(2) and the fee required by 37 CFR 1.18(e). If patentee does not file a timely request for reconsideration of this patent term adjustment calculation including the information required by 37 CFR 1.705(b)(2) and the fee required by 37 CFR 1.18(e), the USPTO will issue a certificate of correction reflecting the PTA determination noted above.

Patentee should be aware that in order to preserve the right to review in the United States District Court for the District of Columbia of the USPTO patent term adjustment determination, patentee must ensure that he or she also take the steps required under 35 U.S.C. 154(b)(4)(A) in a timely manner. Nothing in the request for recalculation should be construed as providing an alternative time frame for commencing a civil action under 35 U.S.C. 154(b)(4)(A).

Any questions concerning this decision should be directed to the Office of Patent Legal Administration at 571-272-7702.

07 SEP 2005

UNITED STATES PATENT AND TRADEMARK OFFICE

Commissioner for Patents
United States Patent and Trademark Office
P.O. Box 1450
Alexandria, VA 22313-1450
www.uspto.gov

Blakely, Sokoloff, Taylor & Zafman, LLP
12400 Wilshire Boulevard, 7th Floor
Los Angeles, CA 90025

| | |
|---|---|
| In re Application of<br>BETSER et al<br>Application No.: 10/529,149<br>PCT No.: PCT/IL03/00430<br>Int. Filing Date: 23 May 2003<br>Priority Date: 23 May 2002<br>Attorney's Docket No.: 3394P020<br>For: ELECTRODE ASSEMBLY FOR NERVE CONTROL | DECISION ON<br>PETITION<br>UNDER 37 CFR 1.137(b) |

The petition to revive under 37 CFR 1.137(b) filed 23 March 2005 in the above-captioned application is hereby **GRANTED** as follows:

Applicant filed on 23 March 2005 the required petition fee, the basic national fee, the national stage search and examination fees, extra claims fees, and a preliminary amendment.

The request to revive the application abandoned under 35 U.S.C. 371(d) is granted as to the National stage in the United States of America.

A declaration and the surcharge for filing the declaration later than 30 months from the priority date are required.

This application is being forwarded to the National Stage Processing Division of the Office of PCT Operations for continued processing.

Leonard E. Smith
PCT Legal Examiner
PCT Legal Affairs
Office of Patent Cooperation Treaty
Legal Administration

LES:ls

Telephone: (571) 272-3297

28 OCT 2005

UNITED STATES PATENT AND TRADEMARK OFFICE

Commissioner for Patents
United States Patent and Trademark Office
P.O. Box 1450
Alexandria, VA 22313-1450
www.uspto.gov

SUGHRUE MION, PLLC
2100 PENNSYLVANIA AVENUE, N.W.
SUITE 800
WASHINGTON DC 20037

| | |
|---|---|
| In re Application of<br>Henri LEE<br>Application No.: 10/529,153<br>PCT No.: PCT/FR02/03260<br>Int. Filing: 24 September 2002<br>Priority Date: 25 September 2001<br>Attorney Docket No.: Q87053<br>For: AUDIO/VIDEO SIGNAL DISTRIBUTION SYSTEM | DECISION ON<br>PETITION UNDER<br>37 CFR 1.137(b) |

The petition to revive under 37 CFR 1.137(b) filed 24 March 2005 in the above-captioned application is hereby **GRANTED** as follows:

Applicant's statement that the "entire delay in filing the required reply from the due date for the required reply until the filing of a grantable petition under 37 CFR 1.137(b) was unintentional" meets the requirements of 37 CFR 1.137(b)(3).

A review of the application file reveals that the basic national fee of $150 has been provided. The required petition fee of $750 was also paid. Thus, the requirements of 37 CFR 1.137(b) have been satisfied. Therefore, the request to revive the application abandoned under 35 U.S.C. 371(d) is granted as to the National stage in the United States of America.

This application is being forwarded to the United States Designated/Elected Office for further processing including the issuance of a Notification of Missing Requirements indicating that the oath or declaration, in compliance with 37 CFR 1.497(a) and (b), and the surcharge for filing the oath or declaration after the thirty month period, is required.

Cynthia M. Kratz

Cynthia M. Kratz
Attorney Advisor
Office of PCT Legal Administration

Telephone: 571-272-3286
Facsimile: 571-273-0459

UNITED STATES PATENT AND TRADEMARK OFFICE

Commissioner for Patents
United States Patent and Trademark Office
P.O. Box 1450
Alexandria, VA 22313-1450
www.uspto.gov

31 DEC 2007

30448
AKERMAN SENTERFITT
P.O. Box 3188
West Palm Beach, FL 33401

In re Application of :
BISCHOFF *et al* :
U.S. Application No.: 10/529,155 :
PCT No.: PCT/GB04/00555 :
Int. Filing Date: 13 February 2004 : **DECISION**
Priority Date: 13 February 2003 :
Docket No.: 3827.131 :
For: SENSOR DEVICE AND METHOD FOR :
DETECTING AN EXTERNAL IMPACT :
LOAD ON A VEHICLE :

This decision is in response to the "Petition to Withdraw Holding of Abandonment Under 37 CFR § 1.181" filed on 26 October 2007. No fee is required.

## BACKGROUND

On 06 January 2006, the United States Designated/Elected Office (DO/EO/US) mailed a Notification of Missing Requirements under 35 U.S.C. 371 (Form PCT/DO/EO/905) indicating that a declaration in compliance with 37 CFR 1.497(a) and (b) must be provided. A two-month time period for response was set with extensions of time available pursuant to 37 CFR 1.136(a).

On 08 May 2006, applicants purportedly filed via facsimile a reply to the Form PCT/DO/EO/905 which was accompanied by, *inter alia*, an executed declaration and authorization to charge a two-month extension fee to Deposit Account No. 50-0951.

On 26 October 2007, applicants filed the subject petition which was accompanied by, *inter alia*, copies of the documents purportedly filed via facsimile on 08 May 2006 and a copy of the facsimile report confirming transmission.

On 21 November 2007, the DO/EO/US mailed a Notification of Acceptance of Application Under 35 U.S.C. 371 (Form PCT/DO/EO/903) indicating a date of receipt of 35 U.S.C. 371(c)(1), (c)(2) and (c)(4) requirements and all 35 U.S.C. 371 requirements of 26 October 2005. A filing receipt indicating a "Filing or 371(c) Date" of "05/17/2005" was also mailed the same day.

## DISCUSSION

Applicants claim that a response to the Form PCT/DO/EO/905 containing an executed declaration was filed via facsimile on 08 May 2006. However, these papers were not located in the file. Applicants have filed the subject petition.

37 CFR 1.8 *Certificate of mailing or transmission*, states in part:

(b) In the event that correspondence is considered timely filed by being mailed or transmitted in accordance with paragraph (a) of this section, but not received in the Patent and Trademark Office, and the application is held to be abandoned or the proceeding is dismissed, terminated, or decided with prejudice, the correspondence will be considered timely if the party who forwarded such correspondence:

(1) Informs the Office of the previous mailing or transmission of the correspondence promptly after becoming aware that the Office has no evidence of receipt of the correspondence;

(2) Supplies an additional copy of the previously mailed or transmitted correspondence and certificate; and

(3) Includes a statement which attests on a personal knowledge basis or to the satisfaction of the Director to the previous timely mailing or transmission. If the correspondence was sent by facsimile transmission, a copy of the sending unit 's report confirming transmission may be used to support this statement.

In the subject petition, applicants have provided a copy of the documents purportedly filed 08 May 2006. Applicants included a "MEMORY TRANSMISSION REPORT" indicating that the facsimile consisting of 11 pages was successfully received in the USPTO on 08 May 2006 at 16:30. The statements in the petition are sufficient to satisfy item (3) of 37 CFR 1.8(b).

A review of the evidence shows that the USPTO received a facsimile on 08 May 2006. The cover page of the facsimile was titled "Response to Notification of Missing Requirements . . . " and lists the proper U.S. application number, title and applicant. This evidence meets the requirements of 37 CFR 1.8(b).

## CONCLUSION

Applicants' petition under 37 CFR 1.8(b) is **GRANTED**.

The declaration originally filed 08 May 2006 is in compliance with 37 CFR 1.497(a) and (b). The two-month extension fee has been charged as authorized.

The Form PCT/DO/EO/903 and Filing Receipt mailed 21 November 2007 contain erroneous data and are both hereby **VACATED**.

This application is being forwarded to the Office of Patent Application Processing for processing including mailing a corrected Form PCT/DO/EO/903 and Filing Receipt indicating that the completion of all 35 U.S.C. 371 requirements and 35 U.S.C. 371(c) date of 08 May 2006, instead of 26 October 2007.

James Thomson

James Thomson
Attorney Advisor
Office of PCT Legal Administration

Tel.: (571) 272-3302

UNITED STATES PATENT AND TRADEMARK OFFICE

Commissioner for Patents
United States Patent and Trademark Office
P.O. Box 1450
Alexandria, VA 22313-1450
www.uspto.gov

**PATENT CENTRAL LLC**
**Stephan A. Pendorf**
**1401 Hollywood Boulevard**
**Hollywood FL 33020**

COPY MAILED

JUN 0 3 2009

OFFICE OF PETITIONS

| | | |
|---|---|---|
| In re Application of | : | |
| Michael Bischoff, et al. | : | |
| Application No. 10/529,155 | : | DECISION ON PETITION |
| Filed: May 8, 2006 | : | TO WITHDRAW |
| Attorney Docket No. 3827.131 | : | FROM RECORD |
| | : | |

This is a decision on the Request to Withdraw as attorney or agent of record under 37 C.F.R. § 1.36(b), filed October 18, 2008.

The request is **NOT APPROVED**.

A grantable request to withdraw as attorney/agent of record must be signed by every attorney/agent seeking to withdraw or contain a clear indication that one attorney is signing on behalf of another/others. A request to withdraw will not be approved unless at least 30 (thirty) days would remain between the date of approval and the later of the expiration date of a time to file a response or the expiration date of the maximum time period which can be extended under 37 C.F.R. § 1.136(a).

The request cannot be approved because the forwarding correspondence address that you have listed on the withdrawal request is not that of the first named inventor and a proper intervening assignee under 37 CFR 3.73(b). The address of the inventors on the oath is not legible.

All future communications from the Office will continue to be directed to the above-listed address until otherwise notified by applicant.

Telephone inquiries concerning this decision should be directed to Terri Williams at 571-272-2991.

Terri Williams
Petitions Examiner
Office of Petitions

cc: **ACTS GmbH & Co. KG**
**Kurfuerst-Eppstein-Ring**
**Sailauf 63877**
**Germany**

UNITED STATES PATENT AND TRADEMARK OFFICE

Commissioner for Patents
United States Patent and Trademark Office
P.O. Box 1450
Alexandria, VA 22313-1450
www.uspto.gov

SAND & SEBOLT
AEGIS TOWER, SUITE 1100
4940 MUNSON STREET, NW
CANTON OH 44718-3615

| | | |
|---|---|---|
| In re Application of | : | |
| Doniney | : | |
| Application No. 10/529,158 | : | DECISION |
| Filed: 24 March, 2005 | : | |
| Attorney Docket No. 1849021US1ANP | : | |

This is a decision on the petition filed on 4 September, 2009, pursuant to 37 C.F.R. §1.137(b) for revival of an application abandoned due to unintentional delay .

The petition under 37 C.F.R. §1.137(b) is **GRANTED**.

As to the Allegations
of Unintentional Delay

The requirements of a grantable petition pursuant to 37 C.F.R. §1.137(b) are the petition and fee therefor, a reply, a proper statement of unintentional delay under the regulation, and, where applicable, a terminal disclaimer and fee.

**Petitioners' attentions always are directed to the guidance in the Commentary at MPEP §711.03(c )(II).**

## BACKGROUND

The record reflects as follows:

Petitioner failed to reply timely and properly to the final Office action mailed on 16 September, 2008, with reply due absent an extension of time on or before 16 December, 2008.

The application went abandoned by operation of law after midnight 16 December, 2008

.

The Office mailed the Notice of Abandonment on 7 July, 2009.

On 4 September, 2009, Petitioner filed, *inter alia*, a petition (with fee) pursuant to 37 C.F.R. §1.137(b), a reply in the form of a request for continued examination and fee with a submission

in the form an amendment pursuant to 37 C.F.R. §1.114, and made the statement of unintentional delay.

The availability of applications and application papers online to applicants/practitioners who diligently associate their Customer Number with the respective application(s) now provides an applicant/practitioner on-demand information as to events/transactions in an application.

Out of an abundance of caution, Petitioners always are reminded that those registered to practice and all others who make representations before the Office **must** inquire into the underlying facts of representations made to the Office and support averments with the appropriate documentation–since all owe to the Office the continuing duty to disclose.[1]

## STATUTES, REGULATIONS AND ANALYSIS

Congress has authorized the Commissioner to "revive an application if the delay is shown to the satisfaction of the Commissioner to have been "unavoidable." 35 U.S.C. §133 (1994).[2]
The regulations at 37 C.F.R. §1.137(a) and (b) set forth the requirements for a Petitioner to revive a previously unavoidably or unintentionally, respectively, abandoned application under this congressional grant of authority.

Unintentional delays are those that do not satisfy the very strict statutory and regulatory requirements of unavoidable delay, and also, by definition, are not intentional.[3]))

### As to Allegations of Unintentional Delay

The requirements of a grantable petition pursuant to 37 C.F.R. §1.137(b) are the petition and fee therefor, a reply, a proper statement of unintentional delay under the regulation, and, where applicable, a terminal disclaimer and fee.

It appears that the requirements under the rule have been satisfied.

---

[1] See supplement of 17 June, 1999. The Patent and Trademark Office is relying on petitioner's duty of candor and good faith and accepting a statement made by Petitioner. See Changes to Patent Practice and Procedure, 62 Fed. Reg. at 53160 and 53178, 1203 Off. Gaz. Pat. Office at 88 and 103 (responses to comments 64 and 109)(applicant obligated under 37 C.F.R. §10.18 to inquire into the underlying facts and circumstances when providing statements to the Patent and Trademark Office).

[2] 35 U.S.C. §133 provides:

**35 U.S.C. §133 Time for prosecuting application.**
Upon failure of the applicant to prosecute the application within six months after any action therein, of which notice has been given or mailed to the applicant, or within such shorter time, not less than thirty days, as fixed by the Commissioner in such action, the application shall be regarded as abandoned by the parties thereto, unless it be shown to the satisfaction of the Commissioner that such delay was unavoidable.

[3] Therefore, by example, an unintentional delay in the reply might occur if the reply and transmittal form are to be prepared for shipment by the US Postal Service, but other pressing matters distract one's attention and the mail is not timely deposited for shipment.

## CONCLUSION

Accordingly, the petition under 37 C.F.R. §1.137(b) is **granted**.

The instant application is released to the Technology Center/AU 1792 for further processing in due course.

Petitioner may find it beneficial to view Private PAIR within a fortnight of the instant decision to ensure that the revival has been acknowledged by the TC/AU in response to this decision. It is noted that all inquiries with regard to that change in status need be directed to the TC/AU where that change of status must be effected—that does not occur in the Office of Petitions.

Telephone inquiries regarding this decision may be directed to the undersigned at (571) 272-3214—it is noted, however, that all practice before the Office is in writing (see: 37 C.F.R. §1.2[4]) and the proper authority for action on any matter in this regard are the statutes (35 U.S.C.), regulations (37 C.F.R.) and the commentary on policy (MPEP). Therefore, no telephone discussion may be controlling or considered authority for Petitioner's action(s).

/John J. Gillon, Jr./
John J. Gillon, Jr.
Senior Attorney
Office of Petitions

---

[4] The regulations at 37 C.F.R. §1.2 provide:
**§1.2 Business to be transacted in writing.**
All business with the Patent and Trademark Office should be transacted in writing. The personal attendance of applicants or their attorneys or agents at the Patent and Trademark Office is unnecessary. The action of the Patent and Trademark Office will be based exclusively on the written record in the Office. No attention will be paid to any alleged oral promise, stipulation, or understanding in relation to which there is disagreement or doubt.

UNITED STATES PATENT AND TRADEMARK OFFICE

UNITED STATES DEPARTMENT OF COMMERCE
United States Patent and Trademark Office
Address: COMMISSIONER FOR PATENTS
P.O. Box 1450
Alexandria, Virginia 22313-1450
www.uspto.gov

ROBIC
CENTRE CDP CAPITAL
1001, VICTORIA SQUARE - BLOC E - 8TH FLOOR
MONTREAL, QC H2Z 2B7
CANADA

Mail Date: 04/21/2010

| | | |
|---|---|---|
| **Applicant** | : Sylvie Fradette | : DECISION ON REQUEST FOR |
| **Patent Number** | : 7596952 | : RECALCULATION of PATENT |
| **Issue Date** | : 10/06/2009 | : TERM ADJUSTMENT IN VIEW |
| **Appliction No** | : 10/529,168 | : OF WYETH AND NOTICE OF INTENT TO |
| **Filed** | : 03/24/2005 | : ISSUE CERTIFICATE OF CORRECTION |
| | | : |

The Request for Recalculation is **GRANTED** to the extent indicated.

The patent term adjustment has been determined to be **1220** days. The USPTO will *sua sponte* issue a certificate of correction reflecting the amount of PTA days determined by the recalculation.

Prior to the issuance of the certificate of correction, the USPTO will afford patentee an opportunity to be heard and request reconsideration. Accordingly, patentee has **one month or thirty (30) days**, whichever is longer, to file a request for reconsideration of this patent term adjustment calculation. See 35 U.S.C. 154(b)(3)(B)(ii) and 37 CFR 1.322(a)(4). No extensions of time will be granted under 37 CFR 1.136.

Patentee should use document code PET.OP if electronically filing a request for reconsideration of this patent term adjustment calculation. The patentee must also include the information required by 37 CFR 1.705(b)(2) and the fee required by 37 CFR 1.18(e). If patentee does not file a timely request for reconsideration of this patent term adjustment calculation including the information required by 37 CFR 1.705(b)(2) and the fee required by 37 CFR 1.18(e), the USPTO will issue a certificate of correction reflecting the PTA determination noted above.

Patentee should be aware that in order to preserve the right to review in the United States District Court for the District of Columbia of the USPTO patent term adjustment determination, patentee must ensure that he or she also take the steps required under 35 U.S.C. 154(b)(4)(A) in a timely manner. Nothing in the request for recalculation should be construed as providing an alternative time frame for commencing a civil action under 35 U.S.C. 154(b)(4)(A).

Any questions concerning this decision should be directed to the Office of Patent Legal Administration at 571-272-7702.

UNITED STATES PATENT AND TRADEMARK OFFICE

Commissioner for Patents
United States Patent and Trademark Office
P.O. Box 1450
Alexandria, VA 22313-1450
www.uspto.gov

12 SEP 2006

12 SEP 2006

IP STRATEGIES
12 1/2 WALL STREET
SUITE I
ASHEVILLE NC 28801

| | |
|---|---|
| In re Application of:<br>TROPF, Hermann<br>U.S. Application No.: 10/529,174<br>PCT No.: PCT/EP2003/010411<br>International Filing Date: 18 September 2003<br>Priority Date: 23 September 2002<br>Atty Docket No.: BSSNP09<br>For: DETECTION AND GRIPPING OF OBJECTS | DECISION ON PETITION |

The petition for revival under 37 CFR 1.137(b) filed 11 July 2006 in the above-captioned application is hereby **GRANTED** as follows:

Applicant's statement that "the entire delay in filing the required reply from the due date for the required reply until the filing of a grantable petition under 37 CFR 1.137(b) was unintentional" satisfies the requirements of 37 CFR 1.137(b)(3).

Applicant has now submitted a proper response to the Notification Of Missing Requirements (Form PCT/DO/EO/905) mailed 08 December 2005 (i.e., an executed declaration and a translation of the international application and the preliminary amendment into English) and the requirements of 37 CFR 1.137(b) have been satisfied. Therefore, the request to revive the application is granted as to the national stage in the United States of America.

This application is being referred to the National Stage Processing Division of the Office of PCT Operations for further processing in accordance with this decision. The date under 35 U.S.C. 371(c)(1), (c)(2), and (c)(4) is 11 July 2006.

Richard M. Ross
Attorney Advisor
Office of PCT Legal Administration
Telephone: (571) 272-3296
Facsimile: (571) 273-0459

UNITED STATES PATENT AND TRADEMARK OFFICE

Commissioner for Patents
United States Patent and Trademark Office
P.O. Box 1450
Alexandria, VA 22313-1450
www.uspto.gov
DIW Mar-07

YOUNG & THOMPSON
745 SOUTH 23RD STREET
2ND FLOOR
ARLINGTON VA 22202

**COPY MAILED**

MAR 27 2007

**OFFICE OF PETITIONS**

| | | |
|---|---|---|
| In re Application of | : | |
| Brian Cottrell | : | |
| Application No. 10/529,178 | : | DECISION ON PETITION |
| Filed: 24 March, 2005 | : | |
| Attorney Docket No. 3009-1015 | : | |

This is a decision on the "PETITION UNDER 37 CFR §1.181 TO WITHDRAW THE HOLDING OF ABANDONMENT," filed 9 January, 2007.

The petition is **GRANTED**.

On 28 June, 2006, the Office mailed a non-final Office action, which set a three-month shortened statutory period for reply. In the apparent absence of a timely filed response, the application was held abandoned on 29 September, 2006. Notice of Abandonment was mailed on 18 January, 2007.

In the petition, applicant asserted that the practitioner did not receive the non-final Office action. Specifically, the practitioner asserts that the Office action was returned to the USPTO as undeliverable.

In the absence of any irregularity in the mailing of the non-final Office action, there is a strong presumption that the final Office action was properly mailed to practitioner at the address of record. This presumption may be overcome by a showing that the final Office action was not in fact received. The showing required to establish the failure to receive an Office communication must include a statement from the practitioner stating that the Office communication was not received by the

practitioner and attesting to the fact that a search of the file jacket and docket records indicates that the Office action was not received. A copy of the docket record where the non-received Office action would have been entered had it been received and docketed must be attached to and referenced in practitioner's statement. See "Withdrawing the Holding of Abandonment When Office Actions Are Not Received" 1156 Official Gazette 53 (November 16, 1993) and M.P.E.P. § 711.03(c). The showing outlined above may not be sufficient if there are circumstances that point to a conclusion that the final Office action may have been lost after receipt rather than a conclusion that the final Office action was lost in the mail.

A review of the record indicates that the Office action was properly mailed to the petitioner at the correspondence address of record at the time of mailing. Thus, there was no irregularity in mailing the Office action on the part of the United States Patent and Trademark Office.

In support of the petition, the petitioner has submitted a statement by registered practitioner Benoit Castel attesting to the fact that a search of the file jacket and docket records indicates that the Office action was not received. A copy of petitioner's file jacket and docket record is supplied with the petition.

A review of the record indicates that the USPTO mailed the nonfinal Office action to the correct correspondence address; however, it was inexplicably returned to the USPTO on 10 July, 2006.[1] For this reason, the practitioner did not receive the nonfinal Office action of 28 June, 2006.

The petitioner has made a sufficient showing of nonreceipt of the Office action. Accordingly, the Notice of Abandonment is hereby vacated and the holding of abandonment withdrawn.

As such, the holding of abandonment is **withdrawn**. The application is restored to pending status.

The petition is **GRANTED.**

The application file is being referred to Technology Center 2800 technical support staff for remailing of the non-final Office

[1] The returned Office action was incorrectly coded as "Final Rejection Mailed" in the Office's Image File Wrapper (IFW) system. The coding error has now been corrected in Office records.

action mailed on 28 July, 2006. The period for reply will be reset from the mailing date thereof.

Telephone inquiries concerning this decision may be directed to the undersigned at (571) 272-3231. Any other questions regarding the status of the application or the examination process should be directed to the Technology Center.

DWood

Douglas I. Wood
Senior Petitions Attorney
Office of Petitions

UNITED STATES PATENT AND TRADEMARK OFFICE

UNITED STATES DEPARTMENT OF COMMERCE
United States Patent and Trademark Office
Address: COMMISSIONER FOR PATENTS
P.O. Box 1450
Alexandria, Virginia 22313-1450
www.uspto.gov

YOUNG & THOMPSON
209 Madison Street
Suite 500
Alexandria, VA 22314

Mail Date: 07/01/2010

| | | |
|---|---|---|
| **Applicant** | : Jerome Boumnso | : DECISION ON REQUEST FOR |
| **Patent Number** | : 7641078 | : RECALCULATION of PATENT |
| **Issue Date** | : 01/05/2010 | : TERM ADJUSTMENT IN VIEW |
| **Application No** | : 10/529,179 | : OF WYETH AND NOTICE OF INTENT TO |
| **Filed** | : 01/05/2006 | : ISSUE CERTIFICATE OF CORRECTION |
| | | : |

The Request for Recalculation is **GRANTED** to the extent indicated.

The patent term adjustment has been determined to be **1037** days. The USPTO will *sua sponte* issue a certificate of correction reflecting the amount of PTA days determined by the recalculation.

Prior to the issuance of the certificate of correction, the USPTO will afford patentee an opportunity to be heard and request reconsideration. Accordingly, patentee has **one month or thirty (30) days**, whichever is longer, to file a request for reconsideration of this patent term adjustment calculation. See 35 U.S.C. 154(b)(3)(B)(ii) and 37 CFR 1.322(a)(4). No extensions of time will be granted under 37 CFR 1.136.

Patentee should use document code PET.OP if electronically filing a request for reconsideration of this patent term adjustment calculation. The patentee must also include the information required by 37 CFR 1.705(b)(2) and the fee required by 37 CFR 1.18(e). If patentee does not file a timely request for reconsideration of this patent term adjustment calculation including the information required by 37 CFR 1.705(b)(2) and the fee required by 37 CFR 1.18(e), the USPTO will issue a certificate of correction reflecting the PTA determination noted above.

Patentee should be aware that in order to preserve the right to review in the United States District Court for the District of Columbia of the USPTO patent term adjustment determination, patentee must ensure that he or she also take the steps required under 35 U.S.C. 154(b)(4)(A) in a timely manner. Nothing in the request for recalculation should be construed as providing an alternative time frame for commencing a civil action under 35 U.S.C. 154(b)(4)(A).

Any questions concerning this decision should be directed to the Office of Patent Legal Administration at 571-272-7702.

United States Patent and Trademark Office

Commissioner for Patents
United States Patent and Trademark Office
P.O. Box 1450
Alexandria, VA 22313-1450
www.uspto.gov

19 MAR 2007

WesternGeco
10001 Richmond Avenue
Houston, TX 77042

| | | |
|---|---|---|
| In re Application of | : | |
| Goujon et al. | : | |
| Application No.: 10/529,186 | : | DECISION |
| PCT No.: PCT/EP03/50702 | : | |
| Int. Filing Date: 07 October 2003 | : | ON |
| Priority Date: 12 October 2002 | : | |
| Attorney Docket No.: 2088.001100/14.0210/PCT/US | : | PETITION |
| For: Multi-Part Seismic Cable | : | |

This is a decision on applicants' "Petition" filed on 25 January 2007.

## BACKGROUND

In a Decision mailed on 18 August 2006, the Form PCT/DO/EO/905 mailed on 30 August 2005 and the Forms PCT/DO/EO/909 mailed on 19 April 2006 and 15 June 2006 were **VACATED**.

On 30 August 2006, a Notification of Defective Response (Form PCT/DO/EO/916) was mailed to applicants, requiring the submission of an oath or declaration compliant with 37 CFR 1.497(a) and (b) and a surcharge under 37 CFR 1.492(h).

## DISCUSSION

Petitioner requests "that the Office vacate the Notification of Defective Response dated August 30, 2006, on the basis that the Applicants never received a Notification of Missing Requirements (Form PCT/DO/EO/905)." Petitioner notes that the Decision mailed on 18 August 2006 stated in part that

> This application was being forwarded to the United States Designated/Elected Office (DO/EO/US) for continued processing including the issuance of a Notification of Missing Requirements (Form PCT/DO/EO/905) indicating that an executed oath or declaration of the inventors is required.

Petitioner essentially argues that the USPTO erred in issuing a Notification of Defective Response (Form PCT/DO/EO/916) in place of the Notification of Missing Requirements (Form PCT/DO/EO/905) ordered by the Decision mailed on 18 August 2006. Review of the record reveals that in fact no Notification of Missing Requirements (Form PCT/DO/EO/905) was issued subsequent to the mailing of the Decision on 18 August 2006; instead, a Notification of Defective Response (Form PCT/DO/EO/916) was issued. Since the ordered Form PCT/DO/EO/905 was never issued nor responded to by applicants, the mailing of the Form PCT/DO/EO/916 on 30 August 2006 was improper. Therefore, the Form PCT/DO/EO/916 mailed on 30 August 2006 is hereby **VACATED**.

## DECISION

The petition is **GRANTED**, to the extent noted above.

This application was being forwarded to the United States Designated/Elected Office (DO/EO/US) for continued processing including the issuance of a Notification of Missing Requirements (Form PCT/DO/EO/905) requiring the submission of an an executed oath or declaration of the inventors and a surcharge under 37 CFR 1.492(h).

George Dombroske
PCT Legal Examiner
Office of PCT Legal Administration
Tel: (571) 272-3283
Fax: (571) 273-0459

UNITED STATES PATENT AND TRADEMARK OFFICE

Commissioner for Patents
United States Patent and Trademark Office
P.O.Box 1450
Alexandria, VA 22313-1450
www.uspto.gov

MAILED
FROM DIRECTOR'S OFFICE

DEC 18 2007

TECHNOLOGY CENTER 3600

WesternGeco
10001 Richmond Avenue
Houston TX 77042

| | | |
|---|---|---|
| In re Application of: | : | |
| Nicolas GOUJON et al. | : | DECISION ON REQUEST TO |
| Application No.: 10/529,186 | : | PARTICIPATE IN PATENT |
| Filed: May 1, 2007 | : | PROSECUTION HIGHWAY PILOT |
| Attorney Docket No.: | : | PROGRAM AND PETITION TO |
| 14.0210-PCT-US | : | MAKE SPECIAL UNDER 37 CFR |
| For: MULTI-PART | : | 1.102(d) |
| SEISMIC CABLE | : | |

This is a decision on the request to participate in the Patent Prosecution Highway (PPH) pilot program and the petition under 37 CFR 1.102(d), filed October 19, 2007, to make the above-identified application special.

The request and petition are **DISMISSED**.

A grantable request to participate in the PPH pilot program and petition to make special require:

(1) The U.S. application must validly claim priority under 35 U.S.C. 119(a) to one or more applications filed in a foreign country;
(2) Applicant must submit a copy of the allowable/patentable claim(s) from the foreign application(s);
(3) All the claims in the U.S. application must sufficiently correspond or be amended to sufficiently correspond to the allowable/patentable claim(s) in the foreign application(s);
(4) Examination of the U.S. application has not begun;
(5) Applicant must submit a copy of all the Office actions from each of the foreign application(s) containing the allowable/patentable claim(s);
(6) Applicant must submit an IDS listing the documents cited by the foreign examiner in the foreign Office action along with copies of documents except U.S. patents or U.S. patent application publications; and
(7) The required petition fee under 37 CFR 1.17(h).

The request to participate in the PPH pilot is not grantable as per item (2) above in that no copy of the allowable/patentable claims from the foreign application have been submitted. Since no copy of the claims has been provided, correspondence as per item (3) above cannot be determined.

Applicant is given a time period of **ONE MONTH or THIRTY DAYS**, whichever is longer, to correct the deficiencies. **NO EXTENSION OF TIME UNDER 37 CFR 1.136 IS PERMITTED.** If the deficiencies are not corrected with the time period given, the application will await action in its regular turn.

Response must be faxed to Robert Weinhardt at 571-273-8300. Telephone inquires concerning this decision should be directed to Robert Weinhardt at 571-272-6633. All other inquiries concerning the examination or status of the application should be directed to the Patent Application Information Retrieval (PAIR) system.

Robert Weinhardt
TC3600
Business Practice Specialist

## SPE RESPONSE FOR CERTIFICATE OF CORRECTION

Paper No.: _____

DATE : July 7, 2009

TO SPE OF : ART UNIT 3728
SUBJECT : Request for Certificate of Correction for Appl. No.: 10/529187 /7367141

Please respond to this request for a certificate of correction within 7 days.

**FOR IFW FILES:**

Please review the requested changes/corrections as shown in the **COCIN** document(s) in the IFW application image. No new matter should be introduced, nor should the scope or meaning of the claims be changed.

Please complete the response (see below) and forward the completed response to scanning using document code **COCX**.

**FOR PAPER FILES:**

Please review the requested changes/corrections as shown in the attached certificate of correction. Please complete this form (see below) and forward it with the file to:

**Certificates of Correction Branch (CofC)**
**South Tower - 9A22**
**Palm Location 7580**

Magdalene Talley
Certificates of Correction Branch
703-308-9390 ext. 120
571-270-9990

**Thank You For Your Assistance**

**The request for issuing the above-identified correction(s) is hereby:**
Note your decision on the appropriate box.

- [x] **Approved** — All changes apply.
- [ ] **Approved in Part** — Specify below which changes **do not** apply.
- [ ] **Denied** — State the reasons for denial below.

**Comments:** Tel K

Ted Kavanaugh
Primary Examiner

SPE

3728
Art Unit

PTOL-306 (REV. 7/03) U.S. DEPARTMENT OF COMMERCE Patent and Trademark Office

01 SEP 2005

UNITED STATES PATENT AND TRADEMARK OFFICE

Commissioner for Patents
United States Patent and Trademark Office
P.O. Box 1450
Alexandria, VA 22313-1450
www.uspto.gov

Seven L. Hunter
Julbright & Jaworski, L.L.P.
500 Congress Avenue, Suite 2400
Austin, TX 78701

| | |
|---|---|
| In re Application of<br>HASELTON, et al.<br>Application No.: 10/529,197<br>PCT No.: PCT/US03/30623<br>Int. Filing Date: 26 September 2003<br>Priority Date: 26 September 2002<br>Atty. Docket No.: VBLT:017US<br>For: METHOD FOR SCREENING MOLECULAR INTERACTIONS | DECISION ON PETITION<br><br>UNDER 37 CFR 1.137(b) |

The petition to revive under 37 CFR 1.137(b) filed 09 August 2005 in the above-captioned application is hereby **GRANTED** as follows:

Applicant's statement that "the entire delay in filing the required reply from the due date for the required reply until the filing of a grantable petition under 37 CFR 1.137(b) was unintentional" and the prompt filing of the petition satisfies the requirement of 37 CFR 1.137(b)(3).

A review of the application file reveals that applicant has now provided payment of the full, U.S. Basic National Fee. Therefore, the request to revive the application abandoned under 35 U.S.C. 371(d) is granted as to the National stage in the United States of America.

This application is being returned to the United States Designated/Elected Office (DO/EO/US) for the preparation and mailing of a "Notification of Missing Requirements" (Form PCT/DO/EO/905) informing applicant that an executed oath or declaration of the inventor and payment of the appropriate surcharge is required.

Derek A. Putonen
Attorney Advisor
Office of PCT Legal Administration
Tel: (571) 272-3294
Fax: (571) 273-0459

UNITED STATES PATENT AND TRADEMARK OFFICE

Commissioner for Patents
United States Patent and Trademark Office
P.O. Box 1450
Alexandria, VA 22313-1450
www.uspto.gov

NATH & ASSOCIATES
112 South West Street
Alexandria VA 22314

COPY MAILED
AUG 25 2008

In re Application of :
Kawano :
Application No. 10/529,204 : ON PETITION
Filed: March 25, 2005 :
Attorney Docket No. 26688U :
For: LIGHT-CURING INK FIXING DEVICE, FIXING METHOD, AND PRINTER

This is a decision on the petition under 37 CFR 1.137(b), filed June 4, 2008, to revive the above-identified application.

The petition under 37 CFR 1.137(b) is **GRANTED**.

This application became abandoned for failure to properly reply to the final Office action, mailed October 17, 2007, which set a three month period for reply. Applicant filed an amendment and a petition for a one month extension of time on February 19, 2008. The amendment failed to place this application in *prima facie* condition for allowance, as was explained in the March 13, 2008 Advisory action. This application became abandoned on February 18, 2008. A Notice of Abandonment was mailed on June 2, 2008.

The above-identified application is being revived solely for purposes of continuity. As continuity has been established by this decision reviving the above-identified application, the above-identified application is again abandoned in favor of divisional application No. 12/081,533, filed April 17, 2008.

After the mailing of this decision, this application will be returned to Files Repository.

Telephone inquiries concerning this decision should be directed to the undersigned at (571) 272-3230.

Shirene Willis Brantley
Senior Petitions Attorney
Office of Petitions

UNITED STATES PATENT AND TRADEMARK OFFICE

COMMISSIONER FOR PATENTS
UNITED STATES PATENT AND TRADEMARK OFFICE
P.O. BOX 1450
ALEXANDRIA, VA 22313-1450
www.uspto.gov

BUCHANAN, INGERSOLL & ROONEY PC
POST OFFICE BOX 1404
ALEXANDRIA VA 22313-1404

COPY MAILED

SEP 12 2007

OFFICE OF PETITIONS

Applicant: De Groot, Max
Appl. No.: 10/529,213
Filing Date: September 26, 2003
Title: IDENTIFICATION OF A TERMINAL TO A SERVER
Attorney Docket No.: 032326-296
Pub. No.: US 2006/0141987 A1
Pub. Date: June 29, 2006

This is a decision on the request for a corrected patent application publication under 37 CFR 1.221(b), received on August 22, 2006, for the above-identified application.

The instant request is that the application be republished because the patent application publication has an error in dependent claim 3.

The request is granted.

It would greatly benefit the Office if **applicant did not provide copies of papers**, which were previously submitted or **complete copies of the publication**, as it unnecessarily increases the cost to the Office. See 37 CFR 1.4(b). A request for corrected publication need only point out what was printed incorrectly in the application, where the error occurs in the publication and where the correct text or drawing is found in the application papers. Marked up relevant copies of the applications papers and the pre-grant publication may facilitate processing of the request, where it is not readily apparent where the error occurs. If it is not clear why the error is a material error, further explanation may be warranted.

Inquiries relating to this matter may be directed to Mark Polutta at (571) 272-7709.

Mark O. Polutta
Senior Legal Advisor
Office of Patent Legal Administration
Office of the Deputy Commissioner
for Patent Examination Policy

## SPE RESPONSE FOR CERTIFICATE OF CORRECTION

**Paper No.**:20091016

**DATE** : October 17, 2009

**TO SPE OF** : ART UNIT 1624

**SUBJECT** : Request for Certificate of Correction on Patent No.: 7,569,706

A response is requested with respect to the accompanying request for a certificate of correction.

Please complete this form and return with file, within **7** days to:
**Certificates of Correction Branch - PK 3-910**
Palm location **7590** - Tel. No. 305-8201

With respect to the change(s) requested, correcting Office and/or Applicant's errors, should the patent read as shown in the certificate of correction? No new matter should be introduced, nor should the scope or meaning of the claims be changed.

**Thank You For Your Assistance** **Certificates of Correction Branch**

**The request for issuing the above-identified correction(s) is hereby:**
Note your decision on the appropriate box.

☒ **Approved** All changes apply.

☐ **Approved in Part** Specify below which changes **do not** apply.

☐ **Denied** State the reasons for denial below.

**Comments:**

**SPE:** /James O. Wilson/ **Art Unit** 1624

## SPE RESPONSE FOR CERTIFICATE OF CORRECTION

**Paper No.**:20091016

**DATE** : November 9, 2009

**TO SPE OF** : ART UNIT 1624

**SUBJECT** : Request for Certificate of Correction on Patent No.: 7,569,706

A response is requested with respect to the accompanying request for a certificate of correction.

Please complete this form and return with file, within **7** days to:
**Certificates of Correction Branch - PK 3-910**
Palm location **7590** - Tel. No. 305-8201

With respect to the change(s) requested, correcting Office and/or Applicant's errors, should the patent read as shown in the certificate of correction? No new matter should be introduced, nor should the scope or meaning of the claims be changed.

**Thank You For Your Assistance** **Certificates of Correction Branch**

**The request for issuing the above-identified correction(s) is hereby:**
Note your decision on the appropriate box.

☒ **Approved** **All** changes apply.

☐ **Approved in Part** Specify below which changes **do not** apply.

☐ **Denied** State the reasons for denial below.

**Comments:**

**SPE:** /James O. Wilson/ **Art Unit** 1624

UNITED STATES PATENT AND TRADEMARK OFFICE

Commissioner for Patents
United States Patent and Trademark Office
P.O. Box 1450
Alexandria, VA 22313-1450
www.uspto.gov

**MAIL**

MAY 2 3 2006

DIRECTOR OFFICE
TECHNOLOGY CENTER 2600

FITZPATRICK CELLA HARPER & SCINTO
30 ROCKEFELLER PLAZA
NEW YORK NY 10112

In re Application of
AICHI, TAKAO, et al.
Application No. 10/529,217
Filed: March 25, 2005
For: **IMAGE SUPPLY DEVICE, RECORDING SYSTEM, AND RECORDING CONTROL METHOD**

DECISION ON PETITION TO MAKE SPECIAL

This is a decision on the petition filed May 3, 2006 under Manual of Patent Examination Procedure §708.02, VIII requesting accelerated examination.

The petition under Manual of Patent Examination Procedure §708.02, VIII, must:
(1) be filed prior to receiving any examination by the examiner,
(2) be accompanied by the required fee- $130,
(3) the claims should be directed to a single invention (if it is determined that the claims pertain to more than one invention, then applicant will have to make an election without traverse or forfeit accelerated examination status),
(4) state that a pre-examination search was made, and fully discuss the search method employed, such as classes and subclasses searched, publications, Chemical abstracts, patents, etc. A search made by a foreign patent office satisfies this requirement,
(5) be accompanied by a copy of each of the references most closely related to the subject matter encompassed by the claims if said references are not already of record,.
(6) fully discuss the references, pointing out with the particularity required by 37 C.F.R. §1.111 (b) and (c), how the claimed subject matter is patentable over the references.

The petitioner meets all the above-listed requirements. Accordingly, the petition is **GRANTED**.

The application will retain its special status throughout its entire prosecution, including any appeal to the Board of Patent Appeals and Interferences, subject only to diligent prosecution by the applicant. The application file is being forwarded to the examiner for appropriate action in due course.

Kenneth A. Wieder
Special Program Examiner
Technology Center 2600
Communications

UNITED STATES PATENT AND TRADEMARK OFFICE

Commissioner for Patents
United States Patent and Trademark Office
P.O. Box 1450
Alexandria, VA 22313-1450
www.uspto.gov

18 AUG 2006

STERNE, KESSLER, GOLDSTEIN & FOX PLLC
1100 NEW YORK AVENUE, N.W.
WASHINGTON DC 20005

| | | |
|---|---|---|
| In re Application of ROBERT et al. | : | |
| Application No.: 10/529,221 | : | |
| PCT No.: PCT/US03/30238 | : | DECISION ON |
| Int. Filing: 26 September 2003 | : | |
| Priority Date: 27 September 2002 | : | SUBMISSION |
| Attorney Docket No.: 1843.0200001/EKS/FRC | : | |
| For: TARGETED CD1D MOLECULES | : | |

This is in response to applicant's "Reply to Notification of Defective Response" filed on 30 June 2006 in the United States Patent and Trademark Office.

On 25 March 2005, applicant filed a transmittal letter concerning a submission under 35 U.S.C. 371 along with the basic national fee. On 18 July 2005, a Notification of Missing Requirements was mailed to applicant indicating that an oath or declaration, in compliance with 37 CFR 1.497(a) and (b) and the surcharge for filing the oath or declaration after the thirty month period was required.

On 08 September 2005, applicant submitted declarations, executed by some but not all of the inventors listed in the published international application. On 01 June 2006, a Notification of Defective Response was mailed to applicant indicating that a composite declaration was submitted and was improper. A properly executed declaration, in compliance with 37 CFR 1.497(a) and (b), was required.

On 30 June 2006, applicants filed the instant reply along with two 3 page declarations. Each declaration was complete and executed by the named inventors, meeting the requirements of 37 CFR 1.497(a) and (b). The declarations filed on 30 June 2006 are acceptable.

The application will be forwarded to the United States Designated/Elected Office for further processing in accord with this decision. The 35 U.S.C. 371(c)(1), (c)(2) and (c)(4) date is **30 June 2006.**

Cynthia M. Kratz

Cynthia M. Kratz
Attorney Advisor
PCT Legal Office
Office of PCT Legal Administration
Telephone: (571) 272-3286

UNITED STATES PATENT AND TRADEMARK OFFICE

UNITED STATES DEPARTMENT OF COMMERCE
United States Patent and Trademark Office
Address: COMMISSIONER FOR PATENTS
P.O. Box 1450
Alexandria, Virginia 22313-1450
www.uspto.gov

SAP / FINNEGAN, HENDERSON LLP
901 NEW YORK AVENUE, NW
WASHINGTON, DC 20001-4413

Mail Date: 04/26/2010

| | | |
|---|---|---|
| **Applicant** | : Peter Von Zimmermann | : DECISION ON REQUEST FOR |
| **Patent Number** | : 7640195 | : RECALCULATION of PATENT |
| **Issue Date** | : 12/29/2009 | : TERM ADJUSTMENT IN VIEW |
| **Appliction No** | : 10/529,231 | : OF WYETH AND NOTICE OF INTENT TO |
| **Filed** | : 01/31/2006 | : ISSUE CERTIFICATE OF CORRECTION |
| | | : |

The Request for Recalculation is **GRANTED** to the extent indicated.

The patent term adjustment has been determined to be **0** days. The USPTO will *sua sponte* issue a certificate of correction reflecting the amount of PTA days determined by the recalculation.

Prior to the issuance of the certificate of correction, the USPTO will afford patentee an opportunity to be heard and request reconsideration. Accordingly, patentee has **one month or thirty (30) days**, whichever is longer, to file a request for reconsideration of this patent term adjustment calculation. See 35 U.S.C. 154(b)(3)(B)(ii) and 37 CFR 1.322(a)(4). No extensions of time will be granted under 37 CFR 1.136.

Patentee should use document code PET.OP if electronically filing a request for reconsideration of this patent term adjustment calculation. The patentee must also include the information required by 37 CFR 1.705(b)(2) and the fee required by 37 CFR 1.18(e). If patentee does not file a timely request for reconsideration of this patent term adjustment calculation including the information required by 37 CFR 1.705(b)(2) and the fee required by 37 CFR 1.18(e), the USPTO will issue a certificate of correction reflecting the PTA determination noted above.

Patentee should be aware that in order to preserve the right to review in the United States District Court for the District of Columbia of the USPTO patent term adjustment determination, patentee must ensure that he or she also take the steps required under 35 U.S.C. 154(b)(4)(A) in a timely manner. Nothing in the request for recalculation should be construed as providing an alternative time frame for commencing a civil action under 35 U.S.C. 154(b)(4)(A).

Any questions concerning this decision should be directed to the Office of Patent Legal Administration at 571-272-7702.

UNITED STATES PATENT AND TRADEMARK OFFICE

Commissioner for Patents
United States Patent and Trademark Office
P.O. Box 1450
Alexandria, VA 22313-1450
www.uspto.gov

**EDWARDS ANGELL PALMER & DODGE LLP**
**P.O. BOX 55874**
**BOSTON MA 02205**

COPY MAILED

MAR 0 3 2008

OFFICE OF PETITIONS

| | | |
|---|---|---|
| In re Application of | : | |
| Kaoru Higuchi et al | : | |
| Application No. 10/529,244 | : | DECISION DISMISSING PETITION |
| Filed: March 24, 2005 | : | UNDER 37 CFR 1.313(a) |
| Attorney Docket No. 63,131 (70904) | : | |

This is a decision on the petition filed February 29, 2008 which is being treated under 37 CFR 1.313(a), requesting withdrawal of the above-identified application from issue.

The petition is **dismissed** as moot for the reasons stated below.

A review of the file record discloses that a Notice of Allowance and Fee(s) Due was mailed on December 3, 2007, with the issue fee being due on or before March 3, 2008. The petition states that the issue fee in this case has not been paid.

The filing of a petition under 37 CFR 1.313(a) is unnecessary, since the mere filing of an RCE and submission will effectively withdraw an application from issue prior to payment of the issue fee. In view thereof, the petition to withdraw from issue is dismissed as involving a moot issue. *Note* MPEP §§ 706.07(h)(IX) and 1308.

Inquiries concerning this decision may be directed to the undersigned at (571) 272-3208.

The matter is being referred to Technology Center AU 2861 for appropriate processing of the RCE filed February 29, 2008, and for consideration of the concurrently filed IDS.

Karen Creasy
Petitions Examiner
Office of Petitions

# UNITED STATES PATENT AND TRADEMARK OFFICE

UNITED STATES DEPARTMENT OF COMMERCE
United States Patent and Trademark Office
Address: COMMISSIONER FOR PATENTS
P.O. Box 1450
Alexandria, Virginia 22313-1450
www.uspto.gov

| APPLICATION NO. | FILING DATE | FIRST NAMED INVENTOR | ATTORNEY DOCKET NO. | CONFIRMATION NO. |
|---|---|---|---|---|
| 10/529,249 | 09/01/2005 | Abbas Razavi | F-861 (31223.00078) | 4021 |

25264 7590 06/10/2009
FINA TECHNOLOGY INC
PO BOX 674412
HOUSTON, TX 77267-4412

| EXAMINER |
|---|
| LEE, RIP A |

| ART UNIT | PAPER NUMBER |
|---|---|
| 1796 | |

| MAIL DATE | DELIVERY MODE |
|---|---|
| 06/10/2009 | PAPER |

**Please find below and/or attached an Office communication concerning this application or proceeding.**

The time period for reply, if any, is set in the attached communication.

UNITED STATES PATENT AND TRADEMARK OFFICE

Commissioner for Patents
United States Patent and Trademark Office
P.O. Box 1450
Alexandria, VA 22313-1450
www.uspto.gov

wk

Mailed: JUN 10 2009

| | | |
|---|---|---|
| In re application of | : | |
| Abbas Razavi | : | DECISION ON |
| Serial No. 10/529,249 | : | PETITION |
| Filed: 09/01/2005 | : | |
| For: Dual Site Catalyst System Comprising A Hafnocene Component For The Production Of Bimodal Polyolefins In A Single Reactor | : | |

This is a decision on a PETITION filed February 26, 2009 for correction of an error made when correcting an error made when electronically filing a Request for Continued Examination (RCE) Transmittal. Applicant requests that the incorrect documents be removed from the application.

**DECISION**

The petition is **GRANTED.**

Section 1.59 has been amended to eliminate references to returning documents that have been expunged to recognize that, with electronic Official files, there will be nothing to return when a paper is expunged.

The Office is capturing electronic images of all documents that form the Official file. Where the image is generated from a physical source document, the originating document may be disposed of once the electronic image accuracy is verified. The paper source document will eventually be destroyed under a United States National Archives and Records Administration (NARA) approved schedule. Therefore, if a document is to be expunged from the record, the only operation that will be required will be removal of the image from the Official file.

Paragraph (a)(1) of §1.59 has been amended by deleting the phrase "and returned" from the first sentence, and deleting the second sentence. Paragraph (b) of §1.59 has been amended by deleting the phrase "and return" from each of the first and second sentences. The Office will continue to provide notice in the Official file that a paper has been expunged and the Office will send a decision to the applicant notifying the applicant that the paper has been expunged.

10/529,249

The images will be removed from the Official file.

/Gregory L Mills/
Gregory L. Mills, Acting Director
Technology Center 1700
Chemical and Materials Engineering

Diane L. Kilpatrick-Lee
FINA Technology, Inc.
P.O.Box 674412
Houston, Texas 77267-4412

UNITED STATES PATENT AND TRADEMARK OFFICE

Commissioner for Patents
United States Patent and Trademark Office
P.O. Box 1450
Alexandria, VA 22313-1450
www.uspto.gov

Patent No. : 7,227,190 B2
Serial No. : 10/529,254
Inventor(s) : Yasukawa et al.
Issued : June 5, 2007
Title : **WHITE LIGHT EMITTING DEVICE**
Docket No. : **PTGF-03064US**
Re: Request for Reconsideration

Consideration has been given your request for the issuance of a certificate of correction for the above-identified patent under the provisions of 37 CFR 1.322 and/or 1.323.

A petition under 37 CFR 3.81 must be filed and granted to fulfill your request, to date, there is no petition on record to consider your request.

Furthermore, Assignees' and/ or Co-assignees' names and addresses (assignment data) printed in a patent are based *solely* on information supplied in the appropriate space for identifying the assignment data, i.e., item 3 of the Fee(s) Transmittal Form PTOL-85B. After payment of the issue fee, correction of assignment data submitted on the PTOL-85B can only be done by Certificate of Correction under 37 CFR 1.323, which requires petition under 37 CFR 3.81(b).

A request for a patent to be corrected to state the name of the assignee must:

A. state that the assignment was submitted for recordation as set forth in 37 CFR 3.11 before issuance of the patent;
B. include a request for a certificate of correction under 37 CFR 1.323 along with the fee set forth in 37 CFR 1.20(a); and
C. include the processing fee set forth in 37 CFR 1.17(i).

If the request is granted, Certificates of Correction Branch will be notified that a Certificate of Correction may be issued.
See Manual of Patent Examining Procedure, Section 1481.01 (Rev. 3) (Oct. 2005).

*Applicant has not included items B and or C above, accordingly, the request for Certificate of Correction to add or change the assignee data is dismissed.*
Any request under 37 CFR 3.81(b) should be directed to the following address or facsimile number:

By mail: Mail Stop PETITIONS
Commissioner for Patents
Post Office Box 1450
Alexandria, VA 22313-1450

By hand: Customer Service Window
Mail Stop Petitions
Randolph Building
401 Dulany Street
Alexandria, VA 22314

By fax: 571-273-8300 ATTN: Office of Petitions

If, the petition under 37 CFR 1.182 (required fee currently $130), is filed and granted, the patentee would be entitled to a certificate of correction under 37 CFR 1.323 (required fee currently $100), which has been received.

**Ernest C. White, *LIE***
For Mary F. Diggs (703) 308-9390 x 125
Decisions & Certificates
of Correction Branch
(703) **308-9390 x 122**

MCGINN INTELLECTUAL PROPERTY LAW GROUP, PLLC
8321 OLD COURTHOUSE ROAD
SUITE 200
VIENNA VA 22182-3817

ecw

UNITED STATES PATENT AND TRADEMARK OFFICE

Commissioner for Patents
United States Patent and Trademark Office
P.O. Box 1450
Alexandria, VA 22313-1450
www.uspto.gov

**MCGINN INTELLECTUAL PROPERTY LAW GROUP, PLLC**
**8321 OLD COURTHOUSE ROAD**
**SUITE 200**
**VIENNA VA 22182-3817**

COPY MAILED

NOV 03 2009

OFFICE OF PETITIONS

| | | |
|---|---|---|
| In re Patent No. 7,227,190 | : | |
| Issue Date: June 5, 2007 | : | |
| Application No. 10/529,254 | : | ON PETITION |
| Filed: March 25, 2005 | : | |
| Attorney Docket No. PTGF-03064US | : | |

This is a decision on the petition filed December 16, 2008 and resubmitted October 15, 2009, which is being treated as a request under 37 CFR 3.81(b)[1] to correct the name of the assignee on the front page of the above-identified patent by way of a Certificate of Correction.

The request is **GRANTED**.

Telephone inquiries concerning this decision may be directed to Terri Johnson at (571) 272-2991. Inquiries regarding the issuance of a certificate of correction should be directed to the Certificate of Correction Branch at (571) 272-4200.

The Certificates of Correction Branch will be notified of this decision granting the petition under 37 CFR 3.81(b) and directing issuance of the requested Certificate of Correction.

Chris Bottorff
Petitions Examiner
Office of Petitions

[1] *See* MPEP 1309, subsection II; and Official Gazette of June 22, 2004.

UNITED STATES PATENT AND TRADEMARK OFFICE

Commissioner for Patents
United States Patent and Trademark Office
P.O. Box 1450
Alexandria, VA 22313-1450
www.uspto.gov

**FISH & RICHARDSON P.C.**
**P.O. BOX 1022**
**MINNEAPOLIS MN 55440-1022**

**COPY MAILED**

SEP 30 2008

**OFFICE OF PETITIONS**

ON PETITION

In re Patent No. 7,103,508 :
Application No. 10/529,263 :
Filed: March 25, 2005 :
Issued: September 5, 2006 :
Attorney Docket No. 13460-003US1 :

This is a decision on the petition filed August 21, 2008, which is being treated as a request under 37 CFR 3.81(b)[1] to add the name of the second assignee on the front page of the above-identified patent by way of a Certificate of Correction.

The request is **GRANTED**.

In addition to the $130.00 processing fee required by 37 CFR 3.81(b), the $100.00 Certificate of Correction fee will also be charged to petitioner's deposit account as authorized.

The patent file is being forwarded to the Certificates of Correction Branch for issuance of the requested Certificate of Correction.

Telephone inquiries concerning this decision may be directed to the undersigned at (571) 272-3206. Inquiries regarding the issuance of a certificate of correction should be directed to the Certificate of Correction Branch at (571) 272-4200.

Liana Walsh
Petitions Examiner
Office of Petitions

[1] *See* MPEP 1309, subsection II; and Official Gazette of June 22, 2004.

26 JUL 2005

#3

UNITED STATES PATENT AND TRADEMARK OFFICE

COMMISSIONER FOR PATENTS
UNITED STATES PATENT AND TRADEMARK OFFICE
P.O. BOX 1450
ALEXANDRIA, VA 22313-1450
WWW.USPTO.GOV

Gary P Oakeson
Thorpe North & Western
P O Box 1219
Sandy UT 84091

| | |
|---|---|
| In re Application of<br>DAFTARY et al.<br>Application No.: 10/529,273<br>PCT No.: PCT/IN03/00298<br>Int. Filing: 04 September 2003<br>Priority Date: 05 September 2002<br>Attorney Docket No.: 24439 US<br>For: LIQUID STABLE COMPOSITION OF OXAZAPHOSPHORINE WITH MESNA | DECISION ON<br>PETITION UNDER<br>37 CFR 1.137(b) |

The petition to revive under 37 CFR 1.137(b) filed 25 March 2005 in the above-captioned application is hereby **GRANTED** as follows:

Applicant's statement that the "entire delay in filing the required reply from the due date for the required reply until the filing of a grantable petition under 37 CFR 1.137(b) was unintentional" meets the requirements of 37 CFR 1.137(b)(3).

A review of the application file reveals that the basic national fee of $150 has been provided. The required petition fee of $750 was also paid. Thus, the requirements of 37 CFR 1.137(b) have been satisfied. Therefore, the request to revive the application abandoned under 35 U.S.C. 371(d) is granted as to the National stage in the United States of America.

This application is being forwarded to the United States Designated/Elected Office for further processing. The 35 U.S.C. 371 (c)(1), (c)(2) and (c)(4) date is 25 March 2005.

Cynthia M. Kratz

Cynthia M. Kratz
Attorney Advisor
Office of PCT Legal Administration

Telephone: 571-272-3286
Facsimile: 571-273-0459

29 NOV 2005

United States Patent and Trademark Office

#5

Commissioner for Patents
United States Patent and Trademark Office
P.O. Box 1450
Alexandria, VA 22313-1450
www.uspto.gov

Wegman, Hessler & Vanderburg
6055 Rockside Woods Blvd., Suite 200
Cleveland, OH 44131

| | | |
|---|---|---|
| In re Application of | : | |
| Yamamoto | : | |
| Application No.: 10/529,286 | : | DECISION |
| PCT No.: PCT/US03/23862 | : | |
| Int. Filing Date: 30 July 2003 | : | ON |
| Priority Date: 27 September 2002 | : | |
| Attorney Docket No.: 020357 091P2 | : | PETITION |
| For: Improved Clip House Structure For | : | |
| Mounting Of Automotive Trim Parts | : | |

The petition to revive under 37 CFR 1.137(b) filed 07 November 2005 in the above-captioned application is hereby **GRANTED** as follows:

Applicant states that "the entire delay in filing the required reply from the due date for the required reply until the filing of a grantable petition pursuant to 37 CFR 1.137(b) was unintentional." This statement is being accepted in satisfaction of 37 CFR 1.137(b)(3).

A review of the application file reveals that the required petition fee of $1500.00 has been paid. The $300.00 basic national fee has also been paid. Thus, the requirements of 37 CFR 1.137(b) have been satisfied. Therefore, the request to revive the application abandoned under 35 U.S.C. 371(d) is granted as to the National stage in the United States of America.

This application is being forwarded to the United States Designated/Elected Office for further processing, including the preparation and mailing of a Notification of Missing Requirements (Form PCT/DO/EO/905) requiring the payment of the surcharge under 37 CFR 1.492(h) and the submission of an oath or declaration compliant with 37 CFR 1.497(a) and (b).

Richard Cole
PCT Legal Examiner
PCT Legal Office

George M. Dombroske
PCT Legal Examiner
PCT Legal Office
Tel: (571) 272-3283
Fax: (571) 273-0459

UNITED STATES PATENT AND TRADEMARK OFFICE

COMMISSIONER FOR PATENTS
UNITED STATES PATENT AND TRADEMARK OFFICE
P.O. BOX 1450
ALEXANDRIA, VA 22313-1450
www.uspto.gov

HAMRE, SCHUMANN, MUELLER & LARSON, P.C.
P.O. BOX 2902
MINNEAPOLIS, MN 55402-0902

**COPY MAILED**

AUG 27 2008

**OFFICE OF PETITIONS**

| | | |
|---|---|---|
| In re Application of | : | |
| Hideki Kitaura, et al. | : | |
| Application No.: 10/529,298 | : | ON PETITION |
| Filed: March 25, 2005 | : | |
| Attorney Docket No.: 10873.1639USWO | : | |

This is a decision on the petition, filed August 26, 2008, under 37 CFR 1.313(c)(2) to withdraw the above-identified application from issue after payment of the issue fee.

The petition is **GRANTED**.

The above-identified application is withdrawn from issue for consideration of a submission under 37 CFR 1.114 (request for continued examination). See 37 CFR 1.313(c)(2).

***Petitioner is advised that the issue fee paid on July 25, 2008, cannot be refunded. If, however, this application is again allowed, petitioner may request that it be applied towards the issue fee required by the new Notice of Allowance.***[1]

Telephone inquiries relating to this decision should be directed to the undersigned at (571) 272-3204.

The application is being referred to Technology Center AU 1794 for further processing of the request for continued examination under 37 CFR 1.114.

Sherry D. Brinkley
Petitions Examiner
Office of Petitions

[1] *The request to apply the issue fee to the new Notice may be satisfied by completing and returning the new Part B - Fee(s) Transmittal Form (along with any balance due at the time of submission). Petitioner is advised that the Issue Fee Transmittal Form must be completed and timely submitted to avoid abandonment of the application.*

UNITED STATES PATENT AND TRADEMARK OFFICE

UNITED STATES DEPARTMENT OF COMMERCE
United States Patent and Trademark Office
Address: COMMISSIONER FOR PATENTS
P.O. Box 1450
Alexandria, Virginia 22313-1450
www.uspto.gov

HARNESS, DICKEY & PIERCE, P.L.C.
P.O. BOX 828
BLOOMFIELD HILLS, MI 48303

Mail Date: 04/21/2010

| | | |
|---|---|---|
| **Applicant** | : Takeo Azuma | : DECISION ON REQUEST FOR |
| **Patent Number** | : 7660443 | : RECALCULATION of PATENT |
| **Issue Date** | : 02/09/2010 | : TERM ADJUSTMENT IN VIEW |
| **Appliction No** | : 10/529,316 | : OF WYETH AND NOTICE OF INTENT TO |
| **Filed** | : 03/25/2005 | : ISSUE CERTIFICATE OF CORRECTION |
| | | : |

The Request for Recalculation is **GRANTED** to the extent indicated.

The patent term adjustment has been determined to be **659** days. The USPTO will *sua sponte* issue a certificate of correction reflecting the amount of PTA days determined by the recalculation.

Prior to the issuance of the certificate of correction, the USPTO will afford patentee an opportunity to be heard and request reconsideration. Accordingly, patentee has **one month or thirty (30) days**, whichever is longer, to file a request for reconsideration of this patent term adjustment calculation. See 35 U.S.C. 154(b)(3)(B)(ii) and 37 CFR 1.322(a)(4). No extensions of time will be granted under 37 CFR 1.136.

Patentee should use document code PET.OP if electronically filing a request for reconsideration of this patent term adjustment calculation. The patentee must also include the information required by 37 CFR 1.705(b)(2) and the fee required by 37 CFR 1.18(e). If patentee does not file a timely request for reconsideration of this patent term adjustment calculation including the information required by 37 CFR 1.705(b)(2) and the fee required by 37 CFR 1.18(e), the USPTO will issue a certificate of correction reflecting the PTA determination noted above.

Patentee should be aware that in order to preserve the right to review in the United States District Court for the District of Columbia of the USPTO patent term adjustment determination, patentee must ensure that he or she also take the steps required under 35 U.S.C. 154(b)(4)(A) in a timely manner. Nothing in the request for recalculation should be construed as providing an alternative time frame for commencing a civil action under 35 U.S.C. 154(b)(4)(A).

Any questions concerning this decision should be directed to the Office of Patent Legal Administration at 571-272-7702.

UNITED STATES PATENT AND TRADEMARK OFFICE

Commissioner for Patents
United States Patent and Trademark Office
P.O. Box 1450
Alexandria, VA 22313-1450
www.uspto.gov

OLIFF & BERRIDGE, PLC
P.O. BOX 19928
ALEXANDRIA VA 22320

**COPY MAILED**

SEP 29 2006

**OFFICE OF PETITIONS**

| | | |
|---|---|---|
| In re Application of | : | |
| Michel Drancourt et al. | : | |
| Application No. 10/529,319 | : | DECISION ON PETITION |
| Filed: February 17, 2006 | : | TO WITHDRAW |
| Attorney Docket No. 123296 | : | FROM RECORD |
| | : | |

This is a decision on the Request to Withdraw as attorney or agent under 37 C.F.R. § 1.36(b) or 37 C.F.R. § 10.40 filed July 11, 2006.

The request is **APPROVED**.

A review of the file record indicates that Melanie L. McCollum: (1) does not have power of attorney in this patent application; and (2) has been employed or otherwise engaged in the proceedings in this patent application. In view of the present decision, Melanie L. McCollum has been withdrawn from the present application and may not prepare or submit papers under 37 C.F.R. § 1.34, or correspond in any manner in this application unless appointed in an acceptable power of attorney under 37 C.F.R. § 1.32(b).

The request was signed by Melanie L. McCollum attorney/agent of record on behalf of herself.

Melanie L. McCollum has been withdrawn as attorney or agent of record; all other attorneys remain of record.

All future communications from the Office will continue to be directed to the above-listed address until otherwise properly notified by the applicant.

Telephone inquiries concerning this decision should be directed to Charles Smoot at 571-272-3299.

David Bucci
Petitions Examiner
Office of Petitions

19 APR 2006

UNITED STATES PATENT AND TRADEMARK OFFICE

Commissioner for Patents
United States Patent and Trademark Office
P.O. Box 1450
Alexandria, VA 22313-1450
www.uspto.gov

23548
LEYDIG VOIT & MAYER, LTD.
700 Thirteenth Street, NW
Suite 300
Washington, DC 20005-3960

| | | |
|---|---|---|
| In re Application of | : | |
| KRAMER, Karl-Heinz | : | |
| U.S. Application No.: 10/529,325 | : | |
| PCT No.: PCT/CH03/00651 | : | **DECISION** |
| Int. Filing Date: 30 September 2003 | : | |
| Priority Date: 04 October 2002 | : | |
| Attorney Docket No.: 403349 | : | |
| For: FERRITIC STEEL ALLOY | : | |

Applicant's "Request for Corrected Filing Receipt and PCT/903 Form" filed via facsimile on 31 March 2006 is treated as a petition under 37 CFR 1.181 and hereby **GRANTED** as follows:

The Notice of Acceptance of Application Under 35 U.S.C. 371 and 37 CFR 1.495 (Form PCT/DO/EO/903) and filing receipt mailed 19 December 2003 in the above-captioned application recorded the international filing date of PCT/CH03/00651 as 30 March 2003.

However, a review of the application and international publication shows that this date is incorrect. The international filing date is 30 September 2003.

Accordingly, the Form PCT/DO/EO/903 and filing receipt mailed 21 March 2006 contain erroneous information and are both **VACATED**.

This application is being forwarded to the national stage division for further processing in accordance with this decision.

James Thomson
Attorney Advisor
Office of PCT Legal Administration

Tel.: (571) 272-3302

UNITED STATES PATENT AND TRADEMARK OFFICE

COMMISSIONER FOR PATENTS
UNITED STATES PATENT AND TRADEMARK OFFICE
P.O. BOX 1450
ALEXANDRIA, VA 22313-1450
www.uspto.gov

CANTOR COLBURN, LLP
20 CHURCH STREET
22ND FLOOR
HARTFORD, CT 06103

COPY MAILED

JUL 01 2008

OFFICE OF PETITIONS

| | | |
|---|---|---|
| In re Application of | : | |
| Yasuo Nishi, et al. | : | |
| Application No.: 10/529,332 | : | ON PETITION |
| Filed: March 24, 2005 | : | |
| Attorney Docket No.: KOY-0048 | : | |

This is a decision on the petition, filed June 30, 2008, under 37 CFR 1.313(c)(2) to withdraw the above-identified application from issue after payment of the issue fee.

The petition is **GRANTED**.

The above-identified application is withdrawn from issue for consideration of a submission under 37 CFR 1.114 (request for continued examination). See 37 CFR 1.313(c)(2).

***Petitioner is advised that the issue fee paid on May 8, 2008, cannot be refunded. If, however, this application is again allowed, petitioner may request that it be applied towards the issue fee required by the new Notice of Allowance.***[1]

Telephone inquiries relating to this decision should be directed to the undersigned at (571) 272-3204.

The application is being referred to Technology Center AU 1795 for further processing of the request for continued examination under 37 CFR 1.114 and for consideration of the concurrently filed Information Disclosure Statement (IDS).

Sherry D. Brinkley
Petitions Examiner
Office of Petitions

[1] *The request to apply the issue fee to the new Notice may be satisfied by completing and returning the new Part B - Fee(s) Transmittal Form (along with any balance due at the time of submission). Petitioner is advised that the Issue Fee Transmittal Form must be completed and timely submitted to avoid abandonment of the application.*

UNITED STATES PATENT AND TRADEMARK OFFICE

Commissioner for Patents
United States Patent and Trademark Office
P.O. Box 1450
Alexandria, VA 22313-1450
www.uspto.gov

CANTOR COLBURN, LLP
20 Church Street
22nd Floor
Hartford, CT 06103

MAILED

OCT 02 2009

OFFICE OF PETITIONS

ON PETITION

| | | |
|---|---|---|
| In re Patent No. 7,449,283 | : | |
| Issue Date: November 11, 2008 | : | |
| Application No. 10/529,332 | : | |
| Filed: March 24, 2005 | : | |
| Attorney Docket No. KOY-0048 | : | |

This is a decision on the petition filed March 27, 2009, which is being treated as a request under 37 CFR 3.81(b)[1] to correct the name of the assignee and address on the front page of the above-identified patent by way of a Certificate of Correction.

The request is **GRANTED**.

Telephone inquiries concerning this decision may be directed to the undersigned at (571) 272-0602. Inquiries regarding the issuance of a certificate of correction should be directed to the Certificate of Correction Branch at (571) 272-4200.

The Certificates of Correction Branch will be notified of this decision granting the petition under 37 CFR 3.81(b) and directing issuance of the requested Certificate of Correction.

Thurman K. Page
Petitions Examiner
Office of Petitions

[1] *See* MPEP 1309, subsection II; and Official Gazette of June 22, 2004.

28 MAR 2006

#4

UNITED STATES PATENT and TRADEMARK OFFICE

COMMISSIONER FOR PATENTS
UNITED STATES PATENT AND TRADEMARK OFFICE
P.O BOX 1450
ALEXANDRIA, VA 22313-1450
www.uspto.gov

Mark T. Kresnak, Ph. D.
GENENTECH, INC.
1 DNA Way
South San Fransico, CA 94080-4990

| | | |
|---|---|---|
| In re Application of | : | |
| Wu et al | : | DECISION ON |
| Application No.: 10/529,351 | : | |
| PCT Application No.: PCT/US2003/28547 | : | |
| Int. Filing Date: 29 September 2003 | : | PETITION UNDER |
| Priority Date: 02 October 2002 | : | |
| Attorney's Docket No.: P5101R1 | : | |
| For: Compositions and Methods for the Diagnosis | : | 37 CFR 1.48(b) |
| And Treatment of Tumor | : | |

This response is to the "PETITION UNDER 37 CFR 1.48(b)" submitted on 06 February 2006.

## BACKGROUND

On 29 September 2003, applicants filed international application No. PCT/US03/28547 designating the United States and claiming a priority date of 02 October 2002. Accordingly, the deadline for entry into the national stage by paying the basic national fee in the U.S. expired as of midnight of 04 April 2005.

On 25 March 2005, petitioner filed in the United States Patent & Trademark Office a transmittal letter for entry into the national stage in the U.S. under 35 U.SC. 371, which was accompanied by, inter alia, the U.S. basic national fee. No executed oath or declaration accompanied the above papers.

On 08 September 2005, the United States Designated/Elected Office (DO/EO/US) mailed a "NOTIFICATION OF MISSING REQUIREMENTS UNDER 35 U.S.C. 371 IN THE UNITED STATES DESIGNATED/ELECTED OFFICE (DO/EO/US)" (Form PCT/DO/EO/905) which informed applicant, inter alia, that an "Oath or Declaration of the inventors, in compliance with 37 CFR 1.497(a), and (b), identifying the application by International application number and international filing date." The notice indicated that all of the items set forth must be submitted within two (2) months from the date of this Notice or by 32 months from the priority date for the application, whichever is later. Failure to properly respond will result in abandonment.

On 06 February 2006, applicant filed, inter alia, and executed declaration, and a petition under 37 CFR 1.48(b) because due to the cancellation of certain claims, the contributions of inventor Yan Zhou is no longer being claimed as co-inventor in the aforementioned application.

## DISCUSSION

A submission under 37 CFR 1.48(b) (nonprovisional application- fewer inventors due to amendment or cancellation of claims) must include:

(1) a request signed by a party set forth in §1.33(b) to correct the inventorship that identifies the named inventor or inventors being deleted and acknowledges that the inventor's invention is no longer being claimed in the nonprovisional application; and

(2) the processing fee set forth in § 1.17(i).

A review of the application file suggests that at the time of filing the international application Yan Zhou was correctly listed as a joint inventor of the invention. The submission under 37 CFR 1.48(b) is due to the deletion of certain claims attributed to the inventor. Specifically, the preliminary amendment submitted on 06 February 2006 cancelled claims 1-14 at entering the national stage. Under this situation, applicants are still required to file an oath or declaration with the signatures of all the inventors that are listed in the international application in order to enter the national stage. In this instance, Yan Zhou has not been listed in the declaration so the declaration has not been properly executed. Thus the requirements under 35 USC 371 have not been satisfied.

Accordingly, after the requirements under 35 USC 371 are satisfied, applicants may petition to the patent examiner under 37 CFR1.48(b) to correct inventorship as a consequence of claim amendments.

## CONCLUSION

For the reasons above, the request under 37 CFR 1.48(b) is held in **ABEYANCE** until the requirements under 35 USC 371 are met.

If reconsideration on the merits of this petition is desired, a proper reply is an executed oath or declaration with the signatures of all the inventors that are listed in the international application must be filed within TWO (2) MONTHS from the mail date of this decision. The failure to provide the proper reply will result in Abandonment of the application. Extensions of time may be obtained under 37 CFR 1.136(a).

Any further correspondence with respect to this matter should be addressed to the Mail Stop PCT, Commissioner for Patents, Office of PCT Legal Administration, P.O. Box 1450, Alexandria, Virginia 22313-1450, with the contents of the letter marked to the attention of the Office of PCT Legal Administration.

Rafael Bacares
PCT Legal Examiner
PCT Legal Office
Telephone: (571) 272-3276
Facsimile: (571) 273-0459

UNITED STATES PATENT AND TRADEMARK OFFICE

Commissioner for Patents
United States Patent and Trademark Office
P.O. Box 1450
Alexandria, VA 22313-1450
www.uspto.gov

CROWELL & MORING LLP
INTELLECTUAL PROPERTY GROUP
P.O. BOX 14300
WASHINGTON, DC 20044-4300

**COPY MAILED**

FEB 15 2008

**OFFICE OF PETITIONS**

In re Application of :
Takashi Nomura :
Application No. 10/529,365 : ON PETITION
Filed: March 28, 2005 :
Attorney Docket No. 029267.56084US

This is a decision on the petition, filed February 14, 2008 under 37 CFR 1.313(c)(2) to withdraw the above-identified application from issue after payment of the issue fee.

The petition is **GRANTED**.

The above-identified application is withdrawn from issue for consideration of a submission under 37 CFR 1.114 (request for continued examination). See 37 CFR 1.313(c)(2).

**Petitioner is advised that the issue fee paid on January 8, 2008 in the above-identified application cannot be refunded. If, however, the above-identified application is again allowed, petitioner may request that it be applied towards the issue fee required by the new Notice of Allowance.**[1]

Telephone inquiries should be directed to Irvin Dingle at (571) 272-3210.

This matter is being referred to Technology Center AU 3661 for processing of the request for continued examination under 37 CFR 1.114 and for consideration of the concurrently filed Information Disclosure Statement.

Irvin Dingle
Petitions Examiner
Office of Petitions

---

[1] The request to apply the issue fee to the new Notice may be satisfied by completing and returning the new Issue Fee Transmittal Form PTOL-85(b), which includes the following language thereon: Commissioner for Patents is requested to apply the Issue Fee and Publication Fee (if any) or re-apply any previously paid issue fee to the application identified above. Petitioner is advised that, whether a fee is indicated as being due or not, the Issue Fee Transmittal Form **must** be completed and timely submitted to avoid abandonment. Note the language in bold text on the first page of the Notice of Allowance and Fee(s) Due (PTOL-85).

UNITED STATES PATENT AND TRADEMARK OFFICE

Commissioner for Patents
United States Patent and Trademark Office
P.O. Box 1450
Alexandria, VA 22313-1450
www.uspto.gov

ANTONELLI, TERRY, STOUT & KRAUS, LLP
1300 NORTH SEVENTEENTH STREET
SUITE 1800
ARLINGTON, VA 22209-3873

**MAILED**

JUN 0 1 2009

OFFICE OF PETITIONS

| | | |
|---|---|---|
| In re Application of | : | |
| Hiroshi Matsutani, et al. | : | |
| Application No.: 10/529,369 | : | ON PETITION |
| Filed: October 5, 2005 | : | |
| Attorney Docket No.: 1303.44954X00 | : | |

This is a decision on the petition, filed May 29, 2009, under 37 CFR 1.313(c)(2) to withdraw the above-identified application from issue after payment of the issue fee.

The petition is **GRANTED**.

The above-identified application is withdrawn from issue for consideration of a submission under 37 CFR 1.114 (request for continued examination). See 37 CFR 1.313(c)(2).

***Petitioner is advised that the issue fee paid on April 28, 2009, cannot be refunded. If, however, this application is again allowed, petitioner may request that it be applied towards the issue fee required by the new Notice of Allowance.***[1]

Telephone inquiries relating to this decision should be directed to the undersigned at (571) 272-3204.

The application is being referred to Technology Center AU 1796 for further processing of the request for continued examination under 37 CFR 1.114 and for consideration of the concurrently filed Information Disclosure Statement (IDS).

/SDB/

Sherry D. Brinkley
Petitions Examiner
Office of Petitions

[1] *The request to apply the issue fee to the new Notice may be satisfied by completing and returning the new Part B – Fee(s) Transmittal Form (along with any balance due at the time of submission). Petitioner is advised that the Issue Fee Transmittal Form must be completed and timely submitted to avoid abandonment of the application.*

UNITED STATES PATENT AND TRADEMARK OFFICE

Commissioner for Patents
United States Patent and Trademark Office
P.O. Box 1450
Alexandria, VA 22313-1450
www.uspto.gov

FINNEGAN, HENDERSON, FARABOW,
GARRETT & DUNNER LLP
901 NEW YORK AVENUE, NW
WASHINGTON DC 20001-4413

COPY MAILED

AUG 03 2009

OFFICE OF PETITIONS

| | |
|---|---|
| In re Application of | : |
| Christensen et al. | : DECISION ON APPLICATION |
| Application No. 10/529,375 | : FOR |
| Filed: October 28, 2005 | : PATENT TERM ADJUSTMENT |
| Atty. Dkt. No. 08059.0013 | : |

This is a decision on the "APPLICATION FOR PATENT TERM ADJUSTMENT," filed on April 27, 2009. Applicants request that the initial determination of patent term adjustment be corrected from twenty-eight (28) days to three hundred sixty-five (365) days.

The application for patent term adjustment is GRANTED.

The Office has updated the PALM and PAIR screens to reflect that the correct Patent Term Adjustment (PTA) determination at the time of the mailing of the Notice of Allowance is THREE HUNDRED SIXTY-FIVE (365) days. A copy of the updated PAIR screen, showing the correct determination, is enclosed.

On February 9, 2009, the Office mailed the Determination of Patent Term Adjustment under 35 U.S.C. 154(b) in the above-identified application. The Notice stated that the patent term adjustment to date is 28 days. The instant application for patent term adjustment was timely filed.[1] Applicants assert entitlement to additional patent term adjustment for office delay because the Office action mailed on January 25, 2007 was subsequently vacated, and a new Office action was mailed on December 28, 2007.

Specifically, a letter was mailed on April 12, 2007, stating that "the final rejection mailed on 1/25/07 is vacated. This

[1] PALM records indicate that the issue fee was paid on April 27, 2009.

action was incorrectly mailed to the applicant." On December 28, 2007, a new Office action was mailed.

Applicants state that the subject application is not subject to a terminal disclaimer.

Upon review, applicants' assertion is correct. Since the Office action mailed on January 25, 2007, was vacated, and a new Office action was mailed on December 28, 2007, the period of adjustment under 35 U.S.C. § 154(b)(1)(A)(i) and 37 CFR 1.703(a)(1) is the period beginning the day after the date that is 14 months after the date the application fulfilled the requirements of 35 U.S.C. 371, December 29, 2006, and ending on the date of mailing of the Office action mailed on December 28, 2007, or 365 days.

In view thereof, the correct determination of patent term adjustment at the time of the mailing of the notice of allowance is THREE HUNDRED SIXTY-FIVE (365) days (365 days of PTO delay, reduced by 0 days of Applicant delay).

The Office acknowledges submission of the $200.00 fee set forth in 37 CFR 1.18(e). No additional fees are required.

The Office of Data Management has been advised of this decision. The application is thereby forwarded to the Office of Data Management for issuance of the patent. The patent term adjustment indicated on the patent (as shown on the Issue Notification mailed about three weeks prior to patent issuance) will include any additional adjustment accrued both for Office delay in issuing the patent more than four months after payment of the issue fee and satisfaction of all outstanding requirements, and if applicable, for the Office taking in excess of three years to issue the patent (to the extent that the three-year period does not overlap with periods already accorded).

Telephone inquiries regarding this matter should be directed to Senior Petitions Attorney Douglas I. Wood at (571) 272-3231.

Nancy Johnson
Senior Petitions Attorney
Office of Petitions

Encl: Revised PALM Calculation

Day : Friday
Date: 7/31/2009

# PALM INTRANET

Time: 15:12:09

| PTA Calculations for Application: 10/529375 | | | |
|---|---|---|---|
| Application Filing Date: | 10/28/2005 | PTO Delay (PTO): | 28 |
| Issue Date of Patent: | | .Three Years: | 0 |
| Pre-Issue Petitions: | 0 | Applicant Delay (APPL): | 0 |
| Post-Issue Petitions: | 0 | Total PTA (days): | 365 |
| PTO Delay Adjustment: | 337 | | |

**File Contents History**

| Number | Date | Contents Description | PTO | APPL | START |
|---|---|---|---|---|---|
| 69 | 07/31/2009 | ADJUSTMENT OF PTA CALCULATION BY PTO | | 28 | |
| 68 | 07/31/2009 | ADJUSTMENT OF PTA CALCULATION BY PTO | | 28 | |
| 67 | 07/31/2009 | ADJUSTMENT OF PTA CALCULATION BY PTO | 28 | | |
| 66 | 07/31/2009 | ADJUSTMENT OF PTA CALCULATION BY PTO | 365 | | |
| 59 | 02/09/2009 | MAIL NOTICE OF ALLOWANCE | | | |
| 58 | 02/04/2009 | ISSUE REVISION COMPLETED | | | |
| 57 | 02/04/2009 | DOCUMENT VERIFICATION | | | |
| 56 | 02/04/2009 | NOTICE OF ALLOWANCE DATA VERIFICATION COMPLETED | | | |
| 55 | 02/04/2009 | NOTICE OF ALLOWABILITY | | | |
| 54 | 12/22/2008 | INFORMATION DISCLOSURE STATEMENT CONSIDERED | | | |
| 53 | 12/22/2008 | INFORMATION DISCLOSURE STATEMENT (IDS) FILED | | | |
| 52 | 01/09/2009 | DATE FORWARDED TO EXAMINER | | | |
| 51 | 12/22/2008 | AMENDMENT SUBMITTED/ENTERED WITH FILING OF CPA/RCE | | | |
| 50 | 01/09/2009 | DATE FORWARDED TO EXAMINER | | | |
| 49 | 12/22/2008 | REQUEST FOR CONTINUED EXAMINATION (RCE) | | | |
| 48 | 01/09/2009 | DISPOSAL FOR A RCE/CPA/129 (EXPRESS ABANDONMENT IF CPA) | | | |
| 47 | 12/22/2008 | INFORMATION DISCLOSURE STATEMENT (IDS) FILED | | | |
| 46 | 12/22/2008 | INFORMATION DISCLOSURE STATEMENT (IDS) FILED | | | |
| 45 | 12/22/2008 | WORKFLOW - REQUEST FOR RCE - BEGIN | | | |
| 44 | 09/22/2008 | MAIL FINAL REJECTION (PTOL - 326) | | | |

| | | | | | |
|---|---|---|---|---|---|
| 43 | 09/19/2008 | FINAL REJECTION | | | |
| 41 | 08/21/2008 | DATE FORWARDED TO EXAMINER | | | |
| 40 | 07/21/2008 | RESPONSE AFTER NON-FINAL ACTION | | | |
| 39 | 04/21/2008 | MAIL NON-FINAL REJECTION | | | |
| 38 | 04/17/2008 | NON-FINAL REJECTION | | | |
| 29 | 02/14/2008 | DATE FORWARDED TO EXAMINER | | | |
| 28 | 01/25/2008 | RESPONSE TO ELECTION / RESTRICTION FILED | | | |
| 27 | 12/28/2007 | MAIL RESTRICTION REQUIREMENT | | | |
| 26 | 12/21/2007 | REQUIREMENT FOR RESTRICTION / ELECTION | | | |
| 21 | 04/12/2007 | CASE DOCKETED TO EXAMINER IN GAU | | | |
| 20 | 04/10/2007 | SUBTRACT FAOM COUNT | | | |
| 19 | 04/12/2007 | MAIL NOTICE OF WITHDRAWN ACTION | | | |
| 18 | 04/10/2007 | LETTER WITHDRAWING / VACATING OFFICE ACTION | | | |
| 17 | 01/25/2007 | MAIL FINAL REJECTION (PTOL - 326) | 28 | | -1 |
| 16 | 01/22/2007 | FINAL REJECTION | | | |
| 15 | 01/22/2007 | CASE DOCKETED TO EXAMINER IN GAU | | | |
| 14 | 06/07/2006 | CASE DOCKETED TO EXAMINER IN GAU | | | |
| 13 | 05/22/2006 | IFW TSS PROCESSING BY TECH CENTER COMPLETE | | | |
| 12 | 03/12/2006 | CLEARED BY OIPE CSR | | | |
| 11 | 03/12/2006 | CLEARED BY OIPE CSR | | | |
| 10 | 03/12/2006 | CLEARED BY OIPE CSR | | | |
| 9 | 03/12/2006 | CLEARED BY OIPE CSR | | | |
| 8 | 03/12/2006 | CLEARED BY OIPE CSR | | | |
| 7 | 10/28/2005 | 371 COMPLETION DATE | | | |
| 6 | 02/10/2006 | APPLICATION DISPATCHED FROM OIPE | | | |
| 5 | 02/10/2006 | NOTICE OF DO/EO ACCEPTANCE MAILED | | | |
| 4 | 10/28/2005 | ADDITIONAL APPLICATION FILING FEES | | | |
| 3 | 10/28/2005 | A STATEMENT BY ONE OR MORE INVENTORS SATISFYING THE REQUIREMENT UNDER 35 USC 115, OATH OF THE APPLIC | | | |

**Search Another: Application#** Search

**EXPLANATION OF PTA CALCULATION**

**EXPLANATION OF PTE CALCULATION**

To go back, right click here and select Back. To go forward, right click here and select Forward. To refresh, right click here

and select Refresh.
Back to OASIS | Home page

UNITED STATES PATENT AND TRADEMARK OFFICE

Commissioner for Patents
United States Patent and Trademark Office
P.O. Box 1450
Alexandria, VA 22313-1450
www.uspto.gov

Paper No.

TOWNSEND AND TOWNSEND
AND CREW, LLP
TWO EMBARCADERO CENTER
EIGHTH FLOOR
SAN FRANCISCO CA 94111-3834

**MAILED**

MAR 16 2009

OFFICE OF PETITIONS

| | | |
|---|---|---|
| In re Application of | : | |
| Nakamura et al. | : | |
| Application No. 10/529,381 | : | ON APPLICATION FOR |
| Filed: November 28, 2005 | : | PATENT TERM ADJUSTMENT |
| Attorney Docket No. 082368-002810US | : | |

This is in response to the REQUEST FOR RECONSIDERATION OF PATENT TERM ADJUSTMENT DETERMINATION UNDER 37 C.F.R. §1.705(b) filed February 4, 2009. Applicants submit that the patent term adjustment should be increased from three hundred twenty-six (326) to a minimum of four hundred ninety-eight (498) days. Referring to Wyeth v. Dudas, No. 07-1492 (D.D.C. September 30, 2008), applicants request this correction on the basis that the Office will take in excess of three years to issue this patent[1].

As the instant application for patent term adjustment requests reconsideration of the patent term adjustment as it relates to the Office's failure to issue the patent within 3 years of the filing date, a decision is being **held in abeyance** until after the actual patent date. Knowledge of the actual date the patent issues is required to calculate the amount, if any, of additional patent term patentee is entitled to for Office failure to issue the patent within 3 years. See § 1.703(b).

Applicant is given TWO (2) MONTHS from the issue date of the patent to file a written request for reconsideration of the patent term adjustment for Office failure to issue the patent within 3 years. A copy of this decision should accompany the

[1] Applicants assert this calculation assuming that the patent issues May 19, 2009.

request. Applicant may seek such consideration without payment of an additional fee. However, as to all other bases for seeking reconsideration of the patent term adjustment indicated in the patent, all requirements of § 1.705(d) must be met. Requests for reconsideration on other bases must be timely filed and must include payment of the required fee.

Rather than file the request for reconsideration of Patent Term Adjustment at the time of the mailing of the notice of allowance, applicant is advised that they may wait until the time of the issuance of the patent and file a request for reconsideration of the patent term pursuant to 37 CFR 1.705(d). The USPTO notes that it does not calculate the amount of time earned pursuant to 37 CFR 1.702(b) until the time of the issuance of the patent and accordingly, the Office will consider any request for reconsideration of the patent term adjustment due to an error in the calculation of 37 CFR 1.702(b) to be timely if the request for reconsideration is filed within two months of the issuance of the patent.

The Office acknowledges submission of the $200.00 fee set forth in 37 CFR 1.18(e). No additional fees are required.

The application is being forwarded to the Office of Data Management for issuance of the patent. The revised patent term adjustment indicated on the patent (as shown on the Issue Notification mailed about three weeks prior to patent issuance) will include any additional adjustment accrued both for Office delay in issuing the patent more than four months after payment of the issue fee and satisfaction of all outstanding requirements, and for the Office taking in excess of three years to issue the patent (to the extent that the three-year period does not overlap with periods already accorded).

Telephone inquiries specific to this decision should be directed to the undersigned at (571) 272-3219.

Nancy Johnson
Senior Petitions Attorney
Office of Petitions

UNITED STATES PATENT AND TRADEMARK OFFICE

UNITED STATES DEPARTMENT OF COMMERCE
United States Patent and Trademark Office
Address: COMMISSIONER FOR PATENTS
P.O. Box 1450
Alexandria, Virginia 22313-1450
www.uspto.gov

| APPLICATION NO. | FILING DATE | FIRST NAMED INVENTOR | ATTORNEY DOCKET NO. | CONFIRMATION NO. |
|---|---|---|---|---|
| 10/529,385 | 03/28/2005 | Kazuhisa Ogawa | SON-2838 | 6707 |

7590 02/11/2008
RADER FISHMAN & GRAUER PLLC
LION BUILDING
1233 20TH STREET N.W., SUITE 501
WASHINGTON, DC 20036

| EXAMINER |
|---|
| ROSASCO, STEPHEN D |

| ART UNIT | PAPER NUMBER |
|---|---|
| 1795 | |

| MAIL DATE | DELIVERY MODE |
|---|---|
| 02/11/2008 | PAPER |

## DECISION DISMISSING PETITION UNDER 37 CFR 1.138(d)

*The declaration of express abandonment will not be recognized*

This is in response to the petition under 37 CFR 1.138(d), requesting for a refund of any previously paid search fee and excess claims fee in the above-identified application.

The petition is dismissed.

The express abandonment will **not** be recognized for the reason(s) indicated below:

1. ☐ The petition was not filed in sufficient time to permit the appropriate officials to recognize the abandonment before an examination has been made of the application. See 37 CFR 1.138(d).

2. ☐ The petition was not signed by a party authorized by 37 CFR 1.33(b)(1), (3) or (4).

3. ☒ The application is not an application filed under 35 U.S.C. 111(a) on or after December 8, 2004.

4. ☐ The petition for express abandonment under 1.138(d) is dismissed because the applicant did not pay any search fee and excess claims fees in the above-identified application.

Telephone inquiries should be directed to the Office of Data Management at (571) 272-4200.

Tammy Kenty
Patent Publication Branch
Office of Data Management



FORM PET651D (Rev. 08/07)