UNITED STATES PATENT AND TRADEMARK OFFICE

Commissioner for Patents
United States Patent and Trademark Office
P.O. Box 1450
Alexandria, VA 22313-1450
www.uspto.gov

13 SEP 2006

GENENTECH, INC.
1 DNA WAY
SOUTH SAN FRANCISCO CA 94080

In re Application of	:
AGGARWAL et al.	:
Application No.: 10/533,069	:
PCT No.: PCT/US03/34381	:
Int. Filing Date: 28 October 2003	:
Priority Date: 29 October 2002	:
Attorney Docket No.: P1982R1	:
For: COMPOSITIONS AND METHODS FOR THE	:
TREATMENT OF IMMUNE RELATED DISEASES	:

09/13/2006 SPASHEIR 00000005 070630 10533069
01 FC:1463 200.00 DA
02 FC:1617 130.00 DA

DECISION

This is a decision on applicants' petition under 37 CFR 1.47(a) filed 03 April 2006 in the United States Patent and Trademark Office (USPTO). The petition is **DISMISSED** without prejudice.

BACKGROUND

On 28 October 2003, applicants filed international application PCT/US03/34381, which designated the United States and claimed a priority date of 29 October 2002. A copy of the international application was communicated from the International Bureau to the USPTO on 13 May 2004. The thirty-month period for paying the basic national fee in the United States expired at midnight on 29 April 2005.

On 28 April 2005, applicants filed a submission for entry into the national stage in the United States which was accompanied by, *inter alia*, the U.S. Basic National Fee.

On 03 January 2006, the United States Designated/Elected Office (DO/EO/US) mailed a NOTIFICATION OF MISSING REQUIREMENTS UNDER 35 U.S.C. 371 (Form PCT/DO/EO/905) indicating, *inter alia*, that an oath or declaration of the inventors in compliance with 37 CFR 1.497(a)-(b) and the surcharge under 37 CFR 1.492(h) for filing any of the search fee, the examination fee, or the oath or declaration after the date of the commencement of the national stage were required.

On 03 April 2006, applicants filed a petition under 37 CFR 1.47(a) which was accompanied by, *inter alia*, a declaration of inventors, a declaration in support of the 37 CFR 1.47(a) petition by Barbara Hebert, copies of two letters sent to the non-signing inventor

Sudeepta Aggarwal by David A. Carpenter, a copy of a letter to Barbara Hebert from FedEx Express for details regarding a package shipped February 14, 2006, and a copy of a FedEx Track Shipments Detailed Results for a package shipped March 16, 2006.

DISCUSSION

A petition under 37 CFR 1.47(a) must be accompanied by: (1) the fee under 37 CFR 1.17(h); (2) factual proof that the missing joint inventor refuses to execute the application or cannot be reached after diligent effort; (3) a statement of the last known address of the missing inventor; and (4) an oath or declaration by each 37 CFR 1.47(a) applicant on his or her own behalf and on behalf of the non-signing joint inventor.

As to item (1), the petition fee of $200 has been charged to Deposit Account 07-0630.

Item (2) has not been met. It is not clear whether it is being alleged that Sudeepta Aggarwal refuses to execute the application or that she cannot be reached after diligent effort. The two are distinct. *See, e.g.,* MPEP 409.03(d), item I. "Inventor Cannot Be Reached" and item II. "Refusal to Join." A first communication was sent to Sudeepta Aggarwal on 14 February 2006. A second communication was sent to Sudeepta Aggarwal on 16 March 2006. The FedEx Track Shipments Detailed Results for the package shipped March 16, 2006 indicate that it was left at the front door of the indicated address. No indication is made whether a signature was obtained for the package mailed 14 February 2006. Accordingly, it is not clear if Sudeepta Aggarwal received the packages and did not respond or if she no longer resides there and her whereabouts are unknown. If it is being alleged that Sudeepta Aggarwal refuses to sign, the inventor must be presented with a complete copy of the application papers (specification, including claims, drawing, and oath or declaration) for a refusal to be established. Thus, if Sudeepta Aggarwal resides at the last known address, a complete copy of the application papers would still need to be presented to her. If it is being alleged that the inventor cannot be reached or found, copies of documentary evidence such as *internet searches*, certified mail return receipts, cover letters of instructions, and telegrams, that support a finding that the non-signing inventor could not be found or reached should be made part of the affidavit or declaration. See MPEP § 409.03, item I.

As to item (3), a clear statement of the last known address of the non-signing inventor has not been presented.

Item (4) has not been met. The declaration filed 03 April 2006 is not in compliance with 37 CFR 1.497(a)-(b). The declaration includes three page two's and three page three's. This suggests that all pages of the declaration were not present at the time of execution for each inventor, thus rendering the execution improper. A copy of the entire declaration submitted to applicant(s) for signing must be provided. Each executed declaration must identify all of the inventors and the citizenship of all of the inventors. Each submitted declaration must be complete, even if executed by only one of the inventors. It has been construed that the names Jill

Schoenfeld, as appears on the published international application, and Jill R. Schoenfeld, as appears on the declaration filed 03 April 2006, refer to the same person. If this interpretation is incorrect, applicants are required to notify the Office of PCT Legal Administration immediately. The surcharge under 37 CFR 1.492(h) for filing any of the search fee, the examination fee, or the oath or declaration after the date of the commencement of the national stage is required has been charged to Deposit Account 07-0630.

CONCLUSION

For the above reasons, applicants' petition under 37 CFR 1.47(a) is **DISMISSED** without prejudice.

If reconsideration on the merits of this petition is desired, a proper response must be filed within TWO (2) MONTHS from the mail date of this decision. **Failure to timely file the proper response will result in abandonment of this application.** Any reconsideration request should include a cover letter entitled "Renewed Petition Under 37 CFR 1.47(a)". No additional petition fee is required. Extensions of time may be obtained under 37 CFR 1.136(a).

Please direct further correspondence with respect to this matter to Mail Stop PCT, Commissioner for Patents, Office of PCT Legal Administration, P.O. Box 1450, Alexandria, Virginia 22313-1450, with the contents of the letter marked to the attention of the Office of PCT Legal Administration.

Daniel Stemmer
Legal Examiner
PCT Legal Affairs
Office of Patent Cooperation Treaty
Legal Administration
Telephone: (571) 272-3301
Facsimile: (571) 273-0459

0 8 JAN 2007

UNITED STATES PATENT AND TRADEMARK OFFICE

Commissioner for Patents
United States Patent and Trademark Office
P.O. Box 1450
Alexandria, VA 22313-1450
www.uspto.gov

GENENTECH, INC.
1 DNA WAY
SOUTH SAN FRANCISCO CA 94080

In re Application of	:	
AGGARWAL et al.	:	
Application No.: 10/533,069	:	DECISION
PCT No.: PCT/US03/34381	:	
Int. Filing Date: 28 October 2003	:	
Priority Date: 29 October 2002	:	
Attorney Docket No.: P1982R1	:	
For: COMPOSITIONS AND METHODS FOR THE	:	
TREATMENT OF IMMUNE RELATED DISEASES	:	

This is a decision on applicants' "RENEWED PETITION UNDER 37 CFR 1.47(a)" filed 03 January 2007 in the United States Patent and Trademark Office (USPTO). The petition is **DISMISSED** as **MOOT**.

BACKGROUND

On 28 October 2003, applicants filed international application PCT/US03/34381, which designated the United States and claimed a priority date of 29 October 2002. A copy of the international application was communicated from the International Bureau to the USPTO on 13 May 2004. The thirty-month period for paying the basic national fee in the United States expired at midnight on 29 April 2005.

On 28 April 2005, applicants filed a submission for entry into the national stage in the United States which was accompanied by, *inter alia*, the U.S. Basic National Fee.

On 03 January 2006, the United States Designated/Elected Office (DO/EO/US) mailed a NOTIFICATION OF MISSING REQUIREMENTS UNDER 35 U.S.C. 371 (Form PCT/DO/EO/905) indicating, *inter alia*, that an oath or declaration of the inventors in compliance with 37 CFR 1.497(a)-(b) and the surcharge under 37 CFR 1.492(h) for filing any of the search fee, the examination fee, or the oath or declaration after the date of the commencement of the national stage were required.

On 03 April 2006, applicants filed a petition under 37 CFR 1.47(a) which was accompanied by, *inter alia*, a declaration of inventors, a declaration in support of the 37 CFR 1.47(a) petition by Barbara Hebert, copies of two letters sent to the non-signing inventor

Sudeepta Aggarwal by David A. Carpenter, a copy of a letter to Barbara Hebert from FedEx Express for details regarding a package shipped February 14, 2006, and a copy of a FedEx Track Shipments Detailed Results for a package shipped March 16, 2006.

On 13 September 2006, a decision was mailed dismissing applicants' petition under 37 CFR 1.47(a).

On 03 January 2007, applicants submitted the instant "RENEWED PETITION UNDER 37 CFR 1.47(a)" which was accompanied by several declarations of inventors including a declaration signed by previously non-signing inventor Sudeepta Aggarwal.

DISCUSSION

Since a 37 CFR 1.497 declaration has been executed by all the joint inventors, the petition for status under 37 CFR 1.47(a) is moot. The application need not be returned to the Office of PCT Legal Affairs for any further consideration of the status under 37 CFR 1.47 and no such status should be indicated on this application file.

The declarations of inventors filed 03 January 2007 are in compliance with 37 CFR 1.497(a)-(b).

CONCLUSION

For the above reasons, applicants' petition under 37 CFR 1.47(a) is **DISMISSED** as **MOOT**.

This application is being forwarded to the National Stage Processing Branch of the Office of PCT Operations to continue national stage processing of the application.

Daniel Stemmer
Legal Examiner
PCT Legal Affairs
Office of Patent Cooperation Treaty
Legal Administration
Telephone: (571) 272-3301
Facsimile: (571) 273-0459

UNITED STATES PATENT AND TRADEMARK OFFICE

UNITED STATES DEPARTMENT OF COMMERCE
United States Patent and Trademark Office
Address: COMMISSIONER FOR PATENTS
P.O. Box 1450
Alexandria, Virginia 22313-1450
www.uspto.gov

APPLICATION NO.	FILING DATE	FIRST NAMED INVENTOR	ATTORNEY DOCKET NO.	CONFIRMATION NO.
10/533,069	01/03/2007	Sudeepta Aggarwal	GNE-0269 R1	5360

35489 7590 05/21/2010
Arnold & Porter LLP (24126)
Attn: IP Docketing Dept.
555 Twelfth Street, N.W.
Washington, DC 20004-1206

EXAMINER
ALLEN, MARIANNE P

ART UNIT	PAPER NUMBER
1647	

MAIL DATE	DELIVERY MODE
05/21/2010	PAPER

Please find below and/or attached an Office communication concerning this application or proceeding.

The time period for reply, if any, is set in the attached communication.

UNITED STATES PATENT AND TRADEMARK OFFICE

Commissioner for Patents
United States Patent and Trademark Office
P.O. Box 1450
Alexandria, VA 22313-1450
www.uspto.gov

MAY 21 2010

Arnold & Porter LLP (24126)
Attn: IP Docketing Dept.
555 Twelfth Street, N.W.
Washington DC 20004-1206

In re Application of :	:
Aggarwal et al.	:
Serial No.: 10/533,069	: PETITION
Filed: January 3, 2007	:
Attorney Docket No: **GNE-0269 R1**	:

This is in reply to the petition filed April 28, 2010 under 37 CFR § 1.181 to provide written acknowledgment of the information disclosure statement (IDS) filed April 28, 2010.

DISCUSSION

Applicants petition to consider the references cited in the attached Information Disclosure Statement. This Information Disclosure Statement was submitted after receipt of a Final Official Action or Notice of Allowance, but before payment of the issue fee, and was therefore accompanied by this Petition to Consider in accordance with the provisions of 37 C.F.R. 1.97(d). Applicants have also submitted the Certification as required by C.F.R. 1.97(d) and paid the requisite petition fee of $130.00.

Accordingly, applicants have provided the necessary documents to have the IDS of April 28, 2010 considered.

In view of the above reason, the petition is **GRANTED.**

This application will be forwarded to the examiner for consideration of the IDS filed on April 28, 2010.

Should there be any questions about this decision please contact Marianne C. Seidel by letter addressed to Director, TC 1600, at the address listed above, or by telephone at 571-272-0584 or by facsimile sent to the general Office facsimile number, 703-872-9306.

Marianne C. Seidel
Quality Assurance Specialist
Technology Center 1600

11 APR 2006

#5

UNITED STATES PATENT and TRADEMARK OFFICE

COMMISSIONER FOR PATENTS
UNITED STATES PATENT AND TRADEMARK OFFICE
P.O BOX 1450
ALEXANDRIA, VA 22313-1450
www.uspto.gov

OBLON, SPIVAK, MCCLELLAND,
MAIER & NEUSTADT, P.C.
1940 DUKE STREET
ALEXANDRIA VA 22314

In re Application of	:	DECISION ON
GRIEBEL et al	:	
PCT No.: PCT/JP2003/13848	:	
Application No.: 10/533,081	:	
Int. Filing Date: 29 October 2003	:	PAPERS FILED
Priority Date: 29 October 2002	:	
Attorney's Docket No.: 271529US0PCT	:	
For: QUINOLINE DERIVATIVES AND...	:	
COMPOSITIONS CONTAINING THE SAME	:	UNDER 37 CFR 1.42

This is a decision on the declaration filed 12 January 2006, which has been treated as a request for status under 37 CFR 1.42.

BACKGROUND

On 23 April 2005, applicants filed a transmittal letter for entry into the national stage in the United States which was accompanied by, inter alia, the requisite basic national fee as required by 35 U.S.C. 371(c)(1). However, applicants did not satisfy the requirement set forth by 35 U.S.C. 371(c)(4) because an executed oath or declaration was not provided.

On 07 December 2005, the United States Designated/Elected Office (DO/EO/US) mailed a "NOTIFICATION OF MISSING REQUIREMENTS UNDER 35 U.S.C. 371 IN THE UNITED STATES DESIGNATED/ELECTED OFFICE (DO/EO/US)" (Form PCT/DO/EO/905) which informed applicant, inter alia, that an "Oath or Declaration of the inventors, in compliance with 37 CFR 1.497(a) and(b), identifying the application by International application number and international filing date" must be submitted within two months from the date of this notice or by 32 months from the priority date, whichever is later, in order to avoid abandonment of the national stage application.

In response to the Notification mailed on 07 December 2005, applicants filed a declaration on 12 January 2006 signed by Naoko HIRAI as heiress of the inventor, Hisamaru HIRAI, now deceased.

DISCUSSION

The declaration is unacceptable at this time because it is not clear that Naoko HIRAI is the sole heir for the deceased inventor, Hisamaru HIRAI. (see MPEP § 409.01(a)).

That is, there may be other heirs who are required to also sign the declaration. The declaration must indicate that she is the sole heir for the deceased inventor in order for the Office to accept the application under 37 CFR 1.42.

In addition, the declaration did not satisfy 37 CFR §1.497(b)(2) because it does not state the citizenship, residence, and mailing address of the deceased inventor as required.

Moreover, a submission of a declaration executed by all of the heirs of the deceased inventor is construed as an indication that no legal representative of the deceased's estate has been appointed or is statutorily required to be appointed. If this interpretation is incorrect applicants are required to promptly notify the Office of such and submit a declaration properly executed by the legal representative(s) of the deceased inventor.

CONCLUSION

For the above reasons, the request for status under 37 CFR 1.42 is **not accepted**.

If reconsideration on the merits of this petition is desired, a proper reply must be filed within TWO (2) MONTHS from the mail date of this decision. Failure to respond will result in the abandonment of the application. Any reconsideration request should include a cover letter entitled "Renewed Request Under 37 CFR 1.42." Extensions of time are available under 37 CFR 1.136(a).

Any further correspondence with respect to this matter should be addressed to the Mail Stop PCT, Commissioner for Patents, Office of PCT Legal Administration, P.O. Box 1450, Alexandria, Virginia 22313-1450, with the contents of the letter marked to the attention of the office of PCT Legal Administration.

Rafael Bacares
PCT Legal Examiner
PCT Legal Office
Tel: (571) 272-3276
Fax: (571) 273-0459

1 3 MAR 2007

UNITED STATES PATENT and TRADEMARK OFFICE

COMMISSIONER FOR PATENTS
UNITED STATES PATENT AND TRADEMARK OFFICE
P.O BOX 1450
ALEXANDRIA, VA 22313-1450
www.uspto.gov

OBLON, SPIVAK, MCCLELLAND,
MAIER & NEUSTADT, P.C.
1940 DUKE STREET
ALEXANDRIA VA 22314

In re Application of	DECISION ON RENEWED
GRIEBEL et al	
PCT No.: PCT/JP2003/13848	
Application No.: 10/533,081	
Int. Filing Date: 29 October 2003	PAPERS FILED
Priority Date: 29 October 2002	
Attorney's Docket No.: 271529US0PCT	
For: QUINOLINE DERIVATIVES AND...	
COMPOSITIONS CONTAINING THE SAME	UNDER 37 CFR 1.42

This is a decision on the "Renewed Submission Under 37 CFR 1.42," filed on 09 November 2006.

BACKGROUND

In a decision from this office dated 11 April 2006, the papers filed on 12 January 2006 were not accepted under 37 CFR 1.42. The reason was that it was not clear if Naoko HIRAI is the sole heir for the deceased inventor, Hisamaru HIRAI.

On 09 November 2006, applicants submitted the renewed submission under 37 C.F.R. §1.42.

DISCUSSION

Applicants have provided an executed declaration, which sets forth that Naoko HIRAI is the legal representative of the deceased inventor Hisamaru HIRAI.

Accordingly, the requirements under 37 CFR 1.42 are satisfied and the declaration is acceptable at this time.

CONCLUSION

The renewed submission filed under 37 CFR 1.42 is **ACCEPTED**.

The application is being returned to the United States Designated/Elected Office (DO/EO/US) for processing in accordance with this decision. The 35 U.S.C.§ 371(c)(1), (c)(2), and (c)(4) date of this application as **09 November 2006**.

Rafael Bacares
PCT Legal Examiner
PCT Legal Office
Tel: (571) 272-3276
Fax: (571) 273-0459

05 APR 2006

#9

UNITED STATES PATENT AND TRADEMARK OFFICE

Commissioner for Patents
United States Patent and Trademark Office
P.O. Box 1450
Alexandria, VA 22313-1450
www.uspto.gov

SIEMENS CORPORATION
INTELLECTUAL PROPERTY DEPARTMENT
170 WOOD AVENUE SOUTH
ISELIN NJ 08830

In re Application of THUY-PHUONG LE et al. Application No.: 10/533,083 PCT No.: PCT/DE03/03029 Int. Filing: 12 September 2003 Priority Date: 28 October 2002 Attorney Docket No.: 2002PO3505WOUS For: METHOD AND APPARATUS FOR EXCHANGING DATA USING A TUNNEL CONNECTION	DECISION ON RESPONSE TO OFFICE COMMUNICATION

This application is before the PCT Legal Office for consideration of matters arising under 35 U.S.C. 371. This is also responsive to applicant's communication filed via facsimile on 17 March 2006 in the United States Patent and Trademark Office (USPTO) in the above-captioned application.

On 30 September 2005, a Notification of Missing Requirements (FORM PCT/DO/EO/905) was mailed to applicant indicating that the declaration submitted on 28 April 2005 with the request for entry into the national stage, listed the inventor as Thuy-Phuong Le, rather than Le Thuy-Phuong as listed on the published international application.

On 30 November 2005, a reply to the Notification of Missing Requirements was filed via facsimile.

On 01 March 2006, a decision on the reply was mailed indicating that an explanation was required as to how the error in the inventor's name occurred, e.g. is this a correction of a transliteration or typographical error. An explanation was required as to how the error in the inventor's name occurred, e.g. is this a correction of a transliteration or typographical error. The declaration as filed was not in compliance with 37 CFR 1.66 or 1.68 as it identified a legal entity not identified on the international application and was unacceptable as filed. [1]

On 17 March 2006, applicant filed the correction of the inventor's name, notifying the Office that the correct inventor's name is Thuy-Phuong Le as indicated in the declaration filed 28 April 2005 rather than Le Thuy-Phuong, as incorrectly indicated in the international application as the result of a typographical error (a comma indicating last name before first).

---

[1]Section 201.03 of the Manual of Patent Examining Procedure states where a typographical or transliteration error in the spelling of an inventor's name is discovered, the Office should simply be notified of the error to correct the name of the inventor.

Applicants' explanation of the difference in the order of Thuy-Phuong Le's name is accepted and noted for the record.

For the reasons above, the Request is **GRANTED**. No petition fee is required.

This application is being forwarded to the National Stage Processing Branch of the International Division for further processing. The 35 U.S.C. 371(c)(1), (c)(2) and (c)(4) date is 28 April 2005.

Cynthia M. Kratz

Cynthia M. Kratz
Attorney Advisor
PCT Legal Office

Telephone: (571) 272-3286
Facsimile: (571) 272-0459

07 NOV 2005

UNITED STATES PATENT AND TRADEMARK OFFICE

Commissioner for Patents
United States Patent and Trademark Office
P.O. Box 1450
Alexandria, VA 22313-1450
www.uspto.gov

NIXON & VANDERHYE, P.C.
901 NORTH GLEBE ROAD, 11TH
ARLINGTON, VA 22203

In re Application of: VAUTHIER, Christine, et al. U.S. Application No.: 10/533,084 PCT No.: PCT/FR2003/001435 International Filing Date: 10 June 2003 Priority Date: 17 September 2002 Attorney's Docket No.: 1721-89 For: COPOLYMER AND HEMOPROTEIN BASED NOVEL COMPOUNDS AND USES THEREOF	DECISION ON PETITION FOR REVIVAL OF ABANDONED APPLICATION UNDER 37 CFR 1.137(b)

The petition for revival under 37 CFR 1.137(b) filed 28 April 2005 in the above-captioned application is hereby **GRANTED** as follows:

Applicants' statement that "the entire delay in filing the required reply from the due date for the required reply until the filing of a grantable petition under 37 CFR 1.137(b) was unintentional"satisfies the requirements of 37 CFR 1.137(b)(3).

Applicants have now submitted the basic national fee, and the requirements of 37 CFR 1.137(b) have been satisfied. Therefore, the request to revive the application is granted as to the national stage in the United States of America.

It is noted that, on 07 June 2005, applicants filed executed declaration materials. However, it does not appear that a declaration executed by inventor Patrick COUVREUR has been submitted.[1] In addition, an English translation of the international application has not been filed.

This application is being returned to the National Stage Processing Division of the Office of PCT Operations for further processing in accordance with this decision, including the mailing of a Notification Of Missing Requirements (Form PCT/DO/EO/905) requiring submission of an

[1] There is a copy of the declaration that has what appears to be a signature in the bottom corner of Mr. COUVREUR's signature box. However, this signature is not near the actual signature line, and the signature box has been dated by what appears to be a different inventor (in a different color ink). Under these circumstances, it cannot be concluded that this copy of the declaration has been executed by Mr. COUVREUR.

oath or declaration in compliance with 37 CFR 1.497 executed by inventor Patrick COUVREUR and a translation into English of the international application.

Richard M. Ross
PCT Petitions Attorney
Office Of PCT Legal Administration
Telephone: (571) 272-3296
Facsimile: (571) 273-0459

UNITED STATES PATENT AND TRADEMARK OFFICE

Commissioner for Patents
United States Patent and Trademark Office
P.O. Box 1450
Alexandria, VA 22313-1450
www.uspto.gov

TAROLLI, SUNDHEIM, COVELL & TUMMINO L.L.P.
1300 EAST NINTH STREET, SUITE 1700
CLEVEVLAND, OH 44114

COPY MAILED

JAN 06 2009

OFFICE OF PETITIONS

In re Application of	:	
Raymond Lillback	:	
Application No. 10/533,097	:	ON PETITION
Filed: April 25, 2006	:	
Attorney Docket No. 16-170 PCT	:	

This is a decision on the petition under the unintentional provisions of 37 CFR 1.137(b), filed November 25, 2008, to revive the above-identified application.

The petition is **GRANTED**.

The application became abandoned for failure to reply in a timely manner to the Restriction Requirement, mailed March 26, 2008 , which set a shortened statutory period for reply of one (1) month or thirty (30) days (whichever is later). No extensions of time under the provisions of 37 CFR 1.136(a) were obtained. Accordingly, the application became abandoned on April 27, 2008.

The petition satisfies the requirements of 37 CFR 1.137(b) in that petitioner has supplied (1) the reply in the form of an election of the invention to be examined, (2) the petition fee of $1,620, and (3) an adequate statement of unintentional delay.

An extension of time under 37 CFR 1.136 must be filed prior to the expiration of the maximum extendable period for reply. See In re Application of S., 8 USPQ2d 1630, 1631 (Comm'r Pats. 1988). Since the $1,730 extension of time fee submitted with the petition on November 25, 2008 was subsequent to the maximum extendable period for reply, this fee is unnecessary and will be credited to petitioner's credit card account.

Telephone inquiries concerning this decision should be directed to Alicia Kelley at (571) 272-6059.

This matter is being referred to Technology Center 3753 for further examination on the merits.

/SDB/

Sherry D. Brinkley
Petitions Examiner
Office of Petitions

UNITED STATES PATENT AND TRADEMARK OFFICE

Commissioner for Patents
United States Patent and Trademark Office
P.O. Box 1450
Alexandria, VA 22313-1450
www.uspto.gov

COPY MAILED

AUG 26 2009

OFFICE OF PETITIONS

Catherine Joyce
Liniak, Berenato & White
6550 Rock Spring Drive
Suite 240
Bethesda MD 20817

In re Application of	:	
Alexander V. Bocharov, et al.	:	
Application No. 10/533,103	:	DECISION ON PETITION
Filed: June 5, 2006	:	TO WITHDRAW
Attorney Docket No. 3514.115	:	FROM RECORD
	:	

This is a decision on the Request to Withdraw as attorney or agent of record under 37 C.F.R. § 1.36(b), filed July 10, 2009.

The request is **NOT APPROVED**.

A grantable request to withdraw as attorney/agent of record must be signed by every attorney/agent seeking to withdraw or contain a clear indication that one attorney is signing on behalf of another/others. A request to withdraw will not be approved unless at least 30 (thirty) days would remain between the date of approval and the later of the expiration date of a time to file a response or the expiration date of the maximum time period which can be extended under 37 C.F.R. § 1.136(a).

The request cannot be approved because all three certification boxes on the PTO/SB/63 have not been checked.

All future communications from the Office will continue to be directed to the above-listed address until otherwise notified by applicant.

Telephone inquiries concerning this decision should be directed to Terri Williams at 571-272-2991.

Terri Williams
Petitions Examiner
Office of Petitions

cc: **OFFICE OF TECHNOLOGY TRANSFER**
NATIONAL INSTITUTES OF HEALTH
6011 Executive Blvd., Suite 325
MSC 7660
Bethesda, MD 20892-7660

UNITED STATES PATENT AND TRADEMARK OFFICE

Commissioner for Patents
United States Patent and Trademark Office
P.O. Box 1450
Alexandria, VA 22313-1450
www.uspto.gov

Catherine Joyce
Liniak, Berenato & White
6550 Rock Spring Drive
Suite 240
Bethesda, MD 20817

COPY MAILED

SEP 30 2009

OFFICE OF PETITIONS

In re Application of	:	
Alexander V. Bocharov, et al.	:	
Application No. 10/533,103	:	DECISION ON PETITION
Filed: April 28, 2005	:	TO WITHDRAW
Attorney Docket No. 6137NIDDK-2-PUS	:	FROM RECORD
	:	

This is a decision on the renewed Request to Withdraw as attorney or agent of record under 37 C.F.R. § 1.36(b), filed September 9, 2009.

The request is **NOT APPROVED** because it is moot.

A review of the file record indicates that the power of attorney to Liniak, Berenato & White has been revoked by the assignee of the patent application on August 26, 2009. Accordingly, the request to withdraw under 37 C.F.R. § 1.36(b) is moot.

All future communications from the Office will continue to be directed to the below-listed address until otherwise notified by applicant.

Telephone inquires concerning this decision should be directed to Terri Johnson at 571-272-2991.

Terri Johnson
Petitions Examiner
Office of Petitions

cc: **NIH-OTT**
1560 Broadway
Suite 1200
Denver, CO 80238

01 MAR 2006

UNITED STATES PATENT AND TRADEMARK OFFICE

Commissioner for Patents
United States Patent and Trademark Office
P.O. Box 1450
Alexandria, VA 22313-1450
www.uspto.gov

BASF Corporation
Anne Gerry Sabourin
26701 Telegraph Road
Southfield, Michigan 48034-2442

In re Application of
MEISENBURG et al.
Application No.: 10/533,112
PCT No.: PCT/EP03/11895
Int. Filing Date: 27 October 2003
Priority Date: 15 November 2002
Attorney Docket No.: PAT-01092
For: COMPOUNDS WHICH CAN BE ACTIVATED BY ACTINIC RADIATION AND CONTAIN URETHANE GROUPS, METHOD FOR THE PRODUCTION THEREOF AND USE OF THE SAME

DECISION ON PETITION
UNDER 37 CFR 1.137(b)

The petition to revive under 37 CFR 1.137(b) filed 04 November 2005 in the above-captioned application is hereby **GRANTED** as follows:

Applicant's statement that "the entire delay in filing the required reply from the due date for the reply until the filing of a grantable petition under 37 CFR 1.137(b) was unintentional" meets the requirements of 37 CFR 1.137(b)(3).

A review of the application file reveals that applicant has submitted the basic national fee and the requirements of 37 CFR 1.137(b) have been satisfied. Therefore, the request to revive the application abandoned under 35 U.S.C. 371(d) is granted as to the National stage in the United States of America.

This application is being returned to the United States Designated/Elected Office for processing in accordance with this decision.

Anthony Smith

Anthony Smith
Attorney-Advisor
Office of PCT Legal Administration
Tel: (571) 272-3298
Fax: (571) 273-0459

UNITED STATES PATENT AND TRADEMARK OFFICE

UNITED STATES DEPARTMENT OF COMMERCE
United States Patent and Trademark Office
Address: COMMISSIONER FOR PATENTS
P.O. Box 1450
Alexandria, Virginia 22313-1450
www.uspto.gov

APPLICATION NO.	FILING DATE	FIRST NAMED INVENTOR	ATTORNEY DOCKET NO.	CONFIRMATION NO.
10/533,114	06/29/2006	Rolf Leuenberger	030705-184	5286

7590 07/25/2008
BUCHANAN, INGERSOLL & ROONEY PC
POST OFFICE BOX 1404
ALEXANDRIA, VA 22313-1404

EXAMINER
STAFIRA, MICHAEL PATRICK

ART UNIT	PAPER NUMBER
2886	

NOTIFICATION DATE	DELIVERY MODE
07/25/2008	ELECTRONIC

DECISION DISMISSING PETITION UNDER 37 CFR 1.138(d)

The declaration of express abandonment will not be recognized

This is in response to the petition under 37 CFR 1.138(d), requesting for a refund of any previously paid search fee and excess claims fee in the above-identified application.

The petition is dismissed.

The express abandonment will **not** be recognized for the reason(s) indicated below:

1. ☐ The petition was not filed in sufficient time to permit the appropriate officials to recognize the abandonment before an examination has been made of the application. See 37 CFR 1.138(d).
2. ☐ The petition was not signed by a party authorized by 37 CFR 1.33(b)(1), (3) or (4).
3. ☒ The application is not an application filed under 35 U.S.C. 111(a) on or after December 8, 2004.
4. ☐ The petition for express abandonment under 1.138(d) is dismissed because the applicant did not pay any search fee and excess claims fees in the above-identified application.

Telephone inquiries should be directed to the Office of Data Management at (571) 272-4200.

Betty Powell

Patent Publication Branch
Office of Data Management

FORM PET651D (Rev. 08/07)

13 JUL 2007

UNITED STATES PATENT AND TRADEMARK OFFICE

Commissioner for Patents
United States Patent and Trademark Office
P.O. Box 1450
Alexandria, VA 22313-1450
www.uspto.gov

SEYFARTH SHAW, LLP
815 CONNECTICUT AVENUE, N.W.
SUITE 500
WASHINGTON DC 20006

In re Application of PARK et al. Application No.: 10/533,123 PCT No.: PCT/KR03/02242 Int. Filing: 23 October 2003 Priority Date: 29 October 2002 Attorney Docket No.: 42149-0003 For: POLYURETHANE FOAM DRESSING FOR WOUND FILLER AND METHOD FOR MANUFACTURING THEREOF	DECISION ON PETITION TO REVIVE UNDER 37 CFR 1.137(b)

The petition to revive under 37 CFR 1.137(b) filed 16 February 2007 in the above-captioned application is hereby **GRANTED** as follows:

Applicant's statement that the "entire delay in filing the required reply from the due date for the required reply until the filing of a grantable petition under 37 CFR 1.137(b) was unintentional" meets the requirements of 37 CFR 1.137(b)(3).

A review of the application file reveals that the declaration, executed by the inventors and in compliance with 37 CFR 1.497(a) and (b), has been provided. The required petition fee of $750 was also paid. Thus, the requirements of 37 CFR 1.137(b) have been satisfied. Therefore, the request to revive the application abandoned under 35 U.S.C. 371(d) is granted as to the National stage in the United States of America.

The $65 surcharge for filing the declaration after the thirty month period will be charged to applicant's deposit account per his authorization.

This application is being forwarded to the United States Designated/Elected Office for further processing. The 35 U.S.C. 371(c)(1), (c)(2) and (c)(4) date is 16 February 2007.

Cynthia M. Kratz

Cynthia M. Kratz
Attorney Advisor
PCT Legal Office
Office of PCT Legal Administration

Telephone: (571) 272-3286
Facsimile: (571) 273-0459

UNITED STATES PATENT AND TRADEMARK OFFICE

Commissioner for Patents
United States Patent and Trademark Office
P.O. Box 1450
Alexandria, VA 22313-1450
www.uspto.gov

MAILED

MAR 01 2010

OFFICE OF PETITIONS

BROWDY AND NEIMARK, P.L.L.C.
624 NINTH STREET, NW
SUITE 300
WASHINGTON DC 20001-5303

In re Patent No. 7,601,366	:	DECISION ON REQUEST
Terlecky, et al.	:	FOR
Issue Date: October 13, 2009	:	RECONSIDERATION OF
Application No. 10/533,124	:	PATENT TERM ADJUSTMENT
Filed: December 27, 2005	:	and
Atty Docket No. TERLECKY1A	:	NOTICE OF INTENT TO ISSUE
	:	CERTIFICATE OF CORRECTION

This is a decision on the petition filed on December 14, 2009, which is being treated as a petition under 37 CFR 1.705(d) requesting that the patent term adjustment indicated on the above-identified patent be corrected to indicate that the term of the above-identified patent is extended or adjusted by nine hundred fourteen (914) days.

The petition to correct the patent term adjustment indicated on the above-identified patent to indicate that the term of the above-identified patent is extended or adjusted by nine hundred twelve (912) days[1] is **GRANTED to the extent indicated herein.**

---

[1] The "B" delay period is 529 days, not 531 days. In calculating the "B" delay period, patentee used the date of Saturday April 30, 2005, as the date the national stage commenced under 35 U.S.C. 371(b). In an international application, the "B" delay period is based on the failure of the Office to issue a patent within three years after the national stage commenced under 35 U.S.C. 371(b) or (f). See 1.702(b). The priority date of this application is October 30, 2002. The date that is 30 months from the priority date is Saturday, April 30, 2005. As the national stage cannot commence on a weekend or federal holiday, the date the national stage commenced in this application is Monday, May 2, 2005. Thus, "B" delay is 529 days, counting the number of days beginning on May 3, 2008, and ending on October 13, 2009, the date of issuance. See 1.703(b).

The Office will *sua sponte* issue a certificate of correction. Pursuant to 37 CFR 1.322, the Office will not issue a certificate of correction without first providing assignee or patentee an opportunity to be heard. Accordingly, patentees are given **one (1) month or thirty (30) days**, whichever is longer, from the mail date of this decision to respond. No extensions of time will be granted under § 1.136.

The Office acknowledges submission of the $200.00 fee set forth in 37 CFR 1.18(e). No additional fees are required.

The application is being forwarded to the Certificates of Branch for issuance of a certificate of correction. The Office will issue a certificate of correction indicating that the term of the above-identified patent is extended or adjusted by nine hundred twelve **(912)** days.

Telephone inquiries specific to this matter should be directed to Kenya A. McLaughlin, Petitions Attorney at (571) 272-3222.

Christina Tartera Donnell

Christina Tartera Donnell
Senior Petitions Attorney
Office of Petitions

Enclosure: Copy of DRAFT Certificate of Correction

DRAFT COPY

UNITED STATES PATENT AND TRADEMARK OFFICE

CERTIFICATE OF CORRECTION

PATENT : 7,601,366 B2

DATED : Oct. 13, 2009

INVENTOR(S) : Terlecky, et al.

It is certified that error appears in the above-identified patent and that said Letters Patent is hereby corrected as shown below:

On the cover page,

[*] Notice: Subject to any disclaimer, the term of this patent is extended or adjusted under 35 USC 154(b) by (394) days

Delete the phrase "by 394 days" and insert – by 912 days--

UNITED STATES PATENT AND TRADEMARK OFFICE

Commissioner for Patents
United States Patent and Trademark Office
P.O. Box 1450
Alexandria, VA 22313-1450
www.uspto.gov

BAKER BOTTS LLP
C/O INTELLECTUAL PROPERTY DEPARTMENT
THE WARNER, SUITE 1300
1299 PENNSYLVANIA AVE, NW
WASHINGTON DC 20004-2400

COPY MAILED

MAR 06 2008

OFFICE OF PETITIONS

In re Application of :
VAN DER GIESSEN et al. :
Application No. 10/533,135 : ON PETITION
Filed: 11/18/2005 :
Attorney Docket No. 066511.0111 :

This is a decision on the petition under 37 CFR 1.137(a), filed January 23, 2008, to revive the above-identified application.

The petition under 37 CFR 1.137(a) is **DISMISSED**.

Any request for reconsideration of this decision must be submitted within **TWO (2) MONTHS** from the mail date of this decision. The reconsideration request should include a cover letter entitled "Renewed Petition under 37 CFR 1.137(a)." Extensions of time under 37 CFR 1.136(a) are permitted. No additional fee is required for filing a "Renewed Petition under 37 CFR 1.137(a)."

The application became abandoned for failure to reply in a timely manner to the nonfinal Office action, mailed May 8, 2007, which set a three-month shortened statutory period for reply. No extensions of time under the provisions of 37 CFR 1.136(a) were obtained. Accordingly, the application became abandoned on August 9, 2007. On November 23, 2007, the Office mailed a Notice of Abandonment.

On petition, applicant asserted that the delay in replying to the nonfinal Office action was unavoidable due to a clerical error in failing to download the Office action in response to the e-mail notification by the USPTO. Specifically, applicant explained:

> On May 8, 2007, the PTO notified Applicant's representative of three (3) pieces of PTO Correspondence via e-mail. (Redacted copy enclosed.) Applicant's representative's docketing staff downloaded two (2) of the three (3) pieces of PTO Correspondence, but, due to an error on the part of a docketing staff member in the performance of this clerical function, the

docketing staff failed to download the Office Action for the above-captioned patent application. According to the Transaction History from PAIR (copy enclosed), the PTO did not mail a postcard reminder to Applicant's representative. When such postcard reminders are received, Applicant's representatives docketing staff download or confirm that they have downloaded the PTO Correspondence and make and initial an annotation on the postcard reminder confirming the action taken. Applicant's representative does not have a postcard reminder relating to the Office Action for the above-captioned patent application or any indication that Applicant's representative received such a postcard reminder. Because the docketing staff failed to download the Office Action in response to the initial notification, and, in the absence of a postcard reminder, the docketing staff did not enter the deadlines for responding to the Office Action in Applicant's representative's computer docketing system (copy enclosed) or on a back-up docketing calendar. According to the Transaction History from PAIR, the PTO notified Applicant's representative of the Notice of Abandonment on November 23, 2007 (copy enclosed).

After Applicant's representative downloaded the Notice of Abandonment on November 23, 2007, it immediately located and downloaded the missed Office Action. Applicant's representative analyzed the Office Action and the cited references, and reported the Office Action on January 4, 2008. Applicant's representative received instructions to reply to the Office Action and to file a petition for revival of the application. Thus, despite the Christmas holidays and the complexity of the Office Action, Applicant's representative has prepared and filed a petition for revival of the application and a reply to the Office Action within two (2) months of receipt of the Notice of Abandonment. Therefore, Applicant's representative acted diligently upon receiving the Notice of Abandonment, and Applicant maintains that the entire delay in the filing of the reply from the due date of the reply until the filing of a grantable petition pursuant to 37 C.F.R. § 1.137(a), was unavoidable.

A grantable petition to revive an abandoned application under 37 CFR 1.137(a) must be accompanied by:

(1) The reply required to the outstanding Office action or notice, unless previously filed;

(2) The petition fee as set forth in § 1.17(l);

(3) A showing to the satisfaction of the Director that the entire delay in filing the required reply from the due date for the reply until the filing of a grantable petition pursuant to 37 CFR 1.137(a) was unavoidable; and

(4) Any terminal disclaimer (and fee set forth in § 1.20(d)) required pursuant 37 CFR 1.137(d).

The present petition lacks item (3).

The Director may revive an abandoned application if the delay in responding to the relevant outstanding Office requirement is shown to the satisfaction of the Director to be "unavoidable."

35 U.S.C. § 133. Decisions on reviving abandoned applications on the basis of "unavoidable" delay have adopted the reasonably prudent person standard in determining if the delay was unavoidable:

> The word 'unavoidable' . . . is applicable to ordinary human affairs, and requires no more or greater care or diligence than is generally used and observed by prudent and careful men in relation to their most important business. It permits them in the exercise of this care to rely upon the ordinary and trustworthy agencies of mail and telegraph, worthy and reliable employees, and such other means and instrumentalities as are usually employed in such important business. If unexpectedly, or through the unforeseen fault or imperfection of these agencies and instrumentalities, there occurs a failure, it may properly be said to be unavoidable, all other conditions of promptness in its rectification being present. In re Mattullath, 38 App. D.C. 497, 514-15 (1912) (quoting Ex parte Pratt, 1887 Dec. Comm'r Pat. 31, 32-33 (1887)); see also Winkler v. Ladd, 221 F. Supp. 550, 552, 138 USPQ 666, 167-68 (D.D.C. 1963), aff'd, 143 USPQ 172 (D.C. Cir. 1963); Ex parte Henrich, 1913 Dec. Comm'r Pat. 139, 141 (1913). In addition, decisions on revival are made on a "case-by-case basis, taking all the facts and circumstances into account." Smith v. Mossinghoff, 671 F.2d 533, 538, 213 USPQ 977, 982 (D.C. Cir. 1982). Finally, a petition cannot be granted where a petitioner has failed to meet his or her burden of establishing that the delay was "unavoidable." Haines v. Quigg, 673 F. Supp. 314, 316-17, 5 USPQ2d 1130, 1131-32 (N.D. Ind. 1987).

The showing of record is inadequate to establish unavoidable delay within the meaning of 35 U.S.C. § 133 and 37 CFR 1.137(a). Specifically, an application is "unavoidably" abandoned where petitioner, or counsel for petitioner, takes all action necessary for a proper response to the outstanding Office action, but through the intervention of unforeseen circumstances, such as failure of mail, facsimile, or the negligence of otherwise reliable employees, the response is not timely received in the Office. Ex parte Pratt, 1887 Dec. Comm'r Pat. 31 (Comm'r Pat. 1887).

A delay resulting from an error (e.g., a docketing error) on the part of an employee in the performance of a clerical function may provide the basis for a showing of "unavoidable" delay, provided it is shown that: (1) the error was the cause of the delay at issue; (2) there was in place a business routine for performing the clerical function that could reasonably be relied upon to avoid errors in its performance; (3) and the employee was sufficiently trained and experienced with regard to the function and routine for its performance that reliance upon such employee represented the exercise of due care. See MPEP 711.03(c)(III)(C)(2).

An adequate showing requires statements by all persons with direct knowledge of the circumstances surrounding the delay, setting forth the facts as they know them. An applicant must supply a thorough explanation of the docketing and call-up system in use and must identify the types of records kept and the person responsible for the maintenance of the system. This showing must include copies of mail ledgers, docket sheets, file-wrappers and such other records as may exist which would substantiate an error in docketing, and include an indication as to why the system failed in this instance to provide adequate notice that a reply was due. An applicant must also supply information regarding the training provided to the personnel responsible for the docketing error, degree of supervision of their work,

examples of other work functions carried out, and checks on the described work that were used to assure proper execution of assigned tasks.

In the present petition, applicant averred that the clerical error in failing to download the nonfinal Office action in response to the e-mail notification caused the delay at issue and that the firm had a business routine in place for performing the clerical function that could reasonably be relied upon to avoid such clerical errors. Applicant asserted that their legal representatives and the firm's docketing staff were sufficiently trained and experienced in the performance of the USPTO's electronic filing and monitoring procedures that reliance upon these employees represented the exercise of due care. Additionally, applicant indicated that each member of the docketing staff had in-house training on docketing procedures. Applicant explained that the staff member in charge of the docketing staff has more than eight (8) years of experience with the law firm as a patent secretary and a docketing staff member.

The Office notes that an adequate showing requires statements by all persons with direct knowledge of the circumstances surrounding the delay, setting forth the facts as they know them. Applicant did not identify the docketing staff or the staff member in charge who failed to download the nonfinal Office Action in response to the email notification, and thus, did not enter the deadline for reply in the docketing system. Furthermore, applicant did not provide the USPTO with statements from these employees, who had firsthand knowledge of the facts that led to the delay at issue. Accordingly, the current showing of record is inadequate to establish unavoidable delay within the meaning of 37 CFR 1.137(a).

If applicant cannot provide the evidence necessary to establish unavoidable delay, applicant may file a petition pursuant to 37 CFR 1.137(b) on the basis of unintentional delay. A grantable petition pursuant to 37 CFR 1.137(b) must be accompanied by:

(1) The required reply (unless previously submitted);

(2) The petition fee as set forth in § 1.17(m);

(3) A statement that the entire delay in filing the required reply from the due date for the reply until the filing of a grantable petition was unintentional. The Director may require additional information where there is a question whether the delay was unintentional.

(4) Any terminal disclaimer (and fee set forth in § 1.20(d)) required pursuant 37 CFR 1.137(d).

Further correspondence with respect to this matter should be addressed as follows:

By mail: Mail Stop Petition
Commissioner for Patents
P.O. Box 1450
Alexandria, VA 22313-1450

By FAX: (571) 273-8300
Attn: Office of Petitions

By hand: Customer Service Window
Randolph Building
401 Dulany Street
Alexandria, VA 22314

Correspondence may also be submitted via the Electronic Filing System of the USPTO.

Telephone inquiries related to this decision may be directed to the undersigned at (571) 272-3211.

Christina Tartera Donnell

Christina Tartera Donnell
Senior Petitions Attorney
Office of Petitions

UNITED STATES PATENT AND TRADEMARK OFFICE

Commissioner for Patents
United States Patent and Trademark Office
P.O. Box 1450
Alexandria, VA 22313-1450
www.uspto.gov

BAKER BOTTS LLP
C/O INTELLECTUAL PROPERTY DEPARTMENT
THE WARNER, SUITE 1300
1299 PENNSYLVANIA AVE, NW
WASHINGTON DC 20004-2400

COPY MAILED
JUL 24 2008

In re Application of	:	
VAN DER GIESSEN et al.	:	
Application No. 10/533,135	:	ON PETITION
Filed: 11/18/2005	:	
Attorney Docket No. 066511.0111	:	

This is a decision on the petition under 37 CFR 1.137(b), filed April 25, 2008, to revive the above-identified application.

The petition under 37 CFR 1.137(b) is **GRANTED**.

The application became abandoned for failure to reply in a timely manner to the nonfinal Office action, mailed May 8, 2007, which set a three-month shortened statutory period for reply. No extensions of time under the provisions of 37 CFR 1.136(a) were obtained. Accordingly, the application became abandoned on August 9, 2007. On November 23, 2007, the Office mailed a Notice of Abandonment.

Petitioner has met the requirements to revive the above-identified application pursuant to 37 CFR 1.137(b). Petitioner submitted the required reply, paid the petition fee, and made the proper statement of unintentional delay. Accordingly, the petition is granted.

This matter is being referred to Technology Center AU 1655.

Telephone inquiries specific to this decision may be directed to the undersigned at (571) 272-3211.

Christina Tartera Donnell

Christina Tartera Donnell
Senior Petitions Attorney
Office of Petitions

United States Patent and Trademark Office

1 0 DEC 2007

Commissioner for Patents
United States Patent and Trademark Office
P.O. Box 1450
Alexandria, VA 22313-1450
www.uspto.gov

WENDEROTH, LIND & PONACK, L.L.P.
2033 K STREET N. W.
SUITE 800
WASHINGTON DC 20006-1021

In re Application of	:	
Matsumoto et al.	:	
Application No. 10/533,136	:	
PCT No.: PCT/JP2003/013933	:	
Int. Filing Date: 30 October 2003	:	
Priority Date: 31 October 2002	:	DECISION
Atty. Docket No.: 2005_0711A	:	
For: Spray Gun For Electrostatic Painting	:	

This is in response to the "Request For Corrected Filing Receipt" filed on 13 March 2006.

BACKGROUND

This international application was filed on 30 October 2003, claimed an earliest priority date of 31 October 2002, and designated the U.S. The International Bureau transmitted a copy of the published international application to the USPTO on 13 May 2004. 30 month time period for paying the basic national fee in the United States expired at midnight on 30 April 2005. Applicants filed, *inter alia*, the basic national fee on 29 April 2005.

On 18 November 2005, a Notification of Missing Requirements (Form PCT/DO/EO/905) was mailed to applicants, requiring an English translation of the international application and the processing fee under 37 CFR 1.492(i).

On 19 January 2006, applicants filed a response.

On 22 February 2006, a Notice of Acceptance (Form PCT/DO/EO/903) was mailed to applicants, reflecting a 35 U.S.C. 371(c)(1), (2) and (4) date and a completion date, both of 19 January 2006.

DISCUSSION

Petitioner requests "correction" of the filing receipt to show a date of 18 January 2006 rather than 19 January 2006. Inspection of the IFW for this application reveals that the correspondence at issue was stamped as received by the USPTO on 19 January 2006, rather than the date proposed by counsel. Review of the electronic fee records shows payment of $400.00 of claims fees with a "Mailroom Date" of 18 January 2006, but the payment of the processing fee under 37 CFR 1.492(i) shows a "Mailroom Date" of 19 January 2006. Therefore, the official record suggests that the correspondence and fee at issue were in fact filed on the 19th, rather than the 18th as urged by applicants. Applicants should adduce additional evidence (e.g., postcard or Express Mail evidence) to support any renewed request for modification of the 35 U.S.C. 371 dates.

It is noted that the response to the 18 November 2005 Notification of Missing Requirements was due on 18 January 2006; since the reply was not received until 19 January 2006, a one-month extension of time under 37 CFR 1.136(a) was required. The $120.00 fee is being charged to Deposit Account 23-0975, as authorized by the Transmittal Letter filed on 29 April 2005.

CONCLUSION

The request is **REFUSED**, without prejudice.

Any request for reconsideration must be filed within **TWO (2) MONTHS** from the mail date of this decision. Extensions of time may be obtained under 37 CFR 1.136(a).

Please direct any further correspondence with respect to this matter to the Assistant Commissioner for Patents, Mail Stop PCT, P.O. Box 1450, Alexandria, VA 22313-1450, and address the contents of the letter to the attention of the Office of PCT Legal Administration.

George Dombroske
PCT Legal Examiner
Office of PCT Legal Administration
Tel: (571) 272-3283
Fax: (571) 273-0459

UNITED STATES PATENT AND TRADEMARK OFFICE

UNITED STATES DEPARTMENT OF COMMERCE
United States Patent and Trademark Office
Address: COMMISSIONER FOR PATENTS
P.O. Box 1450
Alexandria, Virginia 22313-1450
www.uspto.gov

LAHIVE & COCKFIELD, LLP
FLOOR 30, SUITE 3000
ONE POST OFFICE SQUARE
BOSTON, MA 02109

Mail Date: 04/21/2010

Applicant	: Seiji Sugiura	: DECISION ON REQUEST FOR
Patent Number	: 7618735	: RECALCULATION of PATENT
Issue Date	: 11/17/2009	: TERM ADJUSTMENT IN VIEW
Appliction No	: 10/533,143	: OF WYETH AND NOTICE OF INTENT TO
Filed	: 04/27/2005	: ISSUE CERTIFICATE OF CORRECTION
		:

The Request for Recalculation is **GRANTED** to the extent indicated.

The patent term adjustment has been determined to be **939** days. The USPTO will *sua sponte* issue a certificate of correction reflecting the amount of PTA days determined by the recalculation.

Prior to the issuance of the certificate of correction, the USPTO will afford patentee an opportunity to be heard and request reconsideration. Accordingly, patentee has **one month or thirty (30) days**, whichever is longer, to file a request for reconsideration of this patent term adjustment calculation. See 35 U.S.C. 154(b)(3)(B)(ii) and 37 CFR 1.322(a)(4). No extensions of time will be granted under 37 CFR 1.136.

Patentee should use document code PET.OP if electronically filing a request for reconsideration of this patent term adjustment calculation. The patentee must also include the information required by 37 CFR 1.705(b)(2) and the fee required by 37 CFR 1.18(e). If patentee does not file a timely request for reconsideration of this patent term adjustment calculation including the information required by 37 CFR 1.705(b)(2) and the fee required by 37 CFR 1.18(e), the USPTO will issue a certificate of correction reflecting the PTA determination noted above.

Patentee should be aware that in order to preserve the right to review in the United States District Court for the District of Columbia of the USPTO patent term adjustment determination, patentee must ensure that he or she also take the steps required under 35 U.S.C. 154(b)(4)(A) in a timely manner. Nothing in the request for recalculation should be construed as providing an alternative time frame for commencing a civil action under 35 U.S.C. 154(b)(4)(A).

Any questions concerning this decision should be directed to the Office of Patent Legal Administration at 571-272-7702.

UNITED STATES PATENT AND TRADEMARK OFFICE

#3

Commissioner for Patents
United States Patent and Trademark Office
P.O. Box 1450
Alexandria, VA 22313-1450
www.uspto.g

13 JAN 2006

BOZICEVIC, FIELD & FRANCIS, LLP
1900 University Avenue, Suite 200
East Palo Alto, California 94303

In re Application of:	
MASUDA, Esteban	DECISION ON PETITION
U.S. Application No.: 10/533,144	UNDER 37 CFR 1.137(b)
Int'l Application No.: PCT/US03/27370	
Int'l Filing Date: 30 August 2003	
Priority Date: 30 August 2002	
Attorney's Docket No.: RIGL-023	
For: METHODS OF SCREENING CYCLIC PEPTIDES AND IDENTIFYING TARGETS THEREFOR	

The petition to revive under 37 CFR 1.137(b) filed 27 April 2005 in the above-captioned application is hereby **GRANTED** as follows:

Applicant's statement that "the entire delay in filing the required reply from the due date for the required reply until the filing of a grantable petition under 37 CFR 1.137(b) was unintentional" satisfies the requirement of 37 CFR 1.137(b)(3).

Applicant has now submitted the basic national fee, and the requirements of 37 CFR 1.137(b) have been satisfied. Therefore, the request to revive the application is granted as to the United States of America.

This application is being returned to the National Stage Processing Branch of the Office of PCT Operations for further processing in accordance with this decision, including the mailing of a Notification Of Missing Requirements (Form PCT/DO/EO/905) requiring submission of an oath or declaration in compliance with 37 CFR 1.497 and the surcharge for filing the oath or declaration later than thirty months after the priority date.

Richard M. Ross
PCT Petitions Attorney
Office Of PCT Legal Administration
Telephone: (571) 272-3296
Facsimile: (571) 273-0459

UNITED STATES PATENT AND TRADEMARK OFFICE

UNITED STATES DEPARTMENT OF COMMERCE
United States Patent and Trademark Office
Address: COMMISSIONER FOR PATENTS
P.O. Box 1450
Alexandria, Virginia 22313-1450
www.uspto.gov

APPLICATION NO.	FILING DATE	FIRST NAMED INVENTOR	ATTORNEY DOCKET NO.	CONFIRMATION NO.
10/533,150	04/27/2005	Takayuki Taguchi	10921.315USWO	2382

52835 7590 12/04/2009
HAMRE, SCHUMANN, MUELLER & LARSON, P.C.
P.O. BOX 2902
MINNEAPOLIS, MN 55402-0902

EXAMINER
LEVKOVICH, NATALIA A

ART UNIT	PAPER NUMBER
1797	

MAIL DATE	DELIVERY MODE
12/04/2009	PAPER

Please find below and/or attached an Office communication concerning this application or proceeding.

The time period for reply, if any, is set in the attached communication.

Commissioner for Patents
United States Patent and Trademark Office
P.O. Box 1450
Alexandria, VA 22313-1450
www.uspto.gov

wk

DEC 0 4 2009

Mailed:

In re application of	:	
Taguchi et al.	:	DECISION ON
Serial No. 10/533,150	:	PETITION
Filed: April 27, 2005	:	
For: Analyzing Tool And Device	:	

This is a response to a PETITION UNDER RULE 37 C.F.R. 1.181 (no fee) filed October 21, 2009 requesting that the Examiner enter Applicant's Amendment of January 8, 2009 and to also request a stay of prosecution until a decision regarding this petition is reached.

A Notice of Non-Compliant Amendment was mailed on April 6, 2009 in response to Applicants' Amendment of January 8, 2009 and the second Notice of Non-Compliant Amendment mailed on September 21, 2009 was in response to Applicants' response to the Notice mailed on June 8, 2009.

The January 8, 2009 Amendment amended claims 1-3, 5, 7, 8 and 10-12 and cancelled claim 4. This amendment was filed in response to the non-final office action that was mailed July 8, 2008. The Examiner's basis for non-entry of the amendment was that claims 1-3 and 5-12 as now presented are directed to an invention that is independent or distinct from the invention of the original claims 1-12 and that the invention of original claims 1-12 have been constructively elected by original presentation for prosecution on the merits.

The claims originally presented and acted upon by the Office on their merits determine the invention elected by an applicant in the application. Subsequently presented claims to an invention other than that acted upon should be treated as provided in MPEP § 821.03.

821.03 Claims for Different Invention Added After an Office Action

Claims added by amendment following action by the examiner, MPEP § 818.01, § 818.02(a), to an invention other than previously claimed, should be treated as indicated by 37 CFR 1.145.

37 CFR 1.145 Subsequent presentation of claims for different invention.

If, after an office action on an application, the applicant presents claims directed to an invention distinct from and independent of the invention previously claimed, the applicant will be required to restrict the claims to the invention previously claimed if the amendment is entered, subject to reconsideration and review as provided in §§ 1.143 and 1.144

The Examiner asserts the original claims were drawn to a single species that is currently removed by the Applicant in the latest amendment. Applicant states that the originally filed claim 1 was broad enough in scope to cover the features added in the latest amendment. The

Examiner agrees that claim 1, was broad and not directed to Species II at the time of the first action on the merits. The Examiner asserts that the features of Species II were added later, after the first action on the merits, while the features of Species I, were removed from all the dependent claims.

37 CFR § 1.146 Election of species.

In the first action on an application containing a generic claim to a generic invention (genus) and claims to more than one patentably distinct species embraced thereby, the examiner may require the applicant in the reply to that action to elect a species of his or her invention to which his or her claim will be restricted if no claim to the genus is found to be allowable. However, if such application contains claims directed to more than a reasonable number of species, the examiner may require restriction of the claims to not more than a reasonable number of species before taking further action in the application.

It is noted that original claims 1-12 were examined without requiring Applicants to elect a species.

DECISION

The Petition is **GRANTED**.

Original claim 1 is generic to the amended claim 1 and broad enough to cover Species I and Species II.

The Examiner is directed to enter the amendment.

/Gregory L Mills/
Gregory L. Mills, Acting Director
Technology Center 1700
Chemical and Materials Engineering

Douglas P. Mueller
HAMRE, SCHUMANN, MUELLER & LARSON, P.C.
P.O. BOX 2902
MINNEAPOLIS MN 55402-0902

UNITED STATES PATENT AND TRADEMARK OFFICE

Commissioner for Patents
United States Patent and Trademark Office
P.O. Box 1450
Alexandria, VA 22313-1450
www.uspto.gov

MERCK
P O BOX 2000
RAHWAY NJ 07065-0907

MAILED

MAY 25 2010

OFFICE OF PETITIONS

In re Patent No. 7,485,640	:
Carling et al.	: DECISION ON REQUEST FOR
Issue Date: February 3, 2009	: RECONSIDERATION OF
Application No. 10/533,152	: PATENT TERM ADJUSTMENT
Filed: April 27, 2005	: AND NOTICE OF INTENT
Attorney Docket No. T1567YP	: TO ISSUE CERTIFICATE OF
Title: IMIDAZOPYRAZINONES AS	: CORRECTION
GABA-A RECEPTOR ANXIOLYTICS	:

This is a decision on the petition filed on March 9, 2009, which is being treated as a petition under 37 CFR 1.705(d) requesting that the patent term adjustment indicated on the above-identified patent be corrected to indicate that the term of the above-identified patent is extended or adjusted by eight hundred forty-seven (847) days.

The petition to correct the patent term adjustment indicated on the above-identified patent to indicate that the term of the above-identified patent is extended or adjusted by eight hundred forty-two (842) days is **GRANTED to the extent indicated herein.**

Patentee calculated the B delay based on an application filing date of April 27, 2005. However, the calculation of delay pursuant to 37 CFR 1.702(b) in this international application is based on a national stage commencement date of May 6, 2005, the date of expiration of the 30-month period pursuant to 35 U.S.C. 371(b). The period beginning on May 7, 2008 and ending on February 3, 2009, the date of issuance is 277 days. Considering the period of overlap of 15 days, the patent term adjustment is increased by 262 days for B delay.

The Office will *sua sponte* issue a certificate of correction. Pursuant to 37 CFR 1.322, the Office will not issue a certificate of correction without first providing assignee or

patentee an opportunity to be heard. Accordingly, patentees are given **one (1) month or thirty (30) days**, whichever is longer, from the mail date of this decision to respond. No extensions of time will be granted under § 1.136.

The application is being forwarded to the Certificates of Branch for issuance of a certificate of correction. The Office will issue a certificate of correction indicating that the term of the above-identified patent is extended or adjusted by **eight hundred forty-two (842)** days.

The Office acknowledges submission of the $200.00 fee set forth in 37 CFR 1.18(e). No additional fees are required.

Telephone inquiries specific to this matter should be directed to the undersigned at (571) 272-3219.

Nancy Johnson
Senior Petitions Attorney
Office of Petitions

Enclosure: Copy of DRAFT Certificate of Correction

UNITED STATES PATENT AND TRADEMARK OFFICE

CERTIFICATE OF CORRECTION

PATENT : 7,485,640 B2

DATED : **February 3, 2009** **DRAFT**

INVENTOR(S) : Carling et al.

It is certified that error appears in the above-identified patent and that said Letters Patent is hereby corrected as shown below:

On the cover page,

[*] Notice: Subject to any disclaimer, the term of this patent is extended or adjusted under 35 USC 154(b) by 580 days

Delete the phrase "by 580 days" and insert – by 842 days--

20 SEP 2005

#3

UNITED STATES PATENT AND TRADEMARK OFFICE

Commissioner for Patents
United States Patent and Trademark Office
P.O. Box 1450
Alexandria, VA 22313-1450
www.uspto.gov

WARE FRESSOLA VAN DER SLUYS & ADOLPHSON, LLP
Bradford Green Bldg 5
755 Main Street, P.O. Box 224
Monroe, CT 06468

In re Application of	:	
BRANDT, Jan	:	
Application No.: 10/533,155	:	
PCT No.: PCT/FI03/00402	:	**DECISION**
Int. Filing Date: 26 May 2003	:	
Priority Date: 31 May 2002	:	
Attorney Docket No.: 915-001.58	:	
For: METHOD AND ARRANGEMENT FOR	:	
POSITIONING A MOBILE RECEIVER	:	

Applicant's "Petition for Revival of an Application for Patent Abandoned Unintentionally Under 37 CFR 1.137(b)" filed with the national stage papers on 26 April 2005 is hereby **GRANTED** as follows:

The basic national fee, additional claim fees and petition fee have been paid. Applicant states that "[t]he entire delay in filing the required reply from the due date for the reply until the filing of a grantable petition under 37 CFR 1.137(b) was unintentional" as required by 37 CFR 1.137(b)(3). A terminal disclaimer is not required. Accordingly, all requirements under 37 CFR 1.137(b) have been satisfied.

A signed oath or declaration has not been provided.

This application is being forwarded to the United States Designated/Elected Office for further processing including mailing a Notification of Missing Requirements Under 35 U.S.C. 371 in the United States Designated/Elected Office (DO/EO/US) (Form PCT/DO/EO/905) indicating that a declaration in compliance with 37 CFR 1.497(a) and (b) and a surcharge fee are required.

James Thomson
Attorney Advisor
Office of PCT Legal Administration

Tel.: (571) 272-3302

UNITED STATES PATENT AND TRADEMARK OFFICE

Commissioner for Patents
United States Patent and Trademark Office
P.O. Box 1450
Alexandria, VA 22313-1450
www.uspto.gov

Nixon & Vanderhye, P.C.
901 North Glebe Road, 11th Floor
Arlington, VA 22203-1808

COPY MAILED

AUG 09 2007

OFFICE OF PETITIONS

In re Application of	:	
Wenxi Huang et al.	:	
Application No. 10/533,157	:	DECISION ON PETITION
Filed: December 7, 2005	:	TO WITHDRAW
Attorney Docket No. 3665-140	:	FROM RECORD
	:	

This is a decision on the Request to Withdraw as attorney or agent of record under 37 C.F.R. § 1.36(b), filed March 6, 2007.

The request is **NOT APPROVED** as moot.

A review of the file record indicates that the power of attorney to B. J. Sadoff and all attorneys/agents associated with customer number 23117 of record has been revoked by the assignee of the patent application on June 21, 2007. Accordingly, the request to withdraw under 37 C.F.R. § 1.36(b) is moot.

There is no outstanding office action at this time.

All future communications from the Office will continue to be directed to the below-listed address until otherwise notified by applicant.

Telephone inquires concerning this decision should be directed to Kimberly Inabinet at 571-272-4618.

Frances Hicks
Petitions Examiner
Office of Petitions

cc: Gibbons, P.C.
One Gateway Center
Newark, NJ 07102

UNITED STATES PATENT AND TRADEMARK OFFICE

UNITED STATES DEPARTMENT OF COMMERCE
United States Patent and Trademark Office
Address: COMMISSIONER FOR PATENTS
P.O. Box 1450
Alexandria, Virginia 22313-1450
www.uspto.gov

APPLICATION NUMBER	FILING OR 371 (c) DATE	FIRST NAMED APPLICANT	ATTY. DOCKET NO./TITLE
10/533,157	12/07/2005	Jean-Jacques Bourguignon	BJS-3665-140

CONFIRMATION NO. 5191

OC000000025125287

23117
NIXON & VANDERHYE, PC
901 NORTH GLEBE ROAD, 11TH FLOOR
ARLINGTON, VA 22203

Date Mailed: 08/01/2007

NOTICE REGARDING CHANGE OF POWER OF ATTORNEY

This is in response to the Power of Attorney filed 06/21/2007.

- The Power of Attorney to you in this application has been revoked by the assignee who has intervened as provided by 37 CFR 3.71. Future correspondence will be mailed to the new address of record(37 CFR 1.33).

Kimberly Gravinet

Office of Initial Patent Examination (571) 272-4000, or 1-800-PTO-9199

FORMER ATTORNEY/AGENT COPY

06 OCT 2005

UNITED STATES PATENT AND TRADEMARK OFFICE

Commissioner for Patents
United States Patent and Trademark Office
P.O. Box 1450
Alexandria, VA 22313-1450
www.uspto.gov

Corporate Patent Counsel
PHILLIPS ELECTRONICS NORTH AMERICA CORPORATION
P.O. Box 3001
Briarcliff Manor, NY 10510

In re Application of: GADDAM, Vassanth, R., et al. U.S. Application No.: 10/533,174 PCT No.: PCT/IB03/03815 International Filing Date: 05 September 2003 Priority Date: 06 September 2002 Attorney's Docket No.: US030092 For: PARAMETER ENCODING FOR AN IMPROVED ATSC DTV SYSTEM	DECISION ON PETITION FOR REVIVAL OF ABANDONED APPLICATION UNDER 37 CFR 1.137(b)

The petition for revival under 37 CFR 1.137(b) filed 29 April 2005 in the above-captioned application is hereby **GRANTED** as follows:

Applicants' statements, including the express statement that "the entire delay in filing the required reply from the due date for the required reply until the filing of a grantable petition under 37 CFR 1.137(b) was unintentional" satisfies the requirements of 37 CFR 1.137(b)(3).

Applicants have submitted the basic national fee petition fee, and the requirements of 37 CFR 1.137(b) have been satisfied. Therefore, the request to revive the application is granted as to the national stage in the United States of America. It is noted that the petition was accompanied by an executed declaration in compliance with 37 CFR 1.497.

This application is being returned to the National Stage Processing Division of the Office of PCT Operations for further processing in accordance with this decision. The date under 35 U.S.C. 371(c)(1), (c)(2), and (c)(4) is 29 April 2005.

Richard M. Ross
PCT Petitions Attorney
Office Of PCT Legal Administration
Telephone: (571) 272-3296
Facsimile: (571) 273-0459

#3

UNITED STATES PATENT AND TRADEMARK OFFICE

08 DEC 2005

Commissioner for Patents
United States Patent and Trademark Office
P.O. Box 1450
Alexandria, VA 22313-1450
www.uspto.gov

Isabelle A. S. Blundell
Legal Dept., 15 Pleasant St. Connector
Framingham, MA 01701-9322

In re Application of Coury, et al. Serial No.: 10/533,179 PCT No.: PCT/US03/20451 Int. Filing Date: 27 June 2003 Priority Date: 28 June 2002 Attorney's Docket No.: 5208PCT For: CONTROLLED RELEASE OF ANTI-ARRHYTHMIC AGENTS	DECISION ON PETITION UNDER 37 CFR 1.137(b)

This decision is responsive to the "PETITION FOR REVIVIAL OF AN INTERNATIONAL APPLICATION FOR PATENT DESIGNATING THE U.S. ABANDONED UNINTENTIONALLY UNDER 37 C.F.R. § 1.137(b)" filed 27 October 2005.

BACKGROUND

On 27 June 2003, applicants filed international application PCT/US03/20451, which claimed priority of an earlier U.S. provisional application filed 28 June 2002. Accordingly, the thirty-month period for paying the basic national fee for the national stage in the United States expired at midnight on 28 December 2004.

On 29 April 2005, applicants filed a transmittal letter for entry into the national stage in the United States. The transmittal letter was accompanied by, *inter alia*, a declaration, a bib data sheet and authorization to charge the deposit account for the basic national fee. These papers were assigned Application No. 10/533,179. Applicant also filed the current petition along with the petition fee.

DISCUSSION

A petition under 37 CFR 1.137(b) requesting that the application be revived on the grounds of unintentional delay must be filed promptly after the applicant becomes aware of the abandonment and such petition must be accompanied (1) by a statement that the "entire delay in filing the required reply from the due date for the reply until the filing of a grantable petition was unintentional," (2) by a proper reply, (3) by the petition fee required by law (37 CFR 1.17(m)), and (4) if the international filing date of the application is before June 8, 1995, any petition to

revive under 37 CFR [redacted](b) must be accompanied by a terminal [redacted]laimer and small entity fee of $55

A review of the application file reveals that with the present filing, the application satisfies the requirements of 35 U.S.C. 371.

CONCLUSION

The petition to revive the application abandoned under 35 U.S.C. 371(d) is **GRANTED** as to the National Stage in the United States of America.

This application is being forwarded to the national stage office for further processing in accordance with this decision. The 35 U.S.C. 371(c)(1), (c)(2) and (c)(4) date is **29 April 2005**.

Debra Brittingham
PCT Special Programs Examiner
Office of PCT Legal Administration

Richard Cole
PCT Legal Examiner
Office of PCT Legal Administration

Tel: (571) 272-3280
Fax: (571) 273-0459

UNITED STATES PATENT AND TRADEMARK OFFICE

Commissioner for Patents
United States Patent and Trademark Office
P.O. Box 1450
Alexandria, VA 22313-1450
www.uspto.gov

Paper No.

BRINKS HOFER GILSON & LIONE
P.O. BOX 10395
CHICAGO IL 60610

COPY MAILED

MAR 0 6 2009

OFFICE OF PETITIONS

In re Application of	:	
Nishino et al.	:	
Application No. 10/533,183	:	LETTER REGARDING
Filed: April 28, 2005	:	PATENT TERM ADJUSTMENT
Attorney Docket No. 5404/104	:	

This is in response to the "REQUEST FOR REVIEW OF PATENT TERM ADJUSTMENT," filed October 10, 2008. Pursuant to their duty of good faith and candor to the Office, applicants disclose that the initial determination of patent term adjustment pursuant to 35 U.S.C. 154(b) of 403 days may extend the term of the patent by too many days.

The request for review of the patent term adjustment is **GRANTED**.

The Office has updated the PAIR screen to reflect that the correct Patent Term Adjustment (PTA) determination at the time of the mailing of the Notice of Allowance is three hundred thirty-seven **(337)** days. A copy of the updated PAIR screen, showing the correct determination, is enclosed.

On September 5, 2008, the Office mailed the Determination of Patent Term Adjustment under 35 U.S.C. 154(b) in the above-identified application. The Notice stated that the patent term adjustment to date is 403 days. Applicants do not state a basis for their disclosure that the patent term adjustment may extend the term by too many days.

Nonetheless, a review of the application history confirms that the initial determination of patent term adjustment is incorrect. An additional period of reduction of 66 days should have been entered. 37 C.F.R. § 1.704(b) provides:

> With respect to the grounds for adjustment set forth in §§ 1.702(a) through (e), and in particular the ground of adjustment set forth in § 1.702(b), an applicant shall be deemed to have failed to engage in reasonable efforts to conclude processing or examination of an application for the cumulative total of any periods of time in excess of three months that are taken to reply to any notice or action by the Office making any rejection, objection, argument, or other request, measuring such three-month period from the date the notice or action was mailed or given to the applicant, in which case the period of adjustment set forth in § 1.703 shall be reduced by the number of days, if any, beginning on the day after the date that is three months after the date of mailing or transmission of the Office communication notifying the applicant of the rejection, objection, argument, or other request and ending on the date the reply was filed. The period, or shortened statutory period, for reply that is set in the Office action or notice has no effect on the three-month period set forth in this paragraph.

A final Office action was mailed on March 17, 2008. Applicants took until August 22, 2008, three months and 66 days later, to file an amendment in compliance with §1.113(c) in response. Accordingly, pursuant to 37 CFR 1.704(b), a period of reduction of 66 days should have been entered.

In view thereof, the correct patent term adjustment at the time of the mailing of the notice of allowance is three hundred thirty-seven (337) days.

As this letter was submitted as an advisement to the Office of an error in Applicants' favor, the Office will not assess the $200.00 fee under 37 CFR 1.18(e). The Office thanks Applicants for their good faith and candor in bringing this to the attention of the Office.

The application is being forwarded to the Office of Data Management for issuance of a patent. The patent term adjustment indicated on the patent (as shown on the Issue Notification mailed about three weeks prior to patent issuance) will include any additional adjustment accrued both for Office delay in issuing the patent more than four months after payment of the issue fee and satisfaction of all outstanding requirements, and

for the Office taking in excess of three years to issue the patent (to the extent that the three-year period does not overlap with periods already accorded).

Telephone inquiries specific to this matter should be directed to the undersigned at (571) 272-3219.

Nancy Johnson
Senior Petitions Attorney
Office of Petitions

Enclosure: Copy of REVISED PALM Screen

Day : Thursday

PALM INTRANET

Date: 3/5/2009
Time: 19:07:32

PTA Calculations for Application: 10/533183			
Application Filing Date:	04/28/2005	PTO Delay (PTO):	435
Issue Date of Patent:		Three Years:	0
Pre-Issue Petitions:	0	Applicant Delay (APPL):	32
Post-Issue Petitions:	0	Total PTA (days):	337
PTO Delay Adjustment:	-66		

File Contents History

Number	Date	Contents Description	PTO	APPL	START
52	03/05/2009	ADJUSTMENT OF PTA CALCULATION BY PTO		66	
38	09/05/2008	MAIL NOTICE OF ALLOWANCE			
37	09/03/2008	ISSUE REVISION COMPLETED			
36	09/03/2008	DOCUMENT VERIFICATION			
35	09/02/2008	NOTICE OF ALLOWANCE DATA VERIFICATION COMPLETED			
34	09/02/2008	CASE DOCKETED TO EXAMINER IN GAU			
33	09/02/2008	NOTICE OF ALLOWABILITY			
29	03/17/2008	MAIL FINAL REJECTION (PTOL - 326)			
28	03/08/2008	FINAL REJECTION			
27	02/06/2008	DATE FORWARDED TO EXAMINER			
26	01/07/2008	RESPONSE AFTER NON-FINAL ACTION		32	24
25	01/07/2008	REQUEST FOR EXTENSION OF TIME - GRANTED			
24	09/06/2007	MAIL NON-FINAL REJECTION	435		-1
23	09/04/2007	NON-FINAL REJECTION			
21	05/23/2005	INFORMATION DISCLOSURE STATEMENT CONSIDERED			
20	04/28/2005	INFORMATION DISCLOSURE STATEMENT CONSIDERED			
18	05/25/2005	INFORMATION DISCLOSURE STATEMENT (IDS) FILED			
17	01/13/2006	REQUEST FOR FOREIGN PRIORITY (PRIORITY PAPERS MAY BE INCLUDED)			
16	11/22/2005	IFW TSS PROCESSING BY TECH CENTER COMPLETE			
15	11/04/2005	CASE DOCKETED TO EXAMINER IN GAU			
		REQUEST FOR FOREIGN PRIORITY (PRIORITY			

14	04/28/2005	PAPERS MAY BE INCLUDED)			
13.7	05/23/2005	INFORMATION DISCLOSURE STATEMENT (IDS) FILED			
13	05/23/2005	INFORMATION DISCLOSURE STATEMENT (IDS) FILED			
12.7	04/28/2005	INFORMATION DISCLOSURE STATEMENT (IDS) FILED			
12	04/28/2005	INFORMATION DISCLOSURE STATEMENT (IDS) FILED			
11	04/28/2005	PRELIMINARY AMENDMENT			
10	09/29/2005	CLEARED BY OIPE CSR			
9	04/28/2005	371 COMPLETION DATE			
8	09/21/2005	APPLICATION RETURN FROM OIPE			
7	09/21/2005	NOTICE OF DO/EO ACCEPTANCE MAILED			
6	09/21/2005	APPLICATION RETURN TO OIPE			
4	09/14/2005	APPLICATION DISPATCHED FROM OIPE			
3	09/14/2005	NOTICE OF DO/EO ACCEPTANCE MAILED			
2	06/15/2005	PCT CLASSIFICATION			
1	04/28/2005	INITIAL EXAM TEAM NN			

Search Another: Application# Search

EXPLANATION OF PTA CALCULATION

EXPLANATION OF PTE CALCULATION

To go back, right click here and select Back. To go forward, right click here and select Forward. To refresh, right click here and select Refresh.

Back to OASIS | Home page

18 OCT 2005

#4

UNITED STATES PATENT AND TRADEMARK OFFICE

Commissioner for Patents
United States Patent and Trademark Office
P.O. Box 1450
Alexandria, VA 22313-1450
www.uspto.gov

ANDRUS SCEALES STARKE & SAWALL
100 East Wisconsin Avenue, Suite 1100
Milwaukee, WI 53202-4178

In re Application of	:	
CARTER, Rodney	:	
Application No.: 10/533,186	:	
PCT No.: PCT/GB03/03284	:	
Int. Filing Date: 29 July 2003	:	
Priority Date: 30 July 2002	:	**DECISION**
Attorney Docket No.: 1926-00104	:	
For: VAPOUR RECOVERY SYSTEMS IN A	:	
STORAGE TANK FILING PIPE	:	

Applicant's petition to revive under 37 CFR 1.137(b) filed with the national stage papers on 28 April 2005 is hereby **GRANTED** as follows:

Applicant submitted the basic national fee, surcharge fee and petition fee with the national stage papers. Applicant states that "[t]he entire delay in filing the required reply from the due date for the reply until the filing of a grantable petition under 37 CFR 1.137(b) was unintentional" as required by 37 CFR 1.137(b)(3). A terminal disclaimer is not required. Accordingly, all requirements under 37 CFR 1.137(b) have been satisfied.

A signed declaration in compliance with 37 CFR 1.497(a) and (b) has been provided.

Applicant has completed the requirements for acceptance under 35 U.S.C. 371(c). The application has an international filing date of 29 July 2003, under 35 U.S.C. 363 and a 35 U.S.C. 371(c)(1), (c)(2) and (c)(4) date of 28 April 2005.

This application is being forwarded to the National Stage Processing Division of the Office of PCT Operations for continued processing.

James Thomson

James Thomson
Attorney Advisor
Office of PCT Legal Administration

Tel.: (571) 272-3302

UNITED STATES PATENT AND TRADEMARK OFFICE

COMMISSIONER FOR PATENTS
UNITED STATES PATENT AND TRADEMARK OFFICE
P.O. BOX 1450
ALEXANDRIA, VA 22313-1450
www.uspto.gov

PATTERSON, THUENTE, SKAAR & CHRISTENSEN, P.A.
4800 IDS CENTER
80 SOUTH 8TH STREET
MINNEAPOLIS MN 55402-2100

COPY MAILED

MAR 1 7 2008

OFFICE OF PETITIONS

In re Application of	:	
Jahrmarkt, et al.	:	
Application No. 10/533,203	:	DECISION ON PETITION
Filed: April 28, 2005	:	
Attorney Docket No. 4091.07US01	:	

This is a decision on the petition under the unintentional provisions of 37 CFR 1.137(b), filed February 7, 2008, to revive the above-identified application.

The petition is **GRANTED**.

The application became abandoned for failure to reply in a timely manner to the non-final Office action mailed, June 29, 2007, which set a shortened statutory period for reply of three (3) months. No extensions of time under the provisions of 37 CFR 1.136(a) were obtained. Accordingly, the application became abandoned on September 30, 2007.

The petition satisfies the requirements of 37 CFR 1.137(b) in that petitioner has supplied (1) the required reply, (2) required petition fee and (3) a proper statement of unintentional delay.

Telephone inquiries concerning this decision should be directed to the undersigned at (571) 272-3205

This application is being referred to Technology Center AU 2851 for appropriate action by the Examiner in the normal course of business.

Alesia M. Brown
Petitions Attorney
Office of Petitions

12 JUL 2006

UNITED STATES PATENT AND TRADEMARK OFFICE

#9

COMMISSIONER FOR PATENTS
UNITED STATES PATENT AND TRADEMARK OFFICE
P.O. BOX 1450
ALEXANDRIA, VA 22313-1450
www.uspto.gov

VINSON & ELKINS, L.L.P.
1001 FANNIN STREET
2300 FIRST CITY TOWER
HOUSTON, TX 77002-6760

In re Application of GAO et al	:	
U.S. Application No.: 10/533,208	:	
PCT Application No.: PCT/US03/34207	:	
Int. Filing Date: 28 October 2003	:	DECISION
Priority Date Claimed: 28 October 2002	:	
Attorney Docket No.: INV850/4-11US/55006	:	
For: ARRAY OLIGOMER SYNTHESIS AND USE	:	

This is in response to applicant's "Petition Under CFR §1.47" filed 21 April 2006.

BACKGROUND

On 28 October 2003, applicant filed international application PCT/US03/34207, which claimed priority of an earlier United States application filed 28 October 2002. The thirty-month period for paying the basic national fee in the United States expired on 28 April 2005.

On 28 April 2005, applicant filed national stage papers in the United States Designated/Elected Office (DO/EO/US). The submission was accompanied by, *inter alia*, the basic national fee required by 35 U.S.C. 371(c)(1).

On 21 October 2005, the DO/EO/US mailed a Notification of Missing Requirements Under 35 U.S.C. 371 (Form PCT/DO/EO/905), which indicated that an oath or declaration in compliance with 37 CFR 1.497 must be filed.

On 21 April 2006, applicant filed the present petition under 37 CFR 1.47(a).

DISCUSSION

A petition under 37 CFR 1.47(a) must be accompanied by: (1) an oath or declaration by each applicant on his or her own behalf and on behalf of the nonsigning joint inventors, (2) factual proof that the missing joint inventors refuse to join in the application or cannot be

reached after diligent effort, (3) the fee set forth in §1.17(i), and (4) the last known addresses of the nonsigning joint inventors.

With regard to item (1) above, applicant has submitted declarations signed by the available inventors each on his/her own behalf and on behalf of the nonsigning inventors.

With regard to item (2) above, MPEP 409.03(d) states in relevant part,

> Where inability to find or reach a nonsigning inventor "after diligent effort" is the reason for filing under 37 CFR 1.47, an affidavit or declaration of facts should be submitted which fully describes the exact facts which are relied on to establish that a diligent effort was made. . . . The affidavit or declaration of facts must be signed, where at all possible, by a person having firsthand knowledge of the facts recited therein. Statements based on hearsay will not normally be accepted. Copies of documentary evidence such as certified mail return receipt, cover letter of instructions, telegrams, etc., that support a finding that the nonsigning inventor could not be found or reached should be made part of the affidavit or declaration. It is important that the affidavit or declaration contain statements of fact as opposed to conclusions.
>
> * * *
>
> Where a refusal to sign the application papers is alleged, the circumstances of this refusal must be specified in an affidavit or declaration by the person to whom the refusal was made. Statements by a party not present when an oral refusal is made will not be accepted.
>
> Before a refusal can be alleged, it must be demonstrated that a bona fide attempt was made to present a copy of the application papers (specification, including claims, drawings, and oath or declaration) to the nonsigning inventor for signature. A copy of the application papers should be sent to the last known address of the nonsigning inventor, or, if the nonsigning inventor is represented by counsel, to the address of the nonsigning inventor's attorney.
>
> When there is an express oral refusal, that fact along with the time and place of the refusal must be stated in the affidavit or declaration. When there is an express written refusal, a copy of the document evidencing that refusal must be made part of the affidavit or declaration.
>
> When it is concluded by the 37 CFR 1.47 applicant that a nonsigning inventor's conduct constitutes a refusal, all facts upon which that conclusion is based should be stated in the affidavit or declaration. If there is documentary evidence to support facts alleged in the affidavit or declaration, such evidence should be submitted. Whenever a nonsigning inventor gives a reason for refusing to sign the application oath or declaration, that reason should be stated in the affidavit or declaration.

<u>Inventor Qimin You</u>

The petition adequately demonstrates that a bona fide attempt was made to present a copy of the application papers to inventor You for signature. In particular, the application papers were sent to inventor You via electronic mail on 02 March 2006. Furthermore, the petition sufficiently establishes that inventor You refuses to sign. Specifically, inventor You's failure to respond to the messages dated 02 March 2006 and 19 April 2006 evidence a constructive refusal to cooperate. Thus, it can be concluded with reasonable certainty that inventor You refuses to join in the application.

Inventor Shi-Ying Cai

The petition does not adequately show that a diligent effort was made to locate inventor Cai. In particular, the petition includes documentary evidence of a single attempt to reach inventor Cai via postal mail. Although copies of various documents attached to the petition suggest that other attempts were made to find inventor Cai (e.g. electronic mail, internet directories, etc.), the petition does not include an affidavit explaining such attempts. The affidavit must be signed by the person with firsthand knowledge of such attempts. Furthermore, evidence of attempts to reach inventor Cai by telephone and through his/her former employer has not been furnished. Thus, it would not be reasonable to conclude at the present time that inventor Cai cannot be found.

With regard to item (3) above, applicant has provided the requisite petition fee.

With regard to item (4) above, the petition states the last known address of inventor Cai but does not state the last known address of inventor You.

CONCLUSION

For the reasons above, the petition under 37 CFR 1.47(a) is DISMISSED without prejudice.

If reconsideration on the merits of this petition is desired, a proper response must be filed within TWO (2) MONTHS from the mail date of this decision. Extensions of time are available under 37 CFR 1.136(a). Failure to timely file a proper response will result in abandonment of the application. Any reconsideration request should include a cover letter entitled "Renewed Petition Under 37 CFR 1.47(a)". No additional petition fee is required.

Please direct further correspondence with respect to this matter to Mail Stop PCT, Commissioner for Patents, Office of PCT Legal Administration, P.O. Box 1450, Alexandria, Virginia 22313-1450, with the contents of the letter marked to the attention of the Office of PCT Legal Administration.

Bryan Tung
PCT Legal Examiner
PCT Legal Office

Telephone: 571-272-3303
Facsimile: 571-273-0459

26 SEP 2006

#13

UNITED STATES PATENT AND TRADEMARK OFFICE

COMMISSIONER FOR PATENTS
UNITED STATES PATENT AND TRADEMARK OFFICE
P.O. BOX 1450
ALEXANDRIA, VA 22313-1450
www.uspto.gov

VINSON & ELKINS, L.L.P.
1001 FANNIN STREET
2300 FIRST CITY TOWER
HOUSTON, TX 77002-6760

In re Application of GAO et al	:	
U.S. Application No.: 10/533,208	:	
PCT Application No.: PCT/US03/34207	:	
Int. Filing Date: 28 October 2003	:	DECISION
Priority Date Claimed: 28 October 2002	:	
Attorney Docket No.: INV850/4-11US/55006	:	
For: ARRAY OLIGOMER SYNTHESIS AND USE	:	

This is in response to applicant's "Petition Under CFR §1.47" filed 21 April 2006.

BACKGROUND

On 28 October 2003, applicant filed international application PCT/US03/34207, which claimed priority of an earlier United States application filed 28 October 2002. The thirty-month period for paying the basic national fee in the United States expired on 28 April 2005.

On 28 April 2005, applicant filed national stage papers in the United States Designated/Elected Office (DO/EO/US). The submission was accompanied by, *inter alia*, the basic national fee required by 35 U.S.C. 371(c)(1).

On 21 October 2005, the DO/EO/US mailed a Notification of Missing Requirements Under 35 U.S.C. 371 (Form PCT/DO/EO/905), which indicated that an oath or declaration in compliance with 37 CFR 1.497 must be filed.

On 21 April 2006, applicant filed the present petition under 37 CFR 1.47(a).

On 12 July 2006, this Office mailed a decision dismissing the 21 April 2006 petition.

On 15 September 2006, the DO/EO/US mailed a Notification of Abandonment (Form PCT/DO/EO/909).

On 18 September 2006, applicant filed the present renewed petition under 37 CFR 1.47(a).

DISCUSSION

A petition under 37 CFR 1.47(a) must be accompanied by: (1) an oath or declaration by each applicant on his or her own behalf and on behalf of the nonsigning joint inventors, (2) factual proof that the missing joint inventors refuse to join in the application or cannot be reached after diligent effort, (3) the fee set forth in §1.17(i), and (4) the last known addresses of the nonsigning joint inventors.

Petitioner has previously satisfied items (1) and (3) above.

With regard to item (2) above, MPEP 409.03(d) states in relevant part,

> Where inability to find or reach a nonsigning inventor "after diligent effort" is the reason for filing under 37 CFR 1.47, an affidavit or declaration of facts should be submitted which fully describes the exact facts which are relied on to establish that a diligent effort was made. . . . The affidavit or declaration of facts must be signed, where at all possible, by a person having firsthand knowledge of the facts recited therein. Statements based on hearsay will not normally be accepted. Copies of documentary evidence such as certified mail return receipt, cover letter of instructions, telegrams, etc., that support a finding that the nonsigning inventor could not be found or reached should be made part of the affidavit or declaration. It is important that the affidavit or declaration contain statements of fact as opposed to conclusions.
>
> * * *
>
> Where a refusal to sign the application papers is alleged, the circumstances of this refusal must be specified in an affidavit or declaration by the person to whom the refusal was made. Statements by a party not present when an oral refusal is made will not be accepted.
>
> Before a refusal can be alleged, it must be demonstrated that a bona fide attempt was made to present a copy of the application papers (specification, including claims, drawings, and oath or declaration) to the nonsigning inventor for signature. A copy of the application papers should be sent to the last known address of the nonsigning inventor, or, if the nonsigning inventor is represented by counsel, to the address of the nonsigning inventor's attorney.
>
> When there is an express oral refusal, that fact along with the time and place of the refusal must be stated in the affidavit or declaration. When there is an express written refusal, a copy of the document evidencing that refusal must be made part of the affidavit or declaration.
>
> When it is concluded by the 37 CFR 1.47 applicant that a nonsigning inventor's conduct constitutes a refusal, all facts upon which that conclusion is based should be stated in the affidavit or declaration. If there is documentary evidence to support facts alleged in the affidavit or declaration, such evidence should be submitted. Whenever a nonsigning inventor gives a reason for refusing to sign the application oath or declaration, that reason should be stated in the affidavit or declaration.

Inventor Qimin You

Petitioner has previously established that inventor You refuses to join in the application.

Inventor Shi-Ying Cai

The renewed petition adequately demonstrates that a diligent effort was made to locate inventor Cai. Attempts to reach inventor Cai were made by postal mail, by searching directories, and by contacting Cai's former co-workers (see statements of Margaret Sampson and Bobbie Melder.) Thus, it can be concluded with reasonable certainty that inventor Cai cannot be found.

With regard to item (4) above, the petition states the last known addresses of the nonsigning inventors.

CONCLUSION

For the reasons above, the petition under 37 CFR 1.47(a) is GRANTED.

The Notification of Abandonment (Form PCT/DO/EO/909) mailed 15 September 2006 is hereby VACATED.

The application has an International Filing Date under 35 U.S.C. 363 of 28 October 2003, and a date under 35 U.S.C. 371(c)(1), (c)(2), and (c)(4) of 21 April 2006.

As set forth in 37 CFR 1.47(a), a notice of the filing of this application will be forwarded to the nonsigning inventors at the last known addresses of record and will be published in the *Official Gazette*.

This application is being forwarded to the United States Designated/Elected Office (DO/EO/US) for further processing in accordance with this decision.

Bryan Tung
PCT Legal Examiner
PCT Legal Office

Telephone: 571-272-3303
Facsimile: 571-273-0459

26 SEP 2006

UNITED STATES PATENT AND TRADEMARK OFFICE

COMMISSIONER FOR PATENTS
UNITED STATES PATENT AND TRADEMARK OFFICE
P.O. BOX 1450
ALEXANDRIA, VA 22313-1450
www.uspto.gov

Qimin You
Xeotron Corporation
8275 El Rio, Suite 130
Houston, TX 77054

In re Application of GAO et al
U.S. Application No.: 10/533,208
PCT Application No.: PCT/US03/34207
Int. Filing Date: 28 October 2003
Priority Date Claimed: 28 October 2002
For: ARRAY OLIGOMER SYNTHESIS AND USE

Dear Qimin You:

You are named as a joint inventor in the above-captioned United States national stage application, filed under the provisions of 37 CFR 1.47(a) and 35 U.S.C. 116. Should a patent be granted, you will be designated as an inventor.

As a named inventor, you are entitled to inspect any paper in the file wrapper of the application, order copies of all or any part thereof (at a prepaid cost set forth in 37 CFR 1.19) or to make your position of record in the application. Alternatively, you may arrange to do any of the preceding through a registered patent agent or attorney presenting written authorization from you. If you choose to join in the application, counsel of record (see below) would presumably assist you. Joining in the application would entail the filing of an appropriate oath or declaration by you pursuant to 37 CFR 1.63.

Bryan Tung
PCT Legal Examiner
PCT Legal Office
Telephone: 571-272-3303
Facsimile: 571-273-0459

VINSON & ELKINS, L.L.P.
1001 FANNIN STREET
2300 FIRST CITY TOWER
HOUSTON, TX 77002-6760
Attorney Docket No.: INV850/4-11US/55006

26 SEP 2006

UNITED STATES PATENT AND TRADEMARK OFFICE

COMMISSIONER FOR PATENTS
UNITED STATES PATENT AND TRADEMARK OFFICE
P.O. BOX 1450
ALEXANDRIA, VA 22313-1450
www.uspto.gov

Shi-Ying Cai
8282 Cambridge, Apt. 306
Houston, TX 77054

In re Application of GAO et al
U.S. Application No.: 10/533,208
PCT Application No.: PCT/US03/34207
Int. Filing Date: 28 October 2003
Priority Date Claimed: 28 October 2002
For: ARRAY OLIGOMER SYNTHESIS AND USE

Dear Shi-Ying Cai:

You are named as a joint inventor in the above-captioned United States national stage application, filed under the provisions of 37 CFR 1.47(a) and 35 U.S.C. 116. Should a patent be granted, you will be designated as an inventor.

As a named inventor, you are entitled to inspect any paper in the file wrapper of the application, order copies of all or any part thereof (at a prepaid cost set forth in 37 CFR 1.19) or to make your position of record in the application. Alternatively, you may arrange to do any of the preceding through a registered patent agent or attorney presenting written authorization from you. If you choose to join in the application, counsel of record (see below) would presumably assist you. Joining in the application would entail the filing of an appropriate oath or declaration by you pursuant to 37 CFR 1.63.

Bryan Tung
PCT Legal Examiner
PCT Legal Office
Telephone: 571-272-3303
Facsimile: 571-273-0459

VINSON & ELKINS, L.L.P.
1001 FANNIN STREET
2300 FIRST CITY TOWER
HOUSTON, TX 77002-6760
Attorney Docket No.: INV850/4-11US/55006

UNITED STATES PATENT AND TRADEMARK OFFICE

Commissioner for Patents
United States Patent and Trademark Office
P.O. Box 1450
Alexandria, VA 22313-1450
www.uspto.gov

VINSON & ELKINS, L.L.P.
1001 FANNIN STREET
2300 FIRST CITY TOWER
HOUSTON, TX 77002-6760

COPY MAILED

DEC 07 2007

OFFICE OF PETITIONS

In re Application of

GAO, Xiaolian et al.
Application No. 10/533,208
Filed: April 28, 2005
Attorney Docket No. **INV850/4-011US**

DECISION ON PETITION
TO WITHDRAW
FROM RECORD

This is a decision on the Request to Withdraw as attorney or agent of record under 37 C.F.R. § 1.36(b), filed August 15, 2007 and re-submitted on September 21, 2007.

The request is **NOT APPROVED**.

A grantable request to withdraw as attorney/agent of record must be signed by every attorney/agent seeking to withdraw or contain a clear indication that one attorney is signing on behalf of another/others. A request to withdraw will not be approved unless at least 30 (thirty) days would remain between the date of approval and the later of the expiration date of a time to file a response or the expiration date of the maximum time period which can be extended under 37 C.F.R. § 1.136(a).

In order to request or take action in a patent matter, the assignee must establish its ownership of the patent to the satisfaction of the Director. In this regard, a Statement under 37 CFR 3.73(b) must have either: (i) documentary evidence of a chain of title from the original owner to the assignee (*e.g.*, copy of an executed assignment), and a statement affirming that the documentary evidence of the chain of title from the original owner to the assignee was or concurrently is being submitted for recordation pursuant to § 3.11; or (ii) a statement specifying where documentary evidence of a chain of title from the original owner to the assignee is recorded in the assignment records of the Office (*e.g.*, reel and frame number).

All future communications from the Office will continue to be directed to the above-listed address until otherwise notified by applicant.

Telephone inquiries concerning this decision should be directed to Tredelle Jackson at 571-272- 2783.

Monica A. Graves
Petitions Examiner
Office of Petitions

cc: **INTELLEVATE LLC**
900 2ND AVENUE SOUTH, SUITE 1700
MINNEAPOLIS MN 55402

UNITED STATES PATENT AND TRADEMARK OFFICE

COMMISSIONER FOR PATENTS
UNITED STATES PATENT AND TRADEMARK OFFICE
P.O. BOX 1450
ALEXANDRIA, VA 22313-1450
www.uspto.gov

BAKER & MCKENZIE LLP
PATENT DEPARTMENT
2001 ROSS AVENUE
SUITE 2300
DALLAS TX 75201

COPY MAILED

SEP 1 2 2007

OFFICE OF PETITIONS

Applicant: Umarov, et al.
Application No. 10/533,216
International Filing Date: November 19, 2003
For: METHOD FOR CONVERTING THERMAL ENERGY INTO USEFUL WORK
Attorney Docket No: 55178294.1
Pub. No.: US 2006/0042248 A1
Pub. Date: March 2, 2006

This is a decision on the request for corrected patent applications publication under 37 CFR 1.221 (b), filed on May 1, 2006 for the above-identified application.

The request is DISMISSED.

Applicant requests that the application be republished because the patent application publication contains a material error whereby the name of the third inventor (Valery Mikhaylovich Petukhov) was omitted from the front page of the publication.

37 CFR 1.221 (b) is applicable "only **when the Office makes a material mistake which is apparent from Office records**.... Any request for a corrected publication or revised patent application publication other than provided as provided in paragraph (a) of this section must be filed within two months from the date of the patent application publication. This period is not extendable." A material mistake must affect the public's ability to appreciate the technical disclosure of the patent application publication, to determine the scope of the patent application publication, or to determine the scope of the provisional rights that an applicant may seek to enforce upon issuance of a patent. [1]

The error on the front page of the publication in the omission of the third inventor's name may be an Office error, but it is not a material Office error under 37 CFR 1.221. The omission of the inventor's name on the front page of the publication does not affect the understanding of the application. The mistake does not affect the public's ability to appreciate the technical disclosure of the patent application publication, or determine the scope of the patent application publication or determine the scope of the provisional rights that an applicant may seek to enforce upon issuance of a patent.

[1] Changes to Implement Eighteen-Month Publication of Patent Applications, 65 FR 57023, 57038 (Sept. 20, 2000), 1239, Off. Gaz. Pat. Office Notices 63, 75 (Oct. 10, 2000) (final rule).

The applicant is advised that a "request for republication of an application previously published" may be filed under 37 CFR 1.221(a). Such a request for republication "must include a copy of the application compliance with the Office's electronic filing system requirements and be accompanied by the publication fee set forth in § 1.18(d) and the processing fee set forth in § 1.17(i)." If the request for republication does not comply with the electronic filing system requirements, the republication will not take place and the publication fee set forth in § 1.18(d) will be refunded. The processing fee will be retained.

Any request for republication under 37 CFR 1.221(a), must be submitted via the EFS system as a "Pre-Grant Publication" and questions or request for reconsideration of the decision, should be addressed as follows:

By mail to: Mail Stop PGPUB
Commissioner for Patents
P.O. Box 1450
Alexandria, Va. 22313-1450

By facsimile: 571-273-8300

Inquiries relating to this matter may be directed to Mark Polutta at (571) 272-7709.

Mark O. Polutta
Senior Legal Advisor
Office of Patent Legal Administration
Office of the Deputy Commissioner
for Patent Examination Policy

UNITED STATES PATENT AND TRADEMARK OFFICE

UNITED STATES DEPARTMENT OF COMMERCE
United States Patent and Trademark Office
Address: COMMISSIONER FOR PATENTS
P.O. Box 1450
Alexandria, Virginia 22313-1450
www.uspto.gov

APPLICATION NO.	FILING DATE	FIRST NAMED INVENTOR	ATTORNEY DOCKET NO.	CONFIRMATION NO.
10/533,219	02/27/2006	Shinya Kobayashi	47106-5002	9491

55694 7590 11/19/2009
DRINKER BIDDLE & REATH (DC)
1500 K STREET, N.W.
SUITE 1100
WASHINGTON, DC 20005-1209

EXAMINER
FRANKLIN, RICHARD B

ART UNIT	PAPER NUMBER
2181	

MAIL DATE	DELIVERY MODE
11/19/2009	PAPER

Please find below and/or attached an Office communication concerning this application or proceeding.

The time period for reply, if any, is set in the attached communication.

UNITED STATES PATENT AND TRADEMARK OFFICE

Commissioner for Patents
United States Patent and Trademark Office
P.O. Box 1450
Alexandria, VA 22313-1450
www.uspto.gov

DRINKER BIDDLE & REATH (DC)
1500 K STREET, N.W.
SUITE 1100
WASHINGTON DC 20005-1209

In re Application of: KOBAYASHI et al.
Application No.10/533,219
Filed: Feb. 27, 2006
For: DETACHABLE DEVICE, CONTROL CIRCUIT, CONTROL CIRCUIT FIRMWARE PROGRAM, INFORMATION PROCESSING METHOD AND CIRCUIT DESIGN PATTERN IN CONTROL CIRCUIT, AND LOG-IN METHOD

DECISION ON REQUEST TO PARTICIPATE IN PATENT PROSECUTION HIGHWAY PILOT PROGRAM AND PETITION TO MAKE SPECIAL UNDER 37 CFR 1.102(d)

This is a decision on the request to participate in the Patent Prosecution Highway (PPH) pilot program and the petition under 37 CFR 1.102(d), filed November, 5, 2009 to make the above-identified application special.

The request and petition are **DENIED**.

A grantable request to participate in the PPH program and petition to make special require:

(1) The U.S. application is
(a) a Paris Convention application which either
(i) validly claims priority under 35 U.S.C. 119(a) and 37 CFR 1.55 to one or more applications filed in the JPO, or
(ii) validly claims priority to a PCT application that contains no priority claims,

Or

(b) a national stage application under the PCT (an application which entered the national stage in the U.S. from a PCT international application after compliance with 35 U.S.C. 371), which PCT application
(i) validly claims priority to an application filed in the JPO, or
(ii) validly claims priority to a PCT application that contains no priority claims, or
(iii) contains no priority claim,

Or

(c) a so-called bypass application filed under 35 U.S.C. 111 (a) which validly claims benefit under 35 U.S.C. 120 to a PCT application, which PCT application
(i) validly claims priority to an application filed in the JPO, or
(ii) validly claims priority to a PCT application that contains no priority claims, or
(iii) contains no priority claim.

Where the JPO application that contains the allowable/patentable claims is not the same application for which priority is claimed in the U.S. application, applicant must identify the relationship between the JPO application that contains the allowable/patentable claims and the JPO priority application claimed in the U.S. application.

(2) Applicant must submit a copy of:
a. The allowable/patentable claim(s) from the JPO application(s) or if a copy of the allowable/patentable claims is available via the Dossier Access System (DAS) applicant may request the USPTO obtain a copy from the DAS, however if the USPTO is unable to obtain a copy from the DAS the applicant will be required to submit a copy;
b. An English translation of the allowable/patentable claim(s) and
c. A statement that the English translation is accurate;

(3) Applicant must:
a. Ensure all the claims in the U.S. application must sufficiently correspond or be amended to sufficiently correspond to the allowable/patentable claim(s) in the JPO application(s) and
b. Submit a claims correspondence table in English;

(4) Examination of the U.S. application has not begun;

(5) Applicant must submit:
a. Documentation of prior office action:
i. a copy of the office action(s)just prior to the "Decision to Grant a Patent" from each of the JPO application(s) containing the allowable/patentable claim(s) or
ii. if the allowable/patentable claims(s) are from a "Notification of Reasons for Refusal" then the Notification of Reasons for Refusal or
iii. if the JPO application is a first action allowance then no office action from the JPO is necessary should be indicated on the request/petition form;

Further, if a copy of the documents from a or b above is available via the Dossier Access System (DAS) applicant may request the USPTO obtain a copy from the DAS, however if the USPTO is unable to obtain a copy from the DAS the applicant will be required to submit a copy; b. An English language translation of the JPO Office action from (5)(a)(i)-(ii) above c. A statement that the English translation is accurate;

(6) Applicant must submit:

a. An IDS listing the documents cited by the JPO examiner in the JPO office action (unless already submitted in this application)
b. Copies of the documents except U.S. patents or U.S. patent application publications (unless already submitted in this application);

(7) The required petition fee under 37 CFR 1.17(h).

The request to participate in the PPH pilot program and petition fail to include:

A. Item 3(a),(b). Specifically,

A claims correspondence table has not been submitted ensuring the claims of the U.S. application correspond to the allowable/patentable claim(s) in the JPO application(s).

Further,

In regards to Item 4: Examination must not have begun of the U.S. application requested in the petition prior to submission of the PPH petition. In this case, examination has begun prior to submission of the PPH petition. The examiner has issued a requirement for restriction/election on 07/27/2009 prior to the PPH petition filed 11/05/2009, therefore examination has begun on the present application and at least one requirement for requesting participation in the PPH Program has not been met.

The Petition is **DENIED**.

Telephone inquiries concerning this decision should be directed to Mano Padmanabhan at 571-272-4210.

All other inquiries concerning the examination or status of the application should be directed to Patent Application Information Retrieval (PAIR) system.

/Mano Padmanabhan/

Mano Padmanabhan
Quality Assurance Specialist, Technology Center 2100, Workgroup 2180
571-272-4210

#3

UNITED STATES PATENT and TRADEMARK OFFICE

14 DEC 2005

COMMISSIONER FOR PATENTS
UNITED STATES PATENT AND TRADEMARK OFFICE
P.O BOX 1450
ALEXANDRIA, VA 22313-1450
www.uspto.gov

SUGHRUE MION, PLLC
2100 Pennsylvania Avenue, N.W.
Washington, D.C. 20037-3213

In re Application of	DECISION ON
FOCKE et al	
PCT No.: PCT/EP03/011870	
Application No.: 10/533,221	
Int. Filing Date: 25 October 2003	PAPERS FILED
Priority Date: 31 October 2002	
Attorney's Docket No.: Q-87775	
For: DEVICE FOR PROCESSING TOBACCO DURING	
THE PRODUCTION OF CIGARETTES	UNDER 37 CFR 1.42

This is a decision on the declaration filed 29 April 2005, which has been treated as a request for status under 37 CFR 1.42.

BACKGROUND

On 29 April 2005, applicants filed a transmittal letter for entry into the national stage in the United States which was accompanied by, inter alia, the requisite basic national fee as required by 35 U.S.C. 371(c)(1), and an executed declaration as required by 35 U.S.C. 371(c)(4). The declaration, however, is signed by Doris Focke and Jurgen Focke as legal representatives of the inventor now deceased Heinz FOCKE.

DISCUSSION

The declaration is accepted under 37 CFR 1.42 because it includes the citizenship and mailing addresses of Doris Focke and Jurgen Focke (legal representatives) and of deceased inventor, Heinz FOCKE. Accordingly, applicants have satisfied the requirements under 37 CFR 1.42.

Thus, the requirements under 35 USC 371(c) are satisfied.

CONCLUSION

For the above reasons, the submission of the declaration under 37 CFR 1.42 is **ACCEPTED**.

The application is being returned to the United States Designated/Elected Office (DO/EO/US) for processing in accordance with this decision. The 35 U.S.C.§ 371(c)(1), (c)(2), and (c)(4) date of this application as **29 April 2005**.

Rafael Bacares
PCT Legal Examiner
PCT Legal Office
Tel: (571) 272-3276
Fax: (571) 273-0459

UNITED STATES PATENT AND TRADEMARK OFFICE

Commissioner for Patents
United States Patent and Trademark Office
P.O. Box 1450
Alexandria, VA 22313-1450
www.uspto.gov

MERCHANT & GOULD PC
P.O. BOX 2903
MINNEAPOLIS MN 55402-0903

COPY MAILED

JAN 10 2008

OFFICE OF PETITIONS

In re Application of	:	
Yukio Nishimura et al	:	
Application No. 10/533,223	:	DECISION GRANTING PETITION
Filed: April 29, 2005	:	UNDER 37 CFR 1.313(c)(2)
Attorney Docket No. 70020.0061USWO	:	

This is a decision on the petition under 37 CFR 1.313(c)(2), filed January 9, 2008, to withdraw the above-identified application from issue after payment of the issue fee.

The petition is **GRANTED**.

The above-identified application is withdrawn from issue for consideration of a submission under 37 CFR 1.114 (request for continued examination). *See* 37 CFR 1.313(c)(2).

Petitioner is advised that the issue fee paid on December 19, 2007 cannot be refunded. If, however, this application is again allowed, petitioner may request that it be applied towards the issue fee required by the new Notice of Allowance.[1]

Telephone inquiries should be directed to the undersigned at (571) 272-3208.

This application is being referred to Technology Center AU 1752 for processing of the request for continued examination under 37 CFR 1.114 and for consideration of the concurrently filed IDS.

Karen Creasy

Karen Creasy
Petitions Examiner
Office of Petitions

---

[1] *The request to apply the issue fee to the new Notice may be satisfied by completing and returning the new Part B – Fee(s) Transmittal Form (along with any balance due at the time of submission). Petitioner is advised that the Issue Fee Transmittal Form must be completed and timely submitted to avoid abandonment of the application.*

1 4 NOV 2007

UNITED STATES PATENT AND TRADEMARK OFFICE

Commissioner for Patents
United States Patent and Trademark Office
P.O. Box 1450
Alexandria, VA 22313-1450
www.uspto.gov

00826
ALSTON & BIRD LLP
Bank of America Plaza
101 South Tryon Street, Suite 4000
Charlotte, NC 28280-4000

In re Application of	:	
LARES *et al*	:	
U.S. Application No.: 10/533,225	:	
PCT No.: PCT/FI03/00868	:	
Int. Filing Date: 14 November 2003	:	**DECISION**
Priority Date: 27 November 2002	:	
Attorney Docket No.: 043965/291580	:	
For: BOARD PRODUCT AND METHOD OF MAKING THE SAME	:	

This decision is in response to the papers filed 05 September 2007 which are treated as a petition to withdraw the holding of abandonment. No fee is required.

BACKGROUND

On 03 March 2006, the United States Designated/Elected Office (DO/EO/US) mailed a Notification of Missing Requirements under 35 U.S.C. 371 (Form PCT/DO/EO/905) indicating that an oath or declaration in compliance with 37 CFR 1.497(a) and (b), additional claim fees and a $130.00 surcharge fee was required. A two-month time limit in which to respond was set with extensions of time available.

On 03 May 2006, applicants purportedly filed a response which contained, *inter alia*, an executed declaration and the $130.00 surcharge fee. The declaration was not located in the file.

On 05 September 2007, applicants filed the instant petition to withdraw the holding of abandonment which was accompanied by, *inter alia*, copies of the documents purportedly filed 03 May 2006 and a stamped postcard receipt for the 03 May 2006 documents.

DISCUSSION

It is first noted that the time limit to respond to the Form PCT/DO/EO/905 mailed 03 March 2006 has expired. Several papers filed 03 May 2006 were located in the file including the transmittal letter, specification and claims. Moreover, USPTO financial records indicate that a $130.00 surcharge fee was received. However, the declaration is <u>not</u> located in the file.

Accordingly, the above-captioned application is hereby **ABANDONED**.

MPEP § 503 lists procedures to ensure receipt of any paper filed in the USPTO. A postcard receipt which itemizes and properly identifies the papers which are being filed serves as *prima facie* evidence of receipt in the USPTO of all the items listed thereon on the date stamped thereon by the USPTO.

In this case, applicants have provided a copy of the date-stamped postcard receipt for documents submitted 03 May 2006. The postcard receipt records that among the papers received in the USPTO included a "Declaration and Power of Attorney (2 pages)." The postcard receipt is stamped "Rec'd PCT/PTO 03 MAY 2006" across its face. The U.S. application number, docket number and name of the applicant are all listed on the postcard receipt.

Accordingly, applicants have provided *prima facie* evidence that the declaration was received by the USPTO on 03 May 2006.

DECISION

For the reasons above, applicants' petition to withdraw the holding of abandonment is **GRANTED**.

The declaration originally filed 03 May 2006 is in compliance with 37 CFR 1.497(a) and (b).

This application is being forwarded to the Office of Patent Application Processing for continued processing.

James Thomson
Attorney Advisor
Office of PCT Legal Administration

Tel.: (571) 272-3302

UNITED STATES PATENT AND TRADEMARK OFFICE

Commissioner for Patents
United States Patent and Trademark Office
P.O. Box 1450
Alexandria, VA 22313-1450
www.uspto.gov

ADVANCED SYSTEMS AUTOMATION LTD.
BLK 25 KALLANG AVE
07-06 SINGAPORE
SINGAPORE 33941-6 SG
SINGAPORE

COPY MAILED
SEP 15 2008

In re Application of	:	
Jimmy Hwes Seng CHEW, et al	:	
Application No. 10/533,236	:	DECISION ON PETITION
Filed: October 18, 2005	:	
Attorney Docket No. 1007.P056US/GDL/AY	:	

This is a decision on the petition under 37 CFR 1.137(b), filed February 29, 2008, to revive the above-identified application.

The petition is **DISMISSED**.

The application became abandoned for failure to reply in a timely manner to the non-final Office action mailed, April 20, 2007, which set a shortened statutory period for reply of three (3) months. No extensions of time under the provisions of 37 CFR 1.136(a) were obtained. Accordingly, the application became abandoned on July 21, 2007.

A grantable petition under 37 CFR 1.137(b) must be accompanied by: (1) the required reply, unless previously filed; (2) the petition fee as set forth in 37 CFR 1.17(m); (3) a statement that the entire delay in filing the required reply from the due date for the reply until the filing of a grantable petition pursuant to 37 CFR 1.137(b) was unintentional; and (4) any terminal disclaimer (and fee as set forth in 37 CFR 1.20(d)) required by 37 CFR 1.137(c). Where there is a question as to whether either the abandonment or the delay in filing a petition under 37 CFR 1.137 was unintentional, the Commissioner may require additional information. *See* MPEP 711.03(c)(II)(C) and (D). The instant petition lacks items (1) and (3) above.

Turning first to item (3) above, the statement of unintentional delay is not considered at this time to be a properly submitted statement. In this regard, the petition containing the statement of unintentional delay is signed by Lim Kian Hock, who is Vice President of Advance Systems Automation Limited. Petitioner's attention is directed to 37 CFR 1.33(b), which states.

Amendments and other papers. Amendments and other papers, except for written assertions pursuant to § 1.27(c)(2)(ii) of this part, filed in the application must be signed by:

(1) A registered patent attorney or patent agent of record appointed in compliance with § 1.32(b);

(2) A registered patent attorney or patent agent not of record who acts in a representative capacity under the provisions of § 1.34;

(3) An assignee as provided for under § 3.71(b) of this chapter; or

(4) All of the applicants (§ 1.41(b)) for patent, unless there is an assignee of the entire interest and such assignee has taken action in the application in accordance with § 3.71 of this chapter.

An unsigned amendment (or other paper) or one not properly signed by a person having authority to prosecute the application is not entered. This applies, for instance, where the amendment (or other paper) is signed by only one of two applicants and the one signing has not been given a power of attorney by the other applicant.

Therefore, as the petition containing the statement of unintentional delay is not signed by **an assignee of the entire interest and has complied with the provisions of 37 CFR 3.73(b)**, the petition is considered to not contain a proper statement of unintentional delay. As it appears that Mr. Hock is signing on behalf of an assignee, compliance with 37 CFR 3.73(b) must be satisfied. In this regard, 37 CFR 3.73(b) provides:

(1) In order to request or take action in a patent or trademark matter, the assignee must establish its ownership of the patent or trademark property of paragraph (a) of this section to the satisfaction of the Director. The establishment of ownership by the assignee may be combined with the paper that requests or takes the action. Ownership is established by submitting to the Office a signed statement identifying the assignee, accompanied by either:

(i) Documentary evidence of a chain of title from the original owner to the assignee (e.g., copy of an executed assignment * * * For patent matters only, the submission of the documentary evidence must be accompanied by a statement affirming that the documentary evidence of the chain of title from the original owner to the assignee was or concurrently is being submitted for recordation pursuant to § 3.11; or

(ii) A statement specifying where documentary evidence of a chain of title from the original owner to the assignee is recorded in the assignment records of the Office (e.g., reel and frame number).

(2) The submission establishing ownership must show that the person signing the submission is a person authorized to act on behalf of the assignee by:

(i) Including a statement that the person signing the submission is authorized to act on behalf of the assignee; or
(ii) Being signed by a person having apparent authority to sign on behalf of the assignee, *e.g.*, an officer of the assignee.

(c) For patent matters only:

(1) Establishment of ownership by the assignee must be submitted prior to, or at the same time as, the paper requesting or taking action is submitted.
(2) If the submission under this section is by an assignee of less than the entire right, title and interest, such assignee must indicate the extent (by percentage) of its ownership interest, or the Office may refuse to accept the submission as an establishment of ownership.

In view of the above, and as it appears that Mr. Hock is signing the statement of unintentional delay as an assignee, then compliance with 37 CFR 3.73(b) must be satisfied. A blank certificate under 37 CFR 3.73(b) is enclosed with this decision for petitioner's convenience.

As to item (1) above, the reply is considered defective also for the reasons stated above (that the paper (reply) must be signed by a proper party; *i.e.*, all the inventors or an assignee of the entire interest and, if signed by an assignee of the entire interest, must satisfy the provisions of 37 CFR 3.73(b).

In sum, petitioner must submit a petition containing a statement of unintentional delay and reply (amendment) signed by all the inventors, **unless** petitioner herein is the assignee of the entire right, title and interest in the instant application, then compliance with 37 CFR 3.73(b) must be satisfied, which can be accomplished by completion of the enclosed certificate under 37 CFR 3.73(b).

Any request for reconsideration of this decision must be submitted within TWO (2) MONTHS from the mail date of this decision. Extensions of time under 37 CFR 1.136(a) are permitted. The reconsideration request should include a cover letter entitled "Renewed Petition under 37 CFR 1.137(b)." This is **not** a final agency action within the meaning of 5 U.S.C. § 704.

Further correspondence with respect to this matter should be addressed as follows:

By mail: Mail Stop PETITIONS
Commissioner for Patents
Post Office Box 1450
Alexandria, VA 22313-1450

By hand: Customer Service Window
Mail Stop Petitions
Randolph Building
401 Dulany Street
Alexandria, VA 22314

By fax: (703) 872-9306
ATTN: Office of Petitions

Any questions concerning this matter may be directed to the undersigned at (571) 272-6735.

Thurman Page
Petitions Examiner
Office of Petitions

Enclosure: Certificate under 37 CFR 3.73(b) and Privacy Act Statement

PTO/SB/96 (08-08)
Approved for use through 09/30/2008. OMB 0651-0031
U.S. Patent and Trademark Office; U.S. DEPARTMENT OF COMMERCE
Under the Paperwork Reduction Act of 1995, no persons are required to respond to a collection of information unless it displays a valid OMB control number.

STATEMENT UNDER 37 CFR 3.73(b)

Applicant/Patent Owner: _____

Application No./Patent No.: _____ Filed/Issue Date: _____

Entitled:

_____, a _____
(Name of Assignee) (Type of Assignee, e.g., corporation, partnership, university, government agency, etc.)

states that it is:

1. ☐ the assignee of the entire right, title, and interest; or

2. ☐ an assignee of less than the entire right, title and interest
(The extent (by percentage) of its ownership interest is _____%)

in the patent application/patent identified above by virtue of either:

A. ☐ An assignment from the inventor(s) of the patent application/patent identified above. The assignment was recorded in the United States Patent and Trademark Office at Reel _____, Frame _____, or for which a copy thereof is attached.

OR

B. ☐ A chain of title from the inventor(s), of the patent application/patent identified above, to the current assignee as follows:

1. From: _____ To: _____
The document was recorded in the United States Patent and Trademark Office at
Reel _____, Frame _____, or for which a copy thereof is attached.

2. From: _____ To: _____
The document was recorded in the United States Patent and Trademark Office at
Reel _____, Frame _____, or for which a copy thereof is attached.

3. From: _____ To: _____
The document was recorded in the United States Patent and Trademark Office at
Reel _____, Frame _____, or for which a copy thereof is attached.

☐ Additional documents in the chain of title are listed on a supplemental sheet.

☐ As required by 37 CFR 3.73(b)(1)(i), the documentary evidence of the chain of title from the original owner to the assignee was, or concurrently is being, submitted for recordation pursuant to 37 CFR 3.11.

[NOTE: A separate copy (*i.e.*, a true copy of the original assignment document(s)) must be submitted to Assignment Division in accordance with 37 CFR Part 3, to record the assignment in the records of the USPTO. See MPEP 302.08]

The undersigned (whose title is supplied below) is authorized to act on behalf of the assignee.

Signature	Date
Printed or Typed Name	Telephone Number
Title	

This collection of information is required by 37 CFR 3.73(b). The information is required to obtain or retain a benefit by the public which is to file (and by the USPTO to process) an application. Confidentiality is governed by 35 U.S.C. 122 and 37 CFR 1.11 and 1.14. This collection is estimated to take 12 minutes to complete, including gathering, preparing, and submitting the completed application form to the USPTO. Time will vary depending upon the individual case. Any comments on the amount of time you require to complete this form and/or suggestions for reducing this burden, should be sent to the Chief Information Officer, U.S. Patent and Trademark Office, U.S. Department of Commerce, P.O. Box 1450, Alexandria, VA 22313-1450. DO NOT SEND FEES OR COMPLETED FORMS TO THIS ADDRESS. **SEND TO: Commissioner for Patents, P.O. Box 1450, Alexandria, VA 22313-1450.**

If you need assistance in completing the form, call 1-800-PTO-9199 and select option 2.

Privacy Act Statement

The **Privacy Act of 1974 (P.L. 93-579)** requires that you be given certain information in connection with your submission of the attached form related to a patent application or patent. Accordingly, pursuant to the requirements of the Act, please be advised that: (1) the general authority for the collection of this information is 35 U.S.C. 2(b)(2); (2) furnishing of the information solicited is voluntary; and (3) the principal purpose for which the information is used by the U.S. Patent and Trademark Office is to process and/or examine your submission related to a patent application or patent. If you do not furnish the requested information, the U.S. Patent and Trademark Office may not be able to process and/or examine your submission, which may result in termination of proceedings or abandonment of the application or expiration of the patent.

The information provided by you in this form will be subject to the following routine uses:

1. The information on this form will be treated confidentially to the extent allowed under the Freedom of Information Act (5 U.S.C. 552) and the Privacy Act (5 U.S.C 552a). Records from this system of records may be disclosed to the Department of Justice to determine whether disclosure of these records is required by the Freedom of Information Act.
2. A record from this system of records may be disclosed, as a routine use, in the course of presenting evidence to a court, magistrate, or administrative tribunal, including disclosures to opposing counsel in the course of settlement negotiations.
3. A record in this system of records may be disclosed, as a routine use, to a Member of Congress submitting a request involving an individual, to whom the record pertains, when the individual has requested assistance from the Member with respect to the subject matter of the record.
4. A record in this system of records may be disclosed, as a routine use, to a contractor of the Agency having need for the information in order to perform a contract. Recipients of information shall be required to comply with the requirements of the Privacy Act of 1974, as amended, pursuant to 5 U.S.C. 552a(m).
5. A record related to an International Application filed under the Patent Cooperation Treaty in this system of records may be disclosed, as a routine use, to the International Bureau of the World Intellectual Property Organization, pursuant to the Patent Cooperation Treaty.
6. A record in this system of records may be disclosed, as a routine use, to another federal agency for purposes of National Security review (35 U.S.C. 181) and for review pursuant to the Atomic Energy Act (42 U.S.C. 218(c)).
7. A record from this system of records may be disclosed, as a routine use, to the Administrator, General Services, or his/her designee, during an inspection of records conducted by GSA as part of that agency's responsibility to recommend improvements in records management practices and programs, under authority of 44 U.S.C. 2904 and 2906. Such disclosure shall be made in accordance with the GSA regulations governing inspection of records for this purpose, and any other relevant (*i.e.*, GSA or Commerce) directive. Such disclosure shall not be used to make determinations about individuals.
8. A record from this system of records may be disclosed, as a routine use, to the public after either publication of the application pursuant to 35 U.S.C. 122(b) or issuance of a patent pursuant to 35 U.S.C. 151. Further, a record may be disclosed, subject to the limitations of 37 CFR 1.14, as a routine use, to the public if the record was filed in an application which became abandoned or in which the proceedings were terminated and which application is referenced by either a published application, an application open to public inspection or an issued patent.
9. A record from this system of records may be disclosed, as a routine use, to a Federal, State, or local law enforcement agency, if the USPTO becomes aware of a violation or potential violation of law or regulation.

UNITED STATES PATENT AND TRADEMARK OFFICE

Commissioner for Patents
United States Patent and Trademark Office
P.O. Box 1450
Alexandria, VA 22313-1450
www.uspto.gov

CONLEY ROSE, P.C.
DAVID A. ROSE
P.O. BOX 3267
HOUSTON, TX 77253-3267

COPY MAILED
DEC 2 3 2008

In re Application of	:	
Jimmy Hwee CHEW, et al	:	
Application No. 10/533,236	:	DECISION ON PETITION
Filed: October 18, 2005	:	
Docket No. 2085-05400	:	

This is a decision on the renewed petition under the unintentional provisions of 37 CFR 1.137(b), filed November 13, 2008, to revive the above-identified application.

The petition is **GRANTED**.

The application became abandoned for failure to reply in a timely manner to the non-final Office action mailed, April 20, 2007, which set a shortened statutory period for reply of three (3) months. No extensions of time under the provisions of 37 CFR 1.136(a) were obtained. Accordingly, the application became abandoned on July 21, 2007.

The petition satisfies the requirements of 37 CFR 1.137(b) in that petitioner has supplied (1) the reply in the form of an amendment, (2) the petition fee of $770; and (3) and the required statement of unintentional delay.

Telephone inquiries concerning this decision should be directed to Diane Goodwyn at (571) 272-6735.

This application is being referred to Technology Center AU 2829 for appropriate action by the Examiner in the normal course of business on the reply received February 29, 2008.

Ramesh Krishnamurthy

for Thurman Page
Petitions Examiner
Office of Petitions

PTO/SB/64a (10-08)
Approved for use through 11/30/2008. OMB 0651-0031
U.S. Patent and Trademark Office; U.S. DEPARTMENT OF COMMERCE
Under the Paperwork Reduction Act of 1995, no persons are required to respond to a collection of information unless it displays a valid OMB control number.

PETITION FOR REVIVAL OF AN APPLICATION FOR PATENT ABANDONED FOR FAILURE TO NOTIFY THE OFFICE OFA FOREIGN OR INTERNATIONAL FILING (37 CFR 1.137(f))	Docket Number (Optional) 2085-05400

First named inventor: Jimmy Hwee Seng CHEW

Application No.: 10/533,236 Art Unit: 2829

Filed: October 18, 2005 Examiner: J. M. Hollington

Title: Handler for Semiconductor Singulation and Method Therefor

Attention: Office of Petitions
Mail Stop Petition
Commissioner for Patents
P.O. Box 1450
Alexandria, VA 22313-1450
FAX (571) 273-8300

NOTE: If information or assistance is needed in completing this form, please contact Petitions Information at (571) 272-3282.

The above-identified application became abandoned pursuant to 35 U.S.C. 122(b)(2)(B)(iii) for failure to timely notify the Office of the filing of an application in a foreign country or under a multinational international treaty that requires publication of applications eighteen months after filing. The date of abandonment is the day after the expiration date of the forty-five (45) day period set in 35 U.S.C. 122(b)(2)(B)(iii).

PURSUANT TO 37 CFR 1.137(f), APPLICANT HEREBY PETITIONS FOR REVIVAL OF THIS APPLICATION UNDER 37 CFR 1.137(b)

1.Petition fee

☐ Small entity-fee $ _____ (37 CFR 1.17(m)). Applicant claims small entity status. See 37 CFR 1.27.

☐ Other than small entity – fee $ _____ (37 CFR 1.17(m))

2. Notice of Foreign or International Filing (35 U.S.C. 122(b)(2)(B)(iii) and 37 CFR 1.213(c))

Subsequent to the filing of the above-identified application, an application was filed in another country, or under a multinational international treaty (e.g., filed under the Patent Cooperation Treaty), that requires publication of applications eighteen months after the filing. The filing date of the subsequently filed foreign or international application is _____.

This collection of information is required by 37 CFR 1.137. The information is required to obtain or retain a benefit by the public which is to file (and by the USPTO to process) an application. Confidentiality is governed by 35 U.S.C. 122 and 37 CFR 1.11 and 1.14. This collection is estimated to take 1.0 hour to complete, including gathering, preparing, and submitting the completed application form to the USPTO. Time will vary depending upon the individual case. Any comments on the amount of time you require to complete this form and/or suggestions for reducing this burden, should be sent to the Chief Information Officer, U.S. Patent and Trademark Office, U.S. Department of Commerce, P.O. Box 1450, Alexandria, VA 22313-1450. DO NOT SEND FEES OR COMPLETED FORMS TO THIS ADDRESS. SEND TO: Mail Stop Petition, Commissioner for Patents, P.O. Box 1450, Alexandria, VA 22313-1450.

If you need assistance in completing the form, call 1-800-PTO-9199 and select option 2.

Under the Paperwork Reduction Act of 1995, no persons are required to respond to a collection of information unless it displays a valid OMB control number.

STATEMENT: The entire delay in filing the required notice of a foreign or international filing from the due date for the required notice until the filing of a grantable petition under 37 CFR 1.137(b) was unintentional. [NOTE: The United States Patent and Trademark Office may require additional information if there is a question as to whether either the abandonment or the delay in filing a petition under 37 CFR 1.137(b) was unintentional (MPEP 711.03(c), subsections (III)(C) and (D)).]

WARNING:

Petitioner/applicant is cautioned to avoid submitting personal information in documents filed in a patent application that may contribute to identity theft. Personal information such as social security numbers, bank account numbers, or credit card numbers (other than a check or credit card authorization form PTO-2038 submitted for payment purposes) is never required by the USPTO to support a petition or an application. If this type of personal information is included in documents submitted to the USPTO, petitioners/applicants should consider redacting such personal information from the documents before submitting them to the USPTO. Petitioner/applicant is advised that the record of a patent application is available to the public after publication of the application (unless a non-publication request in compliance with 37 CFR 1.213(a) is made in the application) or issuance of a patent. Furthermore, the record from an abandoned application may also be available to the public if the application is referenced in a published application or an issued patent (see 37 CFR 1.14). Checks and credit card authorization forms PTO-2038 submitted for payment purposes are not retained in the application file and therefore are not publicly available.

Signature	10 NOV 08 Date
Lim Kian Hock Typed or printed name	Registration Number, if applicable
Blk 25 Kallang Ave #07-06, Singapore Address	65-96730926 Telephone Number
Singapore 339416 Address	

Enclosures: ☐ Fee Payment

☐ Additional sheets containing statements establishing unintentional delay

☑ Other: Copy of form PTO/SB/64 preivously filed on February 29, 2008

CERTIFICATE OF MAILING OR TRANSMISSION [37 CFR 1.8(a)]

I hereby certify that this correspondence is being:

☐ Deposited with the United States Postal Service on the date shown below with sufficient postage as first class mail in an envelope addressed to: Mail Stop Petition, Commissioner for Patents, P. O. Box 1450, Alexandria, VA 22313-1450.

☐ Transmitted by facsimile on the date shown below to the United States Patent and Trademark Office at (571) 273-8300.

Date	Signature
	Typed or printed name of person signing certificate

PTO/SB/96 (10-08)
Approved for use through 11/30/2008. OMB 0651-0031
U.S. Patent and Trademark Office; U.S. DEPARTMENT OF COMMERCE
Under the Paperwork Reduction Act of 1995, no persons are required to respond to a collection of information unless it displays a valid OMB control number.

STATEMENT UNDER 37 CFR 3.73(b)

Applicant/Patent Owner: ADVANCED SYSTEMS AUTOMATION LIMITED

Application No./Patent No.: 10/533,236 Filed/Issue Date: October 18, 2005

Entitled: Handler for Semiconductor Singulation and Method Therefor

ADVANCED SYSTEMS AUTOMATION LIMITED, a Corporation
(Name of Assignee) (Type of Assignee, e.g., corporation, partnership, university, government agency, etc.)

states that it is:

1. [✓] the assignee of the entire right, title, and interest; or
2. [ ] an assignee of less than the entire right, title and interest (The extent (by percentage) of its ownership interest is _____ %)

in the patent application/patent identified above by virtue of either:

A. [✓] An assignment from the inventor(s) of the patent application/patent identified above. The assignment was recorded in the United States Patent and Trademark Office at Reel 017469, Frame 0843, or for which a copy therefore is attached.

OR

B. [ ] A chain of title from the inventor(s), of the patent application/patent identified above, to the current assignee as follows:

1. From: _____ To: _____
   The document was recorded in the United States Patent and Trademark Office at
   Reel _____, Frame _____, or for which a copy thereof is attached.
2. From: _____ To: _____
   The document was recorded in the United States Patent and Trademark Office at
   Reel _____, Frame _____, or for which a copy thereof is attached.
3. From: _____ To: _____
   The document was recorded in the United States Patent and Trademark Office at
   Reel _____, Frame _____, or for which a copy thereof is attached.

[ ] Additional documents in the chain of title are listed on a supplemental sheet.

[ ] As required by 37 CFR 3.73(b)(1)(i), the documentary evidence of the chain of title from the original owner to the assignee was, or concurrently is being, submitted for recordation pursuant to 37 CFR 3.11.

[NOTE: A separate copy (*i.e.*, a true copy of the original assignment document(s)) must be submitted to Assignment Division in accordance with 37 CFR Part 3, to record the assignment in the records of the USPTO. See MPEP 302.08]

The undersigned (whose title is supplied below) is authorized to act on behalf of the assignee.

Signature	10 NOV 08 Date
Dim Kian Hock Printed or Typed Name	65-96730926 Telephone Number
Title	

This collection of information is required by 37 CFR 3.73(b). The information is required to obtain or retain a benefit by the public which is to file (and by the USPTO to process) an application. Confidentiality is governed by 35 U.S.C. 122 and 37 CFR 1.11 and 1.14. This collection is estimated to take 12 minutes to complete, including gathering, preparing, and submitting the completed application form to the USPTO. Time will vary depending upon the individual case. Any comments on the amount of time you require to complete this form and/or suggestions for reducing this burden, should be sent to the Chief Information Officer, U.S. Patent and Trademark Office, U.S. Department of Commerce, P.O. Box 1450, Alexandria, VA 22313-1450. DO NOT SEND FEES OR COMPLETED FORMS TO THIS ADDRESS. SEND TO: Commissioner for Patents, P.O. Box 1450, Alexandria, VA 22313-1450.
If you need assistance in completing the form, call 1-800-PTO-9199 and select option 2.

UNITED STATES PATENT AND TRADEMARK OFFICE

Commissioner for Patents
United States Patent and Trademark Office
P.O. Box 1450
Alexandria, VA 22313-1450
www.uspto.gov

ADVANCED SYSTEMS AUTOMATION LTD.
BLK 25 KALLANG AVE
07-06 SINGAPORE
SINGAPORE 33941-6 SG
SINGAPORE

COPY MAILED
SEP 15 2008

In re Application of	:	
Jimmy Hwes Seng CHEW, et al	:	
Application No. 10/533,236	:	DECISION ON PETITION
Filed: October 18, 2005	:	
Attorney Docket No. 1007.P056US/GDL/AY	:	

This is a decision on the petition under 37 CFR 1.137(b), filed February 29, 2008, to revive the above-identified application.

The petition is **DISMISSED**.

The application became abandoned for failure to reply in a timely manner to the non-final Office action mailed, April 20, 2007, which set a shortened statutory period for reply of three (3) months. No extensions of time under the provisions of 37 CFR 1.136(a) were obtained. Accordingly, the application became abandoned on July 21, 2007.

A grantable petition under 37 CFR 1.137(b) must be accompanied by: (1) the required reply, unless previously filed; (2) the petition fee as set forth in 37 CFR 1.17(m); (3) a statement that the entire delay in filing the required reply from the due date for the reply until the filing of a grantable petition pursuant to 37 CFR 1.137(b) was unintentional; and (4) any terminal disclaimer (and fee as set forth in 37 CFR 1.20(d)) required by 37 CFR 1.137(c). Where there is a question as to whether either the abandonment or the delay in filing a petition under 37 CFR 1.137 was unintentional, the Commissioner may require additional information. *See* MPEP 711.03(c)(II)(C) and (D). The instant petition lacks items (1) and (3) above.

Turning first to item (3) above, the statement of unintentional delay is not considered at this time to be a properly submitted statement. In this regard, the petition containing the statement of unintentional delay is signed by Lim Kian Hock, who is Vice President of Advance Systems Automation Limited. Petitioner's attention is directed to 37 CFR 1.33(b), which states.

Amendments and other papers. Amendments and other papers, except for written assertions pursuant to § 1.27(c)(2)(ii) of this part, filed in the application must be signed by:

(1) A registered patent attorney or patent agent of record appointed in compliance with § 1.32(b);

(2) A registered patent attorney or patent agent not of record who acts in a representative capacity under the provisions of § 1.34;

(3) An assignee as provided for under § 3.71(b) of this chapter; or

(4) All of the applicants (§ 1.41(b)) for patent, unless there is an assignee of the entire interest and such assignee has taken action in the application in accordance with § 3.71 of this chapter.

An unsigned amendment (or other paper) or one not properly signed by a person having authority to prosecute the application is not entered. This applies, for instance, where the amendment (or other paper) is signed by only one of two applicants and the one signing has not been given a power of attorney by the other applicant.

Therefore, as the petition containing the statement of unintentional delay is not signed by **an assignee of the entire interest and has complied with the provisions of 37 CFR 3.73(b)**, the petition is considered to not contain a proper statement of unintentional delay. As it appears that Mr. Hock is signing on behalf of an assignee, compliance with 37 CFR 3.73(b) must be satisfied. In this regard, 37 CFR 3.73(b) provides:

(1) In order to request or take action in a patent or trademark matter, the assignee must establish its ownership of the patent or trademark property of paragraph (a) of this section to the satisfaction of the Director. The establishment of ownership by the assignee may be combined with the paper that requests or takes the action. Ownership is established by submitting to the Office a signed statement identifying the assignee, accompanied by either:

(i) Documentary evidence of a chain of title from the original owner to the assignee (e.g., copy of an executed assignment * * * For patent matters only, the submission of the documentary evidence must be accompanied by a statement affirming that the documentary evidence of the chain of title from the original owner to the assignee was or concurrently is being submitted for recordation pursuant to § 3.11; or

(ii) A statement specifying where documentary evidence of a chain of title from the original owner to the assignee is recorded in the assignment records of the Office (e.g., reel and frame number).

(2) The submission establishing ownership must show that the person signing the submission is a person authorized to act on behalf of the assignee by:

(i) Including a statement that the person signing the submission is authorized to act on behalf of the assignee; or

(ii) Being signed by a person having apparent authority to sign on behalf of the assignee, *e.g.*, an officer of the assignee.

(c) For patent matters only:

(1) Establishment of ownership by the assignee must be submitted prior to, or at the same time as, the paper requesting or taking action is submitted.

(2) If the submission under this section is by an assignee of less than the entire right, title and interest, such assignee must indicate the extent (by percentage) of its ownership interest, or the Office may refuse to accept the submission as an establishment of ownership.

In view of the above, and as it appears that Mr. Hock is signing the statement of unintentional delay as an assignee, then compliance with 37 CFR 3.73(b) must be satisfied. A blank certificate under 37 CFR 3.73(b) is enclosed with this decision for petitioner's convenience.

As to item (1) above, the reply is considered defective also for the reasons stated above (that the paper (reply) must be signed by a proper party; *i.e.*, all the inventors or an assignee of the entire interest and, if signed by an assignee of the entire interest, must satisfy the provisions of 37 CFR 3.73(b).

In sum, petitioner must submit a petition containing a statement of unintentional delay and reply (amendment) signed by all the inventors, **unless** petitioner herein is the assignee of the entire right, title and interest in the instant application, then compliance with 37 CFR 3.73(b) must be satisfied, which can be accomplished by completion of the enclosed certificate under 37 CFR 3.73(b).

Any request for reconsideration of this decision must be submitted within TWO (2) MONTHS from the mail date of this decision. Extensions of time under 37 CFR 1.136(a) are permitted. The reconsideration request should include a cover letter entitled "Renewed Petition under 37 CFR 1.137(b)." This is **not** a final agency action within the meaning of 5 U.S.C. § 704.

Further correspondence with respect to this matter should be addressed as follows:

By mail: Mail Stop PETITIONS
Commissioner for Patents
Post Office Box 1450
Alexandria, VA 22313-1450

By hand: Customer Service Window
Mail Stop Petitions
Randolph Building
401 Dulany Street
Alexandria, VA 22314

By fax: (703) 872-9306
ATTN: Office of Petitions

Any questions concerning this matter may be directed to the undersigned at (571) 272-6735.

Thurman Page
Petitions Examiner
Office of Petitions

Enclosure: Certificate under 37 CFR 3.73(b) and Privacy Act Statement

UNITED STATES PATENT AND TRADEMARK OFFICE

23 JUN 2006

#6

Commissioner for Patents
United States Patent and Trademark Office
P.O. Box 1450
Alexandria, VA 22313-1450
www.uspto.gov

SUGHRUE MION, PLLC
2100 PENNSYLVANIA AVENUE, N.W.
SUITE 800
WASHINGTON DC 20037

In re Application of	:	
FOCKE, Heinz et al.	:	
Application No.: 10/533,240	:	DECISION ON
PCT No.: PCT/EP03/11774	:	
Int. Filing Date: 24 October 2003	:	REQUEST
Priority Date: 05 November 2002	:	
Attorney's Docket No.: Q87659	:	UNDER 37 CFR 1.42
For: HINGE-LID PACKET FOR	:	
CIGARETTES	:	

This is a decision on applicants' 28 November 2005, submission of a declaration containing an indication that joint inventor Heinz Focke is deceased. The declaration has been treated as a request for status under 37 CFR 1.42.

BACKGROUND

On 24 October 2003, applicants filed international application PCT/EP03/11774, which claimed a priority date of 05 November 2002. A copy of the international application was transmitted to the Office by the International Bureau on 21 May 2004. The deadline for entry into the national stage in the United States was 05 May 2005.

On 29 April 2005, applicants filed a submission for entry into the national stage in the United States which was accompanied by, *inter alia*, the U.S. Basic National Fee.

On 28 September 2005, the Office mailed a Notification of Missing Requirements (Form PCT/DO/EO/905) indicating that an oath or declaration of the inventors and the surcharge for late filing of the oath or declaration were required.

On 28 November 2005, applicants submitted a declaration of the inventors, with an indication that joint inventor Heinz Focke was deceased and the surcharge for late filing of the oath or declaration.

DISCUSSION

Under 35 U.S.C. §117, legal representatives of deceased inventors may make application for patent upon compliance with the requirements and on the same terms and conditions applicable to the inventor. The "legal representative (executor, administrator, etc.) of the deceased inventor may make the necessary oath or declaration, and apply for and obtain the patent." 37 CFR 1.42.

The declaration complies with 37 CFR 1.497(a)-(b) and 37 CFR 1.42. The declaration lists the inventors and their citizenships and the legal representatives and the legal representatives' citizenships, residences and postal addresses. See 37 CFR 1.497.

CONCLUSION

For the above reasons, the request for status under 37 CFR 1.42 is **GRANTED**.

The application has a date of 28 November 2005 under 35 U.S.C. §371(c)(1), (c)(2) and (c)(4). This application is being forwarded to the National Stage Processing Division of the Office of the PCT Operations for continued processing.

Erin P. Thomson

Erin P. Thomson
Attorney Advisor
PCT Legal Administration

Telephone: (571) 272-3292
Facsimile: (571) 273-0459

UNITED STATES PATENT AND TRADEMARK OFFICE

UNITED STATES DEPARTMENT OF COMMERCE
United States Patent and Trademark Office
Address: COMMISSIONER FOR PATENTS
P.O. Box 1450
Alexandria, Virginia 22313-1450
www.uspto.gov

APPLICATION NO.	FILING DATE	FIRST NAMED INVENTOR	ATTORNEY DOCKET NO.	CONFIRMATION NO.
10/533,246	02/16/2006	Sujay Biswas	RLL-299US	8887

7590 02/13/2008

RANBAXY INC.
600 COLLEGE ROAD EAST
SUITE 2100
PRINCETON, NJ 08540

EXAMINER
CHANG, CELIA C

ART UNIT	PAPER NUMBER
1625	

MAIL DATE	DELIVERY MODE
02/13/2008	PAPER

DECISION DISMISSING PETITION UNDER 37 CFR 1.138(d)

The declaration of express abandonment will not be recognized

This is in response to the petition under 37 CFR 1.138(d), requesting for a refund of any previously paid search fee and excess claims fee in the above-identified application.

The petition is dismissed.

The express abandonment will **not** be recognized for the reason(s) indicated below:

1. ☐ The petition was not filed in sufficient time to permit the appropriate officials to recognize the abandonment before an examination has been made of the application. See 37 CFR 1.138(d).
2. ☐ The petition was not signed by a party authorized by 37 CFR 1.33(b)(1), (3) or (4).
3. ☒ The application is not an application filed under 35 U.S.C. 111(a) on or after December 8, 2004.
4. ☐ The petition for express abandonment under 1.138(d) is dismissed because the applicant did not pay any search fee and excess claims fees in the above-identified application.

Telephone inquiries ~~should be~~ directed to the Office of Data Management at (571) 272-4200.

Patent Publication Branch
Office of Data Management

FORM PET651D (Rev. 08/07)

UNITED STATES PATENT AND TRADEMARK OFFICE

Commissioner for Patents
United States Patent and Trademark Office
P.O. Box 1450
Alexandria, VA 22313-1450
www.uspto.gov

APPLICATION NUMBER	FILING/RECEIPT DATE	FIRST NAMED APPLICANT	ATTORNEY DOCKET NUMBER
10/533,255	04/29/2005	Gumtram Schnetz	SONN:071US

FULBRIGHT & JAWORSKI L.L.P.
600 CONGRESS AVE.
SUITE 2400
AUSTIN TX 78701

DATE MAILED: June 5, 2006

DECISION DISMISSING PETITION UNDER 37 CFR 1.138(d)
The declaration of express abandonment will not be recognized

This is in response to the petition under 37 CFR 1.138(d) filed on May 15, 2006, requesting for a refund of any previously paid search fee and excess claims fee in the above-identified application.

The petition is dismissed.

The express abandonment will **not** be recognized for the reason(s) indicated below:

~ 1. The petition was not filed in sufficient time to permit the appropriate officials to recognize the abandonment before an examination has been made of the application. See 37 CFR 1.138(d).

X 2. The application is not an application filed under 35 U.S.C. 111(a) on or after December 8, 2004.

~ 3. The petition was not signed by a party authorized by 37 CFR 1.33(b)(1), (3) or (4).

Any inquiries concerning this decision should be directed to the Pre-Grant Publication Division at (703) 605-4283.

Kaletus King
Pre-Grant Publication Division

0 6 JUN 2007

UNITED STATES PATENT AND TRADEMARK OFFICE

COMMISSIONER FOR PATENTS
UNITED STATES PATENT AND TRADEMARK OFFICE
P.O. BOX 1450
ALEXANDRIA, VA 22313-1450
www.uspto.gov

John James McGlew
MCGLEW AND TUTTLE,P.C.
Box 9227 Scarborough Station
Scarborough, New York 10510-9227

In re Application of	:	
Sturm, Thomas	:	
US Application No.: 10/533263	:	DECISION
PCT Application No.: PCT/EP04/07754	:	
Int. Filing Date: 14 July 2004	:	
Priority Date Claimed: 07 August 2003	:	
Attorney Docket No.: 71708	:	
For: CLAMPING DEVICE	:	

This is a decision on applicant's "Petition" filed in the United States Patent and Trademark Office on 10 May 2005. The petition is **GRANTED** to the extent indicated herein.

On 11 October 2005, the United States Patent and Trademark Office mailed the "NOTICATION OF ACCEPTANCE OF APPLICATION UNDER 35 U.S.C. 371 AND 37 CFR1.495 (Form PCT/DO/EO/903) indicating the above captioned international application was accepted in the US national phase on the basis of the English Translation filed on "5/10/05",i.e. the date of submission of the corrected translation. Accordingly, since the national stage application has been processed using the corrected translation no further action is required at this time.

The application is being returned to Examiner for an action on the merits in due course.

Newton Edwards
PCT Legal Administration Detailee
Office of PCT Legal Administration
Telephone: (571) 272-6094

Boris Milef
PCT Legal Examiner
Office of PCT Legal Administration

UNITED STATES PATENT AND TRADEMARK OFFICE

UNITED STATES DEPARTMENT OF COMMERCE
United States Patent and Trademark Office
Address: COMMISSIONER FOR PATENTS
P.O. Box 1450
Alexandria, Virginia 22313-1450
www.uspto.gov

Ronald R Santucci
Frommer Lawrence & Haug
745 Fifth Avenue
New York, NY 10151

Mail Date: 04/21/2010

Applicant	: Klaus Tank	: DECISION ON REQUEST FOR
Patent Number	: 7594553	: RECALCULATION of PATENT
Issue Date	: 09/29/2009	: TERM ADJUSTMENT IN VIEW
Appliction No	: 10/533,269	: OF WYETH AND NOTICE OF INTENT TO
Filed	: 12/19/2005	: ISSUE CERTIFICATE OF CORRECTION
		:

The Request for Recalculation is **GRANTED** to the extent indicated.

The patent term adjustment has been determined to be **269** days. The USPTO will *sua sponte* issue a certificate of correction reflecting the amount of PTA days determined by the recalculation.

Prior to the issuance of the certificate of correction, the USPTO will afford patentee an opportunity to be heard and request reconsideration. Accordingly, patentee has **one month or thirty (30) days**, whichever is longer, to file a request for reconsideration of this patent term adjustment calculation. See 35 U.S.C. 154(b)(3)(B)(ii) and 37 CFR 1.322(a)(4). No extensions of time will be granted under 37 CFR 1.136.

Patentee should use document code PET.OP if electronically filing a request for reconsideration of this patent term adjustment calculation. The patentee must also include the information required by 37 CFR 1.705(b)(2) and the fee required by 37 CFR 1.18(e). If patentee does not file a timely request for reconsideration of this patent term adjustment calculation including the information required by 37 CFR 1.705(b)(2) and the fee required by 37 CFR 1.18(e), the USPTO will issue a certificate of correction reflecting the PTA determination noted above.

Patentee should be aware that in order to preserve the right to review in the United States District Court for the District of Columbia of the USPTO patent term adjustment determination, patentee must ensure that he or she also take the steps required under 35 U.S.C. 154(b)(4)(A) in a timely manner. Nothing in the request for recalculation should be construed as providing an alternative time frame for commencing a civil action under 35 U.S.C. 154(b)(4)(A).

Any questions concerning this decision should be directed to the Office of Patent Legal Administration at 571-272-7702.

FF 4

UNITED STATES PATENT and TRADEMARK OFFICE

COMMISSIONER FOR PATENTS
UNITED STATES PATENT AND TRADEMARK OFFICE
P.O BOX 1450
ALEXANDRIA, VA 22313-1450
www.uspto.gov

14 DEC 2005

Freescale Semiconductor, Inc.
Law Department
7700 W. Parmer Lane
Mail Drop PL02
Austin, Texas 78729

In re Application of	:	DECISION ON
Mark L. SHAW	:	
Application No.: 10/533,271	:	
PCT No.: PCT/US03/07219	:	
Int. Filing Date: 12 February 2003	:	
Priority Date: 18 October 2002	:	PETITION UNDER
Attorney's Docket No.: SC12574ZC	:	
For: APPARATUS AND METHOD FOR POWER	:	
MANAGEMENT IN A TIRE PRESSURE	:	
MONITORING SYSTEM	:	37 CFR 1.137(b)

This decision is in response to applicants' "Petition For Revival Of An International Application For Patent Designating The U.S. Abandoned Unintentionally Under 37 CFR 1.137(b)," filed on 28 April 2005.

BACKGROUND

On 12 February 2003, this international application was filed, claiming an earliest priority date of 18 October 2002. The deadline for paying the basic national fee in the United States under 35 U.S.C. 371 and 37 CFR 1.495 was 18 April 2005. This international application became abandoned with respect to the United States at midnight on 18 April 2005 for failure to pay the required basic national fee.

On 28 April 2005, applicant filed the instant petition under 37 CFR 1.137(b) and Transmittal letter for entry into the national stage in the United States, which was accompanied by the basic national fee and the petition fee.

DISCUSSION

A grantable petition to revive an abandoned application under 37 CFR 1.137(b) must be accompanied by (1) the required reply, unless previously filed. In a nonprovisional application abandoned for failure to prosecute, the required reply may be met by the filing of a continuing application; (2) the petition fee as set forth in § 1.17(m); and (3) a statement that the entire delay in filing the required reply from the due date for the reply until the filing of a grantable petition pursuant to this paragraph was unintentional. The Commissioner may require additional information where there is a question whether the delay was unintentional; and (4) any terminal disclaimer (and fee as set forth in § 1.20 (d)) required pursuant to paragraph (c) of this section.

Petitioner has provided: (1) the proper reply by submitting the basic national filing fee, (2) the petition fee set forth in §1.17(m) and (3) the proper statement under 137(b)(3). In this application, no terminal disclaimer is required.

Accordingly, the petition is deemed to satisfy requirements (1), (2), (3), and (4) under 37 CFR 1.137(b).

DECISION

The petition under 37 CFR 1.137(b) is **GRANTED**.

This application is being returned to the United States Designated/Elected Office (DO/EO/US) for continued processing. The 35 USC 371(c)(1),(c)(2), and (c)(4) date of this application is **28 April 2005.**

Rafael Bacares
PCT Legal Examiner
PCT Legal Office
Telephone: (571) 272-3276
Facsimile: (571) 273-0459

UNITED STATES PATENT AND TRADEMARK OFFICE

Commissioner for Patents
United States Patent and Trademark Office
P.O. Box 1450
Alexandria, VA 22313-1450
www.uspto.gov

MOTOROLA, INC.
1303 EAST ALGONQUIN ROAD
IL01/3RD
SCHAUMBURG IL 60196

COPY MAILED

NOV 2 5 2007

OFFICE OF PETITIONS

In re Application of	:	
Simon Brusch et al.	:	
Application No. 10/533,281	:	ON PETITION
Filed: April 28, 2005	:	
Attorney Docket No. CE10056EP	:	

This is a decision on the petition under 37 CFR 1.137(b), filed October 24, 2007, to revive the above-identified application.

The petition is **GRANTED**.

The above-identified application became abandoned for failure to submit the issue fee in a timely manner in reply to the Notice of Allowance mailed July 03, 2007, which set a statutory period for reply of three (3) months. Accordingly, by operation of law, the above-identified application became abandoned on October 04, 2007.

The petition satisfies the conditions for revival pursuant to the provisions of 37 CFR 1.137(b) in that (1) the reply in the form of the issue fee; (2) the petition fee of $1,540; and (3) the required statement of unintentional delay have been received. Accordingly, the issue fee is accepted as having been unintentionally delayed.

Telephone inquiries concerning this decision should be directed to Carl Friedman at (571) 272-6842.

The application file is being referred to the Office of Patent Publication.

David Bucci
Petitions Examiner
Office of Petitions

UNITED STATES PATENT AND TRADEMARK OFFICE

Commissioner for Patents
United States Patent and Trademark Office
P.O. Box 1450
Alexandria, VA 22313-1450
www.uspto.gov

HEWLETT-PACKARD COMPANY
Intellectual Property Administration
3404 E. Harmony Road
Mail Stop 35
FORT COLLINS CO 80528

COPY MAILED

SEP 17 2009

OFFICE OF PETITIONS

In re Application of	:	
Paul Colfer, et al.	:	
Application No. 10/533,291	:	ON PETITION
Filed: February 7, 2006	:	
Attorney Docket No. 200316610-2	:	

This is a decision on the petition under the unintentional provisions of 37 CFR 1.137(b), filed July 29, 2009, to revive the above-identified application.

The petition is **GRANTED**.

The application became abandoned for failure to timely file a reply within the meaning of 37 CFR 1.113 to the final Office action of October 20, 2008. The proposed reply required for consideration of a petition to revive must be a Notice of Appeal (and appeal fee required by 37 CFR 41.20(b)(2), an amendment that *prima facie* places the application in condition for allowance, a Request for Continued Examination and submission (37 CFR 1.114), or the filing of a continuing application under 37 CFR 1.53(b). See MPEP 711.03(c)(III)(A)(2). No extensions of time pursuant to the provisions of 37 CFR 1.136(a) was obtained. Accordingly, the date of abandonment of this application is January 21, 2009. The Notice of Abandonment was mailed July 14, 2009.

The petition satisfies the requirements of 37 CFR 1.137(b) in that petitioner has supplied (1) the reply in the form of a Request for Continued Examination (RCE) and fee of $810, and the submission required by 37 CFR 1.114; (2) the petition fee of $1,620; and (3) a proper statement of unintentional delay.

It is not apparent whether the person signing the statement of unintentional delay was in a position to have firsthand or direct knowledge of the facts and circumstances of the delay at issue. Nevertheless, such statement is being treated as having been made as the result of a reasonable inquiry into the facts and circumstances of such delay. See 37 CFR 10.18(b) and Changes to Patent Practice and Procedure; Final Rule Notice, 62 Fed. Reg. 53131, 53178

(October 10, 1997), 1203 Off. Gaz. Pat. Office 63, 103 (October 21, 1997). In the event that such an inquiry has not been made, petitioner must make such an inquiry. If such inquiry results in the discovery that it is not correct that the entire delay in filing the required reply from the due date for the reply until the filing of a grantable petition pursuant to 37 CFR 1.137(b) was unintentional, petitioner must notify the Office.

There is no indication that the person signing the petition was ever given a power of attorney to prosecute the application.

Telephone inquiries concerning this decision should be directed to the undersigned at (571) 272-2991.

This application is being referred to Technology Center AU 2815 for processing of the RCE and for appropriate action by the Examiner in the normal course of business on the amendment submitted in accordance with 37 CFR 1.114.

Terri Johnson

Terri Johnson
Petitions Examiner
Office of Petitions

HEWLETT-PACKARD COMPANY
Intellectual Property Administration
P.O. Box 272400
Fort Collins, Colorado 80527-2400

PATENT APPLICATION

ATTORNEY DOCKET NO. 200316610-2

IN THE UNITED STATES PATENT AND TRADEMARK OFFICE

Inventor(s):	Colfer et al.	Confirmation No.:	6028
Application No.:	10/533,291	Examiner:	A. Ho
Filing Date:	02/07/2006	Group Art Unit:	2815

Title: ELECTRONIC COMPONENT WITH AT LEAST ONE N-OR P-DOPED PORTION

Mail Stop RCE
Commissioner For Patents
PO Box 1450
Alexandria, VA 22313-1450

REQUEST FOR CONTINUED EXAMINATION (RCE) 37 CFR 1.114

Subsection (b) of 35 U.S.C. 132, effective on May 29, 2000, provides for continued examination of a utiltity or plant application filed on or after June 8, 1995.
See The American Inventors Protection Act of 1999 (AIPA).

This is a Request for Continued Examination (RCE) under CFR 1.114 of the above-identified application.

NOTE: 37 CFR 1.114 is effective on May 20, 2000. If the above- application was filed prior to May 29, 2000, applicant may wish to consider filing a continued prosecution application (CPA) under CFR 1.53(d) (PTO/SB/29) instead of a RCE to be eligible for the patent term adjustment provisions of the AIPA. See Changes to Application Examination and Provisional Application Practice, Interim Rule, 65 Fed. Reg. 14865 (Mar. 20, 2000), 1233 off. Gaz. Pat. Office

Submission under 37 CFR 1.114

☐ Previously submitted

☐ Consider the amendment(s)/reply under 37 CFR 1.116 previously filed on _____.
(Any unentered amendment(s) referred to above will be entered).

☐ Consider the arguments in the Appeal Brief or Reply Brief prevously filed on _____.

☐ Other _____

☒ Enclosed

☒ Amendment/Reply

☐ Affidavit(s)/Declaration(s)

☐ Information Disclosure Statement (IDS)

☐ Other _____ 09/16/2009 CKHLOK 00000001 082025 10533291
01 FC:1801 810.00 DA

Miscellaneous

☐ Suspension of action is requested under 37 CFR 1.103(c) for a period of _____ months.
The fee for this Suspension is (37 CFR 1.17(i)) $130.00

☐ Other _____

☒ RCE filing fee $810.00

☐ A Petition for Extension of Time

☐ 1st Month $130 ☐ 2nd Month $490 ☐ 3rd Month $1110 ☐ 4th Month $1730

☒ Please charge to Deposit Account 08-2025 the sum of $ 810 . At any time during the pendency of this application, please charge any fees required or credit any over payment to Deposit Account 08-2025 pursuant to 37 CFR 1.25. Additionally please charge any fees to Deposit Account 08-2025 under 37 CFR 1.16 through 1.21 inclusive, and any other sections in Title 37 of the Code of Federal Regulations that my regulate fees.

Respectfully submitted,

Colfer et al.

By: /Edmond A. DeFrank/

Edmond A. DeFrank

Attorney/Agent for Applicant(s)

Reg No. : 37,814

Date : July 29, 2009

Telephone : 818.885.1575

UNITED STATES PATENT AND TRADEMARK OFFICE

Commissioner for Patents
United States Patent and Trademark Office
P.O. Box 1450
Alexandria, VA 22313-1450
www.uspto.gov

Morrison & Foerster LLP
1650 Tysons Boulevard
Suite 400
Mclean, VA 22102

COPY MAILED

NOV 15 2007

OFFICE OF PETITIONS

In re Application of	:	
Jorg Deister et al.	:	
Application No. 10/533,313	:	DECISION ON PETITION
Filed: April 29, 2005	:	TO WITHDRAW
Attorney Docket No. 2002P16958	:	FROM RECORD
	:	

This is a decision on the Request to Withdraw as attorney or agent of record under 37 C.F.R. § 1.36(b), filed June 28, 2007.

The request is **NOT APPROVED** as moot.

A review of the file record indicates that the power of attorney to Morrison & Foerster LLP has been revoked by the assignee of the patent application on August 20, 2007. Accordingly, the request to withdraw under 37 C.F.R. § 1.36(b) is moot.

All future communications from the Office will continue to be directed to the below-listed address until otherwise notified by applicant.

Telephone inquires concerning this decision should be directed to Terri Williams at 571-272-2991.

T. Williams

Terri Williams
Petitions Examiner
Office of Petitions

cc: **Lerner Greenberg Stemer LLP**
P.O. Box 2480
Hollywood, FL 33022-2480

UNITED STATES PATENT AND TRADEMARK OFFICE

Commissioner for Patents
United States Patent and Trademark Office
P.O. Box 1450
Alexandria, VA 22313-1450
www.uspto.gov

GIFFORD, KRASS, SPRINKLE,ANDERSON & CITKOWSKI, P.C
PO BOX 7021
TROY MI 48007-7021

COPY MAILED

JUN 16 2009

OFFICE OF PETITIONS

In re Application of	:	
Larsen et al.	:	
Application No. 10/533324	:	ON PETITION
Filing Date: 08/12/2005	:	
Attorney Docket Number: HOI-13202/16	:	

This is a decision on the petition to revive the above-identified application under the unintentional provisions of 37 CFR 1.137(b), filed May 5, 2009.

The petition is **GRANTED**.

The application became abandoned for failure to timely file a reply within the meaning of 37 CFR 1.113 to the final Office action of July 7, 2008. The proposed reply required for consideration of a petition to revive must be a Notice of Appeal (and appeal fee required by 37 CFR 41.20(b)(2), an amendment that *prima facie* places the application in condition for allowance, a Request for Continued Examination and submission (37 CFR 1.114), or the filing of a continuing application under 37 CFR 1.53(b). See MPEP 711.03(c)(III)(A)(2). No extensions of time pursuant to the provisions of 37 CFR 1.136(a) were obtained. Accordingly, the date of abandonment of this application is June 25, 2008.

The petition satisfies the requirements of 37 CFR 1.137(b) in that petitioner has supplied (1) the reply in the form of a Request for Continued Examination (RCE) and fee, and the submission required by 37 CFR 1.114 (filed January 9, 2009); (2) the petition fee; and (3) a proper statement of unintentional delay.

Telephone inquiries concerning this decision should be directed to the undersigned at (571) 272-3232.

This application is being referred to Technology Center AU 1634 for processing of the RCE and for appropriate action by the Examiner in the normal course of business on the amendment submitted in accordance with 37 CFR 1.114.

/Derek L. Woods/
Derek L. Woods
Attorney
Office of Petitions

UNITED STATES PATENT AND TRADEMARK OFFICE

UNITED STATES DEPARTMENT OF COMMERCE
United States Patent and Trademark Office
Address: COMMISSIONER FOR PATENTS
P.O. Box 1450
Alexandria, Virginia 22313-1450
www.uspto.gov

APPLICATION NO.	FILING DATE	FIRST NAMED INVENTOR	ATTORNEY DOCKET NO.	CONFIRMATION NO.
10/533,324	08/12/2005	Rasmus Dines Larsen	HOI-13202/16	5292

25006 7590 09/04/2009
GIFFORD, KRASS, SPRINKLE,ANDERSON & CITKOWSKI, P.C
PO BOX 7021
TROY, MI 48007-7021

EXAMINER
CROW, ROBERT THOMAS

ART UNIT	PAPER NUMBER
1634	

MAIL DATE	DELIVERY MODE
09/04/2009	PAPER

Please find below and/or attached an Office communication concerning this application or proceeding.

The time period for reply, if any, is set in the attached communication.

UNITED STATES PATENT AND TRADEMARK OFFICE

Commissioner for Patents
United States Patent and Trademark Office
P.O. Box 1450
Alexandria, VA 22313-1450
www.uspto.gov

GIFFORD, KRASS, SPRINKLE,ANDERSON & CITKOWSKI, P.C
PO BOX 7021
TROY MI 48007-7021

COPY MAILED

JUN 16 2009

OFFICE OF PETITIONS

ON PETITION

In re Application of
Larsen et al.
Application No. 10/533324
Filing Date: 08/12/2005
Attorney Docket Number: HOI-13202/16

This is a decision on the petition to revive the above-identified application under the unintentional provisions of 37 CFR 1.137(b), filed May 5, 2009.

The petition is **GRANTED.**

The application became abandoned for failure to timely file a reply within the meaning of 37 CFR 1.113 to the final Office action of July 7, 2008. The proposed reply required for consideration of a petition to revive must be a Notice of Appeal (and appeal fee required by 37 CFR 41.20(b)(2), an amendment that *prima facie* places the application in condition for allowance, a Request for Continued Examination and submission (37 CFR 1.114), or the filing of a continuing application under 37 CFR 1.53(b). See MPEP 711.03(c)(III)(A)(2). No extensions of time pursuant to the provisions of 37 CFR 1.136(a) were obtained. Accordingly, the date of abandonment of this application is June 25, 2008.

The petition satisfies the requirements of 37 CFR 1.137(b) in that petitioner has supplied (1) the reply in the form of a Request for Continued Examination (RCE) and fee, and the submission required by 37 CFR 1.114 (filed January 9, 2009); (2) the petition fee; and (3) a proper statement of unintentional delay.

Telephone inquiries concerning this decision should be directed to the undersigned at (571) 272-3232.

This application is being referred to Technology Center AU 1634 for processing of the RCE and for appropriate action by the Examiner in the normal course of business on the amendment submitted in accordance with 37 CFR 1.114.

/Derek L. Woods/
Derek L. Woods
Attorney
Office of Petitions

UNITED STATES PATENT AND TRADEMARK OFFICE

Commissioner for Patents
United States Patent and Trademark Office
P.O. Box 1450
Alexandria, VA 22313-1450
www.uspto.gov

GLAXOSMITHKLINE
CORPORATE INTELLECTUAL PROPERTY, MAI B482
FIVE MOORE DR., PO BOX 13398
RESEARCH TRIANGLE PARK, NC 27709-3398

MAILED

APR 27 2010

OFFICE OF PETITIONS

In re Application of	:	
Erwin PASBRIG, et *al.*	:	
Application No. 10/533,332	:	DECISION ON PETITION
Filed: May 2, 2005	:	UNDER 37 CFR 1.137(b)
Attorney Docket No. **PG4977USW**	:	

This is a decision on the petition under the unintentional provisions of 37 CFR 1.137(b), filed February 26, 2010, to revive the above-identified application.

The petition is **GRANTED**.

This application became abandoned for failure to timely pay the issue and publication fees on or before February 5, 2010, as required by the Notice of Allowance and Fee(s) Due, mailed November 5, 2009. Accordingly, the date of abandonment of this application is February 6, 2010.

The petition satisfies the requirements of 37 CFR 1.137(b) in that petitioner has supplied (1) the reply in the form of payment of the issue fee of $1510 and the publication fee of $300, (2) the petition fee of $1620; and (3) a proper statement of unintentional delay.

The application file does not indicate a change of address has been filed in this case, although the address given on the petition differs from the address of record. A change of address should be filed in this case in accordance with MPEP 601.03. A courtesy copy of this decision is being mailed to the address noted on the petition. However, until otherwise instructed, all future correspondence regarding this application will be mailed solely to the address of record.

Telephone inquiries concerning this decision should be directed to Monica A. Graves at (571) 272-7253.

This application is being referred to Office of Data Management for processing into a patent.

Thurman K. Page
Petitions Examiner
Office of Petitions

Cc: **DWIGHT S. WALKER**
FIVE MOORE DRIVE,P.O. BOX 13398
RESEARCH TRIANGLE PARK, NC 27709-3398

17 NOV 2006

UNITED STATES PATENT AND TRADEMARK OFFICE

Commissioner for Patents
United States Patent and Trademark Office
P.O. Box 1450
Alexandria, VA 22313-1450
www.uspto.gov

CALFEE HALTER & GRISWOLD, LLP
800 SUPERIOR AVENUE
SUITE 1400
CLEVELAND OH 44114

In re Application of: ROYCROFT, Terrence, James U.S. Application No.: 10/533,334 PCT No.: PCT/GB2003/004752 International Filing Date: 01 November 2003 Priority Date: 01 November 2002 Attorney's Docket No.: 30451/04013 For: AMPHIBIOUS VEHICLE WHEEL TRANSMISSION ARRANGEMENT	DECISION ON PETITION UNDER 37 CFR 1.47(b)

This decision is issued in response to the "Petition Under 37 CFR 1.47(b)" filed 10 October 2006. Petitioner submitted $130 as the petition fee; however, the applicable petition fee is $200. Deposit Account No. 03-0172 will be charged the additional $70 required to complete the petition fee.

BACKGROUND

On 01 November 2003, applicant filed international application PCT/GB2003/004752. The application claimed a priority date of 01 November 2002, and it designated the United States. On 13 May 2004, the International Bureau (IB) communicated a copy of the international application to the United States Patent and Trademark Office (USPTO). The deadline for submission of the basic national fee was thirty months from the priority date, i.e., 02 May 2005 (01 May 2005 was a Sunday).

On 02 May 2005, petitioner filed a Transmittal Letter for entry into the national stage in the United States accompanied by, among other materials, payment of the basic national fee.

On 06 April 2006, the United States Designated/Elected Office (DO/EO/US) mailed a Notification Of Missing Requirements (Form PCT/DO/EO/905) indicating that an executed oath or declaration acceptable under 37 CFR 1.497 and the surcharge for filing the declaration later than thirty months after the priority date were required.

On 10 October 2006, petitioner filed a response to the Notification Of Missing Requirements (with required four-month extension fee). The response included payment of the $65 small entity surcharge for filing the declaration later than thirty months after priority date, and the petition considered herein. The petition seeks acceptance of the application without the

signature of the sole inventor, whom petitioner states has refused to execute the application papers.

DISCUSSION

A grantable petition under 37 CFR 1.47(b) must be accompanied by: (1) the fee under 37 CFR 1.17; (2) factual proof that the inventor refuses to execute the application or cannot be reached after diligent effort; (3) a statement of the last known address of the non-signing inventor; (4) an oath or declaration by the 37 CFR 1.47(b) applicant on behalf of and as agent for the nonsigning inventor; (5) proof of proprietary interest in the application: and (6) a showing that such action is necessary to preserve the rights of the parties or to prevent irreparable damages. The present petition satisfies items (1), (3), and (6).

Regarding item (1), petitioner has Petitioner submitted $130 for the petition fee. Deposit Account No. 03-0172 will be charged the additional $70 required to complete the petition fee. Item (1) is therefore satisfied.

Regarding item (2), where it is asserted that the inventor has refused to execute the application papers, section 409.03(d) of the MPEP states that a "copy of the application papers should be sent to the last known address of the nonsigning inventor, or, if the nonsigning inventor is represented by counsel, to the address of the nonsigning inventor's attorney." The MPEP also requires "a statement of facts by the person who presented the inventor with the application papers and/or to whom the refusal was made." Here, petitioner has provided a declaration by Michael J. Giles, with accompanying exhibits. The exhibits include email correspondence from the non-signing inventor in which the inventor confirms that he has received a declaration and assignment form, and in which the inventor demands payment from the assignee before he will sign such documents. However, the petition does not provide a firsthand showing that a copy of the complete application papers (including description, claims, and drawings), accompanied by a request for signature, has been mailed to the non-signing inventor at his last known address, as required (the petition refers only to the declaration and assignment). Before item (2) can be considered satisfied, petitioner must provide firsthand evidence (with documentary support) confirming that a copy of the complete application papers, with a request for signature, has been mailed to the inventor at his last known address, and that the inventor has refused to provide the required signature. Based on the above, the present record does not satisfy item (2).

Regarding item (3), the petition includes an express statement of the last known address of the nonsigning inventor. Item (3) is satisfied.

Regarding item (4), the petition states that it includes an "executed Declaration under 37 CFR 1.64 consisting of Declaration presented to Inventor and added page executed by Assignees." However, no such document is present in the application file. Item (4) is therefore not satisfied on the present record.

Regarding item (5), section 409.03(f) of the MPEP states the following:

> When an application is deposited pursuant to 37 CFR 1.47(b), the 37 CFR 1.47(b) applicant must prove that: (A) the invention has been assigned to the applicant, or (B) the inventor has agreed in writing to assign the invention to the applicant, or (C) the applicant otherwise has sufficient proprietary interest in the subject matter to justify the filing of the application.

Petitioner here asserts that it has the required proprietary interest based on an assignment document executed by the non-signing inventor, a copy of which is included with the present petition. However, the MPEP states that, in such cases "[t]he assignment must clearly indicate that the invention described in the 37 CFR 1.47(b) application was assigned to the 37 CFR 1.47(b) applicant." Here, the assignment document lists numerous inventions, none of which on their face clearly correspond to the present application, and it was executed on 21 December 2000, nearly two years prior to the filing of the priority application claimed herein. Under these circumstances, it cannot be concluded that the assignment supplied by petitioner here clearly pertains to the invention described in the present application. Accordingly, the present submission does not adequately demonstrate the required proprietary interest of the 37 CFR 1.47(b) applicant. Item (5) is therefore not satisfied on the present record.[1]

Regarding item (6), the petition includes the required statement that granting of the present petition is necessary to preserve the rights of the 37 CFR 1.47(b) applicant. Item (6) is satisfied.

Based on the above, petitioner has failed to satisfy all the requirements for a grantable petition.

CONCLUSION

The petition under 37 CFR 1.47(b) is **DISMISSED** without prejudice.

If reconsideration on the merits of the petition is desired, a proper response must be filed within **TWO (2) MONTHS** of the mail date of the present decision. Any request for reconsideration should include a cover letter entitled "Renewed Petition Under 37 CFR 1.47(b)" and must include the materials required to satisfy items (2), (4), and (5) of a grantable petition, as discussed above and in the applicable sections of the MPEP.

Failure to provide a proper and timely response will result in abandonment of the application. Extensions of time are available under 37 CFR 1.136(a).

---

[1] See MPEP section 409.03(f) for the specific requirements for demonstrating a proprietary interest where the inventor has agreed to assign the invention, where the 37 CFR 1.47(b) applicant "otherwise has sufficient proprietary interest in the subject matter."

Please direct further correspondence with respect to this matter to Mail Stop PCT, Commissioner for Patents, P.O. Box 1450, Alexandria, Virginia 22313-1450, with the contents of the letter marked to the attention of the Office of PCT Legal Administration.

Richard M. Ross
Attorney Advisor
Office of PCT Legal Administration
Telephone: (571) 272-3296
Facsimile: (571) 273- 0459

DATE 10/19/07 APPLICATION NUMBER 10/533,337

DOC CODE Pet Dec. OSPE DOC DATE 10-19-07

DELIVER THE ATTACHED FIFLE/DOCUMENT TO THE TC SCANNING CENTER

CONTRACTOR: THE ATTACHED FILE/DOCUMENT MUST BE INDEXED AND SCANNED INTO IFW WITHIN 8 WORK HOURS; UPLOADING OF THE SCANNED IMAGES SHOULD OCCUR NO LATER THAN 16 WORK HOURS FOLLOWING RECEIPT OF THIS REQUEST

AFTER SCANNING, ORIGINAL DOCUMENTS SHOULD BE BOXED IN ACCORDANCE WITH INSTRUCTIONS

UNITED STATES PATENT AND TRADEMARK OFFICE

Commissioner for Patents
United States Patent and Trademark Office
P.O. Box 1450
Alexandria, VA 22313-1450
www.uspto.gov

19 OCT 2007

CALFEE HALTER & GRISWOLD, LLP
800 SUPERIOR AVENUE
SUITE 1400
CLEVELAND OH 44114

In re Application of:	:	
ROYCROFT, Terence, James	:	DECISION ON PETITION UNDER
U.S. Application No.: 10/533,334	:	37 CFR 1.182 AND RENEWED
PCT No.: PCT/GB2003/004752	:	PETITION UNDER
International Filing Date: 01 November 2003	:	37 CFR 1.47(b)
Priority Date: 01 November 2002	:	
Attorney's Docket No.: 30451/04013	:	
For: AMPHIBIOUS VEHICLE WHEEL	:	
TRANSMISSION ARRANGEMENT	:	

This decision is issued in response to the petition under 37 CFR 1.182 filed herein on 11 October 2007 and the renewed petition under 37 CFR 1.47(b) filed on 18 May 2007. Applicant has submitted the petition fee required under 37 CFR 1.182; no additional petition fee is required with respect to the renewed petition under 37 CFR 1.47(b).

BACKGROUND

In a decision mailed by this Office on 17 November 2006, applicant's petition under 37 CFR 1.47(b) for acceptance of the application without the signature of the applicant was dismissed without prejudice for failure to satisfy the requirements of a grantable petition.

On 18 May 2007, applicants filed the renewed petition under 37 CFR 1.47(b) considered herein, with accompanying materials (including executed declaration and four-month extension fee). The transmittal letter included with the materials filed 18 May 2007 misidentified the application number as 10/553,334. Accordingly these materials were placed in unrelated application file 10/553,334.

On 11 October 2007, applicant filed the petition under 37 CFR 1.182 considered herein. The petition requests that the materials filed on 18 May 2007 be treated as having been filed in the present application on 18 May 2007.

DISCUSSION

1. Petition Under 37 CFR 1.182

The petition under 37 CFR 1.182 requests that the materials filed on 18 May 2007 under the transmittal letter directed to application number 10/553,334 be treated as having been filed in

the present application, 10/533,334, on 18 May 2007, as necessary to avoid abandonment of the present application.

The petition was accompanied by the required petition fee, and a review of the filed documents confirms that the proper application number was listed thereon, specifically on the front page of the renewed petition and on the executed declaration.

Applicant's submission satisfies the requirements for a grantable petition under 37 CFR 1.182. The renewed petition under 37 CFR 1.47(b) and accompanying materials will be treated as having been filed herein on 18 May 2007.

2. Renewed Petition Under 37 CFR 1.47(b)

The renewed petition under 37 CFR 1.47(b) includes a declaration executed by the previously non-signing inventor Terence James ROYCROFT.

Accordingly, applicant has now submitted a declaration in compliance with 37 CFR 1.497, and the petition under 37 CFR 1.47(b) seeking acceptance of the declaration without the applicant's signature is moot.

CONCLUSION

The petition under 37 CFR 1.182 is **GRANTED**.

The renewed petition under 37 CFR 1.47(b) and accompanying materials, including the executed declaration and extension fee, will be treated as having been filed in the present application on 18 May 2007.

Based on the filing of a declaration executed by the previously non-signing inventor, the renewed petition under 37 CFR 1.47(b) is dismissed as **MOOT.**

It is noted that, pursuant to applicant's request, the spelling of the inventor's first name in USPTO records has been corrected to Terence (rather than Terrence), the spelling of record for the inventor's name as set forth in the published international application.

This application is being forwarded to the National Stage Processing Branch of the PCT Operations Division for further processing in accord with this decision. The date under 35 U.S.C. 371(c)(1), (c)(2), and (c)(4) is 18 May 2007.

Richard M. Ross
Attorney Advisor
Office of PCT Legal Administration
Telephone: (571) 272-3296
Facsimile: (571) 273- 0459

24 MAR 2006

#4

UNITED STATES PATENT AND TRADEMARK OFFICE

Commissioner for Patents
United States Patent and Trademark Office
P.O. Box 1450
Alexandria, VA 22313-1450
www.uspto.gov

Knobbe, Martens, Olson & Bear, LLP
2040 Main Street
14th Floor
Irvine, CA 92614

In re Application of	:	
KANG, Seong-Jin	:	
Application No.: 10/533,352	:	
PCT No.: PCT/KR03/01862	:	DECISION ON PETITION
Int. Filing Date: 09 September 2003	:	UNDER 37 CFR 1.137(b)
Priority Date: 11 September 2002	:	
Attorney Docket No.: OHPAR6.001APC	:	
For: A COMPACT-TYPE DISCHARGE LAMP	:	

The petition to revive under 37 CFR 1.137(b) filed 29 April 2005 in the above-captioned application is hereby **GRANTED** as follows:

Applicant's statement that "the entire delay in filing the required reply from the due date for the reply until the filing of a grantable petition under 37 CFR 1.137(b) was unintentional" meets the requirements of 37 CFR 1.137(b)(3).

A review of the application file reveals that applicant has submitted the basic national fee and the requirements of 37 CFR 1.137(b) have been satisfied. Therefore, the request to revive the application abandoned under 35 U.S.C. 371(d) is granted as to the National stage in the United States of America.

This application is being returned to the United States Designated/Elected Office for processing in accordance with this decision.

Anthony Smith

Anthony Smith
Attorney-Advisor
Office of PCT Legal Administration
Tel: (571) 272-3298
Fax: (571) 273-0459

UNITED STATES PATENT AND TRADEMARK OFFICE

Commissioner for Patents
United States Patent and Trademark Office
P.O. Box 1450
Alexandria, VA 22313-1450
www.uspto.gov

ROPES & GRAY LLP
PATENT DOCKETING 39/361
1211 AVENUE OF THE AMERICAS
NEW YORK, NY 10036-8704

COPY MAILED

SEP 19 2008

OFFICE OF PETITIONS

In re Application of	:	
Mark PINES, et al	:	
Application No. 10/533,371	:	DECISION ON PETITION
Filed: June 1, 2006	:	TO WITHDRAW
Attorney Docket No. COLL/019		FROM RECORD
	:	

This is a decision on the Request to Withdraw as attorney or agent of record under 37 C.F.R. § 1.36(b), filed July 17, 2008.

The request is **NOT APPROVED**.

A grantable request to withdraw as attorney/agent of record must be signed by every attorney/agent seeking to withdraw or contain a clear indication that one attorney is signing on behalf of another/others. The Office requires the practitioner(s) requesting withdrawal to certify that he, she, or they have: (1) given reasonable notice to the client, prior to the expiration of the response period, that the practitioner(s) intends to withdraw from employment; (2) delivered to the client or a duly authorized representative of the client all papers and property (including funds) to which the client is entitled; and (3) notified the client of any responses that may be due and the time frame within which the client must respond, pursuant 37 CFR 10.40(c).

The request cannot be approved because the attorneys of record were not appointed by customer number.

All future communications from the Office will continue to be directed to the above-listed address until otherwise notified by applicant.

Telephone inquiries concerning this decision should be directed to the undersigned at 571-272-6735.

Diane Goodwyn
Petitions Examiner
Office of Petitions

Cc: MARK PINES
COLLGARD BIOPHARMACEUTICALS LTD.
15 GONEN STREET, KIRYAT MATALON,
PO BOX 7779
PETACH TIKVA 49170
ISRAEL

UNITED STATES PATENT AND TRADEMARK OFFICE

Commissioner for Patents
United States Patent and Trademark Office
P.O. Box 1450
Alexandria, VA 22313-1450
www.uspto.gov

BARBARA A. RUSKINS
ROPES & GRAY LLP,
1211 AVENUE OF THE AMERICAS
NEW YORK NY 10036

COPY MAILED

DEC 0 8 2008

In re Application of	:	
Mark PINES, et al	:	
Application No. 10/533,371	:	DECISION ON PETITION
Filed: June 1, 2006	:	TO WITHDRAW
Attorney Docket No.	:	FROM RECORD
	:	

This is a decision on the Request to Withdraw as attorney or agent of record under 37 C.F.R. § 1.36(b), filed October 2, 2008.

The request is **APPROVED**.

A grantable request to withdraw as attorney/agent of record must be signed by every attorney/agent seeking to withdraw or contain a clear indication that one attorney is signing on behalf of another/others. The Office requires the practitioner(s) requesting withdrawal to certify that he, she, or they have: (1) given reasonable notice to the client, prior to the expiration of the response period, that the practitioner(s) intends to withdraw from employment; (2) delivered to the client or a duly authorized representative of the client all papers and property (including funds) to which the client is entitled; and (3) notified the client of any responses that may be due and the time frame within which the client must respond, pursuant 37 CFR 10.40(c).

The request was signed by Barbara A. Ruskin on behalf of all the attorneys of record.

All the attorneys of record have been withdrawn.

Applicant is reminded that there is no attorney of record at this time.

The request to change the correspondence address of record is not acceptable as the requested correspondence address is not that of: (1) the first named signing inventor; or (2) an intervening assignee of the entire interest under 37 C.F.R 3.71. All future communications from the Office will be directed to the first signing inventor at the first copied address below until otherwise properly notified by the applicant.

Telephone inquiries concerning this decision should be directed to the undersigned at 571-272-6735.

Diane Goodwyn
Petitions Examiner
Office of Petitions

cc: ARNON NAGLER
46 SDEROT HERZL
74381 JERUSALEM
ISRAEL

cc: MARK PINES
BIOPHARMACEUTICALS LTD.,
15 GONEN STREET,
KIRYAT MATALON, P.O. BOX 7779
PETACH TIKVA 49170
ISRAEL

UNITED STATES PATENT AND TRADEMARK OFFICE

COMMISSIONER FOR PATENTS
UNITED STATES PATENT AND TRADEMARK OFFICE
P.O. BOX 1450
ALEXANDRIA, VA 22313-1450
www.uspto.gov

PATTERSON, THUENTE, SKAAR AND CHRISTENSEN, PA
4800 IDS CENTER
80 SOUTH 8TH STREET
MINNEAPOLIS, MINNESOTA 55402-2100

COPY MAILED

MAY 21 2008

OFFICE OF PETITIONS

Applicant: Chow et al.
Appl. No.: 10/533,376
Filing Date: April 29, 2005
Title: LANDING GEAR
Attorney Docket No.: 2733.30US01
Pub. No.: US 2006-902775-A1
Pub. Date: May 18, 2006

This is in response to the "Request for Corrected Patent Application Publication under 37 CFR 1.221(a)," which was filed on March 21, 2007.

The request is DISMISSED.

The instant request is that the application be republished with the correct specification and claims.

37 CFR 1.221(a) requires "a copy of the application in compliance with the Office electronic filing system requirements and be accompanied by the publication fee set forth in § 1.18(d) and the processing fee set forth in § 1.17(i)". If the request for republication does not comply with the electronic filing system requirements, the republication will not take place and the publication fee set forth in § 1.18(d) will be refunded. The processing fee will be retained.

The applicant did not supply a copy of the application in compliance with the Office electronic filing system, as required by 37 CFR 1.221(a).

Applicant authorized payment of the publication fee set forth in § 1.18(d) ($300) and the processing fee set forth in § 1.17(i)($130.00). The publication fee ($300.00) and the $130.00 processing fee set forth in 37 CFR 1.17(i) have been charged to applicants' deposit account Deposit account 16-0631. The publication fee ($300.00) will be refunded to applicants' deposit account Deposit account 16-0631.

Any request for republication under 37 CFR 1.221(a), must be submitted via the EFS system, as a "Pre-Grant Publication" and questions or request for reconsideration of the decision, should be addressed as follows:

By mail to: Mail Stop PGPUB
Commissioner for Patents
P.O. Box 1450
Alexandria, Va. 22313-1450

By facsimile: 571-273-8300

Inquiries relating to this matter may be directed to Mark O. Polutta at (571) 272-7709.

Mark O. Polutta
Office of Patent Legal Administration
Office of the Deputy Commissioner
for Patent Examination Policy

PATENT APPLICATION

IN THE UNITED STATES PATENT AND TRADEMARK OFFICE

In re the application of: Attorney Docket No.: 2733.30US01

Leung Choi Chow et al. Confirmation No.: 4620

Application No.: 10/533,376 Examiner: Unknown

Filed: April 29, 2005 Group Art Unit: 3643

For: LANDING GEAR

PETITION UNDER 37 CFR §1.221 FOR
REPUBLICATION OF PATENT APPLICATION

Mail Stop PGPUB
Commissioner for Patents
P.O. Box 1450
Alexandria, VA 22313-1450

Sir:

Pursuant to 37 C.F.R. § 1.221(a), republication of this application is hereby respectfully requested. The date of publication was May 18, 2006. The patent application publication contains material errors. The material errors which are apparent from the Office records are as follows:

STATEMENT OF FACTS

Publication No.: US-2006-0102775-A1 currently corresponds to the PCT specification and claims that were filed with this application. The incorrectly published PCT application includes 23 claims and lacks the distinct specification elements that were included in the correct application.

The publication should reflect the specification and claims that were filed with the United States Patent and Trademark Office on April 29, 2005. The correct application contains distinct specification elements including a "Background of the Invention" and "Summary of the

Adjustment date: 05/21/2008 CKHLOK
03/21/2007 INTEFSW 00002040 160631 10533376
02 FC:1504 300.00 CR

Invention." The correct application also contains only 20 claims. A copy of the correct application is enclosed with this petition.

This petition is being filed more than two months after the date of the patent application publication. Therefore, authorization is given to debit Deposit Account No. 16-0631 in the amount of $430.00 to cover the Publication Fee required under 37 CFR §1.18(d) and the Petition Fee required under 37 CFR §1.17(i).

Please credit or debit Deposit Account No. 16-0631 as needed to ensure consideration of the disclosed information.

Respectfully submitted,

Douglas J. Christensen
Registration No. 35,480

Customer No. 24113
Patterson, Thuente, Skaar & Christensen, P.A.
4800 IDS Center
80 South 8th Street
Minneapolis, Minnesota 55402-2100
Telephone: (612) 349-3001

Please grant any extension of time necessary for entry; charge any fee due to Deposit Account No. 16-0631.

CERTIFICATE OF ELECTRONIC FILING

I hereby certify that this paper is being transmitted electronically to the U.S. Patent and Trademark Office Electronic Filing Website on the date shown below.

March 21, 2007
Date of Deposit

Douglas J. Christensen

UNITED STATES PATENT & TRADEMARK OFFICE
Washington, D.C. 20231

REQUEST FOR PATENT FEE REFUND

1 Date of Request: 5/22/08 | 2 Serial/Patent # 10/533,376

	3 Please refund the following fee(s):	4 PAPER NUMBER	5 DATE FILED	6 AMOUNT
	Filing			$
	Amendment			$
	Extension of Time			$
	Notice of Appeal/Appeal			$
	Petition			$ 300
	Issue			$
	Cert of Correction/Terminal Disc.			$
	Maintenance			$
	Assignment			$
	Other			$

7 TOTAL AMOUNT OF REFUND $

8 TO BE REFUNDED BY:

- [ ] Treasury Check
- [ ] Credit Deposit A/C #:

9 1 6 -- 0 6 3 1

10 REASON:

- [ ] Overpayment
- [ ] Duplicate Payment
- [x] No Fee Due (Explanation):

No Fee Due

11 REFUND REQUESTED BY: M. Polath

TYPED/PRINTED NAME: M. K. Polath TITLE: Legal Advis

SIGNATURE: [signature] PHONE: 2-7709

OFFICE:

****

THIS SPACE RESERVED FOR FINANCE USE ONLY:

APPROVED: [signature] DATE: 5/21/08

Instructions for completion of this form appear on the back. After completion, attach white and yellow copies to the official file and mail or hand-carry to:

Office of Finance
Refund Branch
Crystal Park One, Room 802B

FORM PTO 1577
(01/90)

UNITED STATES PATENT AND TRADEMARK OFFICE

COMMISSIONER FOR PATENTS
UNITED STATES PATENT AND TRADEMARK OFFICE
P.O. BOX 1450
ALEXANDRIA, VA 22313-1450
www.uspto.gov

PATTERSON, THUENTE, SKAAR &
CHRISTENSEN, P.A.
4800 IDS CENTER
80 SOUTH 8TH STREET
MINNEAPOLIS MN 55402-2100

COPY MAILED
SEP 28 2009
OFFICE OF PETITIONS

In re Patent No. 7,484,688	:	
Chow et al.	:	DECISION ON
Application No. 10/533,376	:	REQUEST FOR
Issue Date: February 3, 2009	:	RECONSIDERATION OF
Filed: April 29, 2005	:	PATENT TERM ADJUSTMENT
Attorney Docket No.	:	UNDER 37 CFR 1.705
2733.30US01	:	

This is in response to the PETITION UNDER 37 C.F.R. § 1.705(d), filed on April 3, 2009. Patentee requests that the determination of patent term adjustment be corrected from six hundred forty-two (642) days to nine hundred eighteen (918) days.

The request for reconsideration of patent term adjustment is **GRANTED TO THE EXTENT INDICATED HEREIN**.

The patent term adjustment indicated in the patent is to be corrected by issuance of a certificate of correction showing a revised Patent Term Adjustment of six hundred thirty-nine (639) days.

Patentees are given THIRTY (30) DAYS or ONE (1) MONTH, whichever is longer, from the mail date of this decision to respond to this decision. No extensions of time will be granted under § 1.136.

BACKGROUND

This application fulfilled the requirements of 35 U.S.C. 371 on May 2, 2005.[1] On September 25, 2008, the Office mailed a notice

[1] The priority date in this application is November 1, 2002. Applicants did not file an express request under 35 U.S.C 371(f). Accordingly, the date which is 30 months from the priority date is May 1, 2005. As May 1, 2005 fell on a Sunday, the commencement date is shifted to May 2, 2005. See PCT

that the initial determination of patent term adjustment under 35 U.S.C. 154(b) to date is 642 days[2]. On February 3, 2009, the application matured into U.S. Patent No. 7,484,688, with a revised patent term adjustment of 642 days. The Office determined that the 277 days of Office delay pursuant to 35 U.S.C. 154(b)(1)(B) and 37 CFR 1.702(b)[3,4] overlaps with the 642 days of Office delay pursuant to 35 U.S.C. 154(b)(1)(A) and 37 CFR 1.702(a)(1)[5] accorded prior to the issuance of the patent. As such, the Office allowed only entry of the adjustment of 642 days. No additional days of patent term adjustment were entered at issuance under the three-year pendency provision. Given the applicant delay of no days, the patent issued with a revised patent term adjustment of 642 days.

Rule 80.5. Additionally, as applicant completed all 35 U.S.C. 371 requirements on filing the national stage prior to commencement, the completion date is also shifted to May 2, 2005.

[2] 642 days of Office delay was reduced by 0 days of applicant delay for a patent term adjustment of 642 days. No request for reconsideration of this initial determination was filed.

[3] Pursuant to 35 U.S.C. 154(b)(1)(B), 37 CFR 1.702(b) provides, in pertinent part, that:

Failure to issue a patent within three years of the actual filing date of the application. Subject to the provisions of 35 U.S.C. 154(b) and this subpart, the term of an original patent shall be adjusted if the issuance of the patent was delayed due to the failure of the Office to issue a patent within three years after the date on which the application was filed under 35 U.S.C. 111(a) or the national stage commenced under 35 U.S.C. 371(b) or (f) in an international application.

[4] As of the issuance of the patent on February 3, 2009, the application was pending three years and 277 days.

[5] 37 CFR § 1.702, provides grounds for adjustment of patent term due to examination delay under the Patent Term Guarantee Act of 1999 (original applications, other than designs, filed on or after May 29, 2000).

> (a) Failure to take certain actions within specified time frames. Subject to the provisions of 35 U.S.C. 154(b) and this subpart, the term of an original patent shall be adjusted if the issuance of the patent was delayed due to the failure of the Office to:
>
> (1) Mail at least one of a notification under 35 U.S.C. 132 or a notice of allowance under 35 U.S.C. 151 not later than fourteen months after the date on which the application was filed under 35 U.S.C. 111(a) or fulfilled the requirements of 35 U.S.C. 371 in an international application;

On April 3, 2009, patentee timely submitted this request for reconsideration of patent term adjustment (with required fee), asserting that the correct number of days of Patent Term Adjustment is 918 days under the courts interpretation of the overlap provision as set forth in Wyeth v. Dudas, 580 F. Supp. 2d 138, 88 U.S.P.Q. 2d 1538 (D.D.C. 2008). Patentee asserts that pursuant to Wyeth, a PTO delay under §154(b)(1)(A) overlaps with a delay under §154(b)(1)(B) only if the delays "occur on the same day." Patentee maintains that the total non-overlapping PTO delay under §154(b)(1)(A) & (B) is 918 (640 + 278) days as these periods do not occur on the same day.

Patentee further avers that the Office has miscalculated the date of completion of all 371 requirements as April 29, 2005, rather than May 1, 2005. Accordingly, patentee states the period of Office delay under §154(b)(1)(A) & (B) begins on May 1, 2005, rather than April 29, 2005.

OPINION

35 U.S.C. 371(b) states that subject to subsection (f) of this section, the national stage shall commence with the expiration of the applicable time limit under article 22 (1) or (2), or under article 39 (1)(a) of the treaty.

Article 39(1) states that

> (a) if the election of any Contracting State has been effected prior to the expiration of the 19th month from the priority date, the provisions of Article 22 shall not apply to such State and the applicant shall furnish a copy of the international application (unless the communication under Article 20 has already taken place) and a translation thereof (as prescribed), and pay the national fee (if any), to each elected Office not later than at the expiration of 30 months from the priority date.
>
> (b) Any national law may, for performing the acts referred to in subparagraph (a), fix time limits which expire later than the time limit provided for in that subparagraph.

PCT Rule 80.5 states that if the expiration of any period during which any document or fee must reach a national

Office or intergovernmental organization falls on a day:

(i) on which such Office or organization is not open to the public for the purposes of the transaction of official business;

(ii) on which ordinary mail is not delivered in the locality in which such Office or organization is situated;

(iii) which, where such Office or organization is situated in more than one locality, is an official holiday in at least one of the localities in which such Office or organization is situated, and in circumstances where the national law applicable by that Office or organization provides, in respect of national applications, that, in such a case, such period shall expire on a subsequent day; or

(iv) which, where such Office is the government authority of a Contracting State entrusted with the granting of patents, is an official holiday in part of that Contracting State, and in circumstances where the national law applicable by that Office provides, in respect of national applications, that, in such a case, such period shall expire on a subsequent day; the period shall expire on the next subsequent day on which none of the said four circumstances exists.

Patentee is correct that the completion date and commencement date under 35 U.S.C. § 371 were miscalculated. The priority date in this application is November 1, 2002. Applicants did not file an express request under 35 U.S.C 371(f). As the date which is 30 months from the priority date, May 1, 2005, fell on a Sunday, the commencement date is shifted to May 2, 2005. See PCT Rule 80.5. Additionally, as applicant completed all 35 U.S.C. 371 requirements on filing the national stage prior to commencement, the completion date is also shifted to May 2, 2005. Accordingly, the date of fulfillment of the requirements of § 371, and the date of commencement in the national stage, is May 2, 2005.

Patentee's interpretation of the period of overlap has been considered, but found inconsistent with the Office's interpretation of the overlap provision, 35 U.S.C. 154(b)(2)(A).

35 U.S.C. 154(b)(2)(A) limits the adjustment of patent term, as follows:

> to the extent that the periods of delay attributable to grounds specified in paragraph (1) overlap, the period of any adjustment granted under this subsection shall not exceed the actual number of days the issuance of the patent was delayed.

As explained in *Explanation of 37 CFR 1.703(f)*[6] *and of the United States Patent and Trademark Office Interpretation of 35 U.S.C. 154(b)(2)(A)*, 69 Fed. Reg. 34283 (June 21, 2004), the Office interprets 35 U.S.C. 154(b)(2)(A) as permitting either patent term adjustment under 35 U.S.C. 154(b)(1)(A)(i)-(iv), or patent term adjustment under 35 U.S.C. 154(b)(1)(B), but not as permitting patent term adjustment under both 35 U.S.C. 154(b)(1)(A)(i)-(iv) and 154(b)(1)(B). Accordingly, the Office implements the overlap provision as follows:

> If an application is entitled to an adjustment under 35 U.S.C. 154(b)(1)(B), the entire period during which the application was pending (except for periods excluded under 35 U.S.C. 154(b)(1)(B)(i)-(iii)), and not just the period beginning three years after the actual filing date of the application, is the period of delay under 35 U.S.C. 154(b)(1)(B) in determining whether periods of delay overlap under 35 U.S.C. 154(b)(2)(A). Thus, any days of delay for Office issuance of the patent more than 3 years after the filing date of the application, which overlap with the days of patent term adjustment accorded prior to the issuance of the patent will not result in any additional patent term adjustment. See 35 U.S.C. 154(b)(1)(B), 35 U.S.C. 154(b)(2)(A), and 37 CFR § 1.703(f). See *Changes to Implement Patent Term Adjustment Under Twenty Year Term; Final Rule*, 65 Fed. Reg. 56366 (Sept. 18, 2000). See also *Revision of Patent Term Extension and Patent Term Adjustment Provisions; Final Rule*, 69 Fed. Reg. 21704 (April 22, 2004), 1282 Off. Gaz.

---

[6] Likewise, 37 CFR 1.703(f) provides that:

> To the extent that periods of delay attributable to the grounds specified in §1.702 overlap, the period of adjustment granted under this section shall not exceed the actual number of days the issuance of the patent was delayed.

Pat. Office 100 (May 18, 2004). See also *Explanation of 37 CFR 1.703(f) and of the United States Patent and Trademark Office Interpretation of 35 U.S.C. 154(b)(2)(A)*, 69 Fed. Reg. 34283 (June 21, 2004).

Further, as stated in the *Explanation of 37 CFR 1.703(f) and of the United States Patent and Trademark Office Interpretation of 35 U.S.C. 154(b)(2)(A)*, the Office has consistently taken the position that if an application is entitled to an adjustment under the three-year pendency provision of 35 U.S.C. 154(b)(1)(B), the entire period during which the application was pending before the Office (except for periods excluded under 35 U.S.C. 154(b)(1)(B)(i)-(iii)), and not just the period beginning three years after the actual filing date of the application, is the relevant period under 35 U.S.C. 154(b)(1)(B) in determining whether periods of delay "overlap" under 35 U.S.C. 154(b)(2)(A).

This interpretation is consistent with the statute. Taken together the statute and rule provide that to the extent that periods of delay attributable to grounds specified in 35 U.S.C. 154(b)(1) and in corresponding §1.702 overlap, the period of adjustment granted shall not exceed the actual number of days the issuance of the patent was delayed.

In this instance, the relevant period under 35 U.S.C. 154(b)(1)(B) in determining whether periods of delay "overlap" under 35 U.S.C. 154(b)(2)(A) is the period during which the application was pending before the Office beginning on the date of fulfillment of the requirements of 35 U.S.C. 371, May 2, 2005, and ending on the date of the issuance of the application as a patent, February 3, 2009 (not including any other periods excluded under 35 U.S.C. 154(b)(1)(B)(i)-(iii)). Pursuant to 35 U.S.C. 154(b)(1)(A) and 37 CFR 1.702(a)(1), 639 days of patent term adjustment should have been accorded during the pendency of the application for Office delay prior to the issuance of the patent. Pursuant to 35 U.S.C. 154(b)(1)(B) and 37 CFR 1.702(b), 277 days of patent term adjustment accrued for Office issuance of the patent more than 3 years after the date of fulfillment of the requirements of 35 U.S.C. 371.

All of the 277 days of patent term adjustment under 37 CFR 1.702(b) overlap with the 639 days of patent term adjustment under 37 CFR 1.702(a)(1). Entry of both the 639 days and the 277 days is neither permitted nor warranted. The actual number of days issuance of the patent was delayed is 639 days.

Accordingly, at issuance, the Office should have entered 639 days of patent term adjustment.

CONCLUSION

In view thereof, the revised determination of patent term adjustment at the time of the issuance of the patent is 639 days.

The Office thanks Patentee for their good faith and candor in bringing this matter to the attention of the Office.

The application file is being forwarded to the Certificates of Correction Branch for issuance of a certificate of correction in order to rectify this error. The Office will issue a certificate of correction indicating that the term of the above-identified patent is extended or adjusted by six hundred thirty-nine **(639)** days.

The Office acknowledges submission of the $200.00 fee set forth in 37 CFR 1.18(e). No additional fees are required.

Telephone inquiries specific to this matter should be directed to Senior Petitions Attorney Douglas I. Wood, at (571) 272-3231.

Alesia M. Brown
Senior Petitions Attorney
Office of Petitions

Encl: DRAFT Certificate of Correction

UNITED STATES PATENT AND TRADEMARK OFFICE

CERTIFICATE OF CORRECTION

PATENT : 7,484,688 B2

DATED : February 3, 2009

INVENTOR(S) : Chow et al.

It is certified that error appears in the above-identified patent and that said Letters Patent is hereby corrected as shown below:

On the cover page,

[*] Notice: Subject to any disclaimer, the term of this patent is extended or adjusted under 35 USC 154(b) by (642) days

Delete the phrase "by 642 days" and insert – by 639 days--

23 SEP 2005

#3

UNITED STATES PATENT AND TRADEMARK OFFICE

Commissioner for Patents
United States Patent and Trademark Office
P.O. Box 1450
Alexandria, VA 22313-1450
www.uspto.gov

Birch, Stewart, Kolasch & Birch, LLP
P.O. Box 747
Falls Church, VA 22040-0747

In re Application of
MENGELT, Rateo
Application No.: 10/533,379
PCT No.: PCT/SE03/01377
Int. Filing Date: 04 September 2003
Priority Date: 10 September 2002
Attorney Docket No.: 0552-0156PUS1
For: DEVICE FOR DRAWING OFF/REFILLING AND BLEEDING BRAKE FLUID

DECISION ON PETITION
UNDER 37 CFR 1.137(b)

The petition to revive under 37 CFR 1.137(b) filed 29 April 2005 in the above-captioned application is hereby **GRANTED** as follows:

Applicant's statement that "the entire delay in filing the required reply from the due date for the reply until the filing of a grantable petition under 37 CFR 1.137(b) was unintentional" meets the requirements of 37 CFR 1.137(b)(3).

A review of the application file reveals that applicants have submitted the basic national fee and the requirements of 37 CFR 1.137(b) have been satisfied. Therefore, the request to revive the application abandoned under 35 U.S.C. 371(d) is granted as to the National stage in the United States of America.

However, the declaration filed on 29 April 2005 is defective and is insufficient to satisfy the oath or declaration requirement of 35 CFR 371(c)(4) for entry into the national stage in the United States of America. Specifically, the declaration submitted includes an alteration that has not been initialed and dated by the inventor. (See MPEP §605.04(a) and 37 CFR 1.52(c)) Further, it appears that the declaration has been altered to correct the inventor's first name. If this is the case, an explanation pursuant to Manual of Patent Examining Procedure §201.03 or §605.04(a) is required.

A proper response must be filed within **TWO (2) MONTHS** from the mail date of this decision and must include a proper declaration in compliance with 37 CFR 1.497(a)-(b) executed by all of the named inventors. Extensions of this time limit may be obtained under 37 CFR 1.136(a).

Any further correspondence with respect to this matter should be addressed to: Mail Stop PCT, Commissioner for Patents, Office of PCT Legal Administration, P.O. Box 1450, Alexandria, Virginia 22313-1450, with the contents of the letter marked to the attention of the Office of PCT Legal Administration.

Anthony Smith
Attorney-Advisor
Office of PCT Legal Administration
Telephone: (571) 272-3298
Facsimile: (571) 273-0459

12 APR 2006

#5

UNITED STATES PATENT AND TRADEMARK OFFICE

Commissioner for Patents
United States Patent and Trademark Office
P.O. Box 1450
Alexandria, VA 22313-1450
www.uspto.gov

Birch, Stewart, Kolasch & Birch, LLP
P.O. Box 747
Falls Church, VA 22040-0747

In re Application of
MENGELT, Rato
Application No.: 10/533,379
PCT No.: PCT/SE03/01377
Int. Filing Date: 04 September 2003
Priority Date: 10 September 2002
Attorney Docket No.: 0552-0156PUS1
For: DEVICE FOR DRAWING OFF/REFILLING AND BLEEDING BRAKE FLUID

DECISION ON REQUEST

This decision is issued in response to applicants' "Response to Decision on Petition" filed 23 November 2005 requesting the correction of the inventor's name. Counsel is notifying the United States Patent and Trademark Office that the correct spelling of the inventor's name is RÄTO Mengelt as indicated on the declaration rather than Rateo Mengelt as indicated on the published international application.

Counsel states in the present response that "the originally filed declaration included a correction to a typographical error in the name of the inventor." As indicated in Section 201.03 of the Manual of Patent Examining Procedure, where a typographical or transliteration error in the spelling of an inventor's name is discovered, a petition under 37 CFR 1.48 is not required. Accordingly, applicant's explanation of the difference in the spelling of the inventor's name is accepted and noted for the record.

For the reasons above, the request is **GRANTED**.

This application is being forwarded to the United States Designated/Elected Office for further processing and for review of the national stage papers submitted on 23 November 2005.

Anthony Smith

Anthony Smith
Attorney-Advisor
Office of PCT Legal Administration
Tel: (571) 272-3298
Fax: (571) 273-0459

UNITED STATES PATENT AND TRADEMARK OFFICE

Commissioner for Patents
United States Patent and Trademark Office
P.O. Box 1450
Alexandria, VA 22313-1450
www.uspto.gov

MAILED

MAY 10 2010

OFFICE OF PETITIONS

WOODCOCK WASHBURN LLP
CIRA CENTRE, 12TH FLOOR
2929 ARCH STREET
PHILADELPHIA PA 19104-2891

In re Application of	:	
Hongming CHEN	:	
Application No. 10/533,420	:	DECISION ON PETITION
Filed: April 29, 2005	:	UNDER 37 CFR 1.78(a)(3)
Attorney Docket No. JJTP-0030 / TPI5020USPCT1	:	

This is a decision on the petition under 37 CFR 1.78(a)(3), filed December 23, 2009, to accept an unintentionally delayed claim under 35 U.S.C. § 120 for the benefit of priority to the prior-filed nonprovisional applications set forth in the amendment filed with the petition.

The petition is **GRANTED**.

A petition for acceptance of a claim for late priority under 37 CFR 1.78(a)(3) is only applicable to those applications filed on or after November 29, 2000. Further, the petition is appropriate only after the expiration of the period specified in 37 CFR 1.78(a)(2)(ii). In addition, the petition under 37 CFR 1.78(a)(3) must be accompanied by:

(1) the reference required by 35 U.S.C. § 120 and 37 CFR 1.78(a)(2)(i) of the prior-filed application, unless previously submitted;
(2) the surcharge set forth in § 1.17(t); and
(3) a statement that the entire delay between the date the claim was due under 37 CFR 1.78(a)(2)(ii) and the date the claim was filed was unintentional. The Director may require additional information where there is a question whether the delay was unintentional.

All of the above requirements having been satisfied, the late claim for priority under 35 U.S.C. § 120 is accepted as being unintentionally delayed.

The granting of the petition to accept the delayed benefit claim to the prior-filed applications under 37 CFR 1.78(a)(3) should not be construed as meaning that this application is entitled to the benefit of the prior-filed applications. In order for this application to be entitled to the benefit of the prior-filed applications, all other requirements under 35 U.S.C. § 120 and 37 CFR 1.78(a)(1) and (a)(2) must be met. Similarly, the fact that the corrected Filing Receipt accompanying this decision on petition includes the prior-filed applications should not be construed as meaning that applicant is entitled to the claim for benefit of priority to the prior-filed applications noted thereon. Accordingly, the examiner will, in due course, consider this benefit claim and determine whether the application is entitled to the benefit of the earlier filing date.

A corrected Filing Receipt, which includes the priority claim to the prior-filed nonprovisional applications, accompanies this decision on petition.

Any inquiries concerning this decision may be directed to Michelle R. Eason at (571) 272-4231. All other inquiries concerning either the examination procedures or status of the application should be directed to the Technology Center.

This application is being forwarded to Technology Center Art Unit 1797 for consideration by the examiner of applicant's entitlement to claim benefit of priority under 35 U.S.C. § 120 to the prior-filed applications.

Thurman K. Page
Thurman K. Page
Petitions Examiner
Office of Petitions

ATTACHMENT: Corrected Filing Receipt

UNITED STATES PATENT AND TRADEMARK OFFICE

UNITED STATES DEPARTMENT OF COMMERCE
United States Patent and Trademark Office
Address: COMMISSIONER FOR PATENTS
P.O. Box 1450
Alexandria, Virginia 22313-1450
www.uspto.gov

APPLICATION NUMBER	FILING or 371(c) DATE	GRP ART UNIT	FIL FEE REC'D	ATTY.DOCKET.NO	TOT CLAIMS	IND CLAIMS
10/533,420	04/29/2005	1797	600	JJTP-0030 / TPI5020USPCT1	6	3

CONFIRMATION NO. 4171

CORRECTED FILING RECEIPT

45511
WOODCOCK WASHBURN LLP
CIRA CENTRE, 12TH FLOOR
2929 ARCH STREET
PHILADELPHIA, PA 19104-2891

OC000000041287884

Date Mailed: 05/10/2010

Receipt is acknowledged of this non-provisional patent application. The application will be taken up for examination in due course. Applicant will be notified as to the results of the examination. Any correspondence concerning the application must include the following identification information: the U.S. APPLICATION NUMBER, FILING DATE, NAME OF APPLICANT, and TITLE OF INVENTION. Fees transmitted by check or draft are subject to collection. Please verify the accuracy of the data presented on this receipt. **If an error is noted on this Filing Receipt, please submit a written request for a Filing Receipt Correction. Please provide a copy of this Filing Receipt with the changes noted thereon. If you received a "Notice to File Missing Parts" for this application, please submit any corrections to this Filing Receipt with your reply to the Notice. When the USPTO processes the reply to the Notice, the USPTO will generate another Filing Receipt incorporating the requested corrections**

Applicant(s)

Hongming Chen, Acton, MA;
Hector Guzman, Jamaica Plain, MA;
Colin R. Gardner, Concord, MA;

Power of Attorney: The patent practitioners associated with Customer Number 45511

Domestic Priority data as claimed by applicant

This application is a 371 of PCT/US03/35012 11/04/2003
which claims benefit of 60/423,365 11/04/2002
This application 10/533,420
claims benefit of 60/423,366 11/04/2002

Foreign Applications

If Required, Foreign Filing License Granted: 04/26/2010

The country code and number of your priority application, to be used for filing abroad under the Paris Convention, is **US 10/533,420**

Projected Publication Date: Not Applicable

Non-Publication Request: No

Early Publication Request: No

Title

METHOD FOR DETERMINING EFFECT OF PREFORMULATION FORMS ON THEIR DISSOLUTION RATES

Preliminary Class

436

PROTECTING YOUR INVENTION OUTSIDE THE UNITED STATES

Since the rights granted by a U.S. patent extend only throughout the territory of the United States and have no effect in a foreign country, an inventor who wishes patent protection in another country must apply for a patent in a specific country or in regional patent offices. Applicants may wish to consider the filing of an international application under the Patent Cooperation Treaty (PCT). An international (PCT) application generally has the same effect as a regular national patent application in each PCT-member country. The PCT process **simplifies** the filing of patent applications on the same invention in member countries, but **does not result** in a grant of "an international patent" and does not eliminate the need of applicants to file additional documents and fees in countries where patent protection is desired.

Almost every country has its own patent law, and a person desiring a patent in a particular country must make an application for patent in that country in accordance with its particular laws. Since the laws of many countries differ in various respects from the patent law of the United States, applicants are advised to seek guidance from specific foreign countries to ensure that patent rights are not lost prematurely.

Applicants also are advised that in the case of inventions made in the United States, the Director of the USPTO must issue a license before applicants can apply for a patent in a foreign country. The filing of a U.S. patent application serves as a request for a foreign filing license. The application's filing receipt contains further information and guidance as to the status of applicant's license for foreign filing.

Applicants may wish to consult the USPTO booklet, "General Information Concerning Patents" (specifically, the section entitled "Treaties and Foreign Patents") for more information on timeframes and deadlines for filing foreign patent applications. The guide is available either by contacting the USPTO Contact Center at 800-786-9199, or it can be viewed on the USPTO website at http://www.uspto.gov/web/offices/pac/doc/general/index.html.

For information on preventing theft of your intellectual property (patents, trademarks and copyrights), you may wish to consult the U.S. Government website, http://www.stopfakes.gov. Part of a Department of Commerce initiative, this website includes self-help "toolkits" giving innovators guidance on how to protect intellectual property in specific countries such as China, Korea and Mexico. For questions regarding patent enforcement issues, applicants may call the U.S. Government hotline at 1-866-999-HALT (1-866-999-4158).

LICENSE FOR FOREIGN FILING UNDER

Title 35, United States Code, Section 184

Title 37, Code of Federal Regulations, 5.11 & 5.15

GRANTED

The applicant has been granted a license under 35 U.S.C. 184, if the phrase "IF REQUIRED, FOREIGN FILING LICENSE GRANTED" followed by a date appears on this form. Such licenses are issued in all applications where

the conditions for issuance of a license have been met, regardless of whether or not a license may be required as set forth in 37 CFR 5.15. The scope and limitations of this license are set forth in 37 CFR 5.15(a) unless an earlier license has been issued under 37 CFR 5.15(b). The license is subject to revocation upon written notification. The date indicated is the effective date of the license, unless an earlier license of similar scope has been granted under 37 CFR 5.13 or 5.14.

This license is to be retained by the licensee and may be used at any time on or after the effective date thereof unless it is revoked. This license is automatically transferred to any related applications(s) filed under 37 CFR 1.53(d). This license is not retroactive.

The grant of a license does not in any way lessen the responsibility of a licensee for the security of the subject matter as imposed by any Government contract or the provisions of existing laws relating to espionage and the national security or the export of technical data. Licensees should apprise themselves of current regulations especially with respect to certain countries, of other agencies, particularly the Office of Defense Trade Controls, Department of State (with respect to Arms, Munitions and Implements of War (22 CFR 121-128)); the Bureau of Industry and Security, Department of Commerce (15 CFR parts 730-774); the Office of Foreign AssetsControl, Department of Treasury (31 CFR Parts 500+) and the Department of Energy.

NOT GRANTED

No license under 35 U.S.C. 184 has been granted at this time, if the phrase "IF REQUIRED, FOREIGN FILING LICENSE GRANTED" DOES NOT appear on this form. Applicant may still petition for a license under 37 CFR 5.12, if a license is desired before the expiration of 6 months from the filing date of the application. If 6 months has lapsed from the filing date of this application and the licensee has not received any indication of a secrecy order under 35 U.S.C. 181, the licensee may foreign file the application pursuant to 37 CFR 5.15(b).

UNITED STATES PATENT AND TRADEMARK OFFICE

COMMISSIONER FOR PATENTS
UNITED STATES PATENT AND TRADEMARK OFFICE
WASHINGTON, D.C. 20231
www.uspto.gov

Albert Josif
Moiano & Associati
Via Meravigil 16
20123 Milano, Italy
Italy

MAILED

MAY 03 2007

TECHNOLOGY CENTER 2100

In re Application of
Michele Rubertelli
Application No. 10/533,455
Filed: October 21, 2005

: DECISION GRANTING PETITION
: TO RESET PERIOD FOR REPLY

This is a decision on the petition filed on 15 February 2007, requesting that the shortened statutory period for reply set forth in the Office communication mailed on December 8, 2006 be reset to run from the date on which the Office communication was actually received at the correspondence address of record.

The petition is GRANTED.

Petitioner provided a statement that the Office communication in question was received at the correspondence address of record on 15 February 2007. The petition was filed within two weeks of receipt of the Office communication. A substantial portion of the set reply period had elapsed on the date of receipt.

Accordingly, the shortened statutory period that was originally set forth in the Office communication originally mailed on December 8, 2006 is hereby reset to run FROM THE RECEIPT DATE OF 15 February 2007.

A response to the above mention office action was received on April 4, 2007 including a 3-month extension of time payment of $510.00. With the granting of this petition only a 1-month extension of time payment of $60.00 is necessary to make the response timely. This decision will be forwarded to the Technical Support Staff to refund to your deposit account number (13-3860) the difference in the amount paid verses required of $450.00.

Any inquiry concerning this decision should be directed to Tod Swann whose telephone is (571) 272-3612.

Tod Swann
Quality Assurance Specialist
Technology Center 2100
Computer Architecture and Software

UNITED STATES PATENT AND TRADEMARK OFFICE

Commissioner for Patents
United States Patent and Trademark Office
P.O. Box 1450
Alexandria, VA 22313-1450
www.uspto.gov

MODIANO & ASSOCIATI
VIA MERAVIGIL 16
20123 MILANO
ITALY IT ITALY

MAILED

MAY 11 2009

OFFICE OF PETITIONS

In re Application of :
Michele RUBERTELLI et al. :
Application No. 10/533,455 : DECISION ON PETITION
Filed: October 21, 2005 :
Attorney Docket No. 40306/GM/lp :

This is a decision on the petition under the unintentional provisions of 37 CFR 1.137(b), filed April 10, 2009, to revive the above-identified application.

The petition is **GRANTED**.

The application became abandoned for failure to timely reply within the meaning of 37 CFR 1.113 to the final Office action, mailed March 13, 2008, which set a shortened statutory period for reply of three (3) months. A two (2) month extension of time under the provisions of 37 CFR 1.136(a) was obtained. Accordingly, the application became abandoned on June 14, 2008.

The petition satisfies the requirements of 37 CFR 1.137(b) in that petitioner has supplied (1) the reply in the form of a Request for Continued Examination (RCE) and fee of $405.00, and the submission required by 37 CFR 1.114; (2) the petition fee of $810.00; and (3) a proper statement of unintentional delay. Accordingly, the reply to the final Office action of March 13, 2008 is accepted as having been unintentionally delayed.

Telephone inquiries concerning this decision should be directed to the undersigned at (571) 272-4231.

This application is being referred to Technology Center AU 2434 for processing of the RCE and for appropriate action by the Examiner in the normal course of business on the amendment submitted in accordance with 37 CFR 1.114.

Michelle R. Eason
Paralegal Specialist
Office of Petition

UNITED STATES PATENT AND TRADEMARK OFFICE

UNITED STATES DEPARTMENT OF COMMERCE
United States Patent and Trademark Office
Address: COMMISSIONER FOR PATENTS
P.O. Box 1450
Alexandria, Virginia 22313-1450
www.uspto.gov

HONEYWELL INTERNATIONAL INC.
PATENT SERVICES
101 COLUMBIA ROAD
P O BOX 2245
MORRISTOWN, NJ 07962-2245

Mail Date: 05/10/2010

Applicant	: Alfred Siggel	: DECISION ON REQUEST FOR
Patent Number	: 7641807	: RECALCULATION of PATENT
Issue Date	: 01/05/2010	: TERM ADJUSTMENT IN VIEW
Application No	: 10/533,463	: OF WYETH AND NOTICE OF INTENT TO
Filed	: 12/04/2006	: ISSUE CERTIFICATE OF CORRECTION
		:

The Request for Recalculation is **GRANTED** to the extent indicated.

The patent term adjustment has been determined to be **555** days. The USPTO will *sua sponte* issue a certificate of correction reflecting the amount of PTA days determined by the recalculation.

Prior to the issuance of the certificate of correction, the USPTO will afford patentee an opportunity to be heard and request reconsideration. Accordingly, patentee has **one month or thirty (30) days**, whichever is longer, to file a request for reconsideration of this patent term adjustment calculation. See 35 U.S.C. 154(b)(3)(B)(ii) and 37 CFR 1.322(a)(4). No extensions of time will be granted under 37 CFR 1.136.

Patentee should use document code PET.OP if electronically filing a request for reconsideration of this patent term adjustment calculation. The patentee must also include the information required by 37 CFR 1.705(b)(2) and the fee required by 37 CFR 1.18(e). If patentee does not file a timely request for reconsideration of this patent term adjustment calculation including the information required by 37 CFR 1.705(b)(2) and the fee required by 37 CFR 1.18(e), the USPTO will issue a certificate of correction reflecting the PTA determination noted above.

Patentee should be aware that in order to preserve the right to review in the United States District Court for the District of Columbia of the USPTO patent term adjustment determination, patentee must ensure that he or she also take the steps required under 35 U.S.C. 154(b)(4)(A) in a timely manner. Nothing in the request for recalculation should be construed as providing an alternative time frame for commencing a civil action under 35 U.S.C. 154(b)(4)(A).

Any questions concerning this decision should be directed to the Office of Patent Legal Administration at 571-272-7702.

UNITED STATES PATENT AND TRADEMARK OFFICE

Commissioner for Patents
United States Patent and Trademark Office
P.O. Box 1450
Alexandria, VA 22313-1450
www.uspto.gov

ABELMAN, FRAYNE & SCHWAB
666 Third Ave., 10th Floor
New York NY 10017-5621

COPY MAILED

MAR 1 2 2007

OFFICE OF PETITIONS

In re Application of	:	
JARALLA	:	
Application No. 10/533,490	:	DECISION DISMISSING
Filed: April 28, 2005	:	PETITION UNDER 37 CFR 1.10(c)
Attorney Docket No. 206,973	:	

This is a decision on the petition filed January 16, 2007, which is properly treated as a petition under 37 CFR 1.10(c) requesting that the submission of the issue fee payment for the above-identified application be considered as filed on January 3, 2007, which is the "date-in" or other official USPS notation on the Express Mail Mailing Label, instead of the currently accorded filing date of January 4, 2007.

The petition is **DISMISSED**.

Any request for reconsideration of this decision should be filed within **TWO MONTHS** of the date of this decision in order to be considered timely (see 37 CFR 1.181(f)). No extensions of time pursuant to the provisions of 37 CFR 1.136 are permitted. If reconsideration is not requested within the time period specified above, this submission of the issue fee payment for the application will be referred to Office of Publications with the presently accorded filing date of January 4, 2007.

37 CFR 1.10(c) sets forth procedures for filing a petition to the Director for a filing date as of the date of deposit with the USPS, where there is a discrepancy between the filing date initially accorded by the Office and the "date in" entered by the USPS or other official USPS notation.

To be grantable, a petition must:

(1) be filed promptly after the person becomes aware that the Office has accorded, or will accord, a filing date other than the USPS deposit date;

(2) include a showing that the number of the "Express Mail" mailing label was placed on each piece of correspondence prior to the original mailing; and

(3) include a true copy of the "Express Mail" mailing label showing the "date in" or other official notation by the USPS.

This petition lacks item (3) above.

Petitioner requests the filing date of January 3, 2007 on the basis that there is a discrepancy between the filing date the USPTO has currently accorded this application and the "date-in" or other official USPS notation on the "Express Mail" mailing label. The Remarks of the petition state, "[a]ttached is a true copy of the "Express Mailing Label" for this submission showing the "date-in" entry of January 3, 2007 in round stamp made by an employee of the U.S. Postal Service." Unfortunately, the copy of round stamp on the Express Mail mailing label supplied to the Office is illegible, and no date can be discerned.

Moreover even if the submission was granted a filing date of January 3, 2007, the above-identified application is abandoned. The application became abandoned for failure s to timely pay the issue and publication fees on or before January 2, 2007, as required by the Notice of Allowance and Fee(s) Due, mailed October 2, 2006, which set a statutory period for reply of three (3) months. Accordingly, the application became abandoned on January 3, 2007.

Further correspondence with respect to this matter should be addressed as follows:

By Mail: Mail Stop PETITION
Commissioner for Patents
P. O. Box 1450
Alexandria, VA 22313-1450

By facsimile: (571) 273-8300
Attn: Office of Petitions

By hand: U. S. Patent and Trademark Office
Customer Service Window, Mail Stop Petitions
Randolph Building
401 Dulany Street
Alexandria, VA 22314

Telephone inquiries concerning this matter may be directed to Denise Pothier at (571) 272-4787.

Frances Hicks
Lead Paralegal
Office of Petitions

UNITED STATES PATENT AND TRADEMARK OFFICE

Commissioner for Patents
United States Patent and Trademark Office
P.O. Box 1450
Alexandria, VA 22313-1450
www.uspto.gov

ABELMAN, FRAYNE & SCHWAB
666 Third Ave., 10th Floor
New York NY 10017-5621

COPY MAILED

JUN 0 7 2007

OFFICE OF PETITIONS

In re Application of
JARALLA
Application No. 10/533,490
Filed: April 28, 2005
Attorney Docket No. 206,973

DECISION DISMISSING
PETITION UNDER 37 CFR 1.10(c)

This is a decision on a renewed petition filed March 19, 2007, which is properly treated as a petition under 37 CFR 1.10(c) requesting that the submission of the issue and publication fee payments and the formal drawings for the above-identified application be considered as filed on January 3, 2007, instead of the currently accorded filing date of January 4, 2007.

The petition is **DISMISSED**.

Any request for reconsideration of this decision should be filed within **TWO MONTHS** of the date of this decision in order to be considered timely (see 37 CFR 1.181(f)). No extensions of time pursuant to the provisions of 37 CFR 1.136 are permitted. If reconsideration is not requested within the time period specified above, this submission of the issue fee payment for the application will be referred to Office of Publications with the presently accorded filing date of January 4, 2007.

37 CFR 1.10(c) sets forth procedures for filing a petition to the Director for a filing date as of the date of deposit with the USPS, where there is a discrepancy between the filing date initially accorded by the Office and the "date in" entered by the USPS or other official USPS notation.

To be grantable, a petition must:

(1) be filed promptly after the person becomes aware that the Office has accorded, or will accord, a filing date other than the USPS deposit date;

(2) include a showing that the number of the "Express Mail" mailing label was placed on each piece of correspondence prior to the original mailing; and

(3) include a true copy of the "Express Mail" mailing label showing the "date in" or other official notation by the USPS.

This petition lacks item (2) above.

Petitioner alleges that the payment of the issue and publication fees and drawings were deposited with the United States Postal Service on January 3, 2007 using Express Mail Service. In support, the petition is accompanied by a copy of Express Mail receipt No. ER 059677689 US showing a round stamp of January 3, 2007. The same Express Mail number is found on the fee transmittal sheet itemizing payment of the issue and publication fees and the postcard receipt itemizing a cover letter, an issue fee transmittal, formal drawings (4 pgs) and a check for $1700 (which includes the issue and publication fees). Additionally, the previous petition included a letter from a United States Postal Service Customer Service Supervisor, Philip Grant, of the Grand Central Station Post Office stating, "[t]he date postmarked on your copy of the Express Mail receipt is our confirmation of receipt for that date, which is the "date in" prior to the last scheduled pickup . . . If the Express Mail piece is received before the close of business on a particular day it may show a processing date of the next day in the tracking system. This should not be considered as the official "date-in" of receipt at the Post Office. The official "date-in" receipt is the date [p]ostmarked in the round stamp on your customer copy." Lastly, Petitioner has supplemented the record with an official correspondence from the Under Secretary of Commerce for Intellectual Property and Director of the United States Patent and Trademark Office, entitled, "Closing of the United States Patent and Trademark Office on Tuesday, January 2, 2007." This correspondence clarifies that the Office was not open on January 2, 2007, and as such, "[a]ny action or fee due on Tuesday, January 2, 2007, will be considered as timely for purposes of, e.g., 35 U.S.C. §§ 119, 120, 133, and 151, if the action is taken, or the fee is paid, on the next succeeding business day on which the USPTO was open, that is, Wednesday, January 3, 2007." Thus, a January 3, 2007 submission to requirements of the Notice of Allowance and Allowability mailed October 2, 2006 will be considered timely.

Based on the evidence provided, petitioner has not made a convincing showing that the four pages of formal drawings were deposited as "Express Mail" with the U. S. Postal Service on January 3, 2007. As stated above, the fee transmittal sheet did include the Express Mail number label itemizing the issue and publication fees and is considered as filed on January 3, 2007. However, the postcard receipt is fugitive evidence that is not part of the official USPTO record for this application. Petitioner overlooks that he is not requesting a filing date for the postcard receipt of January 3, 2007; he is asking for a filing date of January 3, 2007 for the above-identified submission of formal drawings that, simply put, did not have Express Mail Label No. ER 059677689 US affixed thereon. In order to obtain the remedial benefits of 37 CFR 1.10, petitioner had to comply with the requirement s of 37 CFR 1.10(c)(2) for the correspondence in question; and the postcard receipt is not that correspondence.

Moreover, MPEP 513(III) states,

> [t]o be effective, the number must be placed on each separate paper and each fee transmittal either directly on the document or by a separate paper firmly and securely attached thereto. In situations wherein the correspondence includes several papers

directed to the same application (for example, the specification, drawings and declaration for a new application), the correspondence may be submitted with a cover or transmittal letter which should itemize the papers. It is not necessary that the number be placed on each page of a particular paper of fee transmittal. Merely placing the number in one prominent location on each separate paper or fee transmittal (or cover sheet or transmittal letter which should itemize the separate papers and fees) will be sufficient.

A review of the file does include the Express Mail Label No. ER 059677689 US on the issue fee transmittal but does not include the Express Mail label number on the formal drawings or a cover sheet or a transmittal letter, which itemizes the formal drawings. As such, the submission of the formal drawings are not accorded the January 3, 2007 date, and the application is abandoned for failing to submit the formal drawings on or before January 3, 2007.

Petitioner may wish to consider filing a petition stating that the delay was unintentional. Public Law 97-247, § 3, 96 Stat. 317 (1982), which revised patent and trademark fees, amended 35 U.S.C. § 41(a)(7) to provide for the revival of an "unintentionally" abandoned application without a showing that the delay in prosecution or in late payment of the issue fee was "unavoidable." This amendment to 35 U.S.C. § 41(a)(7) has been implemented in 37 CFR 1.137(b). An "unintentional" petition under 37 CFR 1.137(b) must be accompanied by the $1500 petition fee.

The filing of a petition under 37 CFR 1.137(b) cannot be intentionally delayed and therefore must be filed promptly. A person seeking revival due to unintentional delay cannot make a statement that the delay was unintentional unless the entire delay, including the date it was discovered that the application was abandoned until the filing of the petition to revive under 37 CFR 1.137(b), was unintentional. A statement that the delay was unintentional is not appropriate if petitioner intentionally delayed the filing of a petition for revival under 37 CFR 1.137(b).

Further correspondence with respect to this matter should be addressed as follows:

By Mail: Mail Stop PETITION
Commissioner for Patents
P. O. Box 1450
Alexandria, VA 22313-1450

By facsimile: (571) 273-8300
Attn: Office of Petitions

By hand: U. S. Patent and Trademark Office
Customer Service Window, Mail Stop Petitions
Randolph Building
401 Dulany Street
Alexandria, VA 22314

Telephone inquiries concerning this matter may be directed to Denise Pothier at (571) 272-4787.

Brian Hearn
Petitions Examiner
Office of Petitions

Notice of Allowability	Application No.	Applicant(s)	
	10/533,490	JARALLA, ABDULGHANI	
	Examiner	Art Unit	
	David A. Rogers	2856	

-- The MAILING DATE of this communication appears on the cover sheet with the correspondence address--

All claims being allowable, PROSECUTION ON THE MERITS IS (OR REMAINS) CLOSED in this application. If not included herewith (or previously mailed), a Notice of Allowance (PTOL-85) or other appropriate communication will be mailed in due course. **THIS NOTICE OF ALLOWABILITY IS NOT A GRANT OF PATENT RIGHTS.** This application is subject to withdrawal from issue at the initiative of the Office or upon petition by the applicant. See 37 CFR 1.313 and MPEP 1308.

1. ☒ This communication is responsive to *application filed 30 November 2005*.

2. ☒ The allowed claim(s) is/are *1-18*.

3. ☐ Acknowledgment is made of a claim for foreign priority under 35 U.S.C. § 119(a)-(d) or (f).
   a) ☐ All b) ☐ Some* c) ☐ None of the:
      1. ☐ Certified copies of the priority documents have been received.
      2. ☐ Certified copies of the priority documents have been received in Application No. _____ .
      3. ☐ Copies of the certified copies of the priority documents have been received in this national stage application from the International Bureau (PCT Rule 17.2(a)).

   * Certified copies not received: _____.

Applicant has THREE MONTHS FROM THE "MAILING DATE" of this communication to file a reply complying with the requirements noted below. Failure to timely comply will result in ABANDONMENT of this application.
THIS THREE-MONTH PERIOD IS NOT EXTENDABLE.

4. ☐ A SUBSTITUTE OATH OR DECLARATION must be submitted. Note the attached EXAMINER'S AMENDMENT or NOTICE OF INFORMAL PATENT APPLICATION (PTO-152) which gives reason(s) why the oath or declaration is deficient.

5. ☒ CORRECTED DRAWINGS (as "replacement sheets") must be submitted.
   (a) ☐ including changes required by the Notice of Draftsperson's Patent Drawing Review (PTO-948) attached
      1) ☐ hereto or 2) ☐ to Paper No./Mail Date _____.
   (b) ☒ including changes required by the attached Examiner's Amendment / Comment or in the Office action of Paper No./Mail Date _____.

   Identifying indicia such as the application number (see 37 CFR 1.84(c)) should be written on the drawings in the front (not the back) of each sheet. Replacement sheet(s) should be labeled as such in the header according to 37 CFR 1.121(d).

6. ☐ DEPOSIT OF and/or INFORMATION about the deposit of BIOLOGICAL MATERIAL must be submitted. Note the attached Examiner's comment regarding REQUIREMENT FOR THE DEPOSIT OF BIOLOGICAL MATERIAL.

Attachment(s)

1. ☒ Notice of References Cited (PTO-892)
2. ☐ Notice of Draftperson's Patent Drawing Review (PTO-948)
3. ☒ Information Disclosure Statements (PTO/SB/08), Paper No./Mail Date 7/14/06
4. ☐ Examiner's Comment Regarding Requirement for Deposit of Biological Material
5. ☐ Notice of Informal Patent Application
6. ☐ Interview Summary (PTO-413), Paper No./Mail Date _____ .
7. ☒ Examiner's Amendment/Comment
8. ☒ Examiner's Statement of Reasons for Allowance
9. ☐ Other _____.

DETAILED ACTION

EXAMINER'S AMENDMENT

1. An examiner's amendment to the record appears below. Should the changes and/or additions be unacceptable to applicant, an amendment may be filed as provided by 37 CFR 1.312. To ensure consideration of such an amendment, it MUST be submitted no later than the payment of the issue fee. Authorization for this examiner's amendment was given in a telephone interview with Thomas Spath on 26 September 2006. The application has been amended as follows:

Replace Claims 1, 5, 8, and 9 with the following:

1. A rotational test electrode assembly for use in a corrosive fluid environment comprising:

a) a generally cylindrical heat and electrically conductive member having an annular portion, a solid portion, and mounting means for attaching a rotational electrode in close-fitting heat and electrically conductive relation, the electrode being selected from the group consisting of cylindrical and disk electrodes;

b) a heating device positioned inside of the annular portion and in heat exchanging relation with the solid portion of the conductive member;

c) a corrosion resistant external protective member that surrounds a portion of the heat conductive member in close-fitting relationship;

d) electrical terminal means for receiving a plurality of external electrical connectors that is mounted on the protective member opposite the portion of the conductive member on which the rotational electrode is mounted; and

e) driving means to rotate the rotational test electrode assembly.

5. The rotational test electrode assembly of claim 1 which further comprises mounting means proximate the electrical terminal means for coupling the assembly to the rotational drive means.

8. The rotational test electrode assembly of claim 1, wherein the protective member is formed from an electrically insulative polymer.

9. The rotational test electrode assembly of claim 8, wherein the polymer is selected from the group consisting of polytetrafluoroethylene, polyethylene, polypropylene, polyvinyl chloride, and copolymers thereof.

Drawings

2. The drawings filed on 28 April 2005 are acceptable subject to correction of the following: The drawings have numerous reference item numbers and labels that are not readable. The drawings show elements that cannot be easily seen; e.g., the thermistors. The drawings have numerous lines which are broken thus not clearly showing the various embodiments.

3. In order to avoid abandonment of this application, correction is required in reply to the Office action. The correction will not be held in abeyance.

Allowable Subject Matter

4. Claims 1-18 are allowed.

5. The following is an examiner's statement of reasons for allowance:

The prior art teaches several different types of corrodible test electrode assemblies. See, for example, United States Patents 2,519,323 to Shank *et al.*, 3,627,493 to Manley, and 5,006,786 to McKubre *et al.* Shank *et al.* discloses a rotating test assembly. However, there is no teaching or suggestion for providing a heat and electrically conductive portion having a solid portion, an annular portion, and mounting means. Shank *et al.* also does not disclose a heating device. McKubre *et al.* also teaches a rotating test assembly having an annular portion. However, like Shank *et al.*, there is no teaching or suggestion for rotating the test assembly. Manley discloses a static test assembly. While Manley discloses heating means inside an annular member there is no teaching or suggestion to rotate the test assembly.

Any comments considered necessary by applicant must be submitted no later than the payment of the issue fee and, to avoid processing delays, should

preferably accompany the issue fee. Such submissions should be clearly labeled "Comments on Statement of Reasons for Allowance."

Conclusion

6. Any inquiry concerning this communication or earlier communications from the examiner should be directed to David A. Rogers whose telephone number is (571) 272-2205. The examiner can normally be reached on Monday - Friday (0730 - 1600). If attempts to reach the examiner by telephone are unsuccessful, the examiner's supervisor, Hezron E. Williams can be reached on (571) 272-2208. The fax phone number for the organization where this application or proceeding is assigned is 571-273-8300.

7. Information regarding the status of an application may be obtained from the Patent Application Information Retrieval (PAIR) system. Status information for published applications may be obtained from either Private PAIR or Public PAIR. Status information for unpublished applications is available through Private PAIR only. For more information about the PAIR system, see http://pair-direct.uspto.gov. Should you have questions on access to the Private PAIR system, contact the Electronic Business Center (EBC) at 866-217-9197 (toll-free). If you would like assistance from a USPTO Customer Service Representative or access to the automated information system, call 800-786-9199 (IN USA OR CANADA) or 571-272-1000.

dar
26 September 2006

HEZRON WILLIAMS
SUPERVISORY PATENT EXAMINER
TECHNOLOGY CENTER 2800

UNITED STATES PATENT AND TRADEMARK OFFICE

UNITED STATES DEPARTMENT OF COMMERCE
United States Patent and Trademark Office
Address: COMMISSIONER FOR PATENTS
P.O. Box 1450
Alexandria, Virginia 22313-1450
www.uspto.gov

NOTICE OF ALLOWANCE AND FEE(S) DUE

7590 10/02/2006

Abelman Frayne & Schwab
150 East 42nd Street
New York, NY 10017-5612

EXAMINER	
ROGERS, DAVID A	
ART UNIT	PAPER NUMBER
2856	

DATE MAILED: 10/02/2006

APPLICATION NO.	FILING DATE	FIRST NAMED INVENTOR	ATTORNEY DOCKET NO.	CONFIRMATION NO.
10/533,490	11/30/2005	Abdulghani Jaralla	206,973	4103

TITLE OF INVENTION: CORROSION TESTING APPARATUS

APPLN. TYPE	SMALL ENTITY	ISSUE FEE DUE	PUBLICATION FEE DUE	PREV. PAID ISSUE FEE	TOTAL FEE(S) DUE	DATE DUE
nonprovisional	NO	$1400	$300	$0	$1700	01/02/2007

THE APPLICATION IDENTIFIED ABOVE HAS BEEN EXAMINED AND IS ALLOWED FOR ISSUANCE AS A PATENT. PROSECUTION ON THE MERITS IS CLOSED. THIS NOTICE OF ALLOWANCE IS NOT A GRANT OF PATENT RIGHTS. THIS APPLICATION IS SUBJECT TO WITHDRAWAL FROM ISSUE AT THE INITIATIVE OF THE OFFICE OR UPON PETITION BY THE APPLICANT. SEE 37 CFR 1.313 AND MPEP 1308.

THE ISSUE FEE AND PUBLICATION FEE (IF REQUIRED) MUST BE PAID WITHIN THREE MONTHS FROM THE MAILING DATE OF THIS NOTICE OR THIS APPLICATION SHALL BE REGARDED AS ABANDONED. THIS STATUTORY PERIOD CANNOT BE EXTENDED. SEE 35 U.S.C. 151. THE ISSUE FEE DUE INDICATED ABOVE DOES NOT REFLECT A CREDIT FOR ANY PREVIOUSLY PAID ISSUE FEE IN THIS APPLICATION. IF AN ISSUE FEE HAS PREVIOUSLY BEEN PAID IN THIS APPLICATION (AS SHOWN ABOVE), THE RETURN OF PART B OF THIS FORM WILL BE CONSIDERED A REQUEST TO REAPPLY THE PREVIOUSLY PAID ISSUE FEE TOWARD THE ISSUE FEE NOW DUE.

HOW TO REPLY TO THIS NOTICE:

I. Review the SMALL ENTITY status shown above.

If the SMALL ENTITY is shown as YES, verify your current SMALL ENTITY status:

A. If the status is the same, pay the TOTAL FEE(S) DUE shown above.

B. If the status above is to be removed, check box 5b on Part B - Fee(s) Transmittal and pay the PUBLICATION FEE (if required) and twice the amount of the ISSUE FEE shown above, or

If the SMALL ENTITY is shown as NO:

A. Pay TOTAL FEE(S) DUE shown above, or

B. If applicant claimed SMALL ENTITY status before, or is now claiming SMALL ENTITY status, check box 5a on Part B - Fee(s) Transmittal and pay the PUBLICATION FEE (if required) and 1/2 the ISSUE FEE shown above.

II. PART B - FEE(S) TRANSMITTAL, or its equivalent, must be completed and returned to the United States Patent and Trademark Office (USPTO) with your ISSUE FEE and PUBLICATION FEE (if required). If you are charging the fee(s) to your deposit account, section "4b" of Part B - Fee(s) Transmittal should be completed and an extra copy of the form should be submitted. If an equivalent of Part B is filed, a request to reapply a previously paid issue fee must be clearly made, and delays in processing may occur due to the difficulty in recognizing the paper as an equivalent of Part B.

III. All communications regarding this application must give the application number. Please direct all communications prior to issuance to Mail Stop ISSUE FEE unless advised to the contrary.

IMPORTANT REMINDER: Utility patents issuing on applications filed on or after Dec. 12, 1980 may require payment of maintenance fees. It is patentee's responsibility to ensure timely payment of maintenance fees when due.

PTOL-85 (Rev. 07/06) Approved for use through 04/30/2007.

PART B - FEE(S) TRANSMITTAL

Complete and send this form, together with applicable fee(s), to: Mail **Mail Stop ISSUE FEE**
Commissioner for Patents
P.O. Box 1450
Alexandria, Virginia 22313-1450
or Fax (571)-273-2885

INSTRUCTIONS: This form should be used for transmitting the ISSUE FEE and PUBLICATION FEE (if required). Blocks 1 through 5 should be completed where appropriate. All further correspondence including the Patent, advance orders and notification of maintenance fees will be mailed to the current correspondence address as indicated unless corrected below or directed otherwise in Block 1, by (a) specifying a new correspondence address; and/or (b) indicating a separate "FEE ADDRESS" for maintenance fee notifications.

CURRENT CORRESPONDENCE ADDRESS (Note: Use Block 1 for any change of address)

7590 10/02/2006

Abelman Frayne & Schwab
150 East 42nd Street
New York, NY 10017-5612

Note: A certificate of mailing can only be used for domestic mailings of the Fee(s) Transmittal. This certificate cannot be used for any other accompanying papers. Each additional paper, such as an assignment or formal drawing, must have its own certificate of mailing or transmission.

Certificate of Mailing or Transmission

I hereby certify that this Fee(s) Transmittal is being deposited with the United States Postal Service with sufficient postage for first class mail in an envelope addressed to the Mail Stop ISSUE FEE address above, or being facsimile transmitted to the USPTO (571) 273-2885, on the date indicated below.

(Depositor's name)
(Signature)
(Date)

APPLICATION NO.	FILING DATE	FIRST NAMED INVENTOR	ATTORNEY DOCKET NO.	CONFIRMATION NO.
10/533,490	11/30/2005	Abdulghani Jaralla	206,973	4103

TITLE OF INVENTION: CORROSION TESTING APPARATUS

APPLN. TYPE	SMALL ENTITY	ISSUE FEE DUE	PUBLICATION FEE DUE	PREV. PAID ISSUE FEE	TOTAL FEE(S) DUE	DATE DUE
nonprovisional	NO	$1400	$300	$0	$1700	01/02/2007

EXAMINER	ART UNIT	CLASS-SUBCLASS
ROGERS, DAVID A	2856	073-086000

1. Change of correspondence address or indication of "Fee Address" (37 CFR 1.363).

☐ Change of correspondence address (or Change of Correspondence Address form PTO/SB/122) attached.

☐ "Fee Address" indication (or "Fee Address" Indication form PTO/SB/47; Rev 03-02 or more recent) attached. **Use of a Customer Number is required.**

2. For printing on the patent front page, list

(1) the names of up to 3 registered patent attorneys or agents OR, alternatively, 1_____

(2) the name of a single firm (having as a member a registered attorney or agent) and the names of up to 2 registered patent attorneys or agents. If no name is listed, no name will be printed. 2_____ 3_____

3. ASSIGNEE NAME AND RESIDENCE DATA TO BE PRINTED ON THE PATENT (print or type)

PLEASE NOTE: Unless an assignee is identified below, no assignee data will appear on the patent. If an assignee is identified below, the document has been filed for recordation as set forth in 37 CFR 3.11. Completion of this form is NOT a substitute for filing an assignment.

(A) NAME OF ASSIGNEE (B) RESIDENCE: (CITY and STATE OR COUNTRY)

Please check the appropriate assignee category or categories (will not be printed on the patent) : ☐ Individual ☐ Corporation or other private group entity ☐ Government

4a. The following fee(s) are submitted:

☐ Issue Fee
☐ Publication Fee (No small entity discount permitted)
☐ Advance Order - # of Copies _____

4b. Payment of Fee(s): **(Please first reapply any previously paid issue fee shown above)**

☐ A check is enclosed.
☐ Payment by credit card. Form PTO-2038 is attached.
☐ The Director is hereby authorized to charge the required fee(s), any deficiency, or credit any overpayment, to Deposit Account Number _____ (enclose an extra copy of this form).

5. **Change in Entity Status** (from status indicated above)

☐ a. Applicant claims SMALL ENTITY status. See 37 CFR 1.27. ☐ b. Applicant is no longer claiming SMALL ENTITY status. See 37 CFR 1.27(g)(2).

NOTE: The Issue Fee and Publication Fee (if required) will not be accepted from anyone other than the applicant; a registered attorney or agent; or the assignee or other party in interest as shown by the records of the United States Patent and Trademark Office.

Authorized Signature _____ Date _____

Typed or printed name _____ Registration No. _____

This collection of information is required by 37 CFR 1.311. The information is required to obtain or retain a benefit by the public which is to file (and by the USPTO to process) an application. Confidentiality is governed by 35 U.S.C. 122 and 37 CFR 1.14. This collection is estimated to take 12 minutes to complete, including gathering, preparing, and submitting the completed application form to the USPTO. Time will vary depending upon the individual case. Any comments on the amount of time you require to complete this form and/or suggestions for reducing this burden, should be sent to the Chief Information Officer, U.S. Patent and Trademark Office, U.S. Department of Commerce, P.O. Box 1450, Alexandria, Virginia 22313-1450. DO NOT SEND FEES OR COMPLETED FORMS TO THIS ADDRESS. SEND TO: Commissioner for Patents, P.O. Box 1450, Alexandria, Virginia 22313-1450.

Under the Paperwork Reduction Act of 1995, no persons are required to respond to a collection of information unless it displays a valid OMB control number.

UNITED STATES PATENT AND TRADEMARK OFFICE

UNITED STATES DEPARTMENT OF COMMERCE
United States Patent and Trademark Office
Address: COMMISSIONER FOR PATENTS
P.O. Box 1450
Alexandria, Virginia 22313-1450
www.uspto.gov

APPLICATION NO.	FILING DATE	FIRST NAMED INVENTOR	ATTORNEY DOCKET NO.	CONFIRMATION NO.
10/533,490	11/30/2005	Abdulghani Jaralla	206,973	4103

7590 10/02/2006

Abelman Frayne & Schwab
150 East 42nd Street
New York, NY 10017-5612

EXAMINER
ROGERS, DAVID A

ART UNIT	PAPER NUMBER
2856	

DATE MAILED: 10/02/2006

Determination of Patent Term Adjustment under 35 U.S.C. 154 (b)
(application filed on or after May 29, 2000)

The Patent Term Adjustment to date is 0 day(s). If the issue fee is paid on the date that is three months after the mailing date of this notice and the patent issues on the Tuesday before the date that is 28 weeks (six and a half months) after the mailing date of this notice, the Patent Term Adjustment will be 0 day(s).

If a Continued Prosecution Application (CPA) was filed in the above-identified application, the filing date that determines Patent Term Adjustment is the filing date of the most recent CPA.

Applicant will be able to obtain more detailed information by accessing the Patent Application Information Retrieval (PAIR) WEB site (http://pair.uspto.gov).

Any questions regarding the Patent Term Extension or Adjustment determination should be directed to the Office of Patent Legal Administration at (571)-272-7702. Questions relating to issue and publication fee payments should be directed to the Customer Service Center of the Office of Patent Publication at 1-(888)-786-0101 or (571)-272-4200.

PTOL-85 (Rev. 07/06) Approved for use through 04/30/2007.

OIPE IAP89
JAN 04 2007
PATENT & TRADEMARK OFFICE

ABELMAN, FRAYNE & SCHWAB
Attorneys at Law
666 Third Avenue
New York, New York 10017-5621

Telephone: (212) 949-9022
Facsimile: (212) 949-9190
e-mail@lawabel.com

January 3, 2007

Mail Stop Issue Fee
Commissioner for Patents
P.O. Box 1450
Alexandria, VA 22313-1450

Sir/Madam:

We enclose our check in payment of the issue fee on the following application.

APPLICANT: Jaralla, Abdulghani CASE: 206,973

SERIAL NO.: 10/533,490 FILED: November 30, 2005

TITLE: CORROSION TESTING APPARATUS

ASSIGNED TO: Saudi Arabian Oil Company

ALLOWED: October 2, 2006 with 18 claims

ISSUE FEE DUE: January 2, 2007 AMOUNT: $1700.00 (Incl. Pub. Fee)

PRIORITY: [X] Country: U.S. Appln. No. 60/427,136 Filed: November 18, 2002

SMALL ENTITY STATUS: NO

We await the receipt of the issue notification and the Letters Patent Document.

TES:so

Respectfully submitted,

Thomas E. Spath
Reg. No. 25,928

Enclosed Check No. 19961

"EXPRESS MAIL" Label No. ER059677689US Date of Deposited: January 3, 2007 This correspondence is being Deposited with the United States. Postal Service "Express Mail Post Office to Addressee" service under 37 CFR § 1.10 on the date indicated above and addressed to: Commissioner for Patents P.O. Box 1450 Alexandria, VA 22313-1450

01-05-07

IFW B

PART B - FEE(S) TRANSMITTAL

Complete and send this form, together with applicable fee(s), to: Mail Mail Stop ISSUE FEE
Commissioner for Patents
P.O. Box 1450
Alexandria, Virginia 22313-1450
or Fax (571)-273-2885

INSTRUCTIONS: This form should be used for transmitting the ISSUE FEE and PUBLICATION FEE (if required). Blocks 1 through 5 should be completed where appropriate. All further correspondence including the Patent, advance orders and notification of maintenance fees will be mailed to the current correspondence address as indicated unless corrected below or directed otherwise in Block 1, by (a) specifying a new correspondence address; and/or (b) indicating a separate "FEE ADDRESS" for maintenance fee notifications.

CURRENT CORRESPONDENCE ADDRESS (Note: Use Block 1 for any change of address)

7590 10/02/2006

ABELMAN, FRAYNE & SCHWAB
Attorneys at Law
666 Third Avenue., 10th Floor
New York, NY 10017

OIPE IAP86 JAN 04 2007 PATENT & TRADEMARK OFFICE

Note: A certificate of mailing can only be used for domestic mailings of the Fee(s) Transmittal. This certificate cannot be used for any other accompanying papers. Each additional paper, such as an assignment or formal drawing, must have its own certificate of mailing or transmission.

Certificate of Mailing or Transmission
I hereby certify that this Fee(s) Transmittal is being deposited with the United States Postal Service with sufficient postage for first class mail in an envelope addressed to the Mail Stop ISSUE FEE address above, or being facsimile transmitted to the USPTO (571) 273-2885, on the date indicated below.

Thomas E. Spath (Depositor's name)
Thomas E. Spath (Signature)
January 3, 2007 (Date)

APPLICATION NO.	FILING DATE	FIRST NAMED INVENTOR	ATTORNEY DOCKET NO.	CONFIRMATION NO.
10/533,490	11/30/2005	Abdulghani Jaralla	206,973	4103

TITLE OF INVENTION: CORROSION TESTING APPARATUS

01/08/2007 TTHANE 00000052 10533490

01 FC:1501 1400.00 OP
02 FC:1504 300.00 OP

APPLN. TYPE	SMALL ENTITY	ISSUE FEE DUE	PUBLICATION FEE DUE	PREV. PAID ISSUE FEE	TOTAL FEE(S) DUE	DATE DUE
nonprovisional	NO	$1400	$300	$0	$1700	01/02/2007

EXAMINER	ART UNIT	CLASS-SUBCLASS
ROGERS, DAVID A	2856	073-086000

1. Change of correspondence address or indication of "Fee Address" (37 CFR 1.363).
☐ Change of correspondence address (or Change of Correspondence Address form PTO/SB/122) attached.
☐ "Fee Address" indication (or "Fee Address" Indication form PTO/SB/47; Rev 03-02 or more recent) attached. **Use of a Customer Number is required.**

2. For printing on the patent front page, list
(1) the names of up to 3 registered patent attorneys or agents OR, alternatively,
(2) the name of a single firm (having as a member a registered attorney or agent) and the names of up to 2 registered patent attorneys or agents. If no name is listed, no name will be printed.

1 ABELMAN, FRAYNE &
2 SCHWAB
3

3. ASSIGNEE NAME AND RESIDENCE DATA TO BE PRINTED ON THE PATENT (print or type)

PLEASE NOTE: Unless an assignee is identified below, no assignee data will appear on the patent. If an assignee is identified below, the document has been filed for recordation as set forth in 37 CFR 3.11. Completion of this form is NOT a substitute for filing an assignment.

(A) NAME OF ASSIGNEE
SAUDI ARABIAN OIL COMPANY

(B) RESIDENCE: (CITY and STATE OR COUNTRY)
Dhahran 31311, Saudi Arabia

Please check the appropriate assignee category or categories (will not be printed on the patent) : ☐ Individual ☒ Corporation or other private group entity ☐ Government

4a. The following fee(s) are submitted:
☒ Issue Fee
☒ Publication Fee (No small entity discount permitted)
☐ Advance Order - # of Copies _____

4b. Payment of Fee(s): **(Please first reapply any previously paid issue fee shown above)**
☒ A check is enclosed.
☐ Payment by credit card. Form PTO-2038 is attached.
☒ The Director is hereby authorized to charge the required fee(s), any deficiency, or credit any overpayment, to Deposit Account Number 01-0035 (enclose an extra copy of this form).

5. **Change in Entity Status** (from status indicated above)
☐ a. Applicant claims SMALL ENTITY status. See 37 CFR 1.27.
☐ b. Applicant is no longer claiming SMALL ENTITY status. See 37 CFR 1.27(g)(2).

NOTE: The Issue Fee and Publication Fee (if required) will not be accepted from anyone other than the applicant; a registered attorney or agent; or the assignee or other party in interest as shown by the records of the United States Patent and Trademark Office.

Authorized Signature Thomas E. Spath Date January 3, 2007

Typed or printed name Thomas E. Spath Registration No. 25,928

This collection of information is required by 37 CFR 1.311. The information is required to obtain or retain a benefit by the public which is to file (and by the USPTO to process) an application. Confidentiality is governed by 35 U.S.C. 122 and 37 CFR 1.14. This collection is estimated to take 12 minutes to complete, including gathering, preparing, and submitting the completed application form to the USPTO. Time will vary depending upon the individual case. Any comments on the amount of time you require to complete this form and/or suggestions for reducing this burden, should be sent to the Chief Information Officer, U.S. Patent and Trademark Office, U.S. Department of Commerce, P.O. Box 1450, Alexandria, Virginia 22313-1450. DO NOT SEND FEES OR COMPLETED FORMS TO THIS ADDRESS. SEND TO: Commissioner for Patents, P.O. Box 1450, Alexandria, Virginia 22313-1450.

Under the Paperwork Reduction Act of 1995, no persons are required to respond to a collection of information unless it displays a valid OMB control number.

OIPE IAP89
JAN 04 2007
PATENT & TRADEMARK OFFICE

Attorney Docket 206,973

IN THE UNITED STATES PATENT AND TRADEMARK OFFICE

APPLICANT: Jaralla, Abdulghani

SERIAL NO.: 10/533,490

FILED: November 30, 2005

TITLE: CORROSION TESTING APPARATUS

Group No.: 2856

Examiner: Rogers, David A.

Date: January 3, 2007

SUBMISSION OF FORMAL DRAWINGS

Commissioner for Patents
P.O. Box 1450
Alexandria, VA 22313-1450

Dear Sir:

The above-identified application was filed with informal drawings. Applicant hereby encloses 4 sheets of formal drawings

The Patent Office is authorized to debit any expenses incurred to the Deposit Account No. 01-0035 of the undersigned.

Respectfully submitted,

Thomas E. Spath

Thomas E. Spath
Attorney for Applicants
Reg. No. 25,928

ABELMAN, FRAYNE & SCHWAB
666 Third Avenue, 10th Floor
New York, New York 10017-5621
(212) 949-9022

OIPE IAP89
JAN 04 2007
PATENT & TRADEMARK OFFICE

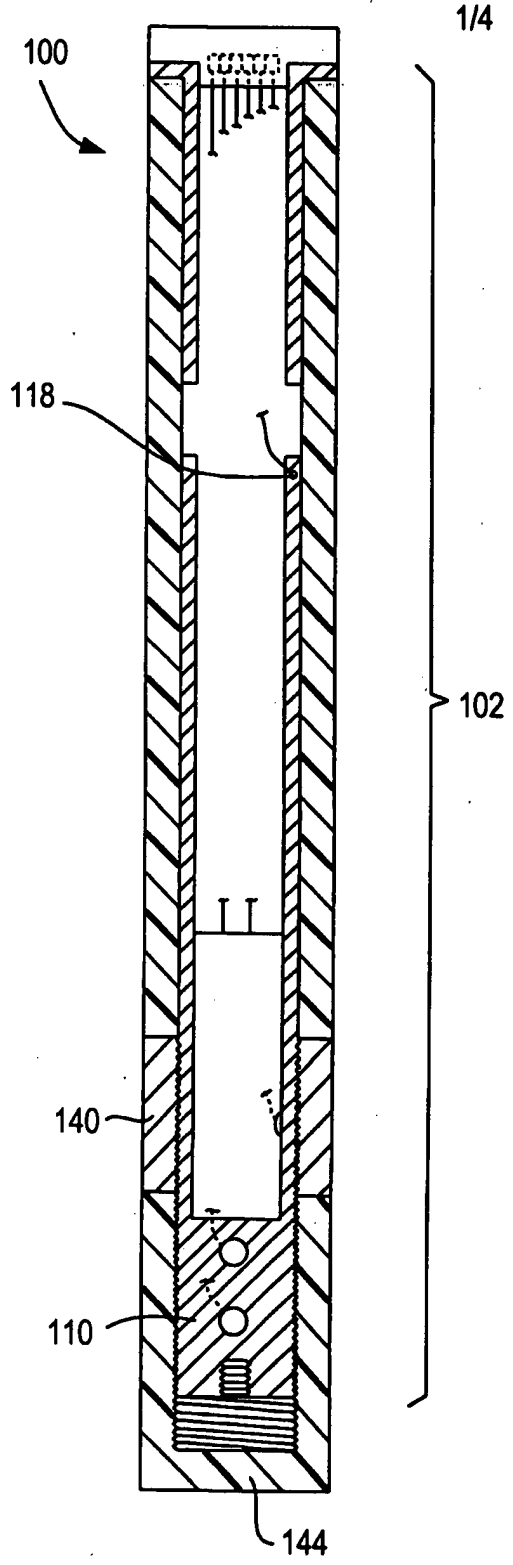

FIG. 1

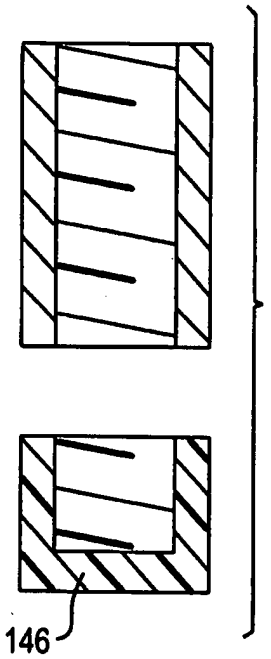

FIG. 1A

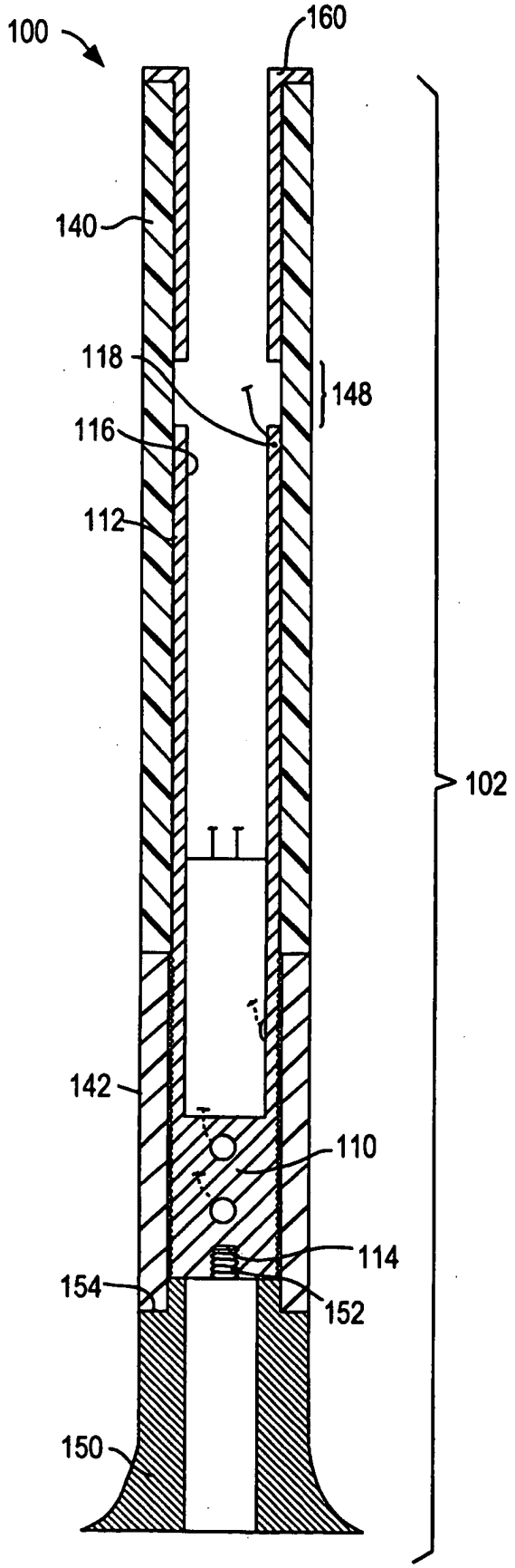

FIG. 2

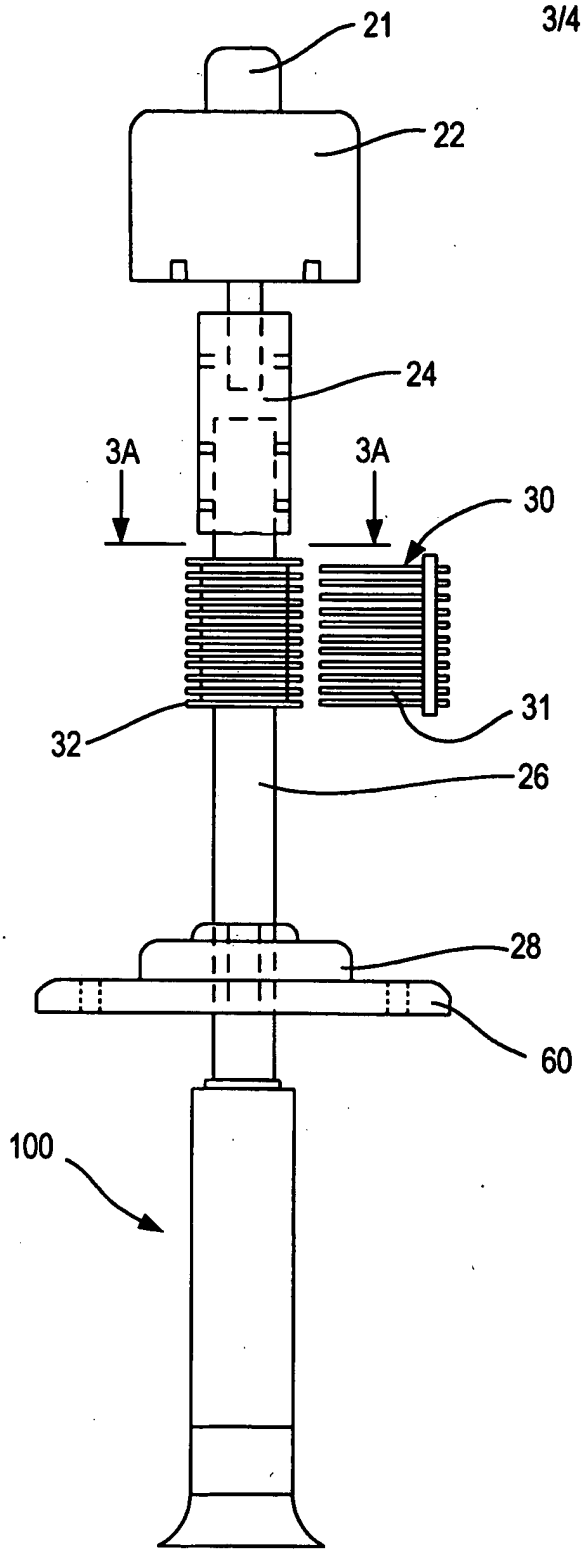

FIG. 3

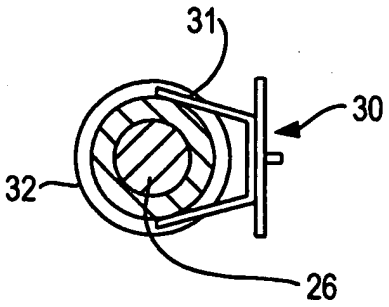

FIG. 3A

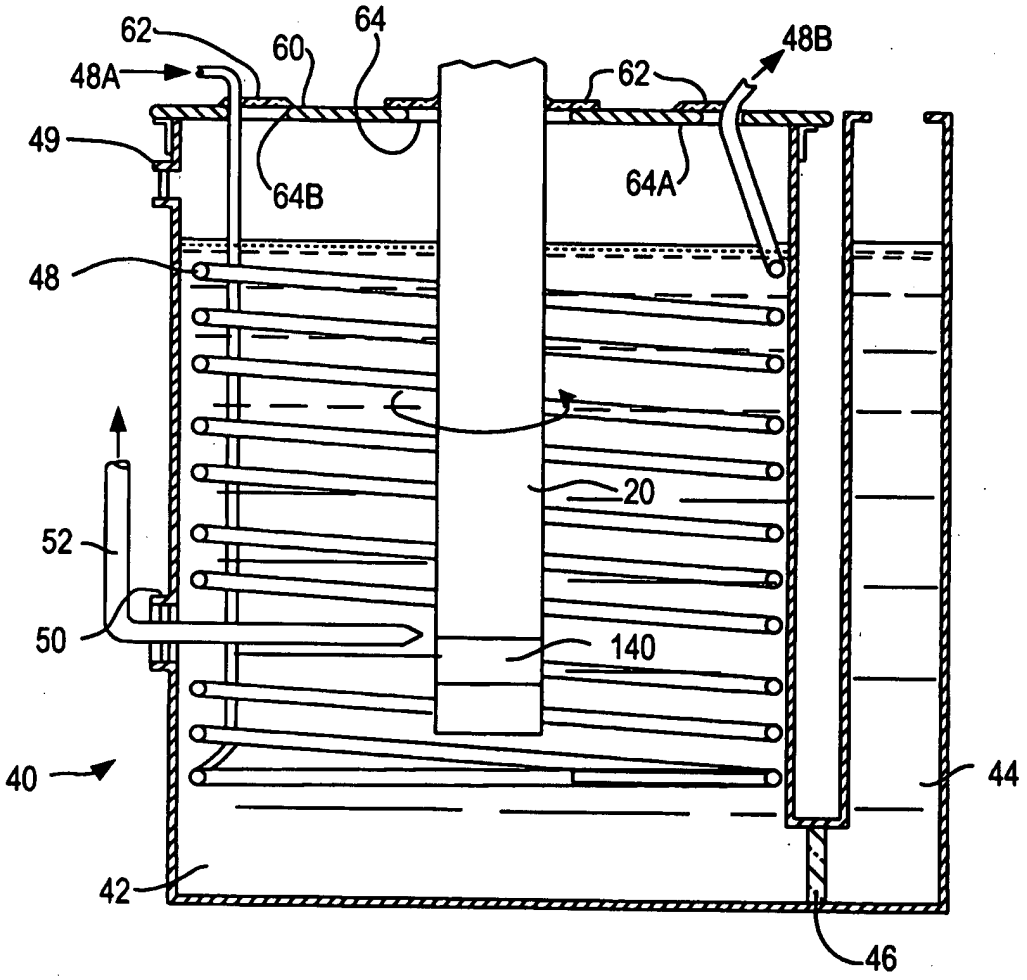

FIG. 4

RECEIVED
CENTRAL FAX CENTER
MAR 19 2007

ATTORNEY DOCKET NO. 206,973

IN THE UNITED STATES PATENT AND TRADEMARK OFFICE

Applicant:	JARALLA, Abdulghani	Examiner:	Rogers, David A.
Appl. No.:	10/533,490	Art Unit:	2856
Filing Date:	November 30, 2005		
Title:	CORROSION TESTING APPARATUS		

STATEMENT OF FILING BY TELEFACSIMILE
This correspondence is being transmitted to the Office of Petitions of the United States Patent Office on March 19, 2007 at 571 273-8300.

REQUEST FOR RECONSIDERATION

Mailstop - Petitions
Commissioner for Patents
P. O. Box 1450
Alexandria, VA 22313-1450

Date: March 19, 2007

Attention: Petitions/USPTO

Sir:

This is a request for reconsideration of the decision mailed March 12, 2007 dismissing the Petition Under 37 C.F.R. §1.10(c) to correct mail date of Issue Fee.

In support of this request, there is being submitted herewith copies of the following documents:

1) "Express Mail" Airwaybill no. ER059677689US clearly indicating the date of January 3, 2007 in the United States Postal Service round stamp; and

2) "Closing of the United States Patent and Trademark Office on Tuesday January 2, 2007", dated February 28, 2007 and signed by Jon W. Dudas, Undersecretary of Commerce for Intellectual Property, and confirming that any paper or fee due on Tuesday, January 2, 2007, will be considered as timely filed, if mailed on

RECEIVED
CENTRAL FAX CENTER
MAR 1 9 2007

Wednesday, January 3, 2007.

Reconsideration is respectfully requested.

Respectfully submitted,

ABELMAN, FRAYNE & SCHWAB
Attorneys for Applicant

Joseph J. Catanzaro
Reg. No. 25,837

ABELMAN, FRAYNE & SCHWAB
666 Third Avenue
New York, New York 10017-5621
Tel: (212) 949-9022
Fax: (212) 949-9190

Enclosures: Copy of Express Mail Airwaybill No. ER059677689US,
Dated January 3, 2007
Closing of the United States Patent and Trademark Office
on Tuesday January 2, 2007"
Dated February 28, 2007

PAGE 2/4 * RCVD AT 3/19/2007 6:23:51 PM [Eastern Daylight Time] * SVR:USPTO-EFXRF-6/35 * DNIS:2738300 * CSID:212 949 9190 * DURATION (mm-ss):01-00

RECEIVED
CENTRAL FAX CENTER
MAR 1 9 2007

Closing of the United States Patent and Trademark Office on Tuesday, January 2, 2007

In view of the official closing of the Federal Government offices in the Washington, D.C. metropolitan area, including the United States Patent and Trademark Office (USPTO), on Tuesday, January 2, 2007, the day proclaimed by President Bush as a National Day of Mourning, the United States Patent and Trademark Office will consider Tuesday, January 2, 2007, a "Federal holiday within the District of Columbia" under 35 U.S.C. § 21 and 37 C.F.R. §§ 1.6, 1.7, 1.9, 2.2(d), 2.195, and 2.196. Any action or fee due on Tuesday, January 2, 2007, will be considered as timely for the purposes of, e.g., 35 U.S.C. §§ 119, 120, 133 and 151, if the action is taken, or the fee is paid, on the next succeeding business day on which the USPTO was open, that is, Wednesday, January 3, 2007.

37 C.F.R. §§ 1.6(a)(2) and 2.195(a)(4) provide that correspondence deposited as Express Mail in accordance with 37 C.F.R. § 1.10 or 2.198 will be considered as filed on the date of deposit with the United States Postal Service (USPS). Thus, any paper or fee properly deposited in accordance with 37 C.F.R. § 1.10 or 2.198 with the Express Mail service of the USPS on Tuesday, January 2, 2007 (that is, as shown by a "date-in" of Tuesday, January 2, 2007, on the Express Mail mailing label) will be considered filed in the USPTO on its date of deposit in the Express Mail service of the USPS.

37 C.F.R. § 2.195(a)(2) provides that trademark-related correspondence transmitted electronically to the USPTO will be considered filed in the USPTO on the date the USPTO receives the electronic transmission. Thus, trademark-related correspondence transmitted electronically on Tuesday, January 2, 2007, will be considered filed in the USPTO on the date the USPTO received the electronic transmission. Correspondence successfully received by the USPTO through the patent Electronic Filing System will receive the date as indicated on the Acknowledgment Receipt.

2/28/07
Date

Jon W. Dudas
JON W. DUDAS
Under Secretary of Commerce for Intellectual Property and
Director of the United States Patent and Trademark Office

Customer Copy
Label 11-B September 2002

ER 059677689 US

EXPRESS MAIL
UNITED STATES POSTAL SERVICE

Post Office To Addressee

ORIGIN (POSTAL USE ONLY)

PO ZIP Code	Day of Delivery ☐ Next ☐ Second	Next Rate Envelope ☐
Date In Mo. Day Year	☐ 12 Noon ☐ 3 PM	Postage $
Time In ☐ AM ☐ PM	Military ☐ 2nd Day ☐ 3rd Day	Return Receipt Fee
Weight lbs. ozs.	Int'l Alpha Country Code	COD Fee $ / Insurance Fee
No Delivery ☐ Weekend ☐ Holiday	Acceptance Clerk Initials	Total Postage & Fees $

DELIVERY (POSTAL USE ONLY)

Delivery Attempt Mo. Day	Time ☐ AM ☐ PM	Employee Signature
Delivery Attempt Mo. Day	Time ☐ AM ☐ PM	Employee Signature
Delivery Date Mo. Day	Time ☐ AM ☐ PM	Employee Signature

CUSTOMER USE ONLY

PAYMENT BY ACCOUNT
Express Mail Corporate Acct. No. X 093347
Federal Agency Acct. No. or Postal Service Acct. No.

NO DELIVERY ☐ Weekend ☐ Holiday

FROM: (PLEASE PRINT) PHONE ( )

ABELMAN, FRAYNE & SCHWAB
666 Third Avenue
New York, New York 10017

TO: (PLEASE PRINT) PHONE ( )

COMMISSIONER FOR PATENTS
P.O. BOX 1450
ALEXANDRIA, VA 22313-1450

ZIP + 4

FOR PICKUP OR TRACKING CALL 1-800-222-1811
www.usps.com

PRESS HARD. You are making 3 copies.

BEST AVAILABLE

RECEIVED
CENTRAL FAX CENTER
JAN 16 2007

ABELMAN, FRAYNE & SCHWAB
Attorneys at Law
666 Third Avenue
New York, New York 10017
Telephone: (212) 949-9022
Facsimile: (212) 949-9190
e-mail@lawabel.com

BEST AVAILABLE COPY

ATTORNEY DOCKET NO. 206,973

IN THE UNITED STATES PATENT AND TRADEMARK OFFICE

Applicant: Jaralla, Abdulghani

Examiner: Rogers, David A.

Appln. No.: 10/533,490

Art Unit: 2856

Filing Date: November 30, 2005

Title: CORROSION TESTING APPARATUS

STATEMENT OF FILING BY TELEFACSIMILE
This correspondence is being transmitted to the Office of Petitions of the United States Patent Office on at 571 273-8300.

PETITION UNDER 37 C.F.R. §1.10(e) TO CORRECT MAIL DATE OF ISSUE FEE

Mailstop - Petitions
Commissioner for Patents
P. O. Box 1450
Alexandria, VA 22313-1450

Date: January 15, 2007

Attention: Petitions-USPTO

Sir:

Applicant respectfully requests that the mailing date of the Issue Fee be corrected in the official records of the Patent Office to indicate that the correct mailing date of the submission of the Issue Fee for this application is: January 3, 2007

Evidence in support of this Petition is provided below.

BEST AVAILABLE COPY

REMARKS

This paper was submitted to the USPTO via Express Mail on January 3, 2007. The Statement of Filing by Express Mail Pursuant to 37 C.F.R. §1.10 with the Express Mail No. ER059677689US was placed on the document and on a postcard receipt prior to the original mailing. Notwithstanding the foregoing, as shown by the attached true copy of our postcard receipt, the date stamped by the USPTO mailroom on the postcard is January 4, 2007.

The sealed Express Mail envelope was delivered by hand to a U.S. Postal Service office in New York City and the Express Mail Mailing Label was correctly completed with the date of deposit date-stamped by a U.S. Postal Service employee. In accordance with established procedure, the "Customer Copy" of the multi-part U.S. Postal Service Express Mail Label was returned to our firm.

Attached is a true copy of the "Express Mailing Label" for this submission showing the "date-in" entry of January 3, 2007 in the round stamp made by an employee of the U.S. Postal Service. Also attached is a letter dated October 24, 2006 from the United States Postal Service, providing an explanation of the "Date-in" postal procedures, and confirming that the date appearing in the round stamp is the actual date on which the submission was made to the Express Mail Service prior to the last scheduled pickup.

Accordingly, Applicant respectfully requests by this Petition that the mailing date accorded this application be corrected to read: January 3, 2007 on the USPTO records.

No fee is believed to be due in connection with this Petition. Please charge any fee(s) which may be due for filing this Petition and credit any overpayments to our Deposit Account No. 01-0035.

Respectfully submitted,

ABELMAN, FRAYNE & SCHWAB
Attorney for Applicant(s)

Thomas E. Spath

Thomas E. Spath
Reg. 25,928

BEST AVAILABLE COPY

ABELMAN, FRAYNE & SCHWAB
666 Third Avenue
New York, New York 10017-5621
Tel: (212) 949-9022
Fax: (212) 949-9190

Enclosures: Express Mail Mailing Label Dated ER059677689US
U.S. Postal Service Letter Dated October 24, 2006
Copy of filed postcard
Copy of stamped postcard

DIRECTOR OF THE U.S. PATENT
AND TRADEMARK OFFICE

BEST AVAILABLE COPY

Date Stamp as acknowledgement
of receipt of:

Applicant(s): JARALLA
Serial No.: 10/533,490
Control No.: 206,973

1) Cover letter
2) Issue fee transmittal
3) Sub. of formal drawings (4 pgs.)
4) Change of address
5) Postcard receipt
6) Check - $ 1700.00 (large entity)

Check no. 19961

Initials: TES/so
Date Mailed: January 3, 2007

Express Mail No.: ER059677689US

19961

ABELMAN, FRAYNE, & SCHWAB
COMMISSIONER ACCOUNT
666 THIRD AVENUE
NEW YORK, NY 10017

1-777-260

DATE 01/03/07

PAY TO THE ORDER OF COMMISSIONER OF PATENTS AND TRADEMARK $ 1,700.00

THE SUM 1700 DOLS 00 CTS DOLLARS

STERLING NATIONAL BANK
622 Third Avenue
New York, NY 10017-6707

COMMISSIONER OF PATENTS AND TRADEMARK

FOR R2038

Sheila Berkofsky

⑈019961⑈ [redacted] 0811[redacted]

BEST AVAILABLE COPY

DIRECTOR OF THE U.S. PATENT
AND TRADEMARK OFFICE

Date Stamp as acknowledgement
of receipt of:

OIPE IAP89
JAN 04 2007
PATENT & TRADEMARK OFFICE

Applicant(s): JARALLA
Serial No.: 10/533,490
Control No.: 206.973

1) Cover letter
2) Issue fee transmittal
3) Sub. of formal drawings (4 pgs.)
4) Change of address
5) Postcard receipt
6) Check - $ 1700.00 (large entity)

Check no. 19961

Initials: TES/so
Date Mailed: January 3, 2007

Express Mail No.: ER059677689US

BEST AVAILABLE COPY

Customer Copy
Label 11-B September 2002

ER 059677689 US

EXPRESS MAIL
UNITED STATES POSTAL SERVICE

Post Office To Addressee

ORIGIN (POSTAL USE ONLY)

PO ZIP Code	Day of Delivery ☐ Next ☐ Second	Flat Rate Envelope ☐
Date In Mo. Day Year	☐ 12 Noon ☐ 3 PM	Postage $
Time In ☐ AM ☐ PM	Military ☐ 2nd Day ☐ 3rd Day	Return Receipt Fee
Weight lbs. ozs.	Int'l Alpha Country Code	COD Fee $ / Insurance Fee
No Delivery ☐ Weekend ☐ Holiday	Acceptance Clerk Initials	Total Postage & Fees $

DELIVERY (POSTAL USE ONLY)

Delivery Attempt Mo. Day	Time ☐ AM ☐ PM	Employee Signature
Delivery Attempt Mo. Day	Time ☐ AM ☐ PM	Employee Signature
Delivery Date Mo. Day	Time ☐ AM ☐ PM	Employee Signature

CUSTOMER USE ONLY

PAYMENT BY ACCOUNT
Express Mail Corporate Acct. No.
093347
Federal Agency Acct. No. or Postal Service Acct. No.

☐ WAIVER OF SIGNATURE (Domestic Only)
Additional merchandise insurance is void if waiver of signature is requested.
I wish delivery to be made without obtaining signature or addressee or addressee's agent (if delivery employee judges that article can be left in secure location) and I authorize that delivery employee's signature constitutes valid proof of delivery.

NO DELIVERY ☐ Weekend ☐ Holiday

Customer Signature

FROM: (PLEASE PRINT) PHONE ( )

ABELMAN, FRAYNE & SCHWAB
666 Third Avenue
New York, New York 10017

TO: (PLEASE PRINT) PHONE ( )

COMMISSIONER FOR PATENTS
P.O. BOX 1450
ALEXANDRIA, VA 22313-1450

ZIP + 4

FOR PICKUP OR TRACKING CALL 1-800-222-1811
www.usps.com
EMS
PRESS HARD. You are making 3 copies.

UNITED STATES POSTAL SERVICE

October 24, 2006

BEST AVAILABLE COPY

Mr. Joseph J. Catanzaro
Abelman, Frayne, & Schwab
666 Third Avenue
New York, NY 10017

Philip Grant, Supv. Customer Service
U.S. Postal Service
Grand Central Station
New York, NY 10017

Re: Express Mail Processing procedure

Dear Mr. Catanzaro,

I am writing you this letter to confirm our conversation of today regarding the processing of your Express Mail. The date postmarked on your copy of the Express Mail receipt is our confirmation of receipt for that date, which is the "date-in" prior to the last scheduled pickup. The mail is then sent to our Express Mail processing unit where it is entered into the tracking system. If the Express Mail piece is received before the close of business on a particular day it may show a processing date of the next day in the tracking system. This should not be considered as the official "date-in" of receipt at the Post Office. The official "date-in" receipt is the date Postmarked in the round stamp on your customer copy. Please feel free to call me if you need any further assistance.

Sincerely,

Philip Grant
Customer Service Supervisor
Grand Central Station, New York
(212) 330-5790 – (after 2pm daily)

Pothier, Denise

From: U.S._Postal_Service_ [U.S._Postal_Service@usps.com]
Sent: Wednesday, May 30, 2007 1:39 PM
To: Pothier, Denise
Subject: U.S. Postal Service Track & Confirm email Restoration - ER05 9677 689U S

This is a post-only message. Please do not respond.

Denise P has requested that you receive this restoration information for Track & Confirm as listed below.

Current Track & Confirm e-mail information provided by the U.S. Postal Service.

Label Number: ER05 9677 689U S

Service Type: Express Mail - Post Office to Addressee

Shipment Activity	Location	Date & Time
Delivered	ALEXANDRIA VA 22313	01/05/07 9:33am
Arrival at Unit	DULLES VA 20102	01/05/07 7:43am
Enroute	NEW YORK NY 10199	01/04/07 5:38pm
Acceptance	NEW YORK NY 10199	01/04/07 1:37pm

USPS has not verified the validity of any email addresses submitted via its online Track & Confirm tool.

For more information, or if you have additional questions on Track & Confirm services and features, please visit the Frequently Asked Questions (FAQs) section of our Track & Confirm site at http://www.usps.com/shipping/trackandconfirmfaqs.htm

UNITED STATES PATENT AND TRADEMARK OFFICE

Commissioner for Patents
United States Patent and Trademark Office
P.O. Box 1450
Alexandria, VA 22313-1450
www.uspto.gov

ABELMAN, FRAYNE & SCHWAB
666 Third Ave., 10th Floor
New York NY 10017-5621

COPY MAILED

MAR 1 2 2007

OFFICE OF PETITIONS

In re Application of	:	
JARALLA	:	
Application No. 10/533,490	:	DECISION DISMISSING
Filed: April 28, 2005	:	PETITION UNDER 37 CFR 1.10(c)
Attorney Docket No. 206,973	:	

This is a decision on the petition filed January 16, 2007, which is properly treated as a petition under 37 CFR 1.10(c) requesting that the submission of the issue fee payment for the above-identified application be considered as filed on January 3, 2007, which is the "date-in" or other official USPS notation on the Express Mail Mailing Label, instead of the currently accorded filing date of January 4, 2007.

The petition is **DISMISSED**.

Any request for reconsideration of this decision should be filed within **TWO MONTHS** of the date of this decision in order to be considered timely (see 37 CFR 1.181(f)). No extensions of time pursuant to the provisions of 37 CFR 1.136 are permitted. If reconsideration is not requested within the time period specified above, this submission of the issue fee payment for the application will be referred to Office of Publications with the presently accorded filing date of January 4, 2007.

37 CFR 1.10(c) sets forth procedures for filing a petition to the Director for a filing date as of the date of deposit with the USPS, where there is a discrepancy between the filing date initially accorded by the Office and the "date in" entered by the USPS or other official USPS notation.

To be grantable, a petition must:

(1) be filed promptly after the person becomes aware that the Office has accorded, or will accord, a filing date other than the USPS deposit date;

(2) include a showing that the number of the "Express Mail" mailing label was placed on each piece of correspondence prior to the original mailing; and

(3) include a true copy of the "Express Mail" mailing label showing the "date in" or other official notation by the USPS.

This petition lacks item (3) above.

Petitioner requests the filing date of January 3, 2007 on the basis that there is a discrepancy between the filing date the USPTO has currently accorded this application and the "date-in" or other official USPS notation on the "Express Mail" mailing label. The Remarks of the petition state, "[a]ttached is a true copy of the "Express Mailing Label" for this submission showing the "date-in" entry of January 3, 2007 in round stamp made by an employee of the U.S. Postal Service." Unfortunately, the copy of round stamp on the Express Mail mailing label supplied to the Office is illegible, and no date can be discerned.

Moreover even if the submission was granted a filing date of January 3, 2007, the above-identified application is abandoned. The application became abandoned for failure s to timely pay the issue and publication fees on or before January 2, 2007, as required by the Notice of Allowance and Fee(s) Due, mailed October 2, 2006, which set a statutory period for reply of three (3) months. Accordingly, the application became abandoned on January 3, 2007.

Further correspondence with respect to this matter should be addressed as follows:

By Mail: Mail Stop PETITION
Commissioner for Patents
P. O. Box 1450
Alexandria, VA 22313-1450

By facsimile: (571) 273-8300
Attn: Office of Petitions

By hand: U. S. Patent and Trademark Office
Customer Service Window, Mail Stop Petitions
Randolph Building
401 Dulany Street
Alexandria, VA 22314

Telephone inquiries concerning this matter may be directed to Denise Pothier at (571) 272-4787.

Frances Hicks
Lead Paralegal
Office of Petitions

UNITED STATES PATENT AND TRADEMARK OFFICE

Commissioner for Patents
United States Patent and Trademark Office
P.O. Box 1450
Alexandria, VA 22313-1450
www.uspto.gov

ABELMAN, FRAYNE & SCHWAB
666 Third Ave.
New York NY 10017-5621

COPY MAILED
DEC 0 7 2007
OFFICE OF PETITIONS

In re Application of	:	
JARALLA	:	
Application No. 10/533,490	:	ON PETITION
Filed: April 28, 2005	:	FOR HIGHER LEVEL REVIEW
Attorney Docket No. 206,973	:	

This is a decision on a renewed petition or a request for reconsideration at a higher level filed July 10, 2007, which is treated as a petition under 37 CFR 1.10(c) requesting that the submission of the formal corrected drawings for the above-identified application be considered as filed on January 3, 2007, instead of the currently accorded submission date of January 4, 2007.

The petition is **DISMISSED as moot.**

Petitioner alleges that the issue fee, the publication fee, and drawings were deposited with the United States Postal Service on January 3, 2007 using Express Mail Service. As stated in the previous decision of June 7, 2007, petitioner has provided sufficient evidence that the issue and publication fees were timely submitted on January 3, 2007 because the Express Mail label number was placed on the fee transmittal sheet or a paper that constitutes a correspondence. Additionally, the decision noted that the January 3, 2007 submission of the issue and publication fees is timely in view of an official correspondence from the Under Secretary of Commerce for Intellectual Property and Director of the United States Patent and Trademark Office, entitled, "Closing of the United States Patent and Trademark Office on Tuesday, January 2, 2007. This correspondence explains that the Office was not open on January 2, 2007, and as such, "[a]ny action or fee due on Tuesday, January 2, 2007, will be considered as timely for purposes of, e.g., 35 U.S.C. §§ 119, 120, 133, and 151, if the action is taken, or the fee is paid, on the next succeeding business day on which the USPTO was open, that is, Wednesday, January 3, 2007."

The timely filing of the issue and publication fees has not been disputed in petitioner's renewed petition of July 10, 2007. On reconsideration and relying on a postcard receipt, petitioner has argued that the corrected drawings were also submitted on January 3, 2007.

It has recently come to the Office's attention that a Notice Regarding Drawings (Notice) and a Notice of Draftsperson's Drawing Review were apparently mailed to applicant on December 18,

2006.[1] The Notice set a non-extendable two-month period for response and, thus, extended the period for responding to the corrected drawing requirement until February 18, 2007. In light of this Notice, the formal drawing submission received by the Office on January 4, 2007 is considered timely regardless of whether the formal drawings are accorded a January 3, 2007 or January 4, 2007 submission date.

Based on the above, the Notice of Abandonment of June 20, 2007 was mailed in error and is, hereby, vacated. The Office regrets any inconvenience.

Please note that Office records reflect the Notice of Abandonment mailed June 20, 2007 was returned to the Office as undeliverable. This Notice was mailed to: Abelman Frayne & Schwab, 666 Third Ave., 10th Floor, New York, NY 10017-5621. This address matches the last Change of Address received on January 4, 2007. Slightly inconsistent with the Change of Address submitted on January 4, 2007, the petition filed July 10, 2007 includes a letterhead with an address of: Abelman Frayne & Schwab, 666 Third Avenue, New York, NY 10017-5621. Petitioner should review the record and provide the Office with a viable correspondence address. See MPEP 601.03, 711.03(c) and 2501.

Telephone inquiries concerning this matter may be directed to Denise Pothier at (571) 272-4787.

The application will be forwarded to the Office of Publication for further processing.

Charles Pearson
Director
Office of Petitions

enc: Notice Regarding Drawings mailed December 18, 2006
Notice of Draftsperson's Drawings Review referring to drawings filed on 4/28/05 (PTO-948)

cc: ABELMAN, FRAYNE & SCHWAB
666 Third Ave., 10th Floor
New York NY 10017-5621

[1] These Notices appear to have been sent to an incorrect address: Abelman Frayne & Schwab, 150 East 42nd Street, New York, NY 10017-5612. The applicant notified the Office of a change of address on October 16, 2006 to: Abelman Frayne & Schwab, 666 Third Avenue, 10th Floor, New York, NY 10017-5621.

UNITED STATES PATENT AND TRADEMARK OFFICE

UNDER SECRETARY OF COMMERCE FOR INTELLECTUAL PROPERTY AND
DIRECTOR OF THE UNITED STATES PATENT AND TRADEMARK OFFICE

APPLICATION NUMBER	FILING/RECEIPT DATE	FIRST NAMES APPLICANT	ATTORNEY DOCKET NUMBER
10/533,490	11/30/2005	ABDULGHANI JARALLA	266,973

Examiner
ROGERS, DAVID A

Art Unit: 2856

Paper Number

ABELMAN FRAYNE & SCHWAB
150 EAST 42ND STREET
NEW YORK, NY 10017-5612

Date Mailed:12/18/2006

Notice Regarding Drawings

Corrected drawings for the above-identified application, received in the USPTO on 04/28/2005 are still not acceptable for the reason(s) identified below. Applicant is given one opportunity to correct the informalities within a two-month time period from the mailing date of this Notice. **THIS TIME PERIOD IS NOT EXTENDABLE UNDER EITHER 37 CFR 1.136(a) OR 1.136(b). Failure to take corrective action within the set period will result in abandonment of the application.**

Clifton B. Randolph
Office of Patent Publication,
Publishing Division
703-305-0333 ext-128

Form PTO-948 (Rev. 06/03)
Application No. 10/533490

U.S. DEPARTMENT OF COMMERCE
U.S. Patent and Trademark Office

NOTICE OF DRAFTSPERSON'S PATENT DRAWING REVIEW

The drawing(s) filed (insert date) 4/28/05 are:

A. ___ approved by the Draftsperson under 37 CFR 1.84 or 1.152.

B. ✓ objected to by the Draftsperson under 37 CFR 1.84 or 1.152 for the reasons indicated below. Corrected drawings are required.

1. DRAWINGS. 37 CFR 1.84(a): Acceptable categories of drawings: Black ink or Color (3 sets required).

___ Color drawings are not acceptable until petition is granted. Fig(s)___

___ Pencil and non black ink not permitted. Fig(s)___

2. PHOTOGRAPHS. 37 CFR 1.84(b)

___ One (1) full-tone set is required. Fig(s)___

___ Photographs may not be mounted. 37 CFR 1.84(e)

___ Photographs must meet paper size requirements of 37 CFR 1.84(f). Fig(s)___

___ Poor quality (half-tone). Fig(s)___

3. TYPE OF PAPER. 37 CFR 1.84(e)

___ Paper not flexible, strong, white, and durable. Fig(s)___

___ Erasures, alterations, overwritings, interlineations, folds, copy machine marks not accepted. Fig(s)___

4. SIZE OF PAPER. 37 CFR 1.84(f): Acceptable sizes:
21.0 cm by 29.7 cm (DIN size A4) or
21.6 cm by 27.9 cm (8 1/2x 11 inches)

___ All drawing sheets not the same size. Sheet(s)___

___ Drawings sheets not an acceptable size. Fig(s)___

5. MARGINS. 37 CFR 1.84(g): Acceptable margins:
Top 2.5 cm Left 2.5 cm Right 1.5 cm Bottom 1.0 cm

___ Margins not acceptable. Fig(s)___

___ Top (T) ___ Left (L)

___ Right (R) ___ Bottom (B)

6. VIEWS. 37 CFR 1.84(h)

REMINDER: Specification may require revision to correspond to drawing changes, e.g., if Fig. 1 is changed to Fig. 1A, Fig 1B and Fig. 1C, etc., the specification, at the Brief Description of the Drawings, must likewise be changed.

___ Views not labeled separately or properly. Fig(s)___

7. SECTIONAL VIEWS. 37 CFR 1.84(h)(3)

___ Sectional designation should be noted with Arabic or Roman numbers. Fig(s)___

8. ARRANGEMENT OF VIEWS. 37 CFR 1.84(i)

___ Words do not appear on a horizontal, left-to-right fashion when page is either upright or turned so that the top becomes the right side, except for graphs. Fig(s)___

9. SCALE. 37 CFR 1.84(k)

___ Scale not large enough to show mechanism without crowding when drawing is reduced in size to two-thirds in reproduction. Fig(s)___

10. CHARACTER OF LINES, NUMBERS, & LETTERS. 37 CFR 1.84(l)

✓ Lines, numbers & letters not uniformly thick and well defined, clean, durable, and black (poor line quality). Fig(s) 1-4

11. SHADING. 37 CFR 1.84(m)

___ Solid black areas pale. Fig(s)___

___ Solid black shading not permitted. Fig(s)___

12. NUMBERS, LETTERS, & REFERENCE CHARACTERS. 37 CFR 1.84(p)

✓ Numbers and reference characters not plain and legible. Fig(s) 1-4

✓ Figure legends are poor. Fig(s) 1-4

___ Numbers and reference characters not oriented in the same direction as the view. 37 CFR 1.84(p)(1) Fig(s)___

___ English alphabet not used. 37 CFR 1.84(p)(2) Fig(s)___

___ Numbers, letters and reference characters must be at least 32 cm (1/8 inch) in height. 37 CFR 1.84(p)(3). Fig(s)___

13. LEAD LINES. 37 CFR 1.84(q)

___ Lead lines missing. Fig(s)___

14. NUMBERING OF SHEETS OF DRAWINGS. 37 CFR 1.84(t)

___ Sheets not numbered consecutively, and in Arabic numbers beginning with number 1. Sheet(s)___

15. NUMBERING OF VIEWS. 37 CFR 1.84(u)

___ Views not numbered consecutively, and in Arabic numerals, beginning with number 1. Fig(s)___

16. DESIGN DRAWINGS. 37 CFR 1.152

___ Surface shading shown not appropriate. Fig(s)___

___ Solid black surface shading is not permitted except when used to represent the color black as well as color contrast. Fig(s)___

COMMENTS:

Reviewer CBR

Date 12/18/06

If you have questions, call (703) 305-8404.

Attachment to Paper No. ___

UNITED STATES PATENT AND TRADEMARK OFFICE

Commissioner for Patents
United States Patent and Trademark Office
P.O. Box 1450
Alexandria, VA 22313-1450
www.uspto.gov

Paper No.

ABELMAN, FRAYNE & SCHWAB
666 Third Ave., 10th Floor
New York NY 10017-5621

COPY MAILED

SEP 30 2008

OFFICE OF PETITIONS

In re Patent No. 7,320,245	:	DECISION ON REQUEST
Jaralla et al.	:	FOR RECONSIDERATION
Issue Date: January 22, 2008	:	and
Application No. 10/533,490	:	NOTICE OF INTENT TO ISSUE
Filed: November 30, 2005	:	CERTIFICATE OF CORRECTION
Atty Docket No. 206,973	:	

This is a decision on the "APPLICATION FOR PATENT TERM ADJUSTMENT" filed January 14, 2008. Patentees request that the determination of patent term adjustment under 35 U.S.C. 154(b) be corrected to two hundred sixty-two (262) days.

The request for reconsideration of patent term adjustment is **DISMISSED**.

Patentee is given two (2) months from the mail date of this decision to respond. Extensions of time under § 1.136(a) are not permitted.

However, for the reasons stated herein, the patent term adjustment indicated in the patent is to be corrected by issuance of a certificate of correction showing a revised Patent Term Adjustment of **one hundred forty-four (144)** days.

On January 22, 2008, the application matured into U.S. Patent No. 7,320,245, with a revised patent term adjustment of 145 days. Prior to issuance, on January 14, 2008, patentees timely filed the instant request for reconsideration of patent term adjustment. Patentee states that the correct patent term adjustment is 262 days. Patentee requests the correction on the basis that the Office failed to issue a patent within "four months after the date on which the issue fee was paid under 35 U.S.C. 151 and all outstanding requirements were satisfied."

Patentee states that the issue fee was paid and all outstanding requirements were satisfied on January 3, 2007. Patentee further states that as the issue date for the patent shown on the Issue Notification is January 22, 2008, the period of delay exceeding the 4-month time limit for patent issuance is 262 days.

Patentee is correct that a period of adjustment was due for Office delay in issuing the patent. In fact, at issuance of the patent, a period of adjustment of 265 days was entered for the Office taking in excess of four months to issue the patent after payment of the issue fee and satisfaction of all outstanding requirements. However, patentee does not recognize that this period of adjustment was properly reduced for applicant delay. Specifically, 37 CFR 1.704(c)(10) provides that:

> Submission of an amendment under § 1.312 or other paper after a notice of allowance has been given or mailed, in which case the period of adjustment set forth in § 1.703 shall be reduced by the lesser of:
>
> (i) The number of days, if any, beginning on the date the amendment under § 1.312 or other paper was filed and ending on the mailing date of the Office action or notice in response to the amendment under § 1.312 or such other paper; or
>
> (ii) Four months; and

In this instance, drawings were filed on January 3, 2007, after the mailing of the notice of allowance on October 2, 2006. This constituted a failure to engage for which a period of reduction of 120 days was properly entered.

However, correction of the patent term adjustment is required as the period of adjustment for Office delay was 264 days, not 265 days. The issue fee was paid and all outstanding requirements were satisfied as of January 3, 2007. Pursuant to 37 CFR 1.703(a)(6), the period of adjustment is 264 days (not 265 days), counting the number of days in the period beginning on the day after the date that is four months after the date the issue fee was paid and all outstanding requirements were satisfied, May 4, 2007, and ending on the date a patent was issued, January 22, 2008.

In view thereof, it is concluded that the revised patent term adjustment indicated in the patent should be one hundred forty-four (144) days (264 - 120).

The Office acknowledges submission of $200.00 fee set forth in 37 CFR 1.18(e). No additional fees are required.

The application is being forwarded to the Certificates of Correction Branch for issuance of a certificate of correction in order to rectify this error. The Office will issue a certificate of correction indicating that the term of the above-identified patent is extended or adjusted by one hundred forty-four **(144)** days.

Telephone inquiries specific to this matter should be directed to the undersigned at (571) 272-3219.

Nancy Johnson
Senior Petitions Attorney
Office of Petitions

Enclosure: Copy of DRAFT Certificate of Correction

UNITED STATES PATENT AND TRADEMARK OFFICE

CERTIFICATE OF CORRECTION

PATENT : 7,320,245 B2

DATED : **January 22, 2008** **DRAFT**

INVENTOR(S) : Jaralla et al.

It is certified that error appears in the above-identified patent and that said Letters Patent is hereby corrected as shown below:

On the cover page,

[*] Notice: Subject to any disclaimer, the term of this patent is extended or adjusted under 35 USC 154(b) by 145 days

Delete the phrase "by 145 days" and insert – by 144 days--

UNITED STATES PATENT AND TRADEMARK OFFICE

UNITED STATES DEPARTMENT OF COMMERCE
United States Patent and Trademark Office
Address: COMMISSIONER FOR PATENTS
P.O. Box 1450
Alexandria, Virginia 22313-1450
www.uspto.gov

HARNESS, DICKEY, & PIERCE, P.L.C
7700 Bonhomme, Suite 400
ST. LOUIS, MO 63105

Mail Date: 04/21/2010

Applicant	: Xiaowei Liu	: DECISION ON REQUEST FOR
Patent Number	: 7583754	: RECALCULATION of PATENT
Issue Date	: 09/01/2009	: TERM ADJUSTMENT IN VIEW
Appliction No	: 10/533,494	: OF WYETH AND NOTICE OF INTENT TO
Filed	: 05/10/2006	: ISSUE CERTIFICATE OF CORRECTION
		:

The Request for Recalculation is **GRANTED** to the extent indicated.

The patent term adjustment has been determined to be **784** days. The USPTO will *sua sponte* issue a certificate of correction reflecting the amount of PTA days determined by the recalculation.

Prior to the issuance of the certificate of correction, the USPTO will afford patentee an opportunity to be heard and request reconsideration. Accordingly, patentee has **one month or thirty (30) days**, whichever is longer, to file a request for reconsideration of this patent term adjustment calculation. See 35 U.S.C. 154(b)(3)(B)(ii) and 37 CFR 1.322(a)(4). No extensions of time will be granted under 37 CFR 1.136.

Patentee should use document code PET.OP if electronically filing a request for reconsideration of this patent term adjustment calculation. The patentee must also include the information required by 37 CFR 1.705(b)(2) and the fee required by 37 CFR 1.18(e). If patentee does not file a timely request for reconsideration of this patent term adjustment calculation including the information required by 37 CFR 1.705(b)(2) and the fee required by 37 CFR 1.18(e), the USPTO will issue a certificate of correction reflecting the PTA determination noted above.

Patentee should be aware that in order to preserve the right to review in the United States District Court for the District of Columbia of the USPTO patent term adjustment determination, patentee must ensure that he or she also take the steps required under 35 U.S.C. 154(b)(4)(A) in a timely manner. Nothing in the request for recalculation should be construed as providing an alternative time frame for commencing a civil action under 35 U.S.C. 154(b)(4)(A).

Any questions concerning this decision should be directed to the Office of Patent Legal Administration at 571-272-7702.

#6

UNITED STATES PATENT and TRADEMARK OFFICE

COMMISSIONER FOR PATENTS
UNITED STATES PATENT AND TRADEMARK OFFICE
P.O BOX 1450
ALEXANDRIA, VA 22313-1450
www.uspto.gov

01 FEB 2006

GLAXOSMITHKLINE
Corporate Intellectual Property- UW2220
P.O. Box 1539
King of Prussia, PA 19406-0939

In re Application of	:	
AXTEN et al	:	DECISION ON
Application No.: 10/533,501	:	
PCT No.: PCT/US2003/035206	:	
Int. Filing Date: 04 November 2003	:	PETITION UNDER
Priority Date: 05 November 2002	:	
Attorney Docket No.: P51380	:	
For: ANTIBACTERIAL AGENTS	:	37 CFR 1.181

This decision is in response to applicants' "executed declaration" filed on 02 May 2005 with the correct name of the fourth inventor as Mark Andrew SEEFELD. This is being treated as a petition under 37 CFR 1.181.

BACKGROUND

On 04 November 2003, applicants filed international application No. PCT/US03/35206, which claims a priority date of 05 November 2002.

On 02 May 2005, applicant filed in the United States Patent and Trademark Office (PTO) a Transmittal Letter (Form PTO-1390) accompanied by, *inter alia*, the basic national fee, and an executed declaration.

In the declaration section pertaining to the fourth named inventor, the name Mark Andrew SEEFELD appears; this name did not appeared in the international application which is Mark Antony SEEFELD.

DISCUSSION

It is unclear from the submission whether the corrected name is due to a name change or a typographical error since applicant has provided no explanation. Therefore, the declaration of the inventors is not acceptable at this time, in that the name of the named inventor, Mark Andrew SEEFELD, does not correspond to that set forth in the international application, Mark Antony SEEFELD.

MPEP § 605.04(c) requires in instances where an inventor has changed his or her name after the application has been filed to submit a petition under 37 CFR 1.182. The petition must include (1) the appropriate petition fee and (2) an affidavit signed with both names setting forth the procedure whereby the change of name was effected, or a certified copy of the court order.

Applicant must provide items (1) and (2) for consideration. Alternatively, applicants may provide a showing that the name change was effected in accordance with PCT Rule 92Bis prior to the filing of the present national stage application.

Also, in the case where there is no change name of the individual but an incorrect name was given, a petition under **37 CFR 1.182** should be filed requesting correction of applicant's name

If, however, the name change is due to a typographical error then applicant needs to state and explain it by filing a petition under 37 CFR 1.181. If filed under 37 CFR 1.181 the reconsideration request should include a cover letter entitled "Renewed Petition under 37 CFR 1.181."

For the reasons above, the application may not enter into national stage processing at this time.

CONCLUSION

The petition under 37 CFR 1.181 is **DISMISSED**, without prejudice.

A proper response to the Notice must be filed within TWO (2) MONTHS from the mail date of this decision. Extensions of time are available under 37 CFR 1.136(a). Failure to timely file the proper response will result in ABANDONMENT.

Any further correspondence with respect to this matter should be addressed to the Mail Stop PCT, Commissioner for Patents, Office of PCT Legal Administration, P.O. Box 1450, Alexandria, Virginia 22313-1450, with the contents of the letter marked to the attention of the Office of PCT Legal Administration.

Rafael Bacares
PCT Legal Examiner
PCT Legal Office
Telephone: (571) 272-3276
Facsimile: (571) 272-0459

17 APR 2006

UNITED STATES PATENT and TRADEMARK OFFICE

COMMISSIONER FOR PATENTS
UNITED STATES PATENT AND TRADEMARK OFFICE
P.O BOX 1450
ALEXANDRIA, VA 22313-1450
www.uspto.gov

GLAXOSMITHKLINE
Corporate Intellectual Property- UW2220
P.O. Box 1539
King of Prussia, PA 19406-0939

In re Application of	:	
AXTEN et al	:	DECISION ON
Application No.: 10/533,501	:	
PCT No.: PCT/US2003/035206	:	
Int. Filing Date: 04 November 2003	:	PETITION UNDER
Priority Date: 05 November 2002	:	
Attorney Docket No.: P51380	:	
For: ANTIBACTERIAL AGENTS	:	37 CFR 1.182

This is in response to applicants' submission "Petition to Commissioner Under 37 C.F.R. 1.182" filed on 22 February 2006. This submission states that the correct applicant's name is Mark Andrew SEEFELD not Mark Anthony SEEFELD for the fourth joint inventor. The petition fee of $130.00 has been charged petitioner's Deposit Account No.: 19-2570 as stipulated on the petition.

BACKGROUND

In a 01 February 2006 decision from this Office, the decision indicated that the application could not enter into national stage at that time since it was unclear if the current name was a result of a to a name change or typographical error.

On 23 February 2006, applicant filed a petition under 37 CFR 1.182 indicating that the correct name is "Mark Andrew SEEFELD" and not as listed "Mark Anthony SEEFELD."

DISCUSSION

The correct name of the fourth inventor is "Mark Andrew SEEFELD" as indicated in the declaration submitted. The affidavit provided states that his correct name is Mark Andrew SEEFELD and this will be reflected in the U.S. national stage processing.

DECISION

For the reasons above, the petition under 37 CFR 1.182 is **GRANTED.** The application will be granted a 35 U.S.C. 371 (c)(1), (c)(2) and (c)(4) date of ~~29 December 2005.~~ 02 May 2005. RB

Nonetheless, the application does not meet the requirements under 35 U.S.C. 371 for entry into the national stage in the US. Applicant is required to provide an oath or declaration in compliance with 37 CFR 1.497(a)-(b) within TWO (2) MONTHS from the mail date of this Decision. Failure to respond will result in the abandonment of the application Extensions of time under 37 CFR 1.136(a) are available.

Any further correspondence with respect to this matter should be addressed to the Mail Stop PCT, Commissioner for Patents, Office of PCT Legal Administration, P.O. Box 1450, Alexandria, Virginia 22313-1450, with the contents of the letter marked to the attention of the Office of PCT Legal Administration.

Rafael Bacares
PCT Legal Examiner
PCT Legal Office
Telephone: (571) 272-3276
Facsimile: (571) 273-3276

17 APR 2006

UNITED STATES PATENT and TRADEMARK OFFICE

COMMISSIONER FOR PATENTS
UNITED STATES PATENT AND TRADEMARK OFFICE
P.O BOX 1450
ALEXANDRIA, VA 22313-1450
www.uspto.gov

2006 APR 21 A 11: 32

GLAXOSMITHKLINE
Corporate Intellectual Property- UW2220
P.O. Box 1539
King of Prussia, PA 19406-0939

In re Application of	:	
AXTEN et al	:	DECISION ON
Application No.: 10/533,501	:	
PCT No.: PCT/US2003/035206	:	
Int. Filing Date: 04 November 2003	:	PETITION UNDER
Priority Date: 05 November 2002	:	
Attorney Docket No.: P51380	:	
For: ANTIBACTERIAL AGENTS	:	37 CFR 1.182

This is in response to applicants' submission "Petition to Commissioner Under 37 C.F.R. 1.182" filed on 22 February 2006. This submission states that the correct applicant's name is Mark Andrew SEEFELD not Mark Anthony SEEFELD for the fourth joint inventor. The petition fee of $130.00 has been charged petitioner's Deposit Account No.: 19-2570 as stipulated on the petition.

BACKGROUND

In a 01 February 2006 decision from this Office, the decision indicated that the application could not enter into national stage at that time since it was unclear if the current name was a result of a to a name change or typographical error.

On 23 February 2006, applicant filed a petition under 37 CFR 1.182 indicating that the correct name is "Mark Andrew SEEFELD" and not as listed "Mark Anthony SEEFELD."

DISCUSSION

The correct name of the fourth inventor is "Mark Andrew SEEFELD" as indicated in the declaration submitted. The affidavit provided states that his correct name is Mark Andrew SEEFELD and this will be reflected in the U.S. national stage processing.

DECISION

For the reasons above, the petition under 37 CFR 1.182 is **GRANTED.** The application will be granted a 35 U.S.C. 371 (c)(1), (c)(2) and (c)(4) date of **29 December 2005.**

Nonetheless, the application does not meet the requirements under 35 U.S.C. 371 for entry into the national stage in the US. Applicant is required to provide an oath or declaration in compliance with 37 CFR 1.497(a)-(b) within TWO (2) MONTHS from the mail date of this Decision. Failure to respond will result in the abandonment of the application Extensions of time under 37 CFR 1.136(a) are available.

Any further correspondence with respect to this matter should be addressed to the Mail Stop PCT, Commissioner for Patents, Office of PCT Legal Administration, P.O. Box 1450, Alexandria, Virginia 22313-1450, with the contents of the letter marked to the attention of the Office of PCT Legal Administration.

Rafael Bacares
PCT Legal Examiner
PCT Legal Office
Telephone: (571) 272-3276
Facsimile: (571) 273-3276

UNITED STATES PATENT AND TRADEMARK OFFICE

Commissioner for Patents
United States Patent and Trademark Office
P.O. Box 1450
Alexandria, VA 22313-1450
www.uspto.gov

12/8/09

Patent No. :7618959
Ser. No. :10/533501
Inventor(s) :Axten et al.
Issued :11/17/09
Title :ANTIBACTERIAL AGENTS
Docket No. :

Re: Request for Certificate of Correction

Consideration has been given your request for the issuance of a certificate of correction for the above-identified patent under the provisions of Rule(s) 1.322 and/or 1.323.

Assignees' names and addresses (assignment data) printed in a patent, are based *solely* on information supplied in the appropriate space for identifying the assignment data, i.e., item 3 of the Issue Fee Transmittal Form PTOL-85B. Granting of a request under 37 CFR 3.81(b) is required to correct applicant's error providing ***incorrect or erroneous*** assignment data, *before* issuance of a Certificate of Correction, under 37 CFR 1.323 *(see Manual of Patent Examining Procedures (M.P.E.P) Chp.1400, sect. 1481).* This procedure is required *at any time after the issue fee is paid*, including after issuance of the patent.

In view of the foregoing, your request, in this mater, is hereby denied.

A request to correct the Assignee under 37 CFR 3.81(b) should include:

A. **the processing fee set forth in 37 CFR 1.117(h) (currently $130);**
B. a statement that the failure to include the correct assignee name on the PTOL-85B was inadvertent; and
C. a copy of the Notice of Recordation of Assignment Document, reflecting the reel and frame number where the assignment(s) is recorded and/or reflecting proof of *the date* the assignment was submitted for recordation.

In the Request, Applicant(s) may request that the file be forwarded to Certificates of Correction Branch, for issuance of a Certificate of Correction, if the Request is granted.

Any request under 37 CFR 3.81(b) should be directed to the following address or facsimile number:

By mail: Mail Stop PETITIONS
Commissioner for Patents
Post Office Box 1450
Alexandria, VA 22313-1450

By hand: Customer Service Window
Mail Stop Petitions
Randolph Building
401 Dulany Street
Alexandria, VA 22314

By fax: (703) 872-9306
ATTN: Office of Petitions

If a fee (currently $100) was previously submitted for consideration of a Request for Certificate of Correction, under CFR 1.323, to correct assignment data, , no additional fee is required.

A certificate of correction will be issued to correct the remaining errors noted in your request.

Henry Randall
Decisions & Certificates
of Correction Branch
(703) 756-1571

REID S. WILLIS
P.O. BOX 1539 UW 2220
KING OF PRUSSIA 19406-0939

HR

UNITED STATES PATENT AND TRADEMARK OFFICE

Commissioner for Patents
United States Patent and Trademark Office
P.O. Box 1450
Alexandria, VA 22313-1450
www.uspto.gov

MAILED

MAY 1 2 2010

OFFICE OF PETITIONS

GlaxoSmithKline
GLOBAL PATENTS -US, UW2220
P. O. BOX 1539
KING OF PRUSSIA PA 19406-0939

In re Patent No. 7,618,959	:	
Issue Date: November 17, 2009	:	
Application No. 10/533,501	:	DECISION ON PETITION
Filed: May 2, 2005	:	
Attorney Docket No. P51380	:	

This is a decision on the Request For Certificate Of Correction For Applicant's Mistake Under 37 CFR 1.323, filed December 14, 2009, to correct assignee's name on PTOL-85B. The Request is being treated as a Petition. A completed Certificate of Correction Form (PTO/SB/44) was submitted with the petition.

The petition for a waiver of 37 CFR 3.81 is **GRANTED**.

Petitioner requests, in effect, that the Title Page of the above-identified patent be corrected, via issuance of a Certificate of Correction, to correct the name of the assignee submitted on the PTOL-85B identified thereon from:

"Smithkline Beecham Corporation"

to:

-- Glaxo Group Limited, Brentford, Middlesex, United Kingdom--

37 CFR 3.81(b), effective June 25, 2004, reads:

> *After payment of the issue fee:* Any request for issuance of an application in the name of the assignee submitted after the date of payment of the issue fee, and any request for a patent to be corrected to state the name of the assignee, must state that the assignment was submitted for recordation as set forth in § 3.11 before issuance of the patent, and must include a request for a certificate of correction under § 1.323 of this chapter (accompanied by the fee set forth in § 1.20(a) and the processing fee set forth in § 1.17(i) of this chapter.

The requisite $100.00 fee (Fee Code 1811) as set forth under 37 CFR 1.20(a) was submitted with the Petition. However, the requisite $130.00 processing fee (Fee Code 1464), as set forth under 37 CFR 1.17(i), was accompanied deposit account authorization to charge any required fees. As such, the fee has been charged as authorized. Further, Office assignment records are consistent with the requested correction. Accordingly, since the Petition complies with the provisions of 37 CFR 3.81(b), it is appropriate for the Office to issue a Certificate of Correction in accordance with the content of the Form PTO/SB/44 that accompanied the present Petition.

Inquiries related this communication should be directed to Cheryl Gibson-Baylor at (571)272-3213.

Any questions concerning the issuance of a Certificate of Correction should be directed to the Certificates of Correction Branch at (571) 272-4200.

This matter is being referred to the Certificates of Correction Branch for processing of a Certificate of Correction in U.S. Patent No. 7,618,959.

Brian W. Brown
Petitions Examiner
Office of Petitions

UNITED STATES PATENT AND TRADEMARK OFFICE

COMMISSIONER FOR PATENTS
UNITED STATES PATENT AND TRADEMARK OFFICE
P.O. BOX 1450
ALEXANDRIA, VA 22313-1450
www.uspto.gov

Paper No.

GlaxoSmithKline
GLOBAL PATENTS -US, UW2220
P. O. BOX 1539
KING OF PRUSSIA PA 19406-0939

MAILED
JUL 09 2010
OFFICE OF PETITIONS

In re Patent No. 7,618,959	:	DECISION ON REQUEST
Axten et al.	:	FOR
Issue Date: November 17, 2009	:	RECONSIDERATION OF
Application No. 10/533,501	:	PATENT TERM ADJUSTMENT
Filed: May 02, 2005	:	and
Atty Docket No. P51380	:	NOTICE OF INTENT TO ISSUE
	:	CERTIFICATE OF CORRECTION

This is a decision on the petition filed on January 14, 2010, which is being treated as a petition under 37 CFR 1.705(d) requesting that the patent term adjustment indicated on the above-identified patent be corrected to indicate that the term of the above-identified patent is extended or adjusted by nine hundred seventy (970) days.

The petition to correct the patent term adjustment indicated on the above-identified patent is **GRANTED to the extent indicated herein**. The patent term adjustment is corrected to indicate that the term of the above-identified patent is extended or adjusted by **nine hundred sixty-nine (969)** days.

As the period from the filing date of the request for continued examination (RCE) to the issue date of the patent is not included in the "B" delay period, the over three year period begins on May 3, 2008 and ends on June 10, 2009, the day before the RCE was filed. See 35 U.S.C. 154(b)(1)(B)(i). Thus, the over 3 year period is 404 not 405 days. Accordingly, the patent term adjustment is now increased to 969 days.

The Office will *sua sponte* issue a certificate of correction. Pursuant to 37 CFR 1.322, the Office will not issue a certificate of correction without first providing assignee or patentee an opportunity to be heard. Accordingly, patentees are given **one (1) month or thirty (30) days**, whichever is longer, from the mail date of this decision to respond. No extensions of time will be granted under § 1.136.

The Office acknowledges submission of the $200.00 fee set forth in 37 CFR 1.18(e). No additional fees are required.

The application is being forwarded to the Certificates of Branch for issuance of a certificate of correction. The Office will issue a certificate of correction indicating that the term of the above-identified patent is extended or adjusted by **nine hundred sixty-nine (969)** days.

Telephone inquiries specific to this matter should be directed to the undersigned at (571) 272-3219.

Nancy Johnson
Senior Petitions Attorney
Office of Petitions

Enclosure: Copy of DRAFT Certificate of Correction

UNITED STATES PATENT AND TRADEMARK OFFICE

CERTIFICATE OF CORRECTION

PATENT : 7,618,959 B2

DATED : **November 17, 2009** **DRAFT**

INVENTOR(S) : Axten et al.

It is certified that error appears in the above-identified patent and that said Letters Patent is hereby corrected as shown below:

On the cover page,

[*] Notice: Subject to any disclaimer, the term of this patent is extended or adjusted under 35 USC 154(b) by 565 days

Delete the phrase "by 565 days" and insert – by 969 days--

24 MAR 2006

#7

UNITED STATES PATENT AND TRADEMARK OFFICE

Commissioner for Patents
United States Patent and Trademark Office
P.O. Box 1450
Alexandria, VA 22313-1450
www.uspto.gov

Glaxosmithkline
Corporate Intellectual Property -UW2220
P.O. Box 1539
King of Prussia, New Jersey 19406-0939

In re Application of	:	
AXTEN et al.	:	
Application No.: 10/533,502	:	DECISION ON REQUEST
PCT No.: PCT/US03/35201	:	
Int. Filing Date: 04 November 2003	:	
Priority Date: 05 November 2002	:	
Attorney Docket No.: P51381	:	
For: ANTIBACTERIAL AGENTS		

This decision is in response to applicants' "Response to Notification of Missing Requirements - Petition to the Commissioner under 37 CFR 1.182" filed 23 February 2006. Applicants are notifying the Office that the name of the third inventor is Mark Andrew Seefeld as indicated on the declaration rather than Mark Antony Seefeld as indicated on the published international application. Applicants are advised that pursuant to 37 CFR 1.17(f) the petition fee is $400.00. As authorized, the additional $270.00 due will be deducted from deposit account no.: 19-2570.

The Affidavit of Mark Andrew Seefeld states that "International Application PCT/US03/35201 was filed with my name incorrectly listed as Mark Antony Seefeld when it should have been listed as Mark Andrew Seefeld, the inconsistencies in my name occurred by error, without deceptive intent." As indicated in Section 201.03 of the Manual of Patent Examining Procedure, where a typographical or transliteration error in the spelling of an inventor's name is discovered, a petition under 37 CFR 1.48 is not required. In that this is clearly more than a mere typographical error or a phonetic misspelling of applicant's given name on the published international application, a proper petition under 37 CFR 1.182 is required in order to resolve the matter. The Manual of Patent Examining Procedure at §605.04(c) requires in instances where an inventor has changed his or her name after the application has been filed to submit a petition under 37 CFR 1.182. The petition must include (1) the appropriate petition fee and (2) an affidavit signed with both names setting forth the procedure whereby the change of name was effected, or a certified copy of the court order. Accordingly, applicants' explanation of the difference in the name of the third inventor is accepted and noted for the record. For the reasons above, the request is **GRANTED**.

This application is being forwarded to the United States Designated/Elected Office for further processing and for review of the national stage papers submitted 02 May 2005.

Anthony Smith

Anthony Smith
Attorney-Advisor
Office of PCT Legal Administration
Tel: (571) 272-3298
Fax: (571) 273-0459

3 1 DEC 2007

UNITED STATES PATENT AND TRADEMARK OFFICE

Commissioner for Patents
United States Patent and Trademark Office
P.O. Box 1450
Alexandria, VA 22313-1450
www.uspto.gov

GENENTECH, INC.
1 DNA WAY
SOUTH SAN FRANCISCO CA 94080

In re Application of	:	
CLARK, Hilary et al.	:	
Application No.: 10/533,520	:	
PCT No.: PCT/US2003/035971	:	
Int. Filing Date: 24 November 2003	:	DECISION
Priority Date: 26 November 2002	:	
Att. Docket No.: 39766-0274 R1	:	
For: COMPOSITIONS AND METHODS FOR THE TREATMENT OF IMMUNE RELATED DISEASES	:	

This decision is in response to applicant's "Petition of Page Substitution," filed in the United States Patent and Trademark Office on 01 November 2007. It has been treated as a petition under 37 CFR 1.181. A petition fee is not required.

The Office received the corrected page of the international publication from the International Bureau and has place it in the application file. As such, it is unnecessary to place the original page from the international application into the national phase file.

Applicant's petition is **DISMISSED AS MOOT**.

If reconsideration on the merits of this petition is desired, a proper response must be filed within TWO (2) MONTHS from the mail date of this decision.

Any further correspondence with respect to this matter should be addressed to the Mail Stop PCT, Commissioner for Patents, Office of PCT Legal Administration, P.O. Box 1450, Alexandria, Virginia 22313-1450, with the contents of the letter marked to the attention of the Office of PCT Legal Administration.

/Erin P. Thomson/

Erin P. Thomson
Attorney Advisor
PCT Legal Administration

Telephone: 571-272-3292
Facsimile: 571-273-0459

UNITED STATES PATENT AND TRADEMARK OFFICE

Commissioner for Patents
United States Patent and Trademark Office
P.O. Box 1450
Alexandria, VA 22313-1450
www.uspto.gov

Paper No.

COPY MAILED

MAY 04 2009

OFFICE OF PETITIONS

Goodwin Procter LLP
Attn: Patent Administrator
135 Commonwealth Drive
Menlo Park CA 94025-1105

In re Application of	:	
Sarah C. Bodary-Winter	:	
Application No. 10/533,520	:	DECISION ON PETITION
Filed: March 9, 2060	:	PURSUANT TO
Attorney Docket No.: GNE-	:	37 C.F.R. § 1.137(B)
0274 R1	:	
Title: COMPOSITIONS AND	:	
METHODS FOR THE TREATMENT OF	:	
IMMUNE RELATED DISEASES	:	

This is a decision on the petition pursuant to 37 C.F.R. § 1.137(b), filed October 28, 2008, on revive the above-identified application.

This petition pursuant to 37 C.F.R. § 1.137(b) is **GRANTED**.

The above-identified application became abandoned for failure to file a proper response to the Restriction Requirement, mailed April 8, 2008, which set a shortened statutory period to reply of one month. No response was received, and no extensions of time under the provisions of 37 C.F.R. § 1.136(a) were obtained. Accordingly, the above-identified application became abandoned on May 9, 2008.

A Notice of abandonment was mailed on December 15, 2008, subsequent to the filing of this petition.

A grantable petition pursuant to 37 C.F.R. § 1.137(b) must be accompanied by:

(1) The reply required to the outstanding Office action or notice, unless previously filed;
(2) The petition fee as set forth in 37 C.F.R. § 1.17(m);
(3) A statement that the entire delay in filing the required reply from the due date for the reply until the filing of a grantable petition pursuant to this paragraph was unintentional. The Commissioner may require additional information where there is a question whether the delay was unintentional, and;
(4) Any terminal disclaimer (and fee as set forth in 37 C.F.R. § 1.20(d)) required pursuant to paragraph (d) of this section.

With this petition, Petitioner has submitted the petition fee, an election of species, and amendment, and the proper statement of unintentional delay. A terminal disclaimer is not required. As such, the first three requirements of Rule 1.137(b) have been met. The fourth requirement of Rule 1.137(b) is not applicable, as a terminal disclaimer is not required.[1]

The Technology Center will be notified of this decision. The Technology Center's support staff will notify the Examiner of this decision, so that the submissions that were received on October 28, 2008 can be processed.

Petitioner may find it beneficial to view Private PAIR within a fortnight of the present decision to ensure that the revival has been acknowledged by the Technology Center in response to this decision. It is noted that all inquiries with regard to any failure of that change in status should be directed to the Technology Center where that change of status must be effected - **the Office of Petitions cannot effectuate a change of status**.

Telephone inquiries regarding *this decision* should be directed to the undersigned at (571) 272-3225.[2] All other inquiries

---

1 See Rule 1.137(d).
2 Petitioner will note that all practice before the Office should be in writing, and the action of the Office will be based exclusively on the written

concerning examination procedures or status of the application should be directed to the Technology Center.

/Paul Shanoski/
Paul Shanoski
Senior Attorney
Office of Petitions

---

record in the Office. See 37 C.F.R. § 1.2. As such, Petitioner is reminded that no telephone discussion may be controlling or considered authority for Petitioner's further action(s).

UNITED STATES PATENT AND TRADEMARK OFFICE

COMMISSIONER FOR PATENTS
UNITED STATES PATENT AND TRADEMARK OFFICE
P.O. BOX 1450
ALEXANDRIA, VA 22313-1450
www.uspto.gov

FOLEY & LARDNER LLP
1530 PAGE MILL ROAD
PALO ALTO, CA 94304

COPY MAILED
AUG 17 2007
OFFICE OF PETITIONS

Applicant: Matsuura, et al.
Application No.: 10/533,553
International Filing Date: October 28, 2003
Title: DEVICE AND METHOD FOR CONTROLLED EXPRESSION OF GASES FROM MEDICAL FLUIDS DELIVERY SYSTEMS
Attorney Docket No.: 355908-8201
Pub. No.: US 2006/0111667 A1
Pub. Date: May 25, 2006

This is a decision on the request for a corrected patent application publication under 37 CFR 1.221(b), received on July 25, 2006, for the above-identified application.

The request is granted.

The corrected patent application publication will be published in due course, unless the patent issues before the application is republished.

Applicant is advised that he may want to file application papers that are clearer, as the errors may be due to the quality of the text. The text in the application is small, which makes it difficult to read and to electronically reproduce by digital imaging and optical character recognition. Applicants have been advised to file applications having cleaner and larger text with sufficient clarity and contrast to permit reproduction, such as electronic reproduction by digital imaging and optical character recognition, which will avoid errors in the patent application publication process. See 37 CFR 1.52.

Inquiries relating to this matter may be directed to Mark O. Polutta at (571) 272-7709.

Mark O. Polutta

Mark Polutta
Senior Legal Advisor
Office of Patent Legal Administration
Office of the Deputy Commissioner
for Patent Examination Policy

UNITED STATES PATENT AND TRADEMARK OFFICE

UNITED STATES DEPARTMENT OF COMMERCE
United States Patent and Trademark Office
Address: COMMISSIONER FOR PATENTS
P.O. Box 1450
Alexandria, Virginia 22313-1450
www.uspto.gov

MCDONNELL BOEHNEN HULBERT & BERGHOFF LLP
300 S. WACKER DRIVE
32ND FLOOR
CHICAGO, IL 60606

Mail Date: 06/03/2010

Applicant	: Wei Xu	: DECISION ON REQUEST FOR
Patent Number	: 7626031	: RECALCULATION of PATENT
Issue Date	: 12/01/2009	: TERM ADJUSTMENT IN VIEW
Application No	: 10/533,555	: OF WYETH AND NOTICE OF INTENT TO
Filed	: 05/02/2005	: ISSUE CERTIFICATE OF CORRECTION
		:

The Request for Recalculation is **GRANTED** to the extent indicated.

The patent term adjustment has been determined to be **1108** days. The USPTO will *sua sponte* issue a certificate of correction reflecting the amount of PTA days determined by the recalculation.

Prior to the issuance of the certificate of correction, the USPTO will afford patentee an opportunity to be heard and request reconsideration. Accordingly, patentee has **one month or thirty (30) days**, whichever is longer, to file a request for reconsideration of this patent term adjustment calculation. See 35 U.S.C. 154(b)(3)(B)(ii) and 37 CFR 1.322(a)(4). No extensions of time will be granted under 37 CFR 1.136.

Patentee should use document code PET.OP if electronically filing a request for reconsideration of this patent term adjustment calculation. The patentee must also include the information required by 37 CFR 1.705(b)(2) and the fee required by 37 CFR 1.18(e). If patentee does not file a timely request for reconsideration of this patent term adjustment calculation including the information required by 37 CFR 1.705(b)(2) and the fee required by 37 CFR 1.18(e), the USPTO will issue a certificate of correction reflecting the PTA determination noted above.

Patentee should be aware that in order to preserve the right to review in the United States District Court for the District of Columbia of the USPTO patent term adjustment determination, patentee must ensure that he or she also take the steps required under 35 U.S.C. 154(b)(4)(A) in a timely manner. Nothing in the request for recalculation should be construed as providing an alternative time frame for commencing a civil action under 35 U.S.C. 154(b)(4)(A).

Any questions concerning this decision should be directed to the Office of Patent Legal Administration at 571-272-7702.

11 OCT 2005

UNITED STATES PATENT AND TRADEMARK OFFICE

COMMISSIONER FOR PATENTS
UNITED STATES PATENT AND TRADEMARK OFFICE
P.O. BOX 1450
ALEXANDRIA, VA 22313-1450
www.uspto.gov

LERNER AND GREENBERG, PA
P O BOX 2480
HOLLYWOOD, FL 33022-2480

In re Application of BERNHARD et al	:	
U.S. Application No.: 10/533,558	:	
PCT Application No.: PCT/AT03/00244	:	DECISION
Int. Filing Date: 26 August 2003	:	
Priority Date Claimed: 02 September 2002	:	
Attorney Docket No.: SB-521	:	
For: USE OF A HARD METAL ALLOY	:	

This is in response to applicant's "Petition for Revival of an Application for Patent Abandoned Unintentionally Under 37 CFR 1.137(b)" filed 02 May 2005.

BACKGROUND

On 26 August 2003, applicant filed international application PCT/AT03/00244, which claimed priority of an earlier Austria application filed 02 September 2002. A copy of the international application was communicated to the USPTO from the International Bureau on 11 March 2004. The thirty-month period for paying the basic national fee in the United States expired on 02 March 2005.

International application PCT/AT03/00244 became abandoned as to the United States for failure to timely pay the basic national fee.

On 02 May 2005, applicant filed the present petition under 37 CFR 1.137(b).

On 09 June 2005, applicant filed an executed declaration.

DISCUSSION

Under 37 CFR 1.137(b), a petition requesting that an application be revived on the grounds of unintentional abandonment must be accompanied by: (1) the required reply unless previously filed, (2) the petition fee as set forth in 37 CFR 1.17(m), (3) a statement that the entire delay in filing the required reply from the due date for the reply until the filing of a grantable petition was unintentional, and (4) a terminal disclaimer if the application was filed before 08 June 1995.

With regard to item (1), applicant has provided the required reply under 35 U.S.C. 371.

With regard to item (2), applicant has provided the required petition fee.

With regard to item (3), applicant has provided the required statement.

With regard to item (4), because the international application was filed after 08 June 1995, no terminal disclaimer is required.

CONCLUSION

For the reasons above, the petition under 37 CFR 1.137(b) is GRANTED.

The application has an International Filing Date under 35 U.S.C. 363 of 26 August 2003, and a date under 35 U.S.C. 371(c)(1), (c)(2), and (c)(4) of 09 June 2005.

This application is being forwarded to the United States Designated/Elected Office (DO/EO/US) for further processing in accordance with this decision.

Bryan Tung
PCT Legal Examiner
Office of PCT Legal Administration

Telephone: 571-272-3303
Facsimile: 571-273-0459

19 MAY 2006

UNITED STATES PATENT AND TRADEMARK OFFICE

COMMISSIONER FOR PATENTS
UNITED STATES PATENT AND TRADEMARK OFFICE
P.O. BOX 1450
ALEXANDRIA, VA 22313-1450
www.uspto.gov

LERNER GREENBERG STEMER LLP
P O BOX 2480
HOLLYWOOD, FL 33022-2480

In re Application of BERNHARD et al	:	
U.S. Application No.: 10/533,558	:	
PCT Application No.: PCT/AT03/00244	:	DECISION
Int. Filing Date: 26 August 2003	:	
Priority Date Claimed: 02 September 2002	:	
Attorney Docket No.: SB-521	:	
For: USE OF HARD METAL ALLOY	:	

This is in response to applicant's "Request for Filing Receipt Correction" submitted 21 November 2005.

The request states that the filing date should be listed as 02 May 2005. However, the filing date of the present application is the international filing date, i.e. 26 August 2003. The "filing date" listed on the filing receipt refers to the date of completion of the 35 U.S.C. 371 (c)(1), (c)(2), and (c)(4) requirements but is not the true filing date for legal purposes. See MPEP 1893.03(b) (stating "The "Application Filing Date" field formerly displayed in PAIR was changed to "Filing or 371(c) Date" to clearly indicate that for international applications that enter the national stage under 35 U.S.C. 371, the information displayed in this field is the date of receipt of the 35 U.S.C. 371(c)(1), (c)(2) and (c)(4) requirements. Applicants are quite often confused as to the true filing date and will ask for corrected filing receipts thinking that the information thereon is wrong. This explanation should offer some clarity. For most legal purposes, the filing date is the PCT international filing date.")

For the reasons above, the request is DISMISSED without prejudice.

The application is being returned to the appropriate Technology Center for continued processing.

Bryan Tung
PCT Legal Examiner
PCT Legal Office

Telephone: 571-272-3303
Facsimile: 571-273-0459

27 FEB 2006

UNITED STATES PATENT AND TRADEMARK OFFICE

Commissioner for Patents
United States Patent and Trademark Office
P.O. Box 1450
Alexandria, VA 22313-1450
www.uspto.gov

LERNER AND GREENBERG PA
P O BOX 2480
HOLLYWOOD FL 33022-2480

In re Application of	:	
ZOBL, Gebhard et al.	:	
Application No.: 10/533,560	:	DECISION
PCT No.: PCT/AT2003/000217	:	
Int. Filing Date: 30 July 2003	:	ON PETITION UNDER
Priority Date: 01 August 2002	:	
Docket No.: SB-514	:	37 CFR 1.137(b)
For: METHOD FOR PRODUCING A	:	
MOULDED PART	:	

Applicants' "Petition For Revival of an International Application For Patent Designating the U.S. Abandoned Unintentionally Under 37 CFR 1.137(b)," filed in the above-captioned application on 02 May 2005 is **GRANTED**.

Applicants state "the entire delay in filing the required reply from the due date for the required reply until the filing of a grantable petition under 37 CFR 1.137(b) was unintentional," as required by 37 CFR 1.137(b)(3). The appropriate national fee and petition fee have been submitted. A terminal disclaimer is not required as the application was filed on or after 08 June 1995. Accordingly, all requirements under 37 CFR 1.137(b) have been satisfied.

On 20 May 2005, applicants supplied a declaration in compliance with 37 CFR 1.497(a)-(b) and the fee for late furnishing of the declaration. The fee for late furnishing of the English translation will be charged to deposit account no. 12-1099, as authorized.

This application is being forwarded to the National Stage Processing Branch of the Office of PCT Operations for continued processing in accordance with this decision. The application has a 35 U.S.C. 371(c)(1), (c)(2) and (c)(4) date of 20 May 2005.

Erin P. Thomson

Erin P. Thomson
Attorney Advisor
PCT Legal Administration

Telephone: 571-272-3292
Facsimile: 571-273-0459

UNITED STATES PATENT AND TRADEMARK OFFICE

UNITED STATES DEPARTMENT OF COMMERCE
United States Patent and Trademark Office
Address: COMMISSIONER FOR PATENTS
P.O. Box 1450
Alexandria, Virginia 22313-1450
www.uspto.gov

APPLICATION NO.	FILING DATE	FIRST NAMED INVENTOR	ATTORNEY DOCKET NO.	CONFIRMATION NO.
10/533,560	05/20/2005	Gebhard Zobl	SB-514	4363

24131 7590 06/16/2010
LERNER GREENBERG STEMER LLP
P O BOX 2480
HOLLYWOOD, FL 33022-2480

EXAMINER
KEMMERLE III, RUSSELL J

ART UNIT	PAPER NUMBER
1791	

MAIL DATE	DELIVERY MODE
06/16/2010	PAPER

Please find below and/or attached an Office communication concerning this application or proceeding.

The time period for reply, if any, is set in the attached communication.

UNITED STATES PATENT AND TRADEMARK OFFICE

Commissioner for Patents
United States Patent and Trademark Office
P.O. Box 1450
Alexandria, VA 22313-1450
www.uspto.gov

wk

JUN 16 2010

In re application of	:	
Zobl et al.	:	DECISION ON
Serial No. 10/533,560	:	PETITION
Filed: May 2, 2005	:	
For: PROCESS FOR PRODUCING A MOLDING		

This is a decision on the request filed on February 17, 2010. The request was filed under 37 CFR 1.183 however it is being decided under 37 CFR 1.181. Applicants never received the November 2, 2009 Notice of Panel Decision. The request is to reset and remail the November 2, 2009 panel decision.

DECISION

The instant request is accepted as a timely petition under 37 C.F.R. 1.181 and is evaluated under the procedures regarding an acceptable showing of non-receipt of an office action, TMOG 1156 O.G. 53, November 16, 1993, (see also MPEP 711.03(c) - NEW PROCEDURE TMOG 1170 O.G. 114).

A review of the petitioner's evidence indicates that the request has merit

The Petition is **GRANTED**.

The Panel Decision will be remailed and the period of response will start from the mail date of the Panel Decision.

/JACQUELINE STONE/

Jacqueline M. Stone, Director
Technology Center 1700
Chemical and Materials Engineering

LERNER GREENBERG STEMER LLP
P O BOX 2480
HOLLYWOOD FL 33022-2480

#6

UNITED STATES PATENT AND TRADEMARK OFFICE

COMMISSIONER FOR PATENTS
UNITED STATES PATENT AND TRADEMARK OFFICE
P.O. BOX 1450
ALEXANDRIA, VA 22313-1450
www.uspto.gov

8 FEB 2006

Martin Moynihan
c/o Anthony Castorina
2001 Jefferson Davis Highway, Suite 207
Arlington, VA 22202

In re Application of KIMCHY et al	:	
U.S. Application No.: 10/533,568	:	
PCT Application No.: PCT/IL03/00917	:	
Int. Filing Date: 04 November 2003	:	
Priority Date Claimed: 04 November 2002	:	DECISION
Attorney Docket No.: 29684	:	
For: APPARATUS AND METHODS FOR IMAGING AND ATTENUATION CORRECTION	:	

This is in response to applicant's "Petition Under 37 C.F.R. §1.47(a)" filed 05 January 2006.

BACKGROUND

On 04 November 2003, applicant filed international application PCT/IL03/00917, which claimed priority of an earlier United States application filed 04 November 2002. A copy of the international application was communicated to the USPTO from the International Bureau on 21 May 2004. The thirty-month period for paying the basic national fee in the United States expired on 04 May 2005.

On 03 May 2005, applicant filed national stage papers in the United States Designated/Elected Office (DO/EO/US). The submission was accompanied by, *inter alia*, the basic national fee required by 35 U.S.C. 371(c)(1).

On 06 October 2005, the DO/EO/US mailed a Notification of Missing Requirements Under 35 U.S.C. 371 (Form PCT/DO/EO/905), which indicated that an oath or declaration in compliance with 37 CFR 1.497 must be filed.

On 05 January 2006, applicant filed the present petition under 37 CFR 1.47(a).

DISCUSSION

A petition under 37 CFR 1.47(a) must be accompanied by: (1) an oath or declaration by each applicant on his or her own behalf and on behalf of the nonsigning joint inventors, (2) factual proof that the missing joint inventors refuse to join in the application or cannot be reached after diligent effort, (3) the fee set forth in §1.17(i), and (4) the last known addresses of the nonsigning joint inventors.

With regard to item (1) above, applicant has submitted a declaration signed by the available inventors each on his/her own behalf and on behalf of the nonsigning inventor.

With regard to item (2) above, MPEP 409.03(d) states in relevant part,

> Where a refusal to sign the application papers is alleged, the circumstances of this refusal must be specified in an affidavit or declaration by the person to whom the refusal was made. Statements by a party not present when an oral refusal is made will not be accepted.
>
> Before a refusal can be alleged, it must be demonstrated that a bona fide attempt was made to present a copy of the application papers (specification, including claims, drawings, and oath or declaration) to the nonsigning inventor for signature. A copy of the application papers should be sent to the last known address of the nonsigning inventor, or, if the nonsigning inventor is represented by counsel, to the address of the nonsigning inventor's attorney.
>
> When there is an express oral refusal, that fact along with the time and place of the refusal must be stated in the affidavit or declaration. When there is an express written refusal, a copy of the document evidencing that refusal must be made part of the affidavit or declaration.
>
> When it is concluded by the 37 CFR 1.47 applicant that a nonsigning inventor's conduct constitutes a refusal, all facts upon which that conclusion is based should be stated in the affidavit or declaration. If there is documentary evidence to support facts alleged in the affidavit or declaration, such evidence should be submitted. Whenever a nonsigning inventor gives a reason for refusing to sign the application oath or declaration, that reason should be stated in the affidavit or declaration.

The petition states that joint inventor Roni Amrami refuses to sign the application papers. Petitioner has not adequately demonstrated that a bona fide attempt was made to present a copy of the application papers to Amrami for signature. Specifically, although Mr. Amrami was mailed a copy of the application papers via registered mail (see affidavit of Jonathan Milberg), the petition does not establish that Mr. Amrami received the correspondence. Furthermore, English translations of the purported delivery receipts have not been provided. It would not be reasonable to conclude that Mr. Amrami refuses to sign papers that he has not received. It is noted that applicant is entitled to provide evidence that Mr. Amrami cannot be reached after diligent effort.

With regard to item (3) above, the requisite $200.00 petition fee will be charged to Deposit Account No. 50-1407 as authorized by applicant.

With regard to item (4) above, the petition states the last known address of the nonsigning inventor.

CONCLUSION

For the reasons above, the petition under 37 CFR 1.47(a) is DISMISSED without prejudice.

If reconsideration on the merits of this petition is desired, a proper response must be filed within TWO (2) MONTHS from the mail date of this decision. Extensions of time are available under 37 CFR 1.136(a). Any reconsideration request should include a cover letter entitled "Renewed Petition Under 37 CFR 1.47(a)". No additional petition fee is required.

Please direct further correspondence with respect to this matter to Mail Stop PCT, Commissioner for Patents, Office of PCT Legal Administration, P.O. Box 1450, Alexandria, Virginia 22313-1450, with the contents of the letter marked to the attention of the Office of PCT Legal Administration.

Bryan Tung
PCT Legal Examiner
PCT Legal Office

Telephone: 571-272-3303
Facsimile: 571-273-0459

24 MAR 2006

#8

UNITED STATES PATENT AND TRADEMARK OFFICE

COMMISSIONER FOR PATENTS
UNITED STATES PATENT AND TRADEMARK OFFICE
P.O. BOX 1450
ALEXANDRIA, VA 22313-1450
www.uspto.gov

Martin Moynihan
c/o Anthony Castorina
2001 Jefferson Davis Highway, Suite 207
Arlington, VA 22202

In re Application of KIMCHY et al	:	
U.S. Application No.: 10/533,568	:	
PCT Application No.: PCT/IL03/00917	:	
Int. Filing Date: 04 November 2003	:	
Priority Date Claimed: 04 November 2002	:	DECISION
Attorney Docket No.: 29684	:	
For: APPARATUS AND METHODS FOR IMAGING AND ATTENUATION CORRECTION	:	

This is in response to applicant's "Renewed Petition Under 37 CFR 1.47(a)" filed 07 March 2006.

BACKGROUND

On 04 November 2003, applicant filed international application PCT/IL03/00917, which claimed priority of an earlier United States application filed 04 November 2002. A copy of the international application was communicated to the USPTO from the International Bureau on 21 May 2004. The thirty-month period for paying the basic national fee in the United States expired on 04 May 2005.

On 03 May 2005, applicant filed national stage papers in the United States Designated/Elected Office (DO/EO/US). The submission was accompanied by, *inter alia*, the basic national fee required by 35 U.S.C. 371(c)(1).

On 06 October 2005, the DO/EO/US mailed a Notification of Missing Requirements Under 35 U.S.C. 371 (Form PCT/DO/EO/905), which indicated that an oath or declaration in compliance with 37 CFR 1.497 must be filed.

On 05 January 2006, applicant filed a petition under 37 CFR 1.47(a).

On 08 February 2006, this Office mailed a decision dismissing the 05 January 2006 petition.

On 07 March 2006, applicant filed the present renewed petition under 37 CFR 1.47(a).

DISCUSSION

A petition under 37 CFR 1.47(a) must be accompanied by: (1) an oath or declaration by each applicant on his or her own behalf and on behalf of the nonsigning joint inventors, (2) factual proof that the missing joint inventors refuse to join in the application or cannot be reached after diligent effort, (3) the fee set forth in §1.17(i), and (4) the last known addresses of the nonsigning joint inventors.

Petitioner has previously satisfied items (1), (3), and (4) above.

With regard to item (2) above, MPEP 409.03(d) states in relevant part,

> Where a refusal to sign the application papers is alleged, the circumstances of this refusal must be specified in an affidavit or declaration by the person to whom the refusal was made. Statements by a party not present when an oral refusal is made will not be accepted.
>
> Before a refusal can be alleged, it must be demonstrated that a bona fide attempt was made to present a copy of the application papers (specification, including claims, drawings, and oath or declaration) to the nonsigning inventor for signature. A copy of the application papers should be sent to the last known address of the nonsigning inventor, or, if the nonsigning inventor is represented by counsel, to the address of the nonsigning inventor's attorney.
>
> When there is an express oral refusal, that fact along with the time and place of the refusal must be stated in the affidavit or declaration. When there is an express written refusal, a copy of the document evidencing that refusal must be made part of the affidavit or declaration.
>
> When it is concluded by the 37 CFR 1.47 applicant that a nonsigning inventor's conduct constitutes a refusal, all facts upon which that conclusion is based should be stated in the affidavit or declaration. If there is documentary evidence to support facts alleged in the affidavit or declaration, such evidence should be submitted. Whenever a nonsigning inventor gives a reason for refusing to sign the application oath or declaration, that reason should be stated in the affidavit or declaration.

The petition states that joint inventor Roni Amrami refuses to sign the application papers. Petitioner has not adequately demonstrated that a bona fide attempt was made to present a copy of the application papers to Amrami for signature. Specifically, although Mr. Amrami was mailed a copy of the application papers via registered mail (see affidavit of Jonathan Milberg), the petition does not establish that Mr. Amrami received the correspondence. The translation provided with the renewed petition confirms that Amrami never received the application papers. As stated in the decision mailed 08 February 2006, it would not be reasonable to conclude that Mr. Amrami refuses to sign papers that he has not received. Applicant has not asserted that Mr. Amrami cannot be reached after diligent effort but is entitled to do so.

CONCLUSION

For the reasons above, the renewed petition under 37 CFR 1.47(a) is DISMISSED without prejudice.

If reconsideration on the merits of this petition is desired, a proper response must be filed within TWO (2) MONTHS from the mail date of this decision. Extensions of time are available under 37 CFR 1.136(a). Any reconsideration request should include a cover letter entitled "Renewed Petition Under 37 CFR 1.47(a)". No additional petition fee is required.

Please direct further correspondence with respect to this matter to Mail Stop PCT, Commissioner for Patents, Office of PCT Legal Administration, P.O. Box 1450, Alexandria, Virginia 22313-1450, with the contents of the letter marked to the attention of the Office of PCT Legal Administration.

Bryan Tung
PCT Legal Examiner
PCT Legal Office

Telephone: 571-272-3303
Facsimile: 571-273-0459

01 MAY 2006

UNITED STATES PATENT AND TRADEMARK OFFICE

COMMISSIONER FOR PATENTS
UNITED STATES PATENT AND TRADEMARK OFFICE
P.O. BOX 1450
ALEXANDRIA, VA 22313-1450
www.uspto.gov

Martin Moynihan
c/o Anthony Castorina
2001 Jefferson Davis Highway, Suite 207
Arlington, VA 22202

In re Application of KIMCHY et al	:	
U.S. Application No.: 10/533,568	:	
PCT Application No.: PCT/IL03/00917	:	
Int. Filing Date: 04 November 2003	:	
Priority Date Claimed: 04 November 2002	:	DECISION
Attorney Docket No.: 29684	:	
For: APPARATUS AND METHODS FOR	:	
IMAGING AND ATTENUATION	:	
CORRECTION	:	

This is in response to applicant's "Renewed Petition Under 37 CFR 1.47(a)" filed 13 April 2006.

BACKGROUND

On 04 November 2003, applicant filed international application PCT/IL03/00917, which claimed priority of an earlier United States application filed 04 November 2002. A copy of the international application was communicated to the USPTO from the International Bureau on 21 May 2004. The thirty-month period for paying the basic national fee in the United States expired on 04 May 2005.

On 03 May 2005, applicant filed national stage papers in the United States Designated/Elected Office (DO/EO/US). The submission was accompanied by, *inter alia*, the basic national fee required by 35 U.S.C. 371(c)(1).

On 06 October 2005, the DO/EO/US mailed a Notification of Missing Requirements Under 35 U.S.C. 371 (Form PCT/DO/EO/905), which indicated that an oath or declaration in compliance with 37 CFR 1.497 must be filed.

On 05 January 2006, applicant filed a petition under 37 CFR 1.47(a).

On 08 February 2006, this Office mailed a decision dismissing the 05 January 2006 petition.

On 07 March 2006, applicant filed a renewed petition under 37 CFR 1.47(a).

On 24 March 2006, this Office mailed a decision dismissing the 07 March 2006 petition.

On 13 April 2006, applicant filed the present renewed petition under 37 CFR 1.47(a).

DISCUSSION

A petition under 37 CFR 1.47(a) must be accompanied by: (1) an oath or declaration by each applicant on his or her own behalf and on behalf of the nonsigning joint inventors, (2) factual proof that the missing joint inventors refuse to join in the application or cannot be reached after diligent effort, (3) the fee set forth in §1.17(i), and (4) the last known addresses of the nonsigning joint inventors.

Petitioner has previously satisfied items (1), (3), and (4) above.

With regard to item (2) above, MPEP 409.03(d) states in relevant part,

> Where inability to find or reach a nonsigning inventor "after diligent effort" is the reason for filing under 37 CFR 1.47, an affidavit or declaration of facts should be submitted which fully describes the exact facts which are relied on to establish that a diligent effort was made. . . . The affidavit or declaration of facts must be signed, where at all possible, by a person having firsthand knowledge of the facts recited therein. Statements based on hearsay will not normally be accepted. Copies of documentary evidence such as certified mail return receipt, cover letter of instructions, telegrams, etc., that support a finding that the nonsigning inventor could not be found or reached should be made part of the affidavit or declaration. It is important that the affidavit or declaration contain statements of fact as opposed to conclusions.

The renewed petition states that joint inventor Roni Amrami cannot be found after diligent effort. The renewed petition is accompanied by an affidavit signed by Cindy Weisrose, which states that Ms. Weisrose attempted to contact Mr. Amrami by telephone and through his former employer. Petitioner has previously provided evidence of an attempt to reach Mr. Amrami by mail. The efforts to contact Mr. Amrami by multiple methods are sufficient to establish with reasonable certainty that Mr. Amrami cannot be found after diligent effort.

CONCLUSION

For the reasons above, the renewed petition under 37 CFR 1.47(a) is GRANTED.

The application has an International Filing Date under 35 U.S.C. 363 of 04 November 2003, and a date under 35 U.S.C. 371(c)(1), (c)(2), and (c)(4) of 05 January 2006.

As set forth in 37 CFR 1.47(a), a notice of the filing of this application will be forwarded to the nonsigning inventor at the last known address of record and will be published in the *Official Gazette*.

This application is being forwarded to the United States Designated/Elected Office (DO/EO/US) for further processing in accordance with this decision.

Bryan Tung
PCT Legal Examiner
PCT Legal Office

Telephone: 571-272-3303
Facsimile: 571-273-0459

01 MAY 2006

UNITED STATES PATENT AND TRADEMARK OFFICE

COMMISSIONER FOR PATENTS
UNITED STATES PATENT AND TRADEMARK OFFICE
P.O. BOX 1450
ALEXANDRIA, VA 22313-1450
www.uspto.gov

Roni Amrami
37/2 Yarden Street
20692 Yokneam
Israel

In re Application of KIMCHY et al
U.S. Application No.: 10/533,568
PCT Application No.: PCT/IL03/00917
Int. Filing Date: 04 November 2003
Priority Date Claimed: 04 November 2002
For: APPARATUS AND METHODS FOR IMAGING AND ATTENUATION. . .

Dear Roni Amrami:

You are named as a joint inventor in the above-captioned United States national stage application, filed under the provisions of 37 CFR 1.47(a) and 35 U.S.C. 116. Should a patent be granted, you will be designated as an inventor.

As a named inventor, you are entitled to inspect any paper in the file wrapper of the application, order copies of all or any part thereof (at a prepaid cost set forth in 37 CFR 1.19) or to make your position of record in the application. Alternatively, you may arrange to do any of the preceding through a registered patent agent or attorney presenting written authorization from you. If you choose to join in the application, counsel of record (see below) would presumably assist you. Joining in the application would entail the filing of an appropriate oath or declaration by you pursuant to 37 CFR 1.63.

Bryan Tung
PCT Legal Examiner
PCT Legal Office
Telephone: 571-272-3303
Facsimile: 571-273-0459

Martin Moynihan
c/o Anthony Castorina
2001 Jefferson Davis Highway, Suite 207
Arlington, VA 22202

Attorney Docket No.: 29684

UNITED STATES PATENT AND TRADEMARK OFFICE

Commissioner for Patents
United States Patent and Trademark Office
P.O. Box 1450
Alexandria, VA 22313-1450
www.uspto.gov

01 NOV 2006

LADAS & PARRY
5670 WILSHIRE BOULEVARD, SUITE 2100
LOS ANGELES CA 90036-5679

In re Application of	:	
BATEMAN et al.	:	
Application No.: 10/533,579	:	DECISION ON PETITION
PCT No.: PCT/AU2003/001443	:	
Int. Filing Date: 31 October 2003	:	UNDER
Priority Date: 31 October 2002	:	
Attorney Docket No.: B-5691PCT 622624-8	:	37 CFR 1.497(d)
For: FIRE RESISTANT MATERIAL	:	

This decision is in response to applicants' "REQUEST TO DELETE INVENTORS" filed in the United States Patent and Trademark Office (USPTO) on 07 March 2006 and the supplemental submission filed 31 March 2006, which have properly been treated as a petition under 37 CFR 1.497(d).

BACKGROUND

On 31 October 2003, applicants filed international application PCT/AU2003/001443, which designated the United States and claimed a priority date of 31 October 2002. A copy of the international application was communicated to the USPTO from the International Bureau on 13 May 2004. The thirty-month period for paying the basic national fee in the United States expired at midnight on 02 May 2005 (30 April 2005 being a Saturday).

On 02 May 2005, applicants filed a transmittal letter for entry into the national stage in the United States which was accompanied by, *inter alia*, the basic national fee and an unsigned declaration of inventors.

On 07 December 2005, the United States Designated/Elected Office (DO/EO/US) mailed a NOTIFICATION OF MISSING REQUIREMENTS UNDER 35 U.S.C. 371 (Form PCT/DO/EO/905) indicating, *inter alia*, that an oath or declaration of the inventors in compliance with 37 CFR 1.497(a)-(b) and the surcharge under 37 CFR 1.492(h) for filing any of the search fee, the examination fee, or the oath or declaration after the date of the commencement of the national stage were required.

On 07 March 2006, applicants filed a "REQUEST TO DELETE INVENTORS", which has properly been treated as a petition under 37 CFR 1.497(d), and the surcharge under 37 CFR

1.492(h). The petition was accompanied by a declaration of Matthew Allen Anglin, a declaration of James Macon Peterson, and a declaration of inventors identifying Stuart Arthur Bateman, Matthew Jon Partlett, and Dong Wang Yu as the inventors and signed by them.

On 31 March 2006, applicants filed a supplemental submission which included a declaration of Barbara Lord MacLean.

On 27 July 2006, the DO/EO/US mailed a NOTIFICATION OF DEFECTIVE RESPONSE (Form PCT/DO/EO/916) indicating that the declaration of inventors filed 07 March 2006 did not identify all of the inventors.

DISCUSSION

The NOTIFICATION OF DEFECTIVE RESPONSE mailed 27 July 2006 was mailed in error (i.e., applicant's petition under 37 CFR 1.497(d) had not been taken into account) and is hereby VACATED.

37 CFR 1.497(d), provides:

> (d) If the oath or declaration filed pursuant to 35 U.S.C. 371(c)(4) and this section names an inventive entity different from the inventive entity set forth in the international application, or if a change to the inventive entity has been effected under PCT Rule 92bis subsequent to the execution of any oath or declaration which was filed in the application under PCT Rule 4.17(iv) or this section and the inventive entity thus changed is different from the inventive entity identified in any such oath or declaration, applicant must submit:
> (1) A statement from each person being added as an inventor and from each person being deleted as an inventor that any error in inventorship in the international application occurred without deceptive intention on his or her part;
> (2) The processing fee set forth in Sec. 1.17(i); and
> (3) If an assignment has been executed by any of the original named inventors, the written consent of the assignee (see Sec. 3.73(b) of this chapter); and
> (4) Any new oath or declaration required by paragraph (f) of this section.

Applicants have not satisfied item (1). The statements by the three deleted inventors each fail to state that the error in inventorship in the international application occurred without deceptive intention but not that the error occurred without deceptive intention *on his or her part*.

As to item (2), the processing fee of $130 has been charged to Deposit Account No. 12-0415.

Item (3) has not been satisfied. No mention is made in the petition regarding whether an assignment has been executed. If an assignment has been executed, the written consent of the assignee is required. See MPEP § 324 for a proper showing under 37 CFR 3.73(b).

As to item (4), a new declaration is not required by 37 CFR 1.497(f) in the instant situation.

CONCLUSION

The request under 37 CFR 1.497(d) is **DISMISSED** without prejudice for the reasons set forth above.

The NOTIFICATION OF DEFECTIVE RESPONSE mailed 27 July 2006 is VACATED for the reasons set forth above.

If reconsideration on the merits of this petition is desired, a proper reply must be filed within TWO (2) MONTHS from the mail date of this decision. Any reconsideration request should include a cover letter entitled "Renewed Petition Under 37 CFR 1.497(d)." No additional petition fee is required.

Please direct further correspondence with respect to this matter to Mail Stop PCT, Commissioner for Patents, Office of PCT Legal Administration, P.O. Box 1450, Alexandria, Virginia 22313-1450, with the contents of the letter marked to the attention of the Office of PCT Legal Administration.

Daniel Stemmer
Legal Examiner
PCT Legal Affairs
Office of Patent Cooperation Treaty
Legal Administration
Telephone: (571) 272-3301
Facsimile: (571) 273-0459

0 5 MAR 2007

UNITED STATES PATENT AND TRADEMARK OFFICE

Commissioner for Patents
United States Patent and Trademark Office
P.O. Box 1450
Alexandria, VA 22313-1450
www.uspto.gov

LADAS & PARRY
5670 WILSHIRE BOULEVARD, SUITE 2100
LOS ANGELES CA 90036-5679

In re Application of	:	
BATEMAN et al.	:	
Application No.: 10/533,579	:	DECISION ON PETITION
PCT No.: PCT/AU2003/001443	:	
Int. Filing Date: 31 October 2003	:	UNDER
Priority Date: 31 October 2002	:	
Attorney Docket No.: B-5691PCT 622624-8	:	37 CFR 1.497(d)
For: FIRE RESISTANT MATERIAL	:	

This decision is in response to applicants' "RENEWED PETITION UNDER 37 CFR 1.497(d)" filed in the United States Patent and Trademark Office (USPTO) on 06 February 2007.

BACKGROUND

On 31 October 2003, applicants filed international application PCT/AU2003/001443, which designated the United States and claimed a priority date of 31 October 2002. A copy of the international application was communicated to the USPTO from the International Bureau on 13 May 2004. The thirty-month period for paying the basic national fee in the United States expired at midnight on 02 May 2005 (30 April 2005 being a Saturday).

On 02 May 2005, applicants filed a transmittal letter for entry into the national stage in the United States which was accompanied by, *inter alia*, the basic national fee and an unsigned declaration of inventors.

On 07 December 2005, the United States Designated/Elected Office (DO/EO/US) mailed a NOTIFICATION OF MISSING REQUIREMENTS UNDER 35 U.S.C. 371 (Form PCT/DO/EO/905) indicating, *inter alia*, that an oath or declaration of the inventors in compliance with 37 CFR 1.497(a)-(b) and the surcharge under 37 CFR 1.492(h) for filing any of the search fee, the examination fee, or the oath or declaration after the date of the commencement of the national stage were required.

On 07 March 2006, applicants filed a "REQUEST TO DELETE INVENTORS", which has properly been treated as a petition under 37 CFR 1.497(d), and the surcharge under 37 CFR 1.492(h). The petition was accompanied by a declaration of Matthew Allen Anglin, a declaration of James Macon Peterson, and a declaration of inventors identifying Stuart Arthur Bateman,

Matthew Jon Partlett, and Dong Wang Yu as the inventors and signed by them.

On 31 March 2006, applicants filed a supplemental submission which included a declaration of Barbara Lord MacLean.

On 27 July 2006, the DO/EO/US mailed a NOTIFICATION OF DEFECTIVE RESPONSE (Form PCT/DO/EO/916) indicating that the declaration of inventors filed 07 March 2006 did not identify all of the inventors.

On 01 November 2006, a decision was mailed properly treating applicants' submissions filed 07 March 2006 and 31 March 2006 as a petition under 37 CFR 1.497(d). The decision dismissed applicants' petition without prejudice and vacated the NOTIFICATION OF DEFECTIVE RESPONSE mailed 27 July 2006.

On 06 February 2007, applicants submitted the instant "RENEWED PETITION UNDER 37 CFR 1.497(d)" which was accompanied by, *inter alia*, a declaration of Matthew Allen Anglin, a declaration of James Macon Peterson, declaration of Barbara Lord MacLean, a statement under 37 CFR 3.73(b) from Commonwealth Scientific & Industrial Research Org., and a statement under 37 CFR 3.73(b) from The Boeing Company.

DISCUSSION

37 CFR 1.497(d), provides:

> (d) If the oath or declaration filed pursuant to 35 U.S.C. 371(c)(4) and this section names an inventive entity different from the inventive entity set forth in the international application, or if a change to the inventive entity has been effected under PCT Rule 92*bis* subsequent to the execution of any oath or declaration which was filed in the application under PCT Rule 4.17(iv) or this section and the inventive entity thus changed is different from the inventive entity identified in any such oath or declaration, applicant must submit:
>
> (1) A statement from each person being added as an inventor and from each person being deleted as an inventor that any error in inventorship in the international application occurred without deceptive intention on his or her part;
>
> (2) The processing fee set forth in Sec. 1.17(i); and
>
> (3) If an assignment has been executed by any of the original named inventors, the written consent of the assignee (see Sec. 3.73(b) of this chapter); and
>
> (4) Any new oath or declaration required by paragraph (f) of this section.

As noted in the decision mailed 01 November 2006, item (2) has been satisfied and item (4) is not required.

Item (1) has now been satisfied.

Item (3) has still not been satisfied. Although a proper showing under 37 CFR 3.73(b) has been made, the written consent of the assignees has not been provided.

CONCLUSION

The request under 37 CFR 1.497(d) is **DISMISSED** without prejudice for the reasons set forth above.

If reconsideration on the merits of this petition is desired, a proper reply must be filed within TWO (2) MONTHS from the mail date of this decision. Any reconsideration request should include a cover letter entitled "Renewed Petition Under 37 CFR 1.497(d)." No additional petition fee is required.

Please direct further correspondence with respect to this matter to Mail Stop PCT, Commissioner for Patents, Office of PCT Legal Administration, P.O. Box 1450, Alexandria, Virginia 22313-1450, with the contents of the letter marked to the attention of the Office of PCT Legal Administration.

Daniel Stemmer
Legal Examiner
PCT Legal Affairs
Office of Patent Cooperation Treaty
Legal Administration
Telephone: (571) 272-3301
Facsimile: (571) 273-0459

1 0 MAY 2007

UNITED STATES PATENT AND TRADEMARK OFFICE

Commissioner for Patents
United States Patent and Trademark Office
P.O. Box 1450
Alexandria, VA 22313-1450
www.uspto.gov

LADAS & PARRY
5670 WILSHIRE BOULEVARD, SUITE 2100
LOS ANGELES CA 90036-5679

In re Application of	:	
BATEMAN et al.	:	
Application No.: 10/533,579	:	DECISION ON PETITION
PCT No.: PCT/AU2003/001443	:	
Int. Filing Date: 31 October 2003	:	UNDER
Priority Date: 31 October 2002	:	
Attorney Docket No.: B-5691PCT 622624-8	:	37 CFR 1.497(d)
For: FIRE RESISTANT MATERIAL	:	

This decision is in response to applicants' "RENEWED PETITION UNDER 37 CFR 1.497(d)" filed in the United States Patent and Trademark Office (USPTO) on 17 April 2007.

BACKGROUND

On 31 October 2003, applicants filed international application PCT/AU2003/001443, which designated the United States and claimed a priority date of 31 October 2002. A copy of the international application was communicated to the USPTO from the International Bureau on 13 May 2004. The thirty-month period for paying the basic national fee in the United States expired at midnight on 02 May 2005 (30 April 2005 being a Saturday).

On 02 May 2005, applicants filed a transmittal letter for entry into the national stage in the United States which was accompanied by, *inter alia*, the basic national fee and an unsigned declaration of inventors.

On 07 December 2005, the United States Designated/Elected Office (DO/EO/US) mailed a NOTIFICATION OF MISSING REQUIREMENTS UNDER 35 U.S.C. 371 (Form PCT/DO/EO/905) indicating, *inter alia*, that an oath or declaration of the inventors in compliance with 37 CFR 1.497(a)-(b) and the surcharge under 37 CFR 1.492(h) for filing any of the search fee, the examination fee, or the oath or declaration after the date of the commencement of the national stage were required.

On 07 March 2006, applicants filed a "REQUEST TO DELETE INVENTORS", which has properly been treated as a petition under 37 CFR 1.497(d), and the surcharge under 37 CFR 1.492(h). The petition was accompanied by a declaration of Matthew Allen Anglin, a declaration of James Macon Peterson, and a declaration of inventors identifying Stuart Arthur Bateman, Matthew Jon Partlett, and Dong Wang Yu as the inventors and signed by them.

On 31 March 2006, applicants filed a supplemental submission which included a declaration of Barbara Lord MacLean.

On 27 July 2006, the DO/EO/US mailed a NOTIFICATION OF DEFECTIVE RESPONSE (Form PCT/DO/EO/916) indicating that the declaration of inventors filed 07 March 2006 did not identify all of the inventors.

On 01 November 2006, a decision was mailed properly treating applicants' submissions filed 07 March 2006 and 31 March 2006 as a petition under 37 CFR 1.497(d). The decision dismissed applicants' petition without prejudice and vacated the NOTIFICATION OF DEFECTIVE RESPONSE mailed 27 July 2006.

On 06 February 2007, applicants submitted a "RENEWED PETITION UNDER 37 CFR 1.497(d)" which was accompanied by, *inter alia*, a declaration of Matthew Allen Anglin, a declaration of James Macon Peterson, declaration of Barbara Lord MacLean, a statement under 37 CFR 3.73(b) from Commonwealth Scientific & Industrial Research Org., and a statement under 37 CFR 3.73(b) from The Boeing Company.

On 05 March 2007, a decision was mailed dismissing applicants' petition under 37 CFR 1.497(d) without prejudice. Specifically, it was noted that the written consent of the assignees had not been provided.

DISCUSSION

37 CFR 1.497(d), provides:

> (d) If the oath or declaration filed pursuant to 35 U.S.C. 371(c)(4) and this section names an inventive entity different from the inventive entity set forth in the international application, or if a change to the inventive entity has been effected under PCT Rule 92bis subsequent to the execution of any oath or declaration which was filed in the application under PCT Rule 4.17(iv) or this section and the inventive entity thus changed is different from the inventive entity identified in any such oath or declaration, applicant must submit:
>
> (1) A statement from each person being added as an inventor and from each person being deleted as an inventor that any error in inventorship in the international application occurred without deceptive intention on his or her part;
>
> (2) The processing fee set forth in Sec. 1.17(i); and
>
> (3) If an assignment has been executed by any of the original named inventors, the written consent of the assignee (see Sec. 3.73(b) of this chapter); and
>
> (4) Any new oath or declaration required by paragraph (f) of this section.

As noted in the decision mailed 01 November 2006, item (2) has been satisfied and item (4) is not required.

As noted in the decision mailed 05 March 2007, item (1) has been satisfied.

Item (3) has now been satisfied as well.

CONCLUSION

The request under 37 CFR 1.497(d) is **GRANTED** for the reasons set forth above.

This application is being forwarded to the National Stage Processing Branch of the Office of PCT Operations to continue national stage processing of the application in accordance with this decision including processing the application in the name of Stuart Arthur Batemen, Matthew Jon Partlett, and Dong Wang Wu as inventors.

Daniel Stemmer
Legal Examiner
PCT Legal Affairs
Office of Patent Cooperation Treaty
Legal Administration
Telephone: (571) 272-3301
Facsimile: (571) 273-0459

UNITED STATES PATENT AND TRADEMARK OFFICE

UNITED STATES DEPARTMENT OF COMMERCE
United States Patent and Trademark Office
Address: COMMISSIONER FOR PATENTS
P.O. Box 1450
Alexandria, Virginia 22313-1450
www.uspto.gov

HAMRE, SCHUMANN, MUELLER & LARSON, P.C.
P.O. BOX 2902
MINNEAPOLIS, MN 55402-0902

Mail Date: 04/21/2010

Applicant	: Yoshiharu Sato	: DECISION ON REQUEST FOR
Patent Number	: 7594983	: RECALCULATION of PATENT
Issue Date	: 09/29/2009	: TERM ADJUSTMENT IN VIEW
Appliction No	: 10/533,601	: OF WYETH AND NOTICE OF INTENT TO
Filed	: 04/29/2005	: ISSUE CERTIFICATE OF CORRECTION
		:

The Request for Recalculation is **GRANTED** to the extent indicated.

The patent term adjustment has been determined to be **1047** days. The USPTO will *sua sponte* issue a certificate of correction reflecting the amount of PTA days determined by the recalculation.

Prior to the issuance of the certificate of correction, the USPTO will afford patentee an opportunity to be heard and request reconsideration. Accordingly, patentee has **one month or thirty (30) days**, whichever is longer, to file a request for reconsideration of this patent term adjustment calculation. See 35 U.S.C. 154(b)(3)(B)(ii) and 37 CFR 1.322(a)(4). No extensions of time will be granted under 37 CFR 1.136.

Patentee should use document code PET.OP if electronically filing a request for reconsideration of this patent term adjustment calculation. The patentee must also include the information required by 37 CFR 1.705(b)(2) and the fee required by 37 CFR 1.18(e). If patentee does not file a timely request for reconsideration of this patent term adjustment calculation including the information required by 37 CFR 1.705(b)(2) and the fee required by 37 CFR 1.18(e), the USPTO will issue a certificate of correction reflecting the PTA determination noted above.

Patentee should be aware that in order to preserve the right to review in the United States District Court for the District of Columbia of the USPTO patent term adjustment determination, patentee must ensure that he or she also take the steps required under 35 U.S.C. 154(b)(4)(A) in a timely manner. Nothing in the request for recalculation should be construed as providing an alternative time frame for commencing a civil action under 35 U.S.C. 154(b)(4)(A).

Any questions concerning this decision should be directed to the Office of Patent Legal Administration at 571-272-7702.

UNITED STATES PATENT AND TRADEMARK OFFICE

Commissioner for Patents
United States Patent and Trademark Office
P.O. Box 1450
Alexandria, VA 22313-1450
www.uspto.gov

OCT 16 2006

September 2006

SNELL & WILMER LLP
600 ANTON BOULEVARD
SUITE 1400
COSTA MESA CA 92626

In re Application of: MORITA ET AL. Serial No.: 10/533,605 Filed: 29 April 2005 Docket: 92478-2600	: : : : : :	DECISION ON PETITION TO MAKE SPECIAL UNDER 37 C.F.R. § 1.102(d)

This is a decision on the petition filed on August 28, 2006 to make the above-identified application special under the accelerated examination procedure set forth in MPEP § 708.02(VIII) in accordance with 37 C.F.R. § 1.102(d). The petition included a certificate of mailing dated August 23, 2006.

On August 25, 2006, new conditions were established for applications to become eligible for accelerated examination as set forth in "Change to Practice for Petitions in Patent Applications to Make Special and for Accelerated Examination" published in the Federal Register on June 26, 2006 (71 Fed. Reg. 36323). In accordance with Office policy, a transition in practice occurs between the new standards and the old requirements unless the Notice specifically states that it does not. Accordingly, the certificate of mailing is accepted as the date of submission of the petition.

The petition complies with M.P.E.P. § 708.02, Item VIII: Accelerated Examination, in that it is accompanied by (a) the required petition fee of $130.00, (b) a statement that all claims are directed a single invention or an offer to make an oral election without traverse should the Patent and Trademark Office hold that the claims are not directed to a single invention, (c) a statement that a pre-examination search has been made by the inventor, attorney, agent, or professional searchers, etc., the field of search was also provided, (d) one copy of each of the references deemed most closely related to the subject matter encompassed by the claims, and (e) a detailed description of the submitted references and discussions pointing out how the claimed subject matter distinguishes over these references.

For the above stated reasons, the petition is GRANTED.

The application file is being forwarded to the examiner for expedited prosecution.

If the examiner can make this application special without prejudice to any possible interfering applications, and he/she should make a rigid search for such, he/she is authorized to do so for the next action. Should the application be rejected, the application will not be considered special for the subsequent action unless the applicant promptly makes a bona fide effort to place the application in condition for allowance, even if it is necessary to have an interview with the examiner to accomplish this purpose.

If the examiner finds any interfering application for the same subject matter, he/she should consider such application simultaneously with this application and should state in the official letter of such application that he/she is taking it out of its turn because of possible interference.

Should an appeal be taken in this application or should this application becomes involved in an interference, consideration of the appeal and the interference will be expedited by all Patent and Trademark Office officials concerned, contingent likewise upon diligent prosecution by the applicant.

After allowance, this application will be given priority for printing. See M.P.E.P. § 1309.

The petition is granted to the extent indicated.

Any inquiry regarding this decision should be directed to Jose' G. Dees, Special Program Examiner, at (571) 272-1569.

Jose' G. Dees, Special Program Examiner
Technology Center 2800 - Semiconductors,
Electrical & Optical Systems & Components

14 NOV 2006

UNITED STATES PATENT AND TRADEMARK OFFICE

Commissioner for Patents
United States Patent and Trademark Office
P.O. Box 1450
Alexandria, VA 22313-1450
www.uspto.gov

David S. Resnick
Nixon Peabody, LLP
100 Summer Street
Boston, MA 02110-2131

In re Application of
LIEBERMAN et al.
Serial No.: 10/533,622
PCT No.: PCT/US03/34686
Int. Filing Date: 30 October 2003
Priority Date: 30 October 2002
Atty. Docket No.: 033393-055194
For: METHODS FOR TREATING AND PREVENTING APOPTOSIS RELATED DISEASES USING RNA INTERFERING AGENTS

DECISION ON PETITION UNDER 37 CFR 1.181

This decision is issued in response to applicants' "Petition Under 37 CFR 1.181 to Withdraw Holding of Abandonment" filed 16 October 2006. No petition fee is due.

BACKGROUND

On 30 October 2003, applicants filed international application PCT/US03/34686 which claimed a priority date of 30 October 2002. Pursuant to 37 CAR 1.495, the thirty-month period for paying the basic national fee in the United States expired at midnight on 30 April 2005.

On 29 April 2005, applicants filed a transmittal for entry into the national stage in the United States, which accompanied by, inter alia: the requisite basic national fee as required by 35 U.S.C. 371(c)(1); a copy of the international application; and a preliminary amendment.

On 16 September 2005, the United States Designated/Elected Office (DO/EO/US) mailed a Notification of Missing Requirements (Form PCT/DO/EO/905) requiring an oath or declaration in compliance with 37 CFR 1.497(a) and (b). (The notification did not indicate that a Sequence Listing was required under 37 CFR 1.821(c) and (e).)

On 17 January 2006, applicants filed an executed declaration and an assignment.

On 03 April 2006, the United States Designated/Elected Office (DO/EO/US) mailed a "Notification of Acceptance of Application under 35 U.S.C. 371 and 37 CFR 1.494 OR 1.495" (Form PCT/DO/EO/903) which set forth a 35 U.S.C. 371 completion date of 17 January 2006.

On 07 July 2006, the United States Designated/Elected Office (DO/EO/US) mailed Notification to Comply with Requirements for Patent Application Containing Nucleotide and/or Amino Acid Sequence Disclosures (Form PCT/DO/EO/922) indicating that a Sequence Listing had not been filed as required by 37 CFR 1.821(c) and (e). The notification set a two-month time limit in which to respond. Extensions of time were available under 37 CFR 1.136(a).

On 11 September 2006, applicants filed "Response under 37 CFR 1.825(d) and Statement in Support of Filing a Substitute Sequence Listing under 37 CFR 1.821(f) which included a Statement under 37 CFR 1.821(e) with a hard copy and a computer readable form of the sequence listing. (On 19 September 2006, the PALM Database indicated that a compliant computer readable form (CRF) had been submitted.)

On 12 September 2006, the United States Designated/Elected Office (DO/EO/US) mailed NOTIFICATION OF ABANDONMENT (Form PCT/DO/EO/909) indicating that the application was abandoned for failure to file a complete response to the Notification to Comply with Requirements for Patent Application Containing Nucleotide and/or Amino Acid Sequence Disclosures (Form PCT/DO/EO/922) mailed 07 July 2006 within the time period set therein.

On 16 October 2006, applicants filed the present petition to withdraw the holding of abandonment.

DISCUSSION

The above-identified application was abandoned for failure to file a proper response to the Notification to Comply with Requirements for Patent Application Containing Nucleotide and/or Amino Acid Sequence Disclosures (Form PCT/DO/EO/922) mailed 07 July 2006, in that, the sequence listing in computer readable form (CRF) had not been submitted within the period set therein.

Applicants state in their present petition that a response to the Notification to Comply with Requirements for Patent Application Containing Nucleotide and/or Amino Acid Sequence Disclosures (Form PCT/DO/EO/922) was filed on 15 September 2006. A review of the application file reveals that the sequence listing and computer readable form in compliance with 37 CFR 1.821 -1.825 was received in the United States Patent and Trademark Office on 11 September 2006. Further, the USPTO's PALM Database indicated that a compliant computer readable form (CRF) had been entered on 19 September 2006. Therefore, the Notification of Abandonment was mailed in error and is hereby withdrawn.

CONCLUSION

Therefore, the petition to withdraw holding of abandonment is **GRANTED** and the holding of Abandonment is withdrawn.

The application has an international filing date of 30 October 2003 under 35 U.S.C. 363 and a 35 U.S.C. 371(c) date of **17 January 2006**.

This application is being returned to the United States/Elected Office for processing in accordance with this decision.

Anthony Smith
Attorney-Advisor
Office of PCT Legal Administration
Telephone: (571) 272-3298
Facsimile: (571) 273-0459

06 MAR 2006

#5

UNITED STATES PATENT and TRADEMARK OFFICE

COMMISSIONER FOR PATENTS
UNITED STATES PATENT AND TRADEMARK OFFICE
P.O BOX 1450
ALEXANDRIA, VA 22313-1450
www.uspto.gov

MILLEN, WHITE, ZELANO
& BRANIGAN, P.C.
Arlington Courthouse Plaza 1
2200 Clarendon Blvd. Suite 1400
Arlington, Virginia 22201

In re Application of	:	DECISION ON
Peter REYNDERS et al	:	
Application No.: 10/533,641	:	
PCT No.: PCT/EP2003/011508	:	PETITION UNDER
Int. Filing Date: 17 October 2003	:	
Priority Date: 04 November 2002	:	
Attorney Docket No.: MERCK-3007	:	37 CFR 1.182
For: MICROSTUCTURED EFFECT PIGMENTS	:	

This decision is in response to petitioner's "PETITION UNDER 37 CFR 1.182" filed on 29 November 2005. The petition fee of $400.00 has been charged to Deposit Account No. 13-3402.

BACKGROUND

On 17 October 2003, applicants filed international application No. PCT/EP2003/011508, which claims a priority date of 04 November 2002. A copy of the international application was communicated to the USPTO from the International Bureau on 21 May 2004. Accordingly, the deadline for paying the basic national fee in the United States under 35 U.S.C. 371 and 37 CFR 1.495 was 04 May 2005.

On 03 May 2005, applicants filed in the United States Patent and Trademark Office (PTO) a Transmittal Letter (Form PTO-1390) accompanied by, *inter alia*, the basic national fee. Applicant, however, did not satisfy the requirement set forth by 35 U.S.C. 371(c)(4) because the executed declaration was provided with the name Michael Ukelis, which was not in the international application.

On 29 September 2005, the United States Designated/Elected Office (DO/EO/US) mailed a "NOTIFICATION OF MISSING REQUIREMENTS UNDER 35 U.S.C. 371 IN THE UNITED STATES DESIGNATED/ELECTED OFFICE (DO/EO/US)" (Form PCT/DO/EO/905) which informed applicant, inter alia, that an "Oath or Declaration of the inventors, in compliance with 37 CFR 1.497(a) and (b), identifying the application by the International application number and international filing date." The current oath or declaration does not comply with 37 CFR 1.497(a) and (b) in that it: inventor Ukelis' name does not correspond with that listed on the IA. It also stated that items set forth above must be submitted within two months from date of mailing or by 32 months from the priority date, whichever is later. Failure to properly respond will result in abandonment."

On 29 November 2005, petitioner submitted the instant petition, which included an affidavit in support of the name change of the inventor from Michael Schmelz to Michael Ukelis.

DISCUSSION

MPEP § 605.04(c) requires in instances where an inventor has changed his or her name after the application has been filed to submit a petition under 37 CFR 1.182. The petition must include (1) the appropriate petition fee and (2) an affidavit signed with both names setting forth the procedure whereby the change of name was effected, or a certified copy of the court order.

With respect to item (1), the petition fee has been charged to petitioner's deposit account.

With respect to item (2), an affidavit has been provided signed under both names-Michael Schmelz (maiden name), and Michael Ukelis (married named), and setting forth the procedure whereby the change of name was effected. Therefore, item (2) has been satisfied.

For the reasons above, the application may enter into national stage processing at this time.

CONCLUSION

The petition under 37 CFR §1.182 for change of name of inventor is **GRANTED**. This application is being returned to the United States Designated/Elected Office (DO/EO/US) for continued processing under 35 U.S.C. 371. The 35 USC 371(c)(1), (c)(2), and (c)(4) date of this application is **03 May 2005.**

Rafael Bacares
PCT Legal Examiner
PCT Legal Office
Telephone: (571) 272-3276
Facsimile: (571) 273-0459

12 JUL 2006

#3

UNITED STATES PATENT AND TRADEMARK OFFICE

Commissioner for Patents
United States Patent and Trademark Office
P.O. Box 1450
Alexandria, VA 22313-1450
www.uspto.gov

Nixon & Vanderhye
901 North Glebe Road
Arlington, VA 22203

In re Application of	:	
JACOTOT et al.	:	
Application No.: 10/533,642	:	
PCT No.: PCT/EP03/12056	:	
Int. Filing Date: 02 October 2003	:	DECISION ON PETITION
Priority Date: 02 October 2002	:	
Attorney Docket No.: 1721-90	:	
For: METHOD FOR MODULATORS OF MITOCHONDRIAL FUNCTIONING AND NEW MODULATORS OBTAINED		

This decision is issued in response to applicant's "Rule 137(b) Petition for Revival of an International Application for Patent Designating the U.S. Abandoned Unintentionally" filed 03 May 2005, which is being treated as a Petition to Revive under 37 CFR 1.137(b). Applicant has paid the large entity petition fee.

BACKGROUND

On 02 October 2003, applicants filed international application PCT/EP03/12056 which claimed a priority date of 02 October 2002. Pursuant to 37 CFR 1.495, the thirty-month period for paying the basic national fee in the United States expired at midnight on 02 April 2005.

On 03 May 2005, applicants filed a transmittal letter for entry into the national stage in the United States for international application PCT/EP03/12056, which included, among other materials: the requisite basic national fee as required by 35 U.S.C. 371(c)(1); a preliminary amendment; and a petition to revive international application no. PCT/FR03/12056

On 22 August 2005, applicants filed a declaration executing application number PCT/FR03/12056.

DISCUSSION

37 CFR 1.137(b) permits the filing of a petition to revive an abandoned application where the abandonment resulted from an unintentional delay. A grantable petition under this section must include: (1) the required reply, unless previously filed; (2) the petition fee required by law; (3) a statement that the "entire delay in filing the required reply from the

due date for the reply until the filing of a grantable petition pursuant to this paragraph was unintentional;" and (4) any terminal disclaimer and fee required pursuant to 37 CFR 1.137(c). As discussed below, applicant here has failed to satisfy items (1) and (3).

As to Item (1) above, the "required reply" here is: a request for entry into the U.S. national stage for the specified international application; the payment of the basic national fee; and a petition to revive under 37 CFR 1.137. The present petition includes a Form PTO-1390 transmittal letter requesting entry into the U.S. national stage for international application number PCT/EP2003/012056, and it included payment of the basic national fee. However, the petition to revive identified the international application as PCT/FR2003/012056. Because of the inconsistency between the international application numbers, it is not clear whether the present submission is requesting entry into the U.S. national stage for PCT/EP2003/012056 or PCT/FR2003/012056. Applicant must provide a corrected petition that makes clear the application for which national stage entry is desired.

Item (3) has not been satisfied. Petitioner states that "the above-identified application became abandoned as to the United States because the fees and documents were inadvertently not filed prior to the expiration of the time set fourth in 37 CFR 1.495(b)." The caption of the petition to revive lists the international application number as PCT/FR2003/012056. Hence, it appears that petitioner is attempting to revive PCT/FR2003/012056, not PCT/EP2003/012056. Due to the disparity, the request for revival (and the statement of unintentional delay contained therein) cannot be accepted. A corrected petition form is required that makes clear the application that petitioner is seeking to revive and the application to which the statement of unintentional delay is directed.

It is noted that the declaration is identifies the international application as PCT/FR2003/012056.

CONCLUSION

The petition for revival under 37 CFR 1.137(b) is **DISMISSED** without prejudice.

If reconsideration on the merits of this petition is desired, a proper response must be filed within **TWO (2) MONTHS** from the mail date of this decision. Any reconsideration request should be entitled "Renewed Petition Under 37 CFR 1.137(b)" and include the materials required to satisfy items (1) and (3) of a grantable petition discussed above, that is, a corrected transmittal letter and petition form which clearly identify the international application for which revival and national stage entry is desired and the application to which the statement of unintentional delay is directed. Extensions of time may be obtained under 37 CFR 1.136(a).

Any further correspondence with respect to this matter should be addressed to the Mail Stop PCT, Commissioner for Patents, Office of PCT Legal Administration, P.O. Box

1450, Alexandria, Virginia 22313-1450, with the contents of the letter marked to the attention of the Office of PCT Legal Administration.

Anthony Smith
Attorney-Advisor
Office of PCT Legal Administration
Telephone: (571) 272-3298
Facsimile: (571) 273-0459

#5

UNITED STATES PATENT AND TRADEMARK OFFICE

Commissioner for Patents
United States Patent and Trademark Office
P.O. Box 1450
Alexandria, VA 22313-1450
www.uspto.gov

24 AUG 2006

Nixon & Vanderhye
901 North Glebe Road
Arlington, VA 22203

In re Application of JACOTOT et al. Application No.: 10/533,642 PCT No.: PCT/EP03/12056 Int. Filing Date: 02 October 2003 Priority Date: 02 October 2002 Attorney Docket No.: 1721-90 For: METHOD FOR SCREENING MODULATORS OF MITOCHONDRIAL FUNCTIONING AND NEW MODULATORS OBTAINED	:	DECISION ON PETITION UNDER 37 CFR 1.137(b)

The renewed petition to revive under 37 CFR 1.137(b) filed 17 July 2006 in the above-captioned application is hereby **GRANTED** as follows:

Applicant's statement that "the entire delay in filing the required reply from the due date for the reply until the filing of a grantable petition under 37 CFR 1.137(b) was unintentional" meets the requirements of 37 CFR 1.137(b)(3).

A review of the application file reveals that applicant has submitted the required reply and the requirements of 37 CFR 1.137(b) have been satisfied. Therefore, the request to revive the application abandoned under 35 U.S.C. 371(d) is granted as to the National stage in the United States of America.

This application is being forwarded to the United States Designated/Elected Office (US/DO/EO) for continued processing in accordance with this decision.

Anthony Smith

Anthony Smith
Attorney-Advisor
Office of PCT Legal Administration
Telephone: (571) 272-3298
Facsimile: (571) 273-0459

0 8 NOV 2007

UNITED STATES PATENT AND TRADEMARK OFFICE

Commissioner for Patents
United States Patent and Trademark Office
P.O. Box 1450
Alexandria, VA 22313-1450
www.uspto.gov

Nixon & Vanderhye
901 North Glebe Road
Arlington, VA 22203

In re Application of
JACOTOT et al.
Application No.: 10/533,642
PCT No.: PCT/EP03/12056
Int. Filing Date: 02 October 2003
Priority Date: 02 October 2002
Attorney Docket No.: 1721-90
For: METHOD FOR MODULATORS OF MITOCHONDRIAL FUNCTIONING AND NEW MODULATORS OBTAINED

DECISION ON PETITION

This decision is issued in response to applicants' "Petition under 37 CFR 1.47" filed 05 October 2007 to accept the application without the signature of joint-inventor, Dominique Rebouillat.

BACKGROUND

On 02 October 2003, applicants filed international application PCT/EP03/12056 which claimed a priority date of 02 October 2002. Pursuant to 37 CFR 1.495, the thirty-month period for paying the basic national fee in the United States expired at midnight on 02 April 2005.

On 03 May 2005, applicants filed a transmittal letter for entry into the national stage in the United States for international application PCT/EP03/12056, which included, among other materials: the requisite basic national fee as required by 35 U.S.C. 371(c)(1); a preliminary amendment; and a petition to revive international application. The international application was revived pursuant to 37 CFR 1.137(b) in a "Decision on Petition" dated dated 24 August 2006.

On 06 March 2007, the United Stated Designated/Elected Office mailed a Notification of Missing Requirements under 35 U.S.C. 371 (Form PCT/DO/EO/905) indicating that an oath or declaration in compliance with 37 CFR 1.497(a) and (b) must be filed. Furthermore, the Notification indicated that a Sequence Listing had not been filed as required by 37 CFR 1.821(c) and (e). The notification set a two-month time limit in which to respond. The notification set a two-month time limit in which to respond.

On 05 October 2007, applicants filed the present petition under 37 CFR 1.47(a).

DISCUSSION

A petition under 37 CFR 1.47(a) must be accompanied by: (1) the fee under 37 CFR 1.17, (2) factual proof that the missing joint inventor refuses to execute the application or cannot be reached after diligent effort, (3) a statement of the last known address of the missing inventor, and (4) an oath or declaration by each 37 CFR 1.47(a) applicant on his or her own behalf and behalf of the nonsigning joint inventor. Items (1), (2) and (4) have been satisfied.

Regarding item (2) above, petitioner states that Dominique Rebouillat has refused to sign the application. Section 409.03(d) of the Manual of Patent Examining Procedure (M.P.E.P.), **Proof of Unavailability or Refusal**, states, in part:

> Where a refusal of the inventor to sign the application papers is alleged, the circumstances of the presentation of the application papers and of the refusal must be specified in a statement of facts by the person who presented the inventor with the application papers and/or to whom the refusal was made. Statements by a party not present when an oral refusal is made will not be accepted.
>
> Proof that a bona fide attempt was made to present a copy of the application papers (specification, including claims, drawings, and oath or declaration) to the nonsigning inventor for signature, but the inventor refused to accept delivery of the papers or expressly stated that the application papers should not be sent, may be sufficient. When there is an express oral refusal, that fact along with the time and place of the refusal must be stated in the statement of facts. When there is an express written refusal, a copy of the document evidencing that refusal must be made part of the statement of facts. The document may be redacted to remove material not related to the inventor's reasons for refusal.
>
> When it is concluded by the 37 CFR 1.47 applicant that a nonsigning inventor's conduct constitutes a refusal, all facts upon which that conclusion is based should be stated in the statement of facts in support of the petition or directly in the petition. If there is documentary evidence to support facts alleged in the petition or in any statement of facts, such evidence should be submitted. Whenever a nonsigning inventor gives a reason for refusing to sign the application oath or declaration, that reason should be stated in the petition.

A review of the present petition reveals that petitioner has not shown that a bona fide attempt was made to present the application papers (specification, claims, and drawings) to Dominique Rebouillat. The declaration of Chantal Peaucelle states that communications (exhibits 1 and exhibit 4) were mailed to the nonsigning inventor on 26 March 2007 and 27 April 2007 and that Dominique Rebouillat refused to execute the documents. However, it is unclear from the present petition and accompanying documents whether Dominique Rebouillat has been presented with a complete copy of the application

papers as required. The mailing of the oath/declaration is not considered a complete copy of the application. As stated above, where a refusal of the inventor to sign the application papers is alleged, a statement of facts is needed from a person having first hand knowledge of the facts that a complete copy of the application papers (specification, claims, and drawings) were sent to Mr. Rebouillat, and when such papers were sent. In addition, copies of documentary evidence such as a certified mail return receipt, cover letter of instruction, telegrams, etc., should be supplied with the declaration. Lastly, applicants should provide complete translations of Exhibits 1-4.

For the reasons stated above, it would not be appropriate to accept the application without the signature of Dominique Rebouillat under 37 CFR 1.47(a) at this time.

CONCLUSION

The petition under 37 CFR 1.47(a) is **DISMISSED** without prejudice.

If reconsideration on the merits of this petition is desired, a proper response must be filed within **TWO (2) MONTHS** from the mail date of this decision. Any reconsideration request should include a cover letter entitled "Renewed Petition Under 37 CFR 1.47(a)." No additional petition fee is required.

Any further correspondence with respect to this matter should be addressed to: Mail Stop PCT, Commissioner for Patents, Office of PCT Legal Administration, P.O. Box 1450, Alexandria, Virginia 22313-1450, with the contents of the letter marked to the attention of the Office of PCT Legal Administration.

Anthony Smith
Attorney-Advisor
Office of PCT Legal Administration
Tel.: (571) 272-3298
Fax: (571) 273-0459

UNITED STATES PATENT AND TRADEMARK OFFICE

Commissioner for Patents
United States Patent and Trademark Office
P.O. Box 1450
Alexandria, VA 22313-1450
www.uspto.gov

0 4 FEB 2008

Nixon & Vanderhye
901 North Glebe Road, 11th Floor
Arlington, VA 22203

In re Application of	:	
JACOTOT et al.	:	
Application No.: 10/533,642	:	
PCT No.: PCT/EP03/12056	:	
Int. Filing Date: 02 October 2003	:	DECISION ON PETITION
Priority Date: 02 October 2002	:	
Attorney Docket No.: 1721-90	:	
For: METHOD FOR SCREENING MODULATORS OF MITOCHONDRIAL FUNCTIONING AND NEW MODULATORS OBTAINED	:	

This decision is issued in response to applicants' "Renewed Petition under 37 CFR 1.47" filed 08 January 2008 to accept the application without the signature of joint-inventor, Dominique Rebouillat.

BACKGROUND

On 02 October 2003, applicants filed international application PCT/EP03/12056 which claimed a priority date of 02 October 2002. Pursuant to 37 CFR 1.495, the thirty-month period for paying the basic national fee in the United States expired at midnight on 02 April 2005.

On 03 May 2005, applicants filed a transmittal letter for entry into the national stage in the United States for international application PCT/EP03/12056, which included, among other materials: the requisite basic national fee as required by 35 U.S.C. 371(c)(1); a preliminary amendment; and a petition to revive the international application. The international application was revived pursuant to 37 CFR 1.137(b) in a "Decision on Petition" dated 24 August 2006.

On 06 March 2007, the United Stated Designated/Elected Office mailed a Notification of Missing Requirements under 35 U.S.C. 371 (Form PCT/DO/EO/905) indicating that an oath or declaration in compliance with 37 CFR 1.497(a) and (b) must be filed. Furthermore, the Notification indicated that a Sequence Listing had not been filed as required by 37 CFR 1.821(c) and (e). The notification set a two-month time limit in which to respond. The notification set a two-month time limit in which to respond.

On 05 October 2007, applicants filed a petition under 37 CFR 1.47(a). In a decision mailed 08 November 2007, applicants' petition was dismissed without prejudice.

On 08 January 2008, applicants filed the present renewed petition under 37 CFR 1.47(a).

DISCUSSION

A petition under 37 CFR 1.47(a) must be accompanied by (1) the fee under 37 CFR 1.17(h), (2) factual proof that the missing joint inventor refuses to execute the application or cannot be reached after diligent effort, (3) a statement of the last known address of the missing inventor, and (4) an oath or declaration by each 37 CFR 1.47(a) applicant on his or her own behalf and behalf of the non-signing joint inventor.

Applicants here have submitted the appropriate petition fee. Item (1) is therefore satisfied.

Regarding item (2), the petition asserts that the nonsigning inventor has refused to execute the declaration. Before a refusal to execute the application can be claimed, section 409.03(d) of the MPEP requires that the nonsigning inventor be provided with a copy of the complete application, including specification, drawings and claims. The MPEP also requires "a statement of facts by the person who presented the inventor with the application papers and/or to whom the refusal was made."

Here, the evidence submitted to demonstrate Dominique Rebouillat's refusal to execute the application papers is contained in the Second Declaration of Chantal Peaucelle included in the petition, and the exhibits thereto. These materials provide the required firsthand statement regarding the delivery to the nonsigning inventor of a copy of the complete application, and the nonsigning inventor's refusal to execute the application, with documentary evidence supporting the statement. Item (2) is therefore satisfied.

Regarding item (3), applicants have provided the last known address of the nonsigning inventor. Accordingly, item (3) is therefore satisfied.

Regarding item (4), section 409.03(a) of the Manual of Patent Examining Procedure ("MPEP") states that:

> An oath or declaration signed by all the available joint inventors with the signature block of the nonsigning inventor(s) left blank may be treated as having been signed by all the available joint inventors on behalf of the nonsigning inventor(s), unless otherwise indicated.

Here, applicants have filed declarations executed by two of the three inventors and including an unsigned signature box identifying the nonsigning inventor (Dominique Rebouillat). This declaration is treated as having been executed by the available inventors on their behalf and on behalf of the nonsigning inventor. Item (4) is therefore satisfied.

For the reasons stated above, it is appropriate to accept the application without the signature of Dominique Rebouillat under 37 CFR 1.47(a) at this time.

CONCLUSION

The petition under 37 CFR 1.47(a) is **GRANTED**.

As provided in 37 CFR 1.47(c), a notice of the filing of this application will be forwarded to the nonsigning inventor at his last known address of record.

A notice of the filing of the application under 37 CFR 1.47(a) will be published in the Official Gazette.

This application is being returned to the United States Designated/Elected Office for processing in accordance with this decision.

Anthony Smith
Attorney-Advisor
Office PCT Legal Administration
Tel.: 571-272-3298
Facsimile: 571-273-0459

#5

25 MAY 2006

UNITED STATES PATENT AND TRADEMARK OFFICE

Commissioner for Patents
United States Patent and Trademark Office
P.O. Box 1450
Alexandria, VA 22313-1450
www.uspto.gov

NIXON & VANDERHYE, PC
901 NORTH GLEBE ROAD, 11TH FLOOR
ARLINGTON VA 22203

In re Application of
WALLENTIN
Serial No.: 10/533,643
PCT No.: PCT/SE03/01708
Int. Filing Date: 05 November 2003
Priority Date: 05 November 2002
Attorney's Docket No.: 2380-888
For: COLLECTIVE NOTIFICATION OF NODE RESET TO SUBSET OF CONNECTIONS IN RADIO ACCESS NETWORK

DECISION ON PETITION

UNDER 37 CFR 1.182

This decision is in response to applicant's submission filed 15 May 2006 in the United States Patent and Trademark Office (USPTO) in the above-captioned application and treated as a petition under 37 CFR 1.182. Applicant requests acceptance of a copy of the papers filed on 15 May 2006 in U.S. national stage application for international application PCT/SE03/01708 in lieu of the original application papers filed in the USPTO on 21 October 2005. Since the papers misidentified the application number as 10/553,643 rather than 10/533,643, the submission is being treated as a petition under 37 CFR 1.182. The petition fee of $400 is required and charged to applicant's deposit account per his authorization.

On 03 May 2005, applicant filed the U.S. national stage application for international application PCT/SE02/01708. These papers were assigned U.S. serial number 10/533,643.

On 04 October 2005, a Notification of Missing Requirements, identifying 10/533,643, was mailed to applicant indicating that an oath or declaration, in compliance with 37 CFR 1.497(a) and (b) was required. On 21 October 2005, applicant apparently filed a response. However, these papers identified U.S. serial number 10/553,643.

On 16 March 2006, applicants filed a Status Inquiry (referencing 10/553,643), indicating that applicant had filed a response to the Notification of Missing Requirements on 21 October 2005.

On 15 May 2006, applicant filed the instant petition, requesting acceptance of a copy of the national stage application papers filed 21 October 2005, accompanied by a copy of the itemized postcard receipt with USPTO date-stamp 21 October 2005, indicating receipt of, *inter alia*, information, disclosure statement, assignment and declaration of the inventor.

DISCUSSION

A review of the USPTO date-stamped, itemized postcard receipt indicates that declaration(1 page) and assignment (3 pages) were deposited, along with other documents (a copy of the 04 October 2005 Notice of Missing Requirements, IDS, IPER and Transmittal Letter), with the USPTO on 21 October 2005.

The evidence submitted is sufficient to establish that this application was received in the USPTO on 21 October 2005. Accordingly, it is appropriate to accept the copy of the declaration

as a replacement for the missing original declaration with a deposit date of 21 October 2005.

A review of the declaration reveals that the declaration identifies each inventor, and states the residency, citizenship and mailing address of each inventor. Thus, the declaration is acceptable and the requirements of 37 CFR 1.497 are met.

CONCLUSION

The petition under 37 CFR 1.182 to correct the U.S. serial number to 10/533,643 and accept the papers filed on 21 October 2005 in application 10/533,643 is **GRANTED**.

The copy of the declaration originally submitted on 21 October 2005and resubmitted on 15 May 2006 is acceptable and meets the requirements of 37 CFR 1.497.

Applicant is reminded that all papers filed in the national stage application of PCT/SE03/01708 should reference U.S. application **10/533,643**.

The application will be forwarded to the United States Designated/Elected Office (DO/EO/US) for further processing. The 35 U.S.C. 371 date is **21 October 2005.**

Cynthia M. Kratz

Cynthia M. Kratz
Attorney Advisor
Office of PCT Legal Administration

Telephone: (571) 272-3286

BEST AVAILABLE COPY

UNITED STATES PATENT AND TRADEMARK OFFICE

UNITED STATES DEPARTMENT OF COMMERCE
United States Patent and Trademark Office
Address: COMMISSIONER FOR PATENTS
P.O. Box 1450
Alexandria, Virginia 22313-1450
www.uspto.gov

YOUNG & THOMPSON
209 Madison Street
Suite 500
Alexandria, VA 22314

Mail Date: 04/20/2010

Applicant	: Iiro Hietanen	: DECISION ON REQUEST FOR
Patent Number	: 7605921	: RECALCULATION of PATENT
Issue Date	: 10/20/2009	: TERM ADJUSTMENT IN VIEW
Appliction No	: 10/533,645	: OF WYETH AND NOTICE OF INTENT TO
Filed	: 01/13/2006	: ISSUE CERTIFICATE OF CORRECTION
		:

The Request for Recalculation is **GRANTED** to the extent indicated.

The patent term adjustment has been determined to be **397** days. The USPTO will *sua sponte* issue a certificate of correction reflecting the amount of PTA days determined by the recalculation.

Prior to the issuance of the certificate of correction, the USPTO will afford patentee an opportunity to be heard and request reconsideration. Accordingly, patentee has **one month or thirty (30) days**, whichever is longer, to file a request for reconsideration of this patent term adjustment calculation. See 35 U.S.C. 154(b)(3)(B)(ii) and 37 CFR 1.322(a)(4). No extensions of time will be granted under 37 CFR 1.136.

Patentee should use document code PET.OP if electronically filing a request for reconsideration of this patent term adjustment calculation. The patentee must also include the information required by 37 CFR 1.705(b)(2) and the fee required by 37 CFR 1.18(e). If patentee does not file a timely request for reconsideration of this patent term adjustment calculation including the information required by 37 CFR 1.705(b)(2) and the fee required by 37 CFR 1.18(e), the USPTO will issue a certificate of correction reflecting the PTA determination noted above.

Patentee should be aware that in order to preserve the right to review in the United States District Court for the District of Columbia of the USPTO patent term adjustment determination, patentee must ensure that he or she also take the steps required under 35 U.S.C. 154(b)(4)(A) in a timely manner. Nothing in the request for recalculation should be construed as providing an alternative time frame for commencing a civil action under 35 U.S.C. 154(b)(4)(A).

Any questions concerning this decision should be directed to the Office of Patent Legal Administration at 571-272-7702.

UNITED STATES PATENT AND TRADEMARK OFFICE

Commissioner for Patents
United States Patent and Trademark Office
P.O. Box 1450
Alexandria, VA 22313-1450
www.uspto.gov

11 JUL 2006

BIO INTELLECTUAL PROPERTY SERVICES (BIO IPS) LLC
8509 KERNON CT.
LORTON VA 22079

In re Application of	:	
IYER, Eswaran Krishnan et al.	:	
Application No.: 10/533,670	:	
PCT No.: PCT/IB03/02949	:	
Int. Filing Date: 24 July 2003	:	DECISION
Priority Date: none	:	
Docket No.: WH-3	:	
For: ORAL COMPOSITIONS FOR	:	
TREATMENT OF DISEASES	:	

This decision is in response to "Request for Corrected Filing Receipt," filed in the above-captioned application on 28 April 2006.

BACKGROUND

On 24 July 2003, applicants filed international application PCT/IB03/02949. A copy of the international application was transmitted to the Office by the International Bureau on 03 February 2005. The deadline for entry into the national phase in the United States was 24 January 2006.

On 03 May 2005, applicants submitted a transmittal letter for entry into that national phase in the United States accompanied by the basic national fee.

On 30 December 2005, applicants submitted a declaration of the inventors.

On 02 March 2006, the Office mailed Notification of Missing Requirements (Form PCT/DO/EO/905) indicating that an oath or declaration in compliance with 37 CFR 1.497(a)-(b) was required.

On 14 March 2006, the Office mailed Notification of Acceptance (Form PCT/DO/EO/903) indicating that the requirements under 35 U.S.C. 371(c)(1), (c)(2) and (c)(4) were satisfied on 30 December 2005.

On 28 April 2006, applicants submitted a request for a corrected filing receipt and a statement that the name of an inventor included a typographical error.

DISCUSSION

Applicants indicate that the correct name of the third inventor is "Rasendrakumar Jayantilal Jha," and that the discrepancy is the result of a typographical error. Applicants' statement is sufficient. However, a review of the declaration filed on 30 December 2005 reveals it does not comply with 37 CFR 1.497(a)-(b). The declaration submitted 28 April 2006 is not necessary to correct the typographical error and is not sufficient to correct the 30 December 2005 declaration deficiencies, as it is executed by only one inventor.

The declaration submitted on 30 December 2005 included one "page 1 of 2," two "page 2 of 2," and one "page 3 of 3." The two pages 2 list the same inventors, but were separately executed. This indicates that at least two copies of the declaration were executed and that they have been pieced together to form a single composite declaration. While it is acceptable for inventors to execute separate copies of the declaration, the complete copy as executed by the inventor must be submitted. As such, the declaration fails to comply with 37 CFR 1.497(a)-(b).

CONCLUSION

For the reasons discussed above, applicants request to correct the typographical error is **GRANTED**, but applicants' request for a corrected filing receipt is **REFUSED**.

The Notification of Acceptance (Form PCT/DO/EO/903) mailed 28 April 2006 is **VACATED**.

The Notification of Missing Requirements (Form PCT/DO/EO/905) mailed 14 March 2006 is **VACATED**.

Applicants are required to submit an oath or declaration in compliance with 37 CFR 1.497(a)-(b) with TWO (2) MONTHS from the mail date of this decision. Extensions of time are available under 37 CFR 1.136(a). Failure to timely reply will result in the abandonment of the application.

Any further correspondence with respect to this matter should be addressed to the Mail Stop PCT, Commissioner for Patents, Office of PCT Legal Administration, P.O. Box 1450, Alexandria, Virginia 22313-1450, with the contents of the letter marked to the attention of the Office of PCT Legal Administration.

Erin P. Thomson

Erin P. Thomson
Attorney Advisor
PCT Legal Administration

Telephone: 571-272-3292
Facsimile: 571-273-0459

30 SEP 2005

#3

UNITED STATES PATENT and TRADEMARK OFFICE

COMMISSIONER FOR PATENTS
UNITED STATES PATENT AND TRADEMARK OFFICE
P.O BOX 1450
ALEXANDRIA, VA 22313-1450
www.uspto.gov

Ricahrd H. Anderson
MARSHALL, GERSTEIN & BORUN LLP
233 S. Wacker Drive, Suite 6300
Sears Tower, Chicago, Illinois 60606-6357

In re Application of	: DECISION ON
Masaaki Miyanaga	:
Application No.: 10/533,671	:
PCT No.: PCT/JP03/13981	:
Int. Filing Date: 31 October 2003	: PETITION UNDER
Priority Date: 01 November 2002	:
Attorney's Docket No.: 19036/40259	:
For: DRILL BIT	: 37 CFR 1.137(b)

This decision is in response to applicant's "Petition For Revival Of An Application For Patent Abandoned Unintentionally Under 37 CFR 1.137(b)," filed on 03 May 2005.

BACKGROUND

On 31 October 2003, this international application was filed, claiming an earliest priority date of 01 November 2002.

The deadline for paying the basic national fee in the United States under 35 U.S.C. 371 and 37 CFR 1.495 was 01 May 2005. This international application became abandoned with respect to the United States at midnight on 01 May 2005 for failure to pay the required basic national fee.

On 03 May 2005, applicant filed the instant petition under 37 CFR 1.137(b) and Transmittal letter for entry into the national stage in the United States, which was accompanied by the basic national fee and the petition fee.

DISCUSSION

A grantable petition to revive an abandoned application under 37 CFR 1.137(b) must be accompanied by (1) the required reply, unless previously filed. In a nonprovisional application abandoned for failure to prosecute, the required reply may be met by the filing of a continuing application; (2) the petition fee as set forth in § 1.17(m); and (3) a statement that the entire delay in filing the required reply from the due date for the reply until the filing of a grantable petition pursuant to this paragraph was unintentional. The Commissioner may require additional information where there is a question whether the delay was unintentional; and (4) any terminal disclaimer (and fee as set forth in § 1.20 (d)) required pursuant to paragraph (c) of this section.

Petitioner has provided: (1) the proper reply by submitting the basic national filing fee, (2) the petition fee set forth in §1.17(m) and (3) the proper statement under 137(b)(3). In this application, no terminal disclaimer is required.

Accordingly, the petition is deemed to satisfy requirements (1), (2), (3), and (4) under 37 CFR 1.137(b).

DECISION

The petition under 37 CFR 1.137(b) is **GRANTED**.

This application is being returned to the United States Designated/Elected Office (DO/EO/US) for continued processing.

Rafael Bacares
PCT Legal Examiner
PCT Legal Office
Telephone: (571) 272-3276
Facsimile: (571) 273-0459

15 MAR 2006

#6

UNITED STATES PATENT AND TRADEMARK OFFICE

Commissioner for Patents
United States Patent and Trademark Office
P.O. Box 1450
Alexandria, VA 22313-1450
www.uspto.gov

Thomas Tarolli
Tarolli, Sundheim, Covell, & Tummino, LLP
526 Superior Avenue
Suite 1111
Cleveland, OH 44114

In re Application of	:	
WANY et al.	:	
U.S. Application No.: 10/533,682	:	DECISION ON PETITION
PCT No.: PCT/CH03/00704	:	UNDER 37 CFR 1.47(a)
Int. Filing Date: 28 October 2003	:	
Priority Date: 29 October 2002	:	
Attorney Docket No.: HU-7638	:	
For: OPTOELECTRONIC SENSOR	:	

This decision is in response to applicants' "Petition under 37 CFR 1.47(a) to File Application with Inventor who Refuses to Sign" filed 07 December 2005 to accept the application without the signature of joint-inventor, Martin Wany.

BACKGROUND

On 28 October 2003, applicants filed international application PCT/CH03/00704 which claimed a priority date of 29 October 2002. A copy of the international application was communicated to the United States Patent and Trademark Office from the International Bureau on 13 May 2004. Pursuant to 37 CFR 1.495, the thirty-month period for paying the basic national fee in the United States expired at midnight on 29 April 2005.

On 27 April 2005, applicants filed a transmittal letter for entry into the national stage in the United States, which accompanied by, inter alia: the requisite basic national fee as required by 35 U.S.C. 371(c)(1); a preliminary amendment; and an information disclosure statement.

On 19 September 2005, the United Stated Designated/Elected Office mailed a Notification of Missing Requirements under 35 U.S.C. 371 (Form PCT/DO/EO/905) indicating that an oath or declaration in compliance with 37 CFR 1.497(a) and (b) must be filed. The notification set a two-month time limit in which to respond.

On 07 December 2005, applicants filed the present petition under 37 CFR 1.47(a).

DISCUSSION

A petition under 37 CFR 1.47(a) must be accompanied by: (1) the fee under 37 CFR 1.17, (2) factual proof that the missing joint inventor refuses to execute the application or cannot be reached after diligent effort, (3) a statement of the last known address of the missing inventor, and (4) an oath or declaration by each 37 CFR 1.47(a) applicant on his or her own behalf and behalf of the nonsigning joint inventor. Items (1) - (4) have been satisfied.

A review of the present petition reveals that applicant has satisfied item (2), in that the applicants have shown that a bona fide attempt was made to present the application papers, including the specification, claims, and drawings to Martin Wany. The steps taken are sufficient to show that the nonsigning inventor refuses to execute the application. Accordingly, it is appropriate to accord the national stage application status under 37 CFR 1.47(a).

CONCLUSION

The etition under 37 CFR 1.47(a) is **GRANTED**.

The application will be given an international filing date of 28 October 2003 under 35 U.S.C. 363, and a date of **07 December 2005** under 35 U.S.C. 371(c).

As provided in 37 CFR 1.47(a), a notice of the filing of this application will be forwarded to the nonsigning inventor at his last known address of record. A notice of the filing of the application under 37 CFR 1.47(a) will be published in the Official Gazette.

This application is being returned to the United States Designated/Elected Office for processing in accordance with this decision.

Anthony Smith
Attorney-Advisor
Office of PCT Legal Administration
Tel: (571) 272-3298
Fax: (571) 273-0459

15 MAR 2006

UNITED STATES PATENT AND TRADEMARK OFFICE

Commissioner for Patents
United States Patent and Trademark Office
P.O. Box 1450
Alexandria, VA 22313-1450
www.uspto.gov

Martin Wany
Trv. Dos Piornais
Edf. Famoso Bloco F
Appt CT
9000-246 Funchal
Portugal

In re Application of
WANY et al.
U.S. Application No.: 10/533,682
PCT No.: PCT/CH03/00704
Int. Filing Date: 28 October 2003
Priority Date: 29 October 2002
Attorney Docket No.: HU-7638
For: OPTOELECTRONIC SENSOR

Dear Mr. Wany:

You are named as an inventor in the above identified United States patent application, filed under the provisions of 37 CFR 1.47(a) and 35 U.S.C. 116. Should a patent be granted, you will be designated as an inventor.

As a named inventor, you are entitled to inspect any paper in the file wrapper of the application, order copies of all or any part thereof (at a prepaid cost per 37 CFR 1.19) or to make your position of record in the application. Alternatively, you may arrange to do any of the preceding through a registered patent agent or attorney presenting written authorization from you. If you care to join in the application, counsel of record (see below) would presumably assist you. Joining in the application would entail the filing of an appropriate oath or declaration by you pursuant to 37 CFR 1.63.

Anthony Smith

Anthony Smith
Attorney-Advisor
Office of PCT Legal Administration
Telephone: (571) 272-3298
Facsimile: (571) 273-0459

Counsel of Record:
Tarolli, Sundheim, Covell, & Tummino, LLP
526 Superior Avenue
Suite 1111
Cleveland, OH 44114

31 MAY 2005

UNITED STATES PATENT AND TRADEMARK OFFICE

COMMISSIONER FOR PATENTS
UNITED STATES PATENT AND TRADEMARK OFFICE
P.O. BOX 1450
ALEXANDRIA, VA 22313-1450
www.uspto.gov

NIXON & VANDERHYE
1100 North Glebe Road, 8th Floor
Arlington, VA 22201-4714

In re Application of:	:	
LUNDSTRUM, Anders, et al.	:	DECISION
U.S. Application No.: 10/533,685	:	
Int'l Application No.: PCT/SE01/01366	:	
Int'l Filing Date: 15 June 2001	:	
Priority Date: 19 June 2000	:	
Attorney's Docket No.: None	:	
For: A METHOD AND AN APPARATUS FOR REDUCING SIGNALLING TRAFFIC IN A TELE-COMMUNICATIONS SYSTEM	:	

This decision is issued in response to applicants' alternative petition for revival under 37 CFR 1.137(b) filed on 16 June 2004 in U.S. Application No. 10/315,251 as part of applicants' "Request/Petition Concerning National Stage Status And Priority Claim." Deposit Account No. 14-1140 will be charged the required petition fee.

BACKGROUND

The background of this application is set forth in the concurrently mailed decision in U.S. Application No. 10/315,251. In that decision, applicants' petition to have U.S. Application No. 10/315,251 treated as the national stage of PCT/SE01/01366 was dismissed. Applicants' submission included the alternative request that the petition be treated as a petition for revival of the international application and creation of a national stage application file. This alternative petition is treated herein.

DISCUSSION

37 CFR 1.137(b) permits the filing of a petition to revive an abandoned application where the abandonment resulted from an unintentional delay. A grantable petition under this section must include: (1) the required reply, unless previously filed; (2) the petition fee required by law; (3) a statement that the "entire delay in filing the required reply from the due date for the reply until the filing of a grantable petition pursuant to this paragraph was unintentional;" and (4) any terminal disclaimer and fee required pursuant to 37 CFR 1.137(c).

Regarding item (1), the "required reply," section 711.03(c) of the Manual of Patent Examining Procedures states that:

> [g]enerally, the required reply is the reply sufficient to have avoided abandonment, had such reply been timely filed.

Here, the International Bureau had previously communicated a copy of the international application to the USPTO. The "required reply" was therefore payment of the basic national fee. The present petition includes the authorization to charge Deposit Account No. 14-1140 for required fees. Based on this authorization, Deposit Account No. 14-1140 will be charged the required basic national fee. Accordingly, applicants have submitted the "required reply." Item (1) is satisfied.

Item (2) is the petition fee required under 37 CFR 1.17. Based on applicants' authorization, Deposit Account No. 14-1140 will be charged the required petition fee. Item (2) is satisfied.

As for item (3), the petition states the following:

> The entire delay from the filing the [sic] required reply (e.g., the filing date of the national stage application, which Applicants do believe to have been timely filed) until the filing of a grantable petition was unintentional. The undersigned and applicants have believed and continue to believe that the national stage application was timely filed, as reflected by consistent efforts for correction, and (while perhaps mistaken as to the cause of the confusion) have not engaged in any intentional delay.

This statement is construed as being the statement required by 37 CFR 1.137(b)(3), that is, a statement that the "entire delay in filing the required reply from the due date for the reply until the filing of a grantable petition pursuant to this paragraph was unintentional." Applicants **must** notify this Office if this is **not** a correct interpretation of this statement. Based on this interpretation of the statement contained in the petition, item (3) is satisfied.

Under the terms of 37 CFR 1.137(c), the terminal disclaimer listed as item (4) above is not required for this application. Applicants have therefore satisfied all the requirements for a grantable petition under 37 CFR 1.137(b).

CONCLUSION

Applicants' petition for revival is **GRANTED**.

The present application has been created as the national stage under 35 U.S.C. 371 of international application PCT/SE01/01366.

Deposit Account No. 14-1140 has been charged the required petition fee and basic national fee.

It is noted that the materials filed in ongoing U.S. Application No. 10/315,251 (i.e., the Preliminary Amendment, the declaration, etc.) are **not** treated as having been filed in the present application. If applicants want such materials considered herein, they must be filed again in the present application.

This application is being forwarded to the National Stage Processing Branch of the Office of PCT Operations for further processing in accord with this decision, including mailing of a "Notification Of Missing Requirements" (Form PCT/DO/EO/905) requiring submission of an oath or declaration in compliance with 37 CFR 1.497 and the surcharge for filing the oath or declaration later than thirty months after the priority date.

Richard M. Ross
Attorney Advisor
Office Of PCT Legal Administration
Telephone: (571) 272-3296
Facsimile: (571) 273-0459

UNITED STATES PATENT AND TRADEMARK OFFICE

UNITED STATES DEPARTMENT OF COMMERCE
United States Patent and Trademark Office
Address: COMMISSIONER FOR PATENTS
P.O. Box 1450
Alexandria, Virginia 22313-1450
www.uspto.gov

THE FARRELL LAW FIRM, LLP
290 Broadhollow Road
Suite 210E
Melville, NY 11747

Mail Date: 04/21/2010

Applicant	: Sung-Ho Choi	: DECISION ON REQUEST FOR
Patent Number	: 7664503	: RECALCULATION of PATENT
Issue Date	: 02/16/2010	: TERM ADJUSTMENT IN VIEW
Appliction No	: 10/533,690	: OF WYETH AND NOTICE OF INTENT TO
Filed	: 12/01/2005	: ISSUE CERTIFICATE OF CORRECTION
		:

The Request for Recalculation is **GRANTED** to the extent indicated.

The patent term adjustment has been determined to be **1110** days. The USPTO will *sua sponte* issue a certificate of correction reflecting the amount of PTA days determined by the recalculation.

Prior to the issuance of the certificate of correction, the USPTO will afford patentee an opportunity to be heard and request reconsideration. Accordingly, patentee has **one month or thirty (30) days**, whichever is longer, to file a request for reconsideration of this patent term adjustment calculation. See 35 U.S.C. 154(b)(3)(B)(ii) and 37 CFR 1.322(a)(4). No extensions of time will be granted under 37 CFR 1.136.

Patentee should use document code PET.OP if electronically filing a request for reconsideration of this patent term adjustment calculation. The patentee must also include the information required by 37 CFR 1.705(b)(2) and the fee required by 37 CFR 1.18(e). If patentee does not file a timely request for reconsideration of this patent term adjustment calculation including the information required by 37 CFR 1.705(b)(2) and the fee required by 37 CFR 1.18(e), the USPTO will issue a certificate of correction reflecting the PTA determination noted above.

Patentee should be aware that in order to preserve the right to review in the United States District Court for the District of Columbia of the USPTO patent term adjustment determination, patentee must ensure that he or she also take the steps required under 35 U.S.C. 154(b)(4)(A) in a timely manner. Nothing in the request for recalculation should be construed as providing an alternative time frame for commencing a civil action under 35 U.S.C. 154(b)(4)(A).

Any questions concerning this decision should be directed to the Office of Patent Legal Administration at 571-272-7702.

24 OCT 2005

UNITED STATES PATENT AND TRADEMARK OFFICE

Commissioner for Patents
United States Patent and Trademark Office
P.O. Box 1450
Alexandria, VA 22313-1450
www.uspto.gov

Charles Muserlian
Hedman and Costigan
1185 Avenue of the Americas
New York, New York 10036

In re Application of
MOSEBERG et al.
Application No.: 10/533,692
PCT No.: PCT/EP03/11422
Int. Filing Date: 15 October 2003
Priority Date: 16 October 2002
Attorney Docket No.: 188.582
For: LINEAR GUIDING UNIT

DECISION ON PETITION
UNDER 37 CFR 1.137(b)

The petition to revive under 37 CFR 1.137(b) filed 02 May 2005 in the above-captioned application is hereby **GRANTED** as follows:

Applicants' statement that "the entire delay in filing the required reply from the due date for the reply until the filing of a grantable petition under 37 CFR 1.137(b) was unintentional" meets the requirements of 37 CFR 1.137(b)(3).

A review of the application file reveals that applicants have submitted the basic national fee and the requirements of 37 CFR 1.137(b) have been satisfied. Therefore, the request to revive the application abandoned under 35 U.S.C. 371(d) is granted as to the National stage in the United States of America.

This application is being forwarded to the United States Designated/Elected Office (US/DO/EO) for continued processing including the issuance of a Notification of Missing Requirements (Form PCT/DO/EO/905) indicating that an oath or declaration along with the $130 surcharge for filing the oath or declaration after the thirty-month period is required.

Anthony Smith
Attorney-Advisor
Office of PCT Legal Administration
Telephone: (571) 272-3298
Facsimile: (571) 273-0459

UNITED STATES PATENT AND TRADEMARK OFFICE

Commissioner for Patents
United States Patent and Trademark Office
P.O. Box 1450
Alexandria, VA 22313-1450
www.uspto.gov

30 OCT 2006

WOOD, PHILLIPS, KATZ, CLARK & MORTIMER
500 W. MADISON STREET
SUITE 3800
CHICAGO IL 60661

In re Application of VANDERSLICE et al. Serial No.: 10/533,693 PCT App. No.: PCT/US03/35526 Int'l Filing Date: 07 November 2003 Priority Date: 08 November 2002 Attorney Docket No.: TEX4542P0481US For: COMBINATION PRODUCTS WITH CARBOXYLIC ACID DERIVATIVES THAT INHIBIT THE BINDING OF INTEGRINS TO THEIR RECEPTORS AND OTHER THERAPEUTIC COMPOUNDS TRANSFORMATION	DECISION ON PETITION UNDER 37 CFR 1.137(b)

The petition to revive under 37 CFR 1.137(b) filed 29 September 2006 in the above-captioned application is hereby **GRANTED** as follows:

Applicant's statement that the "entire delay in filing this required reply from the due date for the until the filing of this grantable petition under 37 CFR 1.137(b) was unintentional" meets the requirement of 37 CFR 1.137(b)(3).

A review of the application file reveals that the proper reply, that is, the sequence listing in response to the 06 June 2006 Notification of Defective Response was provided with the instant petition on 03 April 2006 and is entered. Thus, the requirements of 37 CFR 1.137(b) have been satisfied. The required petition fee of $1500 was also paid. Thus, the requirements of 37 CFR 1.137(b) have been satisfied. Therefore, the request to revive the application abandoned under 35 U.S.C. 371(d) is granted as to the National stage in the United States of America.

This application is being forwarded to the United States Designated/Elected Office for further processing including review of the power of attorney and change of address request filed on 29 September 2006. The 35 U.S.C. 371(c)(1), (c)(2) and (c)(4) date is 14 December 2005.

Cynthia M. Kratz
Attorney Advisor
Office of PCT Legal Administration

Telephone: 571-272-3286
Facsimile: 571-273-0459

United States Patent and Trademark Office

12 FEB 2007

Commissioner for Patents
United States Patent and Trademark Office
P.O. Box 1450
Alexandria, VA 22313-1450
www.uspto.gov

Bachand Law Office
PO Box 54244
Phoenix, AZ 85078-4244

In re Application of	:	
Pedersen et al.	:	
Application No.: 10/533,696	:	DECISION
PCT No.: PCT/US03/36077	:	
Int. Filing Date: 07 November 2003	:	ON
Priority Date: 08 November 2002	:	
Attorney Docket No.: 2005INO02	:	PETITION
For: Adaptive Broadband Platforms And Methods Of Operation	:	

This is in response to the petition under 37 CFR 1.47(a) filed on 25 September 2006.

BACKGROUND

This international application was filed on 07 November 2003, claimed an earliest priority date of 08 November 2002, and designated the U.S. The 30 month time period for paying the basic national fee in the United States expired at midnight on 09 May 2005 (since 08 May 2005 was a Sunday). Applicants filed *inter alia* the basic national fee on 03 May 2005.

On 21 June 2006, a Notification of Missing Requirements (Form PCT/DO/EO/905) was mailed to applicants, requiring the filing of an oath or declaration compliant with 37 CFR 1.497(a) and (b), $2900.00 in additional claim fees, and a $130.00 surcharge under 37 CFR 1.492(h).

DISCUSSION

With regard to the fees paid in this application, MPEP 607 provides in part that

> A preliminary amendment filed concurrently with a response to a Notice To File Missing Parts of Application that required the fees set forth in 37 CFR 1.16, which preliminary amendment cancels or adds claims, will be taken into account in determining the appropriate fees due in response to the Notice To File Missing Parts of Application

The instant petition is accompanied by a "Preliminary Amendment" which results in 20 total claims and 5 independent claims remaining in the application. Therefore, following the practice described at MPEP 607, payment of $200.00 for two extra independent claims at the small entity rate of $100.00 per independent claim was required as part of the (revised) required response to the Notification of Missing Requirements. Petitioner has paid this fee, as well as the $65.00 small entity surcharge under 37 CFR 1.492(h). However, it is noted that a two-month extension of time was required for the response to be considered timely; accordingly, $225.00 of the fees paid are being allocated to this purpose. This results in a balance of $95.00 prior to accounting for the petition fee. The proper fee for the petition under 37 CFR 1.47(a) is $200. Therefore, petitioner owes the resulting $105.00 balance of the petition fee.

A petition under 37 CFR 1.47(a) must be accompanied by (1) the fee under 37 CFR 1.17(h), (2) factual proof that the missing joint inventor refuses to execute the application or cannot be reached after diligent effort, (3) a statement of the last known address of the missing inventor, and (4) an oath or declaration by each 37 CFR 1.47(a) applicant on his or her own behalf and on behalf of the non-signing joint inventor.

Regarding requirement (1), the full petition has not been paid, as noted above. Therefore, requirement (1) has not been satisfied.

Regarding requirement (2), petitioner urges that the absence on the declaration of the signature of joint inventor Erling Pedersen be excused, but does not specifically indicate whether Mr. Pedersen refused to sign the declaration or, alternatively, whether he cannot be found or reached after diligent effort. Counsel's attention is respectfully drawn to MPEP 409.03(d), which states in part:

> Where inability to find or reach a nonsigning inventor "after diligent effort" is the reason for filing under 37 CFR 1.47, a statement of facts should be submitted that fully describes the exact facts which are relied on to establish that a diligent effort was made. The fact that a nonsigning inventor is on vacation or out of town and is therefore temporarily unavailable to sign the declaration is not an acceptable reason for filing under 37 CFR 1.47. Furthermore, the fact that an inventor is hospitalized and/or is not conscious is not an acceptable reason for filing under 37 CFR 1.47. 37 CFR 1.43 may be available under these circumstances. See MPEP § 409.02. Such a petition under 37 CFR 1.47 will be dismissed as inappropriate.
>
> The statement of facts must be signed, where at all possible, by a person having firsthand knowledge of the facts recited therein. Statements based on hearsay will not normally be accepted. Copies of documentary evidence such as internet searches, certified mail return receipts, cover letters of instructions, telegrams, that support a finding that the nonsigning inventor could not be found or reached should be made part of the statement. The steps taken to locate the whereabouts of the nonsigning inventor should be included >in the< statement of facts. It is important that the statement contain facts as opposed to conclusions.
>
> ...
>
> A refusal by an inventor to sign an oath or declaration when the inventor has not been presented with the application papers does not itself suggest that the inventor is refusing to join the application unless it is clear that the inventor understands exactly what he or she is being asked to sign and refuses to accept the application papers. A copy of the application papers should be sent to the last known address of the nonsigning inventor, or, if the nonsigning inventor is represented by counsel, to the address of the nonsigning inventor's attorney. The fact that an application may contain proprietary information does not relieve the 37 CFR 1.47 applicant of the responsibility to present the application papers to the inventor if the inventor is willing to receive the papers in order to sign the oath or declaration. It is noted that the inventor may obtain a complete copy of the application, unless the inventor has assigned his or her interest in the application, and the assignee has requested that the inventor not be permitted access. See MPEP § 106. It is reasonable to require that the inventor be presented with the application papers before a petition under 37 CFR 1.47 is granted since such a procedure ensures that the inventor is apprised of the application to which the oath or declaration is directed. In re Gray, 115 USPQ 80 (Comm'r Pat. 1956).

> Where a refusal of the inventor to sign the application papers is alleged, the circumstances of the presentation of the application papers and of the refusal must be specified in a statement of facts by the person who presented the inventor with the application papers and/or to whom the refusal was made. Statements by a party not present when an oral refusal is made will not be accepted. Proof that a bona fide attempt was made to present a copy of the application papers (specification, including claims, drawings, and oath or declaration) to the nonsigning inventor for signature, but the inventor refused to accept delivery of the papers or expressly stated that the application papers should not be sent, may be sufficient. When there is an express oral refusal, that fact along with the time and place of the refusal must be stated in the statement of facts. When there is an express written refusal, a copy of the document evidencing that refusal must be made part of the statement of facts. The document may be redacted to remove material not related to the inventor's reasons for refusal. When it is concluded by the 37 CFR 1.47 applicant that a nonsigning inventor's conduct constitutes a refusal, all facts upon which that conclusion is based should be stated in the statement of facts in support of the petition or directly in the petition. If there is documentary evidence to support facts alleged in the petition or in any statement of facts, such evidence should be submitted. Whenever a nonsigning inventor gives a reason for refusing to sign the application oath or declaration, that reason should be stated in the petition

Petitioner states that

> The Declaration signed by Roc A. Lastinger and a complete copy of the application including claims was sent to the last known address of Erling J. Pedersen... I sent the materials on August 8, 2006 via USPS Express Mail, certified with return receipt requested. The unopened Express Mail package was returned to me...

Further inspection of the materials accompanying the petition reveals that the USPS "Track & Confirm" sheet indicates that parcel EQ057152391US "was refused by the addressee at 8:46 am on August 17, 2006 in PHOENIX, AZ 85078 and is being returned to the sender." There is no clear indication in the application file that this was not the proper address for Mr. Pedersen. This suggests that it is not the case that he "cannot be found or reached after diligent effort" within the meaning of 37 CFR 1.47(a). As for the issue of whether the "refusal" of the parcel referenced on the "Track & Confirm" sheet evidences conduct which amounts to a refusal to execute the application, it is noted that the copy of the letter from petitioner to Mr. Pedersen refers to an "enclosed patent application" and requests that Mr. Pedersen "please carefully review and sign the Declaration enclosed." However, the letter does not specifically identify the patent application at issue (i.e., by application number). Therefore, it is not clear that an attempt was made to present Mr. Pedersen with a copy of this specific application and an oath or declaration directed to it. Therefore, it would not be appropriate to conclude that he has "refused" to execute the application within the meaning of 37 CFR 1.47(a) on the basis of the present record.

Regarding requirement (3), the petition provides the last known address of Erling Pedersen.

Regarding requirement (4), the declaration filed on 25 August 2006 is suitable for purposes of compliance with 37 CFR 1.47(a) and 1.497(a) and (b).

DECISION

The petition under 37 CFR 1.47(a) is **DISMISSED**, without prejudice.

If reconsideration on the merits of this petition is desired, a proper response must be filed within **TWO (2) MONTHS** from the mail date of this decision. Any reconsideration request should include a cover letter entitled "Renewed Petition Under 37 CFR 1.47." No additional petition fee is required. Extensions of time may be obtained under 37 CFR 1.136(a). Failure to timely file a proper response will result in **ABANDONMENT**.

Please direct any further correspondence with respect to this matter to the Assistant Commissioner for Patents, Mail Stop PCT, P.O. Box 1450, Alexandria, VA 22313-1450, and address the contents of the letter to the attention of the Office of PCT Legal Administration.

George Dombroske
PCT Legal Examiner
Office of PCT Legal Administration
Tel: (571) 272-3283
Fax: (571) 273-0459

02/12/2007 SBASHEIR 00000005 10533696

01 FC:2252 225.00 OP
02 FC:1206 95.00 OP

2 5 JUN 2007

United States Patent and Trademark Office

Commissioner for Patents
United States Patent and Trademark Office
P.O. Box 1450
Alexandria, VA 22313-1450
www.uspto.gov

Bachand Law Office
PO Box 54244
Phoenix, AZ 85078-4244

In re Application of	:	
Pedersen et al.	:	
Application No.: 10/533,696	:	DECISION
PCT No.: PCT/US03/36077	:	
Int. Filing Date: 07 November 2003	:	ON
Priority Date: 08 November 2002	:	
Attorney Docket No.: 2005INO02	:	PETITION
For: Adaptive Broadband Platforms And Methods Of Operation	:	

This is in response to the renewed petitions under 37 CFR 1.47(a) filed on 06 April 2007 and 12 April 2007.

DISCUSSION

In a Decision mailed on 12 February 2007, the petition under 37 CFR 1.47(a) filed on 25 September 2006 was dismissed without prejudice because

> Regarding requirement (1), the balance of the petition fee has been paid, thereby satisfying requirement (1).
>
> Regarding requirement (2),... Petitioner states that
>
> The Declaration signed by Roc A. Lastinger and a complete copy of the application including claims was sent to the last known address of Erling J. Pedersen... I sent the materials on August 8, 2006 via USPS Express Mail, certified with return receipt requested. The unopened Express Mail package was returned to me...
>
> Further inspection of the materials accompanying the petition reveals that the USPS "Track & Confirm" sheet indicates that parcel EQ057152391US "was refused by the addressee at 8:46 am on August 17, 2006 in PHOENIX, AZ 85078 and is being returned to the sender." There is no clear indication in the application file that this was not the proper address for Mr. Pedersen. This suggests that it is not the case that he "cannot be found or reached after diligent effort" within the meaning of 37 CFR 1.47(a). As for the issue of whether the "refusal" of the parcel referenced on the "Track & Confirm" sheet evidences conduct which amounts to a refusal to execute the application, it is noted that the copy of the letter from petitioner to Mr. Pedersen refers to an "enclosed patent application" and requests that Mr. Pedersen "please carefully review and sign the Declaration enclosed." However, the letter does not specifically identify the patent application at issue (i.e., by application number). Therefore, it is not clear that an attempt was made to present Mr. Pedersen with a copy of this specific application and an oath or declaration directed to it. Therefore, it would not be appropriate to conclude that he has "refused" to execute the application within the meaning of 37 CFR 1.47(a) on the basis of the present record.

In response, petitioner has paid the $105.00 balance of the petition fee, satisfying requirement (1).

With respect to requirement (2), petitioner states that he personally prepared and mailed via Express Mail a letter to Erling Petersen requesting that he review an enclosed copy of the instant application (which he identifies by application number) and execute and return an enclosed declaration document directed to this application. Petitioner further states that

> Soon after August 17, 2006, I personally received the USPS package EQ057152391US that was returned to me unopened. I opened that package and have in my files the entire contents of that package as described above.

The language "as described above" is interpreted as referring to the items referred to in the preceding paragraph - that is, the letter, declaration and application papers. In a telephone conference on 24 June 2007, Atty. Bachand confirmed this interpretation. This establishes that a declaration and a copy of this specific application were sent to Mr. Pedersen's last known address. As such, it would now be appropriate, within the meaning of 37 CFR 1.47(a), to interpret Mr. Pedersen's conduct as a refusal to execute the instant national stage application. Thus, requirement (2) has now been satisfied.

It is noted that petitioner filed a new declaration on 12 April 2007. As noted in the previous decision, the previous declaration, filed on 25 August 2006, was acceptable for purposes of compliance with 37 CFR 1.497(a) and (b). Therefore, the 35 U.S.C. 371(c)(1), (2) and (4) date of this application is the date of said earlier declaration, 25 August 2006.

DECISION

The petition under 37 CFR 1.47(a) is **GRANTED**.

As provided in 37 CFR 1.47(a), a notice of the filing of this application will be forwarded to the non-signing inventor at his last known address of record.

A notice of the filing of the application under 37 CFR 1.47(a) will be published in the Official Gazette.

The application is being returned to the National Stage Processing Branch for processing as the U.S. National Stage of the above-identified international application. Its date under 35 U.S.C. 371(c)(1), (2) and (4) is **25 August 2006**.

George Dombroske
PCT Legal Examiner
Office of PCT Legal Administration
Tel: (571) 272-3283
Fax: (571) 273-0459

06/25/2007 SBASHEIR 00000001 10533696
01 FC:1463 200.00 OP

25 JUN 2007

United States Patent and Trademark Office

Commissioner for Patents
United States Patent and Trademark Office
P.O. Box 1450
Alexandria, VA 22313-1450
www.uspto.gov

Erling J. Pedersen
1845 Merion Lane
Coral Springs, FL 33071

In re Application of
Pedersen et al.
Application No.: 10/533,696
PCT No.: PCT/US03/36077
Int. Filing Date: 07 November 2003
Priority Date: 08 November 2002
Attorney Docket No.: 2005IN02
For: Adaptive Broadband Platforms
And Methods Of Operation

Dear Mr. Pedersen:

You are named as a joint inventor in the above identified United States patent application, filed under the provisions of 35 U.S.C. 116 (United States Code), and 37 CFR 1.47(a), Rules of Practice in Patent Cases. Should a patent be granted on the application you will be designated therein as a joint inventor.

As a named inventor you are entitled to inspect any paper in the file wrapper of the application, order copies of all or any part thereof (at a prepaid cost per 37 CFR 1.19) or make your position of record in the application. Alternatively, you may arrange to do any of the preceding through a registered patent attorney or agent presenting written authorization from you. If you care to join the application, counsel of record (see below) would presumably assist you. Joining in the application would entail the filing of an appropriate oath or declaration by you pursuant to 37 CFR 1.63.

Telephone inquiries regarding this communication should be directed to the undersigned at (571) 272-3283. Requests for information regarding your application should be directed to the File Information Unit at (703) 308-2733. Requests for information regarding how to pay for and order a copy of the application, or a specific paper in the application, should be directed to Certification Division at (703) 308-9726 or 1(800) 972-6382 (outside the Washington D.C. area).

Any further correspondence with respect to this matter should be addressed to the Assistant Commissioner for Patents, Mail Stop PCT, P.O. Box 1450, Alexandria, VA 22313-1450, with the contents of the letter marked to the attention of the Office of PCT Legal Administration.

George Dombroske
PCT Legal Examiner
Office of PCT Legal Administration
Tel: (571) 272-3283
Fax: (571) 273-0459

Bachand Law Office
PO Box 54244
Phoenix, AZ 85078-4244

United States Patent and Trademark Office

Commissioner for Patents
United States Patent and Trademark Office
P.O. Box 1450
Alexandria, VA 22313-1450
www.uspto.gov

OFFICIAL GAZETTE NOTICE

37 CFR 1.47 Notice by Publication

Notice is hereby given of the filing of an application with a petition under 37 CFR 1.47 requesting acceptance of the application without the signature of a joint inventor. The petition has been granted. A notice has been sent to the last known address of the non-signing inventor. The inventor whose signature is missing (Erling J. PEDERSEN) may join in the application by promptly filing an appropriate oath or declaration complying with 37 CFR 1.63. The international application number is PCT/US03/36077 and was filed on November 7, 2003 in the names of Erling J. PEDERSEN and Roc A. LASTINGER for the invention entitled ADAPTIVE BROADBAND PLATFORMS AND METHODS OF OPERATION. The national stage application number is 10/533,696 and has a 35 U.S.C. 371(c)(1), (2) and (4) date of August 25, 2006.

20 SEP 2006

UNITED STATES PATENT AND TRADEMARK OFFICE

Commissioner for Patents
United States Patent and Trademark Office
P.O. Box 1450
Alexandria, VA 22313-1450
www.uspto.gov

09/20/2006 SBASHEIR 00000003 134500 10533700
01 FC:1462 400.00 DA

MORGAN & FINNEGAN, L.L.P.
3 WORLD FINANCIAL CENTER
NEW YORK, NY 10281-2101

In re Application of	:	
TAKAI, Toshiyuki et al.	:	
Application No.: 10/533,700	:	DECISION ON
PCT No.: PCT/JP03/13958	:	
Int. Filing Date: 29 October 2003	:	PETITION
Priority Date: 29 October 2002	:	
Attorney's Docket No.: 4439-4032	:	UNDER 37 CFR 1.182
For: NONHUMAN MODEL ANIMAL ...	:	
AND/OR FISHER SYNDROME	:	

This decision responds to "Petition Under 37 C.F.R. §1.182," filed with the United States Patent and Trademark Office on 17 March 2006. The petition fee will be charged to deposit account no. 13-4500, as authorized.

BACKGROUND

On 29 October 2003, applicant filed international application PCT/JP03/13958, claiming a priority date of 29 October 2002. A copy of the international application was transmitted to the Office by the International Bureau on 13 May 2004. The deadline for entry into the national stage in the United States was midnight 29 April 2005.

On 26 April 2005, applicant filed a submission for entry into the national stage in the United States which was accompanied by the basic national fee.

On 28 October 2005, applicant submitted a declaration of the inventors and the surcharge for late filing of the search fee, examination fee or the oath or declaration.

On 17 February 2006, the Office mailed a Notification of Missing Requirements (Form PCT/DO/EO/905) indicating, *inter alia*, that the declaration was executed by an inventor not listed on the international application and was not executed by an inventor who had been listed on the international application. It indicated that an oath or declaration in compliance with 37 CFR 1.497(a)-(b) was required.

On 17 March 2006, applicant submitted a petition under 37 CFR 1.182.

DISCUSSION

The declaration is executed by Akiko Sugahara. The international application listed Syoko Sugawara.

Applicant has supplied a statement signed by Akiko Sugahara stating that Akiko Sugahara is the inventor's name and that the international application incorrectly listed the inventor's name. This is an adequate explanation.

CONCLUSION

Applicant's petition under 37 CFR 1.182 is **GRANTED**.

This application is being forwarded to the National Phase Processing Branch Division of PCT Operations for further processing. The application has a 35 U.S.C. 371(c)(1), (c)(2) and (c)(4) date of 28 October 2005.

Erin P. Thomson
Attorney Advisor
PCT Legal Administration

Telephone: 571-272-3292
Facsimile: 571-273-0459

UNITED STATES PATENT AND TRADEMARK OFFICE

Commissioner for Patents
United States Patent and Trademark Office
P.O. Box 1450
Alexandria, VA 22313-1450
www.uspto.gov

MAILED

MAY 24 2010
OFFICE OF PETITIONS

COLLARD & ROE, P.C.
1077 NORTHERN BOULEVARD
ROSLYN NY 11576

In re Application of	:	
Said MANSOURI	:	
Application No. 10/533,709	:	NOTICE
Filed: May 03, 2005	:	
Attorney Docket No. **MANSOURI, S. - 1**	:	

This is a notice regarding your request for acceptance of a fee deficiency submission under 37 CFR 1.28.

The Office no longer investigates or rejects original or reissue patent under 37 CFR 1.56. **1098 Off. Gaz. Pat. Office 502 (January 3, 1989)**. Therefore, nothing in this Notice is intended to imply that an investigation was done.

Your fee deficiency submission under 37 CFR 1.28 is hereby **ACCEPTED**.

This patent is no longer entitled to small entity status. Accordingly, all future fees paid in this patent must be paid at the large entity rate.

Inquiries related to this communication should be directed to the undersigned at (571) 272-2783.

/Tredelle D. Jackson/
Paralegal Specialist
Office of Petitions

UNITED STATES PATENT AND TRADEMARK OFFICE

Commissioner for Patents
United States Patent and Trademark Office
P.O. Box 1450
Alexandria, VA 22313-1450
www.uspto.gov

PHILIPS INTELLECTUAL PROPERTY & STANDARDS
P.O. BOX 3001
BRIARCLIFF MANOR NY 10510

COPY MAILED

MAR 1 8 2009

OFFICE OF PETITIONS

In re Application of
Leurs
Application No. 10/533,738
Filed: May 4, 2005
Attorney Docket No. NL021108US

DECISION ON PETITION

This is a decision on the petition under the unintentional provisions of 37 CFR 1.137(b), filed February 23, 2009, to revive the above-identified application.

The petition is **GRANTED**.

The petition satisfies the conditions for revival pursuant to the provisions of 37 CFR 1.137(b) in that (1) the reply in the form of an RCE and an amendment; (2) the petition fee; and (3) the required statement of unintentional delay have been received. Accordingly, the reply to the final rejection mailed June 5, 2008, is accepted as having been unintentionally delayed.

Telephone inquiries concerning this decision should be directed to the undersigned at (571) 272-3208.

This application is being referred to Technology Center AU 2424 for appropriate action by the Examiner in the normal course of business on the reply received February 23, 2009.

Karen Creasy

Karen Creasy
Petitions Examiner
Office of Petitions

UNITED STATES PATENT AND TRADEMARK OFFICE

Commissioner for Patents
United States Patent and Trademark Office
P.O. Box 1450
Alexandria, VA 22313-1450
www.uspto.gov

SONNENSCHEIN NATH & ROSENTHAL LLP
P.O. BOX 061080
WACKER DRIVE STATION, SEARS TOWER
CHICAGO IL 60606-1080

COPY MAILED

AUG 0 4 2008

OFFICE OF PETITIONS

In re Application of :
Benjamin Ross HERBERT :
Application No. 10/533,742 : DECISION ON PETITION
Filed: March 3, 2006 :
Attorney Docket No. 60023150-0010 :

This is a decision on the petition under the unintentional provisions of 37 CFR 1.137(b), filed February 15, 2008, to revive the above-identified application.

The petition is **GRANTED**.

The application became abandoned for failure to reply in a timely manner to the non-final Office action mailed, July 10, 2007, which set a shortened statutory period for reply of three (3) months. No extensions of time under the provisions of 37 CFR 1.136(a) were obtained. Accordingly, the application became abandoned on October 11, 2007.

The petition satisfies the requirements of 37 CFR 1.137(b) in that petitioner has supplied (1) the reply in the form of an amendment, (2) the petition fee of $1540; and (3) an adequate statement of unintentional delay.

An extension of time under 37 CFR 1.136 must be filed prior to the expiration of the maximum extendable period for reply. *See* In re Application of S., 8 USPQ2d 1630, 1631 (Comm'r Pats. 1988). Since the $2230 extension of time fee submitted with the petition on February 15, 2008 was subsequent to the maximum extendable period for reply, this fee is unnecessary and will be credited to petitioner's deposit account 19-3140.

Telephone inquiries concerning this decision should be directed to Diane Goodwyn at (571) 272-6735.

This application is being referred to Technology Center AU 1656 for appropriate action by the Examiner in the normal course of business on the reply received February 15, 2008.

Thurman Page
Petitions Examiner
Office of Petitions

UNITED STATES PATENT AND TRADEMARK OFFICE

Commissioner for Patents
United States Patent and Trademark Office
P.O. Box 1450
Alexandria, VA 22313-1450
www.uspto.gov

SLEEP AND BREATHING RESEARCH INSTITUTE
SUITE 10
1275 OLENTANGY RIVER RD
COLUMBUS OH 43212

COPY MAILED
NOV 24 2008

In re Application of	:	
Lawrence A. LYNN	:	
Application No. 10/533,749	:	DECISION ON PETITION
Filed: May 10, 2005	:	
Attorney Docket No.	:	

This is a decision on the petition under the unintentional provisions of 37 CFR 1.137(b), filed September 04, 2008, to revive the above-identified application.

The petition is **GRANTED**.

The application became abandoned for failure to timely file a reply within the meaning of 37 CFR 1.113 to the final Office action of December 21, 2007. The proposed reply required for consideration of a petition to revive must be a Notice of Appeal (and appeal fee required by 37 CFR 41.20(b)(2), an amendment that *prima facie* places the application in condition for allowance, a Request for Continued Examination and submission (37 CFR 1.114), or the filing of a continuing application under 37 CFR 1.53(b). See MPEP 711.03(c)(III)(A)(2). A two (2) month extension of time pursuant to the provisions of 37 CFR 1.136(a) was obtained. Accordingly, the date of abandonment of this application is May 22, 2008.

The petition satisfies the requirements of 37 CFR 1.137(b) in that petitioner has supplied (1) the reply in the form of a Request for Continued Examination (RCE) and fee of $405.00, and the submission required by 37 CFR 1.114; (2) the petition fee of $770.00; and (3) a proper statement of unintentional delay. Accordingly, the reply to the final Office action of December 21, 2007 is accepted as having been unintentionally delayed.

Telephone inquiries concerning this decision should be directed to the undersigned at (571) 272-4231.

This application is being referred to Technology Center AU 3767 for processing of the RCE and for appropriate action by the Examiner in the normal course of business on the amendment submitted in accordance with 37 CFR 1.114.

Michelle R. Eason
Paralegal Specialist
Office of Petition

UNITED STATES PATENT AND TRADEMARK OFFICE

Commissioner for Patents
United States Patent and Trademark Office
P.O. Box 1450
Alexandria, VA 22313-1450
www.uspto.gov

Young & Thompson
745 South 23rd Street
2nd Floor
Arlington, VA 22202

18 JUL 2006

In re Application of FLATTIN et al. U.S. Application No.: 10/533,772 PCT No.: PCT/FR03/03257 Int. Filing Date: 31 October 2003 Priority Date: 04 November 2002 Attorney Docket No.: 0579-1088 For: MICROCIRCUIT CARD COMPRISING MEANS FOR PUBLISHING ITS COMPUTER OBJECTS	:	DECISION ON PETITION UNDER 37 CFR 1.47(a)

This decision is issued in response to applicants' "Petition under 37 CFR 1.47(a)" filed 22 June 2006 to accept the application without the signature of joint-inventor, Christophe Louis.

BACKGROUND

On 31 October 2003, applicants filed international application PCT/FR03/03257 which claimed a priority date of 04 November 2002. A copy of the international application was communicated to the United States Patent and Trademark Office from the International Bureau on 21 May 2004. Pursuant to 37 CFR 1.495, the thirty-month period for paying the basic national fee in the United States expired at midnight on 04 May 2005.

On 04 May 2005, applicants filed a transmittal letter for entry into the national stage in the United States, which accompanied by, inter alia: the requisite basic national fee as required by 35 U.S.C. 371(c)(1); a preliminary amendment; and an information disclosure statement.

On 22 February 2006, the United Stated Designated/Elected Office mailed a Notification of Missing Requirements under 35 U.S.C. 371 (Form PCT/DO/EO/905) indicating that an oath or declaration in compliance with 37 CFR 1.497(a) and (b) must be filed. The notification set a two-month time limit in which to respond.

On 22 June 2006, applicants filed the present petition under 37 CFR 1.47(a) .

DISCUSSION

A petition under 37 CFR 1.47(a) must be accompanied by: (1) the fee under 37 CFR 1.17, (2) factual proof that the missing joint inventor refuses to execute the application or cannot be reached after diligent effort, (3) a statement of the last known address of the missing inventor, and (4) an oath or declaration by each 37 CFR 1.47(a) applicant on his or her own behalf and behalf of the nonsigning joint inventor. Items (1) - (4) have been satisfied.

A review of the present petition and the accompanying papers reveal that applicants have satisfied item (2), in that the applicants have shown that a bona fide attempt was made to present the application papers, including the specification, claims, and drawings to Christophe Louis. The steps taken by petitioner are sufficient to show that Christophe Louis has refused to execute the application.

Accordingly, it is appropriate to accord the national stage application status under 37 CFR 1.47(a).

CONCLUSION

The renewed petition under 37 CFR 1.47(a) is **GRANTED**.

As provided in 37 CFR 1.47(a), a notice of the filing of this application will be forwarded to the nonsigning inventor at his last known address of record. A notice of the filing of the application under 37 CFR 1.47(a) will be published in the Official Gazette.

This application is being returned to the United States Designated/Elected Office for processing in accordance with this decision.

Anthony Smith

Anthony Smith
Attorney-Advisor
Office of PCT Legal Administration
Tel: (571) 272-3298
Fax: (571) 273-0459

UNITED STATES PATENT AND TRADEMARK OFFICE

UNITED STATES DEPARTMENT OF COMMERCE
United States Patent and Trademark Office
Address: COMMISSIONER FOR PATENTS
P.O. Box 1450
Alexandria, Virginia 22313-1450
www.uspto.gov

KENYON & KENYON LLP
ONE BROADWAY
NEW YORK, NY 10004

Mail Date: 04/21/2010

Applicant	: Stephan Simon	: DECISION ON REQUEST FOR
Patent Number	: 7617048	: RECALCULATION of PATENT
Issue Date	: 11/10/2009	: TERM ADJUSTMENT IN VIEW
Appliction No	: 10/533,778	: OF WYETH AND NOTICE OF INTENT TO
Filed	: 05/03/2005	: ISSUE CERTIFICATE OF CORRECTION
		:

The Request for Recalculation is **GRANTED** to the extent indicated.

The patent term adjustment has been determined to be **740** days. The USPTO will *sua sponte* issue a certificate of correction reflecting the amount of PTA days determined by the recalculation.

Prior to the issuance of the certificate of correction, the USPTO will afford patentee an opportunity to be heard and request reconsideration. Accordingly, patentee has **one month or thirty (30) days**, whichever is longer, to file a request for reconsideration of this patent term adjustment calculation. See 35 U.S.C. 154(b)(3)(B)(ii) and 37 CFR 1.322(a)(4). No extensions of time will be granted under 37 CFR 1.136.

Patentee should use document code PET.OP if electronically filing a request for reconsideration of this patent term adjustment calculation. The patentee must also include the information required by 37 CFR 1.705(b)(2) and the fee required by 37 CFR 1.18(e). If patentee does not file a timely request for reconsideration of this patent term adjustment calculation including the information required by 37 CFR 1.705(b)(2) and the fee required by 37 CFR 1.18(e), the USPTO will issue a certificate of correction reflecting the PTA determination noted above.

Patentee should be aware that in order to preserve the right to review in the United States District Court for the District of Columbia of the USPTO patent term adjustment determination, patentee must ensure that he or she also take the steps required under 35 U.S.C. 154(b)(4)(A) in a timely manner. Nothing in the request for recalculation should be construed as providing an alternative time frame for commencing a civil action under 35 U.S.C. 154(b)(4)(A).

Any questions concerning this decision should be directed to the Office of Patent Legal Administration at 571-272-7702.

UNITED STATES PATENT AND TRADEMARK OFFICE

Commissioner for Patents
United States Patent and Trademark Office
P.O. Box 1450
Alexandria, VA 22313-1450
www.uspto.gov

0 9 JAN 2007

Crowell & Moring LLP
Intellectual Property Group
PO Box 14300
Washington, DC 20044-4300

In re Application of GEORGESOHN, Harald Application No.: 10/533,780 PCT No.: PCT/EP2003/11297 Int. Filing Date: 13 October 2003 Priority Date: 05 November 2002 Docket No.: 095309.56273US For: DEVICE FOR LOCKING A TANK AND METHOD FOR MOUNTING A LOCKING DEVICE	DECISION ON PETITION UNDER 37 CFR 1.181

This decision is in response to "Request For Corrected Filing Receipt," filed in the above-captioned application on 25 October 2006.

BACKGROUND

On 13 October 2003, applicants filed international application no. PCT/EP2003/11297, claiming a priority date of 21 May 2004. A copy of the international application was transmitted to the Office by the International Bureau on 21 May 2004. The thirty month deadline for payment of the basic national fee in the United States was midnight, 05 May 2005.

On 04 May 2005, applicants submitted a transmittal letter for entry into that national phase in the United States accompanied by the basic national fee.

On 06 December 2005, the Office mailed Notification of Missing Requirements (Form PCT/DO/EO/905) indicating that an oath or declaration in compliance with 37 CFR 1.497(a)-(b) was required.

Applicants filed a declaration of the inventor. It was accorded a receipt date of 26 February 2006.

On 12 June 2006, the Office mailed a Notice of Acceptance, indicating that the application had a 35 U.S.C. 371(c)(1), (c)(2) and (c)(4) date of 26 February 2006 and a 35 U.S.C. 371 requirements completion date of 13 April 2006.

On 25 October 2006, applicants submitted this petition under 37 CFR 1.181, accompanied by a copy of a declaration, a postcard receipt for the declaration stamped "06 February 2006" and request for a corrected filing receipt.

DISCUSSION

Applicants have provided a postcard receipt date-stamped by the Office and listing the declaration. The copy of the declaration is accepted as having been received on 06 February 2006, rather than 26 February 2006, with which it was stamped.

Further, the Notification of Acceptance does not list the priority claim information, which resulted in an incorrect listing of the "date of completion of all 35 U.S.C. 371 requirements". That date should be 06 February 2006, as should the requirements under 35 U.S.C. 371(c)(1), (c)(2) and (c)(4).

CONCLUSION

For the reasons discussed above, applicants' petition under 37 CFR 1.181 for a corrected filing receipt is **GRANTED**.

The Notification of Acceptance (Form PCT/DO/EO/909) mailed 12 June 2006 is **VACATED**.

This application is being forwarded to the National Stage processing division of the Office of PCT Operations for further processing consistent with this decision. The application has a 35 U.S.C. 371(c)(1), (c)(2), and (c)(4) date of 06 February 2006.

Erin P. Thomson

Erin P. Thomson
Attorney Advisor
PCT Legal Administration

Telephone: 571-272-3292
Facsimile: 571-273-0459

UNITED STATES PATENT AND TRADEMARK OFFICE

Commissioner for Patents
United States Patent and Trademark Office
P.O. Box 1450
Alexandria, VA 22313-1450
www.uspto.gov

CROWELL & MORING LLP
INTELLECTUAL PROPERTY GROUP
P.O. BOX 14300
WASHINGTON DC 20044-4300

COPY MAILED

SEP 19 2007

OFFICE OF PETITIONS

Applicant: Georgesohn
Appl. No.: 10/533,780
International Filing Date: October 13, 2003
Title: DEVICE FOR LOCKING A FILLER NECK COMPARTMENT COVER AND METHOD OF MOUNTING THE LOCKING DEVICE
Attorney Docket No.: 095309.56273US
Pub. No.: US 2006/0208523 A1
Pub. Date: September 21, 2006

This is a decision on the request for a "Corrected Notice of Publication", received on October 25, 2005, for the above-identified application

The request is DISMISSED.

Applicant requests that the Notice of Publication of Application be corrected because the 371(c) date is incorrect identified.

The Notice of Publication cannot be reprinted a new 371(c) date as requested, as there is not a method to regenerate the Notice. The notice was printed with the 371(c) date as indicated on the Filing Receipt mailed June 12, 2006. To avoid this type of problem in the future, applicant's representative should make request a corrected filing receipt.

Inquiries relating to this matter may be directed to Mark Polutta at (571) 272-7709.

Mark Polutta
Legal Advisor
Office of Patent Legal Administration
Office of the Deputy Commissioner
for Patent Examination Policy

UNITED STATES PATENT AND TRADEMARK OFFICE

Commissioner for Patents
United States Patent and Trademark Office
P.O. Box 1450
Alexandria, VA 22313-1450
www.uspto.gov

07 NOV 2006

Clifford J. Mass
Ladas & Parry, LLP
26 West 61st Street
New York, NY 10023

In re Application of	:	
BARSOVA, et al.	:	DECISION ON PETITION
U.S. Application No.: 10/533,781	:	
PCT No.: PCT/RU03/00525	:	UNDER 37 CFR 1.181
Int. Filing Date: 26 November 2003	:	
Priority Date: 26 December 2002	:	
Attorney Docket No.: U 015759-8	:	
For: FLUORESCENT PROTEINS FROM COPEPODA	:	
SPECIES AND METHODS FOR USING SAME	:	

This decision is in response to applicant's "Request to Withdraw Holding of Abandonment" filed on 01 August 2006 in the United States Patent and Trademark Office (USPTO). No petition fee is required.

BACKGROUND

On 26 November 2003, applicant filed international application PCT/RU03/00525, which claimed priority of an earlier application filed 26 December 2002. Pursuant to 37 CFR 1.495, the deadline for payment of the basic national fee in the United States was to expire 30 months from the priority date, 26 June 2005.

On 04 May 2005, applicant filed a transmittal letter for entry into the national stage in the United States, which was accompanied by the requisite basic national fee as required by 35 U.S.C. 371(c)(1).

On 19 August 2005, applicant was mailed a "NOTIFICATION OF MISSING REQUIREMENTS UNDER 35 U.S.C. 371" (Form PCT/DO/EO/905) informing applicant of the need to provide a signed oath or declaration of the inventors, in compliance with 37 CFR 1.497(a) and (b), identifying the application by the international application number and international filing date and provide payment of the surcharge for providing an oath or declaration later than thirty months from the priority date. In addition, applicant was informed of the need to provide a computer readable version of the sequence listing. Applicant was afforded two months to respond.

On 24 July 2006, applicant was mailed a "Notification of Abandonment" (Form PCT/DO/EO/909).

On 01 August 2006, applicant filed the present petition under 37 CFR 1.181.

DISCUSSION

A review of the application file finds applicant's original 19 October 2005 submission contained therein. As such, there is no need to consider applicant's petition as to accepting the presently filed copies of the originally filed papers. A review of the 19 October 2005 submission finds that it was timely filed and satisfied all of the concerns raised in the Form PCT/DO/EO/905 mailed 19 August 2005. Therefore, it is proper to grant applicant's petition to withdraw the holding of abandonment for this application.

CONCLUSION

Applicant's petition under 37 CFR 1.181 is **GRANTED**.

The "Notification of Abandonment" (Form PCT/DO/EO/909) mailed 24 July 2006 is hereby **VACATED**.

A review of the application file reveals that all of the requirements of 35 U.S.C. 371 for entry into the national stage in the United States have been satisfied.

The application has an international filing date of 26 November 2003 under 35 U.S.C. 363 and will be given a date of **19 October 2005** under 35 U.S.C. 371(c)(1), (c)(2) and (c)(4).

This application is being returned to the United States Designated/Elected Office (DO/EO/US) for treatment in accordance with this decision.

Derek A. Putonen
Attorney Advisor
Office of PCT Legal Administration
Tel: (571) 272-3294
Fax: (571) 273-0459

UNITED STATES PATENT AND TRADEMARK OFFICE

Commissioner for Patents
United States Patent and Trademark Office
P.O. Box 1450
Alexandria, VA 22313-1450
www.uspto.gov

MAILED

APR 23 2010

OFFICE OF PETITIONS

BOZICEVIC, FIELD & FRANCIS LLP
1900 UNIVERSITY AVENUE
SUITE 200
EAST PALO ALTO CA 94303

In re Application of	:	
Ekaterina Vladimirovna Barsova, et al.	:	
Application No. 10/533,781	:	NOTICE
Filed: October 19, 2005	:	
Attorney Docket No. EURE-005	:	

This is a notice regarding your request for acceptance of a fee deficiency submission under 37 CFR 1.28.

The Office no longer investigates or rejects original or reissue patent under 37 CFR 1.56. **1098 Off. Gaz. Pat. Office 502 (January 3, 1989)**. Therefore, nothing in this Notice is intended to imply that an investigation was done.

Your fee deficiency submission under 37 CFR 1.28 is hereby **ACCEPTED**.

This patent is no longer entitled to small entity status. Accordingly, all future fees paid in this patent must be paid at the large entity rate.

Inquiries related to this communication should be directed to the undersigned at (571) 272-2991.

Terri Johnson

Terri Johnson
Petitions Examiner
Office of Petitions

08 OCT 2005

#3

UNITED STATES PATENT AND TRADEMARK OFFICE

Commissioner for Patents
United States Patent and Trademark Office
P.O. Box 1450
Alexandria, VA 22313-1450
www.uspto.gov

J.D. Evans
Crowell & Moring LLP
Intellectual Property Group
P.O. Box 14300
Washington, D.C. 20044-4300

In re Application of Kobayashi, et al. Serial No.: 10/533,788 PCT No.: PCT/JP03/13924 Int. Filing Date: 30 October 2003 Priority Date: 05 November 2002 Attorney's Docket No.: 038788.56253US For: FLUORINE-CONTAINING VINYL ETHERS, THEIR POLYMERS, AND RESIST COMPOSITIONS USING SUCH POLYMERS	DECISION

This decision is responsive to the "SUBMISSION OF SUBSTITUTE DATA SHEET" filed 16 September 2005.

BACKGROUND

On 30 October 2003, applicants filed international application PCT/JP03/13924, which claimed priority of earlier Japanese applications, the earliest of which was filed 05 November 2002. Accordingly, the thirty-month period for paying the basic national fee for the national stage in the United States expired at midnight on 05 May 2005.

On 04 May 2005, applicants filed a transmittal letter for entry into the national stage in the United States. The transmittal letter was accompanied by, *inter alia*, an application data sheet, a declaration and a check for the basic national fee. These papers were assigned Application No. 10/533,788.

On 16 September 2005, applicants filed the current paper along with a request for a filing receipt and "NOTIFICATION OF ACCEPTANCE OF APPLICATION UNDER 35 U.S.C. 371 AND 37 CFR 1.494 OR 1.495" (Form PCT/DO/EO/903).

DISCUSSION

MPEP § 601.05 states, in part:

When submitting an application data sheet supplemental to the initial filing of the application, to correct, modify, or augment the original application data sheet, the following applies:

(A) the supplemental application data sheet should be labeled "Supplemental Application Data Sheet;"

(B) a full replacement copy of the original application data sheet should be submitted with any changes or additions underlined. For deletions without replacement data, use strike-through;

(C) the footer information should include the word "Supplemental" in place of "Initial" and should also contain the Application Number and Filing Date.

The substitute application data sheet is not labeled "Supplemental Application Data Sheet." Further, a full replacement copy of the original has not been provided with any changes underlined. Therefore, the application data sheet cannot be entered.

CONCLUSION

The request to enter the substitute application data sheet is **DISMISSED**.

This application is being forwarded to the national stage office for further processing in accordance with this decision, and if appropriate preparation of the "NOTIFICATION OF ACCEPTANCE OF APPLICATION UNDER 35 U.S.C. 371 AND 37 CFR 1.494 OR 1.495" (Form PCT/DO/EO/903) and the official filing receipt.

Debra Brittingham
PCT Special Programs Examiner
Office of PCT Legal Administration

Richard Cole
PCT Legal Examiner
Office of PCT Legal Administration

Tel: (571) 272-3280
Fax: (571) 273-0459

UNITED STATES PATENT AND TRADEMARK OFFICE

UNITED STATES DEPARTMENT OF COMMERCE
United States Patent and Trademark Office
Address: COMMISSIONER FOR PATENTS
P.O. Box 1450
Alexandria, Virginia 22313-1450
www.uspto.gov

BIRCH STEWART KOLASCH & BIRCH
PO BOX 747
FALLS CHURCH, VA 22040-0747

Mail Date: 04/20/2010

Applicant	: Ingemar Berndtsson	: DECISION ON REQUEST FOR
Patent Number	: 7608223	: RECALCULATION of PATENT
Issue Date	: 10/27/2009	: TERM ADJUSTMENT IN VIEW
Appliction No	: 10/533,790	: OF WYETH AND NOTICE OF INTENT TO
Filed	: 05/04/2005	: ISSUE CERTIFICATE OF CORRECTION
		:

The Request for Recalculation is **GRANTED** to the extent indicated.

The patent term adjustment has been determined to be **1183** days. The USPTO will *sua sponte* issue a certificate of correction reflecting the amount of PTA days determined by the recalculation.

Prior to the issuance of the certificate of correction, the USPTO will afford patentee an opportunity to be heard and request reconsideration. Accordingly, patentee has **one month or thirty (30) days**, whichever is longer, to file a request for reconsideration of this patent term adjustment calculation. See 35 U.S.C. 154(b)(3)(B)(ii) and 37 CFR 1.322(a)(4). No extensions of time will be granted under 37 CFR 1.136.

Patentee should use document code PET.OP if electronically filing a request for reconsideration of this patent term adjustment calculation. The patentee must also include the information required by 37 CFR 1.705(b)(2) and the fee required by 37 CFR 1.18(e). If patentee does not file a timely request for reconsideration of this patent term adjustment calculation including the information required by 37 CFR 1.705(b)(2) and the fee required by 37 CFR 1.18(e), the USPTO will issue a certificate of correction reflecting the PTA determination noted above.

Patentee should be aware that in order to preserve the right to review in the United States District Court for the District of Columbia of the USPTO patent term adjustment determination, patentee must ensure that he or she also take the steps required under 35 U.S.C. 154(b)(4)(A) in a timely manner. Nothing in the request for recalculation should be construed as providing an alternative time frame for commencing a civil action under 35 U.S.C. 154(b)(4)(A).

Any questions concerning this decision should be directed to the Office of Patent Legal Administration at 571-272-7702.

UNITED STATES PATENT AND TRADEMARK OFFICE

10-29-08

Commissioner for Patents
United States Patent and Trademark Office
P.O. Box 1450
Alexandria, VA 22313-1450
www.uspto.gov

Patent No. : 7,259,290
Ser. No. : 10/533,796
Inventor(s) : Miyakawa, et. al.
Issued : August 21, 2007
Title : ANIMAL MODEL OF HUMAN HEMATOPOIETIC TUMOR
Docket No. : 38331-0006

Re: Request for Certificate of Correction

Consideration has been given your request for the issuance of a certificate of correction for the above-identified patent under the provisions of Rule(s) 1.322 or 1.323.

Assignees' names and addresses (assignment data) printed in a patent, are based *solely* on information supplied in the appropriate space for identifying the assignment data, i.e., item 3 of the Issue Fee Transmittal Form PTOL-85B. Granting of a request under 37 CFR 3.81(b) is required to correct applicant's error providing ***incorrect or erroneous*** assignment data, *before* issuance of a Certificate of Correction, under 37 CFR 1.323 *(see Manual of Patent Examining Procedures (M.P.E.P) Chp.1400, sect. 1481).* This procedure is required *at any time after the issue fee is paid*, including after issuance of the patent.

In view of the foregoing, your request is hereby denied.

A request to correct the Assignee under 37 CFR 3.81(b) should include:

A. **the processing fee set forth in 37 CFR 1.117(h) (currently $130);**
B. a statement that the failure to include the correct assignee name on the PTOL-85B was inadvertent; and
C. a copy of the Notice of Recordation of Assignment Document, reflecting the reel and frame number where the assignment(s) is recorded and/or reflecting proof of *the date* the assignment was submitted for recordation.

In the Request, Applicant(s) may request that the file be forwarded to Certificates of Correction Branch, for issuance of a Certificate of Correction, if the Request is granted.

Any request under 37 CFR 3.81(b) should be directed to the following address or facsimile number:

By mail: Mail Stop PETITIONS
Commissioner for Patents
Post Office Box 1450
Alexandria, VA 22313-1450

By hand: Customer Service Window
Mail Stop Petitions
Randolph Building
401 Dulany Street
Alexandria, VA 22314

By fax: (703) 872-9306
ATTN: Office of Petitions

If a fee (currently $100) was previously submitted for consideration of a Request for Certificate of Correction, under CFR 1.323, to correct assignment data, , no additional fee is required.

Eva James
For Mary Diggs
Decisions & Certificates
of Correction Branch
(703) **308-9390 ext. 124** or 105

Heller Ehrman LLP, Attn: Patent Department
4350 La Jolla Village Drive 7th Floor
San Diego, CA 92122

ej

UNITED STATES PATENT AND TRADEMARK OFFICE

Commissioner for Patents
United States Patent and Trademark Office
P.O. Box 1450
Alexandria, VA 22313-1450
www.uspto.gov

HELLER EHRMAN LLP
4350 LA JOLLA VILLAGE DRIVE
7TH FLOOR
SAN DIEGO, CA 92122

MAILED

MAR 13 2009

OFFICE OF PETITIONS

In re Patent No. 7,259,290	:	
Issue Date: August 21, 2007	:	
Application No. 10/533,796	:	ON PETITION
Filed: May 4, 2005	:	
Attorney Docket No. 38331-0006	:	

This is a decision on the petition filed January 29, 2009, which is being treated as a request under 37 CFR 3.81(b)[1] to correct the name of the assignee on the front page of the above-identified patent by way of a Certificate of Correction.

The request is **GRANTED**.

Telephone inquiries concerning this decision may be directed to the April M. Wise at (571) 272-1642. Inquiries regarding the issuance of a certificate of correction should be directed to the Certificate of Correction Branch at (571) 272-4200.

The Certificates of Correction Branch will be notified of this decision granting the petition under 37 CFR 3.81(b) and directing issuance of the requested Certificate of Correction.

/Carl Friedman/
Carl Friedman
Petitions Examiner
Office of Petitions

[1] *See* MPEP 1309, subsection II; and Official Gazette of June 22, 2004.

UNITED STATES PATENT AND TRADEMARK OFFICE

COMMISSIONER FOR PATENTS
UNITED STATES PATENT AND TRADEMARK OFFICE
P.O. BOX 1450
ALEXANDRIA, VA 22313-1450
www.uspto.gov

MORGAN & FINNEGAN, L.L.P.
3 WORLD FINANCIAL CENTER
NEW YORK NY 10281-2101

COPY MAILED

FEB 12 2009

OFFICE OF PETITIONS

In re Application of	:	
OSARA et al.	:	
Application No. 10/533,798	:	ON APPLICATION FOR
Filed: 05/04/2005	:	PATENT TERM ADJUSTMENT
Attorney Docket No. 4819-4743	:	

This is in response to the "STATEMENT REGARDING PATENT TERM ADJUSTMENT UNDER WYETH V. DUDAS" filed November 14, 2008, which is properly being treated under the provisions of 37 CFR 1.705(b). Applicant requests that the determination of patent term adjustment be increased by 123 days to 597 days. Applicant requests this correction on the basis that the Office will take in excess of three years to issue this patent and in light of the recent court decision in Wyeth v. Dudas, No. 07-1492 (D.D.C. September 30, 2008).

As the instant application for patent term adjustment requests reconsideration of the patent term adjustment as it relates to the Office's failure to issue the patent within three years of the filing date, a decision is being **held in abeyance** until after the actual patent date. Knowledge of the actual date the patent issues is required to calculate the amount, if any, of additional patent term patentee is entitled to for Office failure to issue the patent within three years. See 37 CFR 1.703(b). (This is true even in this instance where a request for continued examination (RCE) was filed. The computer will not undertake the § 1.703(b) calculation until the actual date of issuance of the patent has been determined. Accordingly, it is still too soon to make a determination as to the correctness of any period of adjustment that will or will not be entered pursuant to § 1.703(b)).

Applicant is given **TWO (2) MONTHS** from the issue date of the patent to file a written request for reconsideration of the patent term adjustment for Office failure to issue the patent within three years. A copy of this decision should accompany the request. Applicant may seek such consideration without payment of an additional fee. However, as to all other bases for seeking reconsideration of the patent term adjustment indicated in the patent, all requirements of § 1.705(d) must be met. Requests for reconsideration on other bases must be timely filed and must include payment of the required fee.

Rather than file the request for reconsideration of Patent Term Adjustment at the time of the mailing of the notice of allowance, applicant is advised that they may wait until the time of the issuance of the patent and file a request for reconsideration of the patent term pursuant to 37 CFR 1.705(d). The USPTO notes that it does not calculate the amount of time earned pursuant to 37 CFR 1.702(b) until the time of the issuance of the patent and accordingly, the Office will consider any request for reconsideration of the patent term adjustment due to an error in the calculation of 37 CFR 1.702(b) to be timely if the request for reconsideration is filed within two months of the issuance of the patent.

It is acknowledged that applicant is correct that any period of adjustment will be entered in light of 35 U.S.C. 154(B) GUARANTEE OF NO MORE THAN 3-YEAR APPLICATION PENDENCY, which provides that:

> Subject to the limitations under paragraph (2), if the issue of an original patent is delayed due to the failure of the United States Patent and Trademark Office to issue a patent within 3 years after the actual filing date of the application in the United States, not including —
>
> (i) any time consumed by continued examination of the application requested by the applicant under section 132(b);

It is noted that a Request for Continued Examination (RCE) was filed in this application on September 4, 2008.

The Office will charge the Deposit Account for the $200.00 fee set forth in 37 CFR 1.18(e) as authorized. No additional fees are required.

The application is being forwarded to the Office of Data Management for issuance of the patent. The patent term adjustment indicated on the patent (as shown on the Issue Notification mailed about three weeks prior to patent issuance) will include any additional adjustment accrued both for Office delay in issuing the patent more than four months after payment of the issue fee and satisfaction of all outstanding requirements, and for the Office taking in excess of three years to issue the patent (to the extent that the three-year period does not overlap with periods already accorded).

Telephone inquiries specific to this decision should be directed to Senior Petitions Attorney, Christina Tartera Donnell, at (571) 272-3211.

Kery A Fries

Kery A. Fries
Senior Legal Advisor
Office Patent Legal Administration

UNITED STATES PATENT AND TRADEMARK OFFICE

Commissioner for Patents
United States Patent and Trademark Office
P.O. Box 1450
Alexandria, VA 22313-1450
www.uspto.gov

MORGAN & FINNEGAN Transition Team
C/O Locke Lord Bissell & Liddell
3 WORLD FINANCIAL CENTER
NEW YORK NY 10281-2101

COPY MAILED
JUL 22 2009
OFFICE OF PETITIONS

In re Patent No. 7,504,009	:	
OSARA et al.	:	DECISION DISMISSING
Issue Date: March 17, 2009	:	REQUEST FOR
Application No. 10/533,798	:	RECONSIDERATION
Filed: May 4, 2005	:	OF PATENT TERM ADJUSTMENT
Atty. Docket No. 4819-4743	:	

This is in response to the PETITION FOR RECONSIDERATION OF PATENT TERM ADJUSTMENT DETERMINATION UNDER 37 C.F.R. § 1.705(d) filed May 11, 2009. Patentees request that the determination of patent term adjustment be corrected from four hundred seventy-seven (477) days to six hundred (600) days.

The request for reconsideration of patent term adjustment is **DISMISSED** with respect to making any change in the patent term adjustment determination under 35 U.S.C. 154(b) of 477 days.

BACKGROUND

On March 17, 2009, the application matured into U.S. Patent No. 7,504,009, with a revised patent term adjustment of 477 days. On May 11, 2009, patentees timely submitted this request for reconsideration of patent term adjustment within two months of the issue date of the patent. See 37 CFR 1.705(d).

Patentees request recalculation of the patent term adjustment based on the decision in Wyeth v. Dudas, 580 F. Supp. 2d 138, 88 U.S.P.Q. 2d 1538 (D.D.C. 2008). Patentees aver that the correct number of days of patent term adjustment is 600 days under the court's interpretation of the overlap provision as set forth in Wyeth v. Dudas, 580 F. Supp. 2d 138, 88 U.S.P.Q. 2d 1538 (D.D.C. 2008). Patentees contend that pursuant to Wyeth, periods of

delay under 35 U.S.C. 154(b)(1)(A) and 35 U.S.C. 154(b)(1)(B) overlap only if they occur on the same calendar day(s). Patentees state that the total period of Office delay is the sum of 123 days of delay under 37 CFR 1.702(b) ("Three Year Delay")[1] and 506 days of delay under 37 CFR 1.702(a) ("examination delay") to the extent that these periods of delay are not overlapping. Patentees contend no periods of delay attributable to grounds specified under 35 U.S.C. 154(b)(1)(A) and 35 U.S.C. 154(b)(1)(B) overlap. Therefore, patentees assert that they are entitled to the sum of 506 (503+3) days of examination delay plus 123 days of Three Years Delay minus 29 days of applicant delay, for a total patent term adjustment of 600 days.

OPINION

Patentees' interpretation of the period of overlap has been considered, but has been found inconsistent with the Office's interpretation of the overlap provision, 35 U.S.C. 154(b)(2)(A). 35 U.S.C. 154(b)(2)(A) limits the adjustment of patent term, as follows:

> to the extent that the periods of delay attributable to grounds specified in paragraph (1) overlap, the period of any adjustment granted under this subsection shall not exceed the actual number of days the issuance of the patent was delayed.

---

[1] Pursuant to 35 U.S.C. 154(b)(1)(B), 37 CFR 1.702(b) provides, in pertinent part, that:

> Failure to issue a patent within three years of the actual filing date of the application. Subject to the provisions of 35 U.S.C. 154(b) and this subpart, the term of an original patent shall be adjusted if the issuance of the patent was delayed due to the failure of the Office to issue a patent within three years after the date on which the application was filed under 35 U.S.C. 111(a) or the national stage commenced under 35 U.S.C. 371(b) or (f) in an international application, but not including:
>
> (i) any time consumed by continued examination of the application requested by the applicant under section 132(b)[.]

As explained in *Explanation of 37 CFR 1.703(f)*[2] *and of the United States Patent and Trademark Office Interpretation of 35 U.S.C. 154(b)(2)(A)*, 69 Fed. Reg. 34283 (June 21, 2004), the Office interprets 35 U.S.C. 154(b)(2)(A) as permitting either patent term adjustment under 35 U.S.C. 154(b)(1)(A)(i)-(iv), or patent term adjustment under 35 U.S.C. 154(b)(1)(B), but not as permitting patent term adjustment under both 35 U.S.C. 154(b)(1)(A)(i)-(iv) and 154(b)(1)(B). Accordingly, the Office implements the overlap provision as follows:

> If an application is entitled to an adjustment under 35 U.S.C. 154(b)(1)(B), the entire period during which the application was pending (except for periods excluded under 35 U.S.C. 154(b)(1)(B)(i)-(iii)), and not just the period beginning three years after the actual filing date of the application, is the period of delay under 35 U.S.C. 154(b)(1)(B) in determining whether periods of delay overlap under 35 U.S.C. 154(b)(2)(A). Thus, any days of delay for Office issuance of the patent more than 3 years after the filing date of the application, which overlap with the days of patent term adjustment accorded prior to the issuance of the patent will not result in any additional patent term adjustment. See 35 U.S.C. 154(b)(1)(B), 35 U.S.C. 154(b)(2)(A), and 37 CFR § 1.703(f). See *Changes to Implement Patent Term Adjustment Under Twenty Year Term; Final Rule*, 65 Fed. Reg. 54366 (Sept. 18, 2000). See also *Revision of Patent Term Extension and Patent Term Adjustment Provisions; Final Rule*, 69 Fed. Reg. 21704 (April 22, 2004), 1282 Off. Gaz. Pat. Office 100 (May 18, 2004). See also *Explanation of 37 CFR 1.703(f) and of the United States Patent and Trademark Office Interpretation of 35 U.S.C. 154(b)(2)(A)*, 69 Fed. Reg. 34283 (June 21, 2004).

Further, as stated in the *Explanation of 37 CFR 1.703(f) and of the United States Patent and Trademark Office Interpretation of 35 U.S.C. 154(b)(2)(A)*, the Office has consistently taken the

---

[2] Likewise, 37 CFR 1.703(f) provides that:

> To the extent that periods of delay attributable to the grounds specified in § 1.702 overlap, the period of adjustment granted under this section shall not exceed the actual number of days the issuance of the patent was delayed.

position that if an application is entitled to an adjustment under the three-year pendency provision of 35 U.S.C. 154(b)(1)(B), the entire period during which the application was pending before the Office (except for periods excluded under 35 U.S.C. 154(b)(1)(B)(i)-(iii)), and not just the period beginning three years after the actual filing date of the application, is the relevant period under 35 U.S.C. 154(b)(1)(B) in determining whether periods of delay "overlap" under 35 U.S.C. 154(b)(2)(A).

This interpretation is consistent with the statute. Taken together the statute and rule provide that to the extent that periods of delay attributable to grounds specified in 35 U.S.C. 154(b)(1) and in corresponding 37 CFR 1.702 overlap, the period of adjustment granted shall not exceed the actual number of days the issuance of the patent was delayed.

It is noted, however, that delays resulting in the Office's failure to meet the time frames specified in 35 U.S.C. 154(b)(1)(A) (the "fourteen-four-four-four" provisions) are not always overlapping with a delay resulting in the Office's failure to issue a patent within the three-year time frame specified in 35 U.S.C. 154(b)(1)(B) because not all application pendency time is counted toward this three-year period. See 35 U.S.C. 154(b)(1)(B)(i)-(iii).

In this instance, all application pendency time is not counted toward the three-year period. A request for continued examination was filed on September 4, 2008. The period subsequent to the filing of the RCE is not included in the three-year time frame specified in 35 U.S.C. 154(b)(1)(B). See 35 U.S.C. 154(b)(1)(B)(i). Thus, the relevant period under 35 U.S.C. 154(b)(1)(B) in determining whether periods of delay "overlap" under 35 U.S.C. 154(b)(2)(A) is the period from May 4, 2005 to September 4, 2008. Thus, only the 503 days[3] of patent term adjustment accorded prior to the filing of the RCE pursuant to 37 CFR 1.702(a)(1)[4] are considered in determining overlap.

---

[3] A nonfinal Office action was mailed on November 19, 2007, 14 months and 503 days after the date on which the requirements under 35 U.S.C. 371 were fulfilled on July 4, 2006.

[4] 37 CFR 1.702, provides grounds for adjustment of patent term due to examination delay under the Patent Term Guarantee Act of 1999 (original applications, other than designs, filed on or after May 29, 2000).

The 3 days[5] for Office delay under 37 CFR 1.702(a)(4),[6] occurring subsequent to the filing of the RCE is not considered. The 123 days[7] attributed to Office delay pursuant to 37 CFR 1.702(b) is determined to overlap with the 503 days attributed to Office delay pursuant to 1.702(a)(1). 506 (503 + 3) days is the actual number of days issuance of the patent was delayed. Accordingly, at issuance, the Office properly entered no additional period of adjustment, having considered the 123 days of Office delay under the three-year pendency provision.

In view thereof, the Office affirms the revised determination of patent term adjustment at the time of the issuance of the patent is 477 days (506 (503 + 3) days of Office delay - 29 days of applicant delay).

> (a) Failure to take certain actions within specified time frames. Subject to the provisions of 35 U.S.C. 154(b) and this subpart, the term of an original patent shall be adjusted if the issuance of the patent was delayed due to the failure of the Office to:
>
> (1) Mail at least one of a notification under 35 U.S.C. 132 or a notice of allowance under 35 U.S.C. 151 not later than fourteen months after the date on which the application was filed under 35 U.S.C. 111(a) or fulfilled the requirements of 35 U.S.C. 371 in an international application[.]

[5] The Office issued the patent on March 17, 2009, 4 months and 3 days after the payment of the issue fee on November 14, 2008.

[6] 37 CFR 1.702, provides grounds for adjustment of patent term due to examination delay under the Patent Term Guarantee Act of 1999 (original applications, other than designs, filed on or after May 29, 2000).

> (a) Failure to take certain actions within specified time frames. Subject to the provisions of 35 U.S.C. 154(b) and this subpart, the term of an original patent shall be adjusted if the issuance of the patent was delayed due to the failure of the Office to:
>
> . . .
>
> (4) Issue a patent not later than four months after the date on which the issue fee was paid under 35 U.S.C. 151 and all outstanding requirements were satisfied.

[7] Pursuant to 37 CFR 1.703(b)(1), the period of adjustment of 123 days is calculated as the number of days in the period beginning on the day after the date that is three years after the date on which the national stage commenced under 35 U.S.C. 371(b) or (f), May 5, 2008, and ending on the filing date of the RCE, September 4, 2008.

The Office acknowledges the previous submission of the $200.00 fee set forth in 37 CFR 1.18(e) on November 14, 2008. No additional fees are required.

Telephone inquiries specific to this matter should be directed to the undersigned at (571) 272-3211.

Christina Tartera Donnell

Christina Tartera Donnell
Senior Petitions Attorney
Office of Petitions

UNITED STATES PATENT AND TRADEMARK OFFICE

COMMISSIONER FOR PATENTS
UNITED STATES PATENT AND TRADEMARK OFFICE
P.O. BOX 1450
ALEXANDRIA, VA 22313-1450
www.uspto.gov

MORGAN & FINNEGAN Transition Team
C/O Locke Lord Bissell & Liddell
3 WORLD FINANCIAL CENTER
NEW YORK NY 10281-2101

COPY MAILED
MAR 10 2010

In re Patent No. 7,504,009	:	DECISION ON REQUEST FOR
OSARA et al.	:	RECONSIDERATION OF
Issue Date: March 17, 2009	:	PATENT TERM ADJUSTMENT AND
Application No. 10/533,798	:	NOTICE OF INTENT TO ISSUE
Filed: May 4, 2005	:	CERTIFICATE OF CORRECTION
Attorney Docket No. 4819-4743	:	

This is a decision on the petition filed on September 22, 2009, which is being treated as a petition under 37 CFR 1.705(d) requesting that the patent term adjustment indicated on the above-identified patent be corrected to indicate that the term of the above-identified patent is extended or adjusted by six hundred (600) days.

The petition to correct the patent term adjustment indicated on the above-identified patent is **GRANTED to the extent** that the term of the above-identified patent is extended or adjusted by five hundred ninety-nine (599) days.

As the period from the filing date of the request for continued examination (RCE) to the issue date of the patent is not included in the "B" delay period, the over three year period begins on May 5, 2008, and ends on September 3, 2008, the day before the RCE was filed, and is 122 (not 123) days. See 35 U.S.C. 154(b)(1)(B)(i). As such, the patent term adjustment is 599, not 600 days.

The Office will *sua sponte* issue a certificate of correction. Pursuant to 37 CFR 1.322, the Office will not issue a certificate of correction without first providing assignee or patentee an opportunity to be heard. Accordingly, patentee is given **one (1) month or thirty (30) days**, whichever is longer, from the mail date of this decision to respond. No extensions of time will be granted under § 1.136.

The Office acknowledges the submission of the $200.00 fee set forth in 37 CFR 1.18(e). No additional fees are required.

This matter is being referred to the Certificates of Correction Branch for issuance of a certificate of correction. The Office will issue a certificate of correction indicating that the term of the above-identified patent is extended or adjusted by **five hundred ninety-nine (599) days.**

Telephone inquiries specific to this matter should be directed to the undersigned at (571) 272-3211.

Christina Tartera Donnell

Christina Tartera Donnell
Senior Petitions Attorney
Office of Petitions

Enclosure: Copy of DRAFT Certificate of Correction

UNITED STATES PATENT AND TRADEMARK OFFICE

CERTIFICATE OF CORRECTION

PATENT : 7,504,009 B2

DATED : Mar. 17, 2009 **DRAFT**

INVENTOR(S) : Osara et al.

It is certified that error appears in the above-identified patent and that said Letters Patent is hereby corrected as shown below:

On the cover page,

[*] Notice: Subject to any disclaimer, the term of this patent is extended or adjusted under 35 USC 154(b) by 477 days

Delete the phrase "by 477 days" and insert – by 599 days--

UNITED STATES PATENT AND TRADEMARK OFFICE

Commissioner for Patents
United States Patent and Trademark Office
P.O. Box 1450
Alexandria, VA 22313-1450
www.uspto.gov

HELLER EHRMAN LLP
4350 LA JOLLA VILLAGE DRIVE, 7TH FLOOR
SAN DIEGO, CA 92122

COPY MAILED

OCT 01 2008

OFFICE OF PETITIONS

In re Application of

MANKELOW, Tosti Jon et al.
Application No. 10/533,817
Filed: August 30, 2005
Attorney Docket No.

DECISION ON PETITION
TO WITHDRAW
FROM RECORD

This is a decision on the Request to Withdraw as attorney or agent of record under 37 C.F.R. § 1.36(b), filed July 17, 2008.

The request is **APPROVED**.

A grantable request to withdraw as attorney/agent of record must be signed by every attorney/agent seeking to withdraw or contain a clear indication that one attorney is signing on behalf of another/others. The Office requires the practitioner(s) requesting withdrawal to certify that he, she, or they have: (1) given reasonable notice to the client, prior to the expiration of the response period, that the practitioner(s) intends to withdraw from employment; (2) delivered to the client or a duly authorized representative of the client all papers and property (including funds) to which the client is entitled; and (3) notified the client of any responses that may be due and the time frame within which the client must respond, pursuant 37 CFR 10.40(c).

The request was signed by Leslie B. Overman on behalf of all attorneys of record who are associated with customer No. 26633. All attorneys/agents associated have been withdrawn. Applicant is reminded that there is no attorney of record at this time.

The request to change the correspondence of record is not acceptable as the requested correspondence address is not that of: (1) the first named signing inventor; or (2) an intervening assignee of the entire interest under 37 C.F.R 3.71. All future communications from the Office will be directed to the first named signing inventor.

There is an outstanding Office action mailed July 11, 2008 that requires a reply from the applicant.

Telephone inquiries concerning this decision should be directed to Michelle R. Eason at 571-272-4231.

Michelle R. Eason
Paralegal Specialist
Office of Petitions

cc: **TOSTI JON MANKELOW**
25 THE MEADS, DOWNEND
BRISTOL BS16 6RG
UNITED KINGDOM

cc: **PROSKAUER ROSE LLP**
1001 PENNSYLVANIA AVE, N.W.
SUITE 400 SOUTH
WASHINGTON, DC 20004

14 MAR 2006

#5

UNITED STATES PATENT AND TRADEMARK OFFICE

Commissioner for Patents
United States Patent and Trademark Office
P.O. Box 1450
Alexandria, VA 22313-1450
www.uspto.gov

VOLPE AND KOENIG, P.C.
United Plaza, Suite 1600
30 South 17th Street
Philadelphia, PA 19103

In re Application of	:	
AUSTRENG, Erland *et al*	:	
U.S. Application No.: 10/533,825	:	
PCT No.: PCT/NO03/00376	:	**DECISION ON**
Int. Filing Date: 07 November 2003	:	**PAPERS FILED**
Priority Date: 08 November 2002	:	**UNDER 37 CFR 1.42**
Attorney Docket No.: ZNA-PT014	:	
For: LIGHTING BOX	:	

This is a decision on the declaration filed on 21 December 2005 which has been treated as a petition under 37 CFR 1.42. No fee is required.

BACKGROUND

On 08 December 2005, the United States Designated/Elected Office (DO/EO/US) mailed a Notification of Missing Requirements under 35 U.S.C. 371 (Form PCT/DO/EO/905) indicating that an oath/declaration in compliance with 37 CFR 1.497(a) and (b) and a surcharge fee must be provided. Applicants were given two months to respond.

On 21 December 2005, applicants submitted the required surcharge fee and a declaration signed by the legal representative of the deceased sole inventor.

DISCUSSION

37 CFR 1.42 *When the Inventor is Dead*, states, in part:

> In case of the death of the inventor, the legal representative (executor, administrator, etc.) of the deceased inventor may make the necessary oath or declaration, and apply for and obtain the patent.

Applicants submitted a declaration executed by two of the three named co-inventors and the legal representative of the deceased inventor. The citizenship, residence and address information for all inventors (including the information for the deceased inventor on the supplemental declaration) is listed pursuant to 37 CFR 1.497(a)(3) and 37 CFR 1.63(c)(1).

In addition, the citizenship, residence and address of the legal representative is recorded on the supplemental declaration pursuant to 37 CFR 1.497(b)(2).

CONCLUSION

The papers filed under 37 CFR 1.42 are **ACCEPTED**.

Applicants have completed the requirements for acceptance under 35 U.S.C. 371(c). The application has an international filing date of 07 November 2003, under 35 U.S.C. 363 and a 35 U.S.C. 371(c)(1), (c)(2) and (c)(4) date of 21 December 2005.

This application is being forwarded to the National Stage Processing Division of the Office of PCT Operations for continued processing.

James Thomson

James Thomson
Attorney Advisor
Office of PCT Legal Administration

Tel.: (571) 272-3302

UNITED STATES PATENT AND TRADEMARK OFFICE

UNITED STATES DEPARTMENT OF COMMERCE
United States Patent and Trademark Office
Address: COMMISSIONER FOR PATENTS
P.O. Box 1450
Alexandria, Virginia 22313-1450
www.uspto.gov

SNELL & WILMER L.L.P. (Panasonic)
600 ANTON BOULEVARD
SUITE 1400
COSTA MESA, CA 92626

Mail Date: 04/21/2010

Applicant	: Shinichiro Hashimoto	: DECISION ON REQUEST FOR
Patent Number	: 7589696	: RECALCULATION of PATENT
Issue Date	: 09/15/2009	: TERM ADJUSTMENT IN VIEW
Appliction No	: 10/533,840	: OF WYETH AND NOTICE OF INTENT TO
Filed	: 05/04/2005	: ISSUE CERTIFICATE OF CORRECTION
		:

The Request for Recalculation is **GRANTED** to the extent indicated.

The patent term adjustment has been determined to be **1111** days. The USPTO will *sua sponte* issue a certificate of correction reflecting the amount of PTA days determined by the recalculation.

Prior to the issuance of the certificate of correction, the USPTO will afford patentee an opportunity to be heard and request reconsideration. Accordingly, patentee has **one month or thirty (30) days**, whichever is longer, to file a request for reconsideration of this patent term adjustment calculation. See 35 U.S.C. 154(b)(3)(B)(ii) and 37 CFR 1.322(a)(4). No extensions of time will be granted under 37 CFR 1.136.

Patentee should use document code PET.OP if electronically filing a request for reconsideration of this patent term adjustment calculation. The patentee must also include the information required by 37 CFR 1.705(b)(2) and the fee required by 37 CFR 1.18(e). If patentee does not file a timely request for reconsideration of this patent term adjustment calculation including the information required by 37 CFR 1.705(b)(2) and the fee required by 37 CFR 1.18(e), the USPTO will issue a certificate of correction reflecting the PTA determination noted above.

Patentee should be aware that in order to preserve the right to review in the United States District Court for the District of Columbia of the USPTO patent term adjustment determination, patentee must ensure that he or she also take the steps required under 35 U.S.C. 154(b)(4)(A) in a timely manner. Nothing in the request for recalculation should be construed as providing an alternative time frame for commencing a civil action under 35 U.S.C. 154(b)(4)(A).

Any questions concerning this decision should be directed to the Office of Patent Legal Administration at 571-272-7702.

UNITED STATES PATENT AND TRADEMARK OFFICE

Commissioner for Patents
United States Patent and Trademark Office
P.O. Box 1450
Alexandria, VA 22313-1450
www.uspto.gov

COPY MAILED

SEP 30 2009

OFFICE OF PETITIONS

FISH & RICHARDSON P.C.
P.O BOX 1022
Minneapolis MN 55440-1022

In re Application of Jacques BEAURAIN et al. Application No. 10/533,846 Filed: November 11, 2005 Attorney Docket No. LDR/10/US - 21249.014US1	: : : : :	DECISION ON PETITION

This is a decision on the petition under the unintentional provisions of 37 CFR 1.137(b), filed June 25, 2009, to revive the above-identified application.

The petition is **GRANTED**.

The application became abandoned for failure to timely reply within the meaning of 37 CFR 1.113 to the final Office action, mailed October 15, 2008, which set a shortened statutory period for reply of three (3) months. A three (3) month extension of time under the provisions of 37 CFR 1.136(a) was obtained. Accordingly, the application became abandoned on April 16, 2009.

The petition satisfies the conditions for revival pursuant to the provisions of 37 CFR 1.137(b) in that (1) the reply in the form of an amendment (2) the petition fee of $810.00 and (3) the required statement of unintentional delay have been received. Accordingly, the reply to the final Office action of October 15, 2008 has been accepted as having been unintentionally delayed.

It is not apparent whether the person signing the statement of unintentional delay was in a position to have firsthand or direct knowledge of the facts and circumstances of the delay at issue. Nevertheless, such statement is being treated as having been made as the result of a reasonable inquiry into the facts and circumstances of such delay. See 37 CFR 10.18(b) and Changes to Patent Practice and Procedure; Final Rule Notice, 62 Fed. Reg. 53131, 53178 (October 10, 1997), 1203 Off. Gaz. Pat. Office 63, 103 (October 21, 1997). In the event that such an inquiry has not been made, petitioner must make such an inquiry. If such inquiry results in the discovery that it is not correct that the entire delay in filing the required reply from the due

date for the reply until the filing of a grantable petition pursuant to 37 CFR 1.137(b) was unintentional, petitioner must notify the Office.

Telephone inquiries concerning this decision should be directed to the undersigned at (571) 272-4231.

The application is being referred to the Technology Center AU 3775 for appropriate action on the concurrently filed amendment.

Michelle R. Eason
Paralegal Specialist
Office of Petitions

cc: **STEVE LAUFF**
FISH & RICHARDSON P.C.
ONE CONGRESS PLAZA, SUITE 810
111 CONGRESS AVENUE
AUSTIN, TX 78701

17 MAR 2006

#6

UNITED STATES PATENT AND TRADEMARK OFFICE

COMMISSIONER FOR PATENTS
UNITED STATES PATENT AND TRADEMARK OFFICE
P.O. BOX 1450
ALEXANDRIA, VA 22313-1450
www.uspto.gov

OSHA LIANG L.L.P.
1221 MCKINNEY STREET
SUITE 2800
HOUSTON, TX 77010

In re Application of BOUILLOUX-LAFONT et al	:	
U.S. Application No.: 10/533,848	:	
PCT Application No.: PCT/EP02/50787	:	
Int. Filing Date: 04 November 2003	:	DECISION
Priority Date Claimed: 05 November 2002	:	
Attorney Docket No.: 11345/063001	:	
For: SELECTING ADVERTISEMENT ON A SET	:	
TOP BOX IN A TELEVISION NETWORK	:	

This is in response to applicant's "Petition Under 37 CFR § 1.47(a)" filed 25 January 2006.

BACKGROUND

On 04 November 2003, applicant filed international application PCT/EP02/50787, which claimed priority of an earlier European Patent Office application filed 05 November 2002. A copy of the international application was communicated to the USPTO from the International Bureau on 21 May 2004. The thirty-month period for paying the basic national fee in the United States expired on 05 May 2005.

On 04 May 2005, applicant filed national stage papers in the United States Designated/Elected Office (DO/EO/US). The submission was accompanied by, *inter alia*, the basic national fee required by 35 U.S.C. 371(c)(1).

On 28 September 2005, the DO/EO/US mailed a Notification of Missing Requirements Under 35 U.S.C. 371 (Form PCT/DO/EO/905), which indicated that an oath or declaration in compliance with 37 CFR 1.497 must be filed.

On 25 January 2006, applicant filed the present petition under 37 CFR 1.47(a).

DISCUSSION

A petition under 37 CFR 1.47(a) must be accompanied by: (1) an oath or declaration by each applicant on his or her own behalf and on behalf of the nonsigning joint inventors, (2) factual proof that the missing joint inventors refuse to join in the application or cannot be reached after diligent effort, (3) the fee set forth in §1.17(i), and (4) the last known addresses of the nonsigning joint inventors.

With regard to item (1) above, applicant has submitted a declaration signed by the available inventor on his own behalf and on behalf of the nonsigning inventors.

With regard to item (2) above, MPEP 409.03(d) states in relevant part,

> Where inability to find or reach a nonsigning inventor "after diligent effort" is the reason for filing under 37 CFR 1.47, an affidavit or declaration of facts should be submitted which fully describes the exact facts which are relied on to establish that a diligent effort was made. . . . The affidavit or declaration of facts must be signed, where at all possible, by a person having firsthand knowledge of the facts recited therein. Statements based on hearsay will not normally be accepted. Copies of documentary evidence such as certified mail return receipt, cover letter of instructions, telegrams, etc., that support a finding that the nonsigning inventor could not be found or reached should be made part of the affidavit or declaration. It is important that the affidavit or declaration contain statements of fact as opposed to conclusions.

The petition states that joint inventors Helene Bouilloux-Lafont, Franck Bachet, and Axel Taldir cannot be reached. However, the petition does not sufficiently demonstrate that a diligent attempt was made to find the inventors. The affidavit of Isabelle Thibaudeau states that two attempts were made to contact the inventors by postal mail. However, the petition does not contain evidence of any other efforts to locate the inventors, e.g. by telephone, facsimile, electronic mail, or through the inventors' former employer and co-workers. Furthermore, although Ms. Thibaudeau's affidavit states that she has not received any forwarding or contact information, the affidavit fails to describe the affirmative steps taken by the affiant to secure such information.

With regard to item (3) above, the requisite $200.00 petition fee will be charged to Deposit Account No. 50-0591 as authorized in the petition.

With regard to item (4) above, the petition states the last known addresses of the nonsigning inventors.

CONCLUSION

For the reasons above, the petition under 37 CFR 1.47(a) is DISMISSED without prejudice.

If reconsideration on the merits of this petition is desired, a proper response must be filed within TWO (2) MONTHS from the mail date of this decision. Extensions of time are available under 37 CFR 1.136(a). Any reconsideration request should include a cover letter entitled "Renewed Petition Under 37 CFR 1.47(a)". No additional petition fee is required.

Please direct further correspondence with respect to this matter to Mail Stop PCT, Commissioner for Patents, Office of PCT Legal Administration, P.O. Box 1450, Alexandria, Virginia 22313-1450, with the contents of the letter marked to the attention of the Office of PCT Legal Administration.

Bryan Tung
PCT Legal Examiner
PCT Legal Office

Telephone: 571-272-3303
Facsimile: 571-273-0459

#8

UNITED STATES PATENT AND TRADEMARK OFFICE

COMMISSIONER FOR PATENTS
UNITED STATES PATENT AND TRADEMARK OFFICE
P.O. BOX 1450
ALEXANDRIA, VA 22313-1450
www.uspto.gov

17 OCT 2006

OSHA LIANG L.L.P.
1221 MCKINNEY STREET
SUITE 2800
HOUSTON, TX 77010

In re Application of BOUILLOUX-LAFONT et al	:	
U.S. Application No.: 10/533,848	:	
PCT Application No.: PCT/EP02/50787	:	
Int. Filing Date: 04 November 2003	:	DECISION
Priority Date Claimed: 05 November 2002	:	
Attorney Docket No.: 11345/063001	:	
For: SELECTING ADVERTISEMENT ON A SET TOP BOX IN A TELEVISION NETWORK	:	

This is in response to applicant's "Renewed Petition Under 37 CFR § 1.47(a)" filed 16 June 2006.

BACKGROUND

On 04 November 2003, applicant filed international application PCT/EP02/50787, which claimed priority of an earlier European Patent Office application filed 05 November 2002. A copy of the international application was communicated to the USPTO from the International Bureau on 21 May 2004. The thirty-month period for paying the basic national fee in the United States expired on 05 May 2005.

On 04 May 2005, applicant filed national stage papers in the United States Designated/Elected Office (DO/EO/US). The submission was accompanied by, *inter alia*, the basic national fee required by 35 U.S.C. 371(c)(1).

On 28 September 2005, the DO/EO/US mailed a Notification of Missing Requirements Under 35 U.S.C. 371 (Form PCT/DO/EO/905), which indicated that an oath or declaration in compliance with 37 CFR 1.497 must be filed.

On 25 January 2006, applicant filed a petition under 37 CFR 1.47(a).

On 17 March 2006, this Office mailed a decision dismissing the 25 January 2006 petition.

On 16 June 2006, applicant filed the present renewed petition under 37 CFR 1.47(a).

DISCUSSION

A petition under 37 CFR 1.47(a) must be accompanied by: (1) an oath or declaration by each applicant on his or her own behalf and on behalf of the nonsigning joint inventors, (2) factual proof that the missing joint inventors refuse to join in the application or cannot be reached after diligent effort, (3) the fee set forth in §1.17(i), and (4) the last known addresses of the nonsigning joint inventors.

Petitioner has previously satisfied items (1), (3), and (4) above.

With regard to item (2) above, MPEP 409.03(d) states in relevant part,

> Where inability to find or reach a nonsigning inventor "after diligent effort" is the reason for filing under 37 CFR 1.47, an affidavit or declaration of facts should be submitted which fully describes the exact facts which are relied on to establish that a diligent effort was made. . . . The affidavit or declaration of facts must be signed, where at all possible, by a person having firsthand knowledge of the facts recited therein. Statements based on hearsay will not normally be accepted. Copies of documentary evidence such as certified mail return receipt, cover letter of instructions, telegrams, etc., that support a finding that the nonsigning inventor could not be found or reached should be made part of the affidavit or declaration. It is important that the affidavit or declaration contain statements of fact as opposed to conclusions.

The petition states that joint inventors Helene Bouilloux-Lafont, Franck Bachet, and Axel Taldir cannot be reached. The petition sufficiently demonstrates that a diligent attempt was made to find the inventors. Two attempts were made to contact the inventors by postal mail (see affidavit of Isabelle Thibaudeau). Furthermore, petitioner unsuccessfully attempted to reach the inventors through their employer (see affidavit of Frederique Dersoir). Thus, it can be concluded with reasonable certainty that inventors Bouilloux-Lafont, Bachet, and Taldir cannot be reached.

CONCLUSION

For the reasons above, the renewed petition under 37 CFR 1.47(a) is GRANTED.

The application has an International Filing Date under 35 U.S.C. 363 of 04 November 2003, and a date under 35 U.S.C. 371(c)(1), (c)(2), and (c)(4) of 25 January 2006.

As set forth in 37 CFR 1.47(a), a notice of the filing of this application will be forwarded to the nonsigning inventors at the last known addresses of record and will be published in the *Official Gazette*.

This application is being forwarded to the United States Designated/Elected Office (DO/EO/US) for further processing in accordance with this decision.

BryanLin

Bryan Lin
PCT Legal Examiner
PCT Legal Office

Telephone: 571-272-3303
Facsimile: 571-273-0459

UNITED STATES PATENT AND TRADEMARK OFFICE

COMMISSIONER FOR PATENTS
UNITED STATES PATENT AND TRADEMARK OFFICE
P.O. BOX 1450
ALEXANDRIA, VA 22313-1450
www.uspto.gov

17 OCT 2006

Axel Taldir
31 rue Chateaubriand
91600 Savigny Sur Orge
France

In re Application of BOUILLOUX-LAFONT et al
U.S. Application No.: 10/533,848
PCT Application No.: PCT/EP02/50787
Int. Filing Date: 04 November 2003
Priority Date Claimed: 05 November 2002
For: SELECTING ADVERTISEMENT ON A SET TOP BOX IN A TELEVISION NETWORK

Dear Axel Taldir:

You are named as a joint inventor in the above-captioned United States national stage application, filed under the provisions of 37 CFR 1.47(a) and 35 U.S.C. 116. Should a patent be granted, you will be designated as an inventor.

As a named inventor, you are entitled to inspect any paper in the file wrapper of the application, order copies of all or any part thereof (at a prepaid cost set forth in 37 CFR 1.19) or to make your position of record in the application. Alternatively, you may arrange to do any of the preceding through a registered patent agent or attorney presenting written authorization from you. If you choose to join in the application, counsel of record (see below) would presumably assist you. Joining in the application would entail the filing of an appropriate oath or declaration by you pursuant to 37 CFR 1.63.

Bryan Lin

Bryan Lin
PCT Legal Examiner
PCT Legal Office
Telephone: 571-272-3303
Facsimile: 571-273-0459

OSHA LIANG L.L.P.
1221 MCKINNEY STREET
SUITE 2800
HOUSTON, TX 77010
Attorney Docket No.: 11345/063001

UNITED STATES PATENT AND TRADEMARK OFFICE

COMMISSIONER FOR PATENTS
UNITED STATES PATENT AND TRADEMARK OFFICE
P.O. BOX 1450
ALEXANDRIA, VA 22313-1450
www.uspto.gov

17 OCT 2006

Franck Bachet
60 rue du Hamel
78550 Houdan
France

In re Application of BOUILLOUX-LAFONT et al
U.S. Application No.: 10/533,848
PCT Application No.: PCT/EP02/50787
Int. Filing Date: 04 November 2003
Priority Date Claimed: 05 November 2002
For: SELECTING ADVERTISEMENT ON A SET TOP BOX IN A TELEVISION NETWORK

Dear Franck Bachet:

You are named as a joint inventor in the above-captioned United States national stage application, filed under the provisions of 37 CFR 1.47(a) and 35 U.S.C. 116. Should a patent be granted, you will be designated as an inventor.

As a named inventor, you are entitled to inspect any paper in the file wrapper of the application, order copies of all or any part thereof (at a prepaid cost set forth in 37 CFR 1.19) or to make your position of record in the application. Alternatively, you may arrange to do any of the preceding through a registered patent agent or attorney presenting written authorization from you. If you choose to join in the application, counsel of record (see below) would presumably assist you. Joining in the application would entail the filing of an appropriate oath or declaration by you pursuant to 37 CFR 1.63.

Bryan Lin

Bryan Lin
PCT Legal Examiner
PCT Legal Office
Telephone: 571-272-3303
Facsimile: 571-273-0459

OSHA LIANG L.L.P.
1221 MCKINNEY STREET
SUITE 2800
HOUSTON, TX 77010
Attorney Docket No.: 11345/063001

UNITED STATES PATENT AND TRADEMARK OFFICE

COMMISSIONER FOR PATENTS
UNITED STATES PATENT AND TRADEMARK OFFICE
P.O. BOX 1450
ALEXANDRIA, VA 22313-1450
www.uspto.gov

17 OCT 2006

Helene Bouilloux-Lafont
22 Rue du General Lederc
92130 Issy les Moulineaux
France

In re Application of BOUILLOUX-LAFONT et al
U.S. Application No.: 10/533,848
PCT Application No.: PCT/EP02/50787
Int. Filing Date: 04 November 2003
Priority Date Claimed: 05 November 2002
For: SELECTING ADVERTISEMENT ON A SET TOP BOX IN A TELEVISION NETWORK

Dear Helene Bouilloux-Lafont:

You are named as a joint inventor in the above-captioned United States national stage application, filed under the provisions of 37 CFR 1.47(a) and 35 U.S.C. 116. Should a patent be granted, you will be designated as an inventor.

As a named inventor, you are entitled to inspect any paper in the file wrapper of the application, order copies of all or any part thereof (at a prepaid cost set forth in 37 CFR 1.19) or to make your position of record in the application. Alternatively, you may arrange to do any of the preceding through a registered patent agent or attorney presenting written authorization from you. If you choose to join in the application, counsel of record (see below) would presumably assist you. Joining in the application would entail the filing of an appropriate oath or declaration by you pursuant to 37 CFR 1.63.

Bryan Lin

Bryan Lin
PCT Legal Examiner
PCT Legal Office
Telephone: 571-272-3303
Facsimile: 571-273-0459

OSHA LIANG L.L.P.
1221 MCKINNEY STREET
SUITE 2800
HOUSTON, TX 77010
Attorney Docket No.: 11345/063001

UNITED STATES PATENT AND TRADEMARK OFFICE

UNITED STATES DEPARTMENT OF COMMERCE
United States Patent and Trademark Office
Address: COMMISSIONER FOR PATENTS
P.O. Box 1450
Alexandria, Virginia 22313-1450
www.uspto.gov

OSHA LIANG L.L.P.
TWO HOUSTON CENTER
909 FANNIN, SUITE 3500
HOUSTON, TX 77010

Mail Date: 04/20/2010

Applicant	: Helene Bouilloux-Lafont	: DECISION ON REQUEST FOR
Patent Number	: 7640562	: RECALCULATION of PATENT
Issue Date	: 12/29/2009	: TERM ADJUSTMENT IN VIEW
Appliction No	: 10/533,848	: OF WYETH AND NOTICE OF INTENT TO
Filed	: 01/25/2006	: ISSUE CERTIFICATE OF CORRECTION
		:

The Request for Recalculation is **GRANTED** to the extent indicated.

The patent term adjustment has been determined to be **639** days. The USPTO will *sua sponte* issue a certificate of correction reflecting the amount of PTA days determined by the recalculation.

Prior to the issuance of the certificate of correction, the USPTO will afford patentee an opportunity to be heard and request reconsideration. Accordingly, patentee has **one month or thirty (30) days**, whichever is longer, to file a request for reconsideration of this patent term adjustment calculation. See 35 U.S.C. 154(b)(3)(B)(ii) and 37 CFR 1.322(a)(4). No extensions of time will be granted under 37 CFR 1.136.

Patentee should use document code PET.OP if electronically filing a request for reconsideration of this patent term adjustment calculation. The patentee must also include the information required by 37 CFR 1.705(b)(2) and the fee required by 37 CFR 1.18(e). If patentee does not file a timely request for reconsideration of this patent term adjustment calculation including the information required by 37 CFR 1.705(b)(2) and the fee required by 37 CFR 1.18(e), the USPTO will issue a certificate of correction reflecting the PTA determination noted above.

Patentee should be aware that in order to preserve the right to review in the United States District Court for the District of Columbia of the USPTO patent term adjustment determination, patentee must ensure that he or she also take the steps required under 35 U.S.C. 154(b)(4)(A) in a timely manner. Nothing in the request for recalculation should be construed as providing an alternative time frame for commencing a civil action under 35 U.S.C. 154(b)(4)(A).

Any questions concerning this decision should be directed to the Office of Patent Legal Administration at 571-272-7702.

UNITED STATES PATENT AND TRADEMARK OFFICE

UNITED STATES DEPARTMENT OF COMMERCE
United States Patent and Trademark Office
Address: COMMISSIONER FOR PATENTS
P.O. Box 1450
Alexandria, Virginia 22313-1450
www.uspto.gov

HOWARD & HOWARD ATTORNEYS PLLC
450 West Fourth Street
Royal Oak, MI 48067

Mail Date: 04/21/2010

Applicant	: Hiroshi Fukui	: DECISION ON REQUEST FOR
Patent Number	: 7592383	: RECALCULATION of PATENT
Issue Date	: 09/22/2009	: TERM ADJUSTMENT IN VIEW
Appliction No	: 10/533,849	: OF WYETH AND NOTICE OF INTENT TO
Filed	: 10/24/2005	: ISSUE CERTIFICATE OF CORRECTION
		:

The Request for Recalculation is **GRANTED** to the extent indicated.

The patent term adjustment has been determined to be **541** days. The USPTO will *sua sponte* issue a certificate of correction reflecting the amount of PTA days determined by the recalculation.

Prior to the issuance of the certificate of correction, the USPTO will afford patentee an opportunity to be heard and request reconsideration. Accordingly, patentee has **one month or thirty (30) days**, whichever is longer, to file a request for reconsideration of this patent term adjustment calculation. See 35 U.S.C. 154(b)(3)(B)(ii) and 37 CFR 1.322(a)(4). No extensions of time will be granted under 37 CFR 1.136.

Patentee should use document code PET.OP if electronically filing a request for reconsideration of this patent term adjustment calculation. The patentee must also include the information required by 37 CFR 1.705(b)(2) and the fee required by 37 CFR 1.18(e). If patentee does not file a timely request for reconsideration of this patent term adjustment calculation including the information required by 37 CFR 1.705(b)(2) and the fee required by 37 CFR 1.18(e), the USPTO will issue a certificate of correction reflecting the PTA determination noted above.

Patentee should be aware that in order to preserve the right to review in the United States District Court for the District of Columbia of the USPTO patent term adjustment determination, patentee must ensure that he or she also take the steps required under 35 U.S.C. 154(b)(4)(A) in a timely manner. Nothing in the request for recalculation should be construed as providing an alternative time frame for commencing a civil action under 35 U.S.C. 154(b)(4)(A).

Any questions concerning this decision should be directed to the Office of Patent Legal Administration at 571-272-7702.

28 JUN 2006

UNITED STATES PATENT AND TRADEMARK OFFICE

Commissioner for Patents
United States Patent and Trademark Office
Washington, D.C. 20231
www.uspto.gov

Pearne & Gordon, LLP
1801 East 9th Street
Suite 1200
Cleveland, Ohio 44114-3108

In re Application of	:	
KURIAN, et al.	:	DECISION ON PETITION
Serial No.: 10/533,872	:	
PCT No.: PCT/CA03/01686	:	UNDER 37 CFR 1.47(a)
Int. Filing Date: 03 November 2003	:	
Priority Date: 05 November 2002	:	
Atty Docket No.: 38248	:	
For: INTELLIGENT DATA MANAGEMENT	:	
SYSTEM AND METHOD	:	

This decision is issued in response to applicant's "Petition under Rule 37 CFR 1.47(a)" filed 09 February 2006 to accept the application without the signatures of joint inventor, Homayoun Najjaran.

BACKGROUND

On 03 November 2003, applicant filed international application PCT/CA03/01686 which claimed priority to a previous application filed 05 November 2002. Pursuant to 37 CFR 1.495, the deadline for payment of the basic national fee in the United States was to expire 30 months from the priority date, 05 May 2005.

On 05 May 2005, applicant filed a transmittal letter for entry into the national stage in the United States, which was accompanied by the requisite basic national fee as required by 35 U.S.C. 371(c)(1); a copy of the international application; a preliminary amendment; and an Information Disclosure Statement.

On 06 October 2005, applicant was mailed a "Notification of Missing Requirements under 35 U.S.C. 371" (Form PCT/DO/EO/905) informing applicant of the need to provide an oath or declaration of the inventors, in compliance with 37 CFR 1.497(a) and (b), identifying the application by the International application number and international filing date. Applicant was afforded two months to file the proper reply and informed that this period could be extended pursuant to 37 CFR 1.136(a).

On 09 February 2006, applicant filed the present petition under 37 CFR 1.47(a) to accept the application without the signature of joint inventor Homayoun Najjaran.

DISCUSSION

A petition under 37 CFR 1.47(a) must be accompanied by (1) the fee under 37 CFR 1.17(g), (2) factual proof that the missing joint investor refuses to execute the application or cannot be reached after diligent effort, (3) a statement of the last known address of the missing inventor, and (4) an oath or declaration by each 37 CFR 1.47(a) applicant on his or her own behalf and on behalf of the non-signing joint inventor. Applicant has satisfied items (1), (3) and (4).

Regarding item (2) above, petitioner states that Homayoun Najjaran has refused to sign the application. Section 409.03(d) of the MPEP, **Proof of Unavailability or Refusal**, states, in part:

> Where a refusal of the inventor to sign the application papers is alleged, the circumstances of the presentation of the application papers and of the refusal must be specified in a statement of facts by the person who presented the inventor with the application papers and/or to whom the refusal was made. Statements by a party not present when an oral refusal is made will not be accepted.
>
> Proof that a bona fide attempt was made to present a copy of the application papers (specification, including claims, drawings, and oath or declaration) to the nonsigning inventor for signature, but the inventor refused to accept delivery of the papers or expressly stated that the application papers should not be sent, may be sufficient. When there is an express oral refusal, that fact along with the time and place of the refusal must be stated in the statement of facts. When there is an express written refusal, a copy of the document evidencing that refusal must be made part of the statement of facts. The document may be redacted to remove material not related to the inventor's reasons for refusal.
>
> When it is concluded by the 37 CFR 1.47 applicant that a nonsigning inventor's conduct constitutes a refusal, all facts upon which that conclusion is based should be stated in the statement of facts in support of the petition or directly in the petition. If there is documentary evidence to support facts alleged in the petition or in any statement of facts, such evidence should be submitted. Whenever a nonsigning inventor gives a reason for refusing to sign the application oath or declaration, that reason should be stated in the petition.

A review of the present petition reveals that applicant has not satisfied item (2) above, in that the applicant has not shown that a bona fide attempt was made to present the application papers, including the specification, claims, drawings, and oath/declaration to Homayoun Najjaran. The declaration of John Harris states that he mailed a copy of the application to Homayoun Najjaran on 12 November 2005. These papers were subsequently returned to sender. However, petitioner fails to include evidence to demonstrate that the materials were actually received by the nonsigning inventor at his last known address.

Where the Office is being asked to accept the silence of the nonsigning inventor as evidence of a refusal to sign, petitioner must provide some evidence that the application materials have been received by the nonsigning applicant.

As stated above, where a refusal of the inventor to sign the application papers is alleged, a statement of facts is needed from a person having first hand knowledge of the facts that a complete copy of the application papers (specification, claims, and drawings) were sent to Homayoun Najjaran, and when such papers were sent. In addition, copies of documentary evidence such as a certified mail return receipt, cover letter of instruction, telegrams, etc., should be supplied with the declaration.

CONCLUSION

For the reasons stated above, applicant's petition under 37 CFR 1.47(a) is **DISMISSED** without prejudice.

Any reconsideration on the merits of this petition must be filed within **TWO (2) MONTHS** from the mail date of this decision. Any reconsideration request should include a cover letter entitled "Renewed Petition Under 37 CFR 1.47(a). Extensions of time may be obtained under 37 CFR 1.136(a).

Any further correspondence with respect to this matter should be directed to Mail Stop PCT, Commissioner for Patents, Office of PCT Legal Administration, P.O. Box 1450, Alexandria, Virginia 22313-1450, with the contents of the letter marked to the attention of the Office of PCT Legal Administration.

Anthony Smith
Attorney-Advisor
Office of PCT Legal Administration
Tel: (571) 272-3298
Fax: (571) 273-0459

0 9 FEB 2007

UNITED STATES PATENT AND TRADEMARK OFFICE

Commissioner for Patents
United States Patent and Trademark Office
Washington, D.C. 20231
www.uspto.gov

Pearne & Gordon, LLP
1801 East 9th Street
Suite 1200
Cleveland, Ohio 44114-3108

In re Application of	:	
KURIAN, et al.	:	DECISION ON PETITION
Serial No.: 10/533,872	:	
PCT No.: PCT/CA03/01686	:	UNDER 37 CFR 1.47(a)
Int. Filing Date: 03 November 2003	:	
Priority Date: 05 November 2002	:	
Atty Docket No.: 38248	:	
For: INTELLIGENT DATA MANAGEMENT	:	
SYSTEM AND METHOD	:	

This decision is issued in response to applicant's "Renewed Petition under Rule 37 CFR 1.47(a)" filed 02 October 2006 to accept the application without the signatures of joint inventor, Homayoun Najjaran.

BACKGROUND

On 03 November 2003, applicant filed international application PCT/CA03/01686 which claimed priority to a previous application filed 05 November 2002. Pursuant to 37 CFR 1.495, the deadline for payment of the basic national fee in the United States was to expire 30 months from the priority date, 05 May 2005.

On 05 May 2005, applicant filed a transmittal letter for entry into the national stage in the United States, which was accompanied by the requisite basic national fee as required by 35 U.S.C. 371(c)(1); a copy of the international application; a preliminary amendment; and an Information Disclosure Statement.

On 06 October 2005, applicant was mailed a "Notification of Missing Requirements under 35 U.S.C. 371" (Form PCT/DO/EO/905) informing applicant of the need to provide an oath or declaration of the inventors, in compliance with 37 CFR 1.497(a) and (b), identifying the application by the International application number and international filing date. Applicant was afforded two months to file the proper reply and informed that this period could be extended pursuant to 37 CFR 1.136(a).

On 09 February 2006, applicant filed a petition under 37 CFR 1.47(a) to accept the application without the signature of joint inventor Homayoun Najjaran. In a decision dated 28 June 2006, applicant's petition under 37 CFR 1.47(a) was dismissed without prejudice.

On 02 October 2006, applicant filed the present renewed petition under 37 CFR 1.47(a).

DISCUSSION

A petition under 37 CFR 1.47(a) must be accompanied by (1) the fee under 37 CFR 1.17(g), (2) factual proof that the missing joint investor refuses to execute the application or cannot be reached after diligent effort, (3) a statement of the last known address of the missing inventor, and (4) an oath or declaration by each 37 CFR 1.47(a) applicant on his or her own behalf and on behalf of the non-signing joint inventor.

A review of the papers filed 02 October 2006 reveals that petitioner has paid the requisite petition fee, provided sufficient proof that the non-signing inventor (Homayoun Najjaran) could not be found or reached after diligent effort, stated the last known address of the non-signing inventor (Homayoun Najjaran), and provided an acceptable declaration. Accordingly, all of the requirements of items (1), (2), (3), and (4) above have been satisfied.

Accordingly, the petition to revive under 37 CFR 1.137(b) is granted and it is appropriate to accord the national stage application status under 37 CFR 1.47(a).

CONCLUSION

The petition under 37 CFR 1.47(a) is **GRANTED**.

The application will be given an international filing date of 03 November 2003 under 35 U.S.C. 363, and a date of 09 February 2006 under 35 U.S.C. 371(c).

As provided in 37 CFR 1.47(a), a notice of the filing of this application will be forwarded to the nonsigning inventor at his last known address of record. A notice of the filing of the application under 37 CFR 1.47(a) will be published in the Official Gazette.

This application is being returned to the United States Designated/Elected Office for processing in accordance with this decision.

Anthony Smith

Anthony Smith
Attorney-Advisor
Office of PCT Legal Administration
Tel: (571) 272-3298
Fax: (571) 273-0459

UNITED STATES PATENT AND TRADEMARK OFFICE

Commissioner for Patents
United States Patent and Trademark Office
P.O. Box 1450
Alexandria, VA 22313-1450
www.uspto.gov

COPY MAILED

MAY 2 0 2009

OFFICE OF PETITIONS

HARNESS, DICKEY & PIERCE, P.L.C.
P.O. Box 8910
Reston, VA 20195

In re Application of	:	
Stephane Broquere, et al.	:	
Application No. 10/533,885	:	DECISION ON PETITION
Filed: May 5, 2005	:	TO WITHDRAW
Attorney Docket No. A279	:	FROM RECORD
	:	

This is a decision on the Request to Withdraw as attorney or agent of record under 37 C.F.R. § 1.36(b), filed March 16, 2009.

The request is **NOT APPROVED** because it is moot.

A review of the file record indicates that the power of attorney to Harness, Dickey & Pierce, P.L.C. has been revoked by the assignee of the patent application on March 11, 2009. Accordingly, the request to withdraw under 37 C.F.R. § 1.36(b) is moot.

All future communications from the Office will continue to be directed to the below-listed address until otherwise notified by applicant.

Telephone inquires concerning this decision should be directed to Terri Williams at 571-272-2991.

Terri Williams
Terri Williams
Petitions Examiner
Office of Petitions

cc: **VMWARE, INC.**
Darryl Smith
3401 Hillview Ave.
Palo Alto, CA 94304

UNITED STATES PATENT AND TRADEMARK OFFICE

Commissioner for Patents
United States Patent and Trademark Office
P.O. Box 1450
Alexandria, VA 22313-1450
www.uspto.gov

MAILED

MAR 2 9 2010

OFFICE OF PETITIONS

FOLEY AND LARDNER LLP
SUITE 500
3000 K STREET NW
WASHINGTON DC 20007

In re Application	:
Peter Persoone et al.	:
Application No. 10/533,890	: DECISION ON APPLICATION
Filed: July 7, 2005	: FOR PATENT TERM ADJUSTMENT
Attorney Docket No. **687197615001**	:

This is in response to the REQUEST FOR RECONSIDERATION OF PATENT TERM ADJUSTMENT UNDER 37 C.F.R. § 1.705(b) filed January 15, 2010. Applicant requests that the determination of patent term adjustment be corrected from 281 days to 534 days. Applicant requests this correction in part on the basis that the Office will take in excess of three years to issue this patent and in light of the recent court decision in Wyeth v. Kappos, No. 2009-1120 (Jan. 7, 2010).

As the instant application for patent term adjustment requests reconsideration of the patent term adjustment as it relates to the Office's failure to issue the patent within three years of the filing date, the application for patent term adjustment under 37 CFR 1.705(b) is **DISMISSED as PREMATURE**.

Knowledge of the actual date the patent issues is required to calculate the amount, if any, of additional patent term patentees are entitled to for Office failure to issue the patent within three years. See 37 CFR 1.702(b). (This is true even where a request for continued examination (RCE) was filed). The computer will not undertake the § 1.702(b) calculation until the actual date of issuance of the patent has been determined. Likewise, the computer will not calculate any further Office delay under 37 CFR 1.702(a)(4) or applicant delay under 37 CFR 1.704(c)(10) until the actual date of issuance of the patent has been determined. As such, the Office cannot make a determination on the patent term adjustment relating to those provisions until the patent has issued.

Requesting reconsideration of the patent term adjustment to be indicated on the patent under 37 CFR 1.705(b) based on the initial determination of patent term adjustment and a projected issuance date of the patent (or even the filing date of the request for continued examination) is premature. Accordingly, it is appropriate to dismiss such a request as premature.

Rather than file an application for patent term adjustment under 37 CFR 1.705(b) contesting the 37 CFR 1.702(b) calculation at the time of the mailing of the notice of allowance, applicants are advised that they may wait until the time of the issuance of the patent and file a request for reconsideration of the patent term adjustment pursuant to 37 CFR 1.705(d). As the USPTO does not calculate the amount of time earned pursuant to 37 CFR 1.702(b) until the time of the issuance of the patent, the Office will consider any request for reconsideration of the patent term adjustment due to an error in the calculation of 37 CFR 1.702(b) to be timely if the request for reconsideration is filed within two months of the issuance of the patent. However, as to all other bases for contesting the initial determination of patent term adjustment received with the notice of allowance, applicants must timely file an application for patent term adjustment prior to the payment of the issue fee.[1]

The Office acknowledges submission of the $200.00 fee set forth in 37 CFR 1.18(e) for consideration of the application for patent term adjustment under 37 CFR 1.705(b).

Any request for reconsideration of the patent term adjustment indicated on the patent must be timely filed within two months after issuance pursuant to 37 CFR 1.705(d) and must include payment of the required fee under 37 CFR 1.18(e).

The Office of Data Management has been advised of this decision. This application is being referred to the Office of Data Management for issuance of the patent.

Telephone inquiries specific to this decision should be directed to Senior Petitions Attorney Patricia Faison-Ball at (571) 272-3212.

/Kery A. Fries/

Kery A. Fries
Senior Legal Advisor
Office of Patent Legal Administration
Office of Deputy Commissioner
for Examination Policy

---

[1] For example, if applicants dispute both the calculation of patent term adjustment under 37 CFR 1.702(a)(1) for Office failure to mail a first Office action or notice of allowance not later than fourteen months after the date on which the application was filed, and under 37 CFR 1.702(b) for Office failure to issue a patent within three years of the actual filing date of the application, then applicants must still timely file an application for patent term adjustment prior to the payment of the issue fee to contest the calculation of Office delay in issuing a first Office action or notice of allowance. See 37 CFR 1.705(b) and 35 U.S.C. 154(b)(3)(B). A dispute as to the calculation of the § 1.702(a)(1) period raised on request for reconsideration of patent term adjustment under 37 CFR 1.705(d) will be dismissed as untimely filed.

United States Patent and Trademark Office

Commissioner for Patents
United States Patent and Trademark Office
P.O. Box 1450
Alexandria, VA 22313-1450
www.uspto.gov

0 1 OCT 2007

BIRCH STEWART KOLASCH & BIRCH
PO BOX 747
FALLS CHURCH VA 22040-0747

In re Application of	:	
Kolari et al.	:	
Application No. 10/533,891	:	
PCT No.: PCT/FI03/00834	:	
Int. Filing Date: 06 November 2003	:	DECISION
Priority Date: 06 November 2002	:	
Atty. Docket No.:0696-0215PUS1	:	
For: Inhibiting Biofilm Formation By Thermo-	:	
philic Microbes In Paper And Board Machines	:	

This is with regard to the petition under 37 CFR 1.182 filed on 23 August 2007.

BACKGROUND

This international application was filed on 06 November 2003, claimed an earlier priority date of 06 November 2002, and designated the U.S. The International Bureau transmitted a copy of the published international application to the USPTO on 21 May 2004. Consequently, the thirty month period for payment of the basic national fee in the United States expired as of midnight on 06 May 2005. On 05 May 2005, applicants filed *inter alia* the basic national fee.

On 08 September 2005, a Notification of Missing Requirements (Form PCT/DO/EO/905) was mailed to applicants, requiring the submission of an executed oath or declaration compliant with 37 CFR 1.497(a) and (b).

On 23 September 2005, applicants filed a response, including a declaration.

On 03 March 2006, a Notice of Acceptance (Form PCT/DO/EO/903) was mailed, reflecting a date under 35 U.S.C. 371(c)(1), (2) and (4) of 23 September 2005.

DISCUSSION

Petitioner requests that the name of inventor Hanna LAATIKAINEN be changed to Hanna KALLIO, and presents a "Statement of Inventor" in support of this change. This statement, signed over the name "Hanna Kallio (formerly Laatikainen)," indicates in part that

> I, Hanna Laatikainen of Finland, am a co-inventor of the above-identified application. My surname has changed as a result of my marriage. Therefore, my name should be changed in all matters pertaining to the above-identified application to reflect my new name, Hanna KALLIO.

In view of this statement, it would be appropriate to grant the requested relief.

DECISION

The petition is **GRANTED**.

This application is being returned to the National Stage Processing Branch for further processing consistent with this decision, that is, correction of the name of inventor "LAATIKAINEN, Hanna" to – KALLIO, Hanna –.

George Dombroske
PCT Legal Examiner
Office of PCT Legal Administration
Tel: (571) 272-3283
Fax: (571) 273-0459

UNITED STATES PATENT AND TRADEMARK OFFICE

Commissioner for Patents
United States Patent and Trademark Office
P.O. Box 1450
Alexandria, VA 22313-1450
www.uspto.gov

RADER FISHMAN & GRAUER PLLC
LION BUILDING
1233 20TH STREET N.W., SUITE 501
WASHINGTON DC 20036

COPY MAILED

MAR 28 2008

OFFICE OF PETITIONS

In re Patent No. 7,234,845 :
Issue Date: June 26, 2006 :
Application No. 10/533,903 : DECISION ON PETITION
Filed: May 5, 2005 :
Attorney Docket No. SON-2859 :

This is a decision on the petition under 37 CFR 1.182, filed December 11, 2007, requesting issuance of a duplicate Letters Patent for the above-identified patent.

The petition is **DISMISSED**.

Any request for reconsideration must be submitted within TWO (2) Months from the mail date of this decision. Extensions of time under 37 CFR 1.136(a) are permitted. The reconsideration request should include a cover letter entitled "Renewed Petition". This is **not** final agency action within the meaning of 5 U.S.C. §704.

Petitioner herein requests a duplicate Letters Patent, but have set forth no grounds upon which the requested relief should be granted, such as loss, destruction, or non-receipt of the original Letters Patent.

As patentee is entitled to one Letters Patent, any renewed petition should set forth a reason for why patentee seeks a duplicate.

Further correspondence with respect to this matter should be addressed as follows:

By Mail: Mail Stop PETITION
Commissioner for Patents
P. O. Box 1450
Alexandria, VA 22313-1450

By facsimile: **(571) 273-8300**
Attn: Office of Petitions

By hand: U. S. Patent and Trademark Office
Customer Service Window, Mail Stop Petitions

Randolph Building
401 Dulany Street
Alexandria, VA 22314

Telephone inquiries concerning this decision should be directed to the undersigned at (571) 272-3205.

Alesia M. Brown
Petitions Attorney
Office of Petitions

29 SEP 2005

United States Patent and Trademark Office

#3

Commissioner for Patents
United States Patent and Trademark Office
P.O. Box 1450
Alexandria, VA 22313-1450
www.uspto.gov

Joyce von Natzmer
4615 North Park Avenue, Suite 919
Chevy Chase, MD 20815

In re Application of	:	
Maecke et al.	:	
Application No.: 10/533,906	:	DECISION
PCT No.: PCT/EP01/05483	:	
Int. Filing Date: 11 May 2001	:	ON
Priority Date: 12 May 2000	:	
Attorney Docket No.: 3025-107	:	PETITION
For: Prochelators For The Preparation Of Radiometal	:	
Labeled Molecules Having Improved Biological...	:	

This is in response to the petition to revive under 37 CFR 1.137(b) filed 06 May 2005.

BACKGROUND

This international application was filed on 11 May 2001, claimed an earlier priority date of 12 May 2000, and designated the U.S. The International Bureau transmitted a copy of the published international application to the USPTO on 28 March 2002. A Demand electing the United States was filed prior to the elapse of 19 months from the priority date. The 30 month time period for paying the basic national fee in the United States expired at midnight on 12 May 2004. This international application became abandoned with respect to the national stage in the United States under 35 U.S.C. 371(d) for failure to timely pay the basic national fee.

DISCUSSION

A grantable petition to revive an abandoned application under 37 CFR 1.137(b) must be accompanied by (1) the required reply, unless previously filed; (2) the petition fee as set forth in § 1.17(m); (3) a statement that the entire delay in filing the required reply from the due date for the reply until the filing of a grantable petition pursuant to this paragraph was unintentional. The Commissioner may require additional information where there is a question whether the delay was unintentional; and (4) any terminal disclaimer (and fee as set forth in § 1.20 (d)) required pursuant to paragraph (c) of this section.

Regarding requirement (1), the "required reply" in the form of the basic national fee accompanied the petition.

Regarding requirement (2), the petition fee has been paid.

Regarding requirement (3), applicant states that "the entire delay in entering the application into the National Stage from the due date for entry until the filing of a grantable petition pursuant to 37 C.F.R. § 1.137(b) was unintentional and applicants herewith submit the papers and fees for entering this application into the National Stage." This differs from a statement that "the entire delay in filing the required reply from the due date for the reply until the filing of a grantable petition pursuant to 37 CFR 1.137(b) was unintentional. Moreover, this statement has only been made by one of the joint inventors (Prof. Dr. Helmut Maecke). In the absence of any statement or evidence concerning whether unintentional delay was present on the

part of the other joint inventor(s), it would be inappropriate to consider the requirements of 37 CFR 1.137(b)(3) to have been satisfied.

Regarding requirement (4), no terminal disclaimer is required because the international filing date of this application is later than 8 June 1995.

Inspection of the declaration reveals that it names a joint inventor, "Klaus-Peter" Eisenwiener, who is not named in the published international application, and that the published international application names a joint inventor, "Klaus" Eisenwiener, who is not named in the declaration. Since this discrepancy is clearly more than a mere typographic error or phonetic misspelling of applicant's name, a proper petition under 37 CFR 1.182 is required to resolve this matter. Such a petition must be accompanied by the $400.00 petition fee and by verified statements by the inventors and any other individuals having first-hand knowledge of the error. These statements must set forth in detail the specific circumstances as to how and when the error was made and discovered, and must also state (if appropriate) that the mistake was an inadvertent error made without deceptive intent.

DECISION

The petition under 37 CFR 1.137(b) is **DISMISSED**, without prejudice.

If reconsideration on the merits of this matter is desired, a proper response must be filed within **TWO (2) MONTHS** from the mail date of this decision. Extensions of time are available under 37 CFR 1.136(a).

Please direct any further correspondence with respect to this matter to the Assistant Commissioner for Patents, Mail Stop PCT, P.O. Box 1450, Alexandria, VA 22313-1450, and address the contents of the letter to the attention of the PCT Legal Office.

Boris Milef
PCT Legal Examiner
PCT Legal Office

George M. Dombroske
PCT Legal Examiner
PCT Legal Office
Tel: (571) 272-3283
Fax: (571) 273-0459

BEST AVAILABLE COPY

United States Patent and Trademark Office

Commissioner for Patents
United States Patent and Trademark Office
P.O. Box 1450
Alexandria, VA 22313-1450
www.uspto.gov

#5

27 DEC 2005

Joyce von Natzmer
4615 North Park Avenue, Suite 919
Chevy Chase, MD 20815

In re Application of	:	
Maecke et al.	:	
Application No.: 10/533,906	:	DECISION
PCT No.: PCT/EP01/05483	:	
Int. Filing Date: 11 May 2001	:	ON
Priority Date: 12 May 2000	:	
Attorney Docket No.: 3025-107	:	PETITION
For: Prochelators For The Preparation Of Radiometal Labeled Molecules Having Improved Biological...	:	

This is in response to the renewed petition to revive under 37 CFR 1.137(b) filed 29 November 2005.

DISCUSSION

In a decision mailed on 29 September 2005, the petition under 37 CFR 1.137(b) filed on 06 May 2005 was dismissed without prejudice because

> Regarding requirement (3), applicant states that "the entire delay in entering the application into the National Stage from the due date for entry until the filing of a grantable petition pursuant to 37 C.F.R. § 1.137(b) was unintentional and applicants herewith submit the papers and fees for entering this application into the National Stage." This differs from a statement that "the entire delay in filing the required reply from the due date for the reply until the filing of a grantable petition pursuant to 37 CFR 1.137(b) was unintentional. Moreover, this statement has only been made by one of the joint inventors (Prof. Dr. Helmut Maecke). In the absence of any statement or evidence concerning whether unintentional delay was present on the part of the other joint inventor(s), it would be inappropriate to consider the requirements of 37 CFR 1.137(b)(3) to have been satisfied.

The instant renewed petition is accompanied by statements of unintentional delay signed by Prof. Dr. Helmut Maecke, Klaus-Peter Eisenwiener and Pia Powell, as well as Rita Ziegler on behalf of the University Hospital, Basel, Switzerland. In view of these statements, requirement (3) has now been satisfied. Therefore, all of the requirements of 37 CFR 1.137(b) have now been satisfied.

The decision mailed on 29 September 2005 noted that

> Inspection of the declaration reveals that it names a joint inventor, "Klaus-Peter" Eisenwiener, who is not named in the published international application, and that the published international application names a joint inventor, "Klaus" Eisenwiener, who is not named in the declaration. Since this discrepancy is clearly more than a mere typographic error or phonetic misspelling of applicant's name, a proper petition under 37 CFR 1.182 is required to resolve this matter. Such a petition must be accompanied by the $400.00 petition fee and by verified statements by the inventors and any other individuals having first-hand knowledge

of the error. These statements must set forth in detail the specific circumstances as to how and when the error was made and discovered, and must also state (if appropriate) that the mistake was an inadvertent error made without deceptive intent.

Counsel explains that

Seemingly due to a clerical error, the second part of inventor's Eisenwiener's first name was omitted. However, Klaus-Peter Eisenwiener did, in the declaration submitted on May 6, 2005, declare that he, Klaus-Peter Eisenwiener, is the inventor of the international application. Applicants submit that this differs from a situation where a mistake as to the inventor's name was made in the inventor's declaration (MPEP §605.04(b)).

Counsel further argues that the inventors were named in the international application "for U.S. filing purposes." In this regard, counsel is advised that the given name of inventor Eisenwiener as of the filing of this application was listed as "Klaus," not "Klaus-Peter," and that the name listed in the declaration ("Klaus-Peter") therefore constitutes a change in the inventor's name. See 35 U.S.C. 363. Since this change is clearly more than a result of a mere typographical error or misspelling, the filing of a petition under 37 CFR 1.182 is appropriate, as noted in the previous Decision. Alternatively, applicants may file a new oath or declaration naming the same inventive entity as nominated in the published international application and which complies with all of the requirements of 37 CFR 1.497(a) and (b).

DECISION

The petition under 37 CFR 1.137(b) is **GRANTED**.

This application is being forwarded to the National Stage Processing Branch for the preparation and mailing of a Notification of Missing Requirements (Form PCT/DO/EO/905) requiring the submission of an oath or declaration compliant with 37 CFR 1.497(a) and (b).

Leonard Smith
PCT Legal Examiner
PCT Legal Office

George M. Dombroske
PCT Legal Examiner
PCT Legal Office
Tel: (571) 272-3283
Fax: (571) 273-0459

07 JUN 2006

United States Patent and Trademark Office

#7

Commissioner for Patents
United States Patent and Trademark Office
P.O. Box 1450
Alexandria, VA 22313-1450
www.uspto.gov

Joyce von Natzmer
4615 North Park Avenue, Suite 919
Chevy Chase, MD 20815

In re Application of	:	
Maecke et al.	:	
Application No.: 10/533,906	:	DECISION
PCT No.: PCT/EP01/05483	:	
Int. Filing Date: 11 May 2001	:	ON
Priority Date: 12 May 2000	:	
Attorney Docket No.: 3025-107	:	PETITION
For: Prochelators For The Preparation Of Radiometal	:	
Labeled Molecules Having Improved Biological...	:	

This is in response to the petition under 37 CFR 1.182 filed on 30 March 2006.

DISCUSSION

In a decision mailed on 27 December 2005, a renewed petition under 37 CFR 1.137(b) filed on 29 November 2005 was granted. The decision also stated (in part) that

> counsel is advised that the given name of inventor Eisenwiener as of the filing of this application was listed as "Klaus," not "Klaus-Peter," and that the name listed in the declaration ("Klaus-Peter") therefore constitutes a change in the inventor's name. See 35 U.S.C. 363. Since this change is clearly more than a result of a mere typographical error or misspelling, the filing of a petition under 37 CFR 1.182 is appropriate, as noted in the previous Decision. Alternatively, applicants may file a new oath or declaration naming the same inventive entity as nominated in the published international application and which complies with all of the requirements of 37 CFR 1.497(a) and (b).

The instant petition is signed by all of the inventors and states that Klaus-Peter T. Eisenwiener "is an inventor of the above-referenced application," includes a statement of lack of deceptive intent, and refers to an accompanying "Statement of Arjen J.W. Hoolveld..." Atty. Hoolveld states that he reviewed the "Arnold Siedsma internal file of this application" and describes the opinion he reached after this review of the application history - specifically, he concludes that the discrepancy was "based on a clerical error and/or oversight, but was inadvertent and made without deceptive intent." In view of the totality of the evidence now of record, and since the requisite petition fee has been paid, it would now be appropriate to grant the requested relief. It is noted that the only declaration in compliance with 37 CFR 1.497(a) and (b) and currently present in the application file is the declaration filed on 30 March 2006.

DECISION

The petition under 37 CFR 1.182 is **GRANTED**.

This application is being forwarded to the National Stage Processing Branch for further processing. The date of this application under 35 U.S.C. 371(c)(1), (2) and (4) is **30 March 2006**.

Leonard Smith
PCT Legal Examiner
Office of PCT Legal Administration

George M. Dombroske
PCT Legal Examiner
Office of PCT Legal Administration
Tel: (571) 272-3283
Fax: (571) 273-0459

UNITED STATES PATENT AND TRADEMARK OFFICE

Commissioner for Patents
United States Patent and Trademark Office
P.O. Box 1450
Alexandria, VA 22313-1450
www.uspto.gov

11 FEB 2008

Wenderoth, Lind & Ponack, LLP
2033 K Street, N.W.
Suite 800
Washington, DC 20006-1021

In re Application of BORNMANN, et al. Application No.: 10/533,907 PCT No.: PCT/EP03/13307 Int. Filing Date: 26 November 2003 Priority Date: 27 November 2002 Atty Docket No.: 2005_0770A For: METHOD AND DEVICE FOR APPLYING A TEXTILE AUXILIARY DURING THE STITCH BONDING OF GEOTEXTILES INVOLVING A HYDRODYNAMIC STITCH-BONDING PROCESS	DECISION ON PETITION UNDER 37 CFR 1.181

This decision is in response to applicant's "THIRD REQUEST FOR CORRECTED FILING RECEIPT" filed 20 March 2007 in the United States Patent and Trademark Office (USPTO). The request is being treated as a petition under 37 CFR 1.181 to assign a 35 U.S.C. 371 date of 02 December 2005. No petition fee is required.

A review of the application file finds that applicant provided an executed declaration of the inventors and an English language translation of the international application on 02 October 2005. On 03 October 2005, applicant was mailed a "Notification of Missing Requirements" (Form PCT/DO/EO/905) indicating the need to provide the two above items, as well as, the appropriate surcharge and processing fee for providing these items later than thirty months from the priority date.

On02 December 2005, applicant filed a response which included payment of the surcharge and processing fees.

On 01 March 2006, applicant was mailed a "Notification of Acceptance" (Form PCT/DO/EO/903) which identified the 35 U.S.C. 371(c)(1), (c)(2) and (c)(4) date as 02 October 2005 and the date of completion of all 35 U.S.C. 371 requirements as 02 December 2005. Applicant was concurrently mailed a filing receipt which listed the "filing or 371 (c) date" as "10/02/2005." Applicant seeks a correction of this date to read 02 December 2005.

As explained in the Manual of Patent Examining Procedure (MPEP) section 1893.03(b):

The "Application Filing Date" field formerly displayed in PAIR was changed to "Filing or 371(c) Date" to

clearly indicate that for international applications that enter the national stage under 35 U.S.C. 371, the information displayed in this field is the date of receipt of the 35 U.S.C. 371(c)(1), (c)(2) and (c)(4) requirements. Applicants are quite often confused as to the true filing date and will ask for corrected filing receipts thinking that the information thereon is wrong.

As the filing receipt correctly shows the 35 U.S.C. 371(c)(1), (c)(2) and (c)(4) date as 02 October 2005, applicant's petition under 37 CFR 1.181 is **DISMISSED**.

This application is being returned to Group Art Unit 1733.

Derek A. Putonen
Attorney Advisor
Office of PCT Legal Administration
Tel: (571) 272-3294
Fax: (571) 273-0459

UNITED STATES PATENT AND TRADEMARK OFFICE

Commissioner for Patents
United States Patent and Trademark Office
P.O. Box 1450
Alexandria, VA 22313-1450
www.uspto.gov

ARENT FOX LLP
1050 CONNECTICUT AVENUE, N.W.
SUITE 400
WASHINGTON DC 20036

COPY MAILED

DEC 2 1 2007

OFFICE OF PETITIONS

In re Application of	:	
Marc Valence et al	:	
Application No. 10/533,913	:	DECISION GRANTING PETITION
Filed: May 5, 2005	:	UNDER 37 CFR 1.313(c)(2)
Attorney Docket No. 103120-00066	:	

This is a decision on the petition under 37 CFR 1.313(c)(2), filed December 14, 2007, to withdraw the above-identified application from issue after payment of the issue fee.

The petition is **GRANTED**.

The above-identified application is withdrawn from issue for consideration of a submission under 37 CFR 1.114 (request for continued examination). *See* 37 CFR 1.313(c)(2).

Petitioner is advised that the issue fee paid on July 9, 2007 cannot be refunded. If, however, this application is again allowed, petitioner may request that it be applied towards the issue fee required by the new Notice of Allowance.[1]

Telephone inquiries should be directed to the undersigned at (571) 272-3208.

This application is being referred to Technology Center AU 3725 for processing of the request for continued examination under 37 CFR 1.114 and for consideration of the concurrently filed amendment.

Karen Creasy

Karen Creasy
Petitions Examiner
Office of Petitions

---

[1] *The request to apply the issue fee to the new Notice may be satisfied by completing and returning the new Part B – Fee(s) Transmittal Form (along with any balance due at the time of submission). Petitioner is advised that the Issue Fee Transmittal Form* ***must*** *be completed and timely submitted to avoid abandonment of the application.*

UNITED STATES PATENT AND TRADEMARK OFFICE

Commissioner for Patents
United States Patent and Trademark Office
P.O. Box 1450
Alexandria, VA 22313-1450
www.uspto.gov

Lang, Michener, LLP
BCE Place
Suite 2500, 181 Bay Street
Toronto, ON M5J 2T7 CA
CANADA

COPY MAILED

MAY 17 2007

OFFICE OF PETITIONS

In re Application of	:	
Gary Haughton et al.	:	
Application No. 10/533,914	:	DECISION ON PETITION
Filed: May 5, 2005	:	TO MAKE SPECIAL UNDER
Attorney Docket No. 2349/P1112US04	:	37 CFR 1.102(c)(1)
	:	

This is a decision on the petition under 37 CFR 1.102(c)(1), filed October 4, 2006, to make the above-identified application special based on applicant's age as set forth in M.P.E.P. § 708.02, Section IV.

The petition is **GRANTED**.

A grantable petition to make an application special under 37 CFR 1.102(c)(1) and MPEP § 708.02, Section IV: Applicant's Age must be accompanied by evidence showing that at least one of the applicants is 65 years of age, or more, such as a birth certificate or a statement by applicant. No fee is required

The instant petition includes a signed declaration and a photocopy of a birth certificate. Accordingly, the above-identified application has been accorded "special" status.

Telephone inquiries concerning this decision should be directed to Kimberly Inabinet at 571-272-4618.

All other inquiries concerning either the examination or status of the application should be directed to the Technology Center.

The application is being forwarded to the Technology Center Art Unit 1723 for action on the merits commensurate with this decision.

Frances Hicks

Frances Hicks
Petitions Examiner
Office of Petitions

17 OCT 2005

UNITED STATES PATENT AND TRADEMARK OFFICE

COMMISSIONER FOR PATENTS
UNITED STATES PATENT AND TRADEMARK OFFICE
P.O. BOX 1450
ALEXANDRIA, VA 22313-1450
www.uspto.gov

HAHN LOESER & PARKS, LLP
ONE GOJO PLAZA
SUITE 300
AKRON, OH 44311-1076

In re Application of OZAWA et al	:	
U.S. Application No.: 10/533,918	:	
PCT Application No.: PCT/JP03/14218	:	
Int. Filing Date: 07 November 2003	:	DECISION
Priority Date Claimed: 08 November 2002	:	
Attorney Docket No.: 2003.03.00008	:	
Title: ELECTROLYTE SOLUTION FOR	:	
ELECTROLYTIC CAPACITOR . . .	:	

This is in response to applicant's "Petition to Correct Transmittal Letter" filed 06 July 2005, which is being treated under 37 CFR 1.182.

BACKGROUND

On 07 November 2003, applicant filed international application PCT/JP03/14218, which claimed priority of an earlier Japan application filed 08 November 2002. A copy of the international application was communicated to the USPTO from the International Bureau on 21 May 2004. The thirty-month period for paying the basic national fee in the United States expired on 08 May 2005.

On 06 May 2005, applicant filed two sets of national stage papers in the United States Designated/Elected Office (DO/EO/US). Both sets of national stage papers included a document entitled "Transmittal Letter to the U.S. Designated Office (DO/US)--Entry into the U.S. National Stage Under Chapter I". One set of national stage papers identified the attorney docket number as "200303.00008", and the second set of national stage papers identified the attorney docket number as "200303.00010".

On 06 July 2005, applicant filed the present petition under 37 CFR 1.182.

DISCUSSION

The petition requests processing of the set of national stage papers associated with attorney docket number "200303.00008" under 35 U.S.C. 371 and also requests processing of the papers associated with attorney docket number "200303.00010" under 35 U.S.C. 111(a). Attorney docket number "200303.00008" will be associated with U.S. Application Number 10/533,918, the national stage of PCT/JP03/14218. U.S. Application Number 10/534,100 has been assigned to a different application and should no longer be referenced. Attorney docket number "200303.00010" has been associated with U.S. Application Number 10/536,078, filed under 35 U.S.C. 111(a).

CONCLUSION

The petition under 37 CFR 1.182 is GRANTED.

U.S. Application Number 10/533,918 is being forwarded to the United States Designated/Elected Office (DO/EO/US) for further processing in accordance with this decision, including preparation and mailing of a Notification of Missing Requirements under 35 U.S.C. 371 (Form PCT/DO/EO/905) indicating that a properly executed oath or declaration in compliance with 37 CFR 1.497 must be filed. U.S. Application Number 10/536,078 has been forwarded to the Office of Initial Patent Examination for processing under 35 U.S.C. 111(a).

Bryan Tung
PCT Legal Examiner
PCT Legal Office

Telephone: 571-272-3303
Facsimile: 571-273-0459

30 AUG 2005

#3

UNITED STATES PATENT and TRADEMARK OFFICE

COMMISSIONER FOR PATENTS
UNITED STATES PATENT AND TRADEMARK OFFICE
P.O BOX 1450
ALEXANDRIA, VA 22313-1450
www.uspto.gov

VESUVIUS
ATTN: ROBERT S. KLEMZ, JR.
27 NOBLESTOWN ROAD
CARNEGIE, PA 15106-1632

In re Application of	DECISION ON
DESAI et al	
Application No.: 10/533,921	
PCT No.: PCT/US03/32427	
Int. Filing Date: 14 October 2003	PETITION UNDER
Priority Date: 16 October 2002	
Attorney's Docket No.:1415 US/PCT	
For: PERMEABLE REFRACTORY MATERIAL	
FOR A GAS PURGED NOZZLE	37 CFR 1.137(b)

This decision is in response to applicants' "Petition For Revival Of An International Application For Patent Designating The U.S. Abandoned Unintentionally Under 37 CFR 1.137(b)," filed on 04 May 2005.

BACKGROUND

On 14 October 2003, this international application was filed, claiming an earliest priority date of 16 October 2002.

This international application became abandoned with respect to the United States at midnight on 16 April 2005 for failure to pay the required basic national fee.

On 04 May 2005, applicants filed the instant petition under 37 CFR 1.137(b) and Transmittal letter for entry into the national stage in the United States, which was accompanied by the basic national fee and the petition fee.

DISCUSSION

A grantable petition to revive an abandoned application under 37 CFR 1.137(b) must be accompanied by (1) the required reply, unless previously filed. In a nonprovisional application abandoned for failure to prosecute, the required reply may be met by the filing of a continuing application; (2) the petition fee as set forth in § 1.17(m); and (3) a statement that the entire delay in filing the required reply from the due date for the reply until the filing of a grantable petition pursuant to this paragraph was unintentional. The Commissioner may require additional information where there is a question whether the delay was unintentional; and (4) any terminal disclaimer (and fee as set forth in § 1.20 (d)) required pursuant to paragraph (c) of this section.

Petitioner has provided: (1) the proper reply by submitting the basic national filing fee, (2) the petition fee set forth in §1.17(m) and (3) the proper statement under 137(b)(3). In this application, no terminal disclaimer is required.

Accordingly, the petition is deemed to satisfy requirements (1), (2), (3), and (4) under 37 CFR 1.137(b).

DECISION

The petition under 37 CFR 1.137(b) is **GRANTED**.

This application is being returned to the United States Designated/Elected Office (DO/EO/US) for continued processing.

Rafael Bacares
PCT Legal Examiner
PCT Legal Office
Telephone: (571) 272-3276
Facsimile: (571) 273-0459

#9

UNITED STATES PATENT and TRADEMARK OFFICE

COMMISSIONER FOR PATENTS
UNITED STATES PATENT AND TRADEMARK OFFICE
P.O BOX 1450
ALEXANDRIA, VA 22313-1450
www.uspto.gov

10 FEB 2006

Robert S. KLEMZ, JR.
27 Noblestown Road
Carnegie, PA 15106-1632

In re Application of	:	
DESAI et al	:	DECISION ON
Application No.: 10/533,921	:	
PCT No.: PCT/US03/32427	:	
Int. Filing Date: 14 October 2003	:	PETITION UNDER
Priority Date: 16 October 2002	:	
Attorney Docket No.: 1415 US/PCT	:	
For: PERMEABLE REFRACTORY MATERIAL	:	37 CFR 1.181
FOR A GAS PURGED NOZZLE	:	

This decision is in response to the "RESPONSE TO NOTIFICATION OF MISSING REQUIREMENTS AND PETITION UNDER 37 CFR 1.181" received 26 October 2005, requesting that the executed Declaration was properly filed in the international stage for the above application.

BACKGROUND

On 04 May 2005, applicants filed a transmittal letter for entry into the national stage in the United States which was accompanied by, inter alia, the requisite basic national fee as required by 35 U.S.C. 371(c)(1), a copy of the international application. Applicants, however, did not satisfy the requirement set forth by 35 U.S.C. 371(c)(4) because allegedly no executed Declaration or Oath was provided with the transmittal letter.

On 16 September 2005, the United States Designated/Elected Office (DO/EO/US) mailed a "NOTIFICATION OF MISSING REQUIREMENTS UNDER 35 U.S.C. 371 IN THE UNITED STATES DESIGNATED/ELECTED OFFICE (DO/EO/US)" (Form PCT/DO/EO/905) which informed applicant, inter alia, that an "Oath or Declaration of the inventors, in compliance with 37 CFR 1.47(a) and (b), identifying the application by the International application number and international filing date." The notice also indicated that the items above must be submitted within two (2) months from the date of this notice or 32 months from the priority date, whichever is later, in order to avoid abandonment of the national stage application.

In response to the "NOTIFICATION OF MISSING REQUIREMENTS" mailed on 16 September 2005, on 26 October 2005, applicants filed the current petition accompanied by, inter alia, a copy of the Request filed on 14 October 2003 that contained an executed declaration that was filed under Rule 4.17, and a copy of the date-stamped itemized postcard.

DISCUSSION

A review of the file reveals that the USPTO had received the executed Declaration on 14 October 2003 submitted under PCT Rule 4.17.

Accordingly, the "NOTIFICATION OF MISSING REQUIREMENTS" mailed on 16 September 2005 was in error.

DECISION

The petition under 37 CFR 1.181 is **GRANTED**.

The "NOTIFICATION OF MISSING REQUIREMENTS" mailed on 16 September 2005, is **VACATED** with the mailing of this decision.

This application is being returned to the United States Designated/Elected Office (DO/EO/US) for continued processing under 35 U.S.C. 371. The 35 USC 371(c)(1), (c)(2), and (c)(4) date of this application is **04 May 2005.**

Rafael Bacares
PCT Legal Examiner
PCT Legal Office
Telephone: (571) 272-3276
Facsimile: (571) 273-0459

UNITED STATES PATENT AND TRADEMARK OFFICE

UNITED STATES DEPARTMENT OF COMMERCE
United States Patent and Trademark Office
Address: COMMISSIONER FOR PATENTS
P.O. Box 1450
Alexandria, Virginia 22313-1450
www.uspto.gov

APPLICATION NO.	FILING DATE	FIRST NAMED INVENTOR	ATTORNEY DOCKET NO.	CONFIRMATION NO.
10/533,926	05/04/2005	Hans-Rainer Hoffmann	512100-2046	8229

7590 03/16/2009

William F Lawrence
Frommer Lawrence & Haug
745 Fifth Avenue
New York, NY 10151

EXAMINER
ORWIG, KEVIN S

ART UNIT	PAPER NUMBER
1611	

MAIL DATE	DELIVERY MODE
03/16/2009	PAPER

Please find below and/or attached an Office communication concerning this application or proceeding.

The time period for reply, if any, is set in the attached communication.

UNITED STATES PATENT AND TRADEMARK OFFICE

Commissioner for Patents
United States Patent and Trademark Office
P.O. Box 1450
Alexandria, VA 22313-1450
www.uspto.gov

MAR 1 6 2009

William F Lawrence
Frommer Lawrence & Haug
745 Fifth Avenue
New York NY 10151

In re Application of:
Hoffmann et al.
Serial No.: 10/533,926
Filed: October 17, 2003
Attorney Docket No.: **512100-2046**

: PETITION DECISION

This is in response to the petition under 37 CFR § 1.181, filed on February 10, 2009, which requests withdrawal of finality instituted in the Office action mailed January 23, 2009.

BACKGROUND

The examiner mailed a non-final Office action on May 28, 2008 setting a three month shortened statutory period for reply. In this Office action, claims 1-11 were pending. Claims 5-10 were rejected under 35 USC 112, first paragraph, as failing to comply with the written description requirement; claim 6 was rejected under 35 USC 112, first paragraph, and as failing to comply with the enablement requirement and claims 1-11 were rejected under 35 USC 112, second paragraph as being indefinite. Claims 1-5 were rejected under 35 USC 103 (a) as unpatentable over Zhang et al. in view of Patel et al. and in further view of Weete et al., as evidenced by Stedman's Medical Dictionary, and by Raisch et al. Claims 1, 6, and 7 were rejected under 35 USC 103 (a) as unpatentable over Zhang et al. in view of Patel et al. and in further view of Shen et al. Claims 1 and 8 were rejected under 35 USC 103 (a) as unpatentable over Zhang et al. in view of Meyer et al. Claims 1 and 9 were rejected under 35 USC 103 (a) as unpatentable over Zhang et al. in view of Patel et al. and in further view of Cary. Claims 1 and 10 were rejected under 35 USC 103 (a) as unpatentable over Zhang et al. in view of Patel et al. and in further view of Plotnikoff et al. Claims 1 and 11 were rejected under 35 USC 103 (a) as unpatentable over Zhang et al. in view of Patel et al. and in further view of Serra et al.

On October 28, 2008, applicants filed arguments traversing the examiner's rejections instituted in the non-final Office action of May 28, 2008. In this response, applicants amended claims 1, 7, 9 and 10; and cancelled claims 2, 5, 6 and 8. Applicants also added new claims 12 and 13.

The examiner mailed a final Office action on January 23, 2009 setting a three month shortened statutory period for reply. In this Office action, claims 1, 3, 4, 7, and 9-13 were pending. Claims 1, 3, 4, 7, and 9-13 were rejected under 35 USC 112, first paragraph, as failing to comply with the written description requirement and rejected under 35 USC 112, second paragraph as being indefinite. Claims 1, 3, 4, and 12 were rejected under 35 USC 103 (a) as unpatentable over Zhang et al. in view of Patel et al. and in further view of Weete et al., as evidenced by Stedman's Medical Dictionary, and by Raisch et al. Claims 1 and 7 were rejected under 35 USC 103 (a) as unpatentable over Zhang et al. in view of Patel et al. and Weete et al. and in further view of Shen et al. Claims 1 and 9 were rejected under 35 USC 103 (a) as unpatentable over Zhang et al. in view of Patel et al. and Weete et al., and in further view of Cary. Claims 1 and 10 were rejected under 35 USC 103 (a) as unpatentable over Zhang et al. in view of Patel et al. and Weete et al. and in further view of Plotnikoff et al. Claims 1 and 11 were rejected under 35 USC 103 (a) as unpatentable over Zhang et al. in view of Patel et al. and Weete et al,. and in further view of Serra et al. Claim 13 was rejected under 35 USC 103 (a) as unpatentable over Zhang et al. in view of Patel et al. and Weete et al., as applied to claims 1, 3, 4 and 12 above, and in further view of Majete.

In response thereto, applicants filed this petition under 37 CFR § 1.181 on February 10, 2009 requesting withdrawal of finality of the Office action mailed January 23, 2009.

DISCUSSION

The petition and the file history have been carefully considered.

In this petition filed on February 10, 2009, applicants request withdrawal of the final rejection of January 23, 2009 as new ground of rejections were made by the examiner which were not necessitated by the applicants' amendments. Specifically, applicants argue "The final rejection mailed on 23 January 2009 withdrew all previous rejections made in the Office Action of 28 July 2008 and introduced a new 35 U.S.C. 112, **first paragraph rejection based on new matter, a new 35 U.S.C. 112, second paragraph rejection and new** 35 U.S.C. 103 rejections of claim 13 over Zhang in view of Patel, Weete and Majeti. Further, applicants argue that their "amendment did not necessitate the new grounds of rejection under 35 U.S.C. 103 because the result of the applicants' claim amendments served to narrow the scope of the claims under consideration and did not introduce new limitations which were not previously disclosed in the claims, i.e. the scope of the claims under examination were disclosed in the originally filed claims".

Applicants also argue the guidelines for conducting a search are recited in MPEP 904.03 which states in part:

> "It is a prerequisite to a speedy and just determination of the issues involved in the examination of an application that a careful and comprehensive search, commensurate with the limitations appearing in the most detailed claims in the case, be made in preparing the first action on the merits so that the second action on the merits can be made final or the application allowed with no further searching other than to update the

> original search. It is normally not enough that references be selected to meet only the terms of the claims alone, especially if only broad claims are presented; *but the search should, insofar as possible, also cover all subject matter which the examiner reasonably anticipates might be incorporated into applicant's amendment.* Applicants can facilitate a complete search by including, at the time of filing, claims varying from the broadest to which they believe they are entitled to the most detailed that they would be willing to accept.
>
> In doing a complete search, the examiner should find and cite references that, while not needed for treating the claims, would be useful for forestalling the presentation of claims to other subject matter regarded by applicant as his or her invention, by showing that this other subject matter is old or obvious." (emphasis added)

However, it is pointed out that MPEP §706.07(a) states: " A second or any subsequent action on the merits in any application or patent involved in reexamination proceedings should not be made final if it includes a rejection, on prior art not of record, of any claim amended to include limitations which should reasonably have been expected to be claimed. However, an examiner cannot be expected to foresee whether or how an applicant will amend a claim to overcome a rejection except in very limited circumstances (e.g., where the examiner suggests how applicant can overcome a rejection under 35 U.S.C. 112, second paragraph)." In the present instance, the examiner could not reasonably foresee how applicants would amend these claims. Specifically, the original claims were narrowed, thereby, overcoming the rejections of record and required the examiner to set forth a new ground of rejection. Therefore, applicants' arguments pertaining to the new rejections of the claims are not persuasive.

Applicants also argue "With regard to the rejections based on use of the phrase ---salts thereof---, clearly salt forms are a type of derivative and which is well known to those of ordinary skill in the pharmaceutical art and should have been anticipated as being a part of an amendment to the claim. (There is no basis for the rejection based on lack of written description as salt forms of pharmaceutical compounds have been well established in the art. Moreover, there was no basis for lacking adequate metes and bounds as one of ordinary skill in the art would be able to determine whether an active agent was a salt form or not.) In addition, the amendment to recite salt forms was not presented as a concession that the original rejection was proper, but a good faith effort to advance prosecution of the application." Applicants' argument has been considered but it is not persuasive. Whether or not the rejections per se are proper will not be dealt with herein as this is an appealable matter not a petitionable one. What will be considered is whether the examiner, in making the rejections, properly made the Office action final. It is decided that the Office action was properly made final as the limitation "salts thereof" was not present in the original claims and was added in the amended claims of October 28, 2008. An examiner also cannot be expected to foresee whether or how an applicant will amend a claim to overcome a rejection except in very limited circumstances. Specifically, finality of Office actions on a second action is governed by MPEP § 706.07(a):

> Under present practice, second or any subsequent actions on the merits shall be final, *except where the examiner introduces a <u>new ground</u> of rejection that is neither*

> *necessitated by applicant's amendment of the claims, nor based on information submitted in an information disclosure statement filed during the period set forth in 37 CFR 1.97(c)* with the fee set forth in 37 CFR 1.17(p). Where information is submitted in an information disclosure statement during the period set forth in 37 CFR 1.97(c) with a fee, the examiner may use the information submitted, e.g., a printed publication or evidence of public use, and make the next Office action final whether or not the claims have been amended, provided that no other new ground of rejection which was not necessitated by amendment to the claims is introduced by the examiner. (emphasis added)

Therefore, the MPEP establishes that new rejections may be made in final Office actions so long as the new rejections are necessitated by applicants' amendment(s) to the claims, or based upon information submitted in an information disclosure statement. It is evident that upon amending the claims to recite "salts thereof", the examiner was of the opinion that new rejections were necessary and making the Office action final was proper.

Finally, applicants ague "the rejection of claim 13 introduces a new reference previously not relied upon by the Examiner, i.e. the Majeti reference. As noted above, the elements of Claim 13 were already present in original claim 1 and therefore should have been examined in the first Office Action on the merits and/or anticipated as a possible claim amendment." This argument is also not persuasive since claim 13, which is new, is a combination of original claim 1 and 2. More specifically, claim 1 states (a) **or** (b). New claim 13 is a combination of (a) **and** (b) and claim 2. Therefore, newly added claim 13 sets forth a different limitation with a different scope, thus requiring the newly added reference of Majeti.

Thus, applicants' arguments are not persuasive that the final Office action of January 23, 2009 was improper and the finality of said Office action will not be withdrawn.

DECISION

The petition is **DENIED**.

Any new or renewed petition must be filed within TWO MONTHS of the mail date of this decision.

Should there be any questions about this decision please contact Marianne C. Seidel, by letter addressed to Director, TC 1600, at the address listed above, or by telephone at 571-272-0584 or by facsimile sent to the general Office facsimile number, 703-872-9306.

Andrew Wang
Acting Director, Technology Center 1600

UNITED STATES PATENT AND TRADEMARK OFFICE

Commissioner for Patents
United States Patent and Trademark Office
P.O. Box 1450
Alexandria, VA 22313-1450
www.uspto.gov

MORGAN LEWIS & BOCKIUS LLP
1111 PENNSYLVANIA AVENUE NW
WASHINGTON DC 20004

MAILED

JUN 17 2009

OFFICE OF PETITIONS

In re Patent No. 7,462,623
Ple
Issue Date: December 9, 2008
Application No. 10/533,931
Filed: May 4, 2005
Attorney Docket No. 056291-5205
Title: Quinazoline Derivatives as SRC Tyrosine Kinase Inhibitors

DECISION ON REQUEST FOR RECONSIDERATION OF PATENT TERM ADJUSTMENT

This is a decision on the "REQUEST FOR RECONSIDERATION OF PATENT TERM ADJUSTMENT UNDER 37 C.F.R. § 1.705(b)and (d) For Failure to Add Further Patent Term Adjustment Under § 1.702(b)" filed February 9, 2009. This petition is properly treated under 37 CFR § 1.705(d).

The application for reconsideration of patent term adjustment is **DISMISSED**.

The above-identified application matured into U.S. Patent No. 7,462,623 on December 9, 2008. The patent issued with a patent term adjustment of 551 days. This request for reconsideration of patent term adjustment was timely filed within two months of the issue date of the patent. See, 37 CFR 1.705(d). Patentee requests that the patent term adjustment determination for the above-identified patent be changed from 551 days to 758 days.

Patentee requests recalculation of the patent term adjustment based on the decision in Wyeth v. Dudas, 580 F. Supp. 2d 138, 88 U.S.P.Q. 2d 1538 (D.D.C. 2008). Patentees assert that pursuant to Wyeth, a PTO delay under 35 U.S.C. 154(b)(1)(A) overlaps with a delay under 35 U.S.C. 154(b)(1)(B) only if the delays occur on the same day.

The petition submitted by patentee sets forth a period of adjustment for Office delays totaling 772 days (Three Year Delay under 37 CFR 1.703(b) of 219 days *plus* a period of adjustment due to examination delay pursuant to 37 CFR 1.702(a) of 553 days). The petition also sets forth an overlap of 12 days. The petition also reflects a reduction of patent term adjustment totaling 2 days for applicant's failure to engage in reasonable efforts to conclude prosecution pursuant to 37 CFR 1.704. Thus, patentees assert entitlement to an overall adjustment of 758 days (772 days (553+219) Office delay minus 12 days for overlap minus 2 days for applicant's delay).

Patentee's petition acknowledges the adjustments under 37 CFR 1.702(a) totaling 553 days. Patentee's petition also acknowledges the reduction for applicant's failure to engage in reasonable efforts to conclude prosecution pursuant to 37 CFR 1.704. This reduction totals 2 days.

Under 37 CFR 1.703(f), patentees are entitled to a period of patent term adjustment equal to the period of delays based on the grounds set forth in 37 CFR 1.702 reduced by the period of time during which patentees failed to engage in reasonable efforts to conclude prosecution pursuant to 37 CFR 1.704.

The Office agrees that because certain actions were not taken within specified time frames, the patent is entitled to an adjustment of 553 days pursuant to 37 CFR 1.702(a). However, it should be noted that the calculation of any over three year delay for an application filed pursuant to 35 USC 371 is calculated based upon the commencement date. In this instance the commencement date of the application was May 4, 2005. Thus, the application was pending three years and 219 days until the issuance of the patent on December 9, 2008. For purposes of this decision the Office will utilize, patentees' calculations. As the Office contends the 219 days overlaps with the 553 days for examination delay.

At issue is whether patentees should accrue an additional 219 days of patent term adjustment for the Office taking in excess of three years to issue the patent, as well as 553 days for Office failure to take a certain action within a specified time frame (or examination delay).

The Office contends that 219 days overlap. Patentees' calculation of the period of overlap is inconsistent with the

Office's interpretation of this provision. 35 U.S.C. 154(b)(2)(A) limits the adjustment of patent term, as follows:

> To the extent that the periods of delay attributable to grounds specified in paragraph (1) overlap, the period of any adjustment granted under this subsection shall not exceed the actual number of days the issuance of the patent was delayed.

Likewise, 35 CFR 1.703(f) provides that:

> To the extent that periods of delay attributable to the grounds specified in § 1.702 overlap, the period of adjustment granted under this section shall not exceed the actual number of days the issuance of the patent was delayed.

As explained in Explanation of 37 CFR 1.703(f) and of the United States Patent and Trademark Office Interpretation of 35 U.S.C. 154(b)(2)(A), 69 Fed. Reg. 34283 (June 21, 2004), the Office interprets 35 U.S.C. 154(b)(2)(A) as permitting either patent term adjustment under 35 U.S.C. 154(b)(1)(A)(i)-(iv), or patent term adjustment under 35 U.S.C. 154(b)(1)(B), but not as permitting patent term adjustment under both 35 U.S.C. 154(b)(1)(A)(i)-(iv) and 154(b)(1)(B). Accordingly, the Office implements the overlap provision as follows:

> If an application is entitled to an adjustment under 35 U.S.C. 154(b)(1)(B), the entire period during which the application was pending (except for periods excluded under 35 U.S.C. 154(b)(1)(B)(i)-(iii)), and not just the period beginning three years after the actual filing date of the application, is the period of delay under 35 U.S.C. 154(b)(1)(B) in determining whether periods of delay overlap under 35 U.S.C. 154(b)(2)(A). Thus, any days of delay for Office issuance of the patent more than 3 years after the filing date of the application, which overlap with the days of patent term adjustment accorded prior to the issuance of the patent will not result in any additional patent term adjustment. See, 35 U.S.C. 154(b)(1)(B), 35 U.S.C. 154(b)(2)(A), and 37 CFR § 1.703(f). See, Changes to Implement Patent Term Adjustment Under Twenty Year Term; Final Rule, 65 Fed. Reg. 56366 (Sept. 18, 2000). See, also, Revision of Patent Term Extension and Patent Term Adjustment Provisions; Final

> Rule, 69 Fed. Reg. 21704 (April 22, 2004), 1282 Off. Gaz. Pat. Office 100 (May 18, 2004). See, also, Explanation of 37 CFR 1.703(f) and of the United States Patent and Trademark Office Interpretation of 35 U.S.C. 154(b)(2)(A), 69 Fed. Reg. 34283 (June 21, 2004).

The current wording of § 1.703(f) was revised in response to the misinterpretation of this provision by a number of Patentees. The rule was slightly revised to more closely track the corresponding language of 35 U.S.C. 154(b)(2)(A). The relevant portion differs only to the extent that the statute refers back to provisions of the statute whereas the rule refers back to sections of the rule. This was not a substantive change to the rule nor did it reflect a change of the Office's interpretation of 35 U.S.C. 154(b)(2)(A). As stated in the Explanation of 37 CFR 1.703(f) and of the United States Patent and Trademark Office Interpretation of 35 U.S.C. 154(b)(2)(A), the Office has consistently taken the position that if an application is entitled to an adjustment under the three-year pendency provision of 35 U.S.C. 154(b)(1)(B), the entire period during which the application was pending before the Office (except for periods excluded under 35 U.S.C. 154(b)(1)(B)(i)-(iii)), and not just the period beginning three years after the actual filing or commencement date of the application, is the relevant period under 35 U.S.C. 154(b)(1)(B) in determining whether periods of delay "overlap" under 35 U.S.C. 154(b)(2)(A).

This interpretation is consistent with the statute. Taken together the statute and rule provide that to the extent that periods of delay attributable to grounds specified in 35 U.S.C. 154(b)(1) and in corresponding § 1.702 overlap, the period of adjustment granted shall not exceed the actual number of days the issuance of the patent was delayed. The grounds specified in these sections cover the A) guarantee of prompt Patent and Trademark Office responses, B) guarantee of no more than 3-year application pendency, and C) guarantee or adjustments for delays due to interference, secrecy orders and appeals. A section by section analysis of 35 U.S.C. 154(b)(2)(A) specifically provides that:

> Section 4402 imposes limitations on restoration of term. In general, pursuant to [35 U.S.C.] 154(b)(2)(A)-(C), total adjustments granted for restorations under [35 U.S.C. 154](b)(1) are reduced as follows: (1) To the extent that there are multiple grounds for extending the term of a

> patent that may exist simultaneously (e.g., delay due to a secrecy order under [35 U.S.C.] 181 and administrative delay under [35 U.S.C.] 154(b)(1)(A)), the term should not be extended for each ground of delay but only for the actual number of days that the issuance of a patent was delayed; See 145 Cong. Rec. S14,718[1]

As such, the period for over three-year pendency does not overlap only to the extent that the actual dates in the period beginning three years after the date on which the application was filed overlap with the actual dates in the periods for failure of the Office to take action within specified time frames. In other words, consideration of the overlap does not begin three years after the filing or commencement date of the application.

In this instance, the relevant period under 35 U.S.C. 154(b)(1)(B) in determining whether periods of delay "overlap" under 35 U.S.C. 154(b)(2)(A) is the entire period during which the application was pending before the Office, May 4, 2005, to the date the patent issued on December 9, 2008 (except for periods excluded under 35 U.S.C. 154(b)(1)(B)(i)-(iii)). Prior to the issuance of the patent, 553 days of patent term adjustment were accorded for the Office failing to respond within specified time frames during the pendency of the application. The 553 days accorded pursuant to 37 CFR 1.702(a) overlap with the 219 days of Office delay under 37 CFR 1.702(b).

The application actually issued three years and 219 days after its filing date. The Office did not delay 553 days and then delay an additional 219 days. Accordingly, 553 days of patent term adjustment (not 219 days and 553 days) was properly entered because the period of delay of 219 days attributable to the delay in the issuance of the patent overlaps with the adjustment of 553 days attributable to grounds specified in § 1.702(a). Entry of both periods is not warranted. Thus, 553 days, which includes the 219 days pursuant to 37 CFR 1.702(a), is determined to be the actual number of days that the issuance of the patent was delayed.

---

[1] The AIPA is title IV of the Intellectual Property and Communications Omnibus Reform Act of 1999 (S. 1948), which was incorporated and enacted as law as part of Pub. L. 106-113. The Conference Report for H.R. 3194, 106th Cong. 1st Sess. (1999), which resulted in Pub. L. 106-113, does not contain any discussion (other than the incorporated language) of S. 1948. A section-by-section analysis of S. 1948, however, was printed in the Congressional Record at the request of Senator Lott, See 145 Cong. Rec. S14,708-26 (1999)(daily ed. Nov. 17, 1999).

Accordingly, at issuance, the Office properly entered an overall adjustment of 553 days of patent term adjustment for the Office taking in excess of three years to issue the patent.

In view thereof, no adjustment to the patent term will be made because the correct adjustment of 551 days is properly set forth in the Letters Patent (adjustments totalling 553 days less reductions totalling 2 days).

The Office acknowledges submission of the required $200.00 application fee. See, 37 CFR 1.18(e).

Telephone inquiries specific to this matter should be directed to Petitions Attorney Charlema Grant, at (571) 272-3215.

Kery A Fries

Kery Fries
Senior Legal Advisor Attorney
Office of Patent Legal Administration

UNITED STATES PATENT AND TRADEMARK OFFICE

Commissioner for Patents
United States Patent and Trademark Office
P.O. Box 1450
Alexandria, VA 22313-1450
www.uspto.gov

SEYFARTH SHAW LLP
131 S. DEARBORN ST., SUITE2400
CHICAGO IL 60603-5803

COPY MAILED

NOV 09 2007

OFFICE OF PETITIONS

In re Application of	:	
Li, Jion Lyena	:	
Application No. 10/533,934	:	ON PETITION
Filed: April 17, 2006	:	
Attorney Docket No. 37934-400200	:	

This is a decision on the petition under 37 C.F.R. § 1.137(b), filed July 13, 2007, to revive the above-identified application.

The petition is **GRANTED.**

The petition satisfies the conditions for revival pursuant to the provisions of 37 CFR 1.137(b) in that (1) the reply in the form of a continuing application; (2) the petition fee; and (3) the required statement of unintentional delay have been received. Accordingly, the response has been accepted as having been unintentionally delayed.

The above-identified application is being revived solely for purposes of continuity. As continuity has been established by this decision reviving the above-identified application, the above-identified application is again abandoned in favor of continuing application No. 11/879,092.

Telephone inquiries regarding this decision should be directed to the undersigned at (571) 272-3206.

Liana Walsh
Petitions Examiner
Office of Petitions

UNITED STATES PATENT AND TRADEMARK OFFICE

Commissioner for Patents
United States Patent and Trademark Office
P.O. Box 1450
Alexandria, VA 22313-1450
www.uspto.gov

OCT 19 2007

NIXON & VANDERHYE, PC
901 NORTH GLEBE ROAD, 11TH FLOOR
ARLINGTON VA 22203

OCT 19 2007

In re Application of	:
Rubina Mian et al	:
Serial No.: 10/533,935	: PETITION DECISION
Filed: May 4, 2005	:
Attorney Docket No.: 3772-38	:

This is in response to the petition under 37 CFR 1.181, filed October 2, 2007, requesting withdrawal of the Office action mailed September 20, 2007.

A review of the relevant file history shows that applicants filed RCE papers on September 12, 2007, including a request for a three month suspension of action.

On September 20, 2007, the examiner mailed an Office action to applicants prior to the expiration of period of suspension requested. The Office action was mailed in error and is hereby withdrawn.

The petition is **GRANTED.**

The requested three month suspension runs from the date of filing of the RCE papers, September 12, 2007.

Should there be any questions about this decision please contact William R. Dixon, Jr., by letter addressed to Director, TC 1600, at the address listed above, or by telephone at 571-272-0519 or by facsimile sent to the general Office facsimile number 571-273-8300.

Bruce M. Kisliuk
Director, Technology Center 1600

UNITED STATES PATENT AND TRADEMARK OFFICE

UNITED STATES DEPARTMENT OF COMMERCE
United States Patent and Trademark Office
Address: COMMISSIONER FOR PATENTS
P.O. Box 1450
Alexandria, Virginia 22313-1450
www.uspto.gov

APPLICATION NO.	FILING DATE	FIRST NAMED INVENTOR	ATTORNEY DOCKET NO.	CONFIRMATION NO.
10/533,935	05/04/2005	Rubina Mian	GRT/3772-38	9653

23117 7590 11/05/2009
NIXON & VANDERHYE, PC
901 NORTH GLEBE ROAD, 11TH FLOOR
ARLINGTON, VA 22203

EXAMINER
GITOMER, RALPH J

ART UNIT	PAPER NUMBER
1657	

MAIL DATE	DELIVERY MODE
11/05/2009	PAPER

Please find below and/or attached an Office communication concerning this application or proceeding.

The time period for reply, if any, is set in the attached communication.

UNITED STATES PATENT AND TRADEMARK OFFICE

Commissioner for Patents
United States Patent and Trademark Office
P.O. Box 1450
Alexandria, VA 22313-1450
www.uspto.gov

NOV 0 5 2009

Gary Tanigawa
NIXON & VANDERHYE, PC
901 NORTH GLEBE ROAD, 11TH FLOOR
ARLINGTON VA 22203

In re Application of	:
Mian et al	:Decision on Petition
Serial No.:10/533,935	:
Filed : 4 May 2005	:
Attorney Docket No.: GRT/3772-38	:

This letter is in response to the Petition under 37 C.F.R. 1.144 and 1.181 filed on 30 October 2009 to request withdrawal of the restriction requirement mailed 11 August 2009.

Because the examiner had required restriction amongst inventions which had already been examined together on their merits on 8 August 2006, 12 March 2007, 20 September 2007, and 1 April 2008, the restriction requirement mailed 11 August 2009 was improper.

Accordingly, the petition is **GRANTED.**

The restriction requirement mailed 11 August 2009 has been withdrawn. Claims 1, 5, 7-14, 16-17 and 24 will continue to be examined together.

The non-final Office action mailed 16 October 2009 is withdrawn as incomplete.

The application will forwarded to the examiner to consider the papers filed 14 September 2009 and to prepare an Office action on the merits on Claims 1, 5, 7-14, 16-17 and 24.

Because the Office has sent applicants three non-final Office actions in a row, (two of which, including this one, have been vacated) in order to help ensure compact prosecution, the next Office action will be reviewed by the Supervisory Patent Examiner prior to mailing, per MPEP 707.02 second paragraph.

> "The supervisory patent examiners are expected to personally check on the pendency of every application which is up for the third or subsequent Office action with a view to finally concluding its prosecution."

Should there be any questions regarding this decision, please Quality Assurance Specialist Julie Burke, by mail addressed to Director, Technology Center 1600, PO BOX 1450, ALEXANDRIA, VA 22313-1450, or by telephone at (571) 272-0512 or by Official Fax at 571-273-8300.

Remy Yucel
Director, Technology Center 1600

16 MAR 2006

#8

UNITED STATES PATENT AND TRADEMARK OFFICE

Commissioner for Patents
United States Patent and Trademark Office
P.O. Box 1450
Alexandria, VA 22313-1450
www.uspto.gov

NIXON & VANDERHYE, PC
901 NORTH GLEBE ROAD, 11TH FLOOR
ARLINGTON VA 22203

In re Application of JEHA et al. Serial No.: 10/533,940 PCT No.: PCT/AU04/00810 Int. Filing Date: 21 June 2004 Priority Date: 20 June 2003 Attorney's Docket No.: 4398-207 For: BREATHABLE GAS APPARATUS WITH HUMIDIFIER	DECISION ON RESPONSE TO NOTIFICATION TO MISSING REQUIREMENTS

This is a decision on applicants' "Response to Notification of Missing Requirements", filed on 30 November 2005 in the United States Patent and Trademark Office (USPTO). Petitioner seeks to add Andrew Charles Murray, Mark John Payne and Simone Marie Jeha as inventors in the above referenced application.

BACKGROUND

On 04 May 2005, within the thirty month period, applicant filed a Transmittal Letter requesting entry into the national stage in the United States of America under 35 U.S.C. § 371 with, *inter alia*, the requisite basic national fee. On 08 July 2005, applicant filed a declaration executed only by Andrew Charles Murray, Mark John Payne and Simone Marie Jeha (who were not identified in the published International application).

On 24 October 2005, a Notification of Missing Requirements was mailed to applicant indicating that the oath or declaration was not executed in accordance with either 37 CFR 1.66 or 1.68 and drawing applicant's attention to the fact that the declaration had not been executed by inventors listed on the International Application.

On 05 November 2005, applicant filed a Response to the Notification of Missing Requirements.

DISCUSSION

Applicant states the Andrew Charles Murray, Mark John Payne and Simone Marie Jeha were added as inventors during the international phase and provided copies of the Notification of the Recording of a Change from the International Bureau (Forms PCT/IB/306) indicating that Andrew Charles Murray, Mark John Payne and Simone Marie Jeha were added to the international application and that the correction was accepted by the International Bureau.

However, the declaration submitted on 08 July 2005 does not include all the inventors listed on the published International application. The following inventors were not identified on the declaration which was executed by Andrew Charles Murray, Mark John Payne and Simone Marie Jeha: Barton John Kenyon, Arthur Kin-Wai Yee, Rohan Neil Primrose, Jim Saada, John Michael Snow, Marek Tomasz Sapula, Geoffrey Crumblin, Duncan Lovel Trevor-Wilson, Perry David Lithgow, Alexander Virr, and Donald Angus Richmond. The declaration does not identify all the inventors and thus, does meet the requirements of 37 CFR 1.497(a) and (b) and is unacceptable.

CONCLUSION

The declaration submitted on 08 July 2005 is unacceptable because it does not identify all inventors and therefore, it does meet the requirements of 37 CFR 1.497(a) and (b).

The application will be held in the Office of PCT Legal Administration to await applicant's further response. Applicant may furnish a response within ONE (1) month or the time period remaining under the 24 October 2005 Notification of Missing Requirements.

Any further correspondence with respect to this matter should be addressed to the Mail Stop PCT, Commissioner for Patents, Office of PCT Legal Administration, P.O. Box 1450, Alexandria, Virginia 22313-1450, with the contents of the letter marked to the attention of the Office of PCT Legal Administration.

Cynthia M. Kratz
Attorney Advisor
PCT Legal Office

Telephone: (571)272-3286
Facsimile: (571)273-0459

02 OCT 2006

#10

UNITED STATES PATENT AND TRADEMARK OFFICE

Commissioner for Patents
United States Patent and Trademark Office
P.O. Box 1450
Alexandria, VA 22313-1450
www.uspto.gov

NIXON & VANDERHYE, PC
901 NORTH GLEBE ROAD, 11TH FLOOR
ARLINGTON VA 22203

In re Application of JEHA et al. Serial No.: 10/533,940 PCT No.: PCT/AU04/00810 Int. Filing Date: 21 June 2004 Priority Date: 20 June 2003 Attorney's Docket No.: 4398-207 For: BREATHABLE GAS APPARATUS WITH HUMIDIFIER	DECISION ON PETITION UNDER 37 CFR 1.497(a) & (b)

This is a decision on applicants' "Response to Decision on Response to Notification of Missing Requirements" along with a petition under 37 CFR 1.47(a), filed on 24 May 2006 in the United States Patent and Trademark Office (USPTO).

BACKGROUND

On 04 May 2005, within the thirty month period, applicant filed a Transmittal Letter requesting entry into the national stage in the United States of America under 35 U.S.C. § 371 with, *inter alia*, the requisite basic national fee. On 08 July 2005, applicant filed a declaration executed only by Andrew Charles Murray, Mark John Payne and Simone Marie Jeha (who were not identified in the published International application).

On 24 October 2005, a Notification of Missing Requirements was mailed to applicant indicating that the oath or declaration was not executed in accordance with either 37 CFR 1.66 or 1.68 and drawing applicant's attention to the fact that the declaration had not been executed by inventors listed on the International Application.

On 30 November 2005, applicant filed a Response to the Notification of Missing Requirements. On 16 March 2006, a decision was mailed to applicant, indicating the declaration did not identify all the inventors and thus, did meet the requirements of 37 CFR 1.497(a) and (b) and was unacceptable.

On 24 May 2006, applicant filed a "Response to Decision on Response to Notification of Missing Requirements" and a petition under 37 CFR 1.47(a).

DISCUSSION

Petitioner argues that the declaration submitted on 08 July 2005 met the requirements of 37 CFR 1.63 and thus, 37 CFR .1497(a) and (b). Andrew Charles Murray, Mark John Payne and Simone Marie Jeha were added as inventors during the international phase under PCT Rule 92bis.

A review of the 08 July 2005 declaration reveals that only the inventors, who were added, were listed thereon. The inventors listed on the published international application were not identified on the declaration submitted on 08 July 2005 and are required by 37 CFR 1.41(d).

37 CFR 1.41(d) states, in pertinent part: "The inventorship of an international application entering the national stage under 35 U.S.C. 371 is that inventorship set forth in the international application, which includes any change effected under PCT Rule 92bis". Thus, the 08 July 2005 declaration does not meet the requirements of 37 CFR 1.497(a) and (b).

With the exception of inventor Marek Tomasz Supula, the declarations submitted on 24 May 2006 are executed by all the inventors named in the international application including those added under PCT Rule 92bis. Petitioner has presented a petition under 37 CFR 1.47(a) with regard to the signature of inventor Marek Tomasz Supula.

Petition under 37 CFR 1.47(a)

A petition under 37 CFR 1.47(a) must be accompanied by: (1) the fee under 37 CFR 1.17(h); (2) factual proof that the missing joint inventor refuses to execute the application or cannot be reached after diligent effort; (3) a statement of the last known address of the missing inventor; and (4) an oath or declaration by each 37 CFR 1.47(a) applicant on his or her own behalf and on behalf of the non-signing joint inventor.

As to item (1), Petitioner has authorized payment of petition fee of $200 under 37 CFR 1.17(g) from his deposit account. Thus, item (1) has been satisfied. Item (3) has been satisfied with the non-signing inventor's last known address. As noted above, Item (4) is satisfied with the declaration filed with the petition, which is in compliance with 37 CFR 1.497(a) & (b).

However, Item (2) has not been satisfied.

MPEP § 409.03(d) states, in part:

> A refusal by an inventor to sign an oath or declaration when the inventor has not been presented with the application papers does not itself suggest that the inventor is refusing to join the application unless it is clear that the inventor understands exactly what he or she is being asked to sign and refuses to accept the application papers. A copy of the application papers should be sent to the last known address of the nonsigning inventor, or, if the nonsigning inventor is represented by counsel, to the address of the nonsigning inventor's attorney. . . . It is reasonable to require that the inventor be presented with the application papers before a petition under 37 CFR 1.47 is granted since such a procedure ensures that the inventor is apprised of the application to which the oath or declaration is directed. In re Gray, 115 USPQ 80 (Comm'r Pat. 1956).
>
> Where a refusal of the inventor to sign the application papers is alleged, the circumstances of the presentation of the application papers and of the refusal must be specified in a statement of facts by the person who presented the inventor with the application papers and/or to whom the refusal was made. Statements by a party not present when an oral refusal is made will not be accepted.
>
> Proof that a *bona fide* attempt was made to present a copy of the application papers (specification, including claims, drawings, and oath or declaration) to the nonsigning inventor for signature, but the inventor refused to accept delivery of the papers or expressly stated that the application papers should not be sent, may be sufficient. When there is an express oral refusal, that fact along with the time and place of the refusal must be stated in the statement of facts. When there is an express written refusal, a copy of the document evidencing that refusal must be made part of the statement of facts. The document may be redacted to remove material not related to the inventor's reasons for

refusal.

When it is concluded by the 37 CFR 1.47 applicant that a nonsigning inventor's conduct constitutes a refusal, all facts upon which the conclusion is based should be stated in a statement of facts in support of the petition or directly in the petition. If there is documentary evidence to support facts alleged in the petition or any statement of facts, such evidence should be submitted. Whenever a nonsigning inventor gives a reason for refusing to sign the application oath or declaration, that reason should be stated in the petition.

Here, Petitioner has not demonstrated that a complete copy of the application papers including the specification, claims and drawings was sent to inventor Supula. A statement of first hand knowledge was not presented regarding the details of attempts to secure the signature of Mr. Supula, i.e., delivery of the application papers, telephone calls, email messages, etc. Details regarding the date, time and place of the attempts is required.

As noted above, a complete copy of the application must be provided to the inventor to assure that the non-signing inventor is apprised of the application to which the declaration is directed. Thus, in light of the MPEP §409.03(d) instruction regarding an inventor's refusal to sign, Petitioner has not established a refusal to sign.

Item (2) is not yet satisfied and thus, the petition under 37 CFR 1.47(a) is dismissed without prejudice.

CONCLUSION

For the above reasons, applicants' petition under 37 CFR 1.47(a) is **DISMISSED**, without prejudice.

If reconsideration on the merits of this petition is desired, a proper response must be filed within TWO (2) MONTHS from the mail date of this decision. **Failure to timely file the proper response will result in abandonment of this application.** Any reconsideration request should include a cover letter entitled "Renewed Petition Under 37 CFR 1.47(a)". No additional petition fee is required. Extensions of time may be obtained under 37 CFR 1.136(a).

Please direct further correspondence with respect to this matter to Mail Stop PCT, Commissioner for Patents, Office of PCT Legal Administration, P.O. Box 1450, Alexandria, Virginia 22313-1450, with the contents of the letter marked to the attention of the Office of PCT Legal Administration.

Cynthia M. Kratz

Cynthia M. Kratz
Attorney Advisor
PCT Legal Affairs
Office of Patent Cooperation Treaty
Legal Administration
Telephone: (571) 272-3286
Facsimile: (571) 273-0459

#12

UNITED STATES PATENT AND TRADEMARK OFFICE

Commissioner for Patents
United States Patent and Trademark Office
P.O. Box 1450
Alexandria, VA 22313-1450
www.uspto.gov

07 FEB 2007

NIXON & VANDERHYE, PC
901 NORTH GLEBE ROAD, 11TH FLOOR
ARLINGTON VA 22203

In re Application of JEHA et al. Serial No.: 10/533,940 PCT No.: PCT/AU04/00810 Int. Filing Date: 21 June 2004 Priority Date: 20 June 2003 Attorney's Docket No.: 4398-207 For: BREATHABLE GAS APPARATUS WITH HUMIDIFIER	DECISION ON PETITION UNDER 37 CFR 1.47(a) & 1.497

This is a decision on applicants' "Response to Decision on Petition under 37 CFR 1.497(a) and (b)", filed on 29 December 2006 in the United States Patent and Trademark Office (USPTO). Applicant also requests a one month extension of time, which is granted.

BACKGROUND

On 04 May 2005, within the thirty month period, applicant filed a Transmittal Letter requesting entry into the national stage in the United States of America under 35 U.S.C. § 371 with, *inter alia*, the requisite basic national fee. On 08 July 2005, applicant filed a declaration executed only by Andrew Charles Murray, Mark John Payne and Simone Marie Jeha (who were not identified in the published International application).

On 24 October 2005, a Notification of Missing Requirements was mailed to applicant indicating that the oath or declaration was not executed in accordance with either 37 CFR 1.66 or 1.68 and drawing applicant's attention to the fact that the declaration had not been executed by inventors listed on the International Application.

On 30 November 2005, applicant filed a Response to the Notification of Missing Requirements. On 16 March 2006, a decision was mailed to applicant, indicating the declaration did not identify all the inventors and thus, did meet the requirements of 37 CFR 1.497(a) and (b) and was unacceptable.

On 24 May 2006, applicant filed a "Response to Decision on Response to Notification of Missing Requirements" and a petition under 37 CFR 1.47(a).

On 2 October 2006, a decision dismissing the petition was mailed indicating that Petitioner had failed to satisfy the requirements of 37 CFR 1.497(a) and (b) and 1.47(a). On 29 December 2006, applicant filed the instant response.

DISCUSSION

Petitioner has now presented a renewed petition under 37 CFR 1.47(a) along with the declaration signed by inventor Marek Tomasz Supula. A review of the declarations reveals that the declarations identify and are executed by all the inventors named in the international application including those added under PCT Rule 92bis. The declarations state the residency, citizenship and mailing address of each inventor. Thus, the declarations are acceptable and the requirements of 37 CFR 1.497(a) and (b).

The renewed petition under 37 CFR 1.47(a) is considered moot as declaration executed by the previously unavailable inventor has now been submitted. The declarations are acceptable under 37 CFR 1.497(a) and (b).

CONCLUSION

For the above reasons, the renewed petition under 37 CFR 1.47(a) is **DISMISSED AS MOOT**. The declarations executed by the joint inventors and submitted on 29 December 2006 is in compliance with 37 CFR 1.497(a) and (b) and are acceptable.

This application is being forwarded to United States Designated/Elected Office for further processing. The 35 U.S.C. 371(c)(1), (c)(2) and (c)(4) date is **29 December 2006.**

Cynthia M. Kratz

Cynthia M. Kratz
Attorney Advisor
PCT Legal Office

Tel: 571-272-3286
Fax: 571-273-0459

UNITED STATES PATENT AND TRADEMARK OFFICE

UNITED STATES DEPARTMENT OF COMMERCE
United States Patent and Trademark Office
Address: COMMISSIONER FOR PATENTS
P.O. Box 1450
Alexandria, Virginia 22313-1450
www.uspto.gov

APPLICATION NO.	FILING DATE	FIRST NAMED INVENTOR	ATTORNEY DOCKET NO.	CONFIRMATION NO.
10/533,944	05/04/2005	Marc Borner	MERCK-3010	9585

24997 7590 11/19/2008
MILLEN, WHITE, ZELANO & BRANIGAN, PC
2200 CLARENDON BLVD
SUITE 1400
ARLINGTON, VA 22201

EXAMINER
NGUYEN, THUY-AI N

ART UNIT	PAPER NUMBER
1796	

MAIL DATE	DELIVERY MODE
11/19/2008	PAPER

Please find below and/or attached an Office communication concerning this application or proceeding.

The time period for reply, if any, is set in the attached communication.

UNITED STATES PATENT AND TRADEMARK OFFICE

Commissioner for Patents
United States Patent and Trademark Office
P.O. Box 1450
Alexandria, VA 22313-1450
www.uspto.gov

wk

Mailed: 11-19-08

In re application of	:	
Marc Boerner et al.	:	DECISION ON
Serial No. 10/533,944	:	PETITION
Filed: October 10, 2003	:	
For: Semiconductor Surface Treatment And Mixture	:	
Used Therein	:	

This is a decision on the PETITION UNDER 37 CFR 1.181 to the Group Director for withdrawal of the finality. The Office Action in question was mailed out on April 29, 2008.

On September 29, 2008, the instant petition under 37 CFR 1.181 was filed.

DECISION

Rule 1.181, Section (f) states:
§ 1.181 Petition to the Commissioner.

(f) Any petition under this part not filed within two months of the mailing date of the action or notice from which relief is requested may be dismissed as untimely, except as otherwise provided. This two-month period is not extendable

The petition is not signed and is dated November 28, 2007 on the second page.

Accordingly, the instant petition is **DISMISSED.**

Jacqueline M. Stone, Director
Technology Center 1700
Chemical and Materials Engineering

Anthony J. Zelano
MILLEN, WHITE, ZELANO & BRANIGAN, PC
2200 CLARENDON BLVD
SUITE 1400
ARLINGTON VA 22201

UNITED STATES PATENT AND TRADEMARK OFFICE

UNITED STATES DEPARTMENT OF COMMERCE
United States Patent and Trademark Office
Address: COMMISSIONER FOR PATENTS
P.O. Box 1450
Alexandria, Virginia 22313-1450
www.uspto.gov

APPLICATION NO.	FILING DATE	FIRST NAMED INVENTOR	ATTORNEY DOCKET NO.	CONFIRMATION NO.
10/533,948	05/04/2005	Shin Hotta	SON-2856	9638

7590 02/07/2008
RADER FISHMAN & GRAUER PLLC
LION BUILDING
1233 20TH STREET N.W., SUITE 501
WASHINGTON, DC 20036

EXAMINER
HEINRICH, SAMUEL M

ART UNIT	PAPER NUMBER
1793	

MAIL DATE	DELIVERY MODE
02/07/2008	PAPER

DECISION DISMISSING PETITION UNDER 37 CFR 1.138(d)

The declaration of express abandonment will not be recognized

This is in response to the petition under 37 CFR 1.138(d), requesting for a refund of any previously paid search fee and excess claims fee in the above-identified application.

The petition is dismissed.

The express abandonment will **not** be recognized for the reason(s) indicated below:

1. ☐ The petition was not filed in sufficient time to permit the appropriate officials to recognize the abandonment before an examination has been made of the application. See 37 CFR 1.138(d).
2. ☐ The petition was not signed by a party authorized by 37 CFR 1.33(b)(1), (3) or (4).
3. ☒ The application is not an application filed under 35 U.S.C. 111(a) on or after December 8, 2004.
4. ☐ The petition for express abandonment under 1.138(d) is dismissed because the applicant did not pay any search fee and excess claims fees in the above-identified application.

Telephone inquiries should be directed to the Office of Data Management at (571) 272-4200.

Patent Publication Branch
Office of Data Management

FORM PET651D (Rev. 08/07)

UNITED STATES PATENT AND TRADEMARK OFFICE

Commissioner for Patents
United States Patent and Trademark Office
P.O. Box 1450
Alexandria, VA 22313-1450
www.uspto.gov

Borden Ladner Gervais LLP
1100-100 Queen Street
Ottawa ON K1P 1J9
CANADA

COPY MAILED
MAR 18 2010

In re Application of	:	
Islam et al.	:	
Application No. 10/533,957	:	ON APPLICATION FOR
Filed: 05/04/2005	:	PATENT TERM ADJUSTMENT
Atty. Docket No. PAT 800W-2	:	

This is in response to the Request for Reconsideration of Patent Term Adjustment filed December 23, 2009. Applicants submit that the correct patent term adjustment to be indicated on the patent is one thousand fifty-four (1,054) days, not five hundred ninety-six (596) days as calculated by the Office as of the mailing of the initial determination of patent term adjustment. Applicants seek this correction solely on the basis that the Office will take in excess of three years to issue this patent.

As the instant application for patent term adjustment requests reconsideration of the patent term adjustment as it relates to the Office's failure to issue the patent within three years of the filing date, the application for patent term adjustment under 37 CFR 1.705(b) is **DISMISSED as PREMATURE**.

Knowledge of the actual date the patent issues is required to calculate the amount, if any, of additional patent term patentees are entitled to for Office failure to issue the patent within three years. See 37 CFR 1.702(b). (This is true even where a request for continued examination (RCE) was filed). The computer will not undertake the § 1.702(b) calculation until the actual date of issuance of the patent has been determined. Likewise, the computer will not calculate any further Office delay under 37 CFR 1.702(a)(4) or applicant delay under 37 CFR

1.704(c)(10) until the actual date of issuance of the patent has been determined. As such, the Office cannot make a determination on the correctness of the patent term adjustment until the patent has issued.

Requesting reconsideration of the patent term adjustment to be indicated on the patent under 37 CFR 1.705(b) based on the initial determination of patent term adjustment and a projected issuance date of the patent (or even the filing date of the request for continued examination) is premature. Accordingly, it is appropriate to dismiss such a request as premature.

Rather than file an application for patent term adjustment under 37 CFR 1.705(b) contesting the 37 CFR 1.702(b) calculation at the time of the mailing of the notice of allowance, applicants are advised that they may wait until the time of the issuance of the patent and file a request for reconsideration of the patent term adjustment pursuant to 37 CFR 1.705(d). As the USPTO does not calculate the amount of time earned pursuant to 37 CFR 1.702(b) until the time of the issuance of the patent, the Office will consider any request for reconsideration of the patent term adjustment due to an error in the calculation of 37 CFR 1.702(b) to be timely if the request for reconsideration is filed within two months of the issuance of the patent. However, as to all other bases for contesting the initial determination of patent term adjustment received with the notice of allowance, applicants must timely file an application for patent term adjustment prior to the payment of the issue fee.[1]

The Office acknowledges submission of the $200.00 fee set forth in 37 CFR 1.18(e) for consideration of the application for patent term adjustment under 37 CFR 1.705(b).

---

[1] For example, if applicants dispute both the calculation of patent term adjustment under 37 CFR 1.702(a)(1) for Office failure to mail a first Office action or notice of allowance not later than fourteen months after the date on which the application was filed, and under 37 CFR 1.702(b) for Office failure to issue a patent within three years of the actual filing date of the application, then applicants must still timely file an application for patent term adjustment prior to the payment of the issue fee to contest the calculation of Office delay in issuing a first Office action or notice of allowance. See 37 CFR 1.705(b) and 35 U.S.C. 154(b)(3)(B). A dispute as to the calculation of the § 1.702(a)(1) period raised on request for reconsideration of patent term adjustment under 37 CFR 1.705(d) will be dismissed as untimely filed.

Any request for reconsideration of the patent term adjustment indicated on the patent must be timely filed within two months after issuance pursuant to 37 CFR 1.705(d) and must include payment of the required fee under 37 CFR 1.18(e).

The Office of Data Management has been advised of this decision. This application is being referred to the Office of Data Management for issuance of the patent.

Telephone inquiries specific to this decision should be directed to the undersigned at (571) 272-3211.

Christina Tartera Donnell

Christina Tartera Donnell
Senior Petitions Attorney
Office of Petitions

#4

UNITED STATES PATENT and TRADEMARK OFFICE

14 DEC 2005

COMMISSIONER FOR PATENTS
UNITED STATES PATENT AND TRADEMARK OFFICE
P.O BOX 1450
ALEXANDRIA, VA 22313-1450
www.uspto.gov

SUGHRUE MION, PLLC
2100 Pennsylvania Avenue, N.W.
Washington, D.C. 20037-3213

In re Application of	:	DECISION ON
Jose Manuel SAMPAIO CAMACHO	:	
Application No.: 10/533,961	:	
PCT No.: PCT/FR02/003582	:	
Int. Filing Date: 18 October 2002	:	PETITION UNDER
Priority Date: NA	:	
Attorney's Docket No.: Q87908	:	
For: RESEALABLE FLEXIBLE PACKAGING	:	37 CFR 1.137(b)

This decision is in response to applicant's "Petition For Revival Of An International Application For Patent Designating The U.S. Abandoned Unintentionally Under 37 CFR 1.137(b)," filed on 04 May 2005.

BACKGROUND

On 18 October 2002, this international application was filed. It did not claim priority.

The deadline for paying the basic national fee in the United States under 35 U.S.C. 371 and 37 CFR 1.495 was 18 April 2005. This international application became abandoned with respect to the United States at midnight on 18 April 2005 for failure to pay the required basic national fee.

On 04 May 2005, applicants filed the instant petition under 37 CFR 1.137(b) and Transmittal letter for entry into the national stage in the United States, which was accompanied by the basic national fee and the petition fee.

DISCUSSION

A grantable petition to revive an abandoned application under 37 CFR 1.137(b) must be accompanied by (1) the required reply, unless previously filed. In a nonprovisional application abandoned for failure to prosecute, the required reply may be met by the filing of a continuing application; (2) the petition fee as set forth in § 1.17(m); and (3) a statement that the entire delay in filing the required reply from the due date for the reply until the filing of a grantable petition pursuant to this paragraph was unintentional. The Commissioner may require additional information where there is a question whether the delay was unintentional; and (4) any terminal disclaimer (and fee as set forth in § 1.20 (d)) required pursuant to paragraph (c) of this section.

Petitioner has provided: (1) the proper reply by submitting the basic national filing fee, (2) the petition fee set forth in §1.17(m) and (3) the proper statement under 137(b)(3). In this application, no terminal disclaimer is required.

Accordingly, the petition is deemed to satisfy requirements (1), (2), (3), and (4) under 37 CFR 1.137(b).

DECISION

The petition under 37 CFR 1.137(b) is **GRANTED**.

This application is being returned to the United States Designated/Elected Office (DO/EO/US) for continued processing.

Rafael Bacares
PCT Legal Examiner
PCT Legal Office
Telephone: (571) 272-3276
Facsimile: (571) 273-0459

UNITED STATES PATENT AND TRADEMARK OFFICE

UNITED STATES DEPARTMENT OF COMMERCE
United States Patent and Trademark Office
Address: COMMISSIONER FOR PATENTS
P.O. Box 1450
Alexandria, Virginia 22313-1450
www.uspto.gov

STITES & HARBISON PLLC
1199 NORTH FAIRFAX STREET
SUITE 900
ALEXANDRIA, VA 22314

Mail Date: 04/21/2010

Applicant	: Jean-Francois Cova	: DECISION ON REQUEST FOR
Patent Number	: 7596248	: RECALCULATION of PATENT
Issue Date	: 09/29/2009	: TERM ADJUSTMENT IN VIEW
Appliction No	: 10/533,964	: OF WYETH AND NOTICE OF INTENT TO
Filed	: 05/04/2005	: ISSUE CERTIFICATE OF CORRECTION
		:

The Request for Recalculation is **GRANTED** to the extent indicated.

The patent term adjustment has been determined to be **1179** days. The USPTO will *sua sponte* issue a certificate of correction reflecting the amount of PTA days determined by the recalculation.

Prior to the issuance of the certificate of correction, the USPTO will afford patentee an opportunity to be heard and request reconsideration. Accordingly, patentee has **one month or thirty (30) days**, whichever is longer, to file a request for reconsideration of this patent term adjustment calculation. See 35 U.S.C. 154(b)(3)(B)(ii) and 37 CFR 1.322(a)(4). No extensions of time will be granted under 37 CFR 1.136.

Patentee should use document code PET.OP if electronically filing a request for reconsideration of this patent term adjustment calculation. The patentee must also include the information required by 37 CFR 1.705(b)(2) and the fee required by 37 CFR 1.18(e). If patentee does not file a timely request for reconsideration of this patent term adjustment calculation including the information required by 37 CFR 1.705(b)(2) and the fee required by 37 CFR 1.18(e), the USPTO will issue a certificate of correction reflecting the PTA determination noted above.

Patentee should be aware that in order to preserve the right to review in the United States District Court for the District of Columbia of the USPTO patent term adjustment determination, patentee must ensure that he or she also take the steps required under 35 U.S.C. 154(b)(4)(A) in a timely manner. Nothing in the request for recalculation should be construed as providing an alternative time frame for commencing a civil action under 35 U.S.C. 154(b)(4)(A).

Any questions concerning this decision should be directed to the Office of Patent Legal Administration at 571-272-7702.

UNITED STATES PATENT AND TRADEMARK OFFICE

UNITED STATES DEPARTMENT OF COMMERCE
United States Patent and Trademark Office
Address: COMMISSIONER FOR PATENTS
P.O. Box 1450
Alexandria, Virginia 22313-1450
www.uspto.gov

Robert D. Shedd, Patent Operations
THOMSON Licensing LLC
P.O. Box 5312
Princeton, NJ 08543-5312

Mail Date: 04/21/2010

Applicant	: Keith Robert Broerman	: DECISION ON REQUEST FOR
Patent Number	: 7587028	: RECALCULATION of PATENT
Issue Date	: 09/08/2009	: TERM ADJUSTMENT IN VIEW
Appliction No	: 10/533,978	: OF WYETH AND NOTICE OF INTENT TO
Filed	: 05/05/2005	: ISSUE CERTIFICATE OF CORRECTION
		:

The Request for Recalculation is **GRANTED** to the extent indicated.

The patent term adjustment has been determined to be **622** days. The USPTO will *sua sponte* issue a certificate of correction reflecting the amount of PTA days determined by the recalculation.

Prior to the issuance of the certificate of correction, the USPTO will afford patentee an opportunity to be heard and request reconsideration. Accordingly, patentee has **one month or thirty (30) days**, whichever is longer, to file a request for reconsideration of this patent term adjustment calculation. See 35 U.S.C. 154(b)(3)(B)(ii) and 37 CFR 1.322(a)(4). No extensions of time will be granted under 37 CFR 1.136.

Patentee should use document code PET.OP if electronically filing a request for reconsideration of this patent term adjustment calculation. The patentee must also include the information required by 37 CFR 1.705(b)(2) and the fee required by 37 CFR 1.18(e). If patentee does not file a timely request for reconsideration of this patent term adjustment calculation including the information required by 37 CFR 1.705(b)(2) and the fee required by 37 CFR 1.18(e), the USPTO will issue a certificate of correction reflecting the PTA determination noted above.

Patentee should be aware that in order to preserve the right to review in the United States District Court for the District of Columbia of the USPTO patent term adjustment determination, patentee must ensure that he or she also take the steps required under 35 U.S.C. 154(b)(4)(A) in a timely manner. Nothing in the request for recalculation should be construed as providing an alternative time frame for commencing a civil action under 35 U.S.C. 154(b)(4)(A).

Any questions concerning this decision should be directed to the Office of Patent Legal Administration at 571-272-7702.

UNITED STATES PATENT AND TRADEMARK OFFICE

UNITED STATES DEPARTMENT OF COMMERCE
United States Patent and Trademark Office
Address: COMMISSIONER FOR PATENTS
P.O. Box 1450
Alexandria, Virginia 22313-1450
www.uspto.gov

KNOBBE MARTENS OLSON & BEAR LLP
2040 MAIN STREET
FOURTEENTH FLOOR
IRVINE, CA 92614

Mail Date: 04/20/2010

Applicant	: Aharon Arakel	: DECISION ON REQUEST FOR
Patent Number	: 7595001	: RECALCULATION of PATENT
Issue Date	: 09/29/2009	: TERM ADJUSTMENT IN VIEW
Appliction No	: 10/533,980	: OF WYETH AND NOTICE OF INTENT TO
Filed	: 03/27/2006	: ISSUE CERTIFICATE OF CORRECTION
		:

The Request for Recalculation is **GRANTED** to the extent indicated.

The patent term adjustment has been determined to be **728** days. The USPTO will *sua sponte* issue a certificate of correction reflecting the amount of PTA days determined by the recalculation.

Prior to the issuance of the certificate of correction, the USPTO will afford patentee an opportunity to be heard and request reconsideration. Accordingly, patentee has **one month or thirty (30) days**, whichever is longer, to file a request for reconsideration of this patent term adjustment calculation. See 35 U.S.C. 154(b)(3)(B)(ii) and 37 CFR 1.322(a)(4). No extensions of time will be granted under 37 CFR 1.136.

Patentee should use document code PET.OP if electronically filing a request for reconsideration of this patent term adjustment calculation. The patentee must also include the information required by 37 CFR 1.705(b)(2) and the fee required by 37 CFR 1.18(e). If patentee does not file a timely request for reconsideration of this patent term adjustment calculation including the information required by 37 CFR 1.705(b)(2) and the fee required by 37 CFR 1.18(e), the USPTO will issue a certificate of correction reflecting the PTA determination noted above.

Patentee should be aware that in order to preserve the right to review in the United States District Court for the District of Columbia of the USPTO patent term adjustment determination, patentee must ensure that he or she also take the steps required under 35 U.S.C. 154(b)(4)(A) in a timely manner. Nothing in the request for recalculation should be construed as providing an alternative time frame for commencing a civil action under 35 U.S.C. 154(b)(4)(A).

Any questions concerning this decision should be directed to the Office of Patent Legal Administration at 571-272-7702.

UNITED STATES PATENT AND TRADEMARK OFFICE

UNITED STATES DEPARTMENT OF COMMERCE
United States Patent and Trademark Office
Address: COMMISSIONER FOR PATENTS
P.O. Box 1450
Alexandria, Virginia 22313-1450
www.uspto.gov

ALSTON & BIRD LLP
BANK OF AMERICA PLAZA
101 SOUTH TRYON STREET, SUITE 4000
CHARLOTTE, NC 28280-4000

Mail Date: 04/21/2010

Applicant	: Gregory Durand	: DECISION ON REQUEST FOR
Patent Number	: 7655251	: RECALCULATION of PATENT
Issue Date	: 02/02/2010	: TERM ADJUSTMENT IN VIEW
Appliction No	: 10/533,982	: OF WYETH AND NOTICE OF INTENT TO
Filed	: 10/24/2005	: ISSUE CERTIFICATE OF CORRECTION
		:

The Request for Recalculation is **GRANTED** to the extent indicated.

The patent term adjustment has been determined to be **872** days. The USPTO will *sua sponte* issue a certificate of correction reflecting the amount of PTA days determined by the recalculation.

Prior to the issuance of the certificate of correction, the USPTO will afford patentee an opportunity to be heard and request reconsideration. Accordingly, patentee has **one month or thirty (30) days**, whichever is longer, to file a request for reconsideration of this patent term adjustment calculation. See 35 U.S.C. 154(b)(3)(B)(ii) and 37 CFR 1.322(a)(4). No extensions of time will be granted under 37 CFR 1.136.

Patentee should use document code PET.OP if electronically filing a request for reconsideration of this patent term adjustment calculation. The patentee must also include the information required by 37 CFR 1.705(b)(2) and the fee required by 37 CFR 1.18(e). If patentee does not file a timely request for reconsideration of this patent term adjustment calculation including the information required by 37 CFR 1.705(b)(2) and the fee required by 37 CFR 1.18(e), the USPTO will issue a certificate of correction reflecting the PTA determination noted above.

Patentee should be aware that in order to preserve the right to review in the United States District Court for the District of Columbia of the USPTO patent term adjustment determination, patentee must ensure that he or she also take the steps required under 35 U.S.C. 154(b)(4)(A) in a timely manner. Nothing in the request for recalculation should be construed as providing an alternative time frame for commencing a civil action under 35 U.S.C. 154(b)(4)(A).

Any questions concerning this decision should be directed to the Office of Patent Legal Administration at 571-272-7702.

UNITED STATES PATENT AND TRADEMARK OFFICE

UNITED STATES DEPARTMENT OF COMMERCE
United States Patent and Trademark Office
Address: COMMISSIONER FOR PATENTS
P.O. Box 1450
Alexandria, Virginia 22313-1450
www.uspto.gov

ALSTON & BIRD LLP
BANK OF AMERICA PLAZA
101 SOUTH TRYON STREET, SUITE 4000
CHARLOTTE, NC 28280-4000

Mail Date: 05/18/2010

Applicant : Gregory Durand
Patent Number : 7655251
Issue Date : 02/02/2010
Application No : 10/533,982
Filed : 10/24/2005

: NOTICE CONCERNING IMPROPER
: CALCULATION OF PATENT TERM
: ADJUSTMENT BASED UPON USPTO
: IMPROPERLY MEASURING REDUCTION
: PERIOD UNDER 37 CFR 1.704(c)(10).

The United States Patent and Trademark Office (USPTO) discovered that in processing the recent recalculation decisions mailed in response to patentee's filed Request for Recalculation of Patent Term Adjustment in view of Wyeth, the USPTO improperly measured the reduction period for reductions under 37 CFR 1.704(c)(10). Pursuant to 37 CFR 1.704(c)(10), patentee's reduction begins on the date of filing the amendment under 37 CFR 1.312 ("1.312 amendment") or other related paper and ends on the date that the Office mails a response to the filing of the 1.312 amendment or other paper. It has been discovered that during the recalculation, the calculation failed to the limit the reduction to the mail date of the response to the 1.312 amendment or other paper. Accordingly, patentee's reductions were greater than warranted.

This notice **VACATES** the previous GRANTED request for recalculation and provides patentee with a revised GRANTED recalculation.

The patent term adjustment has been determined to be **984** days. The USPTO will *sua sponte* issue a certificate of correction reflecting the amount of patent term adjustment (PTA) days determined by the recalculation.

Prior to the issuance of the certificate of correction, the USPTO will afford patentee an opportunity to be heard and request reconsideration. Accordingly, patentee has **one month or thirty (30) days** from the mail date of this notice, whichever is longer, to file a request for reconsideration of this PTA calculation. See 35 U.S.C. § 154(b)(3)(B)(ii) and 37 CFR 1.322(a)(4).

Patentee should use document code PET.OP if electronically filing a request for reconsideration of this PTA calculation. The patentee must also include the information required by 37 CFR 1.705(b)(2), and the fee required by 37 CFR 1.18(e). If patentee does not file a timely request for reconsideration of this PTA calculation, including the information required by 37 CFR 1.705(b)(2) and the fee required by 37 CFR 1.18(e), the USPTO will issue a certificate of correction reflecting the PTA determination noted above.

Patentee should be aware that in order to preserve the right of review of the USPTO's PTA determination in the United States District Court for the District of Columbia, patentee must ensure that the steps required under 35 U.S.C. § 154 (b)(4) are taken in a timely manner. Nothing in the request for recalculation should be construed as providing an alternative time frame for commencing a civil action under 35 U.S.C. § 154(b)(4).

UNITED STATES PATENT AND TRADEMARK OFFICE

Commissioner for Patents
United States Patent and Trademark Office
P.O. Box 1450
Alexandria, VA 22313-1450
www.uspto.gov

CONNOLLY BOVE LODGE & HUTZ
PO Box 2207
Wilmington, DE 19899

30 MAY 2006

In re Application of:
ZIEGLER, Ursula, et al.
U.S. Application No.: 10/533,984
PCT No.: PCT/EP03/12210
International Filing Date: 03 November 2003
Priority Date: 05 November 2002
Atty Docket No.: 05587-00381-US
For: COMPOSITE MADE FROM PLOYACETAL, BONDING AGENT AND POLYOLEFIN, METHOD FOR PRODUCTION AND USE THEREOF

DECISION

This decision is issued in response to the "Request For Corrected Filing Receipt" filed 08 November 2005, treated herein as a petition under 37 CFR 1.181 to correct the 35 U.S.C. 371(c) date. No petition fee is required.

BACKGROUND

On 03 November 2003, applicants filed international application PCT/EP03/12210. The international application claimed a priority date of 05 November 200 and designated the United States. On 21 May 2004, the International Bureau (IB) communicated a copy of the international application to the United States Patent and Trademark Office (USPTO). The deadline for submitting the basic national fee was 05 May 2005, i.e., thirty months from the priority date.

On 05 May 2005, applicants filed a Transmittal Letter requesting entry into the U.S. national stage accompanied by, among other materials, payment of the basic national fee and a translation into English of the international application.

On 25 May 2005, applicants filed an executed declaration in compliance with 37 CFR 1.497 and the $130 surcharge for filing the declaration later than thirty months after the priority date.

On 03 October 2005, the United States Designated/Elected Office (DO/EO/US) mailed a "Notification Of Acceptance" (Form PCT/DO/EO/903) identifying the "Date Of Receipt Of 35 U.S.C. 371(c)(1), (c)(2) and (c)(4) Requirements " and the "Date Of Completion Of All U.S.C. 371 Requirements" as 05 May 2005. Also on 03 October 2005, a filing receipt was issued that identified the 35 U.S.C. 371(c) date as 05 May 2005.

On 08 November 2005, applicants filed the "Request For Corrected Filing Receipt" treated herein as a petition under 37 CFR 1.181. The petition includes a copy of the previously filed declaration, as well as a copy of a return postcard itemizing the declaration and bearing a USPTO receipt stamp dated 25 May 2005.

On 11 May 2006, the DO/EO/US mailed a second Notification Of Acceptance (Form PCT/DO/EO/905) that identifies the "Date Of Receipt Of 35 U.S.C. 371(c)(1), (c)(2) and (c)(4) Requirements " and the "Date Of Completion Of All U.S.C. 371 Requirements" as 25 May 2005. Also on 11 May 2006, a corrected filing receipt was issued that identified the 35 U.S.C. 371(c) date as 25 May 2005.

DISCUSSION

A review of the application file and the materials filed by applicant on 08 November 2005 confirms that the executed declaration completing the requirements of 35 U.S.C. 371(c)(1), (c)(2), and (c)(4) was filed herein on 25 May 2005. The Notification Of Acceptance and filing receipt mailed 03 October 2005, both of which identified the 35 U.S.C. 371(c) date as 05 May 2005, are therefore appropriately vacated.

As noted above, the corrected Notification Of Acceptance and filing receipt mailed 11 May 2006 both properly identify the 35 U.S.C. 371(c) date as 25 May 2005.

CONCLUSION

The petition under 37 CFR 1.181 to correct the 35 U.S.C. 371(c) date is **GRANTED**.

This application's date under 35 U.S.C. 371(c)(1), (c)(2), and (c)(4) has been corrected to 25 May 2005.

The Notification Of Acceptance and filing receipt mailed 03 October 2005, both of which identified the 35 U.S.C. 371(c) date as 05 May 2005, are hereby **VACATED**.

The Notification Of Acceptance and filing receipt mailed 11 May 2006, both of which properly identified the 35 U.S.C. 371(c) date as 25 May 2005, remain in effect.

Richard M. Ross
Attorney Advisor
Office of PCT Legal Administration
Telephone: (571) 272-3296
Facsimile: (571) 273-0459

0 5 JUN 2008

\United States Patent and Trademark Office

Commissioner for Patents
United States Patent and Trademark Office
P.O. Box 1450
Alexandria, VA 22313-1450
www.uspto.gov

AKERMAN SENTERFITT
P.O. BOX 3188
WEST PALM BEACH FL 33402-3188

In re Application of	:	
Duclos	:	
Application No.: 10/533,986	:	
PCT No.: PCT/CA04/01628	:	
Int. Filing Date: 03 September 2004	:	DECISION
Priority Date: 05 September 2003	:	
Attorney Docket No.: 789-89		:
For: Pendulum Actuated Gearing Mechanism And Power Generation System Using Same	:	

This is in response to the correspondence filed on 04 December 2006 and 28 March 2007, which is being treated as a petition under 37 CFR 1.181. No petition fee is required.

BACKGROUND

This international application was filed on 03 September 2004, claimed an earliest priority date of 05 September 2003, and designated the United States. The International Bureau transmitted a copy of the published international application to the USPTO on 17 March 2005. Consequently, the thirty month period for payment of the basic national fee in the United States expired as of midnight on 05 March 2006. On 05 May 2005, applicant filed *inter alia* the basic national fee.

On 28 February 2006, a Notification of Missing Requirements (Form PCT/DO/EO/905) was mailed to applicant, requiring the submission of an executed oath or declaration of the inventors in compliance with 37 CFR 1.497(a) and (b).

On 04 December 2006, applicant filed correspondence which included a declaration document.

On 29 January 2007, a Notice of Acceptance (Form PCT/DO/EO/903) was mailed to applicant, reflecting a date under 35 U.S.C. 371(c)(1), (2) and (4) of "12/04/2006." On the same date, a filing receipt was mailed to applicant, reflecting a "FILING or 371(c) DATE" of "12/04/2006."

DISCUSSION

Petitioner requests issuance of a corrected filing receipt and a corrected Notice of Acceptance on the basis that the "FILING or 371(c) DATE" of "12/04/2006" is incorrect. Review of the record reveals that the "Communication" filed on 04 December 2006 and signed by Atty. Steele was accompanied by "a copy of the Response to Notification of Missing Requirements filed on March 8, 2006, as well as the stamped return receipt postcard indicating that the Patent Office received our response on March 13, 2006." Inspection of said postcard receipt reveals that it is stamped as "Rec'd PCT/PTO 13 MAR 2006," that it bears an OIPE plug stamp with the same date, and that it itemizes *inter alia* a signed declaration. MPEP 503 states in part that

A postcard receipt which itemizes and properly identifies the items which are being filed serves as *prima facie* evidence of receipt in the USPTO of all the items listed thereon on the date stamped thereon by the USPTO.

Following the policy described at MPEP 503, the declaration filed on 04 December 2006 is being regarded as a copy of the declaration originally filed on 13 March 2006 and itemized on the postcard receipt. Inspection of the declaration reveals that it is suitable for purposes of compliance with 37 CFR 1.497(a) and (b). Accordingly, the date of completion of the requirements of 35 U.S.C. 371(c)(1), (2) and (4) was 13 March 2006. It is noted that the electronic records of the USPTO show that the $65.00 surcharge under 37 CFR 1.492(h) was filed on 13 March 2006. Therefore, it would be appropriate to grant the requested relief. In view of this, the Notice of Acceptance mailed on 29 January 2007, and the filing receipt issued the same date, were issued in error, and both are hereby **VACATED**.

DECISION

The petition is **GRANTED**.

This application is being forwarded to the Office of Patent Application Processing for further processing, including the preparation and mailing of a Notice of Acceptance (Form PCT/DO/EO/903) and of a corrected filing receipt, both reflecting a date under 35 U.S.C. 371(c)(1), (2) and (4) of **13 March 2006**.

/George Dombroske/
George Dombroske
PCT Legal Examiner
Office of PCT Legal Administration
Tel: (571) 272-3283
Fax: (571) 273-0459

UNITED STATES PATENT AND TRADEMARK OFFICE

Commissioner for Patents
United States Patent and Trademark Office
P.O. Box 1450
Alexandria, VA 22313-1450
www.uspto.gov

BOURQUE & ASSOCIATES
INTELLECTUAL PROPERTY ATTORNEYS, P.A.
835 HANOVER STREET
SUITE 301
MANCHESTER, NH 03104

COPY MAILED

MAR 3 1 2008

OFFICE OF PETITIONS

In re Application of	:	
Martin Clive-Smith	:	
Application No. 10/533,987	:	ON PETITION
Filed: May 4, 2005	:	
Attorney Docket No. TILLBRK-001XX	:	

This is a decision on the petition under 37 CFR 1.137(b), filed November 2, 2007, to revive the above-identified application.

The petition is **DISMISSED**.

A grantable petition under 37 CFR 1.137(b) must be accompanied by: (1) the required reply, unless previously filed; (2) the petition fee as set forth in 37 CFR 1.17(m); (3) a statement that the entire delay in filing the required reply from the due date for the reply until the filing of a grantable petition pursuant to 37 CFR 1.137(b) was unintentional; and (4) any terminal disclaimer (and fee as set forth in 37 CFR 1.20(d)) required by 37 CFR 1.137(d). Where there is a question as to whether either the abandonment or the delay in filing a petition under 37 CFR 1.137 was unintentional, the Commissioner may require additional information. See MPEP 711.03(c)(III)(C) and (D). The instant petition lacks item(s) (1).

The application became abandoned for failure to timely file a proper reply within the meaning of 37 CFR 1.113 to the final Office action mailed December 11, 2006. The proposed reply required for consideration of a petition to revive must be a Notice of Appeal (and appeal fee required by 37 CFR 41.20(b)(2)), an amendment that *prima facie* places the application in condition for allowance, a Request for Continued Examination (RCE) and submission (37 CFR 1.114), or the filing of a continuing application under 37 CFR 1.53(b). See MPEP 711.03(c)(III)(A)(2). Since the amendment submitted on November 2, 2007, does not *prima facie* place the application in condition for allowance, the reply required should be a Notice of Appeal (and appeal fee), RCE, or the filing of a continuing application under 37 CFR 1.53(b). A courtesy copy of the Advisory Action is being mailed with this decision on petition.

Any request for reconsideration of this decision must be submitted within **TWO (2) MONTHS** from the mail date of this decision. Extensions of time under 37 CFR 1.136(a) are permitted. The reconsideration request should include a cover letter entitled "Renewed Petition under 37 CFR 1.137(b)." This is **not** a final agency action within the meaning of 5 U.S.C. § 704.

Further correspondence with respect to this matter should be addressed as follows:

By mail: Mail Stop PETITION
Commissioner for Patents
P. O. Box 1450
Alexandria, VA 22313-1450

By hand: U. S. Patent and Trademark Office
Customer Service Window, Mail Stop Petitions
Randolph Building
401 Dulany Street
Alexandria, VA 22314

The centralized facsimile number is **(571) 273-8300.**

Telephone inquiries concerning this decision should be directed to the undersigned at (571) 272-3226.

Andrea Smith
Petitions Examiner
Office of Petitions

Enclosure: Courtesy Copy of the Advisory Action

Advisory Action Before the Filing of an Appeal Brief	Application No.	Applicant(s)	
	10/533,987	CLIVE-SMITH, MARTIN	
	Examiner	Art Unit	
	Hilary Gutman	3612	

--The MAILING DATE of this communication appears on the cover sheet with the correspondence address --

THE REPLY FILED 02 November 2007 FAILS TO PLACE THIS APPLICATION IN CONDITION FOR ALLOWANCE.

1. ☒ The reply was filed after a final rejection, but prior to or on the same day as filing a Notice of Appeal. To avoid abandonment of this application, applicant must timely file one of the following replies: (1) an amendment, affidavit, or other evidence, which places the application in condition for allowance; (2) a Notice of Appeal (with appeal fee) in compliance with 37 CFR 41.31; or (3) a Request for Continued Examination (RCE) in compliance with 37 CFR 1.114. The reply must be filed within one of the following time periods:
   a) ☒ The period for reply expires 3 months from the mailing date of the final rejection.
   b) ☐ The period for reply expires on: (1) the mailing date of this Advisory Action, or (2) the date set forth in the final rejection, whichever is later. In no event, however, will the statutory period for reply expire later than SIX MONTHS from the mailing date of the final rejection.
   Examiner Note: If box 1 is checked, check either box (a) or (b). ONLY CHECK BOX (b) WHEN THE FIRST REPLY WAS FILED WITHIN TWO MONTHS OF THE FINAL REJECTION. See MPEP 706.07(f).

Extensions of time may be obtained under 37 CFR 1.136(a). The date on which the petition under 37 CFR 1.136(a) and the appropriate extension fee have been filed is the date for purposes of determining the period of extension and the corresponding amount of the fee. The appropriate extension fee under 37 CFR 1.17(a) is calculated from: (1) the expiration date of the shortened statutory period for reply originally set in the final Office action; or (2) as set forth in (b) above, if checked. Any reply received by the Office later than three months after the mailing date of the final rejection, even if timely filed, may reduce any earned patent term adjustment. See 37 CFR 1.704(b).

NOTICE OF APPEAL

2. ☐ The Notice of Appeal was filed on _____. A brief in compliance with 37 CFR 41.37 must be filed within two months of the date of filing the Notice of Appeal (37 CFR 41.37(a)), or any extension thereof (37 CFR 41.37(e)), to avoid dismissal of the appeal. Since a Notice of Appeal has been filed, any reply must be filed within the time period set forth in 37 CFR 41.37(a).

AMENDMENTS

3. ☒ The proposed amendment(s) filed after a final rejection, but prior to the date of filing a brief, will not be entered because
   (a) ☐ They raise new issues that would require further consideration and/or search (see NOTE below);
   (b) ☐ They raise the issue of new matter (see NOTE below);
   (c) ☒ They are not deemed to place the application in better form for appeal by materially reducing or simplifying the issues for appeal; and/or
   (d) ☐ They present additional claims without canceling a corresponding number of finally rejected claims.
   NOTE: *no changes to the specification have been made*. (See 37 CFR 1.116 and 41.33(a)).
4. ☐ The amendments are not in compliance with 37 CFR 1.121. See attached Notice of Non-Compliant Amendment (PTOL-324).
5. ☐ Applicant's reply has overcome the following rejection(s): _____.
6. ☐ Newly proposed or amended claim(s) _____ would be allowable if submitted in a separate, timely filed amendment canceling the non-allowable claim(s).
7. ☐ For purposes of appeal, the proposed amendment(s): a) ☐ will not be entered, or b) ☐ will be entered and an explanation of how the new or amended claims would be rejected is provided below or appended.
   The status of the claim(s) is (or will be) as follows:
   Claim(s) allowed: *27-31,33-43 and 46*.
   Claim(s) objected to: _____.
   Claim(s) rejected: *44,45 and 47-53*.
   Claim(s) withdrawn from consideration: _____.

AFFIDAVIT OR OTHER EVIDENCE

8. ☐ The affidavit or other evidence filed after a final action, but before or on the date of filing a Notice of Appeal will not be entered because applicant failed to provide a showing of good and sufficient reasons why the affidavit or other evidence is necessary and was not earlier presented. See 37 CFR 1.116(e).
9. ☐ The affidavit or other evidence filed after the date of filing a Notice of Appeal, but prior to the date of filing a brief, will not be entered because the affidavit or other evidence failed to overcome all rejections under appeal and/or appellant fails to provide a showing a good and sufficient reasons why it is necessary and was not earlier presented. See 37 CFR 41.33(d)(1).
10. ☐ The affidavit or other evidence is entered. An explanation of the status of the claims after entry is below or attached.

REQUEST FOR RECONSIDERATION/OTHER

11. ☐ The request for reconsideration has been considered but does NOT place the application in condition for allowance because: _____.
12. ☐ Note the attached Information *Disclosure Statement*(s). (PTO/SB/08) Paper No(s). _____
13. ☐ Other: _____.

/Hilary Gutman/
Primary Examiner, Art Unit 3612

UNITED STATES PATENT AND TRADEMARK OFFICE

Commissioner for Patents
United States Patent and Trademark Office
P.O. Box 1450
Alexandria, VA 22313-1450
www.uspto.gov

BOURQUE & ASSOCIATES
INTELLECTUAL PROPERTY ATTORNEYS, P.A.
835 HANOVER STREET
SUITE 301
MANCHESTER, NH 03104

COPY MAILED

MAY 2 1 2008

OFFICE OF PETITIONS

In re Application of	:	
Martin Clive-Smith	:	
Application No. 10/533,987	:	ON PETITION
Filed: May 4, 2005	:	
Attorney Docket No. TILLBRK-001XX	:	

This is a decision on the renewed petition under 37 CFR 1.137(b), filed on May 6, 2008 and supplemented on May 8, 2008, to revive the above-identified application.

The Office acknowledges petitioner's request filed on May 8, 2008, to disregard the filing of the Request for Continued Examination (RCE) under 37 CFR 1.114 filed on May 6, 2008 and to re-consider the amendment filed on November 2, 2007[1].

Finance records show that petitioner submitted a petition fee of $255 on November 2, 2007. However, the fee for revival of an unintentionally abandoned application is $770. Unfortunately, the $255 fee cannot be adjusted. Therefore, that amount will be refunded back to petitioner's credit card and the correct petition fee of $770 will be charged to the deposit account, as authorized.

In view of the above, the petition satisfies the requirements of 37 CFR 1.137(b) in that petitioner has supplied (1) the reply in the form of an acceptable amendment; (2) the petition fee of $770; and (3) a proper statement of unintentional delay. Therefore, the petition is **GRANTED**.

This application file is being referred to Technology Center Art Unit 3612, for further processing.

Telephone inquiries concerning this decision should be directed to the undersigned at (571) 272-3226.

Andrea Smith
Petitions Examiner
Office of Petitions

[1] The RCE fee of $405 is unnecessary and will be credited to petitioner's credit card, in due course.

#6

UNITED STATES PATENT AND TRADEMARK OFFICE

Commissioner for Patents
United States Patent and Trademark Office
P.O. Box 1450
Alexandria, VA 22313-1450
www.uspto.gov

25 JAN 2006

Michael Bednarek
PILLSBURY WINTHROP SHAW PITTMAN LLP
1650 Tyson's Boulevard
McLean, VA 22102

In re Application of	:	
MIKHALTSEVITCH, Vassili, Timofeevitch, et al.	:	
U.S. Application No.: 10/534,024	:	DECISION ON PETITION
PCT No.: PCT/AU2003/001470	:	UNDER 37 CFR 1.182
International Filing Date: 06 November 2003	:	
Priority Date: 06 November 2002	:	
Attorney's Docket No.: WRA0012-US	:	
For: PROBE COIL FOR DETECTING NQR-	:	
RESPONSIVE MATERIALS IN LARGE	:	
VOLUMES	:	

This decision is issued in response to applicants' "Petition To Change Order Of Inventors In Pending Patent Application Under 37 CFR 1.182" filed 05 December 2005. No petition fee is required.

BACKGROUND

On 06 November 2003, applicants filed international application PCT/AU2003/001470 which claimed a priority date of 06 November 2002 and which designated the United States. On 21 May 2004, a copy of the international application was communicated to the United States Patent And Trademark Office ("USPTO") by the International Bureau ("IB"). The deadline for payment of the basic national fee was thirty months from the priority date, i.e., 06 May 2005.

On 06 May 2005, applicants filed a transmittal letter for entry into the national stage in the United States accompanied by, among other materials, payment of the basic national fee.

On 06 October 2005, the United States Designated/Elected Office (DO/EO/US) mailed a Notification of Missing Requirements 35 U.S.C. 371 (Form PCT/DO/EO/905) indicating that an oath or declaration in compliance with 37 CFR 1.497 and the surcharge for filing the oath or declaration later than thirty months after the priority date was required.

On 05 December 2005, applicants filed a response to the Notification Of Missing Requirements that included the required surcharge fee, an executed declaration in compliance with 37 CFR 1.497, and the petition considered herein.

DISCUSSION

Applicants' present petition requests that the applicants' names be listed in a specific order that differs from the order used in the international application. The requested order corresponds to the order in which the applicants are listed in the declaration filed herein on 05 December 2005. Pursuant to MPEP § 605.04(f), "[t]he order of names of joint patentees in the heading of the patent is taken from the order in which the typewritten names appear in the original oath or declaration." Accordingly, the present petition is moot, in that the requested order of inventors is the order that would be used by the USPTO pursuant to standard procedure.

CONCLUSION

Applicants' petition under 37 CFR 1.182 is **DISMISSED AS MOOT**.

The $130 petition fee submitted by applicants will be refunded to Deposit Account No. 03-3975.

The applicants' names herein will be entered in the order in which these applicants are listed on the declaration filed 05 December 2005 (an order that corresponds to the order requested in the present petition). Specifically, the applicants will be listed in the following requested order:

1. Vassili Timofeevitch MIKHALTSEVITCH
2. Taras Nikolaevitch RUDAKOV
3. Warrick Paul CHISHOLM
4. John Harold FLEXMAN
5. Peter Alaric HAYES

The application is being forwarded to the National Stage Processing Branch of the Office Of PCT Operations for further processing in accordance with this decision, including the entry of the applicants' names into the USPTO database in the order listed above. The date under 35 U.S.C. 371(c)(1), (c)(2), and (c)(4) is 05 December 2005.

Richard M. Ross
PCT Petitions Attorney
Office of PCT Legal Administration
Telephone: (571) 272-3296
Facsimile: (571) 273-0459

UNITED STATES PATENT AND TRADEMARK OFFICE

Commissioner for Patents
United States Patent and Trademark Office
P.O. Box 1450
Alexandria, VA 22313-1450
www.uspto.gov

Venable LLP
Raymond J. Ho
575 7th Street NW
Washington, DC 20004-1601

COPY MAILED

MAR 1 1 2009

OFFICE OF PETITIONS

In re Application of	:	
Shing-Tung Yau, et al.	:	
Application No. 10/534,035	:	DECISION ON PETITION
Filed: May 6, 2005	:	TO WITHDRAW
Attorney Docket No. 050106	:	FROM RECORD
	:	

This is a decision on the Request to Withdraw as attorney or agent of record under 37 C.F.R. § 1.36(b), filed October 24, 2008.

The request is **APPROVED**.

A grantable request to withdraw as attorney/agent of record must be signed by every attorney/agent seeking to withdraw or contain a clear indication that one attorney is signing on behalf of another/others. A request to withdraw will not be approved unless at least 30 (thirty) days would remain between the date of approval and the later of the expiration date of a time to file a response or the expiration date of the maximum time period which can be extended under 37 C.F.R. § 1.136(a).

The request was signed by Raymond J. Ho on behalf of all attorneys of record. All attorneys/agents have been withdrawn. Applicant is reminded that there is no attorney of record at this time.

The request to change the correspondence of record is not acceptable as the requested correspondence address is not that of: (1) the first named signing inventor; or (2) an intervening assignee of the entire interest under 37 C.F.R 3.71. All future communications from the Office will be directed to the first named signing inventor at the first copied address below until otherwise properly notified by the applicant.

There is an outstanding Office action mailed October 14, 2008 that requires a reply from the applicant.

Telephone inquiries concerning this decision should be directed to Terri Williams at 571-272-2991.

Terri Williams

Terri Williams
Petitions Examiner
Office of Petitions

cc: **Shing-Tung Yau**
64 Fifer Lane
Lexington, MA 02420

cc: **Geometric Informatics**
387 Somerville Avenue
Somerville, MA 02143

UNITED STATES PATENT AND TRADEMARK OFFICE

UNITED STATES DEPARTMENT OF COMMERCE
United States Patent and Trademark Office
Address: COMMISSIONER FOR PATENTS
P.O. Box 1450
Alexandria, Virginia 22313-1450
www.uspto.gov

APPLICATION NUMBER	FILING OR 371(C) DATE	FIRST NAMED APPLICANT	ATTY. DOCKET NO./TITLE
10/534,035	05/06/2005	Shing-Tung Yau	050106

CONFIRMATION NO. 9738

POWER OF ATTORNEY NOTICE

44920
Venable LLP
Raymond J. Ho
575 7th Street NW
Washington, DC 20004-1601

OC000000034940007

Date Mailed: 03/11/2009

NOTICE REGARDING CHANGE OF POWER OF ATTORNEY

This is in response to the Power of Attorney filed 10/24/2008.

- The withdrawal as attorney in this application has been accepted. Future correspondence will be mailed to the new address of record. 37 CFR 1.33.

/tswilliams/

Office of Data Management, Application Assistance Unit (571) 272-4000, or (571) 272-4200, or 1-888-786-0101

UNITED STATES PATENT AND TRADEMARK OFFICE

UNITED STATES DEPARTMENT OF COMMERCE
United States Patent and Trademark Office
Address: COMMISSIONER FOR PATENTS
P.O. Box 1450
Alexandria, Virginia 22313-1450
www.uspto.gov

YOUNG & THOMPSON
209 Madison Street
Suite 500
Alexandria, VA 22314

Mail Date: 04/20/2010

Applicant	: Herve Gombert	: DECISION ON REQUEST FOR
Patent Number	: 7591892	: RECALCULATION of PATENT
Issue Date	: 09/22/2009	: TERM ADJUSTMENT IN VIEW
Appliction No	: 10/534,037	: OF WYETH AND NOTICE OF INTENT TO
Filed	: 05/06/2005	: ISSUE CERTIFICATE OF CORRECTION
		:

The Request for Recalculation is **GRANTED** to the extent indicated.

The patent term adjustment has been determined to be **1143** days. The USPTO will *sua sponte* issue a certificate of correction reflecting the amount of PTA days determined by the recalculation.

Prior to the issuance of the certificate of correction, the USPTO will afford patentee an opportunity to be heard and request reconsideration. Accordingly, patentee has **one month or thirty (30) days**, whichever is longer, to file a request for reconsideration of this patent term adjustment calculation. See 35 U.S.C. 154(b)(3)(B)(ii) and 37 CFR 1.322(a)(4). No extensions of time will be granted under 37 CFR 1.136.

Patentee should use document code PET.OP if electronically filing a request for reconsideration of this patent term adjustment calculation. The patentee must also include the information required by 37 CFR 1.705(b)(2) and the fee required by 37 CFR 1.18(e). If patentee does not file a timely request for reconsideration of this patent term adjustment calculation including the information required by 37 CFR 1.705(b)(2) and the fee required by 37 CFR 1.18(e), the USPTO will issue a certificate of correction reflecting the PTA determination noted above.

Patentee should be aware that in order to preserve the right to review in the United States District Court for the District of Columbia of the USPTO patent term adjustment determination, patentee must ensure that he or she also take the steps required under 35 U.S.C. 154(b)(4)(A) in a timely manner. Nothing in the request for recalculation should be construed as providing an alternative time frame for commencing a civil action under 35 U.S.C. 154(b)(4)(A).

Any questions concerning this decision should be directed to the Office of Patent Legal Administration at 571-272-7702.

#3

United States Patent and Trademark Office

23 NOV 2005

Commissioner for Patents
United States Patent and Trademark Office
P.O. Box 1450
Alexandria, VA 22313-1450
www.uspto.gov

Lowe Hauptman & Berner, LLP
1700 Diagonal Road, Suite 300
Alexandria, VA 22314

In re Application of	:	
Collot et al.	:	
Application No.: 10/534,046	:	DECISION
PCT No.: PCT/FR02/04347	:	
Int. Filing Date: 13 December 2002	:	ON
Priority Date: 14 December 2001	:	
Attorney Docket No.: 4590-398	:	PETITION
For: Multipurpose Probe With Variable Sweep	:	

The petition to revive under 37 CFR 1.137(b) filed 06 May 2005 in the above-captioned application is hereby **GRANTED** as follows:

Applicant states that "the entire delay in filing the required reply from the due date for the required reply until the filing of a grantable petition under 37 CFR 1.137(b) was unintentional." This statement is being accepted in satisfaction of 37 CFR 1.137(b)(3).

A review of the application file reveals that the basic national fee of $300.00 was provided. The required petition fee of $1500.00 was also paid. Thus, the requirements of 37 CFR 1.137(b) have been satisfied. Therefore, the request to revive the application abandoned under 35 U.S.C. 371(d) is granted as to the National stage in the United States of America.

Counsel's Deposit Account No. 07-1337 is being charged in the amounts of $130.00 for the surcharge under 37 CFR 1.492(h) and $130.00 for the processing fee under 37 CFR 1.492(i), as authorized by the Transmittal Letter.

This application is being forwarded to the United States Designated/Elected Office for further processing. The date of the application under 35 U.S.C. 371(c)(1), (2) and (4) is **06 May 2005**.

Boris Milef
PCT Legal Examiner
PCT Legal Office

George M. Dombroske
PCT Legal Examiner
PCT Legal Office
Tel: (571) 272-3283
Fax: (571) 273-0459

UNITED STATES PATENT AND TRADEMARK OFFICE

UNITED STATES DEPARTMENT OF COMMERCE
United States Patent and Trademark Office
Address: COMMISSIONER FOR PATENTS
P.O. Box 1450
Alexandria, Virginia 22313-1450
www.uspto.gov

APPLICATION NO.	FILING DATE	FIRST NAMED INVENTOR	ATTORNEY DOCKET NO.	CONFIRMATION NO.
10/534,047	11/22/2005	Yoshiaki Kumamoto	271783US0PCT	2756

22850 7590 06/11/2010
OBLON, SPIVAK, MCCLELLAND MAIER & NEUSTADT, L.L.P.
1940 DUKE STREET
ALEXANDRIA, VA 22314

EXAMINER
FORTUNA, JOSE A

ART UNIT	PAPER NUMBER
1791	

NOTIFICATION DATE	DELIVERY MODE
06/11/2010	ELECTRONIC

Please find below and/or attached an Office communication concerning this application or proceeding.

The time period for reply, if any, is set in the attached communication.

Notice of the Office communication was sent electronically on above-indicated "Notification Date" to the following e-mail address(es):

patentdocket@oblon.com
oblonpat@oblon.com
jgardner@oblon.com

UNITED STATES PATENT AND TRADEMARK OFFICE

Commissioner for Patents
United States Patent and Trademark Office
P.O. Box 1450
Alexandria, VA 22313-1450
www.uspto.gov

JUN 11 2010

wk

Mailed :	:	
In re Application of	:	DECISION ON
Kumamoto et al.	:	PETITION
Serial No. 10/534,047	:	
Filed: November 22, 2005		
For: Molded Sheet		

This is a decision on the PETITION FILED UNDER 37 CFR 1.181 filed on April 2, 2010 to consider the CN 1196671 reference cited in Applicants' Information Disclosure Statement filed on October 26,2007. The Examiner lined through the reference on the IDS in the Office Action dated June 13, 2008. The basis for non-consideration was that there was neither a translation nor statement of relevancy. Applicants did provide along with this IDS submission a Chinese Office Action that cited this reference and an English translation of the action.

The requirement for a concise explanation of relevance is limited to information that is not in the English language. The explanation required is limited to the relevance as understood by the individual designated in 37 CFR 1.56(c) most knowledgeable about the content of the information at the time the information is submitted to the Office. Where the information listed is not in the English language, but was cited in a search report or other action by a foreign patent office in a counterpart foreign application, the requirement for a concise explanation of relevance can be satisfied by submitting an English-language version of the search report or action which indicates the degree of relevance found by the foreign office.

A review of the record indicates that Applicants did provide an English language version of the office action that lists the reference CN 1196671. However a review of that office action does not indicate the degree of relevance that was found by the foreign office in relating to that reference.

DECISION

Accordingly, the petition is **DENIED**.

/JACQUELINE STONE/

Jacqueline M. Stone, Director
Technology Center 1700
Chemical and Materials Engineering

Vincent K. Shier, Ph.D.
OBLON, SPIVAK, MCCLELLAND MAIER & NEUSTADT, L.L.P.
1940 DUKE STREET
ALEXANDRIA VA 22314

UNITED STATES PATENT AND TRADEMARK OFFICE

Commissioner for Patents
United States Patent and Trademark Office
P.O. Box 1450
Alexandria, VA 22313-1450
www.uspto.gov

MAILED

JAN 21 2010

OFFICE OF PETITIONS

The Webb Law Firm
436 Seventh Avenue
700 Koppers Building
Pittsburgh, PA 15219-1818

In re Application of
Mark Theodoor Verhaar, et. al.
Application No. 10/534,079
Filed: November 14, 2005
Attorney Docket No. 0470-051409

ON PETITION

This is a decision on the petition under 37 CFR 1.137(b), filed November 18, 2009, to revive the above-identified application.

The application became abandoned for failure to file a reply to the Restriction/Election Requirement mailed February 24, 2009. A Notice of Abandonment was mailed on October 23, 2009.

The petition satisfies the requirements of 37 CFR 1.137(b) in that petitioner has supplied (1) the reply in the form of an election; (2) the petition fee of $1,620; and (3) a proper statement of unintentional delay. Therefore, the petition is **GRANTED**.

This application file is being referred to Technology Center Art Unit 1612 for review of the response filed with the present petition.

Telephone inquiries concerning this decision should be directed to the undersigned at (571) 272-3226.

Andrea Smith
Petitions Examiner
Office of Petitions

#9

UNITED STATES PATENT AND TRADEMARK OFFICE

Commissioner for Patents
United States Patent and Trademark Office
P.O. Box 1450
Alexandria, VA 22313-1450
www.uspto.gov

17 APR 2007

David G. Conlin
Edwards, Angell, Palmer & Dodge, LLP
P.O. Box 55874
Boston, MA 02205

In re Application of	:	
FUKATSU, et al.	:	
U.S. Application No.: 10/534,081	:	DECISION ON PETITION
PCT No.: PCT/JP03/14139	:	
Int. Filing Date: 06 November 2003	:	UNDER 37 CFR 1.181
Priority Date: 08 November 2002	:	
Attorney Docket No.: 66530 (46590)	:	
For: RECEPTOR FUNCTION REGULATOR	:	

This decision is in response to applicant's petition under 37 CFR 1.181 to withdraw the holding of abandonment filed 10 October 2006 in the United States Patent and Trademark Office (USPTO).

BACKGROUND

On 06 November 2003, applicant filed international application PCT/JP03/14139, which claimed priority of an earlier application filed 08 November 2002. A copy of the international application was communicated to the United States Patent and Trademark Office from the International Bureau on 21 May 2004. The deadline for payment of the basic national fee in the United States was to expire 30 months from the priority date, 08 May 2005.

On 06 May 2005, applicant filed a transmittal letter for entry into the national stage in the United States, which was accompanied by payment of the full, U.S. basic national fee; an English translation of the international application as filed; an assignment document and a computer-readable form of the sequence listing.

On 13 June 2005, applicant filed a declaration of the inventors.

On 22 December 2005, applicant was mailed a NOTIFICATION TO COMPLY WITH REQUIREMENTS FOR PATENT APPLICATIONS CONTAINING NUCLEOTIDE AND/OR AMINO ACID SEQUENCE DISCLOSURES (Form PCT/DO/EO/922) informing applicant that a copy of the "Sequence Listing" in computer readable form which complied with 37 CFR 1.821-1.825 was required. Applicant was afforded two months to file a proper response.

On 25 September 2006, applicant was mailed a NOTIFICATION OF ABANDONMENT (Form PCT/DO/EO/909) informing applicant that applicant had failed to respond to the Form PCT/DO/EO/922 mailed 22 December 2005 within the time period set therein and that above-

identified application was abandoned as to the United States.

On 10 October 2006, applicant filed the present petition under 37 CFR 1.181 stating that a reply was faxed to the USPTO on 11 January 2006.

DISCUSSION

37 CFR 1.8(b) states:

> In the event that correspondence is considered timely filed by being mailed or transmitted in accordance with paragraph (a) of this section, but not received in the Patent and Trademark Office, and the application is held to be abandoned or the proceeding is dismissed, terminated, or decided with prejudice the correspondence will be considered timely filed if the party who forwarded the correspondence:
>
> (1) Informs the Office of the previous mailing or transmission of the correspondence promptly after becoming aware that the Office has no evidence of receipt of the correspondence;
>
> (2) Supplies an additional copy of the previously mailed or transmitted correspondence and certificate; and
>
> (3) Includes a statement which attests on a personal knowledge basis or to the satisfaction of the Commissioner to the previous timely mailing or transmission. If the correspondence was sent by facsimile transmission, a copy of the sending unit's report confirming transmission may be used to support this statement.

MPEP 711.03(c) details that as stated in 37 CFR 1.8(b)(3) the statement that attests to the previous timely mailing or transmission of the correspondence must be on a personal knowledge basis, or to the satisfaction of the Director of the USPTO. If the statement attesting to the previous timely mailing is not made by the person who signed the Certificate of Mailing (i.e., there is no personal knowledge basis), then the statement attesting to the previous timely mailing should include evidence that supports the conclusion that the correspondence was actually mailed (e.g., copies of a mailing log establishing that correspondence was mailed for that application). When the correspondence is shown to have been timely filed based on a certificate of mailing, the correspondence is entered into PALM with the actual date of receipt (i.e., the date that the duplicate copy of the papers was filed with the statement under 37 CFR 1.8).

While applicant has not provided a statement with firsthand knowledge of the fax

transmission, applicant has included a copy of the auto-reply facsimile transmission from the USPTO and counsel has attested that the presently filed materials are true copies of the papers originally faxed to the Office on 11 January 2006. Thus, applicant has satisfied items all three items above and it is proper to **GRANT** applicant's petition under 37 CFR 1.181 to withdraw the holding of abandonment.

CONCLUSION

For the reasons detailed above, applicant's petition under 37 CFR 1.181 is **GRANTED**.

The Form PCT/DO/EO/909 mailed 25 September 2006 is hereby **VACATED**.

This application is being returned to the United States National Stage processing division (US/DO/EO) for consideration of applicant's response including whether the response, while considered timely, was a proper response to the Form PCT/DO/EO/922 mailed 22 December 2005.

Derek A. Putonen
Attorney Advisor
Office of PCT Legal Administration
Tel: (571) 272-3294
Fax: (571) 273-0459

31 MAR 2006

UNITED STATES PATENT AND TRADEMARK OFFICE

Commissioner for Patents
United States Patent and Trademark Office
P.O. Box 1450
Alexandria, VA 22313-1450
www.uspto.gov

Robert M. Gamson
Armstrong Kratz
Intellectual Property Law Offices
502 Washington Avenue, Suite 220
Towson, MD 21204

In re Application of: NOTTE	:	
U.S. Application No.: 10/534,306	:	DECISION ON PETITION
PCT No.: PCT/EP03/12170	:	
International Filing Date: 30 October 2003	:	
Priority Date: 07 November 2002	:	
Attorney's Docket No.: 05124-PCT-PA	:	
For: HEAT TRANSFER FLUIDS FOR APPLICATION	:	
OVER A BROAD RANGE OF TEMPERATURES	:	

This decision is in response to applicant's petition filed with the United States Patent and Trademark Office (USPTO) on 30 January 2006. The petition is **GRANTED**.

On 09 May 2005, you filed in the USPTO papers requesting entry into the national phase of international application PCT/EP03/12170, filed 30 October 2003, entitled HEAT TRANSFER FLUIDS FOR APPLICATION OVER A BROAD RANGE OF TEMPERATURES. As detailed in the present petition, a different attorney has filed separate papers requesting entry into the national phase of international application PCT/EP03/12170. There can only be one U.S. national stage application for a given PCT international application. Thus, the filing of two national stage applications is improper.

As the inventor has filed separate papers requesting entry into the national phase of international application PCT/EP03/12170, it is proper to grant counsel's request to have the present application canceled. The US application number assigned to the application filed 06 May 2005 is 10/534,086. The papers that you filed on 09 May 2005 have been placed in application number 10/534,086. Since applicants have selected alternative representation for the prosecution of this application, no further communications with respect to this application will be mailed to you.

The fees paid on 09 May 2005 will be refunded to Deposit Account No.: 02-2839.

Derek A. Putonen
Attorney Advisor
Office of PCT Legal Administration
Tel: (571) 272-3294
Fax: (571) 273-0459

#5

UNITED STATES PATENT AND TRADEMARK OFFICE

Commissioner for Patents
United States Patent and Trademark Office
P.O. Box 1450
Alexandria, VA 22313-1450
www.uspto.gov

07 JUL 2006

Joseph M. Skerpon
Banner & Witcoff, Ltd.
1001 G Street, NW
Suite 1100
Washington, DC 20001

In re Application of	:	
NOTTE, et al.	:	
Application No.: 10/534,086	:	
PCT No.: PCT/EP02/12170	:	DECISION ON PAPERS
Int. Filing Date: 30 October 2003	:	
Priority Date: 07 November 2002	:	UNDER 37 CFR 1.42
Attorney Docket No.: 006832.00002	:	
For: HEAT TRANSFER FLUIDS FOR	:	
APPLICATION OVER A BROAD RANGE	:	
OF TEMPERATURES	:	

This application is before the Office of PCT Legal Administration for issues arising under 35 U.S.C. 371. The combined declaration and power of attorney filed 05 June 2006 is being treated as a request for status under 37 CFR 1.42. No petition fee is due.

BACKGROUND

On 30 October 2003, applicant filed international application PCT/EP02/12170, which claimed priority to an earlier application filed 07 November 2002. A copy of the international application was communicated to the United States Patent and Trademark Office from the International Bureau on 21 May 2004. Pursuant to 37 CFR 1.495, the thirty-month period for paying the basic national fee in the United States expired at midnight on 07 May 2005.

On 06 May 2005, applicant filed a transmittal letter for entry into the national stage in the United States which was accompanied by the requisite basic national fee as required by 35 U.S.C. 371(c)(1); a First Preliminary amendment and an Information Disclosure Statement.

On 05 June 2006, applicant filed an executed combined declaration and power of attorney.

DISCUSSION

37 CFR 1.42 When the Inventor is Dead, states, in part:

"In case of the death of the inventor, the legal representative (executor, administrator, etc.) of the deceased inventor may make the necessary oath or declaration, and apply for and

obtain the patent."

The declaration submitted on 05 June 2006 was executed by Dawn King Davidson as heiress of the estate of deceased inventor, David Lee Davidson. However, the filed declaration does not satisfy the requirements under 37 CFR 1.497(b). Specifically, the oath or declaration must provide the citizenship, residence, and mailing address of both the deceased inventor and the signing heiress. The present declaration only provides one set of information. In addition, in order to proceed with national stage processing a signed statement is required from either counsel or Dawn King Davidson stating that she is the sole heir to the estate. In addition, applicant is required to provide a statement that a legal representative has not been appointed nor is statutorily required to be appointed.

CONCLUSION

Applicant's petition under 37 CFR 1.42 is **DISMISSED, without prejudice**.

Applicant is hereby afforded **TWO (2) MONTHS** from the mail date of this decision to file an oath or declaration in compliance with 37 CFR 1.497 (a)-(b). Any reconsideration request should include a cover letter entitled, "Renewed Petition Under 37 CFR 1.42." No additional petition fee is required. Extensions of time may be obtained under 37 CFR 1.136(a).

Any further correspondence with respect to this matter should be directed to Mail Stop PCT, Commissioner for Patents, Office of PCT Legal Administration, P.O. Box 1450, Alexandria, Virginia 22313-1450, with the contents of the letter marked to the attention of the Office of PCT Legal Administration.

Derek A. Putonen
Attorney Advisor
Office of PCT Legal Administration
Tel: (571) 272-3294
Fax: (571) 273-0459

#7

UNITED STATES PATENT AND TRADEMARK OFFICE

Commissioner for Patents
United States Patent and Trademark Office
P.O. Box 1450
Alexandria, VA 22313-1450
www.uspto.gov

01 FEB 2007

Joseph M. Skerpon
Banner & Witcoff, Ltd.
1001 G Street, N.W.
Suite 1100
Washington, DC 20001

In re Application of NOTTE, et al. Application No.: 10/534,086 PCT No.: PCT/EP02/12170 Int. Filing Date: 30 October 2003 Priority Date: 07 November 2002 Attorney Docket No.: 006832.00002 For: HEAT TRANSFER FLUIDS FOR APPLICATION OVER A BROAD RANGE OF TEMPERATURES	DECISION ON RENEWED PETITION UNDER 37 CFR 1.42

This decision is in response to applicant's "Submission of Declaration Document" filed 31 October 2006 in the United States Patent and Trademark Office (USPTO). The submission is being treated as a renewed request for status pursuant to 37 CFR 1.42. No petition fee is required.

BACKGROUND

On 07 July 2006, applicant was mailed a decision dismissing applicant's request for status under 37 CFR 1.42. Applicant was afforded two months to file any request for reconsideration and advised that this period could be extended pursuant to 37 CFR 1.136(a).

On 31 October 2006, applicant filed the present response accompanied by a petition for a two-month extension of time and payment of the appropriate extension of time fee. Applicant's response is considered timely filed.

DISCUSSION

As detailed in the decision mailed 07 July 2006, 37 CFR 1.42 states:

"In case of the death of the inventor, the legal representative (executor, administrator, etc.) of the deceased inventor may make the necessary oath or declaration, and apply for and obtain a patent."

Applicant's previously filed declaration was rejected as it did not contain the residence, citizenship and post office address information for both the deceased inventor and the heir of his estate. Applicant has presently filed a combined declaration and power of attorney providing the

relevant information for both parties. However, the filed declaration does not comply with 37 CFR 1.497(a)(3) as it does not list the other two inventors of the application: Patrick Pierre Notte and John Joseph Tria. These inventors need not execute the new declaration as they executed the original declaration filed on 05 June 2006. However, the declaration executed by Ms. Davidson, providing her residence, citizenship and post office address information, and at a minimum, the citizenship of the deceased inventor, Mr. David Lee Davidson, must also list all of the inventors and their citizenship.

For example as discussed in MPEP 603:

Example 3: An application was filed with a declaration under 37 CFR 1.63 executed by inventors A, and B, and the legal representative of deceased inventor C. It is later determined that an error was made in the citizenship of deceased inventor C. A supplemental declaration identifying A, B, and C as the inventors would be required to be signed by the legal representative of deceased inventor C alone correcting C's citizenship.

CONCLUSION

Applicant's renewed petition under 37 CFR 1.42 is **DISMISSED.**

Applicant is hereby afforded **TWO (2) MONTHS** from the mail date of this decision to file an oath or declaration in compliance with 37 CFR 1.497 (a)-(b). Any reconsideration request should include a cover letter entitled, "Renewed Petition Under 37 CFR 1.42." No additional petition fee is required. Extensions of time may be obtained under 37 CFR 1.136(a).

Any further correspondence with respect to this matter should be directed to Mail Stop PCT, Commissioner for Patents, Office of PCT Legal Administration, P.O. Box 1450, Alexandria, Virginia 22313-1450, with the contents of the letter marked to the attention of the Office of PCT Legal Administration.

Derek A. Putonen
Attorney Advisor
Office of PCT Legal Administration
Tel: (571) 272-3294
Fax: (571) 273-0459

#9

UNITED STATES PATENT AND TRADEMARK OFFICE

Commissioner for Patents
United States Patent and Trademark Office
P.O. Box 1450
Alexandria, VA 22313-1450
www.uspto.gov

19 APR 2007

Joseph M. Skerpon
Banner & Witcoff, Ltd.
1001 G Street, NW
Suite 1100
Washington, DC 20001

In re Application of	:	
NOTTE, et al.	:	
Application No.: 10/534,086	:	
PCT No.: PCT/EP02/12170	:	DECISION ON PAPERS
Int. Filing Date: 30 October 2003	:	
Priority Date: 07 November 2002	:	UNDER 37 CFR 1.42
Attorney Docket No.: 006832.00002	:	
For: HEAT TRANSFER FLUIDS FOR	:	
APPLICATION OVER A BROAD RANGE	:	
OF TEMPERATURES	:	

This decision is in response to applicant's renewed petition under 37 CFR 1.42 filed 29 March 2007 in the United States Patent and Trademark Office (USPTO).

BACKGROUND

On 01 February 2007, applicant was mailed a decision dismissing applicant's request for status under 37 CFR 1.42. Applicant was afforded two months to file any request for reconsideration.

On 29 March 2007, applicant filed the present renewed petition.

DISCUSSION

37 CFR 1.42 When the Inventor is Dead, states, in part:

"In case of the death of the inventor, the legal representative (executor, administrator, etc.) of the deceased inventor may make the necessary oath or declaration, and apply for and obtain the patent."

The declaration submitted on 29 March 2007 is executed by Dawn King Davidson as heiress of the estate of deceased inventor, David Lee Davidson and provides the citizenship, residence, and mailing address of both the deceased inventor and the signing heiress. As such, it is proper to grant applicant's renewed petition at this time.

CONCLUSION

Applicant's renewed request for status under 37 CFR 1.42 is **GRANTED**.

This application has an international application filing date of 30 October 2003 and will be given a date of **29 March 2007** under 35 U.S.C. 371(c)(1), (c)(2) and (c)(4).

This application is being returned to the DO/EO/US for processing in accordance with this decision.

Derek A. Putonen
Attorney Advisor
Office of PCT Legal Administration
Tel: (571) 272-3294
Fax: (571) 273-0459

19 AUG 2005

#3

UNITED STATES PATENT AND TRADEMARK OFFICE

Commissioner for Patents
United States Patent and Trademark Office
P.O. Box 1450
Alexandria, VA 22313-1450
www.uspto.gov

FULBRIGHT & JAWORSKI LLP
600 CONGRESS AVENUE
SUITE 2400
AUSTIN, TX 78701

In re Application of	:	
DE CROMBRUGGHE et al.	:	
Application No.: 10/534,099	:	DECISION ON
PCT No.: PCT/US03/35139	:	
Int. Filing Date: 04 November 2003	:	PETITION UNDER
Priority Date: 04 November 2002	:	
Attorney Docket No.: UTSC:772US	:	37 CFR 1.137(b)
For: HA4,A NEW OSTEOBLAST-AND	:	
CHONDROCYTE-SPECIFIC SMALL SECRETED	:	
PEPTIDE, COMPOSITIONS AND METHODS OF USE	:	

This decision is in response to applicants' submission filed 06 May 2005.

BACKGROUND

On 04 November 2003, applicants filed international application PCT/US03/35139 which designated the U.S. and claimed a priority date of 04 November 2002. A copy of the international application was communicated to the United States Patent and Trademark Office (USPTO) from the International Bureau on 21 May 2004. The thirty-month period for paying the basic national fee in the United States expired at midnight on 04 April 2005.

On 06 May 2005, applicants filed a transmittal letter for entry into the national stage in the United States, which was accompanied by, *inter alia*, a petition under 37 CFR 1.137(b) to revive the application.

DISCUSSION

A petition to revive the present application under 37 CFR 1.137(b) must include:
(1) The required reply;
(2) The petition fee;
(3) A statement that the entire delay in filing the required reply from the due date for the reply until the filing of a grantable petition was unintentional.

As to item (1), applicant has failed to submit the required reply, the U.S. Basic National Fee.

As to item (2), applicant submitted the petition fee on 06 May 2005.

As to item (3), a grantable petition has not yet been filed.

CONCLUSION

The petition under 37 CFR 1.137(b) is **DISMISSED**, without prejudice, for the reasons set forth above.

If reconsideration on the merits of this petition is desired, a proper response must be filed within TWO (2) MONTHS from the mail date of this decision. Any reconsideration request should include a cover letter entitled "Renewed Petition Under 37 CFR 1.137(b)". Extensions of time may be obtained under 37 CFR 1.136(a).

Please direct further correspondence with respect to this matter to Mail Stop PCT, Commissioner for Patents, Office of PCT Legal Administration, P.O. Box 1450, Alexandria, Virginia 22313-1450, with the contents of the letter marked to the attention of the Office of PCT Legal Administration.

Daniel Stemmer
Legal Examiner
PCT Legal Affairs
Office of Patent Cooperation Treaty
Legal Administration
Telephone: (571) 272-3301
Facsimile: (571) 273-0459

#5

UNITED STATES PATENT AND TRADEMARK OFFICE

05 DEC 2005

Commissioner for Patents
United States Patent and Trademark Office
P.O. Box 1450
Alexandria, VA 22313-1450
www.uspto.gov

FULBRIGHT & JAWORSKI LLP
600 CONGRESS AVENUE
SUITE 2400
AUSTIN, TX 78701

In re Application of	:	
DE CROMBRUGGHE et al.	:	
Application No.: 10/534,099	:	DECISION ON
PCT No.: PCT/US03/35139	:	
Int. Filing Date: 04 November 2003	:	PETITION UNDER
Priority Date: 04 November 2002	:	
Attorney Docket No.: UTSC:772US	:	37 CFR 1.137(b)
For: HA4,A NEW OSTEOBLAST-AND	:	
CHONDROCYTE-SPECIFIC SMALL SECRETED	:	
PEPTIDE, COMPOSITIONS AND METHODS OF USE	:	

This decision is in response to applicants' submission filed 07 October 2005.

BACKGROUND

On 04 November 2003, applicants filed international application PCT/US03/35139 which designated the U.S. and claimed a priority date of 04 November 2002. A copy of the international application was communicated to the United States Patent and Trademark Office (USPTO) from the International Bureau on 21 May 2004. The thirty-month period for paying the basic national fee in the United States expired at midnight on 04 April 2005.

On 06 May 2005, applicants filed a transmittal letter for entry into the national stage in the United States, which was accompanied by, *inter alia*, a petition under 37 CFR 1.137(b) to revive the application.

On 19 August 2005, a decision was mailed dismissing applicants' petition under 37 CFR 1.137(b). Specifically, it was noted that applicants had failed to submit the required reply, namely the U.S. Basic National Fee.

On 07 October 2005, applicants filed the instant submission which was accompanied by, inter alia, the U.S. Basic National Fee.

DISCUSSION

A petition to revive the present application under 37 CFR 1.137(b) must include:
(1) The required reply;

(2) The petition fee;
(3) A statement that the entire delay in filing the required reply from the due date for the reply until the filing of a grantable petition was unintentional.

As to item (1), applicants submitted the U.S. Basic National Fee on 07 October 2005.

As to item (2), applicant submitted the petition fee on 06 May 2005.

As to item (3), the required statement has been provided.

CONCLUSION

The petition under 37 CFR 1.137(b) is **GRANTED** for the reasons set forth above.

This application is being forwarded to the National Stage Processing Branch of the Office of PCT Operations to continue national stage processing of the application including preparing and mailing a NOTIFICATION OF MISSING REQUIREMENTS (Form PCT/DO/EO/905) requiring an oath or declaration of the inventors in compliance with 37 CFR 1.497(a)-(b).

Daniel Stemmer
Legal Examiner
PCT Legal Affairs
Office of Patent Cooperation Treaty
Legal Administration
Telephone: (571) 272-3301
Facsimile: (571) 273-0459

23 FEB 2006

#8

UNITED STATES PATENT AND TRADEMARK OFFICE

23 FEB 2006

Commissioner for Patents
United States Patent and Trademark Office
P.O. Box 1450
Alexandria, VA 22313-1450
www.uspto.gov

NIXON PEABODY LLP
401 9th Street, NW
Suite 900
Washington, DC 20004-2128

In re Application of: AMATO, Tony U.S. Application No.: 10/534,124 PCT No.: PCT/GB2003/004826 International Filing Date: 07 November 2003 Priority Date: 08 November 2002 Attorney's Docket No.: 745691-39 For: ULTRASOUND APPARATUS AND THE MANUFACTURE THEREOF	DECISION ON REQUEST UNDER 37 CFR 1.497(d)

This decision is issued in response to applicant's 18 November 2005 response to the Notification Of Missing Requirements (Form PCT/DO/EO/905) mailed 14 November 2005, treated herein as a request under 37 CFR 1.497(d) to correct the inventorship in the present application. Deposit Account No. 19-2380 will be charged the required processing fee.

BACKGROUND

On 07 November 2003, applicant filed international application PCT/GB2003/004826 which claimed a priority date of 08 November 2002 and which designated the United States. On 21 May 2004, a copy of the international application was communicated to the United States Patent and Trademark Office (USPTO) by the International Bureau (IB). The deadline for submission of the basic national fee was thirty months from the priority date, i.e., 08 May 2005. The published international application identified a corporate applicant for all states other than the U.S., and a single applicant/inventor for the U.S., Tony AMATO.

On 06 May 2004, applicant filed a Transmittal Letter for entry into the national stage in the United States accompanied by, among other materials, payment of the basic national fee.

On 14 November 2005, the United States Designated/Elected Office (DO/EO/US) mailed a "Notification Of Missing Requirements" (Form PCT/DO/EO/905) indicating that an oath or declaration acceptable under 37 CFR 1.497 and the surcharge for filing the oath or declaration later than thirty months from the priority date were required.

On 18 November 2005, applicants filed the response to the Notification Of Missing Requirements considered herein. The response included the required surcharge payment and a declaration executed by two persons, both identified as inventors herein: Tony AMATO and

Michael John CRANE. The submission also included a "Statement Pursuant to 37 CFR 1.497(d)" executed by Michael John CRANE.

DISCUSSION

Where, as here, the filed declaration names additional inventors who were not identified on the international application, 37 CFR 1.497(d) requires applicant to submit: (1) a statement from each person being added as an inventor that any error in inventorship in the international application occurred without deceptive intent; (2) the processing fee; and (3) if an assignment has been executed by any of the original named inventors, the written consent of the consignee (in the form required by 37 CFR 3.73(b)).

Applicant here has submitted the required statement by the added inventor, Michael John CRANE. Item (1) is therefore satisfied.

The 18 November 2005 submission includes the authorization to charge Deposit Account No. 19-2380 for required fees. Based on this authorization, Deposit Account No. 19-2380 will be charged the required $130 processing fee. Item (2) is therefore satisfied.

Regarding item three, applicant has not submitted the assent of the assignee to the change of inventorship. No assignment has been recorded herein, but the Application Data Sheet (ADS) identifies Sonico Limited as the assignee. Before item (3) can be considered satisfied, applicant must provide the written consent of the assignee to the change of inventorship. Any such consent of the assignee must be accompanied by a proper statement under 37 CFR 3.73(b).

Based on the above, the present record does not satisfy all the requirements for correction of the inventorship under 37 CFR 1.497(d).

CONCLUSION

Applicant's request to correct inventorship under 37 CFR 1.497(d) is **DISMISSED** without prejudice.

Tony AMATO remains the sole inventor of record herein. Accordingly, the declaration filed 18 November 2005, which identifies both Mr. AMATO and Mr. CRANE as inventors, is defective at present for failure to properly identify the inventors of record herein.

If reconsideration on the merits of the petition is desired, a proper response must be filed within **TWO (2) MONTHS** of the mail date of the present decision. Any request for reconsideration should include a cover letter entitled "Renewed Request Under 37 CFR 1.497(d)" and must include the materials required to satisfy item (3) of a grantable request, as discussed above (i.e., the consent of the assignee in the form required by 37 CFR 3.73(b)).

Failure to file a proper response will result in abandonment of the application. Extensions of time are available under 37 CFR 1.136(a)

Please direct further correspondence with respect to this matter to Mail Stop PCT, Commissioner for Patents, Office of PCT Legal Administration, P.O. Box 1450, Alexandria, Virginia 22313-1450, with the contents of the letter marked to the attention of the Office of PCT Legal Administration.

Richard M. Ross
PCT Petitions Attorney
Office of PCT Legal Administration
Telephone: (571) 272-3296
Facsimile: (571) 273-0459

21 APR 2006

#18

UNITED STATES PATENT AND TRADEMARK OFFICE

Commissioner for Patents
United States Patent and Trademark Office
P.O. Box 1450
Alexandria, VA 22313-1450
www.uspto.gov

NIXON PEABODY LLP
401 9th Street, NW
Suite 900
Washington, DC 20004-2128

In re Application of: AMATO, Tony, et al. U.S. Application No.: 10/534,124 PCT No.: PCT/GB2003/004826 International Filing Date: 07 November 2003 Priority Date: 08 November 2002 Attorney's Docket No.: 745691-39 For: ULTRASOUND APPARATUS AND THE MANUFACTURE THEREOF	DECISION ON SECOND REQUEST UNDER 37 CFR 1.497(d)

This decision is in response to the "Renewed Request Under 37 CFR 1.497(d)" filed 20 April 2006 (and supplemented on 21 April 2006). No petition fee is required.

BACKGROUND

The procedural background for this application is set forth in detail in the decision mailed by this Office on 23 February 2006. In that decision, applicant's original request to add an inventor was dismissed without prejudice for failure to satisfy all the requirements of 37 CFR 1.497(d). Specifically, applicant had failed to provide the consent of the assignee.

On 20 April 2006, applicant filed the renewed petition considered herein (the renewed petition was supplemented with a copy of the relevant Assignment on 21 April 2006).

DISCUSSION

The renewed petition includes the consent of assignee Sonoco Limited to the addition of Michael John CRANE as an inventor herein. The consent is accompanied by a 'Statement Under 37 CFR 3.73(b) and a copy of the Assignment, as required.

This submission, in combination with the previously filed materials, satisfies the requirements set forth in 37 CFR 1.497(d). Accordingly, the request to add Michael John CRANE as an inventor is appropriately granted.

CONCLUSION

Applicant's renewed request under 37 CFR 1.497(d) is **GRANTED**.

Michael John CRANE is added as an inventor herein.

Based on the addition of this inventor, the declaration submitted by applicants on 18 November 2005 is in compliance with 37 CFR 1.497.

This application is being forwarded to the National Stage Processing Branch of the Office Of PCT Operations for further processing in accordance with this decision. The date under 35 U.S.C. 371(c)(1), (c)(2), and (c)(4) is 18 November 2005.

Richard M. Ross
Attorney Advisor
Office of PCT Legal Administration
Telephone: (571) 272-3296
Facsimile: (571) 273-0459

UNITED STATES PATENT AND TRADEMARK OFFICE

Commissioner for Patents
United States Patent and Trademark Office
P.O. Box 1450
Alexandria, VA 22313-1450
www.uspto.gov

RONALD E. GREIGG
GREIGG & GREIGG P.L.L.C.
1423 POWHATAN STREET, UNIT ONE
ALEXANDRIA VA 22314

COPY MAILED
NOV 0 4 2009
OFFICE OF PETITIONS

In re Application of	:	
Thorsten Mayer, et al.	:	
Application No. 10/534,125	:	DECISION ON PETITION
Filed: November 18, 2005	:	
Attorney Docket No. R.304250	:	

This is a decision on the petition under the unintentional provisions of 37 CFR 1.137(b), filed September 24, 2009, to revive the above-identified application.

The petition is **GRANTED**.

This application became abandoned for failure to timely pay the issue and publication fees on or before July 14, 2009, as required by the Notice of Allowance and Fee(s) Due, mailed April 14, 2009. Accordingly, the date of abandonment of this application is July 15, 2009. The Notice of Abandonment was mailed August 6, 2009.

The petition satisfies the requirements of 37 CFR 1.137(b) in that petitioner has supplied (1) the reply in the form of payment of the issue fee of $1,510 and the publication fee of $300, (2) the petition fee of $1,620; and (3) a proper statement of unintentional delay.

Telephone inquiries concerning this decision should be directed to Terri Johnson at (571) 272-2991.

This application is being referred to the Office of Data Management for processing into a patent.

Terri Johnson
Petitions Examiner
Office of Petitions

UNITED STATES PATENT AND TRADEMARK OFFICE

COMMISSIONER FOR PATENTS
UNITED STATES PATENT AND TRADEMARK OFFICE
P.O. BOX 1450
ALEXANDRIA, VA 22313-1450
www.uspto.gov

COPY MAILED

MAR 0 4 2008

OFFICE OF PETITIONS

HELLER EHRMAN LLP
1717 RHODE ISLAND AVE, NW
WASHINGTON, DC 20036-3001

In re Application of :
Ian Hector Frazer :
Application No. 10/534,130 : ON PETITION
Filed: December 30, 2005 :
Attorney Docket No. 21415-0015 :

This is a decision in response to the petition, filed November 21, 2007, to revive the above-identified application under the provisions of 37 CFR 1.137(b).

There is no indication that the person signing the instant petition was ever given a power of attorney or authorization of agent to prosecute the above-identified application. However, in accordance with 37 CFR 1.34(a), the signature of Paul M. Booth appearing on the petition shall constitute a representation to the United States Patent and Trademark Office that he is authorized to represent the particular party on whose behalf he acts. A courtesy copy of this decision is being mailed to petitioner. However, if Mr. Booth desires to receive future correspondence regarding this application, the appropriate power of attorney or authorization of agent must be submitted. All future correspondence regarding this application file will be directed solely to the address of record.

The petition is **GRANTED**.

The above-identified application became abandoned for failure to reply in a timely manner to the non-final Office action mailed April 4, 2007, which set a shortened statutory period for reply of one (1) month or thirty (30) days (whichever is later). No extension of time under the provisions of 37 CFR 1.136(a) was obtained. A Notice of Abandonment was mailed on October 18, 2007. In response, on November 21, 2007 the present petition was filed.

The petition satisfies the requirements of 37 CFR 1.137(b) in that petitioner has supplied (1) the response in the form of an election of the invention to be examined; (2) the petition fee of $1,540; and (3) an adequate statement of unintentional delay[1].

An extension of time under 37 CFR 1.136 must be filed prior to the expiration of the maximum extendable period for reply. *See* In re Application of S., 8 USPQ2d 1630, 1631 (Comm'r Pats. 1988). Since the $2,230 extension of time fee submitted with the petition on November 21, 2007

[1] 37 CFR 1.137(b)(3) requires a statement that the entire delay in filing the required reply from the due date for the reply until the filing of a grantable petition pursuant to 37 CFR 1.137(b) was unintentional. While it is not apparent whether the person signing the statement of unintentional delay was in a position to have firsthand or direct knowledge of the facts and circumstances of the delay at issue, such statement is being treated as having been made as the result of a reasonable inquiry into the facts and circumstances of such delay. See 37 CFR 10.18(b) and Changes to Patent Practice and Procedure; Final Rule Notice, 62 Fed. Reg. 53131, 53178 (October 10, 1997), 1203 Off. Gaz. Pat. Office 63, 103 (October 21, 1997). In the event that such an inquiry has not been made, petitioner must make such an inquiry. If such inquiry results in the discovery that it is not correct that the entire delay in filing the required reply from the due date for the reply until the filing of a grantable petition pursuant to 37 CFR 1.137(b) was unintentional, petitioner must notify the Office.

was subsequent to the maximum extendable period for reply, this fee is unnecessary and will be credited to petitioner's deposit account.

The application is being referred to Technology Center AU 1636 for consideration of the response filed November 21, 2007.

Telephone inquiries concerning this decision may be directed to the undersigned at (571) 272-3204. All other inquiries regarding this application should be directed to the Technology Center.

Sherry D. Brinkley
Petitions Examiner
Office of Petitions

cc: PAUL M. BOOTH
PROSKAUER ROSE LLP
1001 PENNSYLVANIA AVE, N.W.,
SUITE 400 SOUTH
WASHINGTON, DC 20004

UNITED STATES PATENT AND TRADEMARK OFFICE

Commissioner for Patents
United States Patent and Trademark Office
P.O. Box 1450
Alexandria, VA 22313-1450
www.uspto.gov

LAW OFFICE OF MICHAEL R. NICHOLS
3001 S. HARDIN BLVD. STE. 110
PMB #155
MCKINNEY TX 75070

COPY MAILED
SEP 15 2006
OFFICE OF PETITIONS

In re Application of	:	
Cohen, et al.	:	
Application No. 10/534,149	:	DECISION ON PETITION
Filed: November 14, 2005	:	TO WITHDRAW
Attorney Docket No. 2703-05-15	:	FROM RECORD
	:	

This is a decision on the Request to Withdraw as attorney or agent of record under 37 C.F.R. § 1.36(b), filed May 26, 2006.

The request is **APPROVED**.

A grantable request to withdraw as attorney/agent of record must be signed by every attorney/agent seeking to withdraw or contain a clear indication that one attorney is signing on behalf of another/others. A request to withdraw will not be approved unless at least 30 (thirty) days would remain between the date of approval and the later of the expiration date of a time to file a response or the expiration date of the maximum time period which can be extended under 37 C.F.R. § 1.136(a).

The request was signed by Michael R. Nichols on behalf of all attorneys of record who are associated with customer No. 30960.

All attorneys/agents associated with the Customer Number 30960 have been withdrawn.

Applicant is reminded that there is no attorney of record at this time.

All future correspondence will be directed to the first named inventor Israel Cohen at the address indicated below.

The request to change the correspondence of record is not acceptable as the requested correspondence address is not that of: (1) the first named signing inventor; or (2) an intervening assignee of the entire interest under 37 C.F.R 3.71. All future communications from the Office will be directed to the first named signing inventor at the first copied address below until otherwise properly notified by the applicant.

Telephone inquiries concerning this decision should be directed to April Wise at 571-272-1642.

April M. Wise
Petitions Examiner
Office of Petitions

cc: Israel Cohen
17 Lea Street
Haïfa, IL 34403

cc: ATTN: JAMES C. EVANS
BECK & TYSVER, PLLC,
2900 THOMAS AVENUE SOUTH
SUITE 100
MINNEAPOLIS, MN 55416

UNITED STATES PATENT AND TRADEMARK OFFICE

Commissioner for Patents
United States Patent and Trademark Office
P.O. Box 1450
Alexandria, VA 22313-1450
www.uspto.gov

DAVIDSON, DAVIDSON
& KAPPEL, LLC
485 7TH AVENUE
14TH FLOOR
NEW YORK NY 10018

COPY MAILED

SEP 21 2009

OFFICE OF PETITIONS

In re Application of :
Schaefer, et al. :
Application No. 10/534,151 :
Filed: 5 May, 2005 :
Attorney Docket No. 588.1046 :

DECISION

This is a decision on the petition filed on 15 June, 2009, for revival of an application abandoned due to unintentional delay under 37 C.F.R. §1.137(b).

The petition under 37 C.F.R. §1.137(b) is **GRANTED**.

As to the Allegations
of Unintentional Delay

The requirements of a grantable petition pursuant to 37 C.F.R. §1.137(b) are the petition and fee therefor, a reply, a proper statement of unintentional delay under the regulation, and, where applicable, a terminal disclaimer and fee. (However, it does not appear that a terminal disclaimer and fee are due here.)

Petitioners' attentions always are directed to the guidance in the Commentary at MPEP §711.03(c)(II).

BACKGROUND

The record reflects as follows:

Petitioner failed to reply timely and properly to the non-final Office action mailed on 8 August, 2008, with reply due absent extension of time on or before 8 November, 2008.

The application went abandoned by operation of law after midnight 8 November, 2008.

The Office mailed the Notice of Abandonment on 30 March, 2009.

On 15 June, 2009, Petitioner filed, *inter alia*, a petition (with fee) pursuant to 37 C.F.R. §1.137(b), with a reply in the form of an amendment and made the statement of unintentional delay.

Again, Petitioners' attentions always are directed to the guidance in the Commentary at MPEP §711.03(c)(II).

The availability of applications and application papers online to applicants/practitioners who diligently associate their Customer Number with the respective application(s) now provides an applicant/practitioner on-demand information as to events/transactions in an application.

Out of an abundance of caution, Petitioners always are reminded that those registered to practice and all others who make representations before the Office **must** inquire into the underlying facts of representations made to the Office and support averments with the appropriate documentation–since all owe to the Office the continuing duty to disclose.[1]

STATUTES, REGULATIONS AND ANALYSIS

Congress has authorized the Commissioner to "revive an application if the delay is shown to the satisfaction of the Commissioner to have been "unavoidable." 35 U.S.C. §133 (1994).[2]
The regulations at 37 C.F.R. §1.137(a) and (b) set forth the requirements for a Petitioner to revive a previously unavoidably or unintentionally, respectively, abandoned application under this congressional grant of authority.

Unintentional delays are those that do not satisfy the very strict statutory and regulatory requirements of unavoidable delay, and also, by definition, are not intentional.[3]))

As to Allegations of Unintentional Delay

The requirements of a grantable petition pursuant to 37 C.F.R. §1.137(b) are the petition and fee therefor, a reply, a proper statement of unintentional delay under the regulation, and, where applicable, a terminal disclaimer and fee.

---

[1] See supplement of 17 June, 1999. The Patent and Trademark Office is relying on petitioner's duty of candor and good faith and accepting a statement made by Petitioner. See Changes to Patent Practice and Procedure, 62 Fed. Reg. at 53160 and 53178, 1203 Off. Gaz. Pat. Office at 88 and 103 (responses to comments 64 and 109)(applicant obligated under 37 C.F.R. §10.18 to inquire into the underlying facts and circumstances when providing statements to the Patent and Trademark Office).

[2] 35 U.S.C. §133 provides:

35 U.S.C. §133 Time for prosecuting application.

Upon failure of the applicant to prosecute the application within six months after any action therein, of which notice has been given or mailed to the applicant, or within such shorter time, not less than thirty days, as fixed by the Commissioner in such action, the application shall be regarded as abandoned by the parties thereto, unless it be shown to the satisfaction of the Commissioner that such delay was unavoidable.

[3] Therefore, by example, an unintentional delay in the reply might occur if the reply and transmittal form are to be prepared for shipment by the US Postal Service, but other pressing matters distract one's attention and the mail is not timely deposited for shipment.

It appears that the requirements under 37 C.F.R. §1.137(b) have been satisfied.

CONCLUSION

Accordingly, the petition under 37 C.F.R. §1.137(b) is **granted**.

The instant application is released to the Technology Center/AU 3753 for further processing in due course.

Petitioner may find it beneficial to view Private PAIR within a fortnight of the instant decision to ensure that the revival has been acknowledged by the TC/AU in response to this decision. It is noted that all inquiries with regard to that change in status need be directed to the TC/AU where that change of status must be effected—that does not occur in the Office of Petitions.

Telephone inquiries regarding this decision may be directed to the undersigned at (571) 272-3214—it is noted, however, that all practice before the Office is in writing (see: 37 C.F.R. §1.2[4]) and the proper authority for action on any matter in this regard are the statutes (35 U.S.C.), regulations (37 C.F.R.) and the commentary on policy (MPEP). Therefore, no telephone discussion may be controlling or considered authority for Petitioner's action(s).

/John J. Gillon, Jr./
John J. Gillon, Jr.
Senior Attorney
Office of Petitions

[4] The regulations at 37 C.F.R. §1.2 provide:
§1.2 Business to be transacted in writing.
All business with the Patent and Trademark Office should be transacted in writing. The personal attendance of applicants or their attorneys or agents at the Patent and Trademark Office is unnecessary. The action of the Patent and Trademark Office will be based exclusively on the written record in the Office. No attention will be paid to any alleged oral promise, stipulation, or understanding in relation to which there is disagreement or doubt.

16 MAR 2006

UNITED STATES PATENT AND TRADEMARK OFFICE

Commissioner for Patents
United States Patent and Trademark Office
P.O. Box 1450
Alexandria, VA 22313-1450
www.uspto.gov

Kevin J. Canning
LAHIVE & COCKFIELD, LLP
28 State Street
Boston, MA 02109

In re Application of: NOORDERMEER, Leendert, J. U.S. Application No.: 10/534,154 PCT No.: PCT/EP2003/012072 International Filing Date: 28 October 2003 Priority Date: 04 November 2002 Atty Docket No.: DPQ-004US For: DISPLAY DEVICE COMPRISING A DEFLECTION UNIT AND A DERFLECTION UNIT FOR A DISPLAY DEVICE	DECISION ON PETITION TO CORRECT FILING DATE (37 CFR 1.10(c))

This decision is issued in response to the "Petition To Grant Original Filing Date Pursuant To 37 CFR 1.10" filed 02 June 2005. No petition fee is required.

BACKGROUND

On 28 October 2003, applicant filed international application PCT/EP2003/012072. The application claimed a priority date of 04 November 2002 and designated the United States. On 21 May 2004, the International Bureau (IB) communicated a copy of the international application was communicated to the United States Patent and Trademark Office (USPTO). The deadline for submission of the basic national fee was thirty months from the priority date, i.e., 04 May 2005.

In early May 2005, applicant filed via "Express Mail" a Transmittal Letter for entry into the national stage in the United States accompanied by, among other materials, the authorization to charge Deposit Account No. 12-0080 the basic national fee. The USPTO assigned the submission a filing date of 05 May 2005.

On 02 June 2005, applicant filed the petition considered herein. The petition asserts that the materials initiating the present national stage application were deposited with the USPS as "Express Mail" on 04 May 2005 and that, pursuant to 37 CFR 1.10(c), the materials should therefore be accorded a filing date of 04 May 2005.

DISCUSSION

The national stage materials filed by applicant in May 2005, including the authorization to charge Deposit Account No. 12-0080 for the basic national fee, were accompanied by a

"Certificate Of Express Mailing Under 37 CFR 1.10" that: (1) itemized the filed materials; (2) identified the "Express Mail" label number (EV466147325US); and (3) identified the date the "Express Mail" envelope was deposited with the USPS (04 May 2005). The present petition includes a copy of the customer receipt for "Express Mail" number EV466147325US. This receipt bears the docket number of the present application, a "date in" of 04 May 2005, and a USPS stamp dated 04 May 2005. In addition, USPS tracking data for this "Express Mail" number confirms that the USPS accepted the "Express Mail" envelope on 04 May 2005.

Based on applicant's statements in the present petition, the copy of the "Express Mail" label, and the USPS tracking data, it is concluded that the materials filed by applicant to initiate the present national stage application (including the payment of the basic national fee) were deposited with the USPS as "Express Mail" on 04 May 2005. Pursuant to 37 CFR 1.10(c), these materials are properly accorded a filing date of 04 May 2005.

It is noted that the corrected filing date of 04 May 2005 is prior to the expiration of thirty months from the priority date.

CONCLUSION

Applicant's petition under 37 CFR 1.10(c) is **GRANTED**.

The correspondence initiating the present international application, including the authorization to charge Deposit Account No. 12-0080 the basic national fee, will be accorded a filing date of 04 May 2005, prior to the expiration of thirty months from the priority date.

The application is being referred to the National Stage Processing Branch of the Office of PCT Operations for further processing in accordance with this decision, including correcting the filing date of the basic national fee and accompanying materials for **04 May 2005**, and mailing a Notification Of Missing Requirements (Form PCT/DO/EO/905) requiring submission of an oath or declaration in compliance with 37 CFR 1.497.

Richard M. Ross
Attorney Advisor
Office of PCT Legal Administration
Telephone: (571) 272-3296
Facsimile: (571) 273-0459

UNITED STATES PATENT AND TRADEMARK OFFICE

Commissioner for Patents
United States Patent and Trademark Office
P.O. Box 1450
Alexandria, VA 22313-1450
www.uspto.gov

20 SEP 2006

Milton Geller
225 Metcalfe Street
Suite 700
Ottawa ON K2P 1P9 CA CANADA

In re Application of DAGENAIS et al.
Application No.: 10/534,183
PCT No.: PCT/CA03/00595
Int. Filing: 30 April 2004
Priority Date: 30 April 2003
Attorney Docket No.: FARR-07.PCT/US
For: POWER TONG WITH SLIDING JAW

DECISION ON

PETITION TO REVIVE

UNDER 37 CFR 1.137(b)

This is a decision on applicant's petition to revive under 37 CFR 1.137(b) filed 06 May 2005 in the above-captioned application. This is also responsive to applicant's status inquiries dated 20 February and 29 August 2006. The petition to revive is hereby **GRANTED** as follows:

Applicant's statement that the "entire delay in filing the required reply from the due date for the required reply until the filing of a grantable petition under 37 CFR 1.137(b) was unintentional" meets the requirements of 37 CFR 1.137(b)(3).

A review of the application file reveals that the basic national fee of $150 has been provided. The required petition fee of $750 was also paid. Thus, the requirements of 37 CFR 1.137(b) have been satisfied. Therefore, the request to revive the application abandoned under 35 U.S.C. 371(d) is granted as to the National stage in the United States of America.

This application is being forwarded to the United States Designated/Elected Office for further processing. The 35 U.S.C. 371(c)(1), (c)(2) and (c)(4) date is **06 May 2005.**

Cynthia M. Kratz

Cynthia M. Kratz
Attorney Advisor
PCT Legal Office
Office of PCT Legal Administration

Telephone: (571) 272-3286
Facsimile: (571) 273-0459

UNITED STATES PATENT AND TRADEMARK OFFICE

UNITED STATES DEPARTMENT OF COMMERCE
United States Patent and Trademark Office
Address: COMMISSIONER FOR PATENTS
P.O. Box 1450
Alexandria, Virginia 22313-1450
www.uspto.gov

MCDONNELL BOEHNEN HULBERT & BERGHOFF LLP
300 S. WACKER DRIVE
32ND FLOOR
CHICAGO, IL 60606

Mail Date: 04/21/2010

Applicant	: Richard J. Jenny	: DECISION ON REQUEST FOR
Patent Number	: 7604932	: RECALCULATION of PATENT
Issue Date	: 10/20/2009	: TERM ADJUSTMENT IN VIEW
Appliction No	: 10/534,187	: OF WYETH AND NOTICE OF INTENT TO
Filed	: 11/09/2005	: ISSUE CERTIFICATE OF CORRECTION
		:

The Request for Recalculation is **GRANTED** to the extent indicated.

The patent term adjustment has been determined to be **688** days. The USPTO will *sua sponte* issue a certificate of correction reflecting the amount of PTA days determined by the recalculation.

Prior to the issuance of the certificate of correction, the USPTO will afford patentee an opportunity to be heard and request reconsideration. Accordingly, patentee has **one month or thirty (30) days**, whichever is longer, to file a request for reconsideration of this patent term adjustment calculation. See 35 U.S.C. 154(b)(3)(B)(ii) and 37 CFR 1.322(a)(4). No extensions of time will be granted under 37 CFR 1.136.

Patentee should use document code PET.OP if electronically filing a request for reconsideration of this patent term adjustment calculation. The patentee must also include the information required by 37 CFR 1.705(b)(2) and the fee required by 37 CFR 1.18(e). If patentee does not file a timely request for reconsideration of this patent term adjustment calculation including the information required by 37 CFR 1.705(b)(2) and the fee required by 37 CFR 1.18(e), the USPTO will issue a certificate of correction reflecting the PTA determination noted above.

Patentee should be aware that in order to preserve the right to review in the United States District Court for the District of Columbia of the USPTO patent term adjustment determination, patentee must ensure that he or she also take the steps required under 35 U.S.C. 154(b)(4)(A) in a timely manner. Nothing in the request for recalculation should be construed as providing an alternative time frame for commencing a civil action under 35 U.S.C. 154(b)(4)(A).

Any questions concerning this decision should be directed to the Office of Patent Legal Administration at 571-272-7702.

SPE RESPONSE FOR CERTIFICATE OF CORRECTION

Paper No.: _____

DATE : March 3, 2008

TO SPE OF : ART UNIT 3742

SUBJECT : Request for Certificate of Correction for Appl. No. 10/534195 patent no7263283

Please respond to this request for a certificate of correction within 7 days.

Please review the requested changes/corrections as shown in the **COCIN** document(s) in the IFW application image. No new matter should be introduced, nor should the scope or meaning of the claims be changed.

Please complete the response (see below) and forward the completed response to scanning using document code **COCX**.

Magdalene Talley

Certificates of Correction Branch

703-308-9390 ext. 116

Thank You For Your Assistance

The request for issuing the above-identified correction(s) is hereby:

Note your decision on the appropriate box.

- ☒ **Approved** — All changes apply.
- ☐ **Approved in Part** — Specify below which changes **do not** apply.
- ☐ **Denied** — State the reasons for denial below.

Comments: _____

VP 6-10-08

SPE

3742

Art Unit

United States Patent and Trademark Office

Commissioner for Patents
United States Patent and Trademark Office
P.O. Box 1450
Alexandria, VA 22313-1450
www.uspto.gov

27 SEP 2006

Monique A Morneault
Wallenstein Wagner & Rockey
311 South Wacker Drive 5300
Chicago IL 60606

In re Application of	:	
O'Regan et al.	:	
Application No.: 10/534,206	:	DECISION
PCT No.: PCT/IE03/00150	:	
Int. Filing Date: 06 November 2003	:	ON
Priority Date: 07 November 2002	:	
Attorney Docket No.: 3583 P 007	:	PETITION
For: System For Billing Rating	:	
And Selection Of Accounts	:	

This is in response to the petition under 37 CFR 1.47(a) filed on 30 January 2006.

BACKGROUND

This international application was filed on 06 November 2003, claimed an earlier priority date of 07 November 2002, and designated the U.S. The International Bureau transmitted a copy of the published international application to the USPTO on 21 May 2004. The 30 month time period for paying the basic national fee in the United States expired at midnight on 09 May 2005 (since 07 May 2005 was a Saturday). Applicants filed *inter alia* the basic national fee on 06 May 2005.

On 28 November 2005, a Notification of Missing Requirements (Form PCT/DO/EO/905) was mailed to applicants, requiring the submission of an executed oath or declaration.

DISCUSSION

A petition under 37 CFR 1.47(a) must be accompanied by (1) the fee under 37 CFR 1.17(h), (2) factual proof that the missing joint inventor refuses to execute the application or cannot be reached after diligent effort, (3) a statement of the last known address of the missing inventor, and (4) an oath or declaration by each 37 CFR 1.47(a) applicant on his or her own behalf and on behalf of the non-signing joint inventor.

Regarding requirement (1), petitioner paid the petition fee on 30 January 2006.

Regarding requirement (2), petitioner urges that the absence on the declaration of the signature of joint inventor Robert Mullins be excused because "as of the date of this petition, there is no indication that Mr. Mullins is willing to sign the Declaration." Counsel's attention is respectfully drawn to MPEP 409.03(d), which states in part:

> A refusal by an inventor to sign an oath or declaration when the inventor has not been presented with the application papers does not itself suggest that the inventor is refusing to join the application unless it is clear that the inventor understands exactly what he or she is being asked to sign and refuses to accept the application

> papers. A copy of the application papers should be sent to the last known address of the nonsigning inventor, or, if the nonsigning inventor is represented by counsel, to the address of the nonsigning inventor's attorney. The fact that an application may contain proprietary information does not relieve the 37 CFR 1.47 applicant of the responsibility to present the application papers to the inventor if the inventor is willing to receive the papers in order to sign the oath or declaration. It is noted that the inventor may obtain a complete copy of the application, unless the inventor has assigned his or her interest in the application, and the assignee has requested that the inventor not be permitted access. See MPEP § 106. It is reasonable to require that the inventor be presented with the application papers before a petition under 37 CFR 1.47 is granted since such a procedure ensures that the inventor is apprised of the application to which the oath or declaration is directed. In re Gray, 115 USPQ 80 (Comm'r Pat. 1956).
>
> Where a refusal of the inventor to sign the application papers is alleged, the circumstances of the presentation of the application papers and of the refusal must be specified in a statement of facts by the person who presented the inventor with the application papers and/or to whom the refusal was made. Statements by a party not present when an oral refusal is made will not be accepted. Proof that a bona fide attempt was made to present a copy of the application papers (specification, including claims, drawings, and oath or declaration) to the nonsigning inventor for signature, but the inventor refused to accept delivery of the papers or expressly stated that the application papers should not be sent, may be sufficient. When there is an express oral refusal, that fact along with the time and place of the refusal must be stated in the statement of facts. When there is an express written refusal, a copy of the document evidencing that refusal must be made part of the statement of facts. The document may be redacted to remove material not related to the inventor's reasons for refusal. When it is concluded by the 37 CFR 1.47 applicant that a nonsigning inventor's conduct constitutes a refusal, all facts upon which that conclusion is based should be stated in the statement of facts in support of the petition or directly in the petition. If there is documentary evidence to support facts alleged in the petition or in any statement of facts, such evidence should be submitted. Whenever a nonsigning inventor gives a reason for refusing to sign the application oath or declaration, that reason should be stated in the petition

Counsel suggests that Mr. Mullins is "unavailable" to execute the declaration, and alludes to a written "refusal" by Mr. Mullins (allegedly appearing in e-mail correspondence to a Jo Wall). However, counsel has not furnished a copy of such e-mail correspondence; instead, it is merely referenced by the petition and by the attached copy of a letter sent to Mr. Mullins dated 12 December 2005. Given the highly probative nature of such evidence, petitioner is required to furnish a copy of the e-mail correspondence in question. Moreover, the evidence of record does not show that a complete copy of the application papers was provided to Mr. Mullins for his consideration in deciding whether to execute the declaration. Thus, Mr. Mullins' alleged failure to respond to the letter of 12 December 2005 does not constitute a refusal to execute the oath or declaration within the meaning of 37 CFR 1.47(a).

Regarding requirement (3), the petition includes a statement the last known address of Mr. Mullins. Accordingly, requirement (3) has been satisfied.

Regarding requirement (4), the petition is accompanied by declaration documents signed by joint inventors Michael O'Regan and Ian Deakin on behalf of themselves and non-signing joint inventor Robert Mullins. Inspection of the document signed by Michael O'Regan reveals that it is defective because there has been an uninitialed and undated change to his residential address;

therefore, it is unclear whether the change was made after he signed the declaration. Moreover, due to said change, the declaration does not include an indication of the country where his residential and mailing addresses are located. Therefore, requirement (4) has not been satisfied.

DECISION

The petition under 37 CFR 1.47(a) is **DISMISSED**, without prejudice.

If reconsideration on the merits of this petition is desired, a proper response must be filed within **TWO (2) MONTHS** from the mail date of this decision. Any reconsideration request should include a cover letter entitled "Renewed Petition Under 37 CFR 1.47." No additional petition fee is required. Extensions of time may be obtained under 37 CFR 1.136(a). Failure to timely file a proper response will result in **ABANDONMENT**.

Please direct any further correspondence with respect to this matter to the Assistant Commissioner for Patents, Mail Stop PCT, P.O. Box 1450, Alexandria, VA 22313-1450, and address the contents of the letter to the attention of the PCT Legal Office.

Richard Cole
PCT Legal Examiner
Office of PCT Legal Administration

George M. Dombroske
PCT Legal Examiner
Office of PCT Legal Administration
Tel: (571) 272-3283
Fax: (571) 273-0459

United States Patent and Trademark Office

0 5 MAR 2007

Commissioner for Patents
United States Patent and Trademark Office
P.O. Box 1450
Alexandria, VA 22313-1450
www.uspto.gov

MCDERMOTT, WILL & EMERY LLP
227 WEST MONROE STREET
CHICAGO, IL 60606-5096

In re Application of	:	
O'Regan et al.	:	
Application No.: 10/534,206	:	DECISION
PCT No.: PCT/IE03/00150	:	
Int. Filing Date: 06 November 2003	:	ON
Priority Date: 07 November 2002	:	
Attorney Docket No.: 3583 P 007	:	PETITION
For: System For Billing Rating	:	
And Selection Of Accounts	:	

This is in response to the renewed petition under 37 CFR 1.47(a) filed on 26 January 2007.

DISCUSSION

In a Decision mailed on 27 September 2006, the petition under 37 CFR 1.47(a) filed on 30 January 2006 was dismissed without prejudice because

> Counsel suggests that Mr. Mullins is "unavailable" to execute the declaration, and alludes to a written "refusal" by Mr. Mullins (allegedly appearing in e-mail correspondence to a Jo Wall). However, counsel has not furnished a copy of such e-mail correspondence; instead, it is merely referenced by the petition and by the attached copy of a letter sent to Mr. Mullins dated 12 December 2005. Given the highly probative nature of such evidence, petitioner is required to furnish a copy of the e-mail correspondence in question. Moreover, the evidence of record does not show that a complete copy of the application papers was provided to Mr. Mullins for his consideration in deciding whether to execute the declaration. Thus, Mr. Mullins' alleged failure to respond to the letter of 12 December 2005 does not constitute a refusal to execute the oath or declaration within the meaning of 37 CFR 1.47(a).
>
> Regarding requirement (4), the petition is accompanied by declaration documents signed by joint inventors Michael O'Regan and Ian Deakin on behalf of themselves and non-signing joint inventor Robert Mullins. Inspection of the document signed by Michael O'Regan reveals that it is defective because there has been an uninitialed and undated change to his residential address; therefore, it is unclear whether the change was made after he signed the declaration. Moreover, due to said change, the declaration does not include an indication of the country where his residential and mailing addresses are located. Therefore, requirement (4) has not been satisfied.

In response, petitioner has furnished additional evidence purporting to show that Mr. Mullins refused to execute the declaration, including a declaration made by Jo Wall on 16 January 2007 and supporting documentation, including emails from Mr. Mullins. However, the record still does not clearly show that Mr. Mullins was presented with a complete copy of <u>this</u> application prior to the alleged refusal to execute the application. The letter to Mr. Mullins dated 21 November 2006 refers to a "copy of the published PCT Patent Specification." but the

specific international application number of the application sent to Mr. Mullins is not specified. Moreover, it is not clear whether a complete copy was sent, or just a "Specification" (i.e., description, without claims, drawings or abstract). In addition, the letter suggests that the "Specification" was sent by Michael Lucey rather than by Jo Wall, but petitioner has not provided a statement by Mr. Lucey describing his first-hand knowledge of the circumstances surrounding the transmittal of the "Specification." As noted in the Decision mailed on 27 September 2006, MPEP 409.03(d) states that a proper showing of "refusal" requires proof that a bona fide attempt was made to present a complete copy of the application papers to the non-signing inventor. Since this point has not been proven, requirement (2) still has not been met.

Petitioner has also provided a new declaration of inventorship signed by Michael O'Regan. This declaration cures the defects noted in the previous decision; as such, requirement (4) has now been satisfied.

DECISION

The petition under 37 CFR 1.47(a) is **DISMISSED**, without prejudice.

If reconsideration on the merits of this petition is desired, a proper response must be filed within **TWO (2) MONTHS** from the mail date of this decision. Any reconsideration request should include a cover letter entitled "Renewed Petition Under 37 CFR 1.47." No additional petition fee is required. Extensions of time may be obtained under 37 CFR 1.136(a). Failure to timely file a proper response will result in **ABANDONMENT**.

Please direct any further correspondence with respect to this matter to the Assistant Commissioner for Patents, Mail Stop PCT, P.O. Box 1450, Alexandria, VA 22313-1450, and address the contents of the letter to the attention of the Office of PCT Legal Administration.

George Dombroske
PCT Legal Examiner
Office of PCT Legal Administration
Tel: (571) 272-3283
Fax: (571) 273-0459

United States Patent and Trademark Office

Commissioner for Patents
United States Patent and Trademark Office
P.O. Box 1450
Alexandria, VA 22313-1450
www.uspto.gov

MCDERMOTT, WILL & EMERY LLP
227 WEST MONROE STREET
CHICAGO, IL 60606-5096

0 9 JUL 2007

In re Application of	:	
O'Regan et al.	:	
Application No.: 10/534,206	:	DECISION
PCT No.: PCT/IE03/00150	:	
Int. Filing Date: 06 November 2003	:	ON
Priority Date: 07 November 2002	:	
Attorney Docket No.: 3583 P 007	:	PETITION
For: System For Billing Rating	:	
And Selection Of Accounts	:	

This is in response to the renewed petition under 37 CFR 1.47(a) filed on 07 May 2007.

DISCUSSION

In a Decision mailed on 05 March 2007, the renewed petition under 37 CFR 1.47(a) filed on 26 January 2007 was dismissed without prejudice because

> In response, petitioner has furnished additional evidence purporting to show that Mr. Mullins refused to execute the declaration, including a declaration made by Jo Wall on 16 January 2007 and supporting documentation, including emails from Mr. Mullins. However, the record still does not clearly show that Mr. Mullins was presented with a complete copy of this application prior to the alleged refusal to execute the application. The letter to Mr. Mullins dated 21 November 2006 refers to a "copy of the published PCT Patent Specification." but the specific international application number of the application sent to Mr. Mullins is not specified. Moreover, it is not clear whether a complete copy was sent, or just a "Specification" (i.e., description, without claims, drawings or abstract). In addition, the letter suggests that the "Specification" was sent by Michael Lucey rather than by Jo Wall, but petitioner has not provided a statement by Mr. Lucey describing his first-hand knowledge of the circumstances surrounding the transmittal of the "Specification." As noted in the Decision mailed on 27 September 2006, MPEP 409.03(d) states that a proper showing of "refusal" requires proof that a bona fide attempt was made to present a complete copy of the application papers to the non-signing inventor. Since this point has not been proven, requirement (2) still has not been met.

In response, petitioner provides a statement by Michael Lucey, dated 02 May 2007, indicating that "the specification mentioned in my letter of 21 November 2006 contained the application papers as filed at the USPTO," and that "on the 18 April 2007 I sent a further letter containing the application papers as filed at the USPTO to the Inventor Mr. Robert Mullins by DHL courier. I enclose a statement confirming the shipment was delivered on April 24 2007 as evidence. Although the accompanying copy of a letter from Mr. Lucey to Mr. Mullins, dated 18 April 2007, does not explicitly list the drawings as among the application papers, consideration of the evidence as a whole supports the conclusion that Mr. Mullins was provided with a copy of the application as filed, and that he was aware of the contents of the application he was being asked to execute.

Mr. Lucey's statement dated 02 May 2007 further indicates that

> In a telephone discussion on 1 May 2007 Mr. Robert Mullins informed me that he was unwilling to execute the declaration unless he received a €5,000 payment in return. This position re-affirms the stance Mr. Mullins had taken in email correspondence with Jo Wall in late 2005.

Mr. Lucey's account of Mr. Mullins' express oral refusal, taken in concert with the totality of the other evidence made of record, is sufficient to establish that Mr. Mullins has in fact refused to execute the application. As such, requirement (2) has now been satisfied.

DECISION

The petition under 37 CFR 1.47(a) is **GRANTED**.

As provided in 37 CFR 1.47(a), a notice of the filing of this application will be forwarded to the non-signing inventor at his last known address of record.

A notice of the filing of the application under 37 CFR 1.47(a) will be published in the Official Gazette.

The application is being returned to the National Stage Processing Branch for processing as the U.S. National Stage of the above-identified international application. Its date under 35 U.S.C. 371(c)(1), (2) and (4) is **26 January 2007**.

George Dombroske
PCT Legal Examiner
Office of PCT Legal Administration
Tel: (571) 272-3283
Fax: (571) 273-0459

United States Patent and Trademark Office

Commissioner for Patents
United States Patent and Trademark Office
P.O. Box 1450
Alexandria, VA 22313-1450
www.uspto.gov

OFFICIAL GAZETTE NOTICE

37 CFR 1.47 Notice by Publication

Notice is hereby given of the filing of an application with a petition under 37 CFR 1.47 requesting acceptance of the application without the signature of a joint inventor. The petition has been granted. A notice has been sent to the last known address of the non-signing inventor. The inventor whose signature is missing (Robert MULLINS) may join in the application by promptly filing an appropriate oath or declaration complying with 37 CFR 1.63. The international application number is PCT/IE2003/000150 and was filed on November 6, 2003 in the names of Michael O'REGAN, Ian DEAKIN and Robert MULLINS for the invention entitled SYSTEM FOR BILLING RATING AND SELECTION OF ACCOUNTS. The national stage application number is 10/534,206 and has a 35 U.S.C. 371(c)(1), (2) and (4) date of January 26, 2007.

23 FEB 2006

#7

UNITED STATES PATENT AND TRADEMARK OFFICE

Commissioner for Patents
United States Patent and Trademark Office
P.O. Box 1450
Alexandria, VA 22313-1450
www.uspto.gov

Intellectual Property Law Offices of
Joel Voelzke
400 Corporate Pointe, Suite 300
Culver City, CA 90230

In re Application of
FINN et al.
U.S. Application No. 10/534,222
PCT No.: PCT/AU03/01480
It. Filing Date: 10 November 2003
Priority Date: 08 November 2002
Attorney Docket No.: 123-002
For: A DISTILLATION UNIT AND A METHOD OF DISTILLATION

DECISION ON PETITION

This decision is in response to "Petition under 37 CFR 1.47(a) Regarding Non-Signing Inventor" filed 28 October 2005 (and 15 December 2005) to accept the application without the signature of joint-inventor, John Barry Finn.

BACKGROUND

On 10 November 2003, applicants filed international application PCT/AU03/01480, which claimed priority of an earlier application filed 08 November 2002. A copy of the international application was communicated to the United States Patent and Trademark Office from the International Bureau on 21 May 2004. Pursuant to 37 CFR 1.495, the deadline for payment of the basic national fee in the United States was to expire 30 months from the priority date, 08 May 2005.

On 06 May 2005 applicants filed a transmittal letter for entry into the national stage in the United States, which accompanied by, inter alia: the requisite basic national fee as required by 35 U.S.C. 371(c)(1); a copy of the international application; and an information disclosure statement.

On 21 October 2005, the United Stated Designated/Elected Office mailed a Notification of Missing Requirements under 35 U.S.C. 371 (Form PCT/DO/EO/905) indicating that an oath or declaration in compliance with 37 CFR 1.497(a) and (b) must be filed. The notification set a two-month time limit in which to respond.

On 28 October 2005 and 15 December 2005, applicants filed a petition under 37 CFR 1.47(a).

DISCUSSION

A petition under 37 CFR 1.47(a) must be accompanied by: (1) the fee under 37 CFR 1.17, (2) factual proof that the missing joint inventor refuses to execute the application or cannot be reached after diligent effort, (3) a statement of the last known address of the missing inventor, and (4) an oath or declaration by each 37 CFR 1.47(a) applicant on his or her own behalf and behalf of the nonsigning joint inventor. Items (1), (3), and (4) have been satisfied.

Regarding item (2) above, petitioner states that John Barry Finn has refused to sign the application. Section 409.03(d) of the Manual of Patent Examining Procedure (M.P.E.P.), **Proof of Unavailability or Refusal**, states, in part:

> Where a refusal of the inventor to sign the application papers is alleged, the circumstances of the presentation of the application papers and of the refusal must be specified in a statement of facts by the person who presented the inventor with the application papers and/or to whom the refusal was made. Statements by a party not present when an oral refusal is made will not be accepted.
>
> Proof that a bona fide attempt was made to present a copy of the application papers (specification, including claims, drawings, and oath or declaration) to the nonsigning inventor for signature, but the inventor refused to accept delivery of the papers or expressly stated that the application papers should not be sent, may be sufficient. When there is an express oral refusal, that fact along with the time and place of the refusal must be stated in the statement of facts. When there is an express written refusal, a copy of the document evidencing that refusal must be made part of the statement of facts. The document may be redacted to remove material not related to the inventor's reasons for refusal.
>
> When it is concluded by the 37 CFR 1.47 applicant that a nonsigning inventor's conduct constitutes a refusal, all facts upon which that conclusion is based should be stated in the statement of facts in support of the petition or directly in the petition. If there is documentary evidence to support facts alleged in the petition or in any statement of facts, such evidence should be submitted. Whenever a nonsigning inventor gives a reason for refusing to sign the application oath or declaration, that reason should be stated in the petition.

A review of the present petition reveals that petitioner has not shown that a bona fide attempt was made to present the application papers (specification, claims, drawings, and oath/declaration) to John Barry Finn. The declaration of Brian Douglas Jenkins states that "Mr. Finn has ceased being an active Director of H20 Holdings and refuses to sign the inventor's declaration for this application." However, no documentary evidence to support the refusal or the attempt was provided with Mr. Jenkins's declaration.

As stated above, where a refusal of the inventor to sign the application papers is alleged, a statement of facts is needed from a person having first hand knowledge of the facts that a complete copy of the application papers (specification, claims, drawings, and oath/declaration) were sent to John Barry Finn, and when such papers were sent. In addition, copies of documentary evidence such as a certified mail return receipt, cover letter of instruction, telegrams, etc., should be supplied with the declaration.

For the reasons stated above, it would not be appropriate to accept the application without the signature of John Barry Finn under 37 CFR 1.47(a) at this time.

CONCLUSION

The petition under 37 CFR 1.47(a) is **DISMISSED** without prejudice.

If reconsideration on the merits of this petition is desired, a proper response must be filed within **TWO (2) MONTHS** from the mail date of this decision. Any reconsideration request should include a cover letter entitled "Renewed Petition Under 37 CFR 1.47(a)." No additional petition fee is required.

Any further correspondence with respect to this matter should be addressed to: Mail Stop PCT, Commissioner for Patents, Office of PCT Legal Administration, P.O. Box 1450, Alexandria, Virginia 22313-1450, with the contents of the letter marked to the attention of the Office of PCT Legal Administration.

Anthony Smith
Attorney-Advisor
Office of PCT Legal Administration
Tel.: (571) 272-3298
Fax: (571) 273-0459

14 JUL 2006

#9

UNITED STATES PATENT AND TRADEMARK OFFICE

Commissioner for Patents
United States Patent and Trademark Office
P.O. Box 1450
Alexandria, VA 22313-1450
www.uspto.gov

Intellectual Property Law Offices of
Joel Voelzke
400 Corporate Pointe, Suite 300
Culver City, CA 90230

In re Application of
FINN et al.
U.S. Application No. 10/534,222
PCT No.: PCT/AU03/01480
It. Filing Date: 10 November 2003
Priority Date: 08 November 2002
Attorney Docket No.: 123-002
For: A DISTILLATION UNIT AND A METHOD OF DISTILLATION

DECISION ON PETITION

This decision is issued in response to applicants' "Renewed Petition under 37 CFR 1.47(a)" filed 27 June 2006 to accept the application without the signature of joint-inventor, John Barry Finn.

BACKGROUND

On 10 November 2003, applicants filed international application PCT/AU03/01480, which claimed priority of an earlier application filed 08 November 2002. A copy of the international application was communicated to the United States Patent and Trademark Office from the International Bureau on 21 May 2004. Pursuant to 37 CFR 1.495, the deadline for payment of the basic national fee in the United States was to expire 30 months from the priority date, 08 May 2005.

On 06 May 2005 applicants filed a transmittal letter for entry into the national stage in the United States, which accompanied by, inter alia: the requisite basic national fee as required by 35 U.S.C. 371(c)(1); a copy of the international application; and an information disclosure statement.

On 21 October 2005, the United Stated Designated/Elected Office mailed a Notification of Missing Requirements under 35 U.S.C. 371 (Form PCT/DO/EO/905) indicating that an oath or declaration in compliance with 37 CFR 1.497(a) and (b) must be filed. The notification set a two-month time limit in which to respond.

On 28 October 2005 and 15 December 2005, applicants filed a petition under 37 CFR 1.47(a). In a decision dated 23 February 2006, applicants' petition under 37 CFR 1.47(a) was dismissed without prejudice.

On 27 June 2006, applicant filed the present renewed petition under 37 CFR 1.47(a).

DISCUSSION

A petition under 37 CFR 1.47(a) must be accompanied by: (1) the fee under 37 CFR 1.17, (2) factual proof that the missing joint inventor refuses to execute the application or cannot be reached after diligent effort, (3) a statement of the last known address of the missing inventor, and (4) an oath or declaration by each 37 CFR 1.47(a) applicant on his or her own behalf and behalf of the nonsigning joint inventor. Items (1), (3), and (4) have been satisfied.

Regarding item (2) above, petitioner states that John Barry Finn has refused to sign the application. Section 409.03(d) of the Manual of Patent Examining Procedure (M.P.E.P.), **Proof of Unavailability or Refusal**, states, in part:

> Where a refusal of the inventor to sign the application papers is alleged, the circumstances of the presentation of the application papers and of the refusal must be specified in a statement of facts by the person who presented the inventor with the application papers and/or to whom the refusal was made. Statements by a party not present when an oral refusal is made will not be accepted.
>
> Proof that a bona fide attempt was made to present a copy of the application papers (specification, including claims, drawings, and oath or declaration) to the nonsigning inventor for signature, but the inventor refused to accept delivery of the papers or expressly stated that the application papers should not be sent, may be sufficient. When there is an express oral refusal, that fact along with the time and place of the refusal must be stated in the statement of facts. When there is an express written refusal, a copy of the document evidencing that refusal must be made part of the statement of facts. The document may be redacted to remove material not related to the inventor's reasons for refusal.
>
> When it is concluded by the 37 CFR 1.47 applicant that a nonsigning inventor's conduct constitutes a refusal, all facts upon which that conclusion is based should be stated in the statement of facts in support of the petition or directly in the petition. If there is documentary evidence to support facts alleged in the petition or in any statement of facts, such evidence should be submitted. Whenever a nonsigning inventor gives a reason for refusing to sign the application oath or declaration, that reason should be stated in the petition.

A review of the present petition reveals that petitioner has not shown that a bona fide attempt was made to present the application papers (specification, claims, drawings, and oath/declaration) to John Barry Finn. The declaration of Phillip Pluck states that John Barry Finn refused to execute the inventor's declaration in a telephone conversation dated 09 June 2006. However, it is unclear from the present petition and accompanying

documents whether John Barry Finn has been presented with a complete copy of the application papers (specification, claims, drawings, and oath/declaration) as required. Lastly, the declarations of Brian Douglas Jenkins and Phillip Pluck fail to provide the circumstances of the presentation of the application papers to John Barry Finn.

As stated above, where a refusal of the inventor to sign the application papers is alleged, a statement of facts is needed from a person having first hand knowledge of the facts that a complete copy of the application papers (specification, claims, drawings, and oath/declaration) were sent to John Barry Finn, and when such papers were sent. In addition, copies of documentary evidence such as a certified mail return receipt, cover letter of instruction, telegrams, etc., should be supplied with the declaration.

For the reasons stated above, it would not be appropriate to accept the application without the signature of John Barry Finn under 37 CFR 1.47(a) at this time.

CONCLUSION

The petition under 37 CFR 1.47(a) is **DISMISSED** without prejudice.

If reconsideration on the merits of this petition is desired, a proper response must be filed within **TWO (2) MONTHS** from the mail date of this decision. Any reconsideration request should include a cover letter entitled "Renewed Petition Under 37 CFR 1.47(a)." No additional petition fee is required.

Any further correspondence with respect to this matter should be addressed to: Mail Stop PCT, Commissioner for Patents, Office of PCT Legal Administration, P.O. Box 1450, Alexandria, Virginia 22313-1450, with the contents of the letter marked to the attention of the Office of PCT Legal Administration.

Anthony Smith
Attorney-Advisor
Office of PCT Legal Administration
Tel.: (571) 272-3298
Fax: (571) 273-0459

#11

UNITED STATES PATENT AND TRADEMARK OFFICE

Commissioner for Patents
United States Patent and Trademark Office
P.O. Box 1450
Alexandria, VA 22313-1450
www.uspto.gov

13 SEP 2006

Intellectual Property Law Offices of
Joel Voelzke
400 Corporate Pointe, Suite 300
Culver City, CA 90230

In re Application of
FINN et al.
U.S. Application No. 10/534,222
PCT No.: PCT/AU03/01480
It. Filing Date: 10 November 2003
Priority Date: 08 November 2002
Attorney Docket No.: 123-002
For: A DISTILLATION UNIT AND A METHOD OF DISTILLATION

DECISION ON PETITION

This decision is issued in response to applicants' "Renewed Petition under 37 CFR 1.47(a)" filed 23 August 2006 to accept the application without the signature of joint-inventor, John Barry Finn.

BACKGROUND

On 10 November 2003, applicants filed international application PCT/AU03/01480, which claimed priority of an earlier application filed 08 November 2002. A copy of the international application was communicated to the United States Patent and Trademark Office from the International Bureau on 21 May 2004. Pursuant to 37 CFR 1.495, the deadline for payment of the basic national fee in the United States was to expire 30 months from the priority date, 08 May 2005.

On 06 May 2005 applicants filed a transmittal letter for entry into the national stage in the United States, which accompanied by, inter alia: the requisite basic national fee as required by 35 U.S.C. 371(c)(1); a copy of the international application; and an information disclosure statement.

On 21 October 2005, the United Stated Designated/Elected Office mailed a Notification of Missing Requirements under 35 U.S.C. 371 (Form PCT/DO/EO/905) indicating that an oath or declaration in compliance with 37 CFR 1.497(a) and (b) must be filed. The notification set a two-month time limit in which to respond.

On 28 October 2005 and 15 December 2005, applicants filed a petition under 37 CFR 1.47(a). In a decision dated 23 February 2006, applicants' petition under 37 CFR 1.47(a) was dismissed without prejudice.

On 27 June 2006, applicants filed the present renewed petition under 37 CFR 1.47(a). In a decision dated 14 July 2006, applicants' petition under 37 CFR 1.47(a) was

dismissed without prejudice.

On 23 August 2006, applicants filed the present renewed petition under 37 CFR 1.47(a).

DISCUSSION

A review of the present petition and the accompanying papers reveal that applicants have satisfied item (2), in that the applicants have shown that a bona fide attempt was made to present the application papers, including the specification, claims, and drawings to John Barry Finn. The steps taken by Brian Douglas Jenkins, Phillip Pluck, and Barry Meskin are sufficient to show that John Barry Finn has refused to execute the application.

Accordingly, it is appropriate to accord the national stage application status under 37 CFR 1.47(a).

CONCLUSION

The renewed petition under 37 CFR 1.47(a) is **GRANTED**.

As provided in 37 CFR 1.47(a), a notice of the filing of this application will be forwarded to the nonsigning inventor at his last known address of record.

A notice of the filing of the application under 37 CFR 1.47(a) will be published in the Official Gazette.

This application is being returned to the United States Designated/Elected Office for processing in accordance with this decision.

Anthony Smith
Attorney-Advisor
Office of PCT Legal Administration
Tel.: (571) 272-3298
Fax: (571) 273-0459

UNITED STATES PATENT AND TRADEMARK OFFICE

Commissioner for Patents
United States Patent and Trademark Office
P.O. Box 1450
Alexandria, VA 22313-1450
www.uspto.gov

13 SEP 2006

John Barry Finn
1 Ourimbah Street
Lisarow, New South Wastles 2250
Australia

In re Application of
FINN et al.
U.S. Application No. 10/534,222
PCT No.: PCT/AU03/01480
It. Filing Date: 10 November 2003
Priority Date: 08 November 2002
Attorney Docket No.: 123-002
For: A DISTILLATION UNIT AND A METHOD OF DISTILLATION

Dear John Barry Finn:

You are named as an inventor in the above identified United States patent application, filed under the provisions of 37 CFR 1.47(a) and 35 U.S.C. 116. Should a patent be granted, you will be designated as an inventor.

As a named inventor, you are entitled to inspect any paper in the file wrapper of the application, order copies of all or any part thereof (at a prepaid cost per 37 CFR 1.19) or to make your position of record in the application. Alternatively, you may arrange to do any of the preceding through a registered patent agent or attorney presenting written authorization from you. If you care to join in the application, counsel of record (see below) would presumably assist you. Joining in the application would entail the filing of an appropriate oath or declaration by you pursuant to 37 CFR 1.63.

Anthony Smith

Anthony Smith
Attorney-Advisor
Office of PCT Legal Administration
Telephone: (571) 272-3298
Facsimile: (571) 273-0459

Counsel of Record:
Intellectual Property Law Offices of
Joel Voelzke
400 Corporate Pointe, Suite 300
Culver City, CA 90230

UNITED STATES PATENT AND TRADEMARK OFFICE

UNITED STATES DEPARTMENT OF COMMERCE
United States Patent and Trademark Office
Address: COMMISSIONER FOR PATENTS
P.O. Box 1450
Alexandria, Virginia 22313-1450
www.uspto.gov

COLLARD & ROE, P.C.
1077 NORTHERN BOULEVARD
ROSLYN, NY 11576

Mail Date: 04/21/2010

Applicant	: Helmut Strauch	: DECISION ON REQUEST FOR
Patent Number	: 7665178	: RECALCULATION of PATENT
Issue Date	: 02/23/2010	: TERM ADJUSTMENT IN VIEW
Appliction No	: 10/534,224	: OF WYETH AND NOTICE OF INTENT TO
Filed	: 05/06/2005	: ISSUE CERTIFICATE OF CORRECTION
		:

The Request for Recalculation is **GRANTED** to the extent indicated.

The patent term adjustment has been determined to be **1328** days. The USPTO will *sua sponte* issue a certificate of correction reflecting the amount of PTA days determined by the recalculation.

Prior to the issuance of the certificate of correction, the USPTO will afford patentee an opportunity to be heard and request reconsideration. Accordingly, patentee has **one month or thirty (30) days**, whichever is longer, to file a request for reconsideration of this patent term adjustment calculation. See 35 U.S.C. 154(b)(3)(B)(ii) and 37 CFR 1.322(a)(4). No extensions of time will be granted under 37 CFR 1.136.

Patentee should use document code PET.OP if electronically filing a request for reconsideration of this patent term adjustment calculation. The patentee must also include the information required by 37 CFR 1.705(b)(2) and the fee required by 37 CFR 1.18(e). If patentee does not file a timely request for reconsideration of this patent term adjustment calculation including the information required by 37 CFR 1.705(b)(2) and the fee required by 37 CFR 1.18(e), the USPTO will issue a certificate of correction reflecting the PTA determination noted above.

Patentee should be aware that in order to preserve the right to review in the United States District Court for the District of Columbia of the USPTO patent term adjustment determination, patentee must ensure that he or she also take the steps required under 35 U.S.C. 154(b)(4)(A) in a timely manner. Nothing in the request for recalculation should be construed as providing an alternative time frame for commencing a civil action under 35 U.S.C. 154(b)(4)(A).

Any questions concerning this decision should be directed to the Office of Patent Legal Administration at 571-272-7702.

UNITED STATES PATENT AND TRADEMARK OFFICE

UNITED STATES DEPARTMENT OF COMMERCE
United States Patent and Trademark Office
Address: COMMISSIONER FOR PATENTS
P.O. Box 1450
Alexandria, Virginia 22313-1450
www.uspto.gov

BUCHANAN, INGERSOLL & ROONEY PC
POST OFFICE BOX 1404
ALEXANDRIA, VA 22313-1404

Mail Date: 04/20/2010

Applicant	: Christian Bonetto	: DECISION ON REQUEST FOR
Patent Number	: 7594963	: RECALCULATION of PATENT
Issue Date	: 09/29/2009	: TERM ADJUSTMENT IN VIEW
Appliction No	: 10/534,231	: OF WYETH AND NOTICE OF INTENT TO
Filed	: 05/06/2005	: ISSUE CERTIFICATE OF CORRECTION
		:

The Request for Recalculation is **GRANTED** to the extent indicated.

The patent term adjustment has been determined to be **1056** days. The USPTO will *sua sponte* issue a certificate of correction reflecting the amount of PTA days determined by the recalculation.

Prior to the issuance of the certificate of correction, the USPTO will afford patentee an opportunity to be heard and request reconsideration. Accordingly, patentee has **one month or thirty (30) days**, whichever is longer, to file a request for reconsideration of this patent term adjustment calculation. See 35 U.S.C. 154(b)(3)(B)(ii) and 37 CFR 1.322(a)(4). No extensions of time will be granted under 37 CFR 1.136.

Patentee should use document code PET.OP if electronically filing a request for reconsideration of this patent term adjustment calculation. The patentee must also include the information required by 37 CFR 1.705(b)(2) and the fee required by 37 CFR 1.18(e). If patentee does not file a timely request for reconsideration of this patent term adjustment calculation including the information required by 37 CFR 1.705(b)(2) and the fee required by 37 CFR 1.18(e), the USPTO will issue a certificate of correction reflecting the PTA determination noted above.

Patentee should be aware that in order to preserve the right to review in the United States District Court for the District of Columbia of the USPTO patent term adjustment determination, patentee must ensure that he or she also take the steps required under 35 U.S.C. 154(b)(4)(A) in a timely manner. Nothing in the request for recalculation should be construed as providing an alternative time frame for commencing a civil action under 35 U.S.C. 154(b)(4)(A).

Any questions concerning this decision should be directed to the Office of Patent Legal Administration at 571-272-7702.

UNITED STATES PATENT AND TRADEMARK OFFICE

UNITED STATES DEPARTMENT OF COMMERCE
United States Patent and Trademark Office
Address: COMMISSIONER FOR PATENTS
P.O. Box 1450
Alexandria, Virginia 22313-1450
www.uspto.gov

FULBRIGHT & JAWORSKI L.L.P.
600 CONGRESS AVE.
SUITE 2400
AUSTIN, TX 78701

Mail Date: 04/21/2010

Applicant	: Hervé Des Abbayes	: DECISION ON REQUEST FOR
Patent Number	: 7667070	: RECALCULATION of PATENT
Issue Date	: 02/23/2010	: TERM ADJUSTMENT IN VIEW
Appliction No	: 10/534,236	: OF WYETH AND NOTICE OF INTENT TO
Filed	: 02/06/2006	: ISSUE CERTIFICATE OF CORRECTION
		:

The Request for Recalculation is **GRANTED** to the extent indicated.

The patent term adjustment has been determined to be **870** days. The USPTO will *sua sponte* issue a certificate of correction reflecting the amount of PTA days determined by the recalculation.

Prior to the issuance of the certificate of correction, the USPTO will afford patentee an opportunity to be heard and request reconsideration. Accordingly, patentee has **one month or thirty (30) days**, whichever is longer, to file a request for reconsideration of this patent term adjustment calculation. See 35 U.S.C. 154(b)(3)(B)(ii) and 37 CFR 1.322(a)(4). No extensions of time will be granted under 37 CFR 1.136.

Patentee should use document code PET.OP if electronically filing a request for reconsideration of this patent term adjustment calculation. The patentee must also include the information required by 37 CFR 1.705(b)(2) and the fee required by 37 CFR 1.18(e). If patentee does not file a timely request for reconsideration of this patent term adjustment calculation including the information required by 37 CFR 1.705(b)(2) and the fee required by 37 CFR 1.18(e), the USPTO will issue a certificate of correction reflecting the PTA determination noted above.

Patentee should be aware that in order to preserve the right to review in the United States District Court for the District of Columbia of the USPTO patent term adjustment determination, patentee must ensure that he or she also take the steps required under 35 U.S.C. 154(b)(4)(A) in a timely manner. Nothing in the request for recalculation should be construed as providing an alternative time frame for commencing a civil action under 35 U.S.C. 154(b)(4)(A).

Any questions concerning this decision should be directed to the Office of Patent Legal Administration at 571-272-7702.

UNITED STATES PATENT AND TRADEMARK OFFICE

Commissioner for Patents
United States Patent and Trademark Office
P.O. Box 1450
Alexandria, VA 22313-1450
www.uspto.gov

OBLON, SPIVAK, MCCLELLAND MAIER & NEUSTADT, L.L.P.
1940 DUKE STREET
ALEXANDRIA VA 22314

COPY MAILED
FEB 04 2010

In re Application of	:	
Juan Manuel Teijiodo, et al.	:	
Application No. 10/534,237	:	DECISION GRANTING PETITION
Filed: May 6, 2005	:	UNDER 37 CFR 1.313(c)(2)
Attorney Docket No. 282780US8X PCT	:	

This is a decision on the petition under 37 CFR 1.313(c)(2), filed, February 3, 2010 to withdraw the above-identified application from issue after payment of the issue fee.

The petition is **GRANTED**.

The above-identified application is withdrawn from issue for consideration of a submission under 37 CFR 1.114 (request for continued examination). *See* 37 CFR 1.313(c)(2).

Petitioner is advised that the issue fee paid on December 12, 2009 cannot be refunded. If, however, this application is again allowed, petitioner may request that it be applied towards the issue fee required by the new Notice of Allowance.[1]

Telephone inquiries should be directed to Terri Johnson at (571) 272-2991.

This application is being referred to Technology Center AU 2873 for processing of the request for continued examination under 37 CFR 1.114 and for consideration of the concurrently filed information disclosure statement.

Terri Johnson
Petitions Examiner
Office of Petitions

[1] *The request to apply the issue fee to the new Notice may be satisfied by completing and returning the new Part B – Fee(s) Transmittal Form (along with any balance due at the time of submission). Petitioner is advised that the Issue Fee Transmittal Form must be completed and timely submitted to avoid abandonment of the application.*

UNITED STATES PATENT AND TRADEMARK OFFICE

Commissioner for Patents
United States Patent and Trademark Office
P.O. Box 1450
Alexandria, VA 22313-1450
www.uspto.gov

FRIEDRICH KUEFFNER
317 MADISON AVENUE SUITE 910
NEW YORK NY 10017

COPY MAILED

AUG 1 0 2009

OFFICE OF PETITIONS

In re Application of	:	
Schubert, et al.	:	
Application No. 10/534,240	:	ON PETITION
Filed: October 24, 2005	:	
Attorney Docket No. HM-621PCT	:	

This is a decision on the petition under 37 CFR 1.137(a), filed June 30, 2009, to revive the above-identified application.

The petition under 37 CFR 1.137(a) is **DISMISSED**.

Any request for reconsideration of this decision must be submitted within TWO (2) MONTHS from the mail date of this decision. Extensions of time under 37 CFR 1.136(a) are permitted. The reconsideration request should include a cover letter entitled "Renewed Petition Under 37 CFR 1.137(b)." This is **not** a final agency decision within the meaning of 5 USC 704.

A grantable petition under 37 CFR 1.137(a) must be accompanied by: (1) the required reply, unless previously filed; (2) the petition fee as set forth in 37 CFR 1.17(m); (3) a showing that the entire delay in filing the required reply from the due date for the reply until the filing of a grantable petition pursuant to 37 CFR 1.137(a) was unavoidable; and (4) any terminal disclaimer (and fee as set forth in 37 CFR 1.20(d)) required by 37 CFR 1.137(d).

The instant petition lacks item (2), the petition fee. As the petition fee is a requirement for the consideration of the

petition, and not merely the granting of the petition, the petition will not be considered on the merits until such time as the petition fee is submitted. The petition fee for a petition to revive under 37 CFR 1.137(a) is currently $540. Petitioner submitted $130. No authorization to charge any fee deficiency to a deposit account was found. Accordingly, on renewed petition, petitioner must submit the balance of the petition fee due.

Further correspondence with respect to this matter should be addressed as follows:

By mail: Mail Stop Petitions
Commissioner for Patents
P.O. Box 1450
Alexandria VA 22313-1450

By FAX: (571)273-8300
Attn: Office of Petitions

Telephone inquiries concerning this decision should be directed to the undersigned at (571)272-3207.

Cliff Congo
Petitions Attorney
Office of Petitions

UNITED STATES PATENT AND TRADEMARK OFFICE

Commissioner for Patents
United States Patent and Trademark Office
P.O. Box 1450
Alexandria, VA 22313-1450
www.uspto.gov

FRIEDRICH KUEFFNER
317 MADISON AVENUE, SUITE 910
NEW YORK NY 10017

COPY MAILED

SEP 30 2009

OFFICE OF PETITIONS

In re Application of
Schubert, et al.
Application No. 10/534,240
Filed: October 24, 2005
Attorney Docket No. HM-621PCT

ON PETITION

This is a decision on the petition under 37 CFR 1.137(a), filed August 20, 2009, to revive the above-identified application.

The petition under 37 CFR 1.137(a) is **DISMISSED**.

The above-identified application became abandoned for failure to respond to the Notice of Allowance and Issue Fee Due mailed January 28, 2009, that allowed a statutory period for reply of three months from its mailing date. No response was received within the allowable period and the application became abandoned on April 29, 2009. A Notice of Abandonment was mailed May 27, 2009.

A grantable petition under 37 CFR 1.137(a)[1] must be accompanied by: (1) the required reply,[2] unless previously filed; (2) the petition fee as set forth in 37 CFR 1.17(1); (3) a showing to the satisfaction of the Commissioner that the entire delay in filing the required reply from the due date for the reply until the filing of a grantable petition pursuant to this paragraph was unavoidable; and (4) any terminal disclaimer required by 37 CFR 1.137(c).

The instant petition lacks item (3).

The Commissioner is responsible for determining the standard for unavoidable delay and for applying that standard.

[1] As amended effective December 1, 1997. See Changes to Patent Practice and Procedure; Final Rule Notice 62 Fed. Reg. 53131, 53194-95 (October 10, 1997), 1203 Off. Gaz. Pat. Office 63, 119-20 (October 21, 1997).

[2] In a nonprovisional application abandoned for failure to prosecute, the required reply may be met by the filing of a continuing application. In an application or patent, abandoned or lapsed for failure to pay the issue fee or any portion thereof, the required reply must be the payment of the issue fee or any outstanding balance thereof.

"In the specialized field of patent law, . . . the Commissioner of Patent and Trademarks is primarily responsible for the application and enforcement of the various narrow and technical statutory and regulatory provisions. The Commissioner's interpretation of those provisions is entitled to considerable deference."[3]

"[T]he Commissioner's discretion cannot remain wholly uncontrolled, if the facts **clearly** demonstrate that the applicant's delay in prosecuting the application was unavoidable, and that the Commissioner's adverse determination lacked **any** basis in reason or common sense."[4]

"The court's review of a Commissioner's decision is 'limited, however, to a determination of whether the agency finding was arbitrary, capricious, an abuse of discretion, or otherwise not in accordance with the law.'"[5]
"The scope of review under the arbitrary and capricious standard is narrow and a court is not to substitute its judgment for that of the agency."[6]

The standard

"[T]he question of whether an applicant's delay in prosecuting an application was unavoidable must be decided on a case-by-case basis, taking all of the facts and circumstances into account."[7] The general question asked by the Office is: "Did petitioner act as a reasonable and prudent person in relation to his most important business?"[8] Nonawarness of a PTO rule will not constitute unavoidable delay.[9]

---

[3]Rydeen v. Quigg, 748 F.Supp. 900, 904, 16 U.S.P.Q.2d (BNA) 1876 (D.D.C. 1990), aff'd without opinion (Rule 36), 937 F.2d 623 (Fed. Cir.1991) (citing Morganroth v. Quigg, 885 F.2d 843, 848, 12 U.S.P.Q.2d (BNA) 1125 (Fed. Cir. 1989); Ethicon, Inc. v. Quigg 849 F.2d 1422, 7 U.S.P.Q.2d (BNA 1152 (Fed. Cir. 1988) ("an agency' interpretation of a statute it administers is entitled to deference"); see also Chevron U.S.A. Inc. v. Natural Resources Defence Council, Inc., 467 U.S. 837, 844, 81 L. Ed. 694, 104 S. Ct. 2778 (1984) ("if the statute is silent or ambiguous with respect to the specific issue, the question for the court is whether the agency's answer is based on a permissible construction of the statute.")

[4]Commissariat A L'Energie Atomique et al. v. Watson, 274 F.2d 594, 597, 124 U.S.P.Q. (BNA) 126 (D.C. Cir. 1960) (emphasis added).

[5]Haines v. Quigg, 673 F. Supp. 314, 316, 5 U.S.P.Q.2d (BNA) 1130 (N.D. Ind. 1987) (citing Camp v. Pitts, 411 U.S. 138, 93 S. Ct.1241, 1244 (1973) (citing 5 U.S.C. §706 (2)(A)); Beerly v. Dept. of Treasury, 768 F.2d 942, 945 (7th Cir. 1985); Smith v. Mossinghoff, 217 U.S. App. D.C. 27, 671 F.2d 533, 538 (D.C. Cir.1982)).

[6]Ray v. Lehman, 55 F.3d 606, 608, 34 U.S.P.Q2d (BNA) 1786 (Fed. Cir. 1995) (citing Motor Vehicles Mfrs. Ass'n v. State Farm Mut. Auto. Ins. Co., 463 U.S. 29, 43, 77 L.Ed.2d 443, 103 S. Ct. 2856 (1983)).

[7]Id.

[8]See In re Mattulah, 38 App. D.C. 497 (D.C. Cir. 1912).

[9]See Smith v. Mossinghoff, 671 F.2d 533, 538, 213 U.S.P.Q. (BNA) 977 (Fed. Cir. 1982) (citing Potter v. Dann, 201 U.S.P.Q. (BNA) 574 (D.D.C. 1978) for the proposition that counsel's nonawarness of PTO rules does not constitute "unavoidable" delay)). Although court decisions have only addressed the issue of lack of knowledge of an attorney, there is no reason to expect a different result due to lack of knowledge on the part of a pro se (one who prosecutes on his own) applicant. It would be inequitable for a court to determine that a client who spends his hard earned money on an attorney who happens not to know a specific rule should be held to a higher standard than a pro se applicant who makes (or is forced to make) the decision to file the application without the assistance of counsel.

Application of the standard to the current facts and circumstances

In the instant petition, petitioner maintains that the circumstances leading to the abandonment of the application meet the aforementioned unavoidable standard and, therefore, petitioner qualifies for relief under 37 CFR 1.137(a). In support thereof, petitioner asserts that credit card that petitioner authorized to be charged the issue fee had should have had sufficient amounts available to charge the issue fee on May 4, 2009, however, the transaction was declined by the credit card company because the credit card company withheld a payment petitioner made that would have made sufficient funds available to charge the issue fee payment.

With regard to item (3) above, the aforementioned argument of petitioner in support of petitioner's belief that the above-cited application was unavoidably abandoned is not persuasive. The reason petitioner's argument must necessarily fail is addressed below.

A successful petition under 37 CFR 1.137(a) requires that petitioner establish that the apparent error, which caused the delay in responding to the Office action, was unavoidable. The term 'unavoidable' is interpreted to mean that petitioner has taken all reasonable and prudent steps to ensure that a proper response is received within the period for reply set forth, and despite such efforts, petitioner was not able to file a timely response. A failure of the credit card company to credit a payment petitioner made to the credit card so that funds would be available to charge the issue fee payment is not an unavoidable circumstance. It is reasonable to expect that, prior to submitting the Issue Fee Transmittal Form with the credit card authorization, that petitioner would make sure that the credit card petitioner is authorizing to be charged has sufficient funds available on which to charge the issue fee. Further, it is noted that petitioner authorized a deposit account to be charged in the event the credit card was declined. A review of the application file reveals that the deposit account only had $1.00 in it on May 4, 2009. Petitioner neither checked to see to if the credit card was able to be charged nor checked the balance of the deposit account prior to submitting the Issue Fee Transmittal form. Petitioner has not demonstrated that petitioner acted reasonably and prudently relative to filing a timely response to the Notice of Allowance and Issue Fee Due such that the delay in filing a timely response would be considered unavoidable. The petition is dismissed, accordingly.

Petitioner may wish to consider filing a petition to revive based on unintentional abandonment under 37 CFR 1.137(b). A grantable petition pursuant to 37 CFR 1.137(b) must be accompanied by the required reply (already submitted), the required petition fee ($1,620.00 for a large entity and $810.00 for a verified small entity), and a statement that the **entire** delay in filing the required reply from the due date for the reply until the filing of a grantable petition pursuant to 37 CFR 1.137(b) was unintentional.

Further correspondence with respect to this matter should be addressed as follows:

By mail: Mail Stop Petitions
Commissioner for Patents
Box 1450
Alexandria, VA 22313-1450

By facsimile: (571) 273-8300
Attn: Office of Petitions

Telephone inquiries regarding this decision should be directed to the undersigned (571) 272-3222.

Kenya A. McLaughlin
Petitions Attorney
Office of Petitions

UNITED STATES PATENT AND TRADEMARK OFFICE

Commissioner for Patents
United States Patent and Trademark Office
P.O. Box 1450
Alexandria, VA 22313-1450
www.uspto.gov

FRIEDRICH KUEFFNER
317 MADISON AVENUE, SUITE 910
NEW YORK NY 10017

MAILED

JAN 07 2010

OFFICE OF PETITIONS

In re Application of	:	
Bernd Schubert, et al.	:	
Application No. 10/534,240	:	DECISION ON PETITION
Filed: October 24, 2005	:	
Attorney Docket No. HM-621PCT	:	

This is a decision on the petition under the unintentional provisions of 37 CFR 1.137(b), filed November 23, 2009, to revive the above-identified application.

The petition is **GRANTED**.

This application became abandoned for failure to timely pay the issue and publication fees on or before April 28, 2009, as required by the Notice of Allowance and Fee(s) Due, mailed January 28, 2009. Accordingly, the date of abandonment of this application is April 29, 2009. The Notice of Abandonment was mailed May 27, 2009.

The petition satisfies the requirements of 37 CFR 1.137(b) in that petitioner has supplied (1) the reply in the form of payment of the issue fee of $1,510 and the publication fee of $300, (2) the petition fee of $1,620; and (3) a proper statement of unintentional delay.

Telephone inquiries concerning this decision should be directed to Terri Johnson at (571) 272-2991.

This application is being referred to the Office of Data Management for processing into a patent.

Terri Johnson
Terri Johnson
Petitions Examiner
Office of Petitions

29 NOV 2005

United States Patent and Trademark Office

#3

Commissioner for Patents
United States Patent and Trademark Office
P.O. Box 1450
Alexandria, VA 22313-1450
www.uspto.gov

Burns, Doane, Swecker & Mathis, LLP
P.O. Box 1404
Alexandria, VA 22313-1404

In re Application of	:	
Guennouni et al.	:	
Application No.: 10/534,246	:	DECISION
PCT No.: PCT/FR03/02301	:	
Int. Filing Date: 21 July 2003	:	ON
Priority Date: 09 August 2002	:	
Attorney Docket No.: 022702-117	:	PETITION
For: Method Of Preparing Halogeno-Alkyldialkylchlorosilane	:	

The petition to revive under 37 CFR 1.137(b) filed 10 May 2005 in the above-captioned application is hereby **GRANTED** as follows:

Applicant states that "the entire delay in filing the attached Filing Under 35 U.S.C. 371 from the due date for filing the attached Filing Under 35 U.S.C. 371 until the filing of this Petition was unintentional." This is being construed as a statement that "the entire delay in filing the required reply from the due date for the reply until the filing of a grantable petition pursuant to 37 CFR 1.137(b) was unintentional." Petitioner must notify the Patent and Trademark Office if such an interpretation of the statement in the petition is not correct. Thus, the statement in the petition is being accepted in satisfaction of 37 CFR 1.137(b)(3).

A review of the application file reveals that the required petition fee of $1500.00 has been paid. The $300.00 basic national fee has also been paid. Thus, the requirements of 37 CFR 1.137(b) have been satisfied. Therefore, the request to revive the application abandoned under 35 U.S.C. 371(d) is granted as to the National stage in the United States of America.

This application is being forwarded to the United States Designated/Elected Office for further processing, including the preparation and mailing of a Notification of Missing Requirements (Form PCT/DO/EO/905) requiring the payment of the surcharge under 37 CFR 1.492(h) and the processing fee under 37 CFR 1.492(i), and the submission of an oath or declaration compliant with 37 CFR 1.497(a) and (b) and an English translation of the international application.

Richard Cole
PCT Legal Examiner
PCT Legal Office

George M. Dombroske
PCT Legal Examiner
PCT Legal Office
Tel: (571) 272-3283
Fax: (571) 273-0459

UNITED STATES PATENT AND TRADEMARK OFFICE

UNITED STATES DEPARTMENT OF COMMERCE
United States Patent and Trademark Office
Address: COMMISSIONER FOR PATENTS
P.O. Box 1450
Alexandria, Virginia 22313-1450
www.uspto.gov

LOWE HAUPTMAN HAM & BERNER, LLP
1700 DIAGONAL ROAD
SUITE 300
ALEXANDRIA, VA 22314

Mail Date: 04/22/2010

Applicant	: Hirofumi Akagi	: DECISION ON REQUEST FOR
Patent Number	: 7606052	: RECALCULATION of PATENT
Issue Date	: 10/20/2009	: TERM ADJUSTMENT IN VIEW
Appliction No	: 10/534,250	: OF WYETH AND NOTICE OF INTENT TO
Filed	: 03/09/2006	: ISSUE CERTIFICATE OF CORRECTION
		:

The Request for Recalculation is **GRANTED** to the extent indicated.

The patent term adjustment has been determined to be **391** days. The USPTO will *sua sponte* issue a certificate of correction reflecting the amount of PTA days determined by the recalculation.

Prior to the issuance of the certificate of correction, the USPTO will afford patentee an opportunity to be heard and request reconsideration. Accordingly, patentee has **one month or thirty (30) days**, whichever is longer, to file a request for reconsideration of this patent term adjustment calculation. See 35 U.S.C. 154(b)(3)(B)(ii) and 37 CFR 1.322(a)(4). No extensions of time will be granted under 37 CFR 1.136.

Patentee should use document code PET.OP if electronically filing a request for reconsideration of this patent term adjustment calculation. The patentee must also include the information required by 37 CFR 1.705(b)(2) and the fee required by 37 CFR 1.18(e). If patentee does not file a timely request for reconsideration of this patent term adjustment calculation including the information required by 37 CFR 1.705(b)(2) and the fee required by 37 CFR 1.18(e), the USPTO will issue a certificate of correction reflecting the PTA determination noted above.

Patentee should be aware that in order to preserve the right to review in the United States District Court for the District of Columbia of the USPTO patent term adjustment determination, patentee must ensure that he or she also take the steps required under 35 U.S.C. 154(b)(4)(A) in a timely manner. Nothing in the request for recalculation should be construed as providing an alternative time frame for commencing a civil action under 35 U.S.C. 154(b)(4)(A).

Any questions concerning this decision should be directed to the Office of Patent Legal Administration at 571-272-7702.

#8

UNITED STATES PATENT and TRADEMARK OFFICE

COMMISSIONER FOR PATENTS
UNITED STATES PATENT AND TRADEMARK OFFICE
P.O BOX 1450
ALEXANDRIA, VA 22313-1450
www.uspto.gov

20 JUL 2006

ADDA C. GOGORIS
DARBY & DARBY P.C.
P.O. Box 5257
New York, New York 10150-5257

In re Application of	:	DECISION ON
Kujundzic et al	:	
PCT No.: PCT/HR2003/000057	:	
Application No: 10/534,261	:	
Int. Filing Date: 10 November 2003	:	REQUEST FOR REFUND
Priority Date: 11 November 2002	:	
Attorney's Docket No.: 20304/020873-US0	:	
For: SUBSTITUTED 9A-N...	:	
AMINOPROPYL DERIVATIVES OF etc	:	UNDER 37 CFR 1.26

This Decision is in response to applicants' copy of the "RESPONSE TO NOTICE TO FILE MISSING PARTS OF APPLICATION & REQUEST FOR FILING FEE OVERPAYMENT REFUND" filed on 30 November 2005, which is being treated as a request under 37 CF 1.26 requesting a refund of the $1530.00 fee charged to undersigned's Deposit Account.

DISCUSSION

Pursuant 37 CFR §1.26(a) (refunds) "[a]ny fee paid in excess of that required will be refunded, but a mere change of purpose after the payment of money, as when a party desires to withdraw an application,... will not entitle a party to demand such a return."

Applicants argue that $3,060.00 was the total amount paid to the USPTO toward the present applications filings fees and that the total amount due was $1,530.00. Accordingly, $1,530.00 refund is due to Darby & Darby because of the overpayment for the filing fees.

A review of the file indicates on 13 May 2005, the USPTO charged $1,400 to the Deposit Account No.: 040100 and the Office also received a check of $300.00. On 29 September 2005, the USPTO refunded $500.00 to applicants' Deposit Account but also charged the Deposit Account $400.00. On 30 September 2005 the USPTO charged the Deposit Account $1,560.00 and on 18 October 2005 the USPTO charged the Deposit Account $40.00. The total amount charged was $2900.00 but the filing fee due was $1,530.00. Therefore, applicants were overcharged by $1,370.00.

Accordingly, applicants' are entitled to a refund of the fees paid and the $1,370.00 will be refunded to applicants' Deposit Account No.: 04-0100.

CONCLUSION

For reasons above, the request is **GRANTED**.

Rafael Bacares
PCT Legal Examiner
PCT Legal Office
Telephone: (571) 272- 3276
Facsimile: (571) 273-0459

#9

UNITED STATES PATENT AND TRADEMARK OFFICE

Commissioner for Patents
United States Patent and Trademark Office
P.O. Box 1450
Alexandria, VA 22313-1450
www.uspto.gov

04 AUG 2006

Patent Administrator
FMC Corporation
1735 Market Street
Philadelphia PA 19103

In re Application of	:	
WU et al.	:	DECISION ON
Application No.: 10/534,279	:	
PCT No.: PCT/US2003/036001	:	PAPERS
Int. Filing Date: 10 November 2003	:	
Priority Date: 08 November 2002	:	UNDER 37 CFR 1.42
Attorney's Docket No.: 60290-USA	:	
For: LEPIDOPTERA VOLTAGE-GATED	:	
CALCIUM CHANNELS	:	

This is a decision on applicants' submission filed in the United States Patent and Trademark Office (USPTO) on 21 April 2006, which was accompanied by a declaration of inventors. The indication in this declaration that joint inventor Peter M. Dierks is deceased has been treated as a request for status under 37 CFR 1.42.

BACKGROUND

On 10 November 2003, applicants filed international application PCT/US2003/036001, which designated the United States and claimed a priority date of 08 November 2002. A copy of the international application was communicated to the United States Patent and Trademark Office (USPTO) from the International Bureau on 27 May 2004. The thirty-month period for paying the basic national fee in the United States expired at midnight on 08 May 2005.

On 21 April 2005, applicants filed a transmittal letter for entry into the national stage in the United States accompanied by, *inter alia*, the basic national fee.

On 21 December 2005, the United States Designated/Elected Office (DO/EO/US) mailed a NOTIFICATION OF MISSING REQUIREMENTS UNDER 35 U.S.C. 371 (Form PCT/DO/EO/905) indicating, *inter alia*, that an oath or declaration in compliance with 37 CFR 1.497(a)-(b) and the surcharge under 37 CFR 1.492(h) for filing any of the search fee, the examination fee, or the oath or declaration after the date of the commencement of the national stage were required.

On 21 April 2006, applicants filed the instant submission which was accompanied by, *inter alia*, a declaration of inventors and the surcharge under 37 CFR 1.492(h). The indication in the

declaration that inventor Peter M. Dierks is deceased has been treated as a request for status under 37 CFR 1.42.

DISCUSSION

The submission filed 21 April 2006 has been reviewed and has been found in compliance with 37 CFR 1.42. The declaration filed 21 April 2006 is in compliance with 37 CFR 1.497(a)-(b).

CONCLUSION

For the above reasons, the request for status under 37 CFR 1.42 is **ACCEPTED**.

This application is being forwarded to the National Stage Processing Branch of the Office of PCT Operations to continue national stage processing of the application in accordance with this decision.

Daniel Stemmer
Legal Examiner
PCT Legal Affairs
Office of Patent Cooperation Treaty
Legal Administration
Telephone: (571) 272-3301
Facsimile: (571) 273-0459

UNITED STATES PATENT AND TRADEMARK OFFICE

Commissioner for Patents
United States Patent and Trademark Office
P.O. Box 1450
Alexandria, VA 22313-1450
www.uspto.gov

21 AUG 2007

Peter I. Bernstein
Scully, Scott, Murphy & Presser, P.C.
400 Garden City Plaza, Suite 300
Garden City, New York 11530

In re Application of	:	
ROTHENBERG, et al.	:	
Application No.: 10/534,303	:	DECISION ON PETITIONS
PCT No.: PCT/US03/35690	:	
Int. Filing Date: 07 November 2003	:	UNDER 37 CFR 1.183 AND
Priority Date: 08 November 2002	:	
Atty. Docket No.: 15804	:	37 CFR 1.497(d)
For: ASSAY FOR AUTOANTIBODIES TO FOLATE	:	
RECEPTORS	:	

This decision is in response to applicant's "PETITION UNDER 37 C.F.R. §1.183" filed 15 May 2007 in the United States Patent and Trademark Office (USPTO). Applicant has provided payment of the $400.00 petition fee.

BACKGROUND

On 07 November 2003, applicant filed international application PCT/US03/35690 which claimed priority to an earlier U.S. application filed 08 November 2002. Pursuant to 37 CFR 1.495, the thirty-month period for paying the basic national fee in the United States was set to expire at midnight on 08 May 2005.

On 09 May 2005, applicant filed a transmittal letter for entry into the national stage in the United States which was accompanied by the requisite basic national fee as required by 35 U.S.C. 371(c)(1); a First preliminary amendment.

On 29 August 2005, applicant was mailed a "Notification of Missing Requirements" (Form PCT/DO/EO/905) informing applicant that an executed oath or declaration of the inventors in compliance with 37 CFR 1.497(a)-(b) was required. Applicant was afforded two months to file the required response and advised that this period could be extended pursuant to 37 CFR 1.136(a).

On 01 November 2005, applicant filed an execute combined declaration and power of attorney.

On 06 March 2006, applicant was mailed a "Notice of Acceptance of Application Under35 U.S.C. 371 and 37 CFR 1.495" (Form PCT/DO/EO/903).

On 15 May 2007, applicant filed the petition under 37 CFR1.183 considered herein.

DISCUSSION

I. PETITION UNDER 37 CFR 1.183

Applicant's petition under 37 CFR 1.183 arises out of applicant's concurrently filed petition under 37 CFR 1.48(a) to add a fourth inventor, Mr. Edward V. Quadros, to the application. Specifically, applicant is contending that one of the three original inventors, Maria da Costa, has refused to execute a declaration which lists Mr. Quadros as one of the inventors. Applicant seeks suspension of the rule and waiver of the signature requirement of Ms. Da Costa.

The Manual of Patent Examining Procedure (MPEP) section 201.03 II A details the procedures for the present scenario:

Alternatively, where D is to be added as an inventor (where inventors A, B, and C have previously executed the application under 37 CFR 1.63) and it is original inventor A who refuses to cooperate, the statement under 37 CFR 1.48(a)(2) is only required to be signed by inventor D. Originally named inventor A is merely required to reexecute an oath or declaration in compliance with 37 CFR 1.63. Petitions under 37 CFR 1.47 are only applicable to an original oath or declaration and are not applicable to the reexecution of another oath or declaration by A. In such circumstances, a petition under 37 CFR 1.183 should be considered requesting waiver of the requirement of 37 CFR 1.64 that each of the actual inventors, i.e., inventor A, execute the oath or declaration, particularly where assignee consent is given to the requested correction. Absent assignee consent, the petition under 37 CFR 1.183 requesting waiver of the reexecution of the oath or declaration will be evaluated as to whether the nonsigning inventor was actually given the opportunity to reexecute the oath or declaration, or whether the nonsigning inventor could not be reached.

Applicant has presently provided a petition under 37 CFR 1.183 requesting waiver of the signature requirement of inventor Da Costa. It is clear from the filed papers that Ms. Da Costa was provided with the opportunity to reexecute the oath or declaration and refused. As such, it is proper to grant applicant's petition under 37 CFR 1.183 at this time.

II. PETITION UNDER 37 CFR1.497(d)

37 CFR 1.497(d) [formally, 37 CFR 1.48] states in part: "If the oath or declaration filed pursuant to 35 U.S.C. 371(c)(4) and this section names an inventive entity different from the inventive entity set forth in the international application....applicant must submit:

(1) a statement from each person being added or deleted as an inventor that the error in inventorship occurred without any deceptive intention on his or her part;

(2) the fee set forth in 37 CFR 1.17(h); and

(3) if an assignment has been executed by any of the original named inventors, the written consent of the assignee in compliance with 37 CFR 3.73(b); and

(4) any new oath or declaration required by paragraph (f) of this section.

Applicant has satisfied items (1), (2) and (4) (as discussed above). Item (3) does not apply. As such, it is proper to grant applicant's petition at this time.

CONCLUSION

Applicant's petition under 37 CFR 1.183 is **GRANTED**.

Applicant's petition under 37 CFR 1.497(d) is **GRANTED**.

This application is being forwarded to Group Art Unit 1647 for examination.

Derek A. Putonen
Attorney Advisor
Office of PCT Legal Administration
Tel: (571) 272-3294
Fax: (571) 273-0459

UNITED STATES PATENT AND TRADEMARK OFFICE

UNITED STATES DEPARTMENT OF COMMERCE
United States Patent and Trademark Office
Address: COMMISSIONER FOR PATENTS
P.O. Box 1450
Alexandria, Virginia 22313-1450
www.uspto.gov

APPL NO.	FILING OR 371(c) DATE	ART UNIT	FIL FEE REC'D	ATTY.DOCKET NO	TOT CLMS	IND CLMS
10/534,303	11/01/2005	1647	1120	15804	24	4

CONFIRMATION NO. 9810

CORRECTED FILING RECEIPT

OC000000025483664

272
SCULLY, SCOTT, MURPHY & PRESSER, P.C.
400 GARDEN CITY PLAZA
SUITE 300
GARDEN CITY, NY 11530

Date Mailed: 08/21/2007

Receipt is acknowledged of this nonprovisional patent application. The application will be taken up for examination in due course. Applicant will be notified as to the results of the examination. Any correspondence concerning the application must include the following identification information: the U.S. APPLICATION NUMBER, FILING DATE, NAME OF APPLICANT, and TITLE OF INVENTION. Fees transmitted by check or draft are subject to collection. Please verify the accuracy of the data presented on this receipt. **If an error is noted on this Filing Receipt, please write to the Office of Initial Patent Examination's Filing Receipt Corrections. Please provide a copy of this Filing Receipt with the changes noted thereon. If you received a "Notice to File Missing Parts" for this application, please submit any corrections to this Filing Receipt with your reply to the Notice. When the USPTO processes the reply to the Notice, the USPTO will generate another Filing Receipt incorporating the requested corrections (if appropriate).**

Applicant(s)

Sheldon P Rothenberg, New York, NY;
Maria Da Costa, New York, NY;
Jeffrey Sequeria, Brooklyn, NY;
Edward V. Quadros, Brooklyn, NY;

Power of Attorney: The patent practitioners associated with Customer Number **272**.

Domestic Priority data as claimed by applicant

This application is a 371 of PCT/US03/35690 11/07/2003

Foreign Applications

UNITED STATES OF AMERICA 60424965 11/08/2002

If Required, Foreign Filing License Granted: 09/12/2006

The country code and number of your priority application, to be used for filing abroad under the Paris Convention, is US10/534,303

Projected Publication Date: Not Applicable

Non-Publication Request: No

Early Publication Request: No

**** SMALL ENTITY ****

Title

Assay for autoantibodies to folate receptors

Preliminary Class

435

PROTECTING YOUR INVENTION OUTSIDE THE UNITED STATES

Since the rights granted by a U.S. patent extend only throughout the territory of the United States and have no effect in a foreign country, an inventor who wishes patent protection in another country must apply for a patent in a specific country or in regional patent offices. Applicants may wish to consider the filing of an international application under the Patent Cooperation Treaty (PCT). An international (PCT) application generally has the same effect as a regular national patent application in each PCT-member country. The PCT process **simplifies** the filing of patent applications on the same invention in member countries, but **does not result** in a grant of "an international patent" and does not eliminate the need of applicants to file additional documents and fees in countries where patent protection is desired.

Almost every country has its own patent law, and a person desiring a patent in a particular country must make an application for patent in that country in accordance with its particular laws. Since the laws of many countries differ in various respects from the patent law of the United States, applicants are advised to seek guidance from specific foreign countries to ensure that patent rights are not lost prematurely.

Applicants also are advised that in the case of inventions made in the United States, the Director of the USPTO must issue a license before applicants can apply for a patent in a foreign country. The filing of a U.S. patent application serves as a request for a foreign filing license. The application's filing receipt contains further information and guidance as to the status of applicant's license for foreign filing.

Applicants may wish to consult the USPTO booklet, "General Information Concerning Patents" (specifically, the section entitled "Treaties and Foreign Patents") for more information on timeframes and deadlines for filing foreign patent applications. The guide is available either by contacting the USPTO Contact Center at 800-786-9199, or it can be viewed on the USPTO website at http://www.uspto.gov/web/offices/pac/doc/general/index.html.

For information on preventing theft of your intellectual property (patents, trademarks and copyrights), you may wish to consult the U.S. Government website, http://www.stopfakes.gov. Part of a Department of Commerce initiative, this website includes self-help "toolkits" giving innovators guidance on how to protect intellectual property in specific countries such as China, Korea and Mexico. For questions regarding patent enforcement issues, applicants may call the U.S. Government hotline at 1-866-999-HALT (1-866-999-4158).

LICENSE FOR FOREIGN FILING UNDER
Title 35, United States Code, Section 184
Title 37, Code of Federal Regulations, 5.11 & 5.15

GRANTED

The applicant has been granted a license under 35 U.S.C. 184, if the phrase "IF REQUIRED, FOREIGN FILING LICENSE GRANTED" followed by a date appears on this form. Such licenses are issued in all applications where the conditions for issuance of a license have been met, regardless of whether or not a license may be required as set forth in 37 CFR 5.15. The scope and limitations of this license are set forth in 37 CFR 5.15(a) unless an earlier

license has been issued under 37 CFR 5.15(b). The license is subject to revocation upon written notification. The date indicated is the effective date of the license, unless an earlier license of similar scope has been granted under 37 CFR 5.13 or 5.14.

This license is to be retained by the licensee and may be used at any time on or after the effective date thereof unless it is revoked. This license is automatically transferred to any related applications(s) filed under 37 CFR 1.53(d). This license is not retroactive.

The grant of a license does not in any way lessen the responsibility of a licensee for the security of the subject matter as imposed by any Government contract or the provisions of existing laws relating to espionage and the national security or the export of technical data. Licensees should apprise themselves of current regulations especially with respect to certain countries, of other agencies, particularly the Office of Defense Trade Controls, Department of State (with respect to Arms, Munitions and Implements of War (22 CFR 121-128)); the Bureau of Industry and Security, Department of Commerce (15 CFR parts 730-774); the Office of Foreign Assets Control, Department of Treasury (31 CFR Parts 500+) and the Department of Energy.

NOT GRANTED

No license under 35 U.S.C. 184 has been granted at this time, if the phrase "IF REQUIRED, FOREIGN FILING LICENSE GRANTED" DOES NOT appear on this form. Applicant may still petition for a license under 37 CFR 5.12, if a license is desired before the expiration of 6 months from the filing date of the application. If 6 months has lapsed from the filing date of this application and the licensee has not received any indication of a secrecy order under 35 U.S.C. 181, the licensee may foreign file the application pursuant to 37 CFR 5.15(b).

UNITED STATES PATENT AND TRADEMARK OFFICE

Commissioner for Patents
United States Patent and Trademark Office
Washington, D.C. 20231
www.uspto.gov

06 OCT 2006

DUANE MORRIS, LLP
IP DEPARTMENT
30 SOUTH 17TH STREET
PHILADELPHIA PA 19103-4196

In re Application of: EINBRODT, Wolfgang, et al	:	
U.S. Application No.: 10/534,304	:	DECISION
PCT No.: PCT/DE2003/003739	:	
International Filing Date: 12 November 2003	:	
Priority Date: 12 November 2002	:	
Attorney's Docket No.: D4695-00133	:	
For: MONOLITHICALLY INTEGRATED	:	
VERTICAL PIN PHOTODIODE USED	:	
IN BICMOS TECHNOLOGY	:	

The petition for revival under 37 CFR 1.137(b) filed 08 September 2006 in the above-captioned application is hereby **GRANTED** as follows:

The statement that "the entire delay in filing the required reply from the due date for the required reply until the filing of a grantable petition under 37 CFR 1.137(b) was unintentional" satisfies the requirements of 37 CFR 1.137(b)(3).

Applicant has submitted the required reply, that is, an English translation of the drawings contained in the international application, and the requirements of 37 CFR 1.137(b) have been satisfied; therefore, the request to revive the application is granted as to the national stage in the United States of America.

This application is being referred to the National Stage Processing Division of the Office of PCT Operations for further processing in accordance with this decision. The date under 35 U.S.C. 371(c)(1), (c)(2), and (c)(4) is 08 September 2006.

Richard M. Ross
Attorney Advisor
Office of PCT Legal Administration
Telephone: (571) 272-3296
Facsimile: (571) 273-0459

UNITED STATES PATENT AND TRADEMARK OFFICE

COMMISSIONER FOR PATENTS
UNITED STATES PATENT AND TRADEMARK OFFICE
P.O. BOX 1450
ALEXANDRIA, VA 22313-1450
www.uspto.gov

30 JAN 2008

PHILIPS INTELLECTUAL PROPERTY & STANDARDS
P.O. BOX 3001
BRIARCLIFF MANOR, NY 10510

In re Application of VAN ZUNDERT et al	:	
U.S. Application No.: 10/534,318	:	
PCT Application No.: PCT/IB2003/050015	:	
Int. Filing Date: 06 November 2003	:	DECISION
Priority Date Claimed: 11 November 2002	:	
Attorney Docket No.: NL 021105	:	
For: CIRCUIT ARRANGEMENT FOR OPERATING A HIGH PRESSURE DISCHARGE LAMP	:	

This is in response to applicant's "Petition Under 37 CFR §1.182" filed 23 January 2008.

BACKGROUND

On 06 November 2003, applicant filed international application PCT/IB2003/050015, which claimed priority of an earlier European Patent Office application filed 11 November 2002. A copy of the international application was communicated to the USPTO from the International Bureau on 27 May 2004. The thirty-month period for paying the basic national fee in the United States expired on 11 May 2005.

On 09 May 2005, applicant filed national stage papers in the United States Designated/Elected Office (DO/EO/US). The submission was accompanied by, *inter alia*, the basic national fee required by 35 U.S.C. 371(c)(1).

On 14 February 2006, the DO/EO/US mailed a Notice of Acceptance of Application Under 35 U.S.C. 371 (Form PCT/DO/EO/903).

On 23 January 2008, applicant filed the present petition under 37 CFR 1.182.

DISCUSSION

A review of the application papers filed 09 May 2005 reveals that the incorrect international application number was listed on the Transmittal Letter (Form PTO-1390). The

petition states that the correct international application number should be PCT/IB2003/050015. The content of international application number PCT/IB2003/050015 is consistent with the title, international filing date, priority date, and name of applicants identified on the Transmittal Letter, declaration, and preliminary amendment filed with the national stage papers on 09 March 2005. Applicant's explanation for the error is accepted. A copy of the application papers and a copy of the certified priority document for international application PCT/IB2003/050015 will be placed in the present application file.

CONCLUSION

For the reasons above, the petition under 37 CFR 1.182 is GRANTED.

The Notice of Acceptance of Application under 35 U.S.C. 371 (Form PCT/EO/EO/903) mailed 14 February 2006 is hereby VACATED.

The application has an International Filing Date under 35 U.S.C. 363 of 06 November 2003, and a date under 35 U.S.C. 371(c)(1), (c)(2), and (c)(4) of 09 May 2005.

This application is being forwarded to the United States Designated/Elected Office (DO/EO/US) for further processing in accordance with this decision, including preparation and mailing of a corrected Notice of Acceptance of Application under 35 U.S.C. 371 (Form PCT/EO/EO/903), which should list the international application number as "PCT/IB03/50015".

Bryan Lin

Bryan Lin
PCT Legal Examiner
PCT Legal Office

Telephone: 571-272-3303
Facsimile: 571-273-0459

UNITED STATES PATENT AND TRADEMARK OFFICE

COMMISSIONER FOR PATENTS
UNITED STATES PATENT AND TRADEMARK OFFICE
P.O. BOX 1450
ALEXANDRIA, VA 22313-1450
www.uspto.gov

NXP, B.V.
NXP INTELLECTUAL PROPERTY DEPARTMENT
M/S41-SJ
1109 MCKAY DRIVE
SAN JOSE, CA 95131

COPY MAILED

OCT 17 2007

OFFICE OF PETITIONS

In re Application of :
Royce Lowis :
Application No. 10/534,329 : ON PETITION
Filed: May 9, 2005 :
Attorney Docket No. GB02 0188 US :

This is a decision in response to the petition, filed June 21, 2007, to revive the above-identified application under the provisions of 37 CFR 1.137(b).

The petition is **GRANTED**.

The above-identified application became abandoned for failure to reply in a timely manner to the non-final Office action mailed November 28, 2006, which set a shortened statutory period for reply of one (1) month or thirty (30) days (whichever is later). No extension of time under the provisions of 37 CFR 1.136(a) was obtained. This decision precedes the mailing of a Notice of Abandonment. On June 21, 2007 the present petition was filed.

There is no indication that the person signing the instant petition was ever given a power of attorney or authorization of agent to prosecute the above-identified application. However, in accordance with 37 CFR 1.34(a), the signature of Peter Zawilski appearing on the petition shall constitute a representation to the United States Patent and Trademark Office that he is authorized to represent the particular party on whose behalf he acts.

The petition satisfies the requirements of 37 CFR 1.137(b) in that petitioner has supplied (1) the response in the form of an election of the invention to be examined; (2) the petition fee of $1,500; and (3) an adequate statement of unintentional delay[1].

Telephone inquiries concerning this decision may be directed to the undersigned at (571) 272-3204. All other inquiries regarding this application should be directed to the Technology Center.

[1] 37 CFR 1.137(b)(3) requires a statement that the entire delay in filing the required reply from the due date for the reply until the filing of a grantable petition pursuant to 37 CFR 1.137(b) was unintentional. While the statement is not made by an attorney of record, such statement is being treated as having been made as the result of a reasonable inquiry into the facts and circumstances of such delay. See 37 CFR 10.18(b) and Changes to Patent Practice and Procedure; Final Rule Notice, 62 Fed. Reg. 53131, 53178 (October 10, 1997), 1203 Off. Gaz. Pat. Office 63, 103 (October 21, 1997). In the event that such an inquiry has not been made, petitioner must make such an inquiry. If such inquiry results in the discovery that it is not correct that the entire delay in filing the required reply from the due date for the reply until the filing of a grantable petition pursuant to 37 CFR 1.137(b) was unintentional, petitioner must notify the Office.

The application is being referred to Technology Center AU 2814 for consideration of the response filed June 21, 2007.

Sherry D. Brinkley
Petitions Examiner
Office of Petitions

UNITED STATES PATENT AND TRADEMARK OFFICE

Commissioner for Patents
United States Patent and Trademark Office
P.O. Box 1450
Alexandria, VA 22313-1450
www.uspto.gov

MAILED

MAR 2 4 2010

OFFICE OF PETITIONS

POTOMAC PATENT GROUP PLLC
P. O. BOX 270
FREDERICKSBURG VA 22404

In re Application of	:	
Anthony Spencer	:	
Application No. 10/534,343	:	ON PETITION
Filed: July 18, 2005	:	
Attorney Docket No. 0120-032	:	

This is a decision on the petition under the unintentional provisions of 37 CFR 1.137(b), filed December 10, 2009, to revive the above-identified application.

The petition is **GRANTED**.

The application became abandoned for failure to reply in a timely manner to the final Office action mailed, March 19, 2009, which set a shortened statutory period for reply of three (3) months. No extensions of time under the provisions of 37 CFR 1.136(a) were obtained. Accordingly, the application became abandoned on June 20, 2009. A Notice of Abandonment was mailed on November 25, 2009. A reply was received on July 20, 2009. This reply was not a proper response. An appeal brief was filed on November 16, 2009, but was not proper because a Notice of Appeal was not filed prior to the filing of the appeal brief.

The petition satisfies the requirements of 37 CFR 1.137(b) in that petitioner has supplied (1) the reply in the form of a Notice of Appeal, with the required fee of $270 and Appeal Brief, with the required fee of $270, (2) the petition fee of $810, and (3) a proper statement of unintentional delay. Accordingly, the Notice of Appeal and Appeal Brief are accepted as being unintentionally delayed.

An extension of time under 37 CFR 1.136 must be filed prior to the expiration of the maximum extendable period for reply. *See* In re Application of S., 8 USPQ2d 1630, 1631 (Comm'r Pats. 1988). Since the $490 extension of time fee submitted with the petition on December 10, 2009 was subsequent to the maximum extendable period for reply, this fee is unnecessary and will be credited to petitioner's deposit account.

Telephone inquiries concerning this decision should be directed to Kimberly Inabinet at (571) 272-4618.

This application is being referred to the Technology Center AU 2474 for appropriate action in the normal course of business for processing of the Notice of Appeal and Appeal Brief received December 10, 2009.

/Kimberly Inabinet/

Kimberly Inabinet
Petitions Examiner
Office of Petitions

UNITED STATES PATENT AND TRADEMARK OFFICE

Commissioner for Patents
United States Patent and Trademark Office
P.O. Box 1450
Alexandria, VA 22313-1450
www.uspto.gov

BERENATO & WHITE, LLC
6550 ROCK SPRING DRIVE
SUITE 240
BETHESDA MD 20817

COPY MAILED

OCT 13 2009

OFFICE OF PETITIONS

In re Application of	:	
Parag Karmarkar et al.	:	
Application No. 10/534,362	:	DECISION ON PETITION
Filed: November 7, 2005	:	TO WITHDRAW
Attorney Docket No. 3514.218	:	FROM RECORD
	:	

This is a decision on the Request to Withdraw as attorney or agent of record under 37 C.F.R. § 1.36(b), filed September 10, 2009.

The request is **NOT APPROVED.**

The Office will no longer accept address changes to a new practitioner or law firm filed with a Request, absent the filing of a power of attorney to the new representative. The Office will either change the correspondence address of record to the most current address information provided for the assignee of the entire interest who properly became of record under 37 CFR 3.71 or, if no assignee of the entire interest has properly been made of record under 37 CFR 3.71, the most current address information provided for the first named inventor.

Accordingly, the request to withdraw from record cannot be approved because the request to change the correspondence address does not include a proper power of attorney nor is the address that of: (1) the first named inventor; or (2) an assignee of the entire interest under 37 C.F.R 3.71.

All future communications from the Office will continue to be directed to the above-identified address until otherwise properly notified.

Telephone inquiries concerning this decision should be directed to the undersigned at 571-272-4618.

/Kimberly Inabinet/

Kimberly Inabinet
Petitions Examiner
Office of Petitions

UNITED STATES PATENT AND TRADEMARK OFFICE

Commissioner for Patents
United States Patent and Trademark Office
P.O. Box 1450
Alexandria, VA 22313-1450
www.uspto.gov

12 SEP 2006

Perkins Coie LLP
PO Box 2168
Menlo Park, CA 94026

In re Application of	:	
RIDEOUT, Neil	:	DECISION
Application No.: 10/534,370	:	
PCT No.: PCT/US03/36349	:	ON PETITION UNDER
Int. Filing Date: 12 November 2003	:	
Priority Date: 11 November 2002	:	37 CFR 1.137(b)
Docket No.: 59006-8001.US01	:	
For: MULTICAST VIDEOCONFERENCING	:	

Applicant's "Petition to Revive Unintentionally Abandoned Application Under 37 C.F.R. §1.137(b)," filed in the above-captioned application on 03 July 2006 is **GRANTED**.

Applicant indicates that the entire delay in filing the required reply from the due date for the required reply until the filing of a grantable petition under 37 CFR 1.137(b) was unintentional, as required by 37 CFR 1.137(b)(3). The appropriate national fee and petition fee have been submitted. A terminal disclaimer is not required as the application was filed on or after 08 June 1995. Accordingly, all requirements under 37 CFR 1.137(b) have been satisfied.

Applicant supplied a declaration in compliance with 37 CFR 1.497(a)-(b) during the international phase. The fee for late furnishing of the search fee, examination fee or oath or declaration will be charged to deposit account no. 50-2207, as authorized.

This application is being forwarded to the National Stage Processing Branch of the Office of PCT Operations for continued processing in accordance with this decision. The application has a date of 03 July 2006 under 35 U.S.C. §371(c)(1), (c)(2) and (c)(4).

Erin P. Thomson

Erin P. Thomson
Attorney Advisor
PCT Legal Administration

Telephone: 571-272-3292
Facsimile: 571-273-0459

UNITED STATES PATENT AND TRADEMARK OFFICE

UNITED STATES DEPARTMENT OF COMMERCE
United States Patent and Trademark Office
Address: COMMISSIONER FOR PATENTS
P.O. Box 1450
Alexandria, Virginia 22313-1450
www.uspto.gov

KENYON & KENYON LLP
ONE BROADWAY
NEW YORK, NY 10004

Mail Date: 04/21/2010

Applicant	: Andreas Dietz	: DECISION ON REQUEST FOR
Patent Number	: 7641781	: RECALCULATION of PATENT
Issue Date	: 01/05/2010	: TERM ADJUSTMENT IN VIEW
Appliction No	: 10/534,376	: OF WYETH AND NOTICE OF INTENT TO
Filed	: 10/24/2005	: ISSUE CERTIFICATE OF CORRECTION
		:

The Request for Recalculation is **GRANTED** to the extent indicated.

The patent term adjustment has been determined to be **629** days. The USPTO will *sua sponte* issue a certificate of correction reflecting the amount of PTA days determined by the recalculation.

Prior to the issuance of the certificate of correction, the USPTO will afford patentee an opportunity to be heard and request reconsideration. Accordingly, patentee has **one month or thirty (30) days**, whichever is longer, to file a request for reconsideration of this patent term adjustment calculation. See 35 U.S.C. 154(b)(3)(B)(ii) and 37 CFR 1.322(a)(4). No extensions of time will be granted under 37 CFR 1.136.

Patentee should use document code PET.OP if electronically filing a request for reconsideration of this patent term adjustment calculation. The patentee must also include the information required by 37 CFR 1.705(b)(2) and the fee required by 37 CFR 1.18(e). If patentee does not file a timely request for reconsideration of this patent term adjustment calculation including the information required by 37 CFR 1.705(b)(2) and the fee required by 37 CFR 1.18(e), the USPTO will issue a certificate of correction reflecting the PTA determination noted above.

Patentee should be aware that in order to preserve the right to review in the United States District Court for the District of Columbia of the USPTO patent term adjustment determination, patentee must ensure that he or she also take the steps required under 35 U.S.C. 154(b)(4)(A) in a timely manner. Nothing in the request for recalculation should be construed as providing an alternative time frame for commencing a civil action under 35 U.S.C. 154(b)(4)(A).

Any questions concerning this decision should be directed to the Office of Patent Legal Administration at 571-272-7702.

02 MAR 2006

#6

UNITED STATES PATENT AND TRADEMARK OFFICE

Commissioner for Patents
United States Patent and Trademark Office
P.O. Box 1450
Alexandria, VA 22313-1450
www.uspto.gov

Janis K. Fraser, Ph.D., J.D.
Fish & Richardson, P.C.
P.O. Box 1022
Minneapolis, MN 55440-1022

In re Application of CAWTHORNE Application No.: 10/534,377 PCT No.: PCT/SE03/01760 Int. Filing Date: 13 November 2003 Priority Date: 15 November 2002 Atty Docket No.: 06275-454US1 For: PROCESS TO MINIMIZE LOSS THROUGH ADHESION TO EQUIPMENT SURFACES	DECISION ON PETITION UNDER 37 CFR 1.181

This decision is in response to applicant's "Response to Notification of Missing Requirements" filed 03 January 2006 in the United States Patent and Trademark Office (USPTO). The communication is being treated as a petition under 37 CFR 1.181. No petition fee is required.

BACKGROUND

On 13 November 2003, applicant filed international application PCT/SE03/01760, which claimed a priority date of 15 November 2002. A copy of the international application was communicated to the United States Patent and Trademark Office from the International Bureau on 03 June 2004. Pursuant to 37 CFR 1.495, the deadline for payment of the basic national fee in the United States was to expire 30 months from the priority date, 15 May 2005.

On 09 May 2005, applicant filed a transmittal letter for entry into the national stage in the United States accompanied by the requisite basic national fee and a preliminary amendment.

On 25 November 2005, applicant was mailed a NOTIFICATION OF MISSING REQUIREMENTS UNDER 35 U.S.C. 371 (Form PCT/DO/EO/905) informing applicant of the need to provide an executed oath or declaration of the inventor, in compliance with 37 CFR 1.497(a) and (b), identifying the application by the international application number and international filing date. Applicant was given two months to respond and advised that this time period could be extended with a proper petition and payment of fees.

On 03 January 2006, applicant filed the present petition indicating that a declaration of the inventor and power of attorney had been filed with the original papers on 09 May 2005.

DISCUSSION

Applicant has provided a legible copy of the receipt postcard which shows a USPTO date stamp, "JC03 Rec'd PCT/PTO 09 MAY 2005" and clearly identifies in part: "Combined Declaration and Power of Attorney (2 Pages)" as well as listing the applicant, serial number, title and attorney docket number. The postcard has not been annotated in any way to indicate that the declaration and power of attorney was not received by the Office. The evidence is sufficient to establish that the executed declaration and revocation of power of attorney were received in the USPTO on 09 May 2005. Applicant has certified that the presently filed copy of the document is a true and complete copies of the paper originally filed on 09 May 2005. As such, it is proper to accept the presently filed declaration of inventor Cawthorne as having been filed on 09 May 2005 and to **GRANT** applicant's petition at this time.

CONCLUSION

Applicant's petition under 37 CFR 1.181 is **GRANTED**.

The "NOTIFICATION OF MISSING REQUIREMENTS UNDER 35 U.S.C. 371 (Form PCT/DO/EO/905) mailed 25 November 2005 is hereby **VACATED**.

The application will be given an international filing date of 13 November 2003 under 35 U.S.C. 363 and a date of **09 May 2005** under 35 U.S.C. 371(c)(1), (c)(2) and (c)(4).

This application is being returned to the United States Designated/Elected Office (US/DO/EO) for further processing in accordance with this decision, namely 1) the issuance of a "Notification of Acceptance of Application Under 35 U.S.C. 371 and 37 CFR 1.494 or 1.495" (Form PCT/DO/EO/903) indicating a 371 date as detailed above.

Derek A. Putonen
Attorney Advisor
Office of PCT Legal Administration
Tel: (571) 272-3294
Fax: (571) 273-0459

UNITED STATES PATENT AND TRADEMARK OFFICE

Commissioner for Patents
United States Patent and Trademark Office
P.O. Box 1450
Alexandria, VA 22313-1450
www.uspto

FISH & RICHARD P.C.
P.O. BOX 1022
MINNEAPOLIS, MN 55440-1022

COPY MAILED

JUL 24 2008

In re Application of	:	
Simon Cawthorne	:	
Application No. 10/534,377	:	DECISION ON PETITION
Filed: May 9, 2005	:	
Attorney Docket No. 06275-454US1	:	

This is a decision on the petition under the unintentional provisions of 37 CFR 1.137(b), filed June 3, 2008, to revive the above-identified application.

The petition is **GRANTED**.

The application became abandoned for failure to reply in a timely manner to the non-final Office action mailed, October 2, 2007, which set a shortened statutory period for reply of three (3) months. No extensions of time under the provisions of 37 CFR 1.136(a) were obtained. Accordingly, the application became abandoned on January 3, 2008. A Notice of Abandonment was mailed May 29, 2008.

The petition satisfies the requirements of 37 CFR 1.137(b) in that petitioner has supplied (1) the reply in the form of a continuation, (2) the petition fee of $1,540.00, and (3) an adequate statement of unintentional delay.

The above-identified application is being revived solely for purposes of continuity. As continuity has been established by this decision reviving the above-identified application, the above-identified application is again abandoned in favor of continuing application No. 12/060,385, filed April 1, 2008.

Telephone inquiries concerning this decision should be directed to Joan Olszewski at (571) 272-7751.

Liana Walsh
Petitions Examiner
Office of Petitions

ROTHWELL, FIGG, ERNST & MANBECK

1425 K Street, N.W.
Suite 800
Washington, D.C. 20005

Telephone: (202) 783-6040
Telefax: (202) 783-6031

RECEIVED
CENTRAL FAX CENTER
OCT 17 2008

FACSIMILE TRANSMITTAL SHEET

DATE: October 17, 2008

TO: Mary Diggs, Supervisor
Decisions & Certificates of Correction Branch
United States Patent and Trademark Office
FAX NO.: (571) 273-8300

FROM: David B. Orange, Reg. No. 55,513

REF.: U.S. Patent No. 7,284,580
Applicant: Anne Elizabeth Dallison et al.
Attorney Docket No. 2955-213

Number of Pages Including This Transmittal Sheet: 13

If any problems in connection with this facsimile, please contact: Kevin Mallett at 202-783-6040

MESSAGE, IF ANY:

PLEASE DELIVER THIS FACSIMILE IMMEDIATELY. THANK YOU.

THIS MESSAGE IS INTENDED FOR THE USE OF THE INDIVIDUAL OR ENTITY TO WHICH IT IS ADDRESSED AND MAY CONTAIN INFORMATION THAT IS PRIVILEGED, CONFIDENTIAL AND EXEMPT FROM DISCLOSURE UNDER APPLICABLE LAW. IF THE READER OF THIS MESSAGE IS NOT THE INTENDED RECIPIENT OR THE EMPLOYEE OR AGENCY RESPONSIBLE FOR DELIVERING THE MESSAGE TO THE INTENDED RECIPIENT, YOU ARE HEREBY NOTIFIED THAT ANY DISSEMINATION, DISTRIBUTION OR COPYING OF THIS COMMUNICATION IS STRICTLY PROHIBITED. IF YOU HAVE RECEIVED THIS COMMUNICATION IN ERROR, PLEASE NOTIFY US IMMEDIATELY BY TELEPHONE AND RETURN THE ORIGINAL MESSAGE TO US AT THE ABOVE ADDRESS VIA THE U.S. POSTAL SERVICES. THANK YOU.

RECEIVED
CENTRAL FAX CENTER
OCT 17 2008

PTO/SB/17i (09-08)
Approved for use through 10/31/2008. OMB 0651-0031
U.S. Patent and Trademark Office; U.S. DEPARTMENT OF COMMERCE
Under the Paperwork Reduction Act of 1995, no persons are required to respond to a collection of information unless it displays a valid OMB control number.

PROCESSING FEE
Under 37 CFR 1.17(i)
TRANSMITTAL
(Fees are subject to annual revision)

Send completed form to: Commissioner for Patents
P.O. Box 1450, Alexandria, VA 22313-1450

Application Number	10/534409 - Patent 7,284,580
Filing Date	5/11/2005 - Issued: 10/23/2007
First Named Inventor	Anne E. DALLISON et al.
Art Unit	3751
Examiner Name	Timothy Lewis MAUST
Attorney Docket Number	2955-213

Enclosed is a paper filed under 37 CFR 3.81 **that requires a processing fee (37 CFR 1.17(i)).**
Payment of $ 130.00 **is enclosed.**
This form should be included with the above-mentioned paper and faxed or mailed to the Office using the appropriate Mail Stop, if applicable. *For transmittal of petition fees under 37 CFR 1.17(f), (g) or (h), see form PTO/SB/17p.*

Payment of Fees (small entity amounts are NOT available for the processing fees)

☑ The Commissioner is hereby authorized to charge the following fees to Deposit Account No. 02-2135:
☑ processing fee under 37 CFR 1.17(i) ☑ any deficiency of fees and credit of any overpayments

☐ Check in the amount of $_____ is enclosed.

☐ Payment by credit card (Form PTO-2038 or equivalent enclosed). Do not provide credit card information on this form.

Processing Fees under 37 CFR 1.17(i): Fee $130 Fee Code 1808 for all,
Except for § 1.221 papers (Fee Code 1803)

For papers filed under:
§ 1.28(c)(3) - for processing a non-itemized fee deficiency based on an error in small entity status.
§ 1.41 - for supplying the name or names of the inventor or inventors after the filing date without an oath or declaration as prescribed by § 1.63, except in provisional applications.
§ 1.48 - for correcting inventorship, except in provisional applications.
§ 1.52(d) - for processing a nonprovisional application filed with a specification in a language other than English.
§ 1.53(b)(3) - to convert a provisional application filed under § 1.53(c) into a nonprovisional application under § 1.53(b).
§ 1.55 - for entry of late priority papers.
§ 1.71(g)(2) – to enter an amendment to the specification for purposes of 35 U.S.C. 103(c)(2) if not filed within the cited time periods
§ 1.99(e) - for processing a belated submission under § 1.99.
§ 1.103(b) - for requesting limited suspension of action, continued prosecution application (§ 1.53(d)).
§ 1.103(c) - for requesting limited suspension of action, request for continued examination (§ 1.114).
§ 1.103(d) - for requesting deferred examination of an application.
§ 1.217 - for processing a redacted copy of a paper submitted in the file of an application in which a redacted copy was submitted for the patent application publication.
§ 1.221 - for requesting voluntary publication or republication of an application. **Fee Code 1803**
§ 1.291(c)(5) - for processing a second or subsequent protest by the same real party in interest.
§ 1.497(d) - for filing an oath or declaration pursuant to 35 U.S.C. 371(c)(4) naming an inventive entity different from the inventive entity set forth in the international stage.
§ 3.81 - for a patent to issue to assignee, assignment submitted after payment of the issue fee.

David Orange
Signature

Oct. 17, 2008
Date

David B. Orange
Typed or printed name

55,513
Registration No., if applicable

This collection of information is required by 37 CFR 1.17. The information is required to obtain or retain a benefit by the public which is to file (and by the USPTO to process) an application. Confidentiality is governed by 35 U.S.C. 122 and 37 CFR 1.11 and 1.14. This collection is estimated to take 5 minutes to complete, including gathering, preparing, and submitting the completed application form to the USPTO. Time will vary depending upon the individual case. Any comments on the amount of time you require to complete this form and/or suggestions for reducing this burden, should be sent to the Chief Information Officer, U.S. Patent and Trademark Office, U.S. Department of Commerce, P.O. Box 1450, Alexandria, VA 22313-1450. DO NOT SEND FEES OR COMPLETED FORMS TO THIS ADDRESS. SEND TO: **Commissioner for Patents, P.O. Box 1450, Alexandria, VA 22313-1450.**

If you need assistance in completing the form, call 1-800-PTO-9199 and select option 2.

10/20/2008 FORGAN 00000005 022135 10534409
01 FC:1464 130.00 DA

RECEIVED
CENTRAL FAX CENTER
OCT 17 2008

IN THE UNITED STATES PATENT AND TRADEMARK OFFICE

Patent No.	: 7,284,580
Applicant	: Anne Elizabeth DALLISON, et al.
Issue Date	: October 23, 2007
Docket No.	: 2955-213
Customer No.	: 06449
Confirmation No.	: 7115

PETITION UNDER 37 C.F.R.§ 3.81(b) TO CORRECT PATENT ASSIGNEE

ATTN: Office of Petitions by Facsimile No.: (571) 273-8300
United States Patent
and Trademark Office

Dear Sir:

Responsive to a communication dated September 12, 2008 concerning the above-referenced granted patent, Applicants hereby petition under 37 C.F.R. § 3.81(b) to correct the name of the assignee on the subject patent together with payment of a processing fee of $130.00 as set forth in 37 C.F.R. § 1.20(a).

The assignee listed on the Issue Fee Transmittal Form PTOL-85B, which was submitted with payment of the Issue Fee on September 12, 2007, was incorrect.

A Certificate of Correction under 37 C.F.R. § 1.323 was submitted on March 18, 2008 with payment of a $100 fee (copy attached) to correct the name of the assignee of the subject patent to:

RECKITT BENCKISER HEALTHCARE, Berkshire, U.K.

The Assignment to RECKITT BENCKISER HEALTHCARE, was recorded, as set forth in 37 C.F.R. § 3.11 (before issuance of the patent), on March 27, 2006 at Reel 017507, Frame 0603.

The Office is authorized to charge a processing fee of $130.00, as set forth in 37 C.F.R. §1.17(I), to Deposit Account No. 02-2135. The fee for the Certificate of Correction was paid by previous authorization to withdraw $100.00 from Deposit Account 02-2135 on September 12, 2008.

Please charge any additional fees or credit any overpayment to Deposit Account No. 02-2135. The Commissioner is requested to issue and forward a Certificate of Correction to the undersigned attorney for Applicants in due course.

Respectfully submitted,

Oct. 17, 2008

By: _____

David B. Orange
Attorney for Applicants
Registration No. 55,513
ROTHWELL, FIGG, ERNST & MANBECK, p.c.
Suite 800, 1425 K Street, N.W.
Washington, D.C. 20005
Telephone: (202)783-6040

RBM/DBO:kdm

Attachments

1537929_1

UNITED STATES PATENT AND TRADEMARK OFFICE
CERTIFICATE OF CORRECTION

PATENT NO. : 7,284,580

DATED : October 23, 2007

INVENTOR(S) : Anne Elizabeth DALLISON, Shaun HARRISON

It is certified that error appears in the above-identified patent and that said Letters Patent are hereby corrected as shown below:

The name of the Assignee should read:

RECKITT BENCKISER HEALTHCARE (UK) LIMITED

and the Residence of the Assignee should read:

Berkshire, UNITED KINGDOM

MAILING ADDRESS OF SENDER:

Rothwell, Figg, Ernst & Manbeck
1425 K Street, N.W., Suite 800
Washington, D.C. 20005

1469405

PATENT NO. 7,284,580

No. of additional copies _____

Privacy Act Statement

The **Privacy Act of 1974 (P.L. 93-579)** requires that you be given certain information in connection with your submission of the attached form related to a patent application or patent. Accordingly, pursuant to the requirements of the Act, please be advised that: (1) the general authority for the collection of this information is 35 U.S.C. 2(b)(2); (2) furnishing of the information solicited is voluntary; and (3) the principal purpose for which the information is used by the U.S. Patent and Trademark Office is to process and/or examine your submission related to a patent application or patent. If you do not furnish the requested information, the U.S. Patent and Trademark Office may not be able to process and/or examine your submission, which may result in termination of proceedings or abandonment of the application or expiration of the patent.

The information provided by you in this form will be subject to the following routine uses:

1. The information on this form will be treated confidentially to the extent allowed under the Freedom of Information Act (5 U.S.C. 552) and the Privacy Act (5 U.S.C 552a). Records from this system of records may be disclosed to the Department of Justice to determine whether disclosure of these records is required by the Freedom of Information Act.
2. A record from this system of records may be disclosed, as a routine use, in the course of presenting evidence to a court, magistrate, or administrative tribunal, including disclosures to opposing counsel in the course of settlement negotiations.
3. A record in this system of records may be disclosed, as a routine use, to a Member of Congress submitting a request involving an individual, to whom the record pertains, when the individual has requested assistance from the Member with respect to the subject matter of the record.
4. A record in this system of records may be disclosed, as a routine use, to a contractor of the Agency having need for the information in order to perform a contract. Recipients of information shall be required to comply with the requirements of the Privacy Act of 1974, as amended, pursuant to 5 U.S.C. 552a(m).
5. A record related to an International Application filed under the Patent Cooperation Treaty in this system of records may be disclosed, as a routine use, to the International Bureau of the World Intellectual Property Organization, pursuant to the Patent Cooperation Treaty.
6. A record in this system of records may be disclosed, as a routine use, to another federal agency for purposes of National Security review (35 U.S.C. 181) and for review pursuant to the Atomic Energy Act (42 U.S.C. 218(c)).
7. A record from this system of records may be disclosed, as a routine use, to the Administrator, General Services, or his/her designee, during an inspection of records conducted by GSA as part of that agency's responsibility to recommend improvements in records management practices and programs, under authority of 44 U.S.C. 2904 and 2906. Such disclosure shall be made in accordance with the GSA regulations governing inspection of records for this purpose, and any other relevant (*i.e.*, GSA or Commerce) directive. Such disclosure shall not be used to make determinations about individuals.
8. A record from this system of records may be disclosed, as a routine use, to the public after either publication of the application pursuant to 35 U.S.C. 122(b) or issuance of a patent pursuant to 35 U.S.C. 151. Further, a record may be disclosed, subject to the limitations of 37 CFR 1.14, as a routine use, to the public if the record was filed in an application which became abandoned or in which the proceedings were terminated and which application is referenced by either a published application, an application open to public inspection or an issued patent.
9. A record from this system of records may be disclosed, as a routine use, to a Federal, State, or local law enforcement agency, if the USPTO becomes aware of a violation or potential violation of law or regulation.

Electronic Acknowledgement Receipt

EFS ID:	3012085
Application Number:	10534409
International Application Number:	
Confirmation Number:	7115
Title of Invention:	IMPROVEMENTS IN AND RELATING TO LIQUID DISPENSING
First Named Inventor/Applicant Name:	Anne Elizabeth Dallison
Customer Number:	6449
Filer:	David Benjamin Orange/Jessica Fu
Filer Authorized By:	David Benjamin Orange
Attorney Docket Number:	2955-213
Receipt Date:	18-MAR-2008
Filing Date:	11-MAY-2005
Time Stamp:	12:37:58
Application Type:	U.S. National Stage under 35 USC 371

Payment information:

Submitted with Payment	yes
Payment Type	Deposit Account
Payment was successfully received in RAM	$100
RAM confirmation Number	7364
Deposit Account	022135
Authorized User	

The Director of the USPTO is hereby authorized to charge indicated fees and credit any overpayment as follows:

Charge any Additional Fees required under 37 C.F.R. 1.492 (National application filing, search, and examination fees)

Charge any Additional Fees required under 37 C.F.R. Section 1.17 (Patent application and reexamination processing fees)

Charge any Additional Fees required under 37 C.F.R. Section 1.19 (Document supply fees)

Charge any Additional Fees required under 37 C.F.R. Section 1.20 (Post Issuance fees)

Charge any Additional Fees required under 37 C.F.R. Section 1.21 (Miscellaneous fees and charges)

File Listing:

Document Number	Document Description	File Name	File Size(Bytes) /Message Digest	Multi Part /.zip	Pages (if appl.)
1	Request for Certificate of Correction	Certificate_Correction.pdf	87691 1f7ed746b2bdd5da7b387bf2191c3569fdbfc20b	no	3
Warnings:					
Information:					
2	Fee Worksheet (PTO-06)	fee-info.pdf	8182 6809664442 16b93e0f530e2d2d165ec07953214c	no	2
Warnings:					
Information:					
		Total Files Size (in bytes):	95873		

This Acknowledgement Receipt evidences receipt on the noted date by the USPTO of the indicated documents, characterized by the applicant, and including page counts, where applicable. It serves as evidence of receipt similar to a Post Card, as described in MPEP 503.

New Applications Under 35 U.S.C. 111
If a new application is being filed and the application includes the necessary components for a filing date (see 37 CFR 1.53(b)-(d) and MPEP 506), a Filing Receipt (37 CFR 1.54) will be issued in due course and the date shown on this Acknowledgement Receipt will establish the filing date of the application.

National Stage of an International Application under 35 U.S.C. 371
If a timely submission to enter the national stage of an international application is compliant with the conditions of 35 U.S.C. 371 and other applicable requirements a Form PCT/DO/EO/903 indicating acceptance of the application as a national stage submission under 35 U.S.C. 371 will be issued in addition to the Filing Receipt, in due course.

New International Application Filed with the USPTO as a Receiving Office
If a new international application is being filed and the international application includes the necessary components for an international filing date (see PCT Article 11 and MPEP 1810), a Notification of the International Application Number and of the International Filing Date (Form PCT/RO/105) will be issued in due course, subject to prescriptions concerning national security, and the date shown on this Acknowledgement Receipt will establish the international filing date of the application.

RECEIVED
CENTRAL FAX CENTER
OCT 17 2008

IN THE UNITED STATES PATENT AND TRADEMARK OFFICE

Patent No. : 7,284,580
Applicant : Anne Elizabeth DALLISON, et al.
Issue Date : October 23, 2007

Docket No. : 2955-213
Customer No. : 06449
Confirmation No. : 7115

REQUEST FOR CERTIFICATE OF CORRECTION
UNDER 37 CFR § 1.323

Director of the United States Patent
and Trademark Office
P.O. Box 1450
Alexandria, Virginia 22313-1450

Dear Sir:

In proofreading the above-identified Deed of Letters Patent, an error was noted for which it is requested that a Certificate of Correction be issued.

The error is listed on the attached sheet of Form PTO 1050.

Since the error occurred on the part of Applicant, please charge $100.00 to cover the cost of the required fee to Deposit Account No. 02-2135. Please charge any additional fees or credit any overpayment to Deposit Account No. 02-2135. The Commissioner is requested to issue and forward a Certificate of Correction to the undersigned attorney for Applicant in due course.

Respectfully submitted,

By ___/David Orange/_____

David B. Orange
Attorney for Applicants
Registration No. 55,513
ROTHWELL, FIGG, ERNST & MANBECK, p.c.
Suite 800, 1425 K Street, N.W.
Washington, D.C. 20005
Telephone: (202)783-6040

UNITED STATES PATENT AND TRADEMARK OFFICE

CERTIFICATE OF CORRECTION

PATENT NO. : 7,284,580

DATED : October 23, 2007

INVENTOR(S) : Anne Elizabeth DALLISON, Shaun HARRISON

It is certified that error appears in the above-identified patent and that said Letters Patent are hereby corrected as shown below:

The name of the Assignee should read:

RECKITT BENCKISER HEALTHCARE (UK) LIMITED

and the Residence of the Assignee should read:

Berkshire, UNITED KINGDOM

MAILING ADDRESS OF SENDER:

Rothwell, Figg, Ernst & Manbeck
1425 K Street, N.W., Suite 800
Washington, D.C. 20005

1469405

PATENT NO. 7,284,580

No. of additional copies _____

RECEIVED
CENTRAL FAX CENTER
OCT 17 2008

United States Patent and Trademark Office

Assignments on the Web > Patent Query

Patent Assignment Abstract of Title

NOTE:Results display only for issued patents and published applications. For pending or abandoned applications please consult USPTO staff.

Total Assignments: 2

Patent #: 7284580 **Issue Dt:** 10/23/2007 **Application #:** 10534409 **Filing Dt:** 05/11/2005

Publication #: 20060027282 **Pub Dt:** 02/09/2006

Inventor: *** PALM SYSTEM IS NOT AVAILABLE ***

Title: IMPROVEMENTS IN AND RELATING TO LIQUID DISPENSING

Assignment: 1

Reel/Frame: 016940/0246 **Recorded:** 10/26/2005 **Pages:** 2

Conveyance: ASSIGNMENT OF ASSIGNORS INTEREST (SEE DOCUMENT FOR DETAILS).

Assignors: DALLISON, ANNE ELIZABETH **Exec Dt:** 05/31/2005

HARRISON, SHAUN **Exec Dt:** 06/06/2005

Assignee: BOOTS HEALTHCARE INTERNATIONAL LIMITED
THANE ROAD WEST
NOTTINGHAM, NG2 3AA, UNITED KINGDOM

Correspondent: ROTHWELL, FIGG, ERNST & MANBECK
SUITE 800
1425 K ST., N.W.
WASHINGTON, D.C. 20005

Assignment: 2

Reel/Frame: 017507/0603 **Recorded:** 04/20/2006 **Pages:** 16

Conveyance: ASSIGNMENT OF ASSIGNORS INTEREST (SEE DOCUMENT FOR DETAILS).

Assignor: BOOTS HEALTHCARE INTERNATIONAL LIMITED **Exec Dt:** 03/27/2006

Assignee: RECKITT BENCKISER HEALTHCARE (UK) LIMITED
103-105 BATH ROAD
SLOUGH, BERKSHIRE, SL1 3UH, UNITED KINGDOM

Correspondent: ROTHWELL, FIGG, ERNST & MANBECK
SUITE 800
1425 K ST., N.W.
WASHINGTON, D.C. 20005

Search Results as of: 02/11/2008 03:17 PM

If you have any comments or questions concerning the data displayed, contact PRD / Assignments at 571-272-3350. v.2.0.1

Web Interface last modified: April 20, 2007 v.2.0.1

PAGE 11/13 * RCVD AT 10/17/2008 4:57:11 PM [Eastern Daylight Time] * SVR:USPTO-EFXRF-6/26 * DNIS:2738300 * CSID:202 783 6031 * DURATION (mm-ss):05-44

RECEIVED
CENTRAL FAX CENTER
OCT 17 2008

UNITED STATES PATENT AND TRADEMARK OFFICE

Commissioner for Patents
United States Patent and Trademark Office
P.O. Box 1450
Alexandria, VA 22313-1450
www.uspto.gov

RECEIVED/FACILITIES
ROTHWELL FIGG ERNST & MANBECK
FILE NO.: 28135-213
FAC PROC. INIT. AK
SEP 18 2008
DKT ENTRY: EB
SEND TO: RBM/DO
OK TO FILE:

Date : September 12, 2008

Patent No. :7,284,580
Inventor(s) :Anne Elizabeth Dallison, et al.
Issued :October 23, 2007
Title :IMPROVEMENTS IN AND RELATING TO LIQUID DISPENSING

Re: Request for Certificate of Correction

Consideration has been given your request for the issuance of a certificate of correction for the above-identified patent under the provisions of 37 CFR 1.322 and/or 1.323.

Assignees' names and addresses (assignment data) printed in a patent are based *solely* on information supplied in the appropriate space for identifying the assignment data, i.e., item 3 of the Fee(s) Transmittal Form PTOL-85B. After payment of the issue fee, correction of assignment data submitted on the PTOL-85B can only be done by Certificate of Correction under 37 CFR 1.323, with a request under 37 CFR 3.81(b).

A request for a patent to be corrected to state the name of the assignee must:

A. state that the assignment was submitted for recordation as set forth in 37 CFR 3.11 before issuance of the patent;

B. include a request for a certificate of correction under 37 CFR 1.323 along with the fee set forth in 37 CFR 1.20(a); and

C. include the processing fee set forth in 37 CFR 1.17(i).

If the request is granted, Certificates of Correction Branch will be notified that a Certificate of Correction may be issued.

See Manual of Patent Examining Procedure, Section 1481.01 (Rev. 3) (Oct. 2005).

Applicant has not included items A and or C above, accordingly, the request for Certificate of Correction to add or change the assignee data is dismissed.

Any request under 37 CFR 3.81(b) should be directed to the following address or facsimile number:

By mail: Mail Stop PETITIONS
Commissioner for Patents
Post Office Box 1450
Alexandria, VA 22313-1450

By hand: Customer Service Window
Randolph Building
401 Dulany Street
Alexandria, VA 22314

By fax: 571-273-8300
ATTN: Office of Petitions

Any inquiry concerning this communication should be directed to Ms. A. Green at (703) 308-9380 ext. 123.

Abigail Green

Mary Diggs, Supervisor
Decisions & Certificates
of Correction Branch
(703) 308-9390 or (703) 308-9380 Ext. 123

Rothwell, Figg, Ernst & Manbeck
1425 K Street, N.W.
Ste 800
Washington, DC 20005

/arg

RECEIVED/FACILITIES
ROTHWELL FIGG ERNST & MANBECK
FILE NO.:
FAC PROC. INIT. AK
SEP 18 2008
DKT ENTRY:
SEND TO:
OK TO FILE:

SPE RESPONSE FOR CERTIFICATE OF CORRECTION

Paper No.: _____

DATE : 04-12-08

TO SPE OF : ART UNIT 3600

SUBJECT : Request for Certificate of Correction for Appl. No.: **10/534413** Patent No.: **7275456**

Please respond to this request for a certificate of correction within 7 days.

Please review the requested changes/corrections as shown in the **COCIN** document(s) in the IFW application image. No new matter should be introduced, nor should the scope or meaning of the claims be changed.

Please complete the response (see below) and forward the completed response to scanning using document code **COCX**.

Angela Green
Certificates of Correction Branch
703.308.9380 ext. 123

Thank You For Your Assistance

The request for issuing the above-identified correction(s) is hereby:
Note your decision on the appropriate box.

- ☑ **Approved** — All changes apply.
- ☐ **Approved in Part** — Specify below which changes **do not** apply.
- ☐ **Denied** — State the reasons for denial below.

Comments: _____

RICHARD RIDLEY
SUPERVISORY PATENT EXAMINER
SPE **Art Unit**

UNITED STATES PATENT AND TRADEMARK OFFICE

COMMISSIONER FOR PATENTS
UNITED STATES PATENT AND TRADEMARK OFFICE
P.O. BOX 1450
ALEXANDRIA, VA 22313-1450
www.uspto.gov

FOLEY AND LARDNER LLP
SUITE 500
3000 K STREET NW
WASHINGTON DC 20007

MAILED

MAR 16 2009

OFFICE OF PETITIONS

In re Application of :
Toyooka, et al. : LETTER REGARDING PTA
Application No. 10/534,414 :
Filed: May 11, 2005 :
Atty. Dkt. No.: : 074129-0521 :

This letter is in response to the "COMMUNICATION REGARDING PATENT TERM ADJUSTMENT," filed December 2, 2008. The Office thanks applicants for their good faith and candor in bringing this to our attention.

The Determination of Patent Term Adjustment mailed October 9, 2008 indicated that the above-identified application was entitled to a patent term adjustment ("PTA") of 419 days. Applicants indicate that this adjustment differs from than that determined by applicants. The issue fee was received December 30, 2008.

The correct Patent Term Adjustment ("PTA") at the time of the allowance is 404 days.

The application is entitled to an adjustment of 427 days, rather than 442 days, in accordance with 37 CFR 1.703(a)(1) in connection with the mailing of the restriction requirement on September 26, 2007. The adjustment commenced July 27, 2006 and ended September 26, 2007.

The adjustment is properly reduced two days in accordance with 37 CFR 1.704(b) in connection with the response to non-final Office action filed February 25, 2008.

The adjustment is further reduced 21 days in accordance with 37 CFR 1.704(b) in connection with the response to final Office action filed September 19, 2008.

Accordingly, at the time of allowance, the application is entitled to an adjustment of 404 days (adjustments totalling 427 days less reductions totalling 23 days).

As applicants are advising us of a potential error in providing too much patent term adjustment in this application, no fee is due in connection with this matter.

The patent term adjustment indicated in the patent will include any additional patent term accrued pursuant to §§ 1.702(a)(4) and 1.702(b).

This application is being forward to the Office of Data Management for issuance of the patent.

Telephone inquiries specific to this decision should be directed to the Alesia M. Brown at (571) 272-3205.

Kery Fries

Kery Fries
Senior Patent Attorney
Office of Patent Legal Administration
Office of Deputy Commissioner
for Patent Examination Policy

Enclosure: Copy of Adjustment PAIR Calculation

Day : Monday
Date: 3/16/2009

PALM INTRANET

Time: 10:24:56

PTA Calculations for Application: 10/534414			
Application Filing Date:	05/11/2005	PTO Delay (PTO):	442
Issue Date of Patent:		Three Years:	0
Pre-Issue Petitions:	0	Applicant Delay (APPL):	23
Post-Issue Petitions:	0	Total PTA (days):	404
PTO Delay Adjustment:	-15		

File Contents History

Number	Date	Contents Description	PTO	APPL	START
64	03/16/2009	ADJUSTMENT OF PTA CALCULATION BY PTO		15	
55	10/09/2008	MAIL NOTICE OF ALLOWANCE			
54	10/01/2008	ISSUE REVISION COMPLETED			
53	10/01/2008	DOCUMENT VERIFICATION			
52	10/01/2008	NOTICE OF ALLOWANCE DATA VERIFICATION COMPLETED			
51	10/01/2008	NOTICE OF ALLOWABILITY			
50	09/19/2008	AMENDMENT AFTER FINAL REJECTION		21	39
49	09/19/2008	REQUEST FOR EXTENSION OF TIME - GRANTED			
44	10/01/2008	CASE DOCKETED TO EXAMINER IN GAU			
42	09/09/2008	DATE FORWARDED TO EXAMINER			
41	08/29/2008	AMENDMENT AFTER FINAL REJECTION			
40	02/25/2008	INFORMATION DISCLOSURE STATEMENT (IDS) FILED		0	32
39	05/29/2008	MAIL FINAL REJECTION (PTOL - 326)			
38	05/27/2008	FINAL REJECTION			
36	02/25/2008	INFORMATION DISCLOSURE STATEMENT CONSIDERED			
35	02/25/2008	AFFIDAVIT(S) (RULE 131 OR 132) OR EXHIBIT(S) RECEIVED			
34	02/25/2008	INFORMATION DISCLOSURE STATEMENT (IDS) FILED			
33	03/20/2008	DATE FORWARDED TO EXAMINER			
32	02/25/2008	RESPONSE AFTER NON-FINAL ACTION		2	30
31	02/25/2008	INFORMATION DISCLOSURE STATEMENT (IDS) FILED			
30	11/23/2007	MAIL NON-FINAL REJECTION			

29	11/21/2007	NON-FINAL REJECTION			
28	05/11/2005	INFORMATION DISCLOSURE STATEMENT CONSIDERED			
27	02/23/2007	INFORMATION DISCLOSURE STATEMENT CONSIDERED			
24	11/10/2007	DATE FORWARDED TO EXAMINER			
23	10/26/2007	RESPONSE TO ELECTION / RESTRICTION FILED			
22	09/26/2007	MAIL RESTRICTION REQUIREMENT	442		-1
21	09/24/2007	REQUIREMENT FOR RESTRICTION / ELECTION			
20	09/19/2007	CASE DOCKETED TO EXAMINER IN GAU			
19	06/19/2007	CASE DOCKETED TO EXAMINER IN GAU			
18	02/23/2007	REFERENCE CAPTURE ON IDS			
17.7	02/23/2007	INFORMATION DISCLOSURE STATEMENT (IDS) FILED			
17	02/23/2007	INFORMATION DISCLOSURE STATEMENT (IDS) FILED			
16	02/08/2006	IFW TSS PROCESSING BY TECH CENTER COMPLETE			
15	02/08/2006	CASE DOCKETED TO EXAMINER IN GAU			
14	08/30/2005	PRELIMINARY AMENDMENT			
13	06/09/2005	OATH OR DECLARATION FILED (INCLUDING SUPPLEMENTAL)			
12	05/11/2005	PRELIMINARY AMENDMENT			
11.7	05/11/2005	INFORMATION DISCLOSURE STATEMENT (IDS) FILED			
11	05/11/2005	INFORMATION DISCLOSURE STATEMENT (IDS) FILED			
10	05/11/2005	REQUEST FOR FOREIGN PRIORITY (PRIORITY PAPERS MAY BE INCLUDED)			
9	12/06/2005	CLEARED BY OIPE CSR			
8	12/06/2005	CLEARED BY OIPE CSR			
7	11/27/2005	CLEARED BY OIPE CSR			
6	11/27/2005	CLEARED BY OIPE CSR			
5	05/26/2005	371 COMPLETION DATE			
4	11/03/2005	APPLICATION DISPATCHED FROM OIPE			
3	11/03/2005	NOTICE OF DO/EO ACCEPTANCE MAILED			
2	06/23/2005	PCT CLASSIFICATION			
1	05/11/2005	INITIAL EXAM TEAM NN			

Search Another: Application# [ ] Search

EXPLANATION OF PTA CALCULATION

EXPLANATION OF PTE CALCULATION

To go back, right click here and select Back. To go forward, right click here and select Forward. To refresh, right click here and select Refresh.

Back to OASIS | Home page

OIPE
DEC 02 2008
PATENT & TRADEMARK OFFICE

93 ITW
B

Atty. Dkt. No. 074129-0521

IN THE UNITED STATES PATENT AND TRADEMARK OFFICE

Applicant: Kouhei TOYOOKA, et al.

Title: ISOINDOLINE DERIVATIVES

Appl. No.: 10/534,414

International Filing Date: 11/25/2003

371(c) Date: 05/11/2005

Examiner: Noble E. JARRELL

Art Unit: 1624

Conf. No.: 7101

COMMUNICATION REGARDING PATENT TERM ADJUSTMENT

Commissioner for Patents
P.O. Box 1450
Alexandria, VA 22313-1450

Sir:

In accordance with Applicants duty of candor and good faith of the U.S. Patent and Trademark Office, Applicants note that the 440 days of patent term adjustment as indicated on the Notice of Allowance mailed on October 6, 2008, for the above-captioned application disagrees with the Applicants' own calculation of Patent Term Adjustment. It is hereby requested that the Patent Office verify the calculation of the Patent Term Adjustment for the present application.

Respectfully submitted,

Date December 2, 2008

By Ann E. Summerfield

FOLEY & LARDNER LLP
Customer Number: 22428
Telephone: (202) 672-5300
Facsimile: (202) 672-5399

Ann E. Summerfield
Attorney for Applicant
Registration No. 47,982

Publish or Perish Software Press

*The **Date Calculator Applet** may take several minutes to load, depending on your connection speed.*

*Using a PDA? Click here for more information on **DOYDIFF**, a Date Calculator for both the Palm and the Pocket PC.*

*New for **Pocket PC 2003**: **DOYDIFF 2003**.*

amazon.com

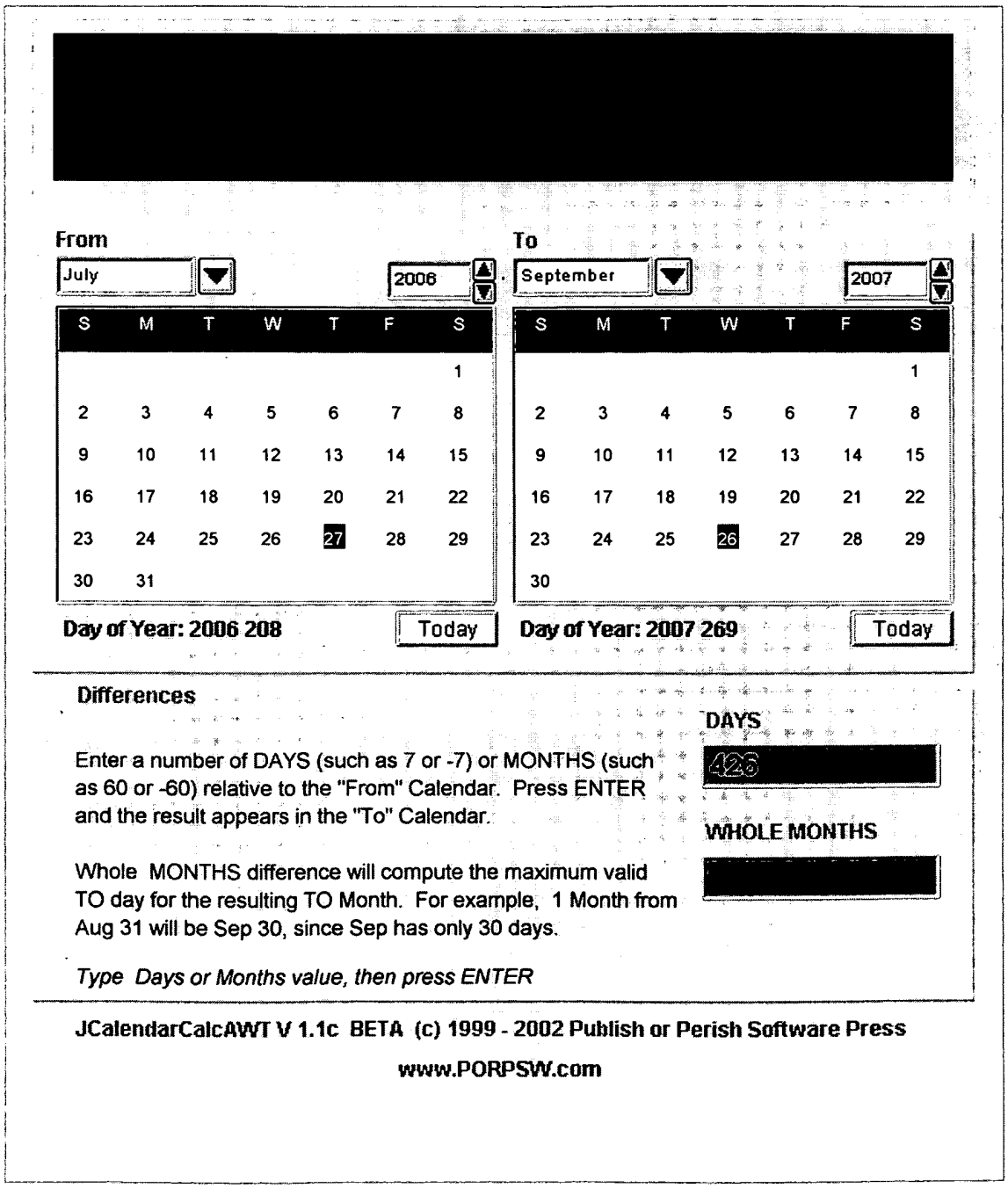

As time always moves forward, the Years, Months, Days breakdown is always computed from the lesser

UNITED STATES PATENT AND TRADEMARK OFFICE

COMMISSIONER FOR PATENTS
UNITED STATES PATENT AND TRADEMARK OFFICE
P.O. BOX 1450
ALEXANDRIA, VA 22313-1450
www.uspto.gov

FOLEY AND LARDNER LLP
SUITE 500
3000 K STREET NW
WASHINGTON DC 20007

COPY MAILED

DEC 15 2009

OFFICE OF PETITIONS

In re Patent No. 7,521,451 :
Issued: April 21, 2009 :
Application No. 10/534,414 : PATENT TERM ADJUSTMENT
Filing or 371(c) Date: May 11, 2005 :
Dkt. No.: 074129-0521 :

This is a decision on the "REQUEST FOR RECONSIDERATION OF PATENT TERM ADJUSTMENT UNDER 37 CFR 1.705," filed April 24, 2009. This matter is being properly treated under 37 CFR 1.705(d).

Patentees request correction of the patent term adjustment from 404 days to 764 days. Patentees requested this correction on the basis that the Office took in excess of three years to issue the above-referenced patent. Patentees also contest the holding set forth in the Letter mailed March 16, 2009.

The application for patent term adjustment (PTA) under 37 CFR 1.705(d) is **DISMISSED**.

The above-identified application matured into U.S. Pat. No. 7,521,451 on April 21, 2009. The patent issued with a patent term adjustment of 404 days. The instant application for patent term adjustment was timely filed in accordance with 37 CFR 1.705(d). Applicants argue that in view of Wyeth v. Dudas, 580 F. Supp. 2d 138, 88 U.S.P.Q. 2d 1538 (D.D.C. 2008), the patent is entitled to an adjustment of 764 days (442 days pursuant to 35 USC 154(b)(1)(A) *plus* 345 days pursuant to 35 USC 154(b)(1)(B) *less* 23 days of applicant delay).

Patentees assert that the Office indicated that the date of commencement of the instant application is July 27, 2006 in a Letter mailed March 16, 2009. This assertion is in error as the Letter mailed March 16, 2009 set forth that July 27, 2006 is the date upon which adjustment pursuant to 37 CFR 1.702(a)(1) *commenced.*

Patentees further request that the "15 day reduction taken with the mailing of the Letter Regarding PTA mailed March 16, 2009, was in error." Patentees are again advised that the period of adjustment pursuant to 37 CFR 1.702(a)(1) is found to be 427 days and not 442 days. Accordingly, the calculation was adjusted by removing 15 days of PTA delay to net an overall adjustment of 404 days (442 days of adjustment pursuant to 37 CFR 1.702(a)(1) *less* 23 days of applicant delay *equals* 404 days).

In accordance with 37 CFR 1.702(a)(1), an application is subject to patent term adjustment for the Office's failure to mail at least one of a notification under 35 U.S.C. 132 or a notice of

allowance under 35 U.S.C. 151 not later than fourteen months after the date on which the application was filed under 35 U.S.C. 111(a) or fulfilled the requirements of 35 U.S.C. 371 in an international application. The instant application fulfilled the requirements of 35 USC 371 on May 26, 2005, as indicated on the Notice of Acceptance of Application under 35 USC 371 and 37 CFR 1.495 mailed November 3, 2005.

An application does not per se fulfill the requirements of 35 USC 371 upon the *receipt* of the 35 USC 371(c)(1), (c)(2), and (c)(4). An application fulfills the requirements of 35 USC 371 upon the *latest* of:

(A) the date of submission of the basic national fee;
(B) the date of submission or communication of the copy of the international application;
(C) the date of submission of the translation of the international application if the international application is not in the English language;
(D) the date of submission of an oath or declaration of the inventor in compliance with 35 U.S.C. 371 (c)(4) (see 37 CFR 1.497(c) for an explanation of when an oath or declaration will be accepted as complying with 35 U.S.C. 371(c)(4));
(E) the earlier of 30 months from the priority date or the date of request for early processing under 35 U.S.C. 371(f) if requested prior to 30 months from the priority date (Form PCT/DO/EO/903 will indicate the date early processing was requested);
(F) if a request for early processing has not been requested prior to 30 months from the priority date, the date of submission of any translation of the annexes to the international preliminary examination report if the translation of the annexes are filed within the time period set in a Notification of Missing Requirements (Form PCT/DO/EO/905) requiring either an English translation of the international application or an oath or declaration; and
(G) the date of submission of any surcharge for submitting the oath or declaration later than 30 months from the priority date.

See, MPEP 1893.03(b).

Thus, in accordance with 37 CFR 1.703(a)(1), the period of adjustment of 427 days pursuant to 37 CFR 1.702(a)(1) commenced July 27, 2006 and ended September 26, 2007, the date that the restriction requirement was mailed.

Accordingly, the request for restoration 15 days of adjustment is hereby DISMISSED.

Patentees further argue that the "commencement date of the present application is 14 months from the date of receipt of all requirements under 35 USC 371, which was July 11, 2006." This calculation is in error, as discussed herein.

As to patentees request for an additional adjustment of 345 days pursuant to 37 CFR 1.702(b), patentees are advised that under 37 CFR 1.703(f), patentees are entitled to a period of patent term adjustment equal to the period of delays based on the grounds set forth in 37 CFR 1.702 reduced by the period of time equal to the period of time during which patentees failed to engage in reasonable efforts to conclude prosecution pursuant to 37 CFR 1.704. In other words, patentees are entitled to the period of Office delay reduced by the period of applicant delay.

The Office asserts that as of the issuance of the patent on April 21, 2009, the application was pending three years and 330 days after the national stage commenced under 35 U.S.C. 371(b) or (f) in an international application. The commencement date is the date 30 months from the earliest priority date claimed in the international application. In this application, the earliest priority date claimed, as shown on the Notice of Acceptance of Application Under 35 U.S.C. § 371 and 37 CFR 1.495, mailed November 3, 2005, is November 26, 2002. Accordingly, the commencement date is May 26, 2005, and the period of adjustment pursuant to 37 CFR 1.703(b) began May 27, 2008, the day after the date that is three years after the date that national stage commenced, and ended April 21, 2009, the date that the patent issued, or 330 days.

The Office asserts that certain action was not taken within the specified time frame, and thus, the adjustment of 427 days pursuant to 37 CFR 1.702(a)(1) is correct. At issue is whether patentees should accrue 330 days of patent term adjustment for the Office taking in excess of three years to issue the patent, as well as 427 days for Office failure to take a certain action within a specified time frame (or examination delay).

The Office contends that the period of 330 days of delay in issuance of the patent under 37 CFR 1.702(b) overlaps with the period of 427 days of examination delay under 37 CFR 1.702(a)(1). Patentees' calculation of the period of overlap is inconsistent with the Office's interpretation of this provision. 35 U.S.C. 154(b)(2)(A) limits the adjustment of patent term, as follows:

35 U.S.C. 154(b)(2)(A) limits the adjustment of patent term, as follows:

> To the extent that the periods of delay attributable to grounds specified in paragraph (1) overlap, the period of any adjustment granted under this subsection shall not exceed the actual number of days the issuance of the patent was delayed.

As explained in *Explanation of 37 CFR 1.703(f)*[1] *and of the United States Patent and Trademark Office Interpretation of 35 U.S.C. 154(b)(2)(A)*, 69 Fed. Reg. 34283 (June 21, 2004), the Office interprets 35 U.S.C. 154(b)(2)(A) as permitting either patent term adjustment under 35 U.S.C. 154(b)(1)(A)(i)-(iv), or patent term adjustment under 35 U.S.C. 154(b)(1)(B), but not as permitting patent term adjustment under both 35 U.S.C. 154(b)(1)(A)(i)-(iv) and 154(b)(1)(B). Accordingly, the Office implements the overlap provision as follows:

> If an application is entitled to an adjustment under 35 U.S.C. 154(b)(1)(B), the entire period during which the application was pending (except for periods excluded under 35 U.S.C. 154(b)(1)(B)(i)-(iii)), and not just the period beginning three years after the actual filing date of the application, is the period of delay under 35 U.S.C. 154(b)(1)(B) in

---

[1] Likewise, 37 CFR 1.703(f) provides that:

> To the extent that periods of delay attributable to the grounds specified in §1.702 overlap, the period of adjustment granted under this section shall not exceed the actual number of days the issuance of the patent was delayed.

determining whether periods of delay overlap under 35 U.S.C. 154(b)(2)(A). Thus, any days of delay for Office issuance of the patent more than 3 years after the filing date of the application, which overlap with the days of patent term adjustment accorded prior to the issuance of the patent will not result in any additional patent term adjustment. See 35 U.S.C. 154(b)(1)(B), 35 U.S.C. 154(b)(2)(A), and 37 CFR § 1.703(f). See *Changes to Implement Patent Term Adjustment Under Twenty Year Term; Final Rule*, 65 Fed. Reg. 54366 (Sept. 18, 2000). See also *Revision of Patent Term Extension and Patent Term Adjustment Provisions; Final Rule*, 69 Fed. Reg. 21704 (April 22, 2004), 1282 Off. Gaz. Pat. Office 100 (May 18, 2004).

Further, as stated in the *Explanation of 37 CFR 1.703(f) and of the United States Patent and Trademark Office Interpretation of 35 U.S.C. 154(b)(2)(A)*, the Office has consistently taken the position that if an application is entitled to an adjustment under the three-year pendency provision of 35 U.S.C. 154(b)(1)(B), the entire period during which the application was pending before the Office (except for periods excluded under 35 U.S.C. 154(b)(1)(B)(i)-(iii)), and not just the period beginning three years after national stage commenced, is the relevant period under 35 U.S.C. 154(b)(1)(B) in determining whether periods of delay "overlap" under 35 U.S.C. 154(b)(2)(A).

This interpretation is consistent with the statute. Taken together the statute and rule provide that to the extent that periods of delay attributable to grounds specified in 35 U.S.C. 154(b)(1) and in corresponding §1.702 overlap, the period of adjustment granted shall not exceed the actual number of days the issuance of the patent was delayed.

In this instance, the relevant period under 35 U.S.C. 154(b)(1)(B) in determining whether periods of delay "overlap" under 35 U.S.C. 154(b)(2)(A) is the period during which the application was pending before the Office beginning on the date that national stage commenced under 35 U.S.C. 371(b) or (f) in an international application, May 26, 2005, and ending on the date that the patent issued, April 21, 2009.

Pursuant to 35 U.S.C. 154(b)(1)(A) and 37 CFR 1.702(a)(1), 427 days of examination delay accrued prior to issuance of patent. Pursuant to 35 U.S.C. 154(b)(1)(B) and 37 CFR 1.702(b), the application was pending three years and 330 days prior to the issuance of the patent on April 14, 2009.

The 330 days of delay in issuance of the patent under 37 CFR 1.702(b) overlap with the 427 days of patent term adjustment under 37 CFR 1.702(a)(1). Entry of both the 330 days and the 427 days is neither permitted nor warranted given that 427 days is the actual number of days issuance of the patent was delayed.

Accordingly, at issuance, having considered the 330 days of Office delay under the three-year pendency provision in conjunction with the 427 days of examination delay, reduced 23 days for applicant delay, the Office properly entered 404 days of patent term adjustment.

In view thereof, no adjustment to the patent term will be made.

Receipt is hereby acknowledged to he required $200.00 patent term adjustment application fee. 37 CFR 1.18(e).

Telephone inquiries specific to this matter should be directed to the undersigned at (571) 272-3205.

Alesia M. Brown
Petitions Attorney
Office of Petitions

UNITED STATES PATENT AND TRADEMARK OFFICE

COMMISSIONER FOR PATENTS
UNITED STATES PATENT AND TRADEMARK OFFICE
P.O. BOX 1450
ALEXANDRIA, VA 22313-1450
www.uspto.gov

MAILED

JUN 15 2010

OFFICE OF PETITIONS

FOLEY AND LARDNER LLP
SUITE 500
3000 K STREET NW
WASHINGTON DC 20007

In re Patent No. 7,521,451
Issued: April 21, 2009
Application No. 10/534,414
Filed: May 11, 2005
Dkt. No.: 074129-0521

: DECISION ON APPLICATION FOR
: PATENT TERM ADJUSTMENT and
: NOTICE OF INTENT TO ISSUE
: CERTIFICATE OF CORRECTION
:

This is a decision on the petition filed on January 15, 2010, which is being treated as a petition under 37 CFR 1.181 requesting that the patent term adjustment indicated on the above-identified patent be corrected to indicate that the term of the above-identified patent is extended or adjusted by 764 days.

The petition was filed within two months of a decision by the Office mailed on December 15, 2009 dismissing applicant request for reconsideration of PTA under 37 CFR 1.705(d).

The application for patent term adjustment is **GRANTED TO THE EXTENT INDICATED HEREIN**.

As previously advised, the period of adjustment pursuant to 37 CFR 1.702(a)(1) is 427 days, not 442 days.

As previously acknowledged, the period of applicant delay is 23 days.

The period of "B" delay is 330 days, not 345 days, as argued by patentees. In an international application, the period of "B" delay is based on the failure of the Office to issue a patent within three years after the national stage commenced under 35 U.S.C. 371(b) or (f). See, 1.702(b). The priority date of this application is November 26, 2002. The requirements for early commencement were not met; accordingly, the national stage commenced in this application on May 26, 2005. Thus, "B" delay is 330 days, counting the number of days beginning on May 27, 2008 and ending on April 21, 2009, the date of issuance. See, 1.703(b).

In view thereof, the patent is entitled to an overall adjustment of 734 days ("A" delay of 427 days + 330 days of "B" delay – 23 days of applicant delay).

The Office will *sua sponte* issue a certificate of correction. Pursuant to 37 CFR 1.322, the Office will not issue a certificate of correction without first providing assignee or patentee an opportunity to be heard. Accordingly, patentees are given **one (1) month or thirty (30) days,** whichever is longer, from the mail date of this decision to respond. No extensions of time will be granted under § 1.136. See 37 CFR 1.323(a)(4).

The application is being forwarded to the Certificate of Corrections Branch for issuance of a certificate of correction. The Office will issue a certificate of correction indicating that the term of the above-identified patent is extended or adjusted by 734 days.

The Office acknowledges the previous submission of the $200.00 fee set forth in 37 CFR 1.18(e). No additional fees are required.

Telephone inquiries specific to this matter should be directed to the undersigned at (571) 272-3205.

/ALESIA M. BROWN/

Alesia M. Brown
Petitions Attorney
Office of Petitions

Enclosure: Copy of DRAFT Certificate of Correction

UNITED STATES PATENT AND TRADEMARK OFFICE

CERTIFICATE OF CORRECTION

PATENT : 7,521,451 B2

DATED : **April 21, 2009** **DRAFT**

INVENTOR(S) : Toyooka, et al.

It is certified that error appears in the above-identified patent and that said Letters Patent is hereby corrected as shown below:

On the cover page,

[*] Notice: Subject to any disclaimer, the term of this patent is extended or adjusted under 35 USC 154(b) by 404 days

Delete the phrase "by 404 days" and insert – by 734 days--

UNITED STATES PATENT AND TRADEMARK OFFICE

UNITED STATES DEPARTMENT OF COMMERCE
United States Patent and Trademark Office
Address: COMMISSIONER FOR PATENTS
P.O. Box 1450
Alexandria, Virginia 22313-1450
www.uspto.gov

CROCKETT & CROCKETT, P.C.
26020 ACERO
SUITE 200
MISSION VIEJO, CA 92691

Mail Date: 04/21/2010

Applicant	: Zhongkang Lu	: DECISION ON REQUEST FOR
Patent Number	: 7590287	: RECALCULATION of PATENT
Issue Date	: 09/15/2009	: TERM ADJUSTMENT IN VIEW
Appliction No	: 10/534,415	: OF WYETH AND NOTICE OF INTENT TO
Filed	: 03/09/2006	: ISSUE CERTIFICATE OF CORRECTION
		:

The Request for Recalculation is **GRANTED** to the extent indicated.

The patent term adjustment has been determined to be **671** days. The USPTO will *sua sponte* issue a certificate of correction reflecting the amount of PTA days determined by the recalculation.

Prior to the issuance of the certificate of correction, the USPTO will afford patentee an opportunity to be heard and request reconsideration. Accordingly, patentee has **one month or thirty (30) days**, whichever is longer, to file a request for reconsideration of this patent term adjustment calculation. See 35 U.S.C. 154(b)(3)(B)(ii) and 37 CFR 1.322(a)(4). No extensions of time will be granted under 37 CFR 1.136.

Patentee should use document code PET.OP if electronically filing a request for reconsideration of this patent term adjustment calculation. The patentee must also include the information required by 37 CFR 1.705(b)(2) and the fee required by 37 CFR 1.18(e). If patentee does not file a timely request for reconsideration of this patent term adjustment calculation including the information required by 37 CFR 1.705(b)(2) and the fee required by 37 CFR 1.18(e), the USPTO will issue a certificate of correction reflecting the PTA determination noted above.

Patentee should be aware that in order to preserve the right to review in the United States District Court for the District of Columbia of the USPTO patent term adjustment determination, patentee must ensure that he or she also take the steps required under 35 U.S.C. 154(b)(4)(A) in a timely manner. Nothing in the request for recalculation should be construed as providing an alternative time frame for commencing a civil action under 35 U.S.C. 154(b)(4)(A).

Any questions concerning this decision should be directed to the Office of Patent Legal Administration at 571-272-7702.

UNITED STATES PATENT AND TRADEMARK OFFICE

Commissioner for Patents
United States Patent and Trademark Office
P.O. Box 1450
Alexandria, VA 22313-1450
www.uspto.gov

25 OCT 2006

HOGAN & HARTSON L.L.P.
1999 AVENUE OF THE STARS
SUITE 1400
LOS ANGELES CA 90067

In re Application of	:	
NAKAI, Tomomichi, et al.	:	
Application No.: 10/534,420	:	DECISION ON
PCT No.: PCT/JP03/14256	:	
Int. Filing Date: 10 November 2003	:	PETITION
Priority Date: 08 November 2002	:	
Attorney Docket No.: 81784.0330	:	UNDER 37 CFR 1.181
For: IMAGE SIGNAL PROCESSING CIRCUIT AND IMAGING UNIT USING THE SAME	:	

This decision is in response to applicant's "Petition to Reset Time Period For Reply Due To Late Receipt of Office Action," filed with the United States Patent and Trademark Office on 09 August 2006. It has been treated as a petition under 37 CFR 1.181.

BACKGROUND

On 10 November 2003, applicant filed international application PCT/JP03/14256, claiming a priority date of 08 November 2002. A copy of the international application was communicated to the United States Patent and Trademark Office (USPTO) from the International Bureau on 21 May 2004. The deadline for entry into the national stage in the United States was 08 May 2005.

On 05 May 2005, applicant filed a submission for entry into the national stage in the United States which was accompanied by, *inter alia*, the U.S. Basic National Fee. The transmittal letter indicated that correspondence should be directed to Customer No. 26021.

On 09 January 2006, the Office mailed a Notification of Missing Requirements (Form PCT/DO/EO/905) to Customer No. 26061.

On 09 August 2006, applicant submitted the instant petition to reset the time period for reply.

DISCUSSION

A review of the petition indicates that the Notification of Missing Requirements mailed on 09 January 2006 was never received by applicant. A faxed copy of the Notification is being acted upon. As the Notification of Missing Requirements was mailed to an incorrect address, it is vacated.

CONCLUSION

For the reasons set forth above, the petition under 37 CFR 1.181 is **GRANTED**.

The Notification of Missing Requirements (Form PCT/DO/EO/905) mailed on 09 January 2006 is **VACATED**.

This application is being forwarded to the National Stage Processing Division of the Office of the PCT Operations for continued processing. The application has a date under 35 U.S.C. §371(c)(1), (c)(2) and (c)(4) of 09 August 2006.

Erin P. Thomson

Erin P. Thomson
Attorney Advisor
PCT Legal Administration

Telephone: 571-272-3292
Facsimile: 571-273-0459

UNITED STATES PATENT AND TRADEMARK OFFICE

Commissioner for Patents
United States Patent and Trademark Office
P.O. Box 1450
Alexandria, VA 22313-1450
www.uspto.gov

OCT 22 2007

CLARK & ELBING LLP
101 FEDERAL STREET
BOSTON MA 02110

In re Application of	:
Teumer et al.	:
Serial No.: 10/534,428	: PETITION DECISION
Filed: May 10, 2005	:
Attorney Docket No.: 50393/004001	:

This is in response to the petition under 37 CFR § 1.181, filed September 20, 2007, requesting that the finality of the Office action of March 12, 2007 be withdrawn.

BACKGROUND

The examiner mailed a non-final Office action on August 22, 2006, setting a three month shortened statutory period for reply. In this action, claims 16 and 29-31 were rejected under 35 U.S.C. 112, second paragraph as being indefinite. Claims 1, 7-10, 13, 17, and 19 were rejected under 35 U.S.C. 102 (b) as being anticipated by WO 99/01034. Claims 1-15, 17, 19-21, 29, and 32 were rejected under 35 U.S.C. 103 (a) as being unpatentable over WO 99/01034 and WO 00/69449 in view of Keller et al (Frontiers in Bioscience, 1996), Hibberts et al (Journal of Endocrinolgy, 1998) and Van Nispen (US 5,002,881, 1991). Claims 1, 18, and 33 were also rejected under 35 U.S.C. 103 (a) as unpatentable over WO 99/01034. Claims 34-50 were withdrawn as being drawn to a non-elected invention.

In response to the non-final Office action, applicants amended claims 1, 9, 16, 30, and 31 on January 25, 2007. Applicants also argued the rejections set forth in the action and canceled claims 2-6.

The examiner mailed a final Office action on April 20, 2007, setting a three month shortened statutory period for reply. In this Office action, claims 1, 7-21, and 29-33 were rejected under 35 U.S.C. 103 (a) as being unpatentable over WO 99/01034 and WO 00/69449 in view of Keller et al (Frontiers in Bioscience, 1996), Hibberts et al (Journal of Endocrinology, 1998) and Van Nispen (US 5,002,881, 1991).

In response thereto, applicants filed this petition on September 20, 2007, requesting that the finality of the Office action of April 20, 2007 be withdrawn.

DISCUSSION

Applicants argue that on "August 22, 2006, the Office issued a non- final action rejecting claims 16 and 29-31 for indefiniteness, claims 1, 7-10, 13, 17, and 19 for anticipation by WO 99/01034, claims 1-15, 17, 19-21, 29, and 32 for obviousness over WO 99/01034, WO 0069499, Keller et al. (Frontiers in Bioscience, 1996; hereinafter '"Keller"), Hibberts et al. (Journal of Endocrinology, 1998; hereinafter "Hibberts"), and Van Nispen (U.S. Patent No. 5,002,881; hereinafter "Van Nispen'), and claims 1, 18, and 33 for obviousness over WO 99/01034." Applicants also point out that in their reply of January 22, 2007, applicants narrowed independent claim 1 to recite that the culture medium is conditioned by prostate epithelial cells. Applicants further point out that their amendments and arguments overcame the indefiniteness and anticipation rejections but the Office action finally rejected claims 1, 7-21, and 29-33 for obviousness over the combination of WO 99/01034, WO 0069499, Keller, Hibberts, and Van Nispen for the reasons given in the prior non-final Office Action. Applicants finally point out that the Office action stated that the reason for making the Office Action final was that "Applicant's amendment necessitated the new ground(s) of rejection presented in the Office action."

Applicants' arguments are not persuasive. The first Office action of August 22, 2006 rejected the claims under 37 CFR 103(a) over WO 99/01034 and WO 00/69449 in view of Keller et al (Frontiers in Bioscience, 1996), Hibberts et al (Journal of Endocrinolgy, 1998) and Van Nispen (US 5,002,881, 1991) as did the rejection in the final Office action. To the extent that the final rejection was necessitated by amendment, only the claim numbers rejected were modified and this only due to claim amendments and cancellation of claims. The same grounds were set forth in the final Office action along with arguments as to why the rejection should be maintained. It is quite apparent that the examiner has merely maintained the rejection of record and that no actual "new" grounds were set forth. Therefore, the Office action of April 20, 2007 was properly made final.

DECISION

The petition is **DENIED**. Any new or renewed petition must be filed within TWO MONTHS of the mail date of this decision.

Should there be any questions about this decision please contact Marianne C. Seidel, by letter addressed to Director, TC 1600, at the address listed above, or by telephone at 571-272-0584 or by facsimile sent to the general Office facsimile number, 703-872-9306.

Bruce Kisliuk
Director, Technology Center 1600

UNITED STATES PATENT AND TRADEMARK OFFICE

COMMISSIONER FOR PATENTS
UNITED STATES PATENT AND TRADEMARK OFFICE
P.O. BOX 1450
ALEXANDRIA, VA 22313-1450
www.uspto.gov

THE WEBB LAW FIRM, P.C.
700 KOPPERS BUILDING
436 SEVENTH AVENUE
PITTSBURGH PA 15219

MAILED

MAR 2 9 2010

OFFICE OF PETITIONS

In re Patent No. 7,648,585 :
Issue Date: January 19, 2010 :
Application No. 10/534,449 :
Filed: November 22, 2205 :
Attorney Docket No. 0470-051457 :

NOTICE

This is a notice regarding your request for acceptance of a fee deficiency submission under 37 CFR 1.28 filed January 8, 2010. On September 1, 1998, the Court of Appeals for the Federal Circuit held that 37 CFR 1.28(c) is the sole provision governing the time for correction of the erroneous payment of the issue fee as a small entity. **See DH Technology v. Synergystex International, Inc. 154 F.3d 1333, 47 USPQ2d 1865 (Fed. Cir. Sept. 1, 1998).**

The Office no longer investigates or rejects original or reissue applications under 37 CFR 1.56. **1098 Off. Gaz. Pat. Office 502 (January 3, 1989)**. Therefore, nothing in this Notice is intended to imply that an investigation was done.

Your fee deficiency submission under 37 CFR 1.28 is hereby accepted. The petition is **GRANTED**.

This application is no longer entitled to small entity status. Accordingly, all future fees paid in this application must be paid at the large entity rate.

This file is being forwarded to Files Repository.

Telephone inquiries related to this decision should be directed to the Kimberly Inabinet at (571) 272-4618.

Carl Friedman
Petitions Examiner
Office of Petitions

UNITED STATES PATENT AND TRADEMARK OFFICE

UNITED STATES DEPARTMENT OF COMMERCE
United States Patent and Trademark Office
Address: COMMISSIONER FOR PATENTS
P.O. Box 1450
Alexandria, Virginia 22313-1450
www.uspto.gov

THE WEBB LAW FIRM, P.C.
700 KOPPERS BUILDING
436 SEVENTH AVENUE
PITTSBURGH, PA 15219

Mail Date: 05/07/2010

Applicant	: Tjitze Meter	: DECISION ON REQUEST FOR
Patent Number	: 7648585	: RECALCULATION of PATENT
Issue Date	: 01/19/2010	: TERM ADJUSTMENT IN VIEW
Application No	: 10/534,449	: OF WYETH AND NOTICE OF INTENT TO
Filed	: 11/22/2005	: ISSUE CERTIFICATE OF CORRECTION
		:

The Request for Recalculation is **GRANTED** to the extent indicated.

The patent term adjustment has been determined to be **948** days. The USPTO will *sua sponte* issue a certificate of correction reflecting the amount of PTA days determined by the recalculation.

Prior to the issuance of the certificate of correction, the USPTO will afford patentee an opportunity to be heard and request reconsideration. Accordingly, patentee has **one month or thirty (30) days**, whichever is longer, to file a request for reconsideration of this patent term adjustment calculation. See 35 U.S.C. 154(b)(3)(B)(ii) and 37 CFR 1.322(a)(4). No extensions of time will be granted under 37 CFR 1.136.

Patentee should use document code PET.OP if electronically filing a request for reconsideration of this patent term adjustment calculation. The patentee must also include the information required by 37 CFR 1.705(b)(2) and the fee required by 37 CFR 1.18(e). If patentee does not file a timely request for reconsideration of this patent term adjustment calculation including the information required by 37 CFR 1.705(b)(2) and the fee required by 37 CFR 1.18(e), the USPTO will issue a certificate of correction reflecting the PTA determination noted above.

Patentee should be aware that in order to preserve the right to review in the United States District Court for the District of Columbia of the USPTO patent term adjustment determination, patentee must ensure that he or she also take the steps required under 35 U.S.C. 154(b)(4)(A) in a timely manner. Nothing in the request for recalculation should be construed as providing an alternative time frame for commencing a civil action under 35 U.S.C. 154(b)(4)(A).

Any questions concerning this decision should be directed to the Office of Patent Legal Administration at 571-272-7702.

UNITED STATES PATENT AND TRADEMARK OFFICE

UNITED STATES DEPARTMENT OF COMMERCE
United States Patent and Trademark Office
Address: COMMISSIONER FOR PATENTS
P.O. Box 1450
Alexandria, Virginia 22313-1450
www.uspto.gov

ALSTON & BIRD LLP
BANK OF AMERICA PLAZA
101 SOUTH TRYON STREET, SUITE 4000
CHARLOTTE, NC 28280-4000

Mail Date: 04/21/2010

Applicant	: Eduard Herda	: DECISION ON REQUEST FOR
Patent Number	: 7637730	: RECALCULATION of PATENT
Issue Date	: 12/29/2009	: TERM ADJUSTMENT IN VIEW
Appliction No	: 10/534,451	: OF WYETH AND NOTICE OF INTENT TO
Filed	: 11/10/2005	: ISSUE CERTIFICATE OF CORRECTION
		:

The Request for Recalculation is **GRANTED** to the extent indicated.

The patent term adjustment has been determined to be **1040** days. The USPTO will *sua sponte* issue a certificate of correction reflecting the amount of PTA days determined by the recalculation.

Prior to the issuance of the certificate of correction, the USPTO will afford patentee an opportunity to be heard and request reconsideration. Accordingly, patentee has **one month or thirty (30) days**, whichever is longer, to file a request for reconsideration of this patent term adjustment calculation. See 35 U.S.C. 154(b)(3)(B)(ii) and 37 CFR 1.322(a)(4). No extensions of time will be granted under 37 CFR 1.136.

Patentee should use document code PET.OP if electronically filing a request for reconsideration of this patent term adjustment calculation. The patentee must also include the information required by 37 CFR 1.705(b)(2) and the fee required by 37 CFR 1.18(e). If patentee does not file a timely request for reconsideration of this patent term adjustment calculation including the information required by 37 CFR 1.705(b)(2) and the fee required by 37 CFR 1.18(e), the USPTO will issue a certificate of correction reflecting the PTA determination noted above.

Patentee should be aware that in order to preserve the right to review in the United States District Court for the District of Columbia of the USPTO patent term adjustment determination, patentee must ensure that he or she also take the steps required under 35 U.S.C. 154(b)(4)(A) in a timely manner. Nothing in the request for recalculation should be construed as providing an alternative time frame for commencing a civil action under 35 U.S.C. 154(b)(4)(A).

Any questions concerning this decision should be directed to the Office of Patent Legal Administration at 571-272-7702.

UNITED STATES PATENT AND TRADEMARK OFFICE

UNITED STATES DEPARTMENT OF COMMERCE
United States Patent and Trademark Office
Address: COMMISSIONER FOR PATENTS
P.O. Box 1450
Alexandria, Virginia 22313-1450
www.uspto.gov

APPLICATION NO.	FILING DATE	FIRST NAMED INVENTOR	ATTORNEY DOCKET NO.	CONFIRMATION NO.
10/534,454	12/13/2005	Friedrich Kastner	2005_0782A	4789

513 7590 03/03/2010
WENDEROTH, LIND & PONACK, L.L.P.
1030 15th Street, N.W.,
Suite 400 East
Washington, DC 20005-1503

EXAMINER
KHATRI, PRASHANT J

ART UNIT	PAPER NUMBER
1794	

NOTIFICATION DATE	DELIVERY MODE
03/03/2010	ELECTRONIC

Please find below and/or attached an Office communication concerning this application or proceeding.

The time period for reply, if any, is set in the attached communication.

Notice of the Office communication was sent electronically on above-indicated "Notification Date" to the following e-mail address(es):

ddalecki@wenderoth.com
eoa@wenderoth.com

UNITED STATES PATENT AND TRADEMARK OFFICE

Commissioner for Patents
United States Patent and Trademark Office
P.O. Box 1450
Alexandria, VA 22313-1450
www.uspto.gov

wk

Mailed: MAR 0 3 2010

In re application of Kastner et al. Serial No. 10/534,454 Filed: December 13, 2005 For: Film For Packaging Purposes, Having A Partially Applied Security Feature	:	DECISION ON PETITION

This is a decision on the PETITION FILED UNDER 37 CFR 1.181 on January 27, 2010 to withdraw the final status of the office action dated January 14, 2010.

On January 14, 2010, a Final Office Action was issued. Claim 20 was rejected under 35 USC 112(2). This rejection was not necessitated by Applicants' previous claim amendments.

DECISION

The petition for withdrawal of finality is **GRANTED.**

The response period will continue to run from the mail date of the office action of January 14, 2010.

/Jacqueline Stone/

Jacqueline M. Stone, Director
Technology Center 1700
Chemical and Materials Engineering

Michael R. Davis
WENDEROTH, LIND & PONACK, L.L.P.
1030 15th Street, N.W.,
Suite 400 East
Washington DC 20005-1503

28 APR 2006

#11

UNITED STATES PATENT AND TRADEMARK OFFICE

Commissioner for Patents
United States Patent and Trademark Office
P.O. Box 1450
Alexandria, VA 22313-1450
www.uspto.gov

Benoit Castel
Young & Thompson
745 South 23rd Street
Arlington, VA 22202

In re Application of	:	
GRIFFNER	:	DECISION ON RENEWED
U.S. Application No.: 10/534,467	:	
PCT No.: PCT/AT03/00314	:	PETITION UNDER
Int. Filing Date: 16 October 2003	:	
Priority Date: 11 November 2002	:	37 CFR 1.181
Attorney Docket No.:4301-1138	:	
For: BUILDING MADE OF WALL HALLOW	:	
HEATED ELEMENTS	:	

This decision is in response to applicant's "Renewed Request For Reconsideration Under 37 CFR 1.181" filed 23 March 2006 in the United States Patent and Trademark Office (USPTO).

BACKGROUND

On 13 March 2006, applicant was mailed a communication dismissing applicant's arguments in response to a "Notification of Defective Response" (Form PCT/DO/EO/916) mailed 23 January 2006. Applicant was informed that the response period identified in the "Notification of Missing Requirements" (Form PCT/DO/EO/905) mailed 24 October 2005 remained in effect.

On 23 March 2006, applicant filed the present renewed petition under 37 CFR 1.181.

DISCUSSION

None of the facts in the present action are in dispute. The application is a U.S. National stage entry of international application PCT/AT03/00314. As detailed in the communication mailed 13 March 2006, on 22 December 2005 applicant filed a combined declaration and power of attorney executed by the sole inventor, Ari Griffner. The international application number on the filed declaration was identified as PCT/AT2003/000**315**.

Applicant contends that, while the declaration identifies the wrong international application, the declaration complies with 37 CFR 1.63. Applicant cites an Official Gazette Notice (O.G. notice) of 15 August 1995 which was subsequently incorporated into Section 602 of the Manual of Patent Examining Procedure (MPEP). Applicant's contention is unfounded and the reliance on Section 602 of the MPEP is misplaced.

Section 602 VI Identification of Application states:

37 CFR 1.63 requires that an oath or declaration identify the specification to which it is directed. The declaration form suggested by the Office includes spaces for filling in the names of the inventors, title of the invention, application number, filing date, and foreign priority application information. While this information should be provided, it is not essential that **all of these spaces be completed** in order to adequately identify the specification in compliance with 37 CFR 1.63(b). (boldness added).

It is clear from the language above that the alternatives which follow (those relied upon by applicant in the present action) are avenues of relief for instances in which all of the spaces (names of the inventors, title of the invention, application number, filing date, and foreign priority application information) are not filled out. In the present case, all of this information was in fact provided on the declaration filed 22 December 2005. Thus, Section 602 does not apply.

Further, the information provided was in conflict with itself. Specifically, the international application number did not match the inventor name, title, filing date and foreign priority information. Thus, as stated in the Form PCT/DO/EO/916 mailed 23 January 2006, the filed declaration did not comply with 37 CFR 1.497(a)-(b).

Applicant asserts that a "Senior Legal Advisor of the Office of Petitions" informed counsel that a declaration such as the one filed by applicant must be accepted. The offered information has no bearing on the case at hand. Decisions rendered by the Office of PCT Legal Administration are made based on the record of the case. Applicant is reminded that 37 CFR 1.2 states that the action of the USPTO will be based exclusively on the written record in the office and that no attention will be paid to any alleged oral promise, stipulation, or understanding in relation to which there is disagreement or doubt. (See also Farnum v. Manbeck (DC DC) 21 USPQ2d 1691 (1991))

CONCLUSION

Applicant's renewed petition under 37 CFR 1.181 is **DENIED**.

Applicant is again advised that a compliant oath or declaration of the inventor in response to the Form PCT/DO/EO/905 mailed 24 October 2005 has not been filed and the extendable time period for responding continued to run. Failure to timely provide a compliant oath or declaration of the inventor will result in the application being abandoned as to the National stage in the United States.

Charles Pearson
Director
Office of PCT Legal Administration

13 JUN 2006

#13

UNITED STATES PATENT AND TRADEMARK OFFICE

Commissioner for Patents
United States Patent and Trademark Office
P.O. Box 1450
Alexandria, VA 22313-1450
www.uspto.gov

Benoit Castel
Young & Thompson
745 South 23rd Street
Arlington, VA 22202

In re Application of	:	
GRIFFNER	:	DECISION ON
U.S. Application No.: 10/534,467	:	
PCT No.: PCT/AT03/00314	:	PETITION UNDER
Int. Filing Date: 16 October 2003	:	
Priority Date: 11 November 2002	:	37 CFR 1.181
Attorney Docket No.:4301-1138	:	
For: BUILDING MADE OF WALL HALLOW	:	
HEATED ELEMENTS	:	

This decision is in response to applicant's communication filed 08 June 2006 in the United States Patent and Trademark Office (USPTO). The communication is being treated as a petition under 37 CFR 1.181. No petition fee is required.

BACKGROUND

On 28 April 2006, applicant was mailed a decision denying applicant's renewed petition under 37 CFR 1.181 to accept the declaration filed 22 December 2005.

On 08 June 2006, applicant filed the present communication indicating that a newly executed declaration of the inventor had been filed on 19 April 2006.

DISCUSSION

Section 503 of the Manual of Patent Examining Procedure under the heading "RETURN POSTCARD" states, in part:

> A postcard receipt which itemizes and properly identifies the items which are being filed serves as *prima facie* evidence of receipt in the USPTO of all the items listed thereon on the date stamped thereon by the USPTO.

As stated above, the best evidence of what was actually received by the Office on a particular date is a copy of returned date stamped postcard receipt that was filed with papers in question and contains a specific itemization of all items being submitted. In the present instance, applicant has provided a postcard receipt for 19 April 2006 listing the following:

1. Transmittal Letter (2nd Submission)

2. Executed Declaration

The postcard shows a USPTO date stamp, "OIPE IAP34 Patent & Trademark Office APR 19 2006." The evidence is sufficient to establish that the newly executed combined declaration and power of attorney for this application was received in the USPTO on 19 April 2006. In order to consider the 19 April 2006 filing a timely response to the "NOTIFICATION OF MISSING REQUIREMENTS" (Form PCT/DO/EO/905) mailed 24 October 2005 a four-month extension of time fee will be charged to deposit account number 25-0120 (as authorized in the transmittal letter filed 11 May 2005).

CONCLUSION

Applicant's petition under 37 CFR 1.181 is **GRANTED**.

The application will be given an international filing date of 16 October 2003 under 35 U.S.C. 363 and a date of **19 April 2006** under 35 U.S.C. 371(c)(1), (c)(2) and (c)(4).

This application is being returned to the United States Designated/Elected Office (US/DO/EO) for further processing in accordance with this decision, namely the issuance of a "Notification of Acceptance of Application Under 35 U.S.C. 371 and 37 CFR 1.494 or 1.495" (Form PCT/DO/EO/903) indicating the 371 date as detailed above.

Derek A. Putonen
Attorney Advisor
Office of PCT Legal Administration
Tel: (571) 272-3294
Fax: (571) 273-0459

BEST AVAILABLE COPY

UNITED STATES PATENT AND TRADEMARK OFFICE

Commissioner for Patents
United States Patent and Trademark Office
P.O. Box 1450
Alexandria, VA 22313-1450
www.uspto.gov

FINNEGAN, HENDERSON, FARABOW,
GARRETT & DUNNER LLP
901 NEW YORK AVENUE, NW
WASHINGTON DC 20001-4413

COPY MAILED

DEC 15 2009

OFFICE OF PETITIONS

In re Patent No. 7,557,212	:	DECISION ON REQUEST FOR
Puig Duran et al.	:	RECONSIDERATION OF
Issue Date: July 7, 2009	:	PATENT TERM ADJUSTMENT
Application No. 10/534,487	:	AND NOTICE OF INTENT TO ISSUE
Filed: January 9, 2006	:	CERTIFICATE OF CORRECTION
Docket No. 09605.0010	:	

This is in response to the APPLICATION FOR PATENT TERM ADJUSTMENT POST-GRANT, filed August 24, 2009, which is properly treated under 37 CFR 1.705(d). Patentees request that the determination of patent term adjustment for the above-identified patent be corrected from five (5) days to twenty-three (23) days.

The request for reconsideration of the patent term adjustment indicated in the patent is **GRANTED** to the extent indicated herein.

Patentees are given **THIRTY (30) DAYS or ONE (1) MONTH, whichever is longer**, from the mail date of this decision to respond. No extensions of time will be granted under 37 CFR 1.136.

The patent term adjustment indicated on the patent is to be corrected by issuance of a certificate of correction showing a revised Patent Term Adjustment of **186 days**.

On July 7, 2009, the above-identified application matured into U.S. Patent No. 7,557,212. The patent issued with a revised patent term adjustment of 5 days. The present request for reconsideration of patent term adjustment was timely filed on August 24, 2009, within two months of the issue date of the patent. See 37 CFR 1.705(d).

Patentees request recalculation of the patent term adjustment based on the decision in Wyeth v. Dudas, 580 F. Supp. 2d 138, 88 U.S.P.Q. 2d 1538 (D.D.C. 2008). Patentees aver that the correct number of days of Patent Term Adjustment is 23 days under the court's interpretation of the overlap provision as set forth in Wyeth v. Dudas, 580 F. Supp. 2d 138, 88 U.S.P.Q. 2d 1538 (D.D.C. 2008). Patentees assert that pursuant to Wyeth, a PTO delay under 35 U.S.C. 154(b)(1)(A) overlaps with a delay under 35 U.S.C. 154(b)(1)(B) only if the delays "occur on the same day." Patentees maintain that the total non-overlapping PTO delay under 35 U.S.C. 154(b)(1)(A) (78 days) and 35 U.S.C. 154(b)(1)(B) (18 days) is 96 days as these periods do not occur on the same day. Further, given the applicant delay of 73 day, patentees assert entitlement to 23 (96- 73) days of patent term adjustment.

At the outset, a review of the record indicates that neither the Office nor patentees used the 35 U.S.C. 371(b) national stage commencement date of May 12, 2005, in calculating the period of adjustment under 37 CFR 1.703(b). As stated in 37 CFR 1.703(b), the period of adjustment under § 1.702(b) is the number of days in the period beginning on the day after the date that is three years after the date on which the application was filed under 35 U.S.C. 111(a) or the national stage commenced under 35 U.S.C. 371(b) in an international application and ending on the day before the filing of the request for continued examination (not including any other periods excluded under 35 U.S.C. 154(b)(1)(B)(i)-(iii)).

Pursuant to 37 CFR 1.703(b), the period of adjustment under 37 CFR 1.702(b)[1] should be 259 days, counting the number of days beginning on the day after the date that is three years after the date on which the national stage commenced under 35 U.S.C. 371(b), May 13,

---

[1] Pursuant to 35 U.S.C. 154(b)(1)(B), 37 CFR 1.702(b) provides, in pertinent part, that:

> Failure to issue a patent within three years of the actual filing date of the application. Subject to the provisions of 35 U.S.C. 154(b) and this subpart, the term of an original patent shall be adjusted if the issuance of the patent was delayed due to the failure of the Office to issue a patent within three years after the date on which the application was filed under 35 U.S.C. 111(a) or the national stage commenced under 35 U.S.C. 371(b) or (f) in an international application[.]

2008, and ending on January 26, 2009, the day before the request for continued examination was filed.

As to patentees' interpretation of the period of overlap, the Office finds it inconsistent with the Office's interpretation of the overlap provision, 35 U.S.C. 154(b)(2)(A). 35 U.S.C. 154(b)(2)(A) limits the adjustment of patent term, as follows:

> to the extent that the periods of delay attributable to grounds specified in paragraph (1) overlap, the period of any adjustment granted under this subsection shall not exceed the actual number of days the issuance of the patent was delayed.

As explained in *Explanation of 37 CFR 1.703(f)*[2] *and of the United States Patent and Trademark Office Interpretation of 35 U.S.C. 154(b)(2)(A)*, 69 Fed. Reg. 34283 (June 21, 2004), the Office interprets 35 U.S.C. 154(b)(2)(A) as permitting either patent term adjustment under 35 U.S.C. 154(b)(1)(A)(i)-(iv), or patent term adjustment under 35 U.S.C. 154(b)(1)(B), but not as permitting patent term adjustment under both 35 U.S.C. 154(b)(1)(A)(i)-(iv) and 154(b)(1)(B). Accordingly, the Office implements the overlap provision as follows:

> If an application is entitled to an adjustment under 35 U.S.C. 154(b)(1)(B), the entire period during which the application was pending (except for periods excluded under 35 U.S.C. 154(b)(1)(B)(i)-(iii)), and not just the period beginning three years after the actual filing date of the application, is the period of delay under 35 U.S.C. 154(b)(1)(B) in determining whether periods of delay overlap under 35 U.S.C. 154(b)(2)(A). Thus, any days of delay for Office issuance of the patent more than 3 years after the filing date of the application, which overlap with the days of patent term adjustment accorded prior to the issuance of the patent will not result in any additional patent term adjustment. See 35 U.S.C. 154(b)(1)(B), 35 U.S.C. 154(b)(2)(A), and 37 CFR § 1.703(f). See *Changes to Implement Patent Term Adjustment Under Twenty Year Term;*

---

[2] Likewise, 37 CFR 1.703(f) provides that:

> To the extent that periods of delay attributable to the grounds specified in § 1.702 overlap, the period of adjustment granted under this section shall not exceed the actual number of days the issuance of the patent was delayed.

Final Rule, 65 Fed. Reg. 56366 (Sept. 18, 2000). See also *Revision of Patent Term Extension and Patent Term Adjustment Provisions; Final Rule*, 69 Fed. Reg. 21704 (April 22, 2004), 1282 Off. Gaz. Pat. Office 100 (May 18, 2004). See also *Explanation of 37 CFR 1.703(f) and of the United States Patent and Trademark Office Interpretation of 35 U.S.C. 154(b)(2)(A)*, 69 Fed. Reg. 34283 (June 21, 2004).

Further, as stated in the *Explanation of 37 CFR 1.703(f) and of the United States Patent and Trademark Office Interpretation of 35 U.S.C. 154(b)(2)(A)*, the Office has consistently taken the position that if an application is entitled to an adjustment under the three-year pendency provision of 35 U.S.C. 154(b)(1)(B), the entire period during which the application was pending before the Office (except for periods excluded under 35 U.S.C. 154(b)(1)(B)(i)-(iii)), and not just the period beginning three years after the actual filing date of the application, is the relevant period under 35 U.S.C. 154(b)(1)(B) in determining whether periods of delay "overlap" under 35 U.S.C. 154(b)(2)(A).

This interpretation is consistent with the statute. Taken together the statute and rule provide that to the extent that periods of delay attributable to grounds specified in 35 U.S.C. 154(b)(1) and in corresponding 37 CFR 1.702 overlap, the period of adjustment granted shall not exceed the actual number of days the issuance of the patent was delayed.

In this instance, the relevant period under 35 U.S.C. 154(b)(1)(B) in determining whether periods of delay "overlap" under 35 U.S.C. 154(b)(2)(A) is the period during which the application was pending before the Office, May 12, 2005, the date of commencement under 35 USC 371(b), to January 26, 2009, the day before the request for continued examination was filed (not including any other periods excluded under 35 U.S.C. 154(b)(1)(B)(i)-(iii)).

Pursuant to 35 U.S.C. 154(b)(1)(A) and 37 CFR 1.702(a)(1) and (a)(2)[3], 78 days of patent term adjustment were accorded during the pendency of the application for Office delay prior to the issuance of the patent. Pursuant to 35 U.S.C. 154(b)(1)(B) and 37 CFR

[3] A restriction requirement was mailed on May 17, 2007, fourteen months and 69 days after the date of completion of all 35 U.S.C. 371 requirements on January 9, 2006. On April 8, 2008, a non-final Office action was mailed, 4 months and 9 days after a response was filed on November 30, 2007.

1.702(b)[4], 259 days of patent term adjustment accrued for Office issuance of the patent more than three years after the date the national stage commenced under 35 U.S.C. 371(b).

The 259 days of patent term adjustment under 37 CFR 1.702(b) overlap with the 78 days of patent term adjustment under 37 CFR 1.702(a)(1). Entry of both the 259 days and the 78 days is neither permitted nor warranted. 259 days is the actual number of days issuance of the patent was delayed. Accordingly, the additional period of adjustment of 181 days will be entered by the Office for failing to issue the patent within three years.

In view thereof, the patent term adjustment indicated on the patent should be 186 days.

The Office acknowledges the submission of the $200.00 fee set forth in 37 CFR 1.18(e). No additional fees are required.

The application file is being forwarded to the Certificates of Correction Branch for issuance of a certificate of correction in order to rectify this error. The Office will issue a certificate of correction indicating that the term of the above-identified patent is extended or adjusted by 186 days.

Telephone inquiries regarding this matter should be directed to Kenya A. McLaughlin, Petitions Attorney, at (571) 272-3222.

C. T. Donnell

Christina Tartera Donnell
Senior Petitions Attorney
Office of Petitions

Enclosure: Copy of DRAFT Certificate of Correction

[4] The application was pending three years and 259 days.

DRAFT COPY

UNITED STATES PATENT AND TRADEMARK OFFICE

CERTIFICATE OF CORRECTION

PATENT : 7, 557,212 B2

DATED : Jul. 7, 2009

INVENTOR(S) : Duran, et al.

It is certified that error appears in the above-identified patent and that said Letters Patent is hereby corrected as shown below:

On the cover page,

[*] Notice: Subject to any disclaimer, the term of this patent is extended or adjusted under 35 USC 154(b) by (5) days

Delete the phrase "by 5 days" and insert – by 186 days--

UNITED STATES PATENT AND TRADEMARK OFFICE

Commissioner for Patents
United States Patent and Trademark Office
P.O. Box 1450
Alexandria, VA 22313-1450
www.uspto.gov

FINNEGAN, HENDERSON, FARABOW,
GARRETT & DUNNER LLP
901 NEW YORK AVENUE, NW
WASHINGTON DC 20001-4413

MAILED
APR 13 2010
OFFICE OF PETITIONS

In re Patent No. 7,557,212	: DECISION ON REQUEST
Puig Duran, et al.	: FOR
Issue Date: July 7, 2009	: RECONSIDERATION OF
Application No. 10/534,487	: PATENT TERM ADJUSTMENT
Filed: January 9, 2006	: and
Atty Docket No. 09605.0010	: NOTICE OF INTENT TO ISSUE
	: CERTIFICATE OF CORRECTION

This is a decision on the petition filed on January 13, 2010, which is being treated as a petition under 37 CFR 1.705(d) requesting that the patent term adjustment indicated on the above-identified patent be corrected to indicate that the term of the above-identified patent is extended or adjusted by two hundred and sixty-four (264) days.

The petition to correct the patent term adjustment indicated on the above-identified patent to indicate that the term of the above-identified patent is extended or adjusted by two hundred and sixty-four (264) days is **GRANTED**.

Deposit account 06-0916 will be charged $200.00 for the fee set forth in 37 CFR 1.18(e). No additional fees are required.

The application is being forwarded to the Certificates of Corrections Branch for issuance of a certificate of correction. The Office will issue a certificate of correction indicating that the term of the above-identified patent is extended or adjusted by **two hundred and sixty-four (264) days**.

Telephone inquiries specific to this matter should be directed to the undersigned, at (571) 272-3222.

Kenya A. McLaughlin
Petitions Attorney
Office of Petitions

Enclosure: Copy of DRAFT Certificate of Correction

DRAFT COPY

UNITED STATES PATENT AND TRADEMARK OFFICE

CERTIFICATE OF CORRECTION

PATENT : 7,557,212 B2

DATED : Jul. 7, 2009

INVENTOR(S) : Duran et al.

It is certified that error appears in the above-identified patent and that said Letters Patent is hereby corrected as shown below:

On the cover page,

[*] Notice: Subject to any disclaimer, the term of this patent is extended or adjusted under 35 USC 154(b) by (186) days

Delete the phrase "by 186 days" and insert – by 264 days--

24 OCT 2005

UNITED STATES PATENT AND TRADEMARK OFFICE

24 OCT 2005

#a

Commissioner for Patents
United States Patent and Trademark Office
P.O. Box 1450
Alexandria, VA 22313-1450
www.uspto.gov

OBLON SPIVAK MCCLELLAND MAIER AND NEUSTADT PC
1940 DUKE ST
ALEXANDRIA, VA 22314

In re Application of: GERARD, David U.S. Application No.: 10/534,499 PCT No.: PCT/FR2003/002944 International Filing Date: 07 October 2003 Priority Date: 10 October 2002 Attorney's Docket No.:271325US3XPCT For: DEVICE FOR RECUPERATING WATER IN A POWER PRODUCTION UNIT COMPRISING A FUEL CELL	DECISION ON PETITION FOR REVIVAL OF ABANDONED APPLICATION UNDER 37 CFR 1.137(b)

The petition for revival under 37 CFR 1.137(b) filed 10 May 2005 in the above-captioned application is hereby **GRANTED** as follows:

Applicant's statement that "the entire delay in filing the required reply from the due date for the reply until the filing of a grantable petition under 37 CFR 1.137(b) was unintentional" satisfies the requirements of 37 CFR 1.137(b)(3).

Applicant has now submitted the basic national fee and the requirements of 37 CFR 1.137(b) have been satisfied. Therefore, the request to revive the application is granted as to the national stage in the United States.

This application is being returned to the National Stage Processing Division of the Office of PCT Operations for further processing in accordance with this decision, including the issuance of a Notification Of Missing Requirements (Form PCT/DO/EO/905) requiring submission of an oath or declaration in compliance with 37 CFR 1.497.

Richard M. Ross
PCT Petitions Attorney
Office Of PCT Legal Administration
Telephone: (571) 272-3296
Facsimile: (571) 273-0459

UNITED STATES PATENT AND TRADEMARK OFFICE

Commissioner for Patents
United States Patent and Trademark Office
P.O. Box 1450
Alexandria, VA 22313-1450
www.uspto.gov

Date Mailed : 2-21-07

Patent No.: 7,128,926 B1
Patent Issued : October 31, 2006
Inventor(s): Tomonori Arai
Title: NOVEL ESTER COMPOUND AND USE THEREOF
Docket No.: 272237US0PCT

Re: Request for Certificate of Correction

Consideration has been given your request for the issuance of a certificate of correction for the above-identified patent under the provisions of Rule 1.322or 1.323.

The alleged error on the title page, item [54] is the practice to exclude words such as "Improvements in", "New", "A", Novel", etc., from the printed patent.

In view of the foregoing, your request is hereby denied. However, further consideration will be given upon receipt of a request for reconsideration directed to Decisions & Certificates of Correction Branch.

Eva James
For Cecelia B. Newman
Certificate of Correction Branch
(703) 308-9390 ext. 124 or ext. 102

Daniel J. Pereira
1940 Duke Street
Alexandria, VA 22314

ej

UNITED STATES PATENT AND TRADEMARK OFFICE

Commissioner for Patents
United States Patent and Trademark Office
P.O. Box 1450
Alexandria, VA 22313-1450
www.uspto.gov

MARTIN D. MOYNIHAN d/b/a PRTSI, INC.
P.O. BOX 16446
ARLINGTON VA 22215

COPY MAILED

DEC 1 1 2009

OFFICE OF PETITIONS

In re Application of	:	
Pietrokovski et al.	:	
Application No. 10/534,544	:	DECISION ON PETITION
Filed: May 10, 2005	:	
Attorney Docket No. 29489	:	

This is a decision on the petition under the unintentional provisions of 37 CFR 1.137(b), filed October 19, 2009, to revive the above-identified application.

The petition is **GRANTED**.

This application became abandoned for failure to timely reply to the final Office action mailed December 18, 2008. No extensions of time under the provisions of 37 CFR 1.136(a) were obtained. Accordingly, this application became abandoned on March 19, 2009. A Notice of Abandonment was mailed July 20, 2009.

The petition satisfies the requirements of 37 CFR 1.137(b) in that petitioner has supplied (1) the reply in the form of a Request for Continued Examination (RCE) and fee of $405.00 and the submission required by 37 CFR 1.114; (2) the petition fee of $810.00; and (3) a proper statement of unintentional delay.

Telephone inquiries concerning this decision should be directed to the undersigned at (571) 272-7751.

This matter is being referred to Technology Center 1645 for processing of the Request for Continued Examination under 37 CFR 1.114 and the Amendment filed with the instant petition.

Joan Olszewski
Petitions Examiner
Office of Petitions

21 NOV 2005

UNITED STATES PATENT AND TRADEMARK OFFICE

Commissioner for Patents
United States Patent and Trademark Office
P.O. Box 1450
Alexandria, VA 22313-1450
www.uspto.gov

Laurie A. Axford
Burns, Doane, Swecker & Mathis, LLP
Suite 400
402 W. Broadway
San Diego, CA 92101-3542

In re Application of	:	
OFFORD	:	
Application No.: 10/534,547	:	
PCT No.: PCT/US03/34435	:	DECISION ON PETITION
Int. Filing Date: 29 October 2003	:	
Priority Date: 05 November 2002	:	UNDER 37 CFR 1.137(b)
Atty. Docket No.: 034214-201	:	
For: ODOR-ABSORBING CELLULOSIC	:	
FIBROUS SUBSTRATES	:	

The petition to revive under 37 CFR 1.137(b) filed 10 May 2005 in the above-captioned application is hereby **GRANTED** as follows:

Applicant's statement that "the entire delay in filing the required reply from the due date for the required reply until the filing of a grantable petition under 37 CFR 1.137(b) was unintentional" and the prompt filing of the petition satisfies the requirement of 37 CFR 1.137(b)(3).

A review of the application file reveals that applicant has now provided payment of the full, U.S. Basic National Fee. Therefore, the request to revive the application abandoned under 35 U.S.C. 371(d) is granted as to the National stage in the United States of America.

This application is being forwarded to the United States Designated/Elected Office (US/DO/EO) for continued processing including the issuance of a Notification of Missing Requirements (Form PCT/DO/EO/905) indicating that an executed oath or declaration of the inventor is required.

Derek A. Putonen
Attorney Advisor
Office of PCT Legal Administration
Tel: (571) 272-3294
Fax: (571) 273-0459

27 FEB 2006

#8

UNITED STATES PATENT AND TRADEMARK OFFICE

Commissioner for Patents
United States Patent and Trademark Office
P.O. Box 1450
Alexandria, VA 22313-1450
www.uspto.gov

Thomas E. Ciotti
Morrison & Foerster, LLP
755 Page Mill Road
Palo Alto, CA 94304-1018

In re Application of OFFORD Application No.: 10/534,547 PCT No.: PCT/US03/34435 Int. Filing Date: 29 October 2003 Priority Date: 05 November 2002 Atty Docket No.: 400752003100 For: ODOR-ABSORBING CELLULOSIC FIBROUS SUBSTRATES	DECISION ON PETITION UNDER 37 CFR 1.181

This decision is in response to applicant's "Communication" filed 13 February 2006 in the United States Patent and Trademark Office (USPTO). The communication is being treated asa petition under 37 CFR 1.181. No petition fee is required.

BACKGROUND

On 21 November 2005, applicant was mailed a decision granting applicant's petition to revive the present U.S. National stage application.

On 05 December 2005, applicant was mailed a NOTIFICATION OF MISSING REQUIREMENTS UNDER 35 U.S.C. 371 (Form PCT/DO/EO/905) informing applicant of the need to provide an executed oath or declaration of the inventor, in compliance with 37 CFR 1.497(a) and (b), identifying the application by the international application number and international filing date. Applicant was given two months to respond and advised that this time period could be extended with a proper petition and payment of fees.

On 13 February 2006, applicant filed the present petition indicating that a declaration of the inventor and revocation and power of attorney had been filed on 23 November 2005.

DISCUSSION

Applicant has provided a legible copy of the receipt postcard which shows a USPTO date stamp, "IAP3 Rec'd PCT/PTO 23 NOV 2005" and clearly identifies in part: "Oath or declaration of the inventor(s) (1 page), Revocation of Power of Attorney With New Power of Attorney (1 Page)" as well as listing the inventor, serial number, title and attorney docket number. The evidence is sufficient to establish that the executed declaration and revocation of power of attorney were received in the USPTO on 23 November 2005. Applicant has certified that the

presently filed copies of the documents are true and complete copies of the papers originally filed on 23 November 2005. As such, it is proper to accept the presently filed declaration of inventor Offord as having been filed on 23 November 2005 and to **GRANT** applicant's petition at this time.

CONCLUSION

Applicant's petition under 37 CFR 1.181 is **GRANTED**.

A courtesy copy of the decision mailed 21 November 2005 is enclosed.

The "NOTIFICATION OF MISSING REQUIREMENTS UNDER 35 U.S.C. 371 (Form PCT/DO/EO/905) mailed 05 December 2005 is hereby **VACATED**.

The application will be given an international filing date of 29 October 2003 under 35 U.S.C. 363 and a date of **23 November 2005** under 35 U.S.C. 371(c)(1), (c)(2) and (c)(4).

This application is being returned to the United States Designated/Elected Office (US/DO/EO) for further processing in accordance with this decision, namely 1) the issuance of a "Notification of Acceptance of Application Under 35 U.S.C. 371 and 37 CFR 1.494 or 1.495" (Form PCT/DO/EO/903) indicating a 371 date as detailed above and 2) changing the correspondence address for this application to that of customer number 25226.

Derek A. Putonen
Attorney Advisor
Office of PCT Legal Administration
Tel: (571) 272-3294
Fax: (571) 273-0459

Encl: Copy of decision mailed 21 November 2005.

21 NOV 2005

UNITED STATES PATENT AND TRADEMARK OFFICE

Commissioner for Patents
United States Patent and Trademark Office
P.O. Box 1450
Alexandria, VA 22313-1450
www.uspto.gov

Laurie A. Axford
Burns, Doane, Swecker & Mathis, LLP
Suite 400
402 W. Broadway
San Diego, CA 92101-3542

In re Application of OFFORD Application No.: 10/534,547 PCT No.: PCT/US03/34435 Int. Filing Date: 29 October 2003 Priority Date: 05 November 2002 Atty. Docket No.: 034214-201 For: ODOR-ABSORBING CELLULOSIC FIBROUS SUBSTRATES	DECISION ON PETITION UNDER 37 CFR 1.137(b)

The petition to revive under 37 CFR 1.137(b) filed 10 May 2005 in the above-captioned application is hereby **GRANTED** as follows:

Applicant's statement that "the entire delay in filing the required reply from the due date for the required reply until the filing of a grantable petition under 37 CFR 1.137(b) was unintentional" and the prompt filing of the petition satisfies the requirement of 37 CFR 1.137(b)(3).

A review of the application file reveals that applicant has now provided payment of the full, U.S. Basic National Fee. Therefore, the request to revive the application abandoned under 35 U.S.C. 371(d) is granted as to the National stage in the United States of America.

This application is being forwarded to the United States Designated/Elected Office (US/DO/EO) for continued processing including the issuance of a Notification of Missing Requirements (Form PCT/DO/EO/905) indicating that an executed oath or declaration of the inventor is required.

Derek A. Putonen
Attorney Advisor
Office of PCT Legal Administration
Tel: (571) 272-3294
Fax: (571) 273-0459

UNITED STATES PATENT AND TRADEMARK OFFICE

Commissioner for Patents
United States Patent and Trademark Office
P.O. Box 1450
Alexandria, VA 22313-1450
www.uspto.gov

02 OCT 2006

DUANE MORRIS, LLP
IP DEPARTMENT
30 SOUTH 17TH STREET
PHILADELPHIA PA 19103-4196

In re Application of	:	
FATH, Andreas	:	
Application No.: 10/534,560	:	DECISION ON
PCT No.: PCT/EP03/12697	:	
Int. Filing Date: 13 November 2003	:	PETITIONS
Priority Date: 14 November 2002	:	
Attorney Docket No.: D700-00394	:	UNDER 37 CFR 1.137(a) and 1.181
For: COATING METHOD	:	

This decision is in response to applicant's petitions to revive the application for unavoidable abandonment and to withdraw the holding of abandonment, filed on 23 January 2006.

BACKGROUND

On 13 November 2003, applicant filed international application PCT/EP03/12697, claiming a priority date of 14 November 2002. A copy of the international application was communicated to the United States Patent and Trademark Office (USPTO) from the International Bureau on 27 May 2004. The thirty month period for paying the basic national fee in the United States expired on 14 May 2005.

On 11 May 2005, applicant submitted a transmittal letter for entry into the national phase in the United States, accompanied by an authorization to charge deposit account no. 04-1679.

On 02 November 2005, the Office mailed Notice of Abandonment (Form PCT/DO/EO/909) indicating that the application went abandoned for failure to pay the basic national fee by thirty months.

On 23 January 2006, applicant submitted the instant petitions.

DISCUSSION

Applicant argues that deposit account no. 04-1679 had sufficient funds to cover the basic national fee on 16 May 2005, when it was charged and the application should not be abandoned. As evidence, applicants have submitted a printout from their online deposit account statement.

The online deposit account statement is not sorted by time stamp on the transaction reflecting the order in which the account was charged, but by sale sequence number. Thus, customers viewing their account balance online can believe they have sufficient balance when they do not.

A review of the transactions in time stamp order for 16 May 2005, indicates that the deposit account balance dropped below the $300 level required for the basic national fee on the afternoon of 13 May 2005 (accounting day 16 May 2005). As such, there was not enough money present to cover the charges.

Petition Under 37 CFR 1.137(a)

A petition to revive an application for patent unavoidably abandoned under 37 CFR 1.137(a) must be accompanied by: (1) the required reply, (2) the petition fee, (3) a satisfactory showing that the entire delay in filing the required reply from the due date for the reply until the filing of a grantable petition to 1.137(a) was unavoidable and (4) a terminal disclaimer if application was filed before June 8, 1995.

Items (1), (2) and (4) have been met. Applicant has now paid the basic national fee and the petition fee. A terminal disclaimer is not required as the application was filed on or after 08 June 1995. The fee for late furnishing of the search fee, examination fee or oath or declaration will be charged to deposit account no. 04-1679, as authorized.

Item (3) has not been satisfied. Failure to maintain a sufficient deposit account balance is not an unavoidable error that could not have been averted by the care that one takes with one's most important business.

Applicants may wish to consider filing a petition under 37 CFR 1.137(b) for unintentional delay.

CONCLUSION

For the reasons set forth above, the petition under 37 CFR 1.137(a) is **DISMISSED** without prejudice. The petition under 37 CFR 1.181 is **DISMISSED** without prejudice.

If reconsideration on the merits of this petition is desired, a proper response must be filed within TWO (2) MONTHS from the mail date of this decision. Any reconsideration request should include a cover letter entitled "Renewed Petition Under 37 CFR 1.137(a) and 1.181"

Any further correspondence with respect to this matter should be addressed to the Mail Stop PCT, Commissioner for Patents, Office of PCT Legal Administration, P.O. Box 1450, Alexandria, Virginia 22313-1450, with the contents of the letter marked to the attention of the Office of PCT Legal Administration.

Erin P. Thomson

Erin P. Thomson
Attorney Advisor
PCT Legal Administration

Telephone: 571-272-3292
Facsimile: 571-273-0459

#6

UNITED STATES PATENT AND TRADEMARK OFFICE

Commissioner for Patents
United States Patent and Trademark Office
P.O. Box 1450
Alexandria, VA 22313-1450
www.uspto.gov

24 NOV 2006

DUANE MORRIS, LLP
IP DEPARTMENT
30 SOUTH 17TH STREET
PHILADELPHIA PA 19103-4196

In re Application of	:	
FATH, Andreas	:	
Application No.: 10/534,560	:	DECISION ON
PCT No.: PCT/EP03/12697	:	
Int. Filing Date: 13 November 2003	:	PETITION
Priority Date: 14 November 2002	:	
Attorney Docket No.: D700-00394	:	UNDER 37 CFR 1.137(b)
For: COATING METHOD	:	

Applicant's "Petition For Revival of an International Application For Patent Designating the U.S. Abandoned Unintentionally Under 37 CFR 1.137(b)," filed in the above-captioned application on 20 October 2006 is **GRANTED**.

Applicant indicates that the entire delay in filing the required reply from the due date for the required reply until the filing of a grantable petition under 37 CFR 1.137(b) was unintentional, as required by 37 CFR 1.137(b)(3). The appropriate national fee and petition fee have been submitted. A terminal disclaimer is not required as the application was filed on or after 08 June 1995. Accordingly, all requirements under 37 CFR 1.137(b) have been satisfied.

A signed oath or declaration has not yet been submitted. The fee for late filing of the search fee, examination fee or oath or declaration has been paid.

This application is being forwarded to the National Stage Processing Branch of the Office of PCT Operations for continued processing in accordance with this decision, including the mailing of a Notification of Missing Requirements (Form PCT/DO/EO/905) indicating that an oath or declaration in compliance with 37 CFR 1.497(a)-(b) is required.

Erin P. Thomson

Erin P. Thomson
Attorney Advisor
PCT Legal Administration

Telephone: 571-272-3292
Facsimile: 571-273-0459

25 MAY 2006
United States Patent and Trademark Office

#6

Commissioner for Patents
United States Patent and Trademark Office
P.O. Box 1450
Alexandria, VA 22313-1450
www.uspto.gov

Technoprop Colton LLC
P.O. Box 567685
Atlanta, GA 31156-7685

In re Application of Focke et al. Application No.: 10/534,566 PCT No.: PCT/EP03/13268 Int. Filing Date: 26 November 2003 Priority Date: 27 November 2002 Attorney Docket No.: 20605.019US For: Method And Device For Erecting Blanks Cut From Paperboard	:	DECISION

This is a decision on the "Petition To Add Inventor" filed on 17 November 2005, which is being treated under 37 CFR 1.42.

DISCUSSION

This international application was filed on 26 November 2003 and claimed a priority date of 27 November 2002. The United States was designated. The International Bureau communicated a copy of the published international application to the USPTO on 10 June 2004. Consequently, the thirty month period for payment of the basic national fee in the United States expired as of midnight on 27 May 2005. On 11 May 2005, applicants filed *inter alia* the basic national fee.

On 02 November 2005, a Notification of Missing Requirements (Form PCT/DO/EO/905) was mailed to applicants, requiring the submission of an oath or declaration of the inventors in compliance with 37 CFR 1.497(a) and (b).

DISCUSSION

Inspection of the published international application reveals that Heinz Focke was listed among the applicants/inventors therein. Applicants state that he "was inadvertently omitted on the transmittal pages. The applicants/inventors were taken from the PCT Publication and on the PCT Publication the applicants/inventors are split between two columns, because the first named inventor is deceased and therefore listed separately, the first named inventor was overlooked." Based on the totality of the evidence of record, including petitioner's explanation as well as the published international application, it would be appropriate to conclude that the inventive entity included Heinz Focke, such that Applicants' arguments concerning the omission of his name are moot.

Further inspection of the application file reveals that, on the declaration of the inventors filed on 17 November 2005, Heinz Focke is indicated to be "deceased." 37 CFR 1.42 provides that

> In case of the death of the inventor, the legal representative (executor, administrator, etc.) of the deceased inventor may make the necessary oath or declaration, and apply for and obtain the patent.

Meanwhile, 37 CFR 1.497(b)(2), as amended effective 08 September 2000, provides that

> If the person making the oath or declaration is not the inventor (§§ 1.42, 1.43 or 1.47), the oath or declaration shall state the relationship of the person to the inventor, and, upon information and belief, the facts which the inventor would have been required to state. If the person signing the oath or declaration is the legal representative of a deceased inventor, the oath or declaration shall also state that the person is a legal representative and the citizenship, residence and mailing address of the legal representative.

Further examination of the declaration reveals that it has been executed on behalf of Heinz Focke by both Doris Focke and Jurgen Focke in the capacity of "heir." The declaration further states that "Doris Focke and Jurgen Focke are the sole heirs and legal representatives of Heinz Focke." The declaration document furnishes citizenship, residence and postal address information for each of Heinz Focke, Doris Focke and Jurgen Focke. Based on the totality of the circumstances presented, it would be appropriate to accept the declaration under 37 CFR 1.42 at this time.

CONCLUSION

The declaration is **ACCEPTED** under 37 CFR 1.42.

This application is being forwarded to the National Stage Processing Branch for continued processing., including the preparation and mailing of a Notification of Missing Requirements (Form PCT/DO/EO/905) requiring payment of the $130.00 surcharge under 37 CFR 1.492(h). It is noted that no appropriate Deposit Account authorization appears to be present in the file.

Richard Cole
PCT Legal Examiner
Office of PCT Legal Administration

George M. Dombroske
PCT Legal Examiner
Office of PCT Legal Administration
Tel: (571) 272-3283
Fax: (571) 273-0459

UNITED STATES PATENT AND TRADEMARK OFFICE

UNITED STATES DEPARTMENT OF COMMERCE
United States Patent and Trademark Office
Address: COMMISSIONER FOR PATENTS
P.O. Box 1450
Alexandria, Virginia 22313-1450
www.uspto.gov

BACHMAN & LAPOINTE, P.C.
900 CHAPEL STREET
SUITE 1201
NEW HAVEN, CT 06510

Mail Date: 06/18/2010

Applicant	: Reinhard Bauer	: DECISION ON REQUEST FOR
Patent Number	: 7635232	: RECALCULATION of PATENT
Issue Date	: 12/22/2009	: TERM ADJUSTMENT IN VIEW
Application No	: 10/534,570	: OF WYETH AND NOTICE OF INTENT TO
Filed	: 08/08/2005	: ISSUE CERTIFICATE OF CORRECTION
		:

The Request for Recalculation is **GRANTED** to the extent indicated.

The patent term adjustment has been determined to be **967** days. The USPTO will *sua sponte* issue a certificate of correction reflecting the amount of PTA days determined by the recalculation.

Prior to the issuance of the certificate of correction, the USPTO will afford patentee an opportunity to be heard and request reconsideration. Accordingly, patentee has **one month or thirty (30) days**, whichever is longer, to file a request for reconsideration of this patent term adjustment calculation. See 35 U.S.C. 154(b)(3)(B)(ii) and 37 CFR 1.322(a)(4). No extensions of time will be granted under 37 CFR 1.136.

Patentee should use document code PET.OP if electronically filing a request for reconsideration of this patent term adjustment calculation. The patentee must also include the information required by 37 CFR 1.705(b)(2) and the fee required by 37 CFR 1.18(e). If patentee does not file a timely request for reconsideration of this patent term adjustment calculation including the information required by 37 CFR 1.705(b)(2) and the fee required by 37 CFR 1.18(e), the USPTO will issue a certificate of correction reflecting the PTA determination noted above.

Patentee should be aware that in order to preserve the right to review in the United States District Court for the District of Columbia of the USPTO patent term adjustment determination, patentee must ensure that he or she also take the steps required under 35 U.S.C. 154(b)(4)(A) in a timely manner. Nothing in the request for recalculation should be construed as providing an alternative time frame for commencing a civil action under 35 U.S.C. 154(b)(4)(A).

Any questions concerning this decision should be directed to the Office of Patent Legal Administration at 571-272-7702.

UNITED STATES PATENT and TRADEMARK OFFICE

COMMISSIONER FOR PATENTS
UNITED STATES PATENT AND TRADEMARK OFFICE
P.O BOX 1450
ALEXANDRIA, VA 22313-1450
www.uspto.gov

3 1 MAR 2008

Kimberly H. Lu
Thompson Coburn LLP
One US Bank Plaza
St. Louis, MO 63101

In re Application of	:	DECISION ON
Rice III et al	:	
Application No.: 10/534,571	:	
PCT No.: PCT/US2003/036634	:	PETITION UNDER
Filing Date: 13 November 2003	:	
Attorney's Docket No.: 56029-54474	:	
For: Highly Permissive... Virus Replication	:	37 CFR 1.78(a)(6)

This is in response to applicant's communication "PETITION TO ACCEPT UNINTENTIONALLY DELAYED CLAIM FOR PRIORITY (37 CFR 1.78(a)(3))" filed 08 November 2007, which is being treated as a petition under 37 CFR 1.78(a)(6) to accept an unintentionally delayed claim under 35 U.S.C. §119(e) for the benefit of the prior-filed provisional application set forth in the concurrently filed amendment.

The petition is **GRANTED**.

A petition under 37 CFR 1.78(a)(6) is only applicable to those applications filed on or after November 29, 2000. Further, the petition is appropriate only after expiration of the period specified in 37 CFR 1.78(a)(5)(ii) and must be filed during the pendency of the nonprovisional application. In addition, the petition must be accompanied by:

(1) the reference required by 35 U.S.C. § 119(e) and 37 CFR 1.78(a)(5)(i)to the prior-filed application, unless previously submitted;
(2) the surcharge set forth in § 1.17(t); and
(3) a statement that the entire delay between the date the claim was due under 37 CFR 1.78(a)(5)(ii) and the date the claim was filed was unintentional. The commissioner may require additional information where there is a question whether the delay was unintentional.

The instant pending nonprovisional application was filed after November 29, 2000, and the claim herein for the benefit of priority to the prior-filed provisional application is submitted after expiration of the period specified in 37 CFR 1.78(a)(5)(ii). Therefore, this is a proper petition under 37 CFR 1.78(a)(6).

The petition complies with the requirements for a grantable petition under 37 CFR 1.78(a)(6) in that:

(1) a reference to the above-noted, prior-filed provisional application has been included in an amendment to the first sentence of the specification following the title, as provided by 37 CFR 1.78(a)(5)(iii);

(2) the surcharge fee required by 37 CFR 1.17(t) has been submitted; and

(3) the petition is being construed to have the proper statement of unintentional delay with respect to the delayed claim under 35 U.S.C. § 119(e) rather than the claim under 35 U.S.C. § 120 as the petition has not added a benefit claim under 35 USC 120. If this is incorrect, petitioner must immediately notify the Office of PCT Legal Administration.

Accordingly, having found that the instant petition for acceptance of an unintentionally delayed claim for the benefit of priority under 35 U.S.C. § 119(e) to the above-noted, prior-filed provisional application satisfies the conditions of 37 CFR 1.78(a)(6), the petition is granted.

The granting of the petition to accept the delayed benefit claim to the prior-filed application under 37 CFR 1.78(a)(6) should not be construed as meaning that the instant application is entitled to the benefit of the filing date of the prior-filed application. In order for the instant application to be entitled to the benefit of the prior-filed application, all other requirements under 35 U.S.C. §119(e) and 37 CFR 1.78(a)(4) and (a)(5) must be met. Similarly, the fact that the corrected Filing Receipt accompanying this decision on petition includes the prior-filed application should not be construed as meaning that applicant is entitled to the claim for benefit of priority to the prior-filed application noted thereon. Accordingly, the examiner will, in due course, consider this benefit claim and determine whether the instant application is entitled to the benefit of the earlier filing date.

CONCLUSION

For the reasons above, the petition under 37 CFR 1.78(a)(6) is **GRANTED.**

This application will be forwarded to the proper Technology Center.

Any questions concerning this decision may be directed to Rafael Bacares at (571) 272-3276. All other inquiries concerning either the examination procedure or status of the application should be directed to the Technology Center.

Milef Boris
PCT Legal Examiner
Office of Legal Administration

UNITED STATES PATENT AND TRADEMARK OFFICE

UNITED STATES DEPARTMENT OF COMMERCE
United States Patent and Trademark Office
Address: COMMISSIONER FOR PATENTS
P.O. Box 1450
Alexandria, Virginia 22313-1450
www.uspto.gov

APPLICATION NUMBER	FILING or 371(c) DATE	GRP ART UNIT	FIL FEE REC'D	ATTY.DOCKET.NO	TOT CLAIMS	IND CLAIMS
10/534,571	10/11/2005	1648	1930	56029-54474	38	5

CONFIRMATION NO. 4463

CORRECTED FILING RECEIPT

70119
THOMPSON COBURN LLP
ATTN: RICHARD E. HAFERKAMP
ONE U.S. BANK PLAZA
SAINT LOUIS, MO 63101

OC000000029139779

Date Mailed: 04/01/2008

Receipt is acknowledged of this non-provisional patent application. The application will be taken up for examination in due course. Applicant will be notified as to the results of the examination. Any correspondence concerning the application must include the following identification information: the U.S. APPLICATION NUMBER, FILING DATE, NAME OF APPLICANT, and TITLE OF INVENTION. Fees transmitted by check or draft are subject to collection. Please verify the accuracy of the data presented on this receipt. **If an error is noted on this Filing Receipt, please write to the Office of Initial Patent Examination's Filing Receipt Corrections. Please provide a copy of this Filing Receipt with the changes noted thereon. If you received a "Notice to File Missing Parts" for this application, please submit any corrections to this Filing Receipt with your reply to the Notice. When the USPTO processes the reply to the Notice, the USPTO will generate another Filing Receipt incorporating the requested corrections**

Applicant(s)

Charles M. Rice III, New York, NY;
Keril J. Blight, St. Louis, MO;

Power of Attorney: The patent practitioners associated with Customer Number 21888

Domestic Priority data as claimed by applicant

This application is a 371 of PCT/US03/36634 11/13/2003
which claims benefit of 60/426,256 11/13/2002

Foreign Applications

If Required, Foreign Filing License Granted: 05/09/2006

The country code and number of your priority application, to be used for filing abroad under the Paris Convention, is **US 10/534,571**

Projected Publication Date: Not Applicable

Non-Publication Request: No

Early Publication Request: No

Title

HIGHLY PERMISSIVE CELL LINES FOR HEPATITIS C VIRUS RNA REPLICATION

Preliminary Class

435

PROTECTING YOUR INVENTION OUTSIDE THE UNITED STATES

Since the rights granted by a U.S. patent extend only throughout the territory of the United States and have no effect in a foreign country, an inventor who wishes patent protection in another country must apply for a patent in a specific country or in regional patent offices. Applicants may wish to consider the filing of an international application under the Patent Cooperation Treaty (PCT). An international (PCT) application generally has the same effect as a regular national patent application in each PCT-member country. The PCT process **simplifies** the filing of patent applications on the same invention in member countries, but **does not result** in a grant of "an international patent" and does not eliminate the need of applicants to file additional documents and fees in countries where patent protection is desired.

Almost every country has its own patent law, and a person desiring a patent in a particular country must make an application for patent in that country in accordance with its particular laws. Since the laws of many countries differ in various respects from the patent law of the United States, applicants are advised to seek guidance from specific foreign countries to ensure that patent rights are not lost prematurely.

Applicants also are advised that in the case of inventions made in the United States, the Director of the USPTO must issue a license before applicants can apply for a patent in a foreign country. The filing of a U.S. patent application serves as a request for a foreign filing license. The application's filing receipt contains further information and guidance as to the status of applicant's license for foreign filing.

Applicants may wish to consult the USPTO booklet, "General Information Concerning Patents" (specifically, the section entitled "Treaties and Foreign Patents") for more information on timeframes and deadlines for filing foreign patent applications. The guide is available either by contacting the USPTO Contact Center at 800-786-9199, or it can be viewed on the USPTO website at http://www.uspto.gov/web/offices/pac/doc/general/index.html.

For information on preventing theft of your intellectual property (patents, trademarks and copyrights), you may wish to consult the U.S. Government website, http://www.stopfakes.gov. Part of a Department of Commerce initiative, this website includes self-help "toolkits" giving innovators guidance on how to protect intellectual property in specific countries such as China, Korea and Mexico. For questions regarding patent enforcement issues, applicants may call the U.S. Government hotline at 1-866-999-HALT (1-866-999-4158).

LICENSE FOR FOREIGN FILING UNDER

Title 35, United States Code, Section 184

Title 37, Code of Federal Regulations, 5.11 & 5.15

GRANTED

The applicant has been granted a license under 35 U.S.C. 184, if the phrase "IF REQUIRED, FOREIGN FILING LICENSE GRANTED" followed by a date appears on this form. Such licenses are issued in all applications where the conditions for issuance of a license have been met, regardless of whether or not a license may be required as

set forth in 37 CFR 5.15. The scope and limitations of this license are set forth in 37 CFR 5.15(a) unless an earlier license has been issued under 37 CFR 5.15(b). The license is subject to revocation upon written notification. The date indicated is the effective date of the license, unless an earlier license of similar scope has been granted under 37 CFR 5.13 or 5.14.

This license is to be retained by the licensee and may be used at any time on or after the effective date thereof unless it is revoked. This license is automatically transferred to any related applications(s) filed under 37 CFR 1.53(d). This license is not retroactive.

The grant of a license does not in any way lessen the responsibility of a licensee for the security of the subject matter as imposed by any Government contract or the provisions of existing laws relating to espionage and the national security or the export of technical data. Licensees should apprise themselves of current regulations especially with respect to certain countries, of other agencies, particularly the Office of Defense Trade Controls, Department of State (with respect to Arms, Munitions and Implements of War (22 CFR 121-128)); the Bureau of Industry and Security, Department of Commerce (15 CFR parts 730-774); the Office of Foreign AssetsControl, Department of Treasury (31 CFR Parts 500+) and the Department of Energy.

NOT GRANTED

No license under 35 U.S.C. 184 has been granted at this time, if the phrase "IF REQUIRED, FOREIGN FILING LICENSE GRANTED" DOES NOT appear on this form. Applicant may still petition for a license under 37 CFR 5.12, if a license is desired before the expiration of 6 months from the filing date of the application. If 6 months has lapsed from the filing date of this application and the licensee has not received any indication of a secrecy order under 35 U.S.C. 181, the licensee may foreign file the application pursuant to 37 CFR 5.15(b).

06 SEP 2006

UNITED STATES PATENT AND TRADEMARK OFFICE

Commissioner for Patents
United States Patent and Trademark Office
P.O. Box 1450
Alexandria, VA 22313-1450
www.uspto.gov

SCHWEGMAN, LUNDBERG, WOESSNER & KLUTH
P.O. Box 2938
Minneapolis, MN 55402

In re Application of: WENTWORTH, Paul, et al.
U.S. Application No.: 10/534,574
(previously identified as 10/535,180)
PCT No.: PCT/EP2003/012710
Int. Filing Date: 13 November 2003
Priority Date: 14 November 2002
Attorney's Docket No.: PI/4-3337A
For: ANTIBODY– OR NEUTROPHIL – MEDIATED OZONE GENERATION

DECISION

This decision is issued in response to the "Petition To Revive Abandoned Application Under 37 CFR 1.137(b)" filed by above-named counsel on 12 June 2006. Applicants have included an authorization to charge Deposit Account No. 19-0743 the required petition fee.

BACKGROUND

In a Communication mailed by this Office on 18 August 2005 to Thomas Fitting (the agent who filed the national stage materials originally assigned U.S. application number 10/535,180), this Office informed Mr. Fitting that a different agent had filed separate papers in the USPTO seeking entry into the U.S. national stage for PCT/EP2003/012710, and that there could only be a single U.S national stage for the international application. A similar Communication was mailed to the attorney who filed the other set of national stage papers.

The Communication mailed 18 August 2005 required counsel to submit an executed oath or declaration in compliance with 37 CFR 1.497(a)-(b) and confirmation that counsel had been appointed as applicants' representative with respect to the national stage of PCT/EP2003/012710. The Communication provided a two-month deadline for response.

Neither Mr. Fitting nor the agent who filed the other set of national stage papers filed a timely and proper response to the 18 August 2005 Communication. Accordingly, the U.S. national stage of PCT/2003/012710 became **ABANDONED** at midnight on 18 October 2005.

The papers filed by both agents with respect to the national stage of PCT/EP2003/012710 have been combined into a single application file, U.S. application number 10/534,574; duplicative U.S. application number 10/535,180 will be discontinued. Accordingly, all future communications with respect to the U.S. national stage of PCT/EP2003/012710 should be directed to U.S. application number 10/534,574.

On 12 June 2006, above-named counsel filed the petition for revival under 37 CFR 1.137(b) considered herein. The petition was filed under the discontinued U.S. application number 10/535,180, but is being considered herein.

DISCUSSION

The petition under 37 CFR 1.137(b) filed 12 June 2006 in the above-captioned application is hereby **GRANTED** as follows:

Applicants' statements in the petition are construed as the statement required by 37 CFR 1.137(b)(3), that is, a statement that "the entire delay in filing the required reply from the dues date for the required reply until the filing of a grantable petition under 37 CFR 1.137(b) was unintentional." Based on this interpretation, 37 CFR 1.137(b)(3) is considered satisfied. Applicants must notify this Office immediately if this is not a correct interpretation of such statements.

Applicants have now submitted an executed declaration in compliance with 37 CFR 1.497 and an appointment of counsel, as required by the 18 August 2005 Communication, and the requirements of 37 CFR 1.137(b) have been satisfied. Therefore the request to revive the U.S. national stage of PCT/EP2003/012710 is appropriately granted.

Deposit Account No. 19-0743 will be charged the $130 surcharge for filing the declaration later than thirty months after the priority date.

It is noted that the papers filed by separate counsel to initiate this national stage application included a preliminary amendment that will be used herein.

CONCLUSION

The petition to revive the U.S. national stage of PCT/EP2003/012710 is **GRANTED**.

The two sets of papers filed by different agents to initiate this national stage application have been consolidated into a single file, U.S. application number 10/534,574.

Duplicative application number 10/535,180 will be discontinued.

All future correspondence with respect to the U.S. national stage of PCT/EP2003/012710 should be directed to U.S. application number 10/534,574.

The application is being forwarded to the National Stage Processing Branch of the Office of PCT Operations for further processing in accordance with this decision. The date under 35 U.S.C. 371(c)(1), (c)(2), and (c)(4) is 12 June 2006.

Richard M. Ross
Attorney Advisor
Office Of PCT Legal Administration
Telephone: (571) 272-3296
Facsimile: (571) 273-0459

UNITED STATES PATENT AND TRADEMARK OFFICE

Commissioner for Patents
United States Patent and Trademark Office
P.O. Box 1450
Alexandria, VA 22313-1450
www.uspto.gov

SCHWEGMAN, LUNDBERG, WOESSNER & KLUTH, P.A.
P.O. BOX 2938
MINNEAPOLIS MN 55402

COPY MAILED

JUL 3 1 2007

OFFICE OF PETITIONS

In re Application of :
WENTWORTH, et al. :
Application No. 10/534,574 : DECISION ON PETITION
Filed: June 12, 2006 : TO WITHDRAW
Attorney Docket No. PI/4-3337A : FROM RECORD
:

This is a decision on the Request to Withdraw as attorney or agent of record under 37 C.F.R. § 1.36(b), filed January 10, 2007.

The request is **NOT APPROVED** as moot.

A review of the file record indicates that the power of attorney to SCHWEGMAN LUNDBERG WOESSNER & KLUTH PA has been revoked by the assignee of the patent application on January 17, 2007. Accordingly, the request to withdraw under 37 C.F.R. § 1.36(b) is moot.

All future communications from the Office will continue to be directed to the below-listed address until otherwise notified by applicant.

Telephone inquires concerning this decision should be directed to the undersigned at 571-272-7253.

Monica A. Graves
Petitions Examiner
Office of Petitions

cc: **THE SCRIPPS RESEARCH INSTITUTE**
OFFICE OF PATENT COUNSEL, TPC-8
10550 NORTH TORREY PINES ROAD
LA JOLLA, CA 92037

29 SEP 2005

UNITED STATES PATENT AND TRADEMARK OFFICE

#3

Commissioner for Patents
United States Patent and Trademark Office
P.O. Box 1450
Alexandria, VA 22313-1450
www.uspto.gov

THE SCRIPPS RESEARCH INSTITUTE
10550 North Torrey Pines Road, TPC-8
La Jolla, CA 92037

In re Application of WENTWORTH, Paul *et al* Application No.: 10/534,575 PCT No.: PCT/EP03/12709 Int. Filing Date: 13 November 2003 Priority Date: 14 November 2002 Attorney's Docket No.: TSRI 784.5 US For: ANTIMICROBIAL ACTIVITY OF ANTIBODIES PRODUCING REACTIVE OXYGEN SPECIES	**DECISION**

This application is before the Office of PCT Legal Administration for matters arising under 35 U.S.C. 371.

BACKGROUND

On 11 May 2005, papers to enter the national stage of PCT/EP03/12709 were filed using an attorney docket number of PI/4-33376A. This application was given U.S. application number 10/534,575.

On 16 May 2005, a duplicate national stage application for PCT/EP03/12709 was filed using an attorney docket number of TSRI 784.5 US. This application was denoted as U.S. application number 10/534,997 but a postcard receipt was not mailed because a prior national stage application was already filed.

On 13 May 2005, after a discussion with each of the undersigned agents, the agent in the first application submitted a "Request to Withdraw Application" and refund all fees paid in that first application (attorney docket number PI/4-33376A).

DISCUSSION

As is evident from the above recited facts, two sets of papers to enter the national stage were submitted for international application PCT/EP03/12709. The end result for an international application designating the United States of America is a single U.S. national stage application.

Therefore, the submission of two sets of national stage papers to enter the United States was improper.

However, applicants may not withdraw the first application and obtain a refund of fees paid. Applicants have no authority to withdraw the application as no attorney has been appointed. *See* 37 CFR 1.138. Moreover, the fees submitted in the first application (attorney docket number of PI/4-33376A) were properly paid and may not be refunded.

Both applications will be merged into one national stage application for PCT/EP03/12709 with a U.S. application No. 10/534,575.

CONCLUSION

Applicants request to withdraw the first application and obtain a refund of fees paid is hereby **DISMISSED** without prejudice.

Applicants are advised that U.S. application No. 10/534,997 is no longer a valid U.S. National stage application. Applicants must use only U.S. application No. **10/534,575** for all correspondence.

The request to withdraw the application by the agent of the first application has been construed as requesting that the agent of record be changed. This has been done. All mail in the above-captioned application will be sent to the address of the agent in the second application (attorney docket number of TSRI 784.5 US).

The $2,600.00 in fees charged in the second case (attorney docket number of TSRI 784.5 US) have been credited back to Deposit Account No. 19-0962.

This application is being forwarded to the National Stage Processing Division of the Office of PCT Operations for continued processing.

James Thomson

James Thomson
Attorney Advisor
Office of PCT Legal Administration

Tel.: (571) 272-3302

cc: Gregory D. Ferraro
NOVARTIS
Corporate Intellectual Property
One Health Plaza, Bldg. 104
East Hanover, NJ 07936-1080

UNITED STATES PATENT AND TRADEMARK OFFICE

Commissioner for Patents
United States Patent and Trademark Office
P.O. Box 1450
Alexandria, VA 22313-1450
www.uspto.gov

SCHWEGMAN, LUNDBERG, WOESSNER & KLUTH, P.A.
P.O. BOX 2938
MINNEAPOLIS MN 55402

COPY MAILED

JUL 3 1 2007

OFFICE OF PETITIONS

In re Application of :
WENTWORTH, et al. :
Application No. 10/534,575 : DECISION ON PETITION
Filed: June 5, 2006 : TO WITHDRAW
Attorney Docket No. 1361.027US2 : FROM RECORD
:

This is a decision on the Request to Withdraw as attorney or agent of record under 37 C.F.R. § 1.36(b), filed January 10, 2007.

The request is **NOT APPROVED** as moot.

A review of the file record indicates that the power of attorney to SCHWEGMAN LUNDBERG WOESSNER & KLUTH PA has been revoked by the assignee of the patent application on January 22, 2007. Accordingly, the request to withdraw under 37 C.F.R. § 1.36(b) is moot.

All future communications from the Office will continue to be directed to the below-listed address until otherwise notified by applicant.

Telephone inquires concerning this decision should be directed to the undersigned at 571-272-7253.

Monica A. Graves
Petitions Examiner
Office of Petitions

cc: **THE SCRIPPS RESEARCH INSTITUTE**
OFFICE OF PATENT COUNSEL, TPC-8
10550 NORTH TORREY PINES ROAD
LA JOLLA, CA 92037

UNITED STATES PATENT AND TRADEMARK OFFICE

Commissioner for Patents
United States Patent and Trademark Office
P.O. Box 1450
Alexandria, VA 22313-1450
www.uspto.gov

14 JUL 2006

Michele M. Simkin
Foley & Lardner, LLP
3000 K Street, Suite 500
Washington, DC 20007

In re Application of	:	
JIANG, et al.	:	
Application No.: 10/534,579	:	
PCT No.: PCT/US03/35946	:	DECISION ON PETITION
Int. Filing Date: 10 November 2003	:	
Priority Date: 13 November 2002	:	UNDER 37 CFR 1.47(a)
Atty. Docket No.: 039386-2266	:	
For: LIPID-ASSOCIATED MOLECULES	:	

This decision is in response to the applicant's "PETITION UNDER 37 C.F.R. § 1.47(a)" filed 27 April 2006 in the United States Patent and Trademark Office (USPTO). As authorized the $200.00 petition fee will be deducted from deposit account 19-0741.

BACKGROUND

On 10 November 2003, applicant filed international application PCT/US03/35946 which claimed priority to an earlier U.S. application filed 13 November 2002. Pursuant to 37 CFR 1.495, the thirty-month period for paying the basic national fee in the United States was set to expire at midnight on 13 May 2005.

On 11 May 2005, applicant filed a transmittal letter for entry into the national stage in the United States which was accompanied by the requisite basic national fee as required by 35 U.S.C. 371(c)(1); a First preliminary amendment and an Application Data Sheet.

On 27 February 2006, applicant was mailed a "Notification of Missing Requirements" (Form PCT/DO/EO/905) informing applicant that an executed oath or declaration of the inventors in compliance with 37 CFR 1.497(a)-(b) was required. Applicant was afforded two months to file the required response and advised that this period could be extended pursuant to 37 CFR 1.136(a).

On 27 April 2006, applicant filed the present petition under 37 CFR 1.47(a) to accept the filed declaration without the signature of joint inventors Xin Jiang, Hsin-Ru Chang and Kimberely J. Gietzen.

DISCUSSION

A petition under 37 CFR 1.47(a) must be accompanied by (1) the fee under 37 CFR 1.17(i), (2) factual proof that the missing joint investor refuses to execute the application or cannot be reached after diligent effort, (3) a statement of the last known address of the missing inventor, and (4) an oath or declaration by each 37 CFR 1.47(a) applicant on his or her own behalf and on behalf of the non-signing joint inventor. With the filing of the present petition and accompanying papers, applicant has satisfied items 1 and 3.

Regarding inventor Hsin-Ru Chang, applicant has also satisfied item 2 in that applicant has provided a first-hand account (declaration of Ms. Christine Arthur) of the nonsigning inventor's confirmation of delivery of a complete set of the application papers and an express refusal to execute the declaration. Therefore, it is proper to grant the petition as to Hsin-Ru Chang.

As to item (2) and inventors Jiang and Gietzen, Section 409.03(d) of the Manual of Patent Examining Procedure (MPEP) states, in part: Where inability to find or reach a nonsigning inventor "after diligent effort" is the reason for filing under 37 CFR 1.47, a statement of facts should be submitted that fully describes the exact facts which are relied on to establish that a diligent effort was made.

> The fact that a nonsigning inventor is on vacation or out of town and is therefore temporarily unavailable to sign the declaration is not an acceptable reason for filing under 37 CFR 1.47... The statement of facts must be signed, where at all possible, by a person having firsthand knowledge of the facts recited therein. Statements based on hearsay will not normally be accepted. Copies of documentary evidence such as Internet searches, certified mail return receipts, cover letters of instructions, telegrams, that support a finding that the nonsigning inventor could not be found or reached should be made part of the statement. The steps taken to locate the whereabouts of the nonsigning inventor should include a statement of facts. It is important that the statement contain facts as opposed to conclusions.

While applicant has included Federal Express tracking information for packages mailed to inventors Jiang and Gietzen, these sheets do not contain any receipt signature information. Thus, it is not possible to take the inventors' subsequent silence as a refusal to cooperate. Applicant states that directory assistance did not have a listing for these inventors at their last known addresses. However, it does not appear that any additional searching was performed to locate current contact information as listed above.

Regarding item (4), the filed declaration executed by inventor Murage is defective and is insufficient to satisfy the oath or declarations requirement of 35 CFR 371(c)(4) for entry into the

national stage in the United States of America. Specifically, the declaration submitted includes an alteration that has not been initialed and dated by inventor Murage. (See MPEP §605.04(a) and 37 CFR 1.52(c)). The published international application and filed application data sheet list the inventor's first name as "Jagi" while the declaration executed by the inventor has been altered and the first name spelled as "Jaji."

For the reasons stated above, it is not possible to grant applicant's petition at this time.

CONCLUSION

For the reasons stated above, applicant's petition under 37 CFR 1.47(a) is **DISMISSED without prejudice**.

Any reconsideration on the merits of this petition must be filed within **TWO (2) MONTHS** from the mail date of this decision. Any reconsideration request should include a cover letter entitled "Renewed Petition Under 37 CFR 1.47(a)" Extensions of time may be obtained under 37 CFR 1.136(a).

Any further correspondence with respect to this matter should be directed to Mail Stop PCT, Commissioner for Patents, Office of PCT Legal Administration, P.O. Box 1450, Alexandria, Virginia 22313-1450, with the contents of the letter marked to the attention of the Office of PCT Legal Administration.

Derek A. Putonen
Attorney Advisor
Office of PCT Legal Administration
Tel: (571) 272-3294
Fax: (571) 273-0459

UNITED STATES PATENT AND TRADEMARK OFFICE

Commissioner for Patents
United States Patent and Trademark Office
P.O. Box 1450
Alexandria, VA 22313-1450
www.uspto.gov

05 DEC 2006

Michele M. Simkin
Foley & Lardner, LLP
3000 K Street, Suite 500
Washington, DC 20007

In re Application of	:	
JIANG, et al.	:	DECISION ON RENEWED
Application No.: 10/534,579	:	
PCT No.: PCT/US03/35946	:	PETITION UNDER
Int. Filing Date: 10 November 2003	:	
Priority Date: 13 November 2002	:	37 CFR 1.47(a)
Atty. Docket No.: 039386-2266	:	
For: LIPID-ASSOCIATED MOLECULES	:	

This decision is in response to the applicant's "RENEWED PETITION UNDER 37 C.F.R. § 1.47(a)" filed 14 November 2006 in the United States Patent and Trademark Office (USPTO).

BACKGROUND

On 14 July 2006, applicant was mailed a decision dismissing applicant's petition under 37 CFR 1.47(a) to accept the application without the signatures of joint inventors Xin Jiang, Hsin-Ru Chang and Kimberely J. Gietzen. Applicant was afforded two months to file any request for reconsideration and advised that this period could be extended pursuant to 37 CF^ 1.136(a).

On 14 November 2006, applicant filed the present renewed petition accompanied by a petition for a two-month extension of time and payment of the appropriate extension of time fee, a declaration executed by the one of the previously non-signing inventors, Xin Jiang and a declaration executed by inventor Jaji Murage where the inventor has dated and initialed a change made to the declaration.

DISCUSSION

As detailed in the decision mailed 14 July 2006, a petition under 37 CFR 1.47(a) must be accompanied by (1) the fee under 37 CFR 1.17(g), (2) factual proof that the missing joint investor refuses to execute the application or cannot be reached after diligent effort, (3) a statement of the last known address of the missing inventor, and (4) an oath or declaration by each 37 CFR 1.47(a) applicant on his or her own behalf and on behalf of the non-signing joint inventor. With the filing of the present petition and accompanying paperwork applicant has satisfied all of the items of concern from the decision mailed 14 July 2006.

For the reasons stated above, it is proper to grant applicant's renewed petition at this time.

CONCLUSION

For the reasons above, applicant's petition under 37 CFR 1.47(a) is **GRANTED**.

The application has an international filing date of 10 November 2003 under 35 U.S.C. 363, and will be given a date of **14 November 2006** under 35 U.S.C. 371 (c).

As provided in 37 CFR 1.47(c), a notice of the filing of this application will be forwarded to the non-signing inventors at their last known addresses of record.

A notice of the filing of the application under 37 CFR 1.47(a) will be published in the Official Gazette.

This application is being returned to the DO/EO/US for processing in accordance with this decision. Specifically, the mailing of a Notification of Acceptance (Form PCT/DO/EO/903).

Derek A. Putonen
Attorney Advisor
Office of PCT Legal Administration
Tel: (571) 272-3294
Fax: (571) 273-0459

UNITED STATES PATENT AND TRADEMARK OFFICE

Commissioner for Patents
United States Patent and Trademark Office
P.O. Box 1450
Alexandria, VA 22313-1450
www.uspto.gov

06 JUL 2006

JONES DAY
222 EAST 41ST ST
NEW YORK NY 10017

In re Application of	:	
HONG et al.	:	DECISION ON
Application No.: 10/534,589	:	
PCT No.: PCT/KR2003/001069	:	PAPERS
Int. Filing Date: 30 May 2003	:	
Priority Date: 07 November 2002	:	UNDER 37 CFR 1.42
Attorney's Docket No.: 11281-068-999	:	
For: METHOD FOR MANUFACTURING AN	:	
OPTICAL FIBER PREFORM BY MCVD	:	

This is a decision on applicants' submission filed in the United States Patent and Trademark Office (USPTO) on 22 March 2006, which was accompanied by a declaration of inventors. The indication in this declaration that inventor Hong is deceased has been treated as a request for status under 37 CFR 1.42.

BACKGROUND

On 30 May 2003, applicants filed international application PCT/KR2003/001069, which designated the United States and claimed a priority date of 07 November 2002. A copy of the international application was communicated to the United States Patent and Trademark Office (USPTO) from the International Bureau on 21 May 2004. The thirty-month period for paying the basic national fee in the United States expired at midnight on 09 May 2005 (07 May 2005 being a Saturday).

On 09 May 2005, applicants filed a transmittal letter for entry into the national stage in the United States accompanied by, *inter alia*, the basic national fee and a declaration of inventors.

On 01 February 2006, the United States Patent and Trademark Office (USPTO) mailed a NOTIFICATION OF MISSING REQUIREMENTS UNDER 35 U.S.C. 371 IN THE U.S. DESIGNATED/ELECTED OFFICE (DO/EO/US) (Form PCT/DO/EO/905) indicating, *inter alia*, that an oath or declaration of the inventor in compliance with 37 CFR 1.497(a)-(b) and the surcharge for providing the oath or declaration later than thirty months from the priority date were required. The NOTIFICATION set a two-month extendable time period for reply.

On 22 March 2006, applicant filed the instant submission, which was accompanied by a

declaration of the inventors and the surcharge under 37 CFR 1.492(h). The indication in this declaration that inventor Hong is deceased has been treated as a request for status under 37 CFR 1.42.

DISCUSSION

The submission filed 22 March 2006 has been reviewed and has been found in compliance with 37 CFR 1.42. The declaration filed 22 March 2006 is in compliance with 37 CFR 1.497(a)-(b).

CONCLUSION

For the above reasons, the request for status under 37 CFR 1.42 is **ACCEPTED**.

This application is being forwarded to the National Stage Processing Branch of the Office of PCT Operations to continue national stage processing of the application in accordance with this decision.

Daniel Stemmer
Legal Examiner
PCT Legal Affairs
Office of Patent Cooperation Treaty
Legal Administration
Telephone: (571) 272-3301
Facsimile: (571) 273-0459

UNITED STATES PATENT AND TRADEMARK OFFICE

UNITED STATES DEPARTMENT OF COMMERCE
United States Patent and Trademark Office
Address: COMMISSIONER FOR PATENTS
P.O. Box 1450
Alexandria, Virginia 22313-1450
www.uspto.gov

CURATOLO SIDOTI CO., LPA
24500 CENTER RIDGE ROAD, SUITE 280
CLEVELAND, OH 44145

Mail Date: 04/21/2010

Applicant	: Klaus Lorenz	: DECISION ON REQUEST FOR
Patent Number	: 7662882	: RECALCULATION of PATENT
Issue Date	: 02/16/2010	: TERM ADJUSTMENT IN VIEW
Appliction No	: 10/534,606	: OF WYETH AND NOTICE OF INTENT TO
Filed	: 02/22/2006	: ISSUE CERTIFICATE OF CORRECTION
		:

The Request for Recalculation is **GRANTED** to the extent indicated.

The patent term adjustment has been determined to be **1031** days. The USPTO will *sua sponte* issue a certificate of correction reflecting the amount of PTA days determined by the recalculation.

Prior to the issuance of the certificate of correction, the USPTO will afford patentee an opportunity to be heard and request reconsideration. Accordingly, patentee has **one month or thirty (30) days**, whichever is longer, to file a request for reconsideration of this patent term adjustment calculation. See 35 U.S.C. 154(b)(3)(B)(ii) and 37 CFR 1.322(a)(4). No extensions of time will be granted under 37 CFR 1.136.

Patentee should use document code PET.OP if electronically filing a request for reconsideration of this patent term adjustment calculation. The patentee must also include the information required by 37 CFR 1.705(b)(2) and the fee required by 37 CFR 1.18(e). If patentee does not file a timely request for reconsideration of this patent term adjustment calculation including the information required by 37 CFR 1.705(b)(2) and the fee required by 37 CFR 1.18(e), the USPTO will issue a certificate of correction reflecting the PTA determination noted above.

Patentee should be aware that in order to preserve the right to review in the United States District Court for the District of Columbia of the USPTO patent term adjustment determination, patentee must ensure that he or she also take the steps required under 35 U.S.C. 154(b)(4)(A) in a timely manner. Nothing in the request for recalculation should be construed as providing an alternative time frame for commencing a civil action under 35 U.S.C. 154(b)(4)(A).

Any questions concerning this decision should be directed to the Office of Patent Legal Administration at 571-272-7702.

UNITED STATES PATENT AND TRADEMARK OFFICE

UNITED STATES DEPARTMENT OF COMMERCE
United States Patent and Trademark Office
Address: COMMISSIONER FOR PATENTS
P.O. Box 1450
Alexandria, Virginia 22313-1450
www.uspto.gov

SNELL & WILMER LLP (OC)
600 ANTON BOULEVARD
SUITE 1400
COSTA MESA, CA 92626

Mail Date: 04/21/2010

Applicant	: Kenji Yoneda	: DECISION ON REQUEST FOR
Patent Number	: 7643746	: RECALCULATION of PATENT
Issue Date	: 01/05/2010	: TERM ADJUSTMENT IN VIEW
Appliction No	: 10/534,613	: OF WYETH AND NOTICE OF INTENT TO
Filed	: 05/11/2005	: ISSUE CERTIFICATE OF CORRECTION
		:

The Request for Recalculation is **GRANTED** to the extent indicated.

The patent term adjustment has been determined to be **1271** days. The USPTO will *sua sponte* issue a certificate of correction reflecting the amount of PTA days determined by the recalculation.

Prior to the issuance of the certificate of correction, the USPTO will afford patentee an opportunity to be heard and request reconsideration. Accordingly, patentee has **one month or thirty (30) days**, whichever is longer, to file a request for reconsideration of this patent term adjustment calculation. See 35 U.S.C. 154(b)(3)(B)(ii) and 37 CFR 1.322(a)(4). No extensions of time will be granted under 37 CFR 1.136.

Patentee should use document code PET.OP if electronically filing a request for reconsideration of this patent term adjustment calculation. The patentee must also include the information required by 37 CFR 1.705(b)(2) and the fee required by 37 CFR 1.18(e). If patentee does not file a timely request for reconsideration of this patent term adjustment calculation including the information required by 37 CFR 1.705(b)(2) and the fee required by 37 CFR 1.18(e), the USPTO will issue a certificate of correction reflecting the PTA determination noted above.

Patentee should be aware that in order to preserve the right to review in the United States District Court for the District of Columbia of the USPTO patent term adjustment determination, patentee must ensure that he or she also take the steps required under 35 U.S.C. 154(b)(4)(A) in a timely manner. Nothing in the request for recalculation should be construed as providing an alternative time frame for commencing a civil action under 35 U.S.C. 154(b)(4)(A).

Any questions concerning this decision should be directed to the Office of Patent Legal Administration at 571-272-7702.

UNITED STATES PATENT AND TRADEMARK OFFICE

Commissioner for Patents
United States Patent and Trademark Office
P.O. Box 1450
Alexandria, VA 22313-1450
www.uspto.gov

QUARLES & BRADY LLP
ONE SOUTH CHURCH AVENUE,
SUITE 1700
TUCSON AZ 85701-1621

MAILED

JUL 08 2009

OFFICE OF PETITIONS

In re Application of	:	
Michael W. Marcellin et al	:	
Application No. 10/534,620	:	ON PETITION
Filed: May 11, 2005	:	
Attorney Docket No. 122170.00002US	:	

This is a decision on the petition under 37 CFR 1.313(a), filed July 6, 2009, to withdraw the above-identified application from issue.

The petition is **DISMISSED**.

Petitioner requests that the present application be withdrawn from issue for consideration of an IDS filed on July 6, 2009.

37 CFR 1.313(a) states, in part:

> Applications may be withdrawn from issue for further action at the initiative of the Office or upon petition by the applicant. To request that the Office withdraw an application from issue, applicant must file a petition under this section including the fee set forth in § 1.17(h) and a showing of good and sufficient reasons why withdrawal of the application from issue is necessary.

As such, a grantable petition requesting withdrawal of an application from issue must be accompanied by: (1) a showing of good and sufficient reasons why withdrawal of the application from issue is necessary; and (2) the requisite petition fee under 37 CFR 1.17(h). The petition fee of $130.00 has been charged to petitioner's deposit account.

However, the petition does not set forth good and sufficient reasons as to why withdrawal of the application from issue is necessary. The mere submission of an IDS with the petition does not make withdrawal of the application from issue necessary. There are other avenues open to applicant to have an IDS considered other than by way of petition.

Following the part of 37 CFR 1.313(a) cited above, 37 CFR 1.313(a) goes on to state:

> A petition under this section is not required if a request for continued examination under § 1.114 is filed prior to payment of the issue fee.

The filing of a request for continued examination (RCE) under 37 CFR 1.114 with a submission and the fee set forth in 37 CFR 1.17(e) would have been a proper available option to have the IDS considered. It is well documented that an IDS satisfies the submission requirement under 37 CFR 1.114. *See* MPEP 706.07(h)(II).

Further correspondence with respect to this matter should be delivered through one of the following mediums:

By mail:	Mail Stop PETITIONS Commissioner for Patents Post Office Box 1450 Alexandria, VA 22313-1450
By hand:	Customer Service Window Mail Stop Petitions Randolph Building 401 Dulany Street Alexandria, VA 22314
By fax:	(571) 273-8300 ATTN: Office of Petitions
By internet:	EFS-Web www.uspto.gov/ebc/efs_help.html (for help using EFS-Web call the Patent Electronic Business Center at (866) 217-9197)

Any questions concerning this matter may be directed to the undersigned at (571) 272-3208.

/Karen Creasy/
Karen Creasy
Petitions Examiner
Office of Petitions

UNITED STATES PATENT AND TRADEMARK OFFICE

UNITED STATES DEPARTMENT OF COMMERCE
United States Patent and Trademark Office
Address: COMMISSIONER FOR PATENTS
P.O. Box 1450
Alexandria, Virginia 22313-1450
www.uspto.gov

QUARLES & BRADY LLP
ONE SOUTH CHURCH AVENUE, SUITE 1700
TUCSON, AZ 85701-1621

Mail Date: 04/20/2010

Applicant	: Michael W Marcellin	: DECISION ON REQUEST FOR
Patent Number	: 7580582	: RECALCULATION of PATENT
Issue Date	: 08/25/2009	: TERM ADJUSTMENT IN VIEW
Appliction No	: 10/534,620	: OF WYETH AND NOTICE OF INTENT TO
Filed	: 05/11/2005	: ISSUE CERTIFICATE OF CORRECTION
		:

The Request for Recalculation is **GRANTED** to the extent indicated.

The patent term adjustment has been determined to be **1004** days. The USPTO will *sua sponte* issue a certificate of correction reflecting the amount of PTA days determined by the recalculation.

Prior to the issuance of the certificate of correction, the USPTO will afford patentee an opportunity to be heard and request reconsideration. Accordingly, patentee has **one month or thirty (30) days**, whichever is longer, to file a request for reconsideration of this patent term adjustment calculation. See 35 U.S.C. 154(b)(3)(B)(ii) and 37 CFR 1.322(a)(4). No extensions of time will be granted under 37 CFR 1.136.

Patentee should use document code PET.OP if electronically filing a request for reconsideration of this patent term adjustment calculation. The patentee must also include the information required by 37 CFR 1.705(b)(2) and the fee required by 37 CFR 1.18(e). If patentee does not file a timely request for reconsideration of this patent term adjustment calculation including the information required by 37 CFR 1.705(b)(2) and the fee required by 37 CFR 1.18(e), the USPTO will issue a certificate of correction reflecting the PTA determination noted above.

Patentee should be aware that in order to preserve the right to review in the United States District Court for the District of Columbia of the USPTO patent term adjustment determination, patentee must ensure that he or she also take the steps required under 35 U.S.C. 154(b)(4)(A) in a timely manner. Nothing in the request for recalculation should be construed as providing an alternative time frame for commencing a civil action under 35 U.S.C. 154(b)(4)(A).

Any questions concerning this decision should be directed to the Office of Patent Legal Administration at 571-272-7702.

UNITED STATES PATENT AND TRADEMARK OFFICE

UNITED STATES DEPARTMENT OF COMMERCE
United States Patent and Trademark Office
Address: COMMISSIONER FOR PATENTS
P.O. Box 1450
Alexandria, Virginia 22313-1450
www.uspto.gov

QUARLES & BRADY LLP
ONE SOUTH CHURCH AVENUE, SUITE 1700
TUCSON, AZ 85701-1621

Mail Date: 05/17/2010

Applicant : Michael W Marcellin
Patent Number : 7580582
Issue Date : 08/25/2009
Application No : 10/534,620
Filed : 05/11/2005

: NOTICE CONCERNING IMPROPER
: CALCULATION OF PATENT TERM
: ADJUSTMENT BASED UPON USPTO
: IMPROPERLY MEASURING REDUCTION
: PERIOD UNDER 37 CFR 1.704(c)(10).

The United States Patent and Trademark Office (USPTO) discovered that in processing the recent recalculation decisions mailed in response to patentee's filed Request for Recalculation of Patent Term Adjustment in view of Wyeth, the USPTO improperly measured the reduction period for reductions under 37 CFR 1.704(c)(10). Pursuant to 37 CFR 1.704(c)(10), patentee's reduction begins on the date of filing the amendment under 37 CFR 1.312 ("1.312 amendment") or other related paper and ends on the date that the Office mails a response to the filing of the 1.312 amendment or other paper. It has been discovered that during the recalculation, the calculation failed to the limit the reduction to the mail date of the response to the 1.312 amendment or other paper. Accordingly, patentee's reductions were greater than warranted.

This notice **VACATES** the previous GRANTED request for recalculation and provides patentee with a revised GRANTED recalculation.

The patent term adjustment has been determined to be **1047** days. The USPTO will *sua sponte* issue a certificate of correction reflecting the amount of patent term adjustment (PTA) days determined by the recalculation.

Prior to the issuance of the certificate of correction, the USPTO will afford patentee an opportunity to be heard and request reconsideration. Accordingly, patentee has **one month or thirty (30) days** from the mail date of this notice, whichever is longer, to file a request for reconsideration of this PTA calculation. See 35 U.S.C. § 154(b)(3)(B)(ii) and 37 CFR 1.322(a)(4).

Patentee should use document code PET.OP if electronically filing a request for reconsideration of this PTA calculation. The patentee must also include the information required by 37 CFR 1.705(b)(2), and the fee required by 37 CFR 1.18(e). If patentee does not file a timely request for reconsideration of this PTA calculation, including the information required by 37 CFR 1.705(b)(2) and the fee required by 37 CFR 1.18(e), the USPTO will issue a certificate of correction reflecting the PTA determination noted above.

Patentee should be aware that in order to preserve the right of review of the USPTO's PTA determination in the United States District Court for the District of Columbia, patentee must ensure that the steps required under 35 U.S.C. § 154 (b)(4) are taken in a timely manner. Nothing in the request for recalculation should be construed as providing an alternative time frame for commencing a civil action under 35 U.S.C. § 154(b)(4).

UNITED STATES PATENT AND TRADEMARK OFFICE

UNITED STATES DEPARTMENT OF COMMERCE
United States Patent and Trademark Office
Address: COMMISSIONER FOR PATENTS
P.O. Box 1450
Alexandria, Virginia 22313-1450
www.uspto.gov

PEARNE & GORDON LLP
1801 EAST 9TH STREET
SUITE 1200
CLEVELAND, OH 44114-3108

Mail Date: 04/20/2010

Applicant	: Tatsuya Ikeda	: DECISION ON REQUEST FOR
Patent Number	: 7627396	: RECALCULATION of PATENT
Issue Date	: 12/01/2009	: TERM ADJUSTMENT IN VIEW
Appliction No	: 10/534,669	: OF WYETH AND NOTICE OF INTENT TO
Filed	: 05/11/2005	: ISSUE CERTIFICATE OF CORRECTION
		:

The Request for Recalculation is **GRANTED** to the extent indicated.

The patent term adjustment has been determined to be **1031** days. The USPTO will *sua sponte* issue a certificate of correction reflecting the amount of PTA days determined by the recalculation.

Prior to the issuance of the certificate of correction, the USPTO will afford patentee an opportunity to be heard and request reconsideration. Accordingly, patentee has **one month or thirty (30) days**, whichever is longer, to file a request for reconsideration of this patent term adjustment calculation. See 35 U.S.C. 154(b)(3)(B)(ii) and 37 CFR 1.322(a)(4). No extensions of time will be granted under 37 CFR 1.136.

Patentee should use document code PET.OP if electronically filing a request for reconsideration of this patent term adjustment calculation. The patentee must also include the information required by 37 CFR 1.705(b)(2) and the fee required by 37 CFR 1.18(e). If patentee does not file a timely request for reconsideration of this patent term adjustment calculation including the information required by 37 CFR 1.705(b)(2) and the fee required by 37 CFR 1.18(e), the USPTO will issue a certificate of correction reflecting the PTA determination noted above.

Patentee should be aware that in order to preserve the right to review in the United States District Court for the District of Columbia of the USPTO patent term adjustment determination, patentee must ensure that he or she also take the steps required under 35 U.S.C. 154(b)(4)(A) in a timely manner. Nothing in the request for recalculation should be construed as providing an alternative time frame for commencing a civil action under 35 U.S.C. 154(b)(4)(A).

Any questions concerning this decision should be directed to the Office of Patent Legal Administration at 571-272-7702.

UNITED STATES PATENT AND TRADEMARK OFFICE

UNITED STATES DEPARTMENT OF COMMERCE
United States Patent and Trademark Office
Address: COMMISSIONER FOR PATENTS
P.O. Box 1450
Alexandria, Virginia 22313-1450
www.uspto.gov

PEARNE & GORDON LLP
1801 EAST 9TH STREET
SUITE 1200
CLEVELAND, OH 44114-3108

Mail Date: 05/17/2010

Applicant : Tatsuya Ikeda
Patent Number : 7627396
Issue Date : 12/01/2009
Application No : 10/534,669
Filed : 05/11/2005

: NOTICE CONCERNING IMPROPER
: CALCULATION OF PATENT TERM
: ADJUSTMENT BASED UPON USPTO
: IMPROPERLY MEASURING REDUCTION
: PERIOD UNDER 37 CFR 1.704(c)(10).

The United States Patent and Trademark Office (USPTO) discovered that in processing the recent recalculation decisions mailed in response to patentee's filed Request for Recalculation of Patent Term Adjustment in view of Wyeth, the USPTO improperly measured the reduction period for reductions under 37 CFR 1.704(c)(10). Pursuant to 37 CFR 1.704(c)(10), patentee's reduction begins on the date of filing the amendment under 37 CFR 1.312 ("1.312 amendment") or other related paper and ends on the date that the Office mails a response to the filing of the 1.312 amendment or other paper. It has been discovered that during the recalculation, the calculation failed to the limit the reduction to the mail date of the response to the 1.312 amendment or other paper. Accordingly, patentee's reductions were greater than warranted.

This notice **VACATES** the previous GRANTED request for recalculation and provides patentee with a revised GRANTED recalculation.

The patent term adjustment has been determined to be **1049** days. The USPTO will *sua sponte* issue a certificate of correction reflecting the amount of patent term adjustment (PTA) days determined by the recalculation.

Prior to the issuance of the certificate of correction, the USPTO will afford patentee an opportunity to be heard and request reconsideration. Accordingly, patentee has **one month or thirty (30) days** from the mail date of this notice, whichever is longer, to file a request for reconsideration of this PTA calculation. See 35 U.S.C. § 154(b)(3)(B)(ii) and 37 CFR 1.322(a)(4).

Patentee should use document code PET.OP if electronically filing a request for reconsideration of this PTA calculation. The patentee must also include the information required by 37 CFR 1.705(b)(2), and the fee required by 37 CFR 1.18(e). If patentee does not file a timely request for reconsideration of this PTA calculation, including the information required by 37 CFR 1.705(b)(2) and the fee required by 37 CFR 1.18(e), the USPTO will issue a certificate of correction reflecting the PTA determination noted above.

Patentee should be aware that in order to preserve the right of review of the USPTO's PTA determination in the United States District Court for the District of Columbia, patentee must ensure that the steps required under 35 U.S.C. § 154 (b)(4) are taken in a timely manner. Nothing in the request for recalculation should be construed as providing an alternative time frame for commencing a civil action under 35 U.S.C. § 154(b)(4).

#7

UNITED STATES PATENT AND TRADEMARK OFFICE

Commissioner for Patents
United States Patent and Trademark Office
P.O. Box 1450
Alexandria, VA 22313-1450
www.uspto.gov

15 AUG 2006

MERCHANT & GOULD PC
P.O. BOX 2903
MINNEAPOLIS MN 55402-0903

In re Application of	:	
BARBERO et al.	:	
Application No.: 10/534,673	:	DECISION
PCT No.: PCT/IB03/01427	:	
Int. Filing Date: 04 April 2003	:	
Priority Date: 11 November 2002	:	
Attorney Docket No.: 09728.0324USWO	:	
For: SINGLE VALUE INTAKE/EXHAUST	:	
FOR A DIRECT INJECTION INTERNAL	:	
COMBUSTION ENGINE	:	

This is a decision on applicants' petition under 37 CFR 1.47(a) filed 22 March 2006 in the United States Patent and Trademark Office (USPTO). Petitioner's request for a four month extension of time is granted.

BACKGROUND

On 11 May 2005, applicants filed a submission for entry into the national stage in the United States which was accompanied by, *inter alia*, the U.S. Basic National Fee.

On 22 September 2005, the United States Designated/Elected Office (DO/EO/US) mailed a NOTIFICATION OF MISSING REQUIREMENTS UNDER 35 U.S.C. 371 (Form PCT/DO/EO/905) indicating, *inter alia*, that an oath or declaration of the inventors in compliance with 37 CFR 1.497(a)-(b) was required. The NOTIFICATION set a two-month extendable period for response.

On 22 March 2006, applicants filed the instant petition under 37 CFR 1.47(a) which was accompanied by, *inter alia*, a declaration of inventors, the surcharge under 37 CFR 1.492(e), a statement of facts by the joint inventors, a declaration of the nonsigning inventor and a request for a four month extension of time.

DISCUSSION

A petition under 37 CFR 1.47(a) must be accompanied by: (1) the fee under 37 CFR 1.17(h); (2) factual proof that the missing joint inventor refuses to execute the application or cannot be reached after diligent effort; (3) a statement of the last known address of the missing inventor; and (4) an oath or declaration by each 37 CFR 1.47(a) applicant on his or her own

behalf and on behalf of the non-signing joint inventor.

As to item (1), the petition fee of $200 under 27 CFR 1.17(g) has been paid. Thus, item (1) has been satisfied. Item (3) has been satisfied with the non-signing inventor's last known address.

Item (2) has been satisfied with the signed declaration of the non-signing inventor, Teresa Felaco, who states that "she does not want to sign neither the Inventor's Declaration, nor the Power of Attorney form, nor any other document concerning the grant procedure related to the above mentioned US Patent Application". This is sufficient evidence to demonstrate that the non-signing inventor refuses to sign the application, satisfying Item (2) above.

Item (4) has been satisfied with the submission of the declaration identifying all of the inventors and their respective citizenship, residency and mailing addresses in compliance with 37 CFR 1.497(a) and (b) and executed by the joint inventors on their behalf and on behalf of the non-signing inventor.

Items (1) through (4) have been satisfied and thus, the petition under 37 CFR 1.47(a) is granted.

CONCLUSION

The petition under 37 CFR §1.47(a) is **GRANTED**.

The U.S. Designated/Elected Office is authorized to accept the application as a 37 CFR 1.47(a) application using the declaration filed 22 March 2006. The application has an international filing date of 04 April 2003 under 35 U.S.C. 363, and a date of 22 March 2006 under 35 U.S.C. 371(c)(1), (c)(2) and (c)(4).

As provided in 37 CFR 1.47(a), a notice of the filing of this application will be forwarded to the non-signing inventors at their respective last known address of record. Also, a notice of the filing of this application will be published in the Official Gazette.

Cynthia M. Kratz
Attorney Advisor
PCT Legal Affairs
Office of Patent Cooperation Treaty
Legal Administration
Telephone: (571) 272-3286
Facsimile: (571) 273-0459

UNITED STATES PATENT AND TRADEMARK OFFICE

Commissioner for Patents
United States Patent and Trademark Office
P.O. Box 1450
Alexandria, VA 22313-1450
www.uspto.gov

15 AUG 2006

TERESA FELACO
VIA VARCATURIELLO 12
I-80014 GIUGLIANO
LAGO PATRIA
NAPOLI
ITALY

In re Application of BARBERO et al. Application No.: 10/534,673 PCT No.: PCT/IB03/01427 Int. Filing Date: 04 April 2003 Priority Date: 11 November 2002 Attorney Docket No.: 09728.0324USWO For: SINGLE VALUE INTAKE/EXHAUST FOR A DIRECT INJECTION INTERNAL COMBUSTION ENGINE	DECISION

Dear Ms. Felaco:

You are named as an inventor in the above identified United States patent application, filed under the provisions of 37 CFR 1.47(a) and 35 U.S.C. § 116. Should a patent be granted, you will be designated as an inventor.

As a named inventor, you are entitled to inspect any paper in the file wrapper of the application, order copies of all or any part thereof (at a prepaid cost per 37 CFR 1.19) or to make your position of record in the application. Alternatively, you may arrange to do any of the preceding through a registered patent agent or attorney presenting written authorization from you. If you care to join in the application, counsel of record (see below) would presumably assist you. Joining in the application would entail the filing of an appropriate oath or declaration by you pursuant to 37 CFR 1.63.

Cynthia M. Kratz
Attorney Advisor
PCT Legal Office

Telephone: (571)272 -3286

MERCHANT & GOULD PC
P.O. BOX 2903
MINNEAPOLIS MN 55402-0903

UNITED STATES PATENT AND TRADEMARK OFFICE

COMMISSIONER FOR PATENTS
UNITED STATES PATENT AND TRADEMARK OFFICE
P.O. BOX 1450
ALEXANDRIA, VA 22313-1450
www.uspto.gov

Paper No.

CLARK & ELBING LLP
101 FEDERAL STREET
BOSTON MA 02110

MAILED

JUL 08 2010

OFFICE OF PETITIONS

In re Patent No. 7,629,390	:	DECISION ON REQUEST
Nuyens et al.	:	FOR
Issue Date: December 8, 2009	:	RECONSIDERATION OF
Application No. 10/534,677	:	PATENT TERM ADJUSTMENT
Filed: July 25, 2005	:	and
Atty Docket No. 50304/077001	:	NOTICE OF INTENT TO ISSUE
	:	CERTIFICATE OF CORRECTION

This is a decision on the petition filed on February 8, 2010, which is being treated as a petition under 37 CFR 1.705(d) requesting that the patent term adjustment indicated on the above-identified patent be corrected to indicate that the term of the above-identified patent is extended or adjusted by one thousand and forty-eight (1048) days.

The petition to correct the patent term adjustment indicated on the above-identified patent is **GRANTED to the extent indicated herein**. The patent term adjustment is corrected to indicate that the term of the above-identified patent is extended or adjusted by **one thousand and forty-eight (1048)** days.

The "B" delay period is 571 days, not 501 days. Patentee calculated this period based on the date this application fulfilled the requirements of 35 U.S.C. 371, July 25, 2005. However, in an international application, this period is based on the failure of the Office to issue a patent within three years after the national stage commenced under 35 U.S.C. 371(b) or (f). See 1.702(b). In this instance, the national stage commencement date is Monday, May 16, 2005. The priority date of this application is November 14, 2002. As the requirements for early commencement were not met, the national stage commenced in

this application at the end of the thirty-month period. As the expiration of the 30-month period pursuant to 35 U.S.C. 371(b) fell on a Saturday, the period expired on the subsequent business day. See PCT Rule 80.5. Accordingly, the commencement date is Monday, May 16, 2005. Thus, "B" delay is 571 days, counting the number of days beginning on May 17, 2008 and ending on December 8, 2009, the date of issuance. See 1.703(b). Nonetheless, considering that the overlap is now 88 days (and not 18 days), the patent term adjustment is still increased by 483 days to 1048 days.

The Office acknowledges submission of the $200.00 fee set forth in 37 CFR 1.18(e). No additional fees are required.

The Office will *sua sponte* issue a certificate of correction. Pursuant to 37 CFR 1.322, the Office will not issue a certificate of correction without first providing assignee or patentee an opportunity to be heard. Accordingly, patentees are given **one (1) month or thirty (30) days**, whichever is longer, from the mail date of this decision to respond. No extensions of time will be granted under § 1.136.

The application is being forwarded to the Certificates of Branch for issuance of a certificate of correction. The Office will issue a certificate of correction indicating that the term of the above-identified patent is extended or adjusted by one thousand and forty-eight **(1048)** days.

Telephone inquiries specific to this matter should be directed to the undersigned at (571) 272-3219.

Nancy Johnson
Senior Petitions Attorney
Office of Petitions

Enclosure: Copy of DRAFT Certificate of Correction

UNITED STATES PATENT AND TRADEMARK OFFICE

CERTIFICATE OF CORRECTION

PATENT : 7,629,390 B2

DATED : **December 8, 2009** **DRAFT**

INVENTOR(S) : Nuyens et al.

It is certified that error appears in the above-identified patent and that said Letters Patent is hereby
corrected as shown below:

On the cover page,

[*] Notice: Subject to any disclaimer, the term of this patent is extended or adjusted under 35 USC 154(b) by 565 days

Delete the phrase "by 565 days" and insert – by 1048 days--

UNITED STATES PATENT AND TRADEMARK OFFICE

Commissioner for Patents
United States Patent and Trademark Office
P.O. Box 1450
Alexandria, VA 22313-1450
www.uspto.gov

Date : March 17, 2010

Patent No. :7641857
Inventor(s) :Wolfgang Clemens et al.
Issued :January 5, 2010
Title :MEASURING APPARTUS USED FOR DETERMIING AN ANALYTE IN A LIQUID
:SAMPLE COMPRISING POLYMER ELECTRONIC COMPONENTS

Re: Request for Certificate of Correction

Consideration has been given your request for the issuance of a certificate of correction for the above-identified patent under the provisions of 37 CFR 1.322 and/or 1.323.

Assignees' names and addresses (assignment data) printed in a patent are based *solely* on information supplied in the appropriate space for identifying the assignment data, i.e., item 3 of the Fee(s) Transmittal Form PTOL-85B. After payment of the issue fee, correction of assignment data submitted on the PTOL-85B can only be done by Certificate of Correction under 37 CFR 1.323, with a request under 37 CFR 3.81(b).

A request for a patent to be corrected to state the name of the assignee must:

A. state that the assignment was submitted for recordation as set forth in 37 CFR 3.11 before issuance of the patent;

B. include a request for a certificate of correction under 37 CFR 1.323 along with the fee set forth in 37 CFR 1.20(a); and

C. include the processing fee set forth in 37 CFR 1.17(i).

If the request is granted, Certificates of Correction Branch will be notified that a Certificate of Correction may be issued.

See Manual of Patent Examining Procedure, Section 1481.01 (Rev. 3) (Oct. 2005).

Applicant has not included items A and or C above, accordingly, the request for Certificate of Correction to add or change the assignee data is dismissed.

Any request under 37 CFR 3.81(b) should be directed to the following address or facsimile number:

By mail: Mail Stop PETITIONS
Commissioner for Patents
Post Office Box 1450
Alexandria, VA 22313-1450

By hand:	Customer Service Window Randolph Building 401 Dulany Street Alexandria, VA 22314
By fax:	571-273-8300 ATTN: Office of Petitions
EBC Filing:	E-mail to efs@uspto.gov Electronic Business Center 571-272-4100

Any inquiry concerning this communication should be directed to Ms. A. Green at (703) 308-9380 ext. 123.

Mary Diggs, Supervisor
Decisions & Certificates
of Correction Branch
(703) 308-9390 or (703) 308-

Attn: William Squire
Carella, Byrne, Cecchi, Olstein, Brody & Agnello
5 Becker Farm Road, Rosel.and, NJ 07068

/arg

UNITED STATES PATENT AND TRADEMARK OFFICE

UNITED STATES DEPARTMENT OF COMMERCE
United States Patent and Trademark Office
Address: COMMISSIONER FOR PATENTS
P.O. Box 1450
Alexandria, Virginia 22313-1450
www.uspto.gov

Carella Byrne Bain Gilfillan
5 Becker Farm Road
Roseland, NJ 07068

Mail Date: 04/21/2010

Applicant	: Wolfgang Clemens	: DECISION ON REQUEST FOR
Patent Number	: 7641857	: RECALCULATION of PATENT
Issue Date	: 01/05/2010	: TERM ADJUSTMENT IN VIEW
Appliction No	: 10/534,678	: OF WYETH AND NOTICE OF INTENT TO
Filed	: 11/10/2005	: ISSUE CERTIFICATE OF CORRECTION
		:

The Request for Recalculation is **GRANTED** to the extent indicated.

The patent term adjustment has been determined to be **1091** days. The USPTO will *sua sponte* issue a certificate of correction reflecting the amount of PTA days determined by the recalculation.

Prior to the issuance of the certificate of correction, the USPTO will afford patentee an opportunity to be heard and request reconsideration. Accordingly, patentee has **one month or thirty (30) days**, whichever is longer, to file a request for reconsideration of this patent term adjustment calculation. See 35 U.S.C. 154(b)(3)(B)(ii) and 37 CFR 1.322(a)(4). No extensions of time will be granted under 37 CFR 1.136.

Patentee should use document code PET.OP if electronically filing a request for reconsideration of this patent term adjustment calculation. The patentee must also include the information required by 37 CFR 1.705(b)(2) and the fee required by 37 CFR 1.18(e). If patentee does not file a timely request for reconsideration of this patent term adjustment calculation including the information required by 37 CFR 1.705(b)(2) and the fee required by 37 CFR 1.18(e), the USPTO will issue a certificate of correction reflecting the PTA determination noted above.

Patentee should be aware that in order to preserve the right to review in the United States District Court for the District of Columbia of the USPTO patent term adjustment determination, patentee must ensure that he or she also take the steps required under 35 U.S.C. 154(b)(4)(A) in a timely manner. Nothing in the request for recalculation should be construed as providing an alternative time frame for commencing a civil action under 35 U.S.C. 154(b)(4)(A).

Any questions concerning this decision should be directed to the Office of Patent Legal Administration at 571-272-7702.

UNITED STATES PATENT AND TRADEMARK OFFICE

Commissioner for Patents
United States Patent and Trademark Office
P.O. Box 1450
Alexandria, VA 22313-1450
www.uspto.gov

MAILED

APR 21 2010

OFFICE OF PETITIONS

WILMERHALE/BOSTON
60 STATE STREET
BOSTON MA 02109

In re Patent No. 7,557,229	:	DECISION ON REQUEST
Roy G. Gordon, et al.	:	FOR
Issue Date: July 7, 2009	:	RECONSIDERATION OF
Application No. 10/534,687	:	PATENT TERM ADJUSTMENT
Filed: May 12, 2005	:	AND
Atty Docket No. 42697.149 US3	:	NOTICE OF INTENT TO ISSUE
	:	CERTIFICATE OF CORRECTION

This is a decision on the petition filed on September 7, 2009, which is being treated as a petition under 37 CFR 1.705(d) requesting that the patent term adjustment indicated on the above-identified patent be corrected to indicate that the term of the above-identified patent is extended or adjusted by five hundred ninety-three (593) days.

The petition to correct the patent term adjustment indicated on the above-identified patent to indicate that the term of the above-identified patent is extended or adjusted by five hundred ninety-three (593) days[1] is **GRANTED to the extent indicated herein.**

---

[1] The "B" delay period is 393 days, not 157 days as patentees assert. Patentees calculated this period based on the date this application fulfilled the requirements of 35 U.S.C. 371. However, in an international application, this period is based on the failure of the Office to issue a patent within three years after the national stage commenced under 35 U.S.C. 371(b) or (f). See 1.702(b). The priority date of this application is November 15, 2002. As the expiration of the 30-month period pursuant to 35 U.S.C. 371(b) fell on a Sunday, the period expired on the subsequent business day. *See* PCT Rule 80.5. Accordingly, the national stage commenced in this application on Monday, May 16, 2005. Thus, "B" maximum delay is 417 days, counting the number of days beginning on May 17, 2008 and ending on July 7, 2009, the date of issuance. See 1.703(b). Taking the 24 days of overlap from May 17, 2008 to June 9, 2009 into consideration, the "B" delay is 393.

The Office will *sua sponte* issue a certificate of correction. Pursuant to 37 CFR 1.322, the Office will not issue a certificate of correction without first providing assignee or patentee an opportunity to be heard. Accordingly, patentees are given **one (1) month or thirty (30) days**, whichever is longer, from the mail date of this decision to respond. No extensions of time will be granted under 37 CFR 1.136. *See* 37 CFR 1.323(a)(4).

The Office acknowledges submission of the $200.00 fee set forth in 37 CFR 1.18(e). No additional fees are required.

The application is being forwarded to the Certificates of Correction Branch for issuance of a certificate of correction. The Office will issue a certificate of correction indicating that the term of the above-identified patent is extended or adjusted by **eight hundred twenty-nine (829)** days.

Telephone inquiries specific to this matter should be directed to the undersigned at (571) 272-3230.

Shirene Willis Brantley
Shirene Willis Brantley
Senior Petitions Attorney
Office of Petitions

Enclosure: Copy of DRAFT Certificate of Correction

UNITED STATES PATENT AND TRADEMARK OFFICE

CERTIFICATE OF CORRECTION

PATENT : 7,,557,229 B2

DATED : **July 7, 2009** **DRAFT**

INVENTOR(S) : Roy G. Gordon, et al.

It is certified that error appears in the above-identified patent and that said Letters Patent is hereby corrected as shown below:

On the cover page,

[*] Notice: Subject to any disclaimer, the term of this patent is extended or adjusted under 35 U.S.C. 154(b) by 436 days

Delete the phrase "by 436 days" and insert – by 829 days--

UNITED STATES PATENT AND TRADEMARK OFFICE

Commissioner for Patents
United States Patent and Trademark Office
P.O. Box 1450
Alexandria, VA 22313-1450
www.uspto.gov

MORGAN LEWIS & BOCKIUS LLP
1111 PENNSYLVANIA AVENUE NW
WASHINGTON DC 20004

In re Application of	:	
NOJO et al.	:	
Application No.: 10/534,699	:	DECISION
PCT No.: PCT/US2003/036618	:	
Int. Filing Date: 13 November 2003	:	
Priority Date: 13 November 2002	:	
Attorney's Docket No.: 063254-0233-US	:	
For: CHEMICAL MECHANICAL POLISHING	:	
COMPOSITION AND PROCESS	:	

This decision is in response to applicant's petition under 37 CFR 1.137(b) filed 04 November 2008 in the United States Patent and Trademark Office (USPTO).

BACKGROUND

On 13 November 2003, applicants filed international application PCT/US2003/036618, which designated the U.S. and claimed a priority date of 13 November 2002. A copy of the international application was communicated to the USPTO from the International Bureau on 27 May 2004. The thirty-month period for paying the basic national fee in the United States expired at midnight on 13 May 2005.

On 13 May 2005, applicants filed a submission for entry into the national stage in the United States which was accompanied by, *inter alia*, the U.S. Basic National Fee.

On 09 November 2007, the USPTO mailed a NOTIFICATION OF MISSING REQUIREMENTS UNDER 35 U.S.C. 371 (Form PCT/DO/EO/905) indicating, *inter alia*, that an oath or declaration of inventors in compliance with 37 CFR 1.497(a)-(b) was required.

On 13 August 2008, the USPTO mailed a NOTIFICATION OF ABANDONMENT

(Form PCT/DO/EO/909) indicating that the application was abandoned as to the United States for failure to respond to the NOTIFICATION OF MISSING REQUIREMENTS mailed 09 November 2007 within the time period set therein.

On 04 November 2008, applicants filed the instant petition under 37 CFR 1.137(b) which was accompanied by, *inter alia*, a declaration of inventors.

DISCUSSION

A petition to revive the present application under 37 CFR 1.137(b) must include:

(1) The required reply;
(2) The petition fee;
(3) A statement that the entire delay in filing the required reply from the due date for the reply until the filing of a grantable petition was unintentional.

Item (1) has not been satisfied. The declaration filed 04 November 2008 is an improper composite declaration, consisting of one page 1 and two page 2's. Each inventor must be presented with a complete declaration which lists all of the inventors, and the signature of each inventor must appear on at least one complete declaration. Multiple complete declarations may be submitted, but it is not permissible to combine pages of separate documents.

As to item (2), applicant submitted the petition fee on 04 November 2008. (As to the request for waiver of the fee for this petition, such a request must be accompanied by the petition fee set forth in 37 CFR 1.17(f).)

As to item (3), a grantable petition has not yet been provided.

CONCLUSION

For the reasons set forth above, the petition under 37 CFR 1.137(b) is **DISMISSED** without prejudice.

Applicant is hereby given the time limit of **TWO (2) MONTHS** from the mail date of this communication in order to file a proper response.

Failure to timely file a proper response to this decision in a timely manner will result in abandonment of the application with regards to national stage prosecution in the United States.

Any further correspondence with respect to this matter may be filed electronically via EFS-Web or if mailed should be addressed to Mail Stop PCT, Commissioner for Patents, Office of PCT Legal Administration, P.O. Box 1450, Alexandria, Virginia 22313-1450, with the contents of the letter marked to the attention of the Office of PCT Legal Administration.

/Daniel Stemmer/

Daniel Stemmer
Legal Examiner
PCT Legal Affairs
Office of Patent Cooperation Treaty
Legal Administration
Telephone: (571) 272-3301
Facsimile: (571) 273-0459

1 0 APR 2009

UNITED STATES PATENT AND TRADEMARK OFFICE

Commissioner for Patents
United States Patent and Trademark Office
P.O. Box 1450
Alexandria, VA 22313-1450
www.uspto.gov

MORGAN LEWIS & BOCKIUS LLP
1111 PENNSYLVANIA AVENUE NW
WASHINGTON DC 20004

In re Application of	:	
NOJO et al.	:	
Application No.: 10/534,699	:	DECISION
PCT No.: PCT/US2003/036618	:	
Int. Filing Date: 13 November 2003	:	
Priority Date: 13 November 2002	:	
Attorney's Docket No.: 063254-0233-US	:	
For: CHEMICAL MECHANICAL POLISHING	:	
COMPOSITION AND PROCESS	:	

This decision is in response to applicants' renewed petition under 37 CFR 1.137(b) and applicants' request for waiver of the petition fee under 37 CFR 1.137(b), both filed 22 January 2009 in the United States Patent and Trademark Office (USPTO).

BACKGROUND

On 13 November 2003, applicants filed international application PCT/US2003/036618, which designated the U.S. and claimed a priority date of 13 November 2002. A copy of the international application was communicated to the USPTO from the International Bureau on 27 May 2004. The thirty-month period for paying the basic national fee in the United States expired at midnight on 13 May 2005.

On 13 May 2005, applicants filed a submission for entry into the national stage in the United States which was accompanied by, *inter alia*, the U.S. Basic National Fee.

On 09 November 2007, the USPTO mailed a NOTIFICATION OF MISSING REQUIREMENTS UNDER 35 U.S.C. 371 (Form PCT/DO/EO/905) indicating, *inter alia*, that an oath or declaration of inventors in compliance with 37 CFR 1.497(a)-(b) was required.

On 13 August 2008, the USPTO mailed a NOTIFICATION OF ABANDONMENT (Form PCT/DO/EO/909) indicating that the application was abandoned as to the United States for failure to respond to the NOTIFICATION OF MISSING REQUIREMENTS mailed 09 November 2007 within the time period set therein.

On 04 November 2008, applicants filed a petition under 37 CFR 1.137(b) which was accompanied by, *inter alia*, a declaration of inventors, and a request to waive the fee required for a petition under 37 CFR 1.137(b).

On 30 December 2008, a decision was mailed dismissing without prejudice applicants' petition under 37 CFR 1.137(b) for failure provide the required reply–a proper declaration of inventors. The declaration of inventors filed 04 November 2008 was an improper composite declaration. The decision also indicated that a request for waiver of the petition fee must be accompanied by the petition fee set forth in 37 CFR 1.17(f).

On 22 January 2009, applicants filed the instant renewed petition under 37 CFR 1.137(b) which was accompanied by a declaration of inventors. The submission also included the petition fee set forth in 37 CFR 1.17(f) and a request to waive the petition fee required under 37 CFR 1.137(b).

DISCUSSION

Petition Under 37 CFR 1.137(b)

A petition to revive the present application under 37 CFR 1.137(b) must include:

(1) The required reply;
(2) The petition fee;
(3) A statement that the entire delay in filing the required reply from the due date for the reply until the filing of a grantable petition was unintentional.

Item (1) has now been satisfied.

As to item (2), applicant submitted the petition fee on 04 November 2008.

As to item (3), the required statement has been provided.

Declaration of Inventors

The declaration of inventors filed 22 January 2009 is in compliance with 37 CFR 1.497(a)-(b).

Request for Waiver of Petition Fee Required Under 37 CFR 1.137(b)

A requirement of the regulations which is not a requirement of the statutes, may be waived in an extraordinary situation, where justice requires. 37 CFR 1.183. Here, applicants request waiver of the petition fee under 37 CFR 1.137(b) because it is purported that applicants did not receive the NOTIFICATION OF MISSING REQUIREMENTS mailed 09 November 2007. However, failure to receive a paper is not an extraordinary situation under 37 CFR 1.183. See, e.g., MPEP § 711.03(c), para. I.A. (It is noted that applicants suspect that the correspondence may have been redirected (page 3 of petition filed 04 November 2008), which is not the same as having been lost in the mail. It is also noted that a petition which has been granted will not be reconsidered on a different basis.)

CONCLUSION

The petition under 37 CFR 1.137(b) is **GRANTED** for the reasons set forth above.

The petition under 37 CFR 1.183 is **DISMISSED** for the reasons set forth above.

This application is being forwarded to the National Stage Processing Branch of the Office of PCT Operations to continue national stage processing of the application.

/Daniel Stemmer/

Daniel Stemmer
Legal Examiner
PCT Legal Affairs
Office of Patent Cooperation Treaty
Legal Administration
Telephone: (571) 272-3301
Facsimile: (571) 273-0459

UNITED STATES PATENT AND TRADEMARK OFFICE

COMMISSIONER FOR PATENTS
UNITED STATES PATENT AND TRADEMARK OFFICE
P.O. BOX 1450
ALEXANDRIA, VA 22313-1450
www.uspto.gov

BLUE LEAF I.P., INC.
P.O. BOX 1895
M.S. 641
NEW HOLLAND, PA 17557

COPY MAILED
FEB 06 2008
OFFICE OF PETITIONS

In re Application of
Monika Ivantysynova, et al.
Application No. 10/534,729
Filed: December 22, 2005
Attorney Docket No. 18063

ON PETITION

This is a decision on the petition under 37 CFR 1.137(b) to revive the above-identified application, filed October 5, 2007.

The petition is **GRANTED**.

The application became abandoned for failure s to timely pay the issue and publication fees on or before August 17, 2007, as required by the Notice of Allowance and Fee(s) Due, mailed May 17, 2007, which set a statutory period for reply of three (3) months. A Notice of Abandonment was subsequently mailed on September 14, 2007. In response, on October 5, 2007, the present petition was filed.

The petition satisfies the requirements of 37 CFR 1.137(b) in that petitioner has supplied (1) the reply in the form of the $1,440 issue fee and the $300 publication fee; (2) the petition fee of $1,540; and (3) an adequate statement of unintentional delay.

The application is being referred to the Office of Data Management to be processed into a patent.

Telephone inquires related to this decision should be directed to the undersigned at (571) 272-3204. Telephone inquiries related to processing as a patent should be directed to (571) 272-4200.

Sherry D. Brinkley
Petitions Examiner
Office of Petitions

UNITED STATES PATENT AND TRADEMARK OFFICE

UNITED STATES DEPARTMENT OF COMMERCE
United States Patent and Trademark Office
Address: COMMISSIONER FOR PATENTS
P.O. Box 1450
Alexandria, Virginia 22313-1450
www.uspto.gov

MOFFAT & CO
427 LAURIER AVEUE W., SUITE 1200
OTTAWA, ON K1R 7Y2
CANADA

Mail Date: 04/21/2010

Applicant	: Jorgen S Nielsen	: DECISION ON REQUEST FOR
Patent Number	: 7599452	: RECALCULATION of PATENT
Issue Date	: 10/06/2009	: TERM ADJUSTMENT IN VIEW
Appliction No	: 10/534,735	: OF WYETH AND NOTICE OF INTENT TO
Filed	: 05/12/2005	: ISSUE CERTIFICATE OF CORRECTION
		:

The Request for Recalculation is **GRANTED** to the extent indicated.

The patent term adjustment has been determined to be **1098** days. The USPTO will *sua sponte* issue a certificate of correction reflecting the amount of PTA days determined by the recalculation.

Prior to the issuance of the certificate of correction, the USPTO will afford patentee an opportunity to be heard and request reconsideration. Accordingly, patentee has **one month or thirty (30) days**, whichever is longer, to file a request for reconsideration of this patent term adjustment calculation. See 35 U.S.C. 154(b)(3)(B)(ii) and 37 CFR 1.322(a)(4). No extensions of time will be granted under 37 CFR 1.136.

Patentee should use document code PET.OP if electronically filing a request for reconsideration of this patent term adjustment calculation. The patentee must also include the information required by 37 CFR 1.705(b)(2) and the fee required by 37 CFR 1.18(e). If patentee does not file a timely request for reconsideration of this patent term adjustment calculation including the information required by 37 CFR 1.705(b)(2) and the fee required by 37 CFR 1.18(e), the USPTO will issue a certificate of correction reflecting the PTA determination noted above.

Patentee should be aware that in order to preserve the right to review in the United States District Court for the District of Columbia of the USPTO patent term adjustment determination, patentee must ensure that he or she also take the steps required under 35 U.S.C. 154(b)(4)(A) in a timely manner. Nothing in the request for recalculation should be construed as providing an alternative time frame for commencing a civil action under 35 U.S.C. 154(b)(4)(A).

Any questions concerning this decision should be directed to the Office of Patent Legal Administration at 571-272-7702.

UNITED STATES PATENT AND TRADEMARK OFFICE

UNITED STATES DEPARTMENT OF COMMERCE
United States Patent and Trademark Office
Address: COMMISSIONER FOR PATENTS
P.O. Box 1450
Alexandria, Virginia 22313-1450
www.uspto.gov

CROWELL & MORING LLP
INTELLECTUAL PROPERTY GROUP
P.O. BOX 14300
WASHINGTON, DC 20044-4300

Mail Date: 05/10/2010

Applicant	: Raymond John Brooks	: DECISION ON REQUEST FOR
Patent Number	: 7598922	: RECALCULATION of PATENT
Issue Date	: 10/06/2009	: TERM ADJUSTMENT IN VIEW
Application No	: 10/534,738	: OF WYETH
Filed	: 05/12/2005	:
		:

The Patentee's Request for Recalculation is **DISMISSED.**

This Request is deemed ineligible for consideration for one or more of the following reasons:

(A). The patent for which PTA recalculation is requested is either a design or reissue application or is a reexamination proceeding;

(B). The patent for which PTA recalculation is requested resulted from a utility or plant application filed under 35 USC 111(a) before May 29, 2000 and no CPA filed in the application on/after May 29, 2000;

(C). The patent for which PTA recalculation is requested resulted from an international application in which the international filing date was before May 29, 2000 and no CPA filed in the application on/after May 29, 2000;

(D). The patent for which PTA recalculation is requested issued on/after March 2, 2010;

(E). The Request for Recalculation was filed more than 180 days after the grant date of the patent and the request was not filed within two months of a dismissal of a request for reconsideration of the of the patent term under 37 CFR 1.705(d);

(F). The Request for Recalculation is not solely limited to USPTO pre-Wyeth interpretation of 35 U.S.C. 154(b)(2)(A);

or

(G). A civil action was filed pursuant to 35 U.S.C. 154(b)(4)(A)concerning the same patent at issue in this request.

Patentee may file a reply to this decision dismissing the Request for Recalculation. Patentee must file such reply within one month or thirty days, whichever is longer, of the mail date of the decision dismissing the Request for Recalculation. No fee is required if patentee is asserting in the reply that the dismissal for ineligibility is improper.

Patentee should use document code PET.OP if electronically filing a reply to this dismissal. If the USPTO finds that the request was improperly deemed ineligible, the USPTO will mail applicant a recalculation determination.

Patentee should be aware that in order to preserve the right to review in the United States District Court for the District of Columbia of the USPTO patent term adjustment determination, patentee must ensure that he or she also take the steps required under 35 U.S.C. 154(b)(4)(A). Nothing in the request for recalculation should be construed as providing an alternative time frame for commencing a civil action under 35 U.S.C. 154 (b)(4)(A).

Any questions concerning this decision should be directed to the Office of Patent Legal Administration at 571-272-7702.

UNITED STATES PATENT AND TRADEMARK OFFICE

Commissioner for Patents
United States Patent and Trademark Office
P.O. Box 1450
Alexandria, VA 22313-1450
www.uspto.gov

OBLON, SPIVAK, McCLELLAND,
MAIER & NEUSTADT, P.C.
1940 DUKE STREET
ALEXANDRIA, VA 22314

COPY MAILED

JUL 16 2007

OFFICE OF PETITIONS

In re Application of	:
Takeshi Shimoyama	:
Application No. 10/534,752	: DECISION GRANTING PETITION
Filed: May 13, 2005	: UNDER 37 CFR 1.313(c)(2)
Attorney Docket No. 271362US6PCT	:

This is a decision on the petition, filed July 16, 2007, under 37 CFR 1.313(c)(2) to withdraw the above-identified application from issue after payment of the issue fee.

The petition is **GRANTED**.

The above-identified application is withdrawn from issue for consideration of a submission under 37 CFR 1.114 (request for continued examination). See 37 CFR 1.313(c)(2).

Petitioner is advised that the issue fee paid on June 21, 2007 in the above-identified application cannot be refunded. If, however, the above-identified application is again allowed, petitioner may request that it be applied towards the issue fee required by the new Notice of Allowance.[1]

Telephone inquiries should be directed to the undersigned at (571) 272-3218.

This matter is being referred to Technology Center AU 2827 for processing of the request for continued examination under 37 CFR 1.114 and for consideration of the Information Disclosure Statement.

Frances Hicks
Petitions Examiner
Office of Petitions

C:\Documents and Settings\fhicks\My Documents\470\july10\534752.wpd

---

[1] *The request to apply the issue fee to the new Notice may be satisfied by completing and returning the new Part B – Fee(s) Transmittal Form (along with any balance due at the time of submission). Petitioner is advised that the Issue Fee Transmittal Form* ***must*** *be completed and timely submitted to avoid abandonment.*

UNITED STATES PATENT AND TRADEMARK OFFICE

Commissioner for Patents
United States Patent and Trademark Office
P.O. Box 1450
Alexandria, VA 22313-1450
www.uspto.gov

OBLON SPIVAK MCCLELLAND
MAIER & NEUSTADT P.C.
1940 DUKE STREET
ALEXANDRIA, VA 22314

COPY MAILED
FEB 08 2008
OFFICE OF PETITIONS

In re Patent No. 7,259,215	:	
Issue Date: August 21, 2007	:	
Application No. 10/534,755	:	ON PETITION
Filed: May 13, 2005	:	
Attorney Docket No. 272236US0PCT	:	

This is a decision on the petition filed October 5, 2007, which is being treated as a petition under 37 CFR 3.81(b)[1] to correct the assignee's name on the front page of the above-identified patent by way of a Certificate of Correction.

The petition is **granted.**

Telephone inquiries concerning this matter may be directed to the undersigned at (571) 272-3210. Any questions concerning the issuance of the Certificate of Correction should be directed to the Certificates of Correction Branch at (703) 305-8309.

This application is being forwarded to the Certificates of Correction Branch for issuance of the requested Certificate of Correction.

Irvin Dingle
Petitions Examiner
Office of Petitions

[1] See Official Gazette of June 22, 2004

UNITED STATES PATENT AND TRADEMARK OFFICE

Commissioner for Patents
United States Patent and Trademark Office
P.O. Box 1450
Alexandria, VA 22313-1450
www.uspto.gov

Paper No.

FOLEY AND LARDNER LLP
SUITE 500
3000 K STREET NW
WASHINGTON DC 20007

COPY MAILED

SEP 04 2008

OFFICE OF PETITIONS

In re Application of	:	
Kobayashi et al.	:	
Application No. 10/534,760	:	LETTER REGARDING
Filed: July 5, 2005	:	PATENT TERM ADJUSTMENT
Atty Docket No. 036910-0114	:	

This is in response to the "COMMUNICATION REGARDING PATENT TERM ADJUSTMENT," filed June 24, 2008. Pursuant to their duty of candor and good faith to the Office, applicants disclose that the initial determination of patent term adjustment at the time of the mailing of the notice of allowance of sixty-two (62) days disagrees with their own calculation.

The request for review of the patent term adjustment is **GRANTED**.

The Office has updated the PAIR screen to reflect that the correct Patent Term Adjustment (PTA) determination at the time of the mailing of the Notice of Allowance is forty-four **(44)** days. A copy of the updated PALM screen, showing the correct determination, is enclosed.

On March 25, 2008, the Office mailed the Determination of Patent Term Adjustment under 35 U.S.C. 154(b) in the above-identified application. The Notice stated that the patent term adjustment to date is 62 days. Applicants do not state a basis for their disclosure that the initial determination of patent term adjustment of 62 days is incorrect.

A review of the record reveals that in response to the final Office action mailed April 19, 2007, applicants did not file a response in compliance with §1.113(c) until August 6, 2007,

three months and 18 days later. As such, a period of reduction of 18 days is being entered pursuant to 37 C.F.R. §1.704(b).

In view thereof, the correct initial determination of the patent term adjustment at the time of the mailing of the notice of allowance is forty-four (44) days.

As this letter was submitted as an advisement to the Office of an error in Applicants' favor, the Office will not assess the $200.00 fee under 37 CFR 1.18(e). The Office thanks Applicants for their good faith and candor in bringing this to the attention of the Office.

The application is being forwarded to the Office of Data Management for issuance of a patent. The patent term adjustment indicated on the patent (as shown on the Issue Notification mailed about three weeks prior to patent issuance) will include any additional adjustment accrued both for Office delay in issuing the patent more than four months after payment of the issue fee and satisfaction of all outstanding requirements, and for the Office taking in excess of three years to issue the patent (to the extent that the three-year period does not overlap with periods already accorded and the period is not consumed by the request for continued examination).

Telephone inquiries specific to this matter should be directed to the undersigned at (571) 272-3219.

Nancy Johnson

Nancy Johnson
Senior Petitions Attorney
Office of Petitions

Enclosure: Copy of REVISED PALM Screen

Day : Wednesday

PALM INTRANET

Date: 9/3/2008
Time: 15:43:50

PTA Calculations for Application: 10/534760			
Application Filing Date:	07/05/2005	PTO Delay (PTO):	95
Issue Date of Patent:		Three Years:	0
Pre-Issue Petitions:	0	Applicant Delay (APPL):	33
Post-Issue Petitions:	0	Total PTA (days):	44
PTO Delay Adjustment:	-18		

File Contents History

Number	Date	Contents Description	PTO	APPL	START
61	09/03/2008	ADJUSTMENT OF PTA CALCULATION BY PTO		18	
51	03/25/2008	MAIL NOTICE OF ALLOWANCE			
50	03/20/2008	ISSUE REVISION COMPLETED			
49	03/20/2008	DOCUMENT VERIFICATION			
48	03/20/2008	NOTICE OF ALLOWANCE DATA VERIFICATION COMPLETED			
47	03/20/2008	NOTICE OF ALLOWABILITY			
46	03/20/2008	PRE-APPEALS CONFERENCE DECISION - REOPEN PROSECUTION			
45	12/26/2007	REQUEST FOR PRE-APPEAL CONFERENCE FILED			
44	12/26/2007	NOTICE OF APPEAL FILED		33	40
43	12/26/2007	REQUEST FOR EXTENSION OF TIME - GRANTED			
42	12/17/2007	MAIL EXAMINER INTERVIEW SUMMARY (PTOL - 413)			
41	12/13/2007	EXAMINER INTERVIEW SUMMARY RECORD (PTOL - 413)			
40	08/23/2007	MAIL NON-FINAL REJECTION			
39	08/20/2007	NON-FINAL REJECTION			
38	08/15/2007	DATE FORWARDED TO EXAMINER			
37	08/06/2007	AMENDMENT SUBMITTED/ENTERED WITH FILING OF CPA/RCE			
36	08/15/2007	DATE FORWARDED TO EXAMINER			
35	08/06/2007	REQUEST FOR CONTINUED EXAMINATION (RCE)			
34	08/15/2007	DISPOSAL FOR A RCE/CPA/129 (EXPRESS ABANDONMENT IF CPA)			

33	08/06/2007	REQUEST FOR EXTENSION OF TIME - GRANTED			
32	08/06/2007	WORKFLOW - REQUEST FOR RCE - BEGIN			
29	04/19/2007	MAIL FINAL REJECTION (PTOL - 326)			
28	04/16/2007	FINAL REJECTION			
27	02/10/2007	DATE FORWARDED TO EXAMINER			
26	01/24/2007	RESPONSE AFTER NON-FINAL ACTION			
25	10/26/2006	MAIL NON-FINAL REJECTION	95		22
24	10/25/2006	NON-FINAL REJECTION			
23	03/29/2006	DATE FORWARDED TO EXAMINER			
22	03/23/2006	RESPONSE AFTER NON-FINAL ACTION			
21	03/22/2006	CASE DOCKETED TO EXAMINER IN GAU			
20	12/27/2005	MAIL NON-FINAL REJECTION			
19	12/22/2005	NON-FINAL REJECTION			
17	10/27/2005	CASE DOCKETED TO EXAMINER IN GAU			
16	10/26/2005	IFW TSS PROCESSING BY TECH CENTER COMPLETE			
15	10/26/2005	CASE DOCKETED TO EXAMINER IN GAU			
14	07/05/2005	OATH OR DECLARATION FILED (INCLUDING SUPPLEMENTAL)			
12	07/05/2005	REFERENCE CAPTURE ON IDS			
9	08/29/2005	CLEARED BY OIPE CSR			
8	08/29/2005	CLEARED BY OIPE CSR			
7	08/29/2005	CLEARED BY OIPE CSR			
6	08/26/2005	CLEARED BY OIPE CSR			
5	07/05/2005	371 COMPLETION DATE			
4	08/16/2005	APPLICATION DISPATCHED FROM OIPE			
3	08/16/2005	NOTICE OF DO/EO ACCEPTANCE MAILED			

Search Another: Application# Search

EXPLANATION OF PTA CALCULATION

EXPLANATION OF PTE CALCULATION

To go back, right click here and select Back. To go forward, right click here and select Forward. To refresh, right click here and select Refresh.

Back to OASIS | Home page

UNITED STATES PATENT AND TRADEMARK OFFICE

Commissioner for Patents
United States Patent and Trademark Office
P.O. Box 1450
Alexandria, VA 22313-1450
www.uspto.gov

KENYON & KENYON LLP
ONE BROADWAY
NEW YORK NY 10004

MAILED

APR 22 2009

OFFICE OF PETITIONS

In re Application of	:	
Baumkoetter et al.	:	
Application No. 10/534,768	:	DECISION ON PETITION
Filed: May 9, 2006	:	
Attorney Docket No. 2345/219	:	

This is a decision on the petition under 37 CFR 1.137(b), filed March 23, 2009, which will be treated as a petition to withdraw of the holding of abandonment in the above-identified application.

The petition to withdraw the holding of abandonment is **GRANTED.**

The above-identified application was held abandoned for failure to timely reply to the non-final Office action mailed September 17, 2007, which set a shortened statutory period for reply of three (3) months. A three-month extension of time and reply under the provisions of 37 CFR 1.136(a) was timely obtained on March 17, 2008 (Certificate of Mailing date). A Notice of Abandonment was mailed on March 21, 2008.

Petitioner contends that a response in the form of an Amendment and extension of time was timely filed on March 17, 2008(Certificate of Mailing date). A review of the record shows that this is the case.

In view of the above, the holding of abandonment is hereby withdrawn and the application restored to pending status. The petition to revive under 37 CFR 1.137(b) is hereby **DISMISSED AS MOOT.**

A petition to withdraw the holding of abandonment under the provisions of 37 CFR 1.181 does not require a fee.

As petitioner also submitted a Notice of Appeal filed on December 8, 2008, this matter is being referred to Technology Center AU 2617 for further processing.

Telephone inquiries concerning this decision should be directed to Joan Olszewski at (571) 272-7751.

/Liana Walsh/
Liana Walsh
Petitions Examiner
Office of Petitions

23 FEB 2006

#7

UNITED STATES PATENT AND TRADEMARK OFFICE

Commissioner for Patents
United States Patent and Trademark Office
P.O. Box 1450
Alexandria, VA 22313-1450
www.uspto.gov

Donald S. Dowden
Cooper & Dunham LLP
1185 Avenue of the Americas
New York NY 10036

In re Application of	:	
MOLLER LARSEN et al.	:	
Application No.: 10/534,769	:	DECISION
PCT No.: PCT/DK03/00778	:	
Int. Filing Date: 12 November 2003	:	
Priority Date: 12 November 2002	:	
Attorney Docket No.: 1175/74050	:	
For: LIGHTNING PROTECTION OF A PITCH-	:	
CONTROLLED WIND TURBINE BLADE	:	

This is a decision on applicants' "PETITION UNDER RULE 47", which has properly been treated as a petition under 37 CFR 1.47(a), filed 21 December 2005 in the United States Patent and Trademark Office (USPTO).

BACKGROUND

On 12 November 2003, applicants filed international application PCT/DK03/00778, which designated the United States and claimed a priority date of 12 November 2002. A copy of the international application was communicated from the International Bureau to the USPTO on 27 May 2004. The thirty-month period for paying the basic national fee in the United States expired at midnight on 12 May 2005.

On 12 May 2005, applicants filed a submission for entry into the national stage in the United States which was accompanied by, *inter alia*, the U.S. Basic National Fee.

On 18 October 2005, the United States Designated/Elected Office (DO/EO/US) mailed a NOTIFICATION OF MISSING REQUIREMENTS UNDER 35 U.S.C. 371 (Form PCT/DO/EO/905) indicating, *inter alia*, that an oath or declaration of the inventors in compliance with 37 CFR 1.497(a)-(b) and the surcharge under 37 CFR 1.492(e) for providing the oath or declaration later than thirty months from the priority date were required.

On 21 December 2005, applicants filed the instant petition under 37 CFR 1.47(a) which was accompanied by, *inter alia*, a declaration of inventors, the surcharge under 37 CFR 1.492(e) for providing the declaration of inventors later than thirty months from the priority date, a copy of an assignment, and a copy of a memo from Soren Hoffer.

DISCUSSION

A petition under 37 CFR 1.47(a) must be accompanied by: (1) the fee under 37 CFR 1.17(h); (2) factual proof that the missing joint inventor refuses to execute the application or cannot be reached after diligent effort; (3) a statement of the last known address of the missing inventor; and (4) an oath or declaration by each 37 CFR 1.47(a) applicant on his or her own behalf and on behalf of the non-signing joint inventor.

As to item (1), the petition fee is $200 rather than $130. The balance of $70 has been charged to Deposit Account 03-3125.

Items (3) and (4) have been met.

As to item (2), it is not clear whether it is being alleged that non-signing inventor Flemming Moller Larsen refuses to execute the application or that he cannot be reached after diligent effort. At least one communication appears to have been sent to Mr. Moller Larsen's last known address. However, it is not clear whether he resided at this address when this communication was sent. Some type of verification that Mr. Moller Larsen resides at this address, such as a return receipt with Mr. Moller Larsen's signature, is required to establish a refusal to sign. Also, to establish a refusal to sign, it is required that the inventor be presented with the application papers (specification, including claims, drawings, and oath or declaration). See MPEP 409.03(d). It is not clear from the memo of Soren Hoffer that a copy of the application papers including the specification was sent to Mr. Moller Larsen. "It is reasonable to require that the inventor be presented with the application papers before a petition under 37 CFR 1.47 is granted since such a procedure ensures that the inventor is apprised of the application to which the oath or declaration is directed. *In re Gray*, 115 USPQ 80 (Comm'r Pat. 1956)." MPEP 409.03(d). If Mr. Moller Larsen is no longer at this address, steps must be taken to locate his whereabouts and, if he is not located, documentation of those steps must be provided.

CONCLUSION

For the above reasons, applicants' petition under 37 CFR 1.47(a) is **DISMISSED** without prejudice.

If reconsideration on the merits of this petition is desired, a proper response must be filed within TWO (2) MONTHS from the mail date of this decision. **Failure to timely file the proper response will result in abandonment of this application.** Any reconsideration request should include a cover letter entitled "Renewed Petition Under 37 CFR 1.47(a)". No additional petition fee is required. Extensions of time may be obtained under 37 CFR 1.136(a).

Please direct further correspondence with respect to this matter to Mail Stop PCT, Commissioner for Patents, Office of PCT Legal Administration, P.O. Box 1450, Alexandria,

Virginia 22313-1450, with the contents of the letter marked to the attention of the Office of PCT Legal Administration.

Daniel Stemmer
Legal Examiner
PCT Legal Affairs
Office of Patent Cooperation Treaty
Legal Administration
Telephone: (571) 272-3301
Facsimile: (571) 273-0459

27 SEP 2006

UNITED STATES PATENT AND TRADEMARK OFFICE

Commissioner for Patents
United States Patent and Trademark Office
P.O. Box 1450
Alexandria, VA 22313-1450
www.uspto.gov

Donald S. Dowden
Cooper & Dunham LLP
1185 Avenue of the Americas
New York NY 10036

In re Application of	:	
MOLLER LARSEN et al.	:	
Application No.: 10/534,769	:	DECISION
PCT No.: PCT/DK03/00778	:	
Int. Filing Date: 12 November 2003	:	
Priority Date: 12 November 2002	:	
Attorney Docket No.: 1175/74050	:	
For: LIGHTNING PROTECTION OF A PITCH-	:	
CONTROLLED WIND TURBINE BLADE	:	

This is a decision on applicants' "RENEWED PETITION UNDER37 CFR 1.47(a)" filed 22 August 2006 in the United States Patent and Trademark Office (USPTO).

BACKGROUND

On 12 November 2003, applicants filed international application PCT/DK03/00778, which designated the United States and claimed a priority date of 12 November 2002. A copy of the international application was communicated from the International Bureau to the USPTO on 27 May 2004. The thirty-month period for paying the basic national fee in the United States expired at midnight on 12 May 2005.

On 12 May 2005, applicants filed a submission for entry into the national stage in the United States which was accompanied by, *inter alia*, the U.S. Basic National Fee.

On 18 October 2005, the United States Designated/Elected Office (DO/EO/US) mailed a NOTIFICATION OF MISSING REQUIREMENTS UNDER 35 U.S.C. 371 (Form PCT/DO/EO/905) indicating, *inter alia*, that an oath or declaration of the inventors in compliance with 37 CFR 1.497(a)-(b) and the surcharge under 37 CFR 1.492(e) for providing the oath or declaration later than thirty months from the priority date were required.

On 21 December 2005, applicants filed a petition under 37 CFR 1.47(a) which was accompanied by, *inter alia*, a declaration of inventors, the surcharge under 37 CFR 1.492(e) for providing the declaration of inventors later than thirty months from the priority date, a copy of an assignment, and a copy of a memo from Soren Hoffer.

On 23 February 2006, a decision was mailed dismissing applicants' petition under 37 CFR 1.47(a) without prejudice for failing to provide factual proof that the missing joint inventor refuses to execute the application or cannot be reached after diligent effort.

On 22 August 2006, applicants filed the instant "RENEWED PETITION UNDER 37 CFR 1.47(a)" which was accompanied by, inter alia, a petition/fee for a four month extension of time, a copy of an e-mail exchange between Donald Dowden and a reference service in Denmark, a copy of a letter from Mr. Dowden to non-signing inventor Flemming Moller Larsen, a copy of a FedEx international air waybill, and a printout of a FedEx tracking report.

DISCUSSION

A petition under 37 CFR 1.47(a) must be accompanied by: (1) the fee under 37 CFR 1.17(h); (2) factual proof that the missing joint inventor refuses to execute the application or cannot be reached after diligent effort; (3) a statement of the last known address of the missing inventor; and (4) an oath or declaration by each 37 CFR 1.47(a) applicant on his or her own behalf and on behalf of the non-signing joint inventor.

As noted in the decision mailed 23 February 2006, items (1), (3) and (4) have been met.

Item (2) has now been met as well. Mr. Moller Larsen has been presented with a copy of the application papers and his conduct constitutes a refusal to sign.

CONCLUSION

For the above reasons, applicants' renewed petition under 37 CFR 1.47(a) is **GRANTED**.

As provided in 37 CFR 1.47(a), a notice of the filing of this application will be forwarded to non-signing inventor at his last known address of record.

A notice of the filing of the application under 37 CFR 1.47(a) will be published in the Official Gazette.

This application is being forwarded to the National Stage Processing Branch of the Office of PCT Operations to continue national stage processing of the application, including the accordation of a 35 U.S.C. §§371(c)(1), (c)(2), and (c)(4) date of **21 December 2005**.

Daniel Stemmer
Legal Examiner
PCT Legal Affairs
Office of Patent Cooperation Treaty
Legal Administration
Telephone: (571) 272-3301; Facsimile: (571) 273-0459

27 SEP 2006

UNITED STATES PATENT AND TRADEMARK OFFICE

Commissioner for Patents
United States Patent and Trademark Office
P.O. Box 1450
Alexandria, VA 22313-1450
www.uspto.gov

Flemming Moller Larsen
Finksvej 5, Stubbum
DK 6070 Christiansfeld
Denmark

In re Application of
MOLLER LARSEN et al.
Application No.: 10/534,769
PCT No.: PCT/DK03/00778
Int. Filing Date: 12 November 2003
Priority Date: 12 November 2002
Attorney Docket No.: 1175/74050
For: LIGHTNING PROTECTION OF A PITCH-CONTROLLED WIND TURBINE BLADE

Dear Mr. Moller Larsen:

You are named as an inventor in the above-captioned United States national stage application, filed under the provisions of 37 CFR 1.47(a) and 35 U.S.C. 116. Should a patent be granted, you will be designated as an inventor.

As a named inventor, you are entitled to inspect any paper in the file wrapper of the application, order copies of all or any part thereof (at a prepaid cost per 37 CFR 1.19) or to make your position of record in the application. Alternatively, you may arrange to do any of the preceding through a registered patent agent or attorney presenting written authorization from you. Joining in the application would entail the filing of an appropriate oath or declaration by you pursuant to 37 CFR 1.63.

Daniel Stemmer
PCT Legal Examiner
PCT Legal Affairs
Office of Patent Cooperation Treaty
Legal Administration
Telephone: (571) 272-3301
Facsimile: (571) 273-0459

Donald S. Dowden
Cooper & Dunham LLP
1185 Avenue of the Americas
New York NY 10036

03 NOV 200

#7

UNITED STATES PATENT AND TRADEMARK OFFICE

Commissioner for Patents
United States Patent and Trademark Office
P.O. Box 1450
Alexandria, VA 22313-1450
www.uspto.gov

David L. Parker
Fulbright & Jaworski, LLP
600 Congress Avenue, Suite 2400
Austin, Texas 78701

In re Application of BAUERLE, et al. Application No.: 10/534,788 PCT No.: PCT/EP03/12664 Int. Filing Date: 12 November 2003 Priority Date: 13 November 2002 Attorney Docket No.: VOSS:007US For: METHOD FOR IDENTIFYING ANTIGEN SPECIFIC B CELLS	DECISION ON PETITION UNDER 37 CFR 1.137(b)

The petition to revive under 37 CFR 1.137(b) filed 06 October 2005 in the above-captioned application is hereby **GRANTED** as follows:

Applicant's statement that "the entire delay in filing the required reply from the due date for the reply until the filing of a grantable petition under 37 CFR 1.137(b) was unintentional" meets the requirements of 37 CFR 1.137(b)(3).

A review of the application file reveals that applicant has submitted the basic national fee and the requirements of 37 CFR 1.137(b) have been satisfied. Therefore, the request to revive the application abandoned under 35 U.S.C. 371(d) is granted as to the National stage in the United States of America.

This application is being returned to the United States Designated/Elected Office for processing in accordance with this decision.

Anthony Smith
Attorney-Advisor
Office of PCT Legal Administration
Tel.: 571-272-3298
Facsimile: 571-273-0459

UNITED STATES PATENT AND TRADEMARK OFFICE

Commissioner for Patents
United States Patent and Trademark Office
P.O. Box 1450
Alexandria, VA 22313-1450
www.uspto.gov

BIRCH STEWART KOLASCH & BIRCH
PO BOX 747
FALLS CHURCH VA 22040-0747

COPY MAILED

OCT 2 0 2008

OFFICE OF PETITIONS

In re Application of	:	
TSUURA, et al.	:	
Application No. 10/534,798	:	DECISION GRANTING PETITION
Filed: October 13, 2005	:	UNDER 37 CFR 1.313(c)(2)
Attorney Docket No. **0445-0352PUS1**	:	

This is a decision on the petition under 37 CFR 1.313(c)(2), filed October 17, 2008, to withdraw the above-identified application from issue after payment of the issue fee.

The petition is **GRANTED.**

The above-identified application is withdrawn from issue for consideration of a submission under 37 CFR 1.114 (request for continued examination). *See* 37 CFR 1.313(c)(2).

Petitioner is advised that the issue fee paid on September 29, 2008 cannot be refunded. If, however, this application is again allowed, petitioner may request that it be applied towards the issue fee required by the new Notice of Allowance.[1]

Telephone inquiries should be directed to the undersigned at (571) 272-7253.

This application is being referred to Technology Center AU 1791 for processing of the request for continued examination under 37 CFR 1.114 and for consideration of the concurrently filed information disclosure statement.

Monica A. Graves
Petitions Examiner
Office of Petitions

---

[1] *The request to apply the issue fee to the new Notice may be satisfied by completing and returning the new Part B – Fee(s) Transmittal Form (along with any balance due at the time of submission). Petitioner is advised that the Issue Fee Transmittal Form* ***must*** *be completed and timely submitted to avoid abandonment of the application.*

SPE RESPONSE FOR CERTIFICATE OF CORRECTION

Paper No.: _____

DATE : 11/13/08

TO SPE OF : ART UNIT 2861 Luu Matthew (Spe)

SUBJECT : Request for Certificate of Correction for Appl. No.: 10/534804 Patent No.: 7322686

Please respond to this request for a certificate of correction within 7 days.

FOR IFW FILES:

Please review the requested changes/corrections as shown in the **COCIN** document(s) in the IFW application image. No new matter should be introduced, nor should the scope or meaning of the claims be changed.

Please complete the response (see below) and forward the completed response to scanning using document code **COCX**.

FOR PAPER FILES:

Please review the requested changes/corrections as shown in the attached certificate of correction. Please complete this form (see below) and forward it with the file to:

Certificates of Correction Branch (CofC)
South Tower - 9A22
Palm Location 7580

Certificates of Correction Branch
703-308-9390 ext. _____

Thank You For Your Assistance

The request for issuing the above-identified correction(s) is hereby:
Note your decision on the appropriate box.

- ☑ **Approved** — All changes apply.
- ☐ **Approved in Part** — Specify below which changes **do not** apply.
- ☐ **Denied** — State the reasons for denial below.

Comments: The certificate for correction has been approved.

MATTHEW LUU
SUPERVISORY PATENT EXAMINER

SPE

2861
Art Unit

FAX COVER SHEET

United States Patent and Trademark Office

STIC Scientific and Technical Information Center

Today's Date 1/14/10

Total Pages (including cover)

Recipient Henry Randall

Fax 703-756-1644

Phone

Sender MATTHEW LUU (SPE 2861)

Fax

Phone

Subject Approved certificate of correction 10/534,804 7,322,686

COMMENTS

SIRA Delivering Technologies for Patents

UNITED STATES PATENT AND TRADEMARK OFFICE

Commissioner for Patents
United States Patent and Trademark Office
P.O. Box 1450
Alexandria, VA 22313-1450
www.uspto.gov

RATNERPRESTIA
P O BOX 980
VALLEY FORGE, PA 19482-0980

COPY MAILED

MAR 2 1 2008

OFFICE OF PETITIONS

In re Application of
Malcolm L. S. Dean
Application No. 10/534,841
Filed: May 13, 2005
Attorney Docket No. GRIP:106US

DECISION ON PETITION
TO WITHDRAW
FROM RECORD

This is a decision on the Request to Withdraw as attorney or agent of record under 37 C.F.R. § 1.36(b) filed December 11, 2007.

The request is **APPROVED**.

A grantable request to withdraw as attorney/agent of record must be signed by every attorney/agent seeking to withdraw or contain a clear indication that one attorney is signing on behalf of another/others. A request to withdraw will not be approved unless at least 30 (thirty) days would remain between the date of approval and the later of the expiration date of a time to file a response or the expiration date of the maximum time period which can be extended under 37 C.F.R. § 1.136(a).

The request was signed by Jacques L. Etkowicz on behalf of all attorneys of record who are associated with customer No. 23122.

All attorneys/agents associated with the Customer Number 23122 have been withdrawn.

Applicant is reminded that there is no attorney of record at this time.

The correspondence address of record has been changed and the new correspondence address is the address indicated below.

There is an outstanding Office action mailed January 25, 2008 that requires a reply from the applicant.

Telephone inquiries concerning this decision should be directed to undersigned at 571-272-1642.

April M. Wise
Petitions Examiner
Office of Petitions

cc: MALCOLM LEONARD STEPHEN DEAN
18 MENKIRA STREET
MANSFIELD, QUEENLAND 4122
AUSTRALIA

UNITED STATES PATENT AND TRADEMARK OFFICE

UNITED STATES DEPARTMENT OF COMMERCE
United States Patent and Trademark Office
Address: COMMISSIONER FOR PATENTS
P.O. Box 1450
Alexandria, Virginia 22313-1450
www.uspto.gov

APPLICATION NUMBER	FILING OR 371(C) DATE	FIRST NAMED APPLICANT	ATTY. DOCKET NO./TITLE
10/534,841	05/13/2005	Malcolm L. S. Dean	GRIP:106US

CONFIRMATION NO. 8951

POWER OF ATTORNEY NOTICE

23122
RATNERPRESTIA
P O BOX 980
VALLEY FORGE, PA 19482-0980

OC000000028990245

Date Mailed: 03/20/2008

NOTICE REGARDING CHANGE OF POWER OF ATTORNEY

This is in response to the Power of Attorney filed 12/11/2007.

- The withdrawal as attorney in this application has been accepted. Future correspondence will be mailed to the new address of record. 37 CFR 1.33.

/amwise/

Office of Initial Patent Examination (571) 272-4000 or 1-800-PTO-9199

UNITED STATES PATENT AND TRADEMARK OFFICE

#4

Commissioner for Patents
United States Patent and Trademark Office
P.O. Box 1450
Alexandria, VA 22313-1450
www.uspto.g

18 JAN 2006

DLA PIPER RUDNICK GRAY CARY US LLP
153 Townsend Street, Suite 800
San Francisco, CA 94107-1907

In re Application of:	
ALDER, John, M.	DECISION ON PETITION
U.S. Application No.: 10/534,844	UNDER 37 CFR 1.137(b)
Int'l Application No.: PCT/GB2003/004940	
Int'l Filing Date: 13 November 2003	
Priority Date: 13 November 2002	
Attorney's Docket No.: 358000-991100	
For: A COMMUNICATOR, A GAZ ELECTRODE, A METHOD OF ELECTROPLATING AND A METHOD OF INITIATING COLD FUSION	

The petition to revive under 37 CFR 1.137(b) filed 28 December 2005 in the above-captioned application is hereby **GRANTED** as follows:

Applicant's statement that "the entire delay in filing the required reply from the due date for the required reply until the filing of a grantable petition under 37 CFR 1.137(b) was unintentional" satisfies the requirement of 37 CFR 1.137(b)(3).

Pursuant to the authorization included with the petition, Deposit Account No. 07-1896 will be charged the small entity basic national fee, search fee, examination fee, and petition fee.

The requirements of 37 CFR 1.137(b) have been satisfied. Therefore, the request to revive the application is granted as to the United States of America.

The petition includes an executed declaration in compliance with 37 CFR 1.497. Deposit Account No. 07-1896 will be charged the small entity surcharge for filing the declaration (and the search and examination fees) later than thirty months after the priority date.

This application is being returned to the National Stage Processing Branch of the Office of PCT Operations for further processing in accordance with this decision. The date under 35 U.S.C. 371(c)(1), (c)(2), and (c)(4) is 28 December 2005.

Richard M. Ross
PCT Petitions Attorney
Office Of PCT Legal Administration
Telephone: (571) 272-3296
Facsimile: (571) 273-0459

UNITED STATES PATENT AND TRADEMARK OFFICE

Commissioner for Patents
United States Patent and Trademark Office
P.O. Box 1450
Alexandria, VA 22313-1450
www.uspto.gov

DLP PIPER US LLP
153 TOWNSEND STREET, SUITE 800
SAN FRANCISCO, CA 94107-1957

COPY MAILED

AUG 1 8 2008

In re Application of	:	
ALDER, John M.	:	
Application No. 10/534,844	:	DECISION ON PETITION
Filed: December 28, 2005	:	TO WITHDRAW
Attorney Docket No. 33327.00002	:	FROM RECORD
	:	

This is a decision on the Request to Withdraw as attorney or agent of record under 37 C.F.R. § 1.36(b), filed April 3, 2008.

The request is DISMISSED as moot.

A review of the file record indicates that the power of attorney to DLP PIPER US LLP has been revoked by the assignee of the patent application on February 14, 2008. Accordingly, the request to withdraw under 37 C.F.R. § 1.36(b) is moot.

All future communications from the Office will continue to be directed to the below-listed address until otherwise notified by applicant.

Telephone inquires concerning this decision should be directed to the undersigned at 571-272- 7253.

Monica A. Graves
Petitions Examiner
Office of Petitions

cc: FOX ROTHCHILD, LLP
PRINCETON PIKE CORORATE CENTER
997 LENOX DRIVE, BUILDING #3
LAWRENCEVILL, NJ 08648

29 SEP 2005

UNITED STATES PATENT AND TRADEMARK OFFICE

Commissioner for Patents
United States Patent and Trademark Office
P.O. Box 1450
Alexandria, VA 22313-1450
www.uspto.gov

Richard M. Goldberg
25 East Salem Street
Suite 419
Hackensack, NJ 07601

In re Application of MATEU Application No.: 10/534,847 PCT No.: PCT/ES03/00579 Int. Filing Date: 14 November 2003 Priority Date: 19 November 2002 Attorney Docket No.: 229/1/059 For: DISPOSABLE PROTECTOR FOR THE SEAT RING OR UPPER PART OF A TOILET	DECISION ON PETITION UNDER 37 CFR 1.42

This application is before the Office of PCT Legal Administration for issues arising under 35 U.S.C. 371. The combined declaration and declaration filed 13 May 2005 is being treated as a request for status pursuant to 37 CFR 1.42. No petition fee is required.

BACKGROUND

On 14 November 2003, applicant filed the international application, which claimed a priority date of 19 November 2002. A copy of the international application was communicated to the United States Patent and Trademark Office from the International Bureau on 03 June 2004. Pursuant to 37 CFR 1.495, the deadline for payment of the basic national fee in the United States was to expire 30 months from the priority date, 19 May 2005.

On 13 May 2005, applicant filed a transmittal letter for entry into the national stage in the United States accompanied by the requisite basic national fee, an English translation of the international application, an Information Disclosure Statement, an Application Data Sheet, a preliminary amendment and a combined declaration and power of attorney executed by Raquel Fernandez Escortell as legal representative to the estate of deceased sole inventor Albert Fernandez Mateu.

DISCUSSION

Pursuant to 37 CFR 1.42, first sentence:

"In case of the death of the inventor, the legal representative (executor, administrator, etc.) of the deceased inventor may make the necessary oath or

declaration, and apply for and obtain a patent."

The declaration filed 13 May 2005 was executed by Raquel Fernandez Escortell as legal representative to the estate of deceased sole inventor Albert Fernandez Mateu. However, the declaration is not in compliance with 37 CFR 1.497 (a)-(b) as the declaration is sets forth the residence, post office address and country of citizenship of only one individual. Under 37 CFR 1.497(b) the information must be provided for both the deceased inventor, Albert Fernandez Mateu and the legal representative, Raquel Fernandez Escortell:

If the person signing the oath or declaration is the legal representative of a deceased inventor, the oath or declaration shall also state that the person is a legal representative and the citizenship, residence and mailing address of the legal representative.

In addition, while the declaration identifies Ms. Escortell as the legal representative, it also lists her as the first inventor. A newly filed declaration should list Mr. Mateu as the inventor with his residence, post office address and country of citizenship and then separately list Ms. Escortell and her residence, post office address and country of citizenship.

CONCLUSION

Applicants' petition under 37 CFR 1.42 is **DISMISSED, without prejudice**.

Applicants are hereby afforded **TWO (2) MONTHS** from the mail date of this decision to file an oath or declaration in compliance with 37 CFR 1.497 (a)-(b). Any reconsideration request should include a cover letter entitled, "Renewed Petition Under 37 CFR 1.42." No additional petition fee is required. Extensions of time may be obtained under 37 CFR 1.136(a).

Any further correspondence with respect to this matter should be directed to Mail Stop PCT, Commissioner for Patents, Office of PCT Legal Administration, P.O. Box 1450, Alexandria, Virginia 22313-1450, with the contents of the letter marked to the attention of the Office of PCT Legal Administration.

Derek A. Putonen
Attorney Advisor
Office of PCT Legal Administration
Tel: (571) 272-3294
Fax: (571) 273-0459

#6

07 NOV 2005

UNITED STATES PATENT AND TRADEMARK OFFICE

Commissioner for Patents
United States Patent and Trademark Office
P.O. Box 1450
Alexandria, VA 22313-1450
www.uspto.gov

Richard M. Goldberg
25 East Salem Street
Suite 419
Hackensack, NJ 07601

In re Application of	:	
MATEU	:	
U.S. Application No.: 10/534,847	:	DECISION ON RENEWED
PCT No.: PCT/ES03/00579	:	
Int. Filing Date: 14 November 2003	:	REQUEST FOR STATUS
Priority Date: 19 November 2002	:	
Attorney Docket No.: 229/1/059	:	UNDER 37 CFR 1.42
For: DISPOSABLE PROTECTOR FOR THE	:	
SEAT RING OR UPPER PART OF A TOILET	:	

This decision is in response to the applicant's "Renewed Petition Under 37 C.F.R. 1.42" filed 04 November 2005 in the United States Patent and Trademark Office (USPTO). No petition fee is due.

BACKGROUND

On 29 September 2005, applicant was mailed a decision dismissing applicant's request for status pursuant to 37 CFR 1.42. Applicant was afforded two months to file any request for reconsideration.

On 04 November 2005, applicant filed the response considered herein.

DISCUSSION

37 CFR 1.42 When the Inventor is Dead, states, in part:

"In case of the death of the inventor, the legal representative (executor, administrator, etc.) of the deceased inventor may make the necessary oath or declaration, and apply for and obtain the patent."

The declaration submitted on 13 May 2005 was executed by Racquel Fernandez Escortell as legal representative to the estate of the deceased inventor, Albert Fernandez Mateu. However, the citizenship, residence and mailing address for the deceased inventor was missing. In addition, the declaration left the impression that Ms. Escortell was an inventor in the application. Applicant has presently filed an executed declaration signed by the legal representative which provides the above information for both the deceased inventor and his legal representative and details their respective roles in the application. Thus, it is appropriate to grant applicant's renewed petition at this time.

CONCLUSION

Applicant's renewed request for status under 37 CFR 1.42 is **GRANTED**.

This application will be given an international application filing date of 14 November 2003 and a date of **04 November 2005** under 35 U.S.C. 371(c)(1), (c)(2) and (c)(4).

This application is being returned to the DO/EO/US for processing in accordance with this decision.

Derek A. Putonen
Attorney Advisor
Office of PCT Legal Administration
Tel: (571) 272-3294
Fax: (571) 273-0459

UNITED STATES PATENT AND TRADEMARK OFFICE

Commissioner for Patents
United States Patent and Trademark Office
P.O. Box 1450
Alexandria, VA 22313-1450
www.uspto.gov

RICHARD M. GOLDBERG
25 EAST SALEM STREET
SUITE 419
HACKENSACK NJ 07601

COPY MAILED

MAR 23 2007

OFFICE OF PETITIONS

In re Application of	:
Albert Fernandes Mateu et al	:
Application No. 10/534,847	: DECISION GRANTING PETITION
Filed: November 4, 2005	: UNDER 37 CFR 1.137(b)
Attorney Docket No. 229/1/059	:

This is a decision on the petition under 37 CFR 1.137(b), filed November 17, 2006, to revive the above-identified application.

The petition is **GRANTED**.

The petition satisfies the conditions for revival pursuant to the provisions of 37 CFR 1.137(b) in that (1) the reply in the form of the issue and publication fee; (2) the petition fee; and (3) the required statement of unintentional delay have been received. Accordingly, the reply to the Notice of Allowance of July 12, 2006, is accepted as having been unintentionally delayed.

Telephone inquiries concerning this decision should be directed to the undersigned at (571) 272-3208.

This matter is being referred to Patent Publication.

Karen Creasy

Karen Creasy
Petitions Examiner
Office of Petitions

30 JUN 2006

UNITED STATES PATENT AND TRADEMARK OFFICE

Commissioner for Patents
United States Patent and Trademark Office
P.O. Box 1450
Alexandria, VA 22313-1450
www.uspto.gov

Lanxess Corporation
Law & Intellectual Property Department
111 Ridc Park West Drive
Pittsburgh PA 15275-1112

In re Application of	:	
BRUDER et al.	:	DECISION
Application No.: 10/534,849	:	
PCT No.: PCT/EP03/12280	:	
Int. Filing Date: 04 November 2003	:	
Priority Date: 15 November 2002	:	
Attorney's Docket No.: CH8351/LeA 36,481	:	
For: OPTICAL DATA STORE COMPRISING A CO	:	
PHTHALOCYANINE HAVING AN AXIAL	:	
SUBSTITUENT...INFORMATION LAYER	:	

This is a decision on the submission filed via facsimile transmission by applicants on 10 April 2006.

BACKGROUND

On 04 November 2003, applicants filed international application PCT/EP03/12280 which claimed a priority date of 15 November 2002 and designated the United States. A copy of the international application was communicated to the United States Patent and Trademark Office from the International Bureau on 03 June 2004. The thirty-month period for paying the basic national fee in the United States expired at midnight on 16 May 2005 (15 May 2005 being a Sunday).

On 13 May 2005, applicants filed, *inter alia*, a transmittal letter for entry into the national stage in the United States accompanied by, *inter alia*, the basic national fee.

On 28 September 2005, the United States Designated/Elected Office (DO/EO/US) mailed a NOTIFICATION OF MISSING REQUIREMENTS UNDER 35 U.S.C. 371 (Form PCT/DO/EO/905) indicating, *inter alia*, that an oath or declaration in compliance with 37 CFR 1.497(a)-(b) and the surcharge under 37 CFR 1.492(e) for providing the oath or declaration later than thirty months from the priority date were required.

On 12 October 2005, applicants filed a submission via facsimile transmission which was accompanied by, *inter alia*, a declaration of inventors and the surcharge under 37 CFR 1.492(e).

On 10 February 2006, a Notification was mailed indicating that the declaration of inventors filed 12 October 2005 was not in compliance with 37 CFR 1.497(a)-(b) because there was a difference in names in the first-named inventor between the published international application (Horst Bruder) and the declaration of inventors (Horst Berneth).

On 10 April 2006, applicants filed the instant submission via facsimile transmission.

DISCUSSION

The instant submission states that the published international application mistakenly indicated the first-named inventor as Horst BRUDER. On 27 April 2006, the International Bureau published a correction in which the first-named inventor is indicated as Horst BERNETH. Accordingly, the name of the first-named inventor is no longer an issue. However, the third-named inventor is indicated in the declaration of inventors filed 12 October 2005 as Winfried Haese but is indicated in the published international application and in the copy of the Request accompanying the submission filed 10 April 2006 as Wilfried Haese. Thus, the declaration of inventors is still not in compliance with 37 CFR 1.497(a)-(b). If the correct name is Wilfried Haese, it can be corrected either by submitting a new declaration of inventors signed by Wilfried Haese or by filing an Application Data Sheet. If the correct name is Winfried Haese, then the error must be explained.

CONCLUSION

Applicant is hereby given the time limit of **TWO (2) MONTHS** from the mail date of this communication in order to file a proper response.

Failure to timely file a proper response to this decision in a timely manner will result in abandonment of the application with regards to national stage prosecution in the United States.

Please direct further correspondence with respect to this matter to Mail Stop PCT, Commissioner for Patents, Office of PCT Legal Administration, P.O. Box 1450, Alexandria, Virginia 22313-1450, with the contents of the letter marked to the attention of the Office of PCT Legal Administration.

Daniel Stemmer
Legal Examiner
PCT Legal Affairs
Office of Patent Cooperation Treaty
Legal Administration
Telephone: (571) 272-3301
Facsimile: (571) 273-0459

#9

UNITED STATES PATENT AND TRADEMARK OFFICE

Commissioner for Patents
United States Patent and Trademark Office
P.O. Box 1450
Alexandria, VA 22313-1450
www.uspto.gov

19 SEP 2006

Lanxess Corporation
Law & Intellectual Property Department
111 Ridc Park West Drive
Pittsburgh PA 15275-1112

In re Application of	:	
BRUDER et al.	:	DECISION
Application No.: 10/534,849	:	
PCT No.: PCT/EP03/12280	:	
Int. Filing Date: 04 November 2003	:	
Priority Date: 15 November 2002	:	
Attorney's Docket No.: CH8351/LeA 36,481	:	
For: OPTICAL DATA STORE COMPRISING A CO	:	
PHTHALOCYANINE HAVING AN AXIAL	:	
SUBSTITUENT...INFORMATION LAYER	:	

This is a decision on the submission filed by applicants on 03 August 2006.

BACKGROUND

On 04 November 2003, applicants filed international application PCT/EP03/12280 which claimed a priority date of 15 November 2002 and designated the United States. A copy of the international application was communicated to the United States Patent and Trademark Office from the International Bureau on 03 June 2004. The thirty-month period for paying the basic national fee in the United States expired at midnight on 16 May 2005 (15 May 2005 being a Sunday).

On 13 May 2005, applicants filed, *inter alia*, a transmittal letter for entry into the national stage in the United States accompanied by, *inter alia*, the basic national fee.

On 28 September 2005, the United States Designated/Elected Office (DO/EO/US) mailed a NOTIFICATION OF MISSING REQUIREMENTS UNDER 35 U.S.C. 371 (Form PCT/DO/EO/905) indicating, *inter alia*, that an oath or declaration in compliance with 37 CFR 1.497(a)-(b) and the surcharge under 37 CFR 1.492(e) for providing the oath or declaration later than thirty months from the priority date were required.

On 12 October 2005, applicants filed a submission via facsimile transmission which was accompanied by, *inter alia*, a declaration of inventors and the surcharge under 37 CFR 1.492(e).

On 10 February 2006, a Notification was mailed indicating that the declaration of inventors filed 12 October 2005 was not in compliance with 37 CFR 1.497(a)-(b) because there was a difference in names in the first-named inventor between the published international application (Horst Bruder) and the declaration of inventors (Horst Berneth).

On 10 April 2006, applicants filed a submission via facsimile transmission indicating that the published international application mistakenly indicated the first-named inventor as Horst BRUDER.

On 30 June 2006, a decision was mailed indicating that on 27 April 2006, the International Bureau published a correction in which the first-named inventor is indicated as Horst BERNETH and thus the name of the first-named inventor was no longer an issue. However, the decision also noted that the third-named inventor is indicated in the declaration of inventors filed 12 October 2005 as Winfried Haese but is indicated in the published international application and in the copy of the Request accompanying the submission filed 10 April 2006 as Wilfried Haese. It was further noted that if the correct name is Wilfried Haese, it could be corrected either by submitting a new declaration of inventors signed by Wilfried Haese or by filing an Application Data Sheet.

On 03 August 2006, applicants filed the instant submission which was accompanied by an Application Data Sheet identifying the inventor as Wilfried Haese.

DISCUSSION

The response filed 03 August 2006 is a proper reply to the decision mailed 30 June 2006. The third-inventor's name is Wilfried Haese as indicated in the international publication and the Application Data Sheet filed 03 August 2006. The declaration of inventors filed 12 October 2005 is in compliance with 37 CFR 1.497(a)-(b).

CONCLUSION

This application is being forwarded to the National Stage Processing Branch of the Office of PCT Operations to continue national stage processing of the application.

Daniel Stemmer
Legal Examiner
PCT Legal Affairs
Office of Patent Cooperation Treaty
Legal Administration
Telephone: (571) 272-3301
Facsimile: (571) 273-0459

13 SEP 200

UNITED STATES PATENT AND TRADEMARK OFFICE

Commissioner for Patents
United States Patent and Trademark Office
P.O. Box 1450
Alexandria, VA 22313-1450
www.uspto.gov

Barry A. Stein
Caeser, Rivise, Bernstein, Cohen & Pokotilow
11th Floor, Seven Penn Center
1635 Market Street
Philadelphia, PA 19103-2212

In re Application of GRANT, Sidney Application No.: 10/534,852 PCT No.: PCT/GB03/02302 Int. Filing Date: 28 May 2003 Priority Date: 30 May 2002 Attorney Docket No.: S1011/20182 For: AN APPARATUS FOR DETERMINING REPLENISHMENT OF CHEMICALS	DECISION ON PETITION UNDER 37 CFR 1.137(b)

The petition to revive under 37 CFR 1.137(b) filed 13 May 2005 in the above-captioned application is hereby **GRANTED** as follows:

Applicant's statement that "the entire delay in filing the required reply from the due date for the reply until the filing of a grantable petition under 37 CFR 1.137(b) was unintentional" meets the requirements of 37 CFR 1.137(b)(3).

A review of the application file reveals that applicant has submitted the basic national fee and the requirements of 37 CFR 1.137(b) have been satisfied. Therefore, the request to revive the application abandoned under 35 U.S.C. 371(d) is granted as to the National stage in the United States of America.

This application is being returned to the United States Designated/Elected Office for processing in accordance with this decision.

Anthony Smith

Anthony Smith
Attorney-Advisor
Office of PCT Legal Administration
Tel.: 571-272-3298
Facsimile: 571-273-0459

UNITED STATES PATENT AND TRADEMARK OFFICE

Commissioner for Patents
United States Patent and Trademark Office
P.O. Box 1450
Alexandria, VA 22313-1450
www.uspto.gov

YOUNG & THOMPSON
745 SOUTH 23RD STREET
2ND FLOOR
ARLINGTON VA 22202

In re Application of: Zeoli, Filomena et al Serial No.: 10/534,866 Filed: May 12, 2005 Docket: 2520-1058 Title: DISPOSABLE SYRINGE WITH RETRACTILE NEEDLE	**Decision on Petition**

This is a decision on the petition filed Dec. 5, 2007 to withdraw holding of abandonment entered Nov. 30, 2007. This petition is being considered pursuant to 37 CFR 1.181. No fee is required.

The petition is **GRANTED**.

The application was held abandoned for failure to timely respond to the Office Action mailed on Apr. 6, 2007. Notice of abandonment was mailed on Nov. 30, 20077.

Petitioner asserts that a response to the Apr. 6, 2007 Office action was timely filed on Jul. 6, 2007. In response, the petitioner has enclosed a copy of the PTO stamped receipt bearing the date of Jul. 6, 2007 and copy of the originally filed communication.

37 CFR §1.8(b) states:

> In the event that correspondence is considered timely filed by being mailed or transmitted in accordance with paragraph (a) of this section, but not received in the U.S. Patent and Trademark Office after a reasonable amount of time has elapsed from the time of mailing or transmitting of the correspondence, or after the application is held to be abandoned, or after the proceeding is dismissed, terminated, or decided with prejudice, the correspondence will be considered timely if the party who forwarded such correspondence:
> (1) Informs the Office of the previous mailing or transmission of the correspondence promptly after becoming aware that the Office has no evidence of receipt of the correspondence;
> (2) Supplies an additional copy of the previously mailed or transmitted correspondence and certificate; and
> (3) Includes a statement which attests on a personal knowledge basis or to the satisfaction of the Director to the previous timely mailing or transmission. If the correspondence was sent by facsimile transmission, a copy of the sending unit's report confirming transmission may be used to support this statement.

In light of the evidence submitted and satisfied the provisions of 37 CFR § 1.8(b), there is no abandonment in fact. As such, the holding of abandonment is in error and is hereby vacated. Any inconvenience to the applicant is regrettable.

This application is being forwarded to the Supervisory Patent Examiner in Art Unit ~~3747~~ 3763 for appropriate action. Any inquiry regarding this decision should be directed to Henry C. Yuen, Special Programs Examiner at (571) 272-4856.

PETITION GRANTED

Karen M. Young

Karen M. Young, Director
Technology Center 3700

UNITED STATES PATENT AND TRADEMARK OFFICE

UNITED STATES DEPARTMENT OF COMMERCE
United States Patent and Trademark Office
Address: COMMISSIONER FOR PATENTS
P.O. Box 1450
Alexandria, Virginia 22313-1450
www.uspto.gov

YOUNG & THOMPSON
209 Madison Street
Suite 500
Alexandria, VA 22314

Mail Date: 04/20/2010

Applicant	: Filomena Zeoli	: DECISION ON REQUEST FOR
Patent Number	: 7578806	: RECALCULATION of PATENT
Issue Date	: 08/25/2009	: TERM ADJUSTMENT IN VIEW
Appliction No	: 10/534,866	: OF WYETH AND NOTICE OF INTENT TO
Filed	: 10/31/2005	: ISSUE CERTIFICATE OF CORRECTION
		:

The Request for Recalculation is **GRANTED** to the extent indicated.

The patent term adjustment has been determined to be **603** days. The USPTO will *sua sponte* issue a certificate of correction reflecting the amount of PTA days determined by the recalculation.

Prior to the issuance of the certificate of correction, the USPTO will afford patentee an opportunity to be heard and request reconsideration. Accordingly, patentee has **one month or thirty (30) days**, whichever is longer, to file a request for reconsideration of this patent term adjustment calculation. See 35 U.S.C. 154(b)(3)(B)(ii) and 37 CFR 1.322(a)(4). No extensions of time will be granted under 37 CFR 1.136.

Patentee should use document code PET.OP if electronically filing a request for reconsideration of this patent term adjustment calculation. The patentee must also include the information required by 37 CFR 1.705(b)(2) and the fee required by 37 CFR 1.18(e). If patentee does not file a timely request for reconsideration of this patent term adjustment calculation including the information required by 37 CFR 1.705(b)(2) and the fee required by 37 CFR 1.18(e), the USPTO will issue a certificate of correction reflecting the PTA determination noted above.

Patentee should be aware that in order to preserve the right to review in the United States District Court for the District of Columbia of the USPTO patent term adjustment determination, patentee must ensure that he or she also take the steps required under 35 U.S.C. 154(b)(4)(A) in a timely manner. Nothing in the request for recalculation should be construed as providing an alternative time frame for commencing a civil action under 35 U.S.C. 154(b)(4)(A).

Any questions concerning this decision should be directed to the Office of Patent Legal Administration at 571-272-7702.

20 SEP 2005

United States Patent and Trademark Office

20 SEP 2005

Commissioner for Patents
United States Patent and Trademark Office
P.O. Box 1450
Alexandria, VA 22313-1450
www.uspto.gov

Goodwin Procter LLP
103 Eisenhower Parkway
Roseland, NJ 07068

In re Application of	:	
Abdulkader	:	
Application No.: 10/534,896	:	
PCT No.: PCT/US03/34339	:	
Int. Filing Date: 28 October 2003	:	DECISION
Priority Date: 28 October 2002	:	
Attorney Docket No.: 103978-365-NP	:	
For: System And Method For Conducting	:	
Residential Financial Transaction	:	

The petition to revive under 37 CFR 1.137(b) filed 13 May 2005 in the above-captioned application is hereby **GRANTED** as follows:

Applicant states that "the entire delay in filing the required reply from the due date for the required reply until the filing of a grantable petition under 37 CFR 1.137(b) was unintentional." This statement is being accepted in satisfaction of 37 CFR 1.137(b)(3).

A review of the application file reveals that the basic national fee of $150.00 was provided. The required petition fee of $750.00 was also paid. Thus, the requirements of 37 CFR 1.137(b) have been satisfied. Therefore, the request to revive the application abandoned under 35 U.S.C. 371(d) is granted as to the National stage in the United States of America.

This application is being forwarded to the United States Designated/Elected Office for further processing, including the preparation and mailing of a Notification of Missing Requirements (Form PCT/DO/EO/905) requiring the submission of an oath or declaration in compliance with 37 CFR 1.497(a) and (b) and a surcharge under 37 CFR 1.492(h).

Leonard Smith
PCT Legal Examiner
PCT Legal Office

George M. Dombroske
PCT Legal Examiner
PCT Legal Office
Tel: (571) 272-3283
Fax: (571) 273-0459

15 SEP 2005

UNITED STATES PATENT AND TRADEMARK OFFICE

COMMISSIONER FOR PATENTS
UNITED STATES PATENT AND TRADEMARK OFFICE
P.O. BOX 1450
ALEXANDRIA, VA 22313-1450
www.uspto.gov

PERKINS COIE LLP
POST OFFICE BOX 1208
SEATTLE, WA 98111-1208

In re Application of JIAN	:	
U.S. Application No.: 10/534,898	:	
PCT Application No.: PCT/CN03/00933	:	DECISION
Int. Filing Date: 04 November 2003	:	
Priority Date Claimed: 12 November 2002	:	
Attorney Docket No.: 41941.8005.US02	:	
For: CARGO LIFTING DEVICE	:	

This is in response to applicant's "Petition for Revival of an International Application for Patent Designating the U.S. Abandoned Unintentionally Under 37 CFR 1.137(b)" filed 13 May 2005.

BACKGROUND

On 04 November 2003, applicant filed international application PCT/CN03/00933, which claimed priority of an earlier China application filed 12 November 2002. A copy of the international application was communicated to the USPTO from the International Bureau on 27 May 2004. The thirty-month period for paying the basic national fee in the United States expired on 12 May 2005.

International application PCT/CN03/00933 became abandoned as to the United States for failure to timely pay the basic national fee.

On 13 May 2005, applicant filed the present petition under 37 CFR 1.137(b).

DISCUSSION

Under 37 CFR 1.137(b), a petition requesting that an application be revived on the grounds of unintentional abandonment must be accompanied by: (1) the required reply unless previously filed, (2) the petition fee as set forth in 37 CFR 1.17(m), (3) a statement that the entire delay in filing the required reply from the due date for the reply until the filing of a grantable petition was unintentional, and (4) a terminal disclaimer if the application was filed before 08 June 1995.

With regard to item (1), applicant has provided the required reply under 35 U.S.C. 371.

With regard to item (2), applicant has provided the required petition fee.

With regard to item (3), applicant has provided the required statement.

With regard to item (4), because the international application was filed after 08 June 1995, no terminal disclaimer is required.

CONCLUSION

For the reasons above, the petition under 37 CFR 1.137(b) is GRANTED.

The application has an International Filing Date under 35 U.S.C. 363 of 04 November 2003, and a date under 35 U.S.C. 371(c)(1), (c)(2), and (c)(4) of 13 May 2005.

This application is being forwarded to the United States Designated/Elected Office (DO/EO/US) for further processing in accordance with this decision.

Bryan Tung
PCT Legal Examiner
Office of PCT Legal Administration

Telephone: 571-272-3303
Facsimile: 571-273-0459

UNITED STATES PATENT AND TRADEMARK OFFICE

#6

14 DEC 2006

Commissioner for Patents
United States Patent and Trademark Office
P.O. Box 1450
Alexandria, VA 22313-1450
www.uspto.gov

Russell D. Orkin
The Webb Law Firm
700 Koppers Building
436 Seventh Avenue
Pittsburgh, PA 15219-1845

In re Application of
BOONSTRA
Application No.: 10/534,902
PCT No.: PCT/NL03/00793
Int. Filing: 11 November 2003
Priority Date: 16 November 2002
Attorney Docket No.: 3985-051498
For: METHOD AND DEVICE FOR DETACHABLY FIXATING AN OBJECT

DECISION ON PETITION UNDER 37 CFR 1.181

This decision is issued in response to applicant's "Petition to Withdraw Holding of Abandonment Under 37 C.F.R. 1.181" filed in the United States Patent and Trademark Office (USPTO) on 10 November 2006. No Petition fee is required.

BACKGROUND

On 11 November 2003, applicants filed international application PCT/NL03/00793, which claimed a priority date 16 November 2002. Pursuant to 37 CFR 1.495, the period for paying the basic national fee in the United States expired 30 months from the priority date, 16 May 2005.

On 16 May 2005, applicants filed a transmittal for entry into the national stage in the United States, which accompanied by, inter alia: the requisite basic national fee as required by 35 U.S.C. 371(c)(1).

On 20 September 2005, the United States Designated/Elected Office mailed a Notification of Missing Requirements under 35 U.S.C. 371 (Form PCT/DO/EO/905) indicating that an oath or declaration in compliance with 37 CFR 1.497(a) and (b) must be filed. The notification set a two-month time limit in which to respond.

On 26 May 2006, the United States Designated/Elected Office mailed a Notification of Abandonment (Form PCT/DO/EO/909) indicating that the application is abandoned due to failure to respond to PCT/DO/EO/905.

On 10 November 2006, applicants filed the present petition under 37 CFR 1.181.

DISCUSSION

A review of application file reveal that application indicates that the Customer Number is **28289**, but it was inadvertently changed to 25363. As such the Form PCT/DO/EO/905 mailed 20 September 2005 should have been mailed to the correspondence address associated with the Customer Number **28289**, not 25363.

Applicant's petition and accompanying papers satisfy the requirements for granting applicant's petition. The holding of abandonment in this application is withdrawn.

CONCLUSION

For the reasons above, applicants' petition under 37 CFR 1.181 is GRANTED.

The Notification of Abandonment (Form PCT/DO/EO/909) mailed 26 May 2006 and the Notification of Missing Requirement (Form PCT/DO/EO/905) mailed 20 September 2005 are hereby VACATED.

This application is being returned to the DO/EO/US for processing in accordance with this decision.

Peter Kim
PCT Legal Administration Detailee
Tel.: 571-272-6095
Facsimile: 571-273-0459

Boris Milef
PCT Legal Examiner
Office of PCT Legal Administration

22 SEP 2005

UNITED STATES PATENT AND TRADEMARK OFFICE

Commissioner for Patents
United States Patent and Trademark Office
P.O. Box 1450
Alexandria, VA 22313-1450
www.uspto.gov

Nixon & Vanderhye P.C.
1100 North Glebe, 8th Floor
Arlington, VA 22201-4714

In re Application of
HALFON et al.
Application No.: 10/534,905
PCT No.: PCT/IB03/04884
Int. Filing Date: 09 October 2003
Priority Date: 09 October 2002
Attorney Docket No.: 3665-144
For: PYRROLIDINE DERIVATIVES FOR USE IN TREATING HEPATITIS C VIRUS INFECTION

DECISION ON PETITION
UNDER 37 CFR 1.137(b)

The petition to revive under 37 CFR 1.137(b) filed 16 May 2005 in the above-captioned application is hereby **GRANTED** as follows:

Applicant's statement that "the entire delay in filing the required reply from the due date for the reply until the filing of a grantable petition under 37 CFR 1.137(b) was unintentional" meets the requirements of 37 CFR 1.137(b)(3).

A review of the application file reveals that applicants have submitted the basic national fee and the requirements of 37 CFR 1.137(b) have been satisfied. Therefore, the request to revive the application abandoned under 35 U.S.C. 371(d) is granted as to the National stage in the United States of America.

This application is being forwarded to the United States Designated/Elected Office (US/DO/EO) for continued processing including the issuance of a Notification of Missing Requirements (Form PCT/DO/EO/905) indicating that an oath or declaration in compliance with 37 CFR 1.497(a)-(b) is required.

Anthony Smith

Anthony Smith
Attorney-Advisor
Office of PCT Legal Administration
Telephone: (571) 272-3298
Facsimile: (571) 273-0459

UNITED STATES PATENT AND TRADEMARK OFFICE

UNITED STATES DEPARTMENT OF COMMERCE
United States Patent and Trademark Office
Address: COMMISSIONER FOR PATENTS
P.O. Box 1450
Alexandria, Virginia 22313-1450
www.uspto.gov

APPLICATION NO.	FILING DATE	FIRST NAMED INVENTOR	ATTORNEY DOCKET NO.	CONFIRMATION NO.
10/534,909	11/16/2005	Anupam Trehan	RLL-308US	5762

7590 11/09/2007

RANBAXY INC.
600 COLLEGE ROAD EAST
SUITE 2100
PRINCETON, NJ 08540

EXAMINER
WOODWARD, MICHAEL P

ART UNIT	PAPER NUMBER
1615	

MAIL DATE	DELIVERY MODE
11/09/2007	PAPER

DECISION GRANTING PETITION UNDER 37 CFR 1.138(d)

The declaration of express abandonment is recognized

This is in response to the petition under 37 CFR 1.138(d), requesting for a refund of any previously paid search fee and excess claims fee in the above-identified application.

The petition is granted.

The express abandonment is recognized. Any previously paid search fee and excess claims fee are hereby refunded.

Telephone inquiries should be directed to the Office of Data Management at (571) 272-4200.

Patent Publication Branch
Office of Data Management

04 FC:1615 500.00 CR

05 FC:1614 200.00 CR

02 FC:1633 200.00 CR

Adjustment date: 11/14/2007 RCLEMONS
11/21/2005 MKAYPAGH 00000099 500912 10534909
01 FC:1617 130.00 CR

FORM PET651G (Rev. 08/07)

UNITED STATES PATENT AND TRADEMARK OFFICE

UNITED STATES DEPARTMENT OF COMMERCE
United States Patent and Trademark Office
Address: COMMISSIONER FOR PATENTS
P.O. Box 1450
Alexandria, Virginia 22313-1450
www.uspto.gov

APPLICATION NO.	FILING DATE	FIRST NAMED INVENTOR	ATTORNEY DOCKET NO.	CONFIRMATION NO.
10/534,909	11/16/2005	Anupam Trehan	RLL-308US	5762

26815 7590 11/13/2007
RANBAXY INC.
600 COLLEGE ROAD EAST
SUITE 2100
PRINCETON, NJ 08540

EXAMINER
WOODWARD, MICHAEL P

ART UNIT	PAPER NUMBER
1615	

MAIL DATE	DELIVERY MODE
11/13/2007	PAPER

Please find below and/or attached an Office communication concerning this application or proceeding.

The time period for reply, if any, is set in the attached communication.

Notice of Abandonment	Application No.	Applicant(s)	
	10/534,909	TREHAN ET AL.	
	Examiner	Art Unit	
	Woodward, Michael	1615	

-- The MAILING DATE of this communication appears on the cover sheet with the correspondence address--

This application is abandoned in view of:

1. ☐ Applicant's failure to timely file a proper reply to the Office letter mailed on _____.
   (a) ☐ A reply was received on _____ (with a Certificate of Mailing or Transmission dated _____), which is after the expiration of the period for reply (including a total extension of time of _____ month(s)) which expired on _____.
   (b) ☐ A proposed reply was received on _____, but it does not constitute a proper reply under 37 CFR 1.113 (a) to the final rejection.
   (A proper reply under 37 CFR 1.113 to a final rejection consists only of: (1) a timely filed amendment which places the application in condition for allowance; (2) a timely filed Notice of Appeal (with appeal fee); or (3) a timely filed Request for Continued Examination (RCE) in compliance with 37 CFR 1.114).
   (c) ☐ A reply was received on _____ but it does not constitute a proper reply, or a bona fide attempt at a proper reply, to the non-final rejection. See 37 CFR 1.85(a) and 1.111. (See explanation in box 7 below).
   (d) ☐ No reply has been received.

2. ☐ Applicant's failure to timely pay the required issue fee and publication fee, if applicable, within the statutory period of three months from the mailing date of the Notice of Allowance (PTOL-85).
   (a) ☐ The issue fee and publication fee, if applicable, was received on _____ (with a Certificate of Mailing or Transmission dated _____), which is after the expiration of the statutory period for payment of the issue fee (and publication fee) set in the Notice of Allowance (PTOL-85).
   (b) ☐ The submitted fee of $_____ is insufficient. A balance of $_____ is due.
   The issue fee required by 37 CFR 1.18 is $_____. The publication fee, if required by 37 CFR 1.18(d), is $_____.
   (c) ☐ The issue fee and publication fee, if applicable, has not been received.

3. ☐ Applicant's failure to timely file corrected drawings as required by, and within the three-month period set in, the Notice of Allowability (PTO-37).
   (a) ☐ Proposed corrected drawings were received on _____ (with a Certificate of Mailing or Transmission dated _____), which is after the expiration of the period for reply.
   (b) ☐ No corrected drawings have been received.

4. ☑ The letter of express abandonment which is signed by the attorney or agent of record, the assignee of the entire interest, or all of the applicants.

5. ☐ The letter of express abandonment which is signed by an attorney or agent (acting in a representative capacity under 37 CFR 1.34(a)) upon the filing of a continuing application.

6. ☐ The decision by the Board of Patent Appeals and Interference rendered on _____ and because the period for seeking court review of the decision has expired and there are no allowed claims.

7. ☐ The reason(s) below:

Rick Clemons ☐☐Administrative Assistant☐☐Art Unit: 3900

Petitions to revive under 37 CFR 1.137(a) or (b), or requests to withdraw the holding of abandonment under 37 CFR 1.181, should be promptly filed to minimize any negative effects on patent term.

UNITED STATES PATENT AND TRADEMARK OFFICE

UNITED STATES DEPARTMENT OF COMMERCE
United States Patent and Trademark Office
Address: COMMISSIONER FOR PATENTS
P.O. Box 1450
Alexandria, Virginia 22313-1450
www.uspto.gov

PHILIP S. JOHNSON
JOHNSON & JOHNSON
ONE JOHNSON & JOHNSON PLAZA
NEW BRUNSWICK, NJ 08933-7003

Mail Date: 04/20/2010

Applicant	: Marcus Patrick Carey	: DECISION ON REQUEST FOR
Patent Number	: 7628155	: RECALCULATION of PATENT
Issue Date	: 12/08/2009	: TERM ADJUSTMENT IN VIEW
Appliction No	: 10/534,930	: OF WYETH AND NOTICE OF INTENT TO
Filed	: 12/22/2005	: ISSUE CERTIFICATE OF CORRECTION
		:

The Request for Recalculation is **GRANTED** to the extent indicated.

The patent term adjustment has been determined to be **955** days. The USPTO will *sua sponte* issue a certificate of correction reflecting the amount of PTA days determined by the recalculation.

Prior to the issuance of the certificate of correction, the USPTO will afford patentee an opportunity to be heard and request reconsideration. Accordingly, patentee has **one month or thirty (30) days**, whichever is longer, to file a request for reconsideration of this patent term adjustment calculation. See 35 U.S.C. 154(b)(3)(B)(ii) and 37 CFR 1.322(a)(4). No extensions of time will be granted under 37 CFR 1.136.

Patentee should use document code PET.OP if electronically filing a request for reconsideration of this patent term adjustment calculation. The patentee must also include the information required by 37 CFR 1.705(b)(2) and the fee required by 37 CFR 1.18(e). If patentee does not file a timely request for reconsideration of this patent term adjustment calculation including the information required by 37 CFR 1.705(b)(2) and the fee required by 37 CFR 1.18(e), the USPTO will issue a certificate of correction reflecting the PTA determination noted above.

Patentee should be aware that in order to preserve the right to review in the United States District Court for the District of Columbia of the USPTO patent term adjustment determination, patentee must ensure that he or she also take the steps required under 35 U.S.C. 154(b)(4)(A) in a timely manner. Nothing in the request for recalculation should be construed as providing an alternative time frame for commencing a civil action under 35 U.S.C. 154(b)(4)(A).

Any questions concerning this decision should be directed to the Office of Patent Legal Administration at 571-272-7702.

20 OCT 2005

UNITED STATES PATENT AND TRADEMARK OFFICE

Commissioner for Patents
United States Patent and Trademark Office
P.O. Box 1450
Alexandria, VA 22313-1450
www.uspto.gov

Christopher W. Stamos
Goodwin/Proctor LLP
Exchange Place
53 State Street
Boston, MA 02109

In re Application of
KAPLO et al.
Application No.: 10/534,932
PCT No.: PCT/US03/33998
Int. Filing Date: 23 October 2003
Priority Date: 23 October 2002
Attorney Docket No.: TXT-001CP
For: PILE WEATHERSTRIPPING MANUFACTURING APPARATUS AND METHOD

DECISION ON PETITION UNDER 37 CFR 1.137(b)

The petition to revive under 37 CFR 1.137(b) filed 13 May 2005 in the above-captioned application is hereby **GRANTED** as follows:

Applicant's statement that "the entire delay in filing the required reply from the due date for the reply until the filing of a grantable petition under 37 CFR 1.137(b) was unintentional" meets the requirements of 37 CFR 1.137(b)(3).

A review of the application file reveals that applicant has submitted the basic national fee and the requirements of 37 CFR 1.137(b) have been satisfied. Therefore, the request to revive the application abandoned under 35 U.S.C. 371(d) is granted as to the National stage in the United States of America.

Deposit Account No. 07-1700 has been charged a $130.00 surcharge fee under 37 CFR 1.492(e) for supplying an oath or declaration later than 30 months from the earliest claimed priority date.

This application is being returned to the United States Designated/Elected Office for processing in accordance with this decision.

Anthony Smith

Anthony Smith
Attorney-Advisor
Office of PCT Legal Administration
Tel.: 571-272-3298
Facsimile: 571-273-0459

UNITED STATES PATENT AND TRADEMARK OFFICE

Commissioner for Patents
United States Patent and Trademark Office
P.O. Box 1450
Alexandria, VA 22313-1450
www.uspto.gov

MAILED

APR 13 2009

OFFICE OF PETITIONS

SCHLUMBERGER OILFIELD SERVICES
200 GILLINGHAM LANE
MD 200-9
SUGAR LAND TX 77478

In re Application of
Philip Head et al.
Application No. 10/534,936
Filed: May 31, 2006
Attorney Docket No. 21.1269

DECISION ON PETITION

This is a decision on the petition under the unintentional provisions of 37 CFR 1.137(b), filed February 24, 2009, to revive the above-identified application.

The petition is **GRANTED**.

This application became abandoned for failure to timely pay the issue and publication fees on or before February 3, 2009, as required by the Notice of Allowance and Fee(s) Due, mailed November 3, 2008. Accordingly, the date of abandonment is February 4, 2009.

The petition satisfies the requirements of 37 CFR 1.137(b) in that petitioner has supplied (1) the reply in the form of payment of the issue fee of $1,510.00 and the publication fee of $300.00, (2) the petition fee of $1,620.00; and (3) a proper statement of unintentional delay.

Telephone inquiries concerning this decision should be directed to JoAnne Burke at (571) 272-4584.

This application is being referred to Office of Data Management for processing into a patent.

Ramesh Krishnamurthy

Ramesh Krishnamurthy
Petitions Examiner
Office of Petitions

UNITED STATES PATENT AND TRADEMARK OFFICE

Commissioner for Patents
United States Patent and Trademark Office
P.O. Box 1450
Alexandria, VA 22313-1450
www.uspto.gov

Patrea L. Pabst
Pabst Patent Group, LLP
400 Colony Square, Suite 1200
1201 Peachtree Street
Atlanta, GA 30361

COPY MAILED

AUG 0 2 2007

OFFICE OF PETITIONS

In re Application of	:	
Andreas Lendlein et al.	:	
Application No. 10/534,937	:	DECISION ON PETITION
Filed: November 17, 2005	:	TO WITHDRAW
Attorney Docket No. MNE 108	:	FROM RECORD
	:	

This is a decision on the Request to Withdraw as attorney or agent of record under 37 C.F.R. § 1.36(b), filed April 11, 2007.

The request is **APPROVED**.

A grantable request to withdraw as attorney/agent of record must be signed by every attorney/agent seeking to withdraw or contain a clear indication that one attorney is signing on behalf of another/others. A request to withdraw will not be approved unless at least 30 (thirty) days would remain between the date of approval and the later of the expiration date of a time to file a response or the expiration date of the maximum time period which can be extended under 37 C.F.R. § 1.136(a).

The request was signed by Rivka D. Monheit on behalf of all attorneys/agents of record who are associated with customer No. 23579 . All attorneys/agents associated with the Customer Number 23579 have been withdrawn.

Applicant is reminded that there is no attorney of record at this time.

The request to change the correspondence of record is not acceptable as the requested correspondence address is not that of (1) the first named signing inventor; or (2) an intervening assignee of the entire interest under 37 C.F.R. 3.71. Accordingly, all correspondence will be mailed to the assignee. A courtesy copy of this decision will be mailed to Celine Crowson, Esq. with the firm of Hogan & Hartson, LLP as indicated in the request to withdraw. If the attorneys associated with this firm desire to receive future correspondence regarding this application, the proper power of attorney documents must be submitted.

There are no outstanding office actions at this time.

Telephone inquiries concerning this decision should be directed to Kimberly Inabinet at 571-272-4618.

Frances Hicks
Petitions Examiner
Office of Petitions

cc: Mnemoscience GMBH
Carlstrasse 50
Uebach-Palenberg, Germany D-52531

cc: Celine Crowson, Esq.
Hogan & Hartson, LLP
Columbia Square
555 Thirteenth Street
Washington, DC 20004

UNITED STATES PATENT AND TRADEMARK OFFICE

UNITED STATES DEPARTMENT OF COMMERCE
United States Patent and Trademark Office
Address: COMMISSIONER FOR PATENTS
P.O. Box 1450
Alexandria, Virginia 22313-1450
www.uspto.gov

APPLICATION NUMBER	FILING OR 371 (c) DATE	FIRST NAMED APPLICANT	ATTY. DOCKET NO./TITLE
10/534,937	11/17/2005	Andreas Lendlein	MNE 108

CONFIRMATION NO. 3650

OC000000025141602

23579
PATREA L. PABST
PABST PATENT GROUP LLP
400 COLONY SQUARE, SUITE 1200
1201 PEACHTREE STREET
ATLANTA, GA 30361

Date Mailed: 08/01/2007

NOTICE REGARDING CHANGE OF POWER OF ATTORNEY

This is in response to the Power of Attorney filed 04/11/2007.

- The withdrawal as attorney in this application has been accepted. Future correspondence will be mailed to the new address of record. 37 CFR 1.33.

Kimberly Gravinet
Office of Initial Patent Examination (571) 272-4000, or 1-800-PTO-9199
FORMER ATTORNEY/AGENT COPY

UNITED STATES PATENT AND TRADEMARK OFFICE

UNITED STATES DEPARTMENT OF COMMERCE
United States Patent and Trademark Office
Address: COMMISSIONER FOR PATENTS
P.O. Box 1450
Alexandria, Virginia 22313-1450
www.uspto.gov

BLAKELY SOKOLOFF TAYLOR & ZAFMAN LLP
1279 OAKMEAD PARKWAY
SUNNYVALE, CA 94085-4040

Mail Date: 04/21/2010

Applicant	: Craig B Gentry	: DECISION ON REQUEST FOR
Patent Number	: 7620606	: RECALCULATION of PATENT
Issue Date	: 11/17/2009	: TERM ADJUSTMENT IN VIEW
Appliction No	: 10/534,943	: OF WYETH AND NOTICE OF INTENT TO
Filed	: 05/13/2005	: ISSUE CERTIFICATE OF CORRECTION
		:

The Request for Recalculation is **GRANTED** to the extent indicated.

The patent term adjustment has been determined to be **1105** days. The USPTO will *sua sponte* issue a certificate of correction reflecting the amount of PTA days determined by the recalculation.

Prior to the issuance of the certificate of correction, the USPTO will afford patentee an opportunity to be heard and request reconsideration. Accordingly, patentee has **one month or thirty (30) days**, whichever is longer, to file a request for reconsideration of this patent term adjustment calculation. See 35 U.S.C. 154(b)(3)(B)(ii) and 37 CFR 1.322(a)(4). No extensions of time will be granted under 37 CFR 1.136.

Patentee should use document code PET.OP if electronically filing a request for reconsideration of this patent term adjustment calculation. The patentee must also include the information required by 37 CFR 1.705(b)(2) and the fee required by 37 CFR 1.18(e). If patentee does not file a timely request for reconsideration of this patent term adjustment calculation including the information required by 37 CFR 1.705(b)(2) and the fee required by 37 CFR 1.18(e), the USPTO will issue a certificate of correction reflecting the PTA determination noted above.

Patentee should be aware that in order to preserve the right to review in the United States District Court for the District of Columbia of the USPTO patent term adjustment determination, patentee must ensure that he or she also take the steps required under 35 U.S.C. 154(b)(4)(A) in a timely manner. Nothing in the request for recalculation should be construed as providing an alternative time frame for commencing a civil action under 35 U.S.C. 154(b)(4)(A).

Any questions concerning this decision should be directed to the Office of Patent Legal Administration at 571-272-7702.

UNITED STATES PATENT AND TRADEMARK OFFICE

Commissioner for Patents
United States Patent and Trademark Office
P.O. Box 1450
Alexandria, VA 22313-1450
www.uspto.gov

FRIEDRICH KUEFFNER
317 MADISON AVENUE SUITE 910
NEW YORK NY 10017

COPY MAILED

JUL 29 2009

OFFICE OF PETITIONS

In re Application of	:	
Heinrich, et al.	:	
Application No. 10/534,944	:	ON PETITION
Filed: May 13, 2005	:	
Attorney Docket No. HM-623PCT	:	

This is a decision on the petition under 37 CFR 1.137(a), filed June 30, 2009, to revive the above-identified application.

The petition under 37 CFR 1.137(a) is **DISMISSED**.

Any request for reconsideration of this decision must be submitted within TWO (2) MONTHS from the mail date of this decision. Extensions of time under 37 CFR 1.136(a) are permitted. The reconsideration request should include a cover letter entitled "Renewed Petition Under 37 CFR 1.137(b)." This is **not** a final agency decision within the meaning of 5 USC 704.

A grantable petition under 37 CFR 1.137(a) must be accompanied by: (1) the required reply, unless previously filed; (2) the petition fee as set forth in 37 CFR 1.17(m); (3) a showing that the entire delay in filing the required reply from the due date for the reply until the filing of a grantable petition pursuant to 37 CFR 1.137(a) was unavoidable; and (4) any terminal disclaimer (and fee as set forth in 37 CFR 1.20(d)) required by 37 CFR 1.137(d).

The instant petition lacks item (2), the petition fee. As the petition fee is a requirement for the consideration of the

petition, and not merely the granting of the petition, the petition will not be considered on the merits until such time as the petition fee is submitted. The petition fee for a petition to revive under 37 CFR 1.137(a) is currently $540. Petitioner submitted $130. No authorization to charge any fee deficiency to a deposit account was found. Accordingly, on renewed petition, petitioner must submit the balance of the petition fee due.

Further correspondence with respect to this matter should be addressed as follows:

By mail: Mail Stop Petitions
Commissioner for Patents
P.O. Box 1450
Alexandria VA 22313-1450

By FAX: (571)273-8300
Attn: Office of Petitions

Telephone inquiries concerning this decision should be directed to the undersigned at (571)272-3207.

Cliff Congo
Petitions Attorney
Office of Petitions

UNITED STATES PATENT AND TRADEMARK OFFICE

Commissioner for Patents
United States Patent and Trademark Office
P.O. Box 1450
Alexandria, VA 22313-1450
www.uspto.gov

FRIEDRICH KUEFFNER
317 MADISON AVENUE SUITE 910
NEW YORK NY 10017

COPY MAILED

SEP 28 2009

OFFICE OF PETITIONS

In re Application of Heinrich, et al. Application No. 10/534,944 Filed: May 13, 2005 Attorney Docket No. HM-623PCT	: : : : :	DECISION ON PETITION

This is in response to the renewed petition to revive under 37 CFR 1.137(a), filed August 20, 2009.

The petition under 37 CFR 1.137(a) is **DISMISSED**.

Any request for reconsideration of this decision must be submitted within **TWO (2) MONTHS** from the mail date of this decision. The reconsideration request should include a cover letter entitled "Renewed Petition under 37 CFR 1.137(a)". Extensions of time under 37 CFR 1.136(a) are permitted.

The above-identified application became abandoned for failure to timely pay the issue fee in response to the Notice of Allowance mailed on January 28, 2009. This Notice set a statutory period for reply of three (3) months. Applicants filed a PTOL-85b Issue Fee Transmittal Form on May 4, 2009, made timely by including a Certificate of Mailing dated April 28, 2009. However, when the Office attempted to charge the fee to counsel's credit card, the credit card was declined. As such, the application became abandoned on April 29, 2009. The Office mailed a Notice of Abandonment on May 28, 2009. Applicants filed a petition to revive under 37 CFR 1.137(a) on June 30, 2009. However, the petition was dismissed without being considered on the merits, because applicants did not submit the petition fee in full, in a decision mailed on July 29, 2009.

A grantable petition under 37 CFR 1.137(a) must be accompanied by: (1) the required reply, unless previously filed; (2) the petition fee as set forth in 37 CFR 1.17(l); (3) a showing to the satisfaction of the Commissioner that the entire delay in filing the required reply from the due date for the reply until the filing of a grantable petition pursuant to 37 CFR 1.137(a) was unavoidable; and (4) any terminal disclaimer (and fee as set forth in 37 CFR 1.20(d)) required pursuant to 37 CFR 1.137(c). The instant petition has not satisfied requirement (3) above.

With respect to item (3), decisions on reviving abandoned applications on the basis of "unavoidable" delay have adopted the reasonably prudent person standard in determining if the delay was unavoidable:

> The word 'unavoidable' . . . is applicable to ordinary human affairs, and requires no more or greater care or diligence than is generally used and observed by prudent and careful men in relation to their most important business. It permits them in the exercise of this care to rely upon the ordinary and trustworthy agencies of mail and telegraph, worthy and reliable employees, and such other means and instrumentalities as are usually employed in such important business. If unexpectedly, or through the unforeseen fault or imperfection of these agencies and instrumentalities, there occurs a failure, it may properly be said to be unavoidable, all other conditions of promptness in its rectification being present.[1]

Moreover, a petition cannot be granted where a petitioner has failed to meet his or her burden of establishing that the delay was "unavoidable."[2]

Here, petitioner explains that his credit card company implemented a random computer generated hold, and as such, did not make the funds available to the USPTO. Petitioner is requested on renewed petition to supply a written statement from the credit card company, explaining their hold procedure, as well as confirming that the procedure was implemented on petitioner's

---

[1] In re Mattullath, 38 App. D.C. 497, 514-15 (1912)(quoting Ex parte Pratt, 1887 Dec. Comm'r Pat. 31, 32-33 (1887)); see also Winkler v. Ladd, 221 F. Supp. 550, 552, 138 USPQ 666, 167-68 (D.D.C. 1963), aff'd, 143 USPQ 172 (D.C. Cir. 1963); Ex parte Henrich, 1913 Dec. Comm'r Pat. 139, 141 (1913).

[2] Haines v. Quigg, 673 F. Supp. 314, 316-17, 5 USPQ2d 1130, 1131-32 (N.D. Ind. 1987).

account during the applicable time period.

While the showing of record is not sufficient to establish to the satisfaction of the Commissioner that the delay was unavoidable, petitioner is **not** precluded from obtaining relief by filing a request for reconsideration pursuant to 37 CFR 1.137(b) on the basis of unintentional delay. A grantable petition pursuant to 37 CFR 1.137(b) must be accompanied by (1) The reply required to the outstanding Office action or notice, unless previously filed; (2) The petition fee as set forth in 37 CFR 1.17(m); (3) A statement that the entire delay in filing the required reply from the due date for the reply until the filing of a grantable petition pursuant to this paragraph was unintentional. The Commissioner may require additional information where there is a question whether the delay was unintentional; and (4) Any terminal disclaimer (and fee as set forth in 37 CFR 1.20(d)) required pursuant to paragraph (d) of this section.

Further correspondence with respect to this matter should be addressed as follows:

By mail: Mail Stop Petitions
Commissioner for Patents
P.O. Box 1450
Alexandria VA 22313-1450

By FAX: (571)273-8300
Attn: Office of Petitions

Telephone inquiries related to this decision should be directed to the undersigned at 571-272-3207.

Cliff Congo
Petitions Attorney
Office of Petitions

UNITED STATES PATENT AND TRADEMARK OFFICE

Commissioner for Patents
United States Patent and Trademark Office
P.O. Box 1450
Alexandria, VA 22313-1450
www.uspto.gov

FRIEDRICH KUEFFNER
317 MADISON AVENUE, SUITE 910
NEW YORK NY 10017

MAILED

FEB 0 4 2010

OFFICE OF PETITIONS

In re Application of	:	
Peter Heinrich, et al.	:	
Application No. 10/534,944	:	DECISION ON PETITION
Filed: May 13, 2005	:	
Attorney Docket No. HM-623PCT	:	

This is a decision on the petition under the unintentional provisions of 37 CFR 1.137(b), filed November 23, 2009, to revive the above-identified application.

The petition is **GRANTED**.

This application became abandoned for failure to timely pay the issue and publication fees on or before April 28, 2009, as required by the Notice of Allowance and Fee(s) Due, mailed January 28, 2009. Accordingly, the date of abandonment of this application is April 29, 2009. The Notice of Abandonment was mailed May 28, 2009.

The petition satisfies the requirements of 37 CFR 1.137(b) in that petitioner has supplied (1) the reply in the form of payment of the issue fee of $1,510 and the publication fee of $300, (2) the petition fee of $1,620; and (3) a proper statement of unintentional delay.

Telephone inquiries concerning this decision should be directed to Terri Johnson at (571) 272-2991.

This application is being referred to the Office of Data Management for processing into a patent.

Terri Johnson
Petitions Examiner
Office of Petitions

30 MAR 2006

UNITED STATES PATENT AND TRADEMARK OFFICE

Commissioner for Patents
United States Patent and Trademark Office
P.O. Box 1450
Alexandria, VA 22313-1450
www.uspto.gov

Richard L. Byrne
The Webb Law Firm
436 Seventh Avenue, 700 Koppers Building
Pittsburgh, PA 15219-1818

In re Application of	:	
LOGAN, et al.	:	
Application No.: 10/534,947	:	DECISION ON PETITION
PCT No.: PCT/AU03/01558	:	
Int. Filing Date: 21 November 2003	:	UNDER 37 CFR 1.10(c)
Priority Date: 22 November 2002	:	
Atty. Docket No.: 4623-051371	:	
For: COMPOSITE BEAMS	:	

This is a decision on applicant's "REQUEST FOR CORRECTED FILING RECEIPT" filed 24 March 2006 in the United States Patent and Trademark Office (USPTO). The request is being treated as a petition under 37 CFR 1.10. No petition fee is required.

BACKGROUND

On 21 November 2003, applicant filed international application PCT/AU03/01558 which claimed priority to an earlier Australian application filed 22 November 2002. A copy of the International Application was forwarded to the United States Patent and Trademark Office (USPTO) from the International Bureau (IB) on 10 June 2004. Pursuant to 37 CFR 1.495, the thirty-month period for paying the basic national fee in the United States expired at midnight on 22 May 2005.

On 16 May 2005, applicant filed a transmittal letter for entry into the national stage in the United States, which was accompanied by the requisite basic national fee as required by 35 U.S.C. 371(c)(1) and a preliminary amendment.

On 28 September 2005, applicant was mailed a NOTIFICATION OF MISSING REQUIREMENTS UNDER 35 U.S.C. 371 (Form PCT/DO/EO/905) informing applicant of the need to provide a signed oath or declaration of the inventors, in compliance with 37 CFR 1.497(a) and (b), identifying the application by the international application number and international filing date. Applicant was afforded two months to file the proper response.

On 31 October 2005, applicant responded with an executed combined declaration and power of attorney.

On 21 February 2006, applicant was mailed a "Notification of Acceptance" (Form PCT/DO/EO/903) indicating a 371 date of 31 December 2005.

On 24 March 2006, applicant filed the present petition and request for corrected filing receipt indicating that the papers at issue, satisfying the 35 U.S.C. 371 requirements, were filed 31 October 2005.

DISCUSSION

37 CFR 1.10(c) states: Any person filing correspondence under this section that was received by the Office and delivered by the "Express Mail Post Office to Addressee" service of the USPS, who can show that there is a discrepancy between the filing date accorded by the Office to the correspondence and the date of deposit as shown by the "date-in" on the "Express Mail" mailing label or other official USPS notation, may petition the Commissioner to accord the correspondence a filing date as of the "date-in" on the "Express Mail" mailing label or other official USPS notation, provided that:

(1) The petition is filed promptly after the person becomes aware that the Office has accorded, or will accord, a filing date other than the USPS deposit date;

(2) The number of the "Express Mail" mailing label was placed on the paper(s) or fee(s) that constitute the correspondence prior to the original mailing by "Express Mail;" and

(3) The petition includes a true copy of the "Express Mail" mailing label showing the "date-in," and of any other official notation by the USPS relied upon to show the date of deposit.

Applicant has satisfied all three items above. In addition, a review of the USPS track and confirm website shows a date of acceptance by the USPS of "10/31/05 4:06pm." Therefore, it is proper to grant applicant's petition at this time.

CONCLUSION

Applicant's petition under 37 CFR 1.10 is **GRANTED**.

The application will be given an international filing date of 21 November 2003 under 35 U.S.C. 363 and a date of **31 October 2005** under 35 U.S.C. 371(c)(1), (c)(2) and (c)(4).

The "Notification of Acceptance of Application Under 35 U.S.C. 371 and 37 CFR 1.494 or 1.495" (Form PCT/DO/EO/903) mailed 21 February 2006 indicating a date of 31 December 2005 under 35 U.S.C. 371(c)(1), (c)(2) and (c)(4) is hereby **VACATED**.

This application is being returned to the United States Designated/Elected Office (US/DO/EO) for further processing in accordance with this decision, namely the issuance of a "Notification of Acceptance of Application Under 35 U.S.C. 371 and 37 CFR 1.494 or 1.495" (Form PCT/DO/EO/903) and corrected filing receipt indicating the correct 371 date as detailed above.

Derek A. Putonen
Attorney Advisor
Office of PCT Legal Administration
Tel: (571) 272-3294
Fax: (571) 273-0459

28 OCT 2005

#5

UNITED STATES PATENT AND TRADEMARK OFFICE

COMMISSIONER FOR PATENTS
UNITED STATES PATENT AND TRADEMARK OFFICE
P.O. BOX 1450
ALEXANDRIA, VA 22313-1450
www.uspto.gov

LOWE HAUPTMAN GILMAN & BERNER, LLP
1700 DIAGNOSTIC ROAD, SUITE 300
ALEXANDRIA, VA 22314

In re Application of GOUNON	:	
U.S. Application No.: 10/534,968	:	
PCT Application No.: PCT/FR03/00746	:	
Int. Filing Date: 07 March 2003	:	
Priority Date Claimed: 08 March 2002	:	DECISION
Attorney Docket No.: 4590-399	:	
For: METHOD AND DEVICE FOR	:	
DETERMINING THE RELATIVE	:	
POSITION OF TWO POINTS	:	

This is in response to applicant's "Petition for Revival of an International Application for Patent Designating the U.S. Abandoned Unintentionally Under 37 CFR 1.137(b)" filed 16 May 2005.

BACKGROUND

On 07 March 2003, applicant filed international application PCT/FR03/00746, which claimed priority of an earlier France application filed 08 March 2002. A copy of the international application was communicated to the USPTO from the International Bureau on 18 September 2003. The thirty-month period for paying the basic national fee in the United States expired on 08 September 2004.

International application PCT/FR03/00746 became abandoned as to the United States for failure to timely pay the basic national fee.

On 16 May 2005, applicant filed the present petition under 37 CFR 1.137(b).

DISCUSSION

Under 37 CFR 1.137(b), a petition requesting that an application be revived on the grounds of unintentional abandonment must be accompanied by: (1) the required reply unless previously filed, (2) the petition fee as set forth in 37 CFR 1.17(m), (3) a statement that the entire

delay in filing the required reply from the due date for the reply until the filing of a grantable petition was unintentional, and (4) a terminal disclaimer if the application was filed before 08 June 1995.

With regard to item (1), applicant has provided the required reply under 35 U.S.C. 371.

With regard to item (2), applicant has provided the required petition fee.

With regard to item (3), applicant has provided the required statement.

With regard to item (4), because the international application was filed after 08 June 1995, no terminal disclaimer is required.

CONCLUSION

For the reasons above, the petition under 37 CFR 1.137(b) is GRANTED.

The application has an International Filing Date under 35 U.S.C. 363 of 07 March 2003, and a date under 35 U.S.C. 371(c)(1), (c)(2), and (c)(4) of 16 May 2005.

This application is being forwarded to the United States Designated/Elected Office (DO/EO/US) for further processing in accordance with this decision.

Bryan Tung
PCT Legal Examiner
Office of PCT Legal Administration

Telephone: 571-272-3303
Facsimile: 571-273-0459

18 OCT 2005

UNITED STATES PATENT AND TRADEMARK OFFICE

Commissioner for Patents
United States Patent and Trademark Office
P.O. Box 1450
Alexandria, VA 22313-1450
www.uspto.gov

GREENBLUM & BERNSTEIN, P.L.C.
1950 ROLAND CLARKE PLACE
RESTON VA 20191

In re Application of	:	
ALBRECHT, Harald et al.	:	
Application No.: 10/534,970	:	DECISION
PCT No.: PCT/EP03/07704	:	
Int. Filing Date: 16 July 2003	:	ON PETITION UNDER
Priority Date: 07 August 2002	:	
Docket No.: P278490	:	37 CFR 1.137(b)
For: MILD CLEANING PREPARATION	:	

Applicants' "Petition For Revival of an Application For Patent Unintentionally Abandoned Under 37 C.F.R. 1.137(b)," filed in the above-captioned application on 16 May 2005 is **GRANTED**.

Applicants' statement that the delay was unintentional is construed to mean "the entire delay in filing the required reply from the due date for the required reply until the filing of a grantable petition under 37 CFR 1.137(b) was unintentional," as required by 37 CFR 1.137(b)(3). If this understanding is not correct, applicants must notify the office immediately. The appropriate national fee and petition fee have been submitted. A terminal disclaimer is not required as the application was filed on or after 08 June 1995. Accordingly, all requirements under 37 CFR 1.137(b) have been satisfied.

A signed oath or declaration has not yet been submitted. The surcharge for late furnishing of the search fee, examination fee or declaration will be charged to deposit account no. 19-0089, as authorized. The declaration submitted in the international phase under Rule 4.17 does not satisfy 37 CFR 1.497(a)-(b), as it was submitted under Rule 26*ter*, but did not identify the application to which it was directed.

This application is being forwarded to the National Stage Processing Branch of the Office of PCT Operations for continued processing in accordance with this decision, including the mailing of a Notification of Missing Requirements (Form PCT/DO/EO/905) indicating that an oath or declaration in compliance with 37 CFR 1.497(a)-(b), an English translation of the application and the processing fee for late furnishing of the translation are required.

Erin P. Thomson

Erin P. Thomson
Attorney Advisor
PCT Legal Administration

Telephone: 571-272-3292
Facsimile: 571-273-0459

30 AUG 2005

#6

UNITED STATES PATENT AND TRADEMARK OFFICE

COMMISSIONER FOR PATENTS
UNITED STATES PATENT AND TRADEMARK OFFICE
P.O. BOX 1450
ALEXANDRIA, VA 22313-1450
www.uspto.gov

ALDO NOTO
ANDREWS KURTH LLP
1701 PENNSYLVANIA AVENUE, N.W.
SUITE 300
WASHINGTON, DC 20006

In re Application of LI et al	:
Application No.: 10/534,978	:
PCT Application No.: PCT/US03/35919	:
Int. Filing Date: 12 November 2003	: DECISION ON PETITION
Priority Date Claimed: 12 November 2002	: UNDER 37 CFR 1.137(b)
Attorney Docket No.: 159976	:
For: METHODS AND COMPOSITIONS FOR	:
DETECTING TELOMERASE ACTIVITY	:

Applicants' Petition For Revival Under 37 CFR 1.137(b), filed in the United States Patent and Trademark Office (PTO) on 16 May 2005 is GRANTED.

BACKGROUND

On 12 November 2003, applicants filed international application PCT/US03/35919. The international application claims a priority date of 12 November 2002 and designates the United States. The deadline for paying the basic national fee in the United States was thirty months from the priority date, that is 12 May 2005. Applicants missed this deadline.

On 16 May 2005, applicants filed the instant petition for revival accompanied by, *inter alia*, the requisite basic national fee as required by 35 U.S.C. 371(c)(1) and the petition fee of $1500.

DISCUSSION

A petition to revive an abandoned application under 37 CFR 1.137(b) must be filed without intentional delay from the time the application became abandoned and/or applicant first became aware of the abandoned status of the application. A petition under 37 CFR 1.137(b) must be accompanied by (1) a proper reply, (2) a statement that the entire delay in filing the required reply

from the due date for the reply until the filing of a grantable petition was unintentional, (3) the petition fee required by law, and (4) a terminal disclaimer and fee (if the international application was filed prior to June 8, 1995). A payment of the basic national fee constitutes a proper reply for entry into the national stage.

Applicant's statement in the petition that "the entire delay in filing the required transmittal letter from the due date for the required transmittal letter until the filing of a grantable petition under 37 CFR §1.137(b) was unintentional" is being construed as indicating that the entire delay in filing the required *reply* was unintentional, thus meeting the requirements of 37 CFR 1.137(b)(3). If this interpretation is not correct, applicant should immediately notify the Office of PCT Legal Administration. The submission of the national fee satisfies 37 CFR 1.137(b)(1). The payment of the petition fee satisfies the requirement under 37 CFR 1.137(b)(2). A terminal disclaimer is not required because the application was filed on or after 08 June 1995. Therefore, the requirements for a grantable petition under 37 CFR 1.137(b) have been satisfied.

CONCLUSION

The petition to revive the application abandoned under 37 CFR 1.137(b) is GRANTED as to the National Stage in the United States of America.

The application is being returned to the National Stage Processing Division of the Office of PCT Operations for continued processing consistent with this decision.

Amy Vanatta
PCT Legal Administration Detailee
Telephone: 571-272-6094
Facsimile: 571-273-0419

Boris Milef
PCT Legal Examiner
Office of PCT Legal Administration

UNITED STATES PATENT AND TRADEMARK OFFICE

UNITED STATES DEPARTMENT OF COMMERCE
United States Patent and Trademark Office
Address: COMMISSIONER FOR PATENTS
P O. Box 1450
Alexandria, Virginia 22313-1450
www.uspto.gov

APPLICATION NO.	FILING DATE	FIRST NAMED INVENTOR	ATTORNEY DOCKET NO.	CONFIRMATION NO.
10/534,988	05/16/2005	Lasse Leino	OHMAN-002	1914

32954 7590 02/24/2009
JAMES C. LYDON
100 DAINGERFIELD ROAD
SUITE 100
ALEXANDRIA, VA 22314

EXAMINER
SIMMONS, CHRIS E

ART UNIT	PAPER NUMBER
1612	

MAIL DATE	DELIVERY MODE
02/24/2009	PAPER

Please find below and/or attached an Office communication concerning this application or proceeding.

The time period for reply, if any, is set in the attached communication.

UNITED STATES PATENT AND TRADEMARK OFFICE

Commissioner for Patents
United States Patent and Trademark Office
P.O. Box 1450
Alexandria, VA 22313-1450
www.uspto.gov

FEB 2 4 2009

JAMES C. LYDON
100 DAINGERFIELD ROAD
SUITE 100
ALEXANDRIA VA 22314

In re Application of:	:
Leino et al.	:
Serial No.: 10/534,988	: PETITION DECISION
Filed: May 16, 2005	:
Attorney Docket No.: **OHMAN-002**	:

This is in response to the petition filed January 30, 2009 under 37 CFR § 1.181, requesting that the finality of the Office action of December 1, 2008 be withdrawn.

BACKGROUND

More recently, the examiner mailed a final Office action on May 2, 2008. In this action, the examiner rejected claims 16, 19-22, and 28-30 under 35 U.S.C. 103(a) as unpatentable over USP 5,494,676 in view of WO 02/07520. Claims 16, 19-22, and 28-30 were rejected under 35 USC 103(a) as being unpatentable over Ben-Basset et al. in view of WO 02/07520. Claims 16, 19-22, and 28-30 were provisionally rejected on the ground of nonstatutory obviousness-type double patenting over copending application No. 11/408,056 in view of Granstein Psoriasis. Claims 16, 19-22, and 28-30 were also provisionally rejected on the ground of nonstatutory obviousness-type double patenting over copending application No. 10/565,202 in view of Granstein Psoriasis.

On September 2, 2008, applicant filed a Request for Continued Examination (RCE) along with the appropriate fees. In this RCE, applicant specifically fulfilled the requirements of 37 C.F.R. § 1.114 (submission) by indicating that the submission was filed on September 2, 2008 and that said submission, containing claim amendments was to be considered for examination.

On December 1, 2008, the examiner mailed a final Office action setting a three month statutory limit for reply. In this action, the examiner rejected claims 16, 19-22, and 28-30 under 35 U.S.C. 103(a) as unpatentable over USP 5,494,676 in view of WO 02/07520. Claims 16, 19-22, and 28-30 were rejected under 35 USC 103(a) as being unpatentable over Ben-Basset et al. in view of WO 02/07520. Claims 16, 19-22, and 28-30 were provisionally rejected on the ground of nonstatutory obviousness-type double patenting over copending application No. 11/408,056 in view of Granstein Psoriasis.

In response thereto, applicants filed this petition on January 30, 2009 under 37 CFR § 1.181, requesting that the finality of the Office action of December 1, 2008 be withdrawn.

DISCUSSION

The petition and the file history have been carefully considered.

In the petition filed on January 30, 2009, applicants argue that the final Office action instituted by the Examiner on December 1, 2008 was improper and should be withdrawn because MPEP § 706.07(b) does not apply to this situation, and clear issues have not yet been developed between the examiner and the applicants.

To support these contentions, applicants argue that "MPEP 706.07(b) permits an examiner to finally reject an application immediately after the filing of an RCE only in the situation where the claims were not amended, i.e. where all of the claims in the application after entry of the submission under 37 C.F.R. § 1.114(a) are drawn to the same invention claimed in the application prior to entry of the submission under 37 C.F.R. §1.114". Applicants then point out that all of the claims in the instant application after entry of the amendment are drawn to a different invention than that claimed in the application prior to entry of the amendment and that MPEP § 706.07(b) is simply not applicable in the instant application. This point is not persuasive as the limitation added to the claim is an inherent property of the composition. Thus, it is proper to finally reject the claims in the action immediately subsequent to the filing of the RCE since the claims are drawn to the same invention claimed in the application prior to the entry of the submission under 37 CFR 1.114 and would have been properly finally rejected on the grounds and art of record in the next Office action if they had been entered in the application prior to the filing of the RCE as set forth in MPEP§ 706.07(b).

Applicants further argue that no clear issue has been developed between the examiner and the applicants. Again, this is not agreed with as the rejections set forth in the final Office action of December 1, 2008 were maintained from the previous Office action of May 2, 2008 and therefore, the examiner's position is deemed clear.

Accordingly, applicants' arguments are not found persuasive that the final Office action issued December 1, 2008 was premature and, therefore, finality of the Office action will not be withdrawn.

DECISION

The petition is **DENIED.**

This application will be forwarded to the examiner for an action not inconsistent with this decision.

Should there be any questions about this decision please contact Marianne C. Seidel, by letter addressed to Director, TC 1600, at the address listed above, or by telephone at 571-272-0584 or by facsimile sent to the general Office facsimile number, 703-872-9306.

Andrew Wang
Acting Director, Technology Center 1600

UNITED STATES PATENT AND TRADEMARK OFFICE

OCT 17 2006

Commissioner for Patents
United States Patent and Trademark Office
P.O. Box 1450
Alexandria, VA 22313-1450
www.uspto.gov

ELI LILLY AND COMPANY
PATENT DIVISION
P. O. BOX 6288
INDIANAPOLIS, IN 46206-6288

In re Application of	:
Mary M. Mader et al	:
Serial No.: 10/535,002	: PETITION DECISION
Filed: May 12, 2005	:
Attorney Docket No.: X-16114	:

This is in response to the petition under 37 CFR 1.144, filed August 2, 2006, requesting withdrawal of an improper Lack of Unity requirement.

BACKGROUND

A review of the file history shows that this application was filed under 35 U.S.C. 371 and was accepted on May 12, 2005, and contained claims1-5. In a first Office action, mailed May 16, 2006, the examiner set forth a Lack of Unity requirement based on Formula 1, as follows:

Formula 1: 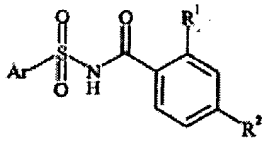

Group I, claims 1-3 and 5, drawn to compounds of Formula 1 with Ar defined as 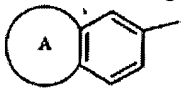 , and A is phenyl, cyclopentadienyl, cyclobutyl or cyclopentyl;

Group II, claims 1-3 and 5, drawn to compounds of Formula 1 with Ar defined as 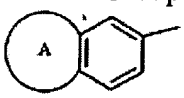 , and A is benzofuryl;

Group III, claims 1-3 and 5, drawn to compounds of Formula 1 where Ar is benzothien-2-yl, benzothien-5-yl or benzothien-6-yl;

Group IV, claims 1-3 and 5, drawn to compounds of Formula 1 where Ar is thieno[3,2-b]pyridine-2-yl;

Group V, claims 1-3 and 5, drawn to compounds of Formula 1 where Ar is 1-(C_{1-6} alkyl)indol-2-yl; and

Group VI, claim 4, drawn to a method of use of the compounds of claim 1.

The examiner cautioned that the above list was not exhaustive and allowed applicants to elect an invention different from those listed. (The listing failed to include the benzodioxins, benzodioxols, indolinyls, benzothiazolyls and benzofuryls.) The examiner reasoned that Unity of Invention was lacking inasmuch as the structure of Formula 1 did not define over the prior art (see e.g. 6,235,680). Also, that the compounds are differently classified and result in vastly different searches. The examiner advised of the possibility of rejoinder of the method of making claims if compound claims were elected and found allowable.

Applicants replied on June 16, 2006, electing, with traverse, Group III. Applicants argued that the Lack of Unity set forth did not follow the guidelines set forth in the PCT Rules and requested that it be withdrawn. Applicants alleged that the examiner failed to properly determine the special technical feature under the PCT Markush group guidelines. Further that the method of use claims should have been considered with the composition/compound claims in accordance with PCT guidelines.

In the next Office action mailed to applicants on July 14, 2006, the examiner maintained the Lack of Unity requirement for the reasons set forth, again stating that there was no special technical feature which defined over the prior art, but did not make it Final. Also that the Ar variable controls classification and each variable it represents is classified differently. The examiner then indicated that the compounds defined by elected Group III were allowable over the prior art and that Claim 4 would not be rejoined as it was drawn to non-elected subject matter.

Applicants filed this petition on August 2, 2006, basically repeating the arguments presented to the examiner.

DISCUSSION

Although the Lack of Unity requirement has not been made Final, it has been repeated by the examiner and the petition is properly filed.

Applicants argue that the examiner has failed to properly follow PCT guidelines in determining Lack of Unity by failing to determine the proper significant structural element. Applicants state that all of the claims are directed to compounds having as a core structure a 2,4-disubstituted benzoylsulfonamide, as shown here:

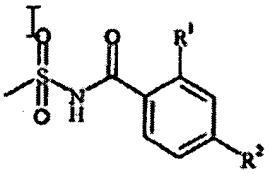

As shown, this differs from Formula 1 above only in lacking the Ar group and is found in all of the compounds, as stated by applicants. Applicants also quote the PCT guidelines for determining Unity of invention for Markush Groups, which are:

> (f)(i) When the Markush grouping is for alternatives of chemical compounds, they shall be regarded as being of a similar nature where the following criteria are fulfilled:
> (A) all alternatives have a common property or activity, and
> (B)(1) a common structure is present, i.e., a significant structural element is shared by all of the alternatives, or
> (B)(2) in cases where the common structure cannot be the unifying criteria, all alternatives belong to a recognized class of chemical compounds in the art to which the invention pertains.
> (ii) In paragraph (f)(i)(B)(1), above, the words "significant structural element is shared by all of the alternatives" refer to cases where the compounds share a common chemical structure which occupies a large portion of their structures, or in case the compounds have in common only a small portion of their structures, the commonly shared structure constitutes a structurally distinctive portion in view of existing prior art, and the common structure is essential to the common property or activity. The structural element may be a single component or a combination of individual components linked together.
> (iii) In paragraph (f)(i)(B)(2), above, the words "recognized class of chemical compounds" mean that there is an expectation from the knowledge in the art that members of the class will behave in the same way in the context of the claimed invention. In other words, each member could be substituted one for the other, with the expectation that the same intended result would be achieved.
> (iv) The fact that the alternatives of a Markush grouping can be differently classified shall not, taken alone, be considered to be justification for a finding of a lack of unity of invention.
> (v) When dealing with alternatives, if it can be shown that at least one Markush alternative is not novel over the prior art, the question of unity of invention shall be reconsidered by the examiner. Reconsideration does not necessarily imply that an objection of lack of unity shall be raised.

In this particular instance the benzoylsulfonamide group could be considered to constitute the significant structural element as it does occupy a large portion of the compound structure. However, this group is extremely well known and appears in many prior art references as the basis of sulfa drugs, etc., or as a significant structural element to which some type of group is attached in the Ar position. Thus it does not itself make a contribution over the prior art, but as noted above is not required to do so. Further, consideration of what Ar can be – a fused heterocyclic or non-heterocyclic structure – shows that it would be nearly as large as the benzoylsulfonamide common structure. Additionally, as applicants assert that the compounds have a common activity, it devolves that that activity must be associated with the common core or structure, which, as has been noted above, is extremely well known. However, there appears to be no indication that benzoylsulfonamides possess the antitumor activity claimed herein in the prior art which leads to the presumption that the activity is provided by the Ar substituents. In view of this conclusion Lack of Unity does exist between the different Ar groups attached to the benzoylsulfonamide structure.

Applicants' arguments with respect to the examiner's arguments regarding different classifications and search requirements are accepted. However they are not sufficient to overcome the above presumption that the common property or activity asserted lies in the Ar substituent, not the benzoylsulfonamide common structure.

The examiner has indicated potential rejoinder of the method claim of Group VI with allowed claims. Such rejoinder is now appropriate for the compounds of elected Group III which appear to have been indicated as allowable.

DECISION

The petition is **GRANTED-IN-PART.** The restriction requirement between Groups I-V is maintained. Group VI (claim 4) will be rejoined with the elected compounds of Group III.

Applicants remain under obligation to reply to the Office action of July 14, 2006, within the time period set therein, or as extended under 37 CFR 1.136(a).

Should there be any questions about this decision please contact William R. Dixon, Jr., by letter addressed to Director, TC 1600, at the address listed above, or by telephone at 571-272-0519 or by facsimile sent to the general Office facsimile number, 571-273-8300.

George C. Elliott

George C. Elliott
Director, Technology Center 1600

UNITED STATES PATENT AND TRADEMARK OFFICE

JAN 14 2007

Commissioner for Patents
United States Patent and Trademark Office
P.O. Box 1450
Alexandria, VA 22313-1450
www.uspto.gov

ELI LILLY AND COMPANY
PATENT DIVISION
P. O. BOX 6288
INDIANAPOLIS, IN 46206-6288

In re Application of	:
Mary M. Mader et al	:
Serial No.: 10/535,002	: PETITION DECISION
Filed: May 12, 2005	:
Attorney Docket No.: X-16114	:

This is in response to the petition under 37 CFR 1.144, filed November 3, 2006, requesting review of the petition decision mailed October 17, 2006.

BACKGROUND

A review of the file history is set forth in the previous decision and is not repeated here. Applicants have filed this petition seeking modification of the previous petition decision based on the understanding of Lack of Unity standards set forth in the PCT Administrative guidelines and also refer to a presentation of the Technology Center made November 15, 2001.

DISCUSSION

Applicants argue that the decision does not follow PCT guidelines in determining Lack of Unity. As noted in the pervious decision, "applicants state that all of the claims are directed to compounds having as a core structure a 2,4-disubstituted benzoylsulfonamide, as shown here:

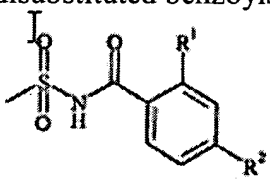

As shown, this differs from Formula 1, in claim 1, only in lacking the Ar group and is found in all of the compounds, as stated by applicants." Applicants again quote the PCT guidelines for determining Unity of invention for Markush Groups, which are:

> (f)(i) When the Markush grouping is for alternatives of chemical compounds, they shall be regarded as being of a similar nature where the following criteria are fulfilled:
>
> (A) all alternatives have a common property or activity, and

(B)(1) a common structure is present, i.e., a significant structural element is shared by all of the alternatives, or

(B)(2) in cases where the common structure cannot be the unifying criteria, all alternatives belong to a recognized class of chemical compounds in the art to which the invention pertains.

(ii) In paragraph (f)(i)(B)(1), above, **the words "significant structural element is shared by all of the alternatives" refer to cases where the compounds share a common chemical structure which occupies a large portion of their structures**, or in case the compounds have in common only a small portion of their structures, the commonly shared structure constitutes a structurally distinctive portion in view of existing prior art, **and the common structure is essential to the common property or activity**. The structural element may be a single component or a combination of individual components linked together.

(iii) In paragraph (f)(i)(B)(2), above, the words "recognized class of chemical compounds" mean that there is an expectation from the knowledge in the art that members of the class will behave in the same way in the context of the claimed invention. In other words, each member could be substituted one for the other, with the expectation that the same intended result would be achieved.

(iv) The fact that the alternatives of a Markush grouping can be differently classified shall not, taken alone, be considered to be justification for a finding of a lack of unity of invention.

(v) When dealing with alternatives, if it can be shown that at least one Markush alternative is not novel over the prior art, the question of unity of invention shall be reconsidered by the examiner. Reconsideration does not necessarily imply that an objection of lack of unity shall be raised.

The previous decision states: "In this particular instance the benzoylsulfonamide group could be considered to constitute the significant structural element as it does occupy a large portion of the compound structure. However, this group is extremely well known and appears in many prior art references as the basis of sulfa drugs, etc., or as a significant structural element to which some type of group is attached in the Ar position. Thus it does not itself make a contribution over the prior art, but as noted above is not required to do so. Further, consideration of what Ar can be – a fused heterocyclic or non-heterocyclic structure – shows that it would be nearly as large as the benzoylsulfonamide common structure. Additionally, as applicants assert that the compounds have a common activity, it devolves that that activity must be associated with the common core or structure (see highlighted portion above), which, as has been noted above, is extremely well known and used in many different pharmaceutical applications. However, there appears to be no indication that benzoylsulfonamides possess the antitumor activity claimed herein in the prior art which leads to the presumption that the activity is provided by the Ar substituents. In view of this conclusion Lack of Unity does exist between the different Ar groups attached to the benzoylsulfonamide structure."

Applicants' arguments with respect to the above statement are based on the presentation, particularly slides 29 and 30 which refer to Example 18 of what was then Annex B of the Administrative Instructions for PCT. (This has been revised and is now part of Chapter 10 of the PCT Search and Examination Guidelines, however Example 18 remains the same.) It is noted that the examples set forth therein are to illustrate principles related to determination of Unity and are not to be taken literally. The example states that the indole moiety is the significant structural element shared by all alternatives. And since the same utility is alleged unity is presumed to be present. However, a caveat is given in the presentation that since the indole structure is well known and does not make a contribution over the art Lack of Unity **may** be held The example presumes that the common utility or activity is in the core indole structure, not the variables bonded to it. Note also that the indole structure is the major portion of all of the structures represented, but is so well known that it does not form a "special technical feature" which makes a contribution over the art, even though the common property or activity is associated with it.

A similar situation exists here, although perhaps not clearly expressed in the previous decision. The benzoylsulfonamide structure is a structure common to all members of the Markush group and possesses pharmaceutical activity (as it is the basis for many sulfa drugs). However, antitumor activity is not a known utility for benzoylsulfonamides. Therefore the benzoylsulfonamide structure does not provide Unity of Invention to the compounds of the Markush group because it does not possess the utility claimed. It was also noted that the Ar portion of the structure, which presumably provides the antitumor activity, is of relatively the same size, or occupies a similar large portion of the structure, but is variable and the structures encompassed by Ar do not have Unity of Invention due to their wide diversity. Here again, even if the benzoylsulfonamide structure is considered to represent the major portion of the structure, it is so well known that it cannot form the special technical feature required that makes a contribution over the prior art. Alternatively, the benzoylsulfonamide structure may be thought to satisfy the requirement of (b)(2) in that it forms a structure which is the basis for a recognized class of chemical compounds. However, the structure is not sufficiently large or consistently defined as to meet this criterion.

DECISION

The petition decision has been but is not modified. This petition is therefore **DENIED**.

Applicants remain under obligation to reply to the Office action of July 14, 2006, within the time period set therein, or as extended under 37 CFR 1.136(a).

Should there be any questions about this decision please contact William R. Dixon, Jr., by letter addressed to Director, TC 1600, at the address listed above, or by telephone at 571-272-0519 or by facsimile sent to the general Office facsimile number, 571-273-8300.

George C. Elliott
Director, Technology Center 1600

1 1 JUN 2007

UNITED STATES PATENT AND TRADEMARK OFFICE

Commissioner for Patents
United States Patent and Trademark Office
P.O. Box 1450
Alexandria, VA 22313-1450
www.uspto.gov

ELI LILLY & COMPANY
PATENT DIVISION
P.O. BOX 6288
INDIANAPOLIS IN 46206-6288

In re Application of	:	
MADER et al.	:	DECISION
Application No.: 10/535,002	:	
PCT No.: PCT/US2003/035041	:	
Int. Filing Date: 13 November 2003	:	
Priority Date: 22 November 2002	:	
Attorney's Docket No.: X16114	:	
For: ANTITUMOR BENZOYLSULFONAMIDES	:	

This is a decision in response to applicant's "PETITION TO THE OFFICE OF PCT LEGAL ADMINISTRATION OF THE USPTO UNDER 37 CFR 1.181 FOR REVIEW AND MODIFICATION OF THE GROUP DIRECTOR'S DECISION OF RESTRICTION REQUIREMENT UNDER UNITY OF INVENTION"filed in the United States Patent and Trademark Office (USPTO) on 16 January 2007.

BACKGROUND

On 13 November 2003, applicant filed international application PCT/US2003/035041, which designated the United States and claimed a priority date of 22 November 2002. A copy of the international application was communicated to the USPTO from the International Bureau on 10 June 2004. The thirty-month period for paying the basic national fee in the United States expired at midnight on 23 May 2005 (22 May 2005 being a Sunday).

On 12 May 2005, applicant filed a submission for entry into the national stage in the United States which was accompanied by, *inter alia*, the U.S. Basic National Fee and a declaration of inventors.

On 26 January 2006, the USPTO mailed a NOTIFICATION OF ACCEPTANCE OF APPLICATION UNDER 35 U.S.C. 371 (Form PCT/DO/EO/903) according a 371(c)(1), (c)(2), and (c)(4) date of 12 May 2005.

On 16 May 2006, an Office action setting forth a lack of unity requirement between Groups I-VI was mailed.

On 16 June 2006, applicants filed a "Response to Restriction Requirement" electing

Group III with traverse. Applicants urged that the lack of unity requirement set forth in the May 16, 2006 Office action did not properly follow the PCT Markush group guidelines.

On 14 July 2006, an Office action setting forth the lack of unity requirement again and addressing applicants' traversal was mailed.

On 02 August 2006, applicants filed a "PETITION TO THE TECHNOLOGY CENTER DIRECTOR UNDER 37 CFR 1.144 FOR REVIEW AND MODIFICATION OF RESTRICTION REQUIREMENT".

On 17 October 2006, a decision was mailed indicating that the restriction requirement between Groups I-V was maintained but that Group VI (claim 4) would be rejoined with the elected compounds of Group III.

On 03 November 2006, applicants filed a "SUPPLEMENTAL PETITION TO THE TECHNOLOGY CENTER DIRECTOR UNDER 37 CFR 1.144 FOR REVIEW AND MODIFICATION OF RESTRICTION REQUIREMENT".

On 04 January 2007, a decision was mailed denying applicants' supplemental petition.

On 16 January 2007, applicants filed the instant "PETITION TO THE OFFICE OF PCT LEGAL ADMINISTRATION OF THE USPTO UNDER 37 CFR 1.181 FOR REVIEW AND MODIFICATION OF THE GROUP DIRECTOR'S DECISION OF RESTRICTION REQUIREMENT UNDER UNITY OF INVENTION".

DISCUSSION

Unity of invention (not restriction) practice is applicable in national stage applications submitted under 35 U.S.C. 371. MPEP § 1893.03(d). During the national stage as a Designated or Elected Office under 35 U.S.C. 371, PCT Rules 13.1 and 13.2 will be followed when considering unity of invention claims. MPEP § 1850, item I.

PCT Rule 13.1 states

> The international application shall relate to one invention only or to a group of inventions so linked as to form a single general inventive concept ("requirement of unity of invention").

PCT Rule 13.2 states

> Where a group of inventions is claimed in one and the same international application, the requirement of unity of invention referred to in Rule 13.1 shall be fulfilled only when there is a technical relationship among those inventions involving one or more of the same or corresponding special technical features. The expression "special technical features" shall mean those technical features that define a contribution which each of the claimed inventions, considered as a whole, makes over the prior art.

As noted in the decision mailed October 17, 2006, in the Office action mailed May 16, 2006, the examiner set forth the Lack of Unity requirement as follows:

Formula I: 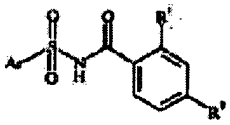

Group I, claims 1-3 and 5, drawn to compounds of Formula 1 with Ar defined as 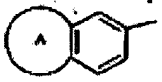 , and A is phenyl, cyclopentadienyl, cyclobutyl or cyclopentyl;

Group II, claims 1-3 and 5, drawn to compounds of Formula 1 with Ar defined as 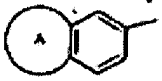 , and A is benzofuryl;

Group III, claims 1-3 and 5, drawn to compounds of Formula 1 where Ar is benzothien-2-yl, benzothien-5-yl or benzothien-6-yl;

Group IV, claims 1-3 and 5, drawn to compounds of Formula 1 where Ar is thieno[3,2-b]pyridine-2-yl;

Group V, claims 1-3 and 5, drawn to compounds of Formula 1 where Ar is 1-(C_{1-6} alkyl)indol-2-yl; and

Group VI, claim 4, drawn to a method of use of the compounds of claim 1.

The decision mailed October 17, 2006 rejoined Group VI but maintained the lack of unity requirement between Groups I-V.

Paragraph 10.17 of the PCT International Search and Preliminary Examination Guidelines discusses lack of unity under Markush practice. Paragraph 10.17(a) states,

> When the Markush grouping is for alternatives of chemical compounds, they shall be regarded as being of a similar nature where the following criteria are fulfilled:
>
> (A) all alternatives have a common property or activity, and
>
> (B)(1) a common structure is present, i.e., a significant structural element is shared by all of the alternatives, or
>
> (B) (2) in cases where the common structure cannot be the unifying criteria, all alternatives belong to a recognized class of chemical compounds in the art to which the invention pertains.

Paragraph 10.17(b) clarifies what is meant by "a significant structural element"

> In paragraph (a)(B)(1), above, the words "significant structural element is shared by all of the alternatives" refer to cases where the compounds share a common chemical structure which occupies a large portion of their structures, or in case the compounds have in common only a small

> portion of their structures, the commonly shared structure constitutes a structurally distinctive portion in view of existing prior art, and the common structure is essential to the common property or activity. The structural element may be a single component or a combination of individual components linked together.

In the instant application, all alternatives claimed are purported to have the common property or activity of being antitumor agents. Thus, item (A) is satisfied.

As to item (B), (B)(1) is applicable. The compounds share a common chemical structure, namely, benzoylsulfonamide, which occupies a large portion of their structure. I.e., benzoylsulfonamide is the common technical feature. However, that is not the end of the analysis. As noted in paragraph 10.03 of the PCT International Search and Preliminary Examination Guidelines,

> In the case of independent claims to A + X and A + Y, unity of invention is present a priori as A is common to both claims. However, if it can be established that A is known, there is lack of unity a posteriori, since A (be it a single feature or a group of features) is not a technical feature that defines a contribution over the prior art.

Here, this common structure (or common technical feature) is well known as the basis for many sulfa drugs, as set forth in the decision mailed October 17, 2006. Additionally, as noted by the examiner in the Office action mailed May 16, 2006, the common structure is shown by Ziemer (US 6,235,680. Abstract), and in the Office Action mailed July 14, 2006, the common structure is shown by Wilson (US 5,405,727, compound F). Nor does it appear to be disputed that benzoylsulfonamide is known. Thus, there is a lack of unity because the common structure does not define a contribution over the art.

Attention is also directed to the slide presentation dated November 15, 2001, entitled "Lack of Unity in PCT Applications and 35 U.S.C. 371 Applications in Technology Center 1600" (available at http://www.uspto.gov/web/patents/biochempharm/confnov15.htm) reproduced in applicants' petition of November 3, 2006. The relevant slides are reproduced below.

Markush Practice

In this case the indolyl moiety is the significant structural element that is shared by all of the alternatives. Since all the claimed compounds are alleged to possess the same utility, unity may be present.

But since the indolyl structure is known, it does not make a contribution over the prior art, *therefore unity is lacking*

Markush Practice

Example 18 – common structure:

Claim 1: A compound of the formula:

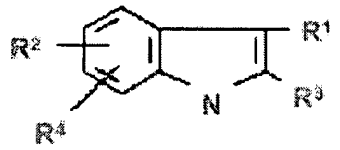

wherein R^1 is selected from the group consisting of phenyl, pyridyl, thiazolyl, triazinyl, alkylthio, alkoxy and methyl; R^2 – R^4 are methyl, benzyl or phenyl.

The disclosure states that the compounds are useful as pharmaceuticals for the purpose of enhancing the capacity of the blood to absorb oxygen.

The language in the second slide does not specifically state whether the "significant structural element" is "a common chemical structure which occupies a large portion of their structures" or is a case where "the compounds have in common only a small portion of their structures." Nevertheless, it seems clear that the indolyl structure occupies a large portion of the structure.

Applicants urge that the Technology Center has misinterpreted paragraph 10.17(b) of the PCT International Search and Preliminary Examination Guidelines. Specifically, it is urged that it is only in cases where the compounds have in common only a small portion of their structures that the commonly shared structure must define a contribution over the art. However, this argument is incorrect. The relevant language reads as follows

> . . . or in case the compounds have in common only a small portion of their structures, the commonly shared structure constitutes a structurally distinctive portion in view of existing prior art, <u>and</u> the common structure is essential to the common property or activity.

Thus, in the case where only a small portion of the structures is common to the compounds, the common portion must not only define a contribution over the art, but must also be essential to the common property or activity. As noted above in reference to paragraph 10.03 of the PCT International Search and Preliminary Examination Guidelines, the common technical feature must define a contribution over the art.

To the extent that this decision is inconsistent with any previous decisions, those portions of the previous decisions are hereby VACATED.

CONCLUSION

For the reasons set forth above, applicants' petition under 37 CFR 1.181 is **DISMISSED** without prejudice.

Please direct further correspondence with respect to this matter to Mail Stop PCT, Commissioner for Patents, Office of PCT Legal Administration, P.O. Box 1450, Alexandria, Virginia 22313-1450, with the contents of the letter marked to the attention of the Office of PCT Legal Administration.

Daniel Stemmer
Legal Examiner
PCT Legal Affairs
Office of Patent Cooperation Treaty
Legal Administration
Telephone: (571) 272-3301

UNITED STATES PATENT AND TRADEMARK OFFICE

UNITED STATES DEPARTMENT OF COMMERCE
United States Patent and Trademark Office
Address: COMMISSIONER FOR PATENTS
P.O. Box 1450
Alexandria, Virginia 22313-1450
www.uspto.gov

PHILIP S. JOHNSON
JOHNSON & JOHNSON
ONE JOHNSON & JOHNSON PLAZA
NEW BRUNSWICK, NJ 08933-7003

Mail Date: 04/21/2010

Applicant	: Bart Rudolf Romanie Kesteleyn	: DECISION ON REQUEST FOR
Patent Number	: 7608726	: RECALCULATION of PATENT
Issue Date	: 10/27/2009	: TERM ADJUSTMENT IN VIEW
Appliction No	: 10/535,007	: OF WYETH AND NOTICE OF INTENT TO
Filed	: 05/12/2005	: ISSUE CERTIFICATE OF CORRECTION
		:

The Request for Recalculation is **GRANTED** to the extent indicated.

The patent term adjustment has been determined to be **953** days. The USPTO will *sua sponte* issue a certificate of correction reflecting the amount of PTA days determined by the recalculation.

Prior to the issuance of the certificate of correction, the USPTO will afford patentee an opportunity to be heard and request reconsideration. Accordingly, patentee has **one month or thirty (30) days**, whichever is longer, to file a request for reconsideration of this patent term adjustment calculation. See 35 U.S.C. 154(b)(3)(B)(ii) and 37 CFR 1.322(a)(4). No extensions of time will be granted under 37 CFR 1.136.

Patentee should use document code PET.OP if electronically filing a request for reconsideration of this patent term adjustment calculation. The patentee must also include the information required by 37 CFR 1.705(b)(2) and the fee required by 37 CFR 1.18(e). If patentee does not file a timely request for reconsideration of this patent term adjustment calculation including the information required by 37 CFR 1.705(b)(2) and the fee required by 37 CFR 1.18(e), the USPTO will issue a certificate of correction reflecting the PTA determination noted above.

Patentee should be aware that in order to preserve the right to review in the United States District Court for the District of Columbia of the USPTO patent term adjustment determination, patentee must ensure that he or she also take the steps required under 35 U.S.C. 154(b)(4)(A) in a timely manner. Nothing in the request for recalculation should be construed as providing an alternative time frame for commencing a civil action under 35 U.S.C. 154(b)(4)(A).

Any questions concerning this decision should be directed to the Office of Patent Legal Administration at 571-272-7702.

UNITED STATES PATENT AND TRADEMARK OFFICE

UNITED STATES DEPARTMENT OF COMMERCE
United States Patent and Trademark Office
Address: COMMISSIONER FOR PATENTS
P.O. Box 1450
Alexandria, Virginia 22313-1450
www.uspto.gov

PHILIP S. JOHNSON
JOHNSON & JOHNSON
ONE JOHNSON & JOHNSON PLAZA
NEW BRUNSWICK, NJ 08933-7003

Mail Date: 05/17/2010

Applicant : Bart Rudolf Romanie Kesteleyn
Patent Number : 7608726
Issue Date : 10/27/2009
Application No : 10/535,007
Filed : 05/12/2005

: NOTICE CONCERNING IMPROPER
: CALCULATION OF PATENT TERM
: ADJUSTMENT BASED UPON USPTO
: IMPROPERLY MEASURING REDUCTION
: PERIOD UNDER 37 CFR 1.704(c)(10).

The United States Patent and Trademark Office (USPTO) discovered that in processing the recent recalculation decisions mailed in response to patentee's filed Request for Recalculation of Patent Term Adjustment in view of Wyeth, the USPTO improperly measured the reduction period for reductions under 37 CFR 1.704(c)(10). Pursuant to 37 CFR 1.704(c)(10), patentee's reduction begins on the date of filing the amendment under 37 CFR 1.312 ("1.312 amendment") or other related paper and ends on the date that the Office mails a response to the filing of the 1.312 amendment or other paper. It has been discovered that during the recalculation, the calculation failed to the limit the reduction to the mail date of the response to the 1.312 amendment or other paper. Accordingly, patentee's reductions were greater than warranted.

This notice **VACATES** the previous GRANTED request for recalculation and provides patentee with a revised GRANTED recalculation.

The patent term adjustment has been determined to be **1038** days. The USPTO will *sua sponte* issue a certificate of correction reflecting the amount of patent term adjustment (PTA) days determined by the recalculation.

Prior to the issuance of the certificate of correction, the USPTO will afford patentee an opportunity to be heard and request reconsideration. Accordingly, patentee has **one month or thirty (30) days** from the mail date of this notice, whichever is longer, to file a request for reconsideration of this PTA calculation. See 35 U.S.C. § 154(b)(3)(B)(ii) and 37 CFR 1.322(a)(4).

Patentee should use document code PET.OP if electronically filing a request for reconsideration of this PTA calculation. The patentee must also include the information required by 37 CFR 1.705(b)(2), and the fee required by 37 CFR 1.18(e). If patentee does not file a timely request for reconsideration of this PTA calculation, including the information required by 37 CFR 1.705(b)(2) and the fee required by 37 CFR 1.18(e), the USPTO will issue a certificate of correction reflecting the PTA determination noted above.

Patentee should be aware that in order to preserve the right of review of the USPTO's PTA determination in the United States District Court for the District of Columbia, patentee must ensure that the steps required under 35 U.S.C. § 154 (b)(4) are taken in a timely manner. Nothing in the request for recalculation should be construed as providing an alternative time frame for commencing a civil action under 35 U.S.C. § 154(b)(4).

UNITED STATES PATENT AND TRADEMARK OFFICE

COMMISSIONER FOR PATENTS
UNITED STATES PATENT AND TRADEMARK OFFICE
P.O. BOX 1450
ALEXANDRIA, VA 22313-1450
www.uspto.gov

AKZO NOBEL INC.
INTELLECTUAL PROPERTY DEPARTMENT
7 LIVINGSTONE AVENUE
DOBBS FERRY NY 10522-3408

COPY MAILED

AUG 08 2006

OFFICE OF PETITIONS

Applicant: De Haan et al.
Appl. No.: 10/535,009
International Filing Date: November 13, 2003
Title: PHARMACEUTICAL TABLETS CONTAINING TIBOLONE AND A COATING
Attorney Docket No.: 2002.745US
Pub. No.: US 2006/0041557 A1
Pub. Date: March 9, 2006

This is a decision on the paper requesting a corrected publication under 37 CFR 1.221(b) received on April 17, 2006, for the above-identified application

The request is DISMISSED.

Applicant requests that the application be republished because the patent application publication contains a material error on the front page of the publication as the second inventor's name "Cornelis Elisabeth Johannus Van Lare" is misspelled as "Cornelis Elisabetht Johannus Van Lare."

37 CFR 1.221 (b) is applicable "only when the Office makes a material mistake which is apparent from Office records.... Any request for a corrected publication or revised patent application publication other than provided as provided in paragraph (a) of this section must be filed within two months from the date of the patent application publication. This period is not extendable." A material mistake must affect the public's ability to appreciate the technical disclosure of the patent application publication, to determine the scope of the patent application publication, or to determine the scope of the provisional rights that an applicant may seek to enforce upon issuance of a patent. [1]

The instant request does not identify a material mistake in the publication made by the Office. The inventor's middle name "Elisabetht" is printed correctly as it was provided on the declaration. Even if the Office misprinted the inventor's middle name, it would not be a material error under 37 CFR 1.221(b).

[1] Changes to Implement Eighteen-Month Publication of Patent Applications, 65 FR 57023, 57038 (Sept. 20, 2000), 1239, Off. Gaz. Pat. Office Notices 63, 75 (Oct. 10, 2000) (final rule).

Applicant is reminded of his duty to conduct a reasonable inquiry before filing a paper before the Office. See MPEP 410.

Applicant's request for a Corrected Publication on April 17, 2006, may constitute a "failure to engage in reasonable efforts to conclude processing or examination of the application." See 1.704(c). This determination will be made on or after a mailing of a Notice of Allowance.

On November 3, 2005, a Filing Receipt was mailed by the Office, which listed the inventor's name as Cornelis Elisabetht Johannus Van Lare. To avoid this type of problem or to make a change in the inventor's name in the future, applicant's representative should make request a corrected filing receipt along with a supplemental application data sheet, which properly spells the inventor's name.

The applicant is advised that a "request for republication of an application previously published" may be filed under 37 CFR 1.221 (a). Such a request for republication "must include a copy of the application compliance with the Office's electronic filing system requirements and be accompanied by the publication fee set forth in § 1.18 (d) and the processing fee set forth in § 1.17 (i)." If the request for republication does not comply with the electronic filing system requirements, the republication will not take place and the publication fee set forth in § 1.18 (d) will be refunded. The processing fee will be retained.

Any request for republication under 37 CFR 1.221(a), must be submitted via the EFS system and questions or request for reconsideration of the decision, should be addressed as follows:

By mail to: Mail Stop PGPUB
Commissioner for Patents
P.O. Box 1450
Alexandria, Va. 22313-1450

By facsimile: 571-273-8300

Inquiries relating to this matter may be directed to Mark Polutta at (571) 272-7709 (voice).

Mark Polutta
Senior Legal Advisor
Office of Patent Legal Administration
Office of the Deputy Commissioner
for Patent Examination Policy

UNITED STATES PATENT AND TRADEMARK OFFICE

Commissioner for Patents
United States Patent and Trademark Office
P.O. Box 1450
Alexandria, VA 22313-1450
www.uspto.gov

SIEMENS CORPORATION
INTELLECTUAL PROPERTY DEPARTMENT
170 WOOD AVENUE SOUTH
ISELIN NJ 08830

COPY MAILED

JUN 26 2009

OFFICE OF PETITIONS

In re Application of	:	
Steffen Armbruster	:	DECISION ON PETITION
Application No. 10/535,038	:	
Filed: May 12, 2005	:	
Attorney Docket No. 2002P17939WOUS	:	

This is a decision on the petition filed May 29, 2009, pursuant to 37 CFR 1.137(b), to revive the above-identified application.

The petition is **GRANTED**.

The above-identified application became abandoned for failure to file a proper Appeal Brief. The Office mailed a Notification of Non-Compliant Appeal Brief on June 18, 2008, which set an extendable period for reply of one month. No response having been received, the application became abandoned on July 19, 2008. The Office mailed a Notice of Abandonment on January 15, 2009.

With the instant petition, petitioner paid the petition fee, made the proper statement of unintentional delay, and filed the required reply in the form of an Appeal Brief.

The matter is being forwarded to Group Art Unit 3651 for consideration of the Appeal Brief filed May 29, 2009.

Telephone inquiries regarding this decision should be directed to the undersigned at (571)272-3207.

Cliff Congo
Petitions Attorney
Office of Petitions

22 MAR 2006

#6

UNITED STATES PATENT and TRADEMARK OFFICE

COMMISSIONER FOR PATENTS
UNITED STATES PATENT AND TRADEMARK OFFICE
P.O BOX 1450
ALEXANDRIA, VA 22313-1450
www.uspto.gov

Foley & Lardner LLP
P.O. Box 80278
San Diego, California 92138-0278

In re Application of	:	DECISION ON
Downes et al	:	
Application No.: 10/535,041	:	
PCT No.: PCT/US2003/036123	:	
Application No: 10/535,041	:	
Int. Filing Date: 14 November 2003	:	PETITION UNDER
Priority Date: 15 November 2002	:	
Attorney's Docket No.: SALK3130-1J	:	
For: NON-STEROIDAL FARNESOID X	:	
RECEPTOR MODULATORS	:	37 CFR 1.47(a)

This is in response to the "December 28, 2005" filed on 28 December 2005. The petition fee of $200.00 has charged to Deposit Account No. 50-0872.

BACKGROUND

On 14 November 2003, applicants filed international application PCT/US2003/036123, which claimed priority to an earlier application filed 15 November 2002.

On 13 May 2005, applicants filed a transmittal letter for entry into the national stage in the U.S. under 35 U.SC. 371, which was accompanied by, inter alia, the U.S. basic national fee. No executed oath or declaration accompanied the above the above papers.

On 28 September 2005, the United States Designated/Elected Office (DO/EO/US) mailed a "NOTIFICATION OF MISSING REQUIREMENTS UNDER 35 U.S.C. 371 IN THE UNITED STATES DESIGNATED/ELECTED OFFICE (DO/EO/US)" (Form PCT/DO/EO/905) which informed applicant, inter alia, that an "Oath or Declaration of the inventors, in compliance with 37 CFR 1.497(a), and (b), identifying the application by International application number and international filing date" must be submitted within two (2) months from the date of this notice or by 32 months from the priority date for the application, whichever is later, in order to avoid abandonment of the national stage application.

On 28 December 2005, applicants filed a "RESPONSE TO NOTIFICATION OF MISSING REQUIREMENTS," which included, *inter alia*, a petition under 37 CFR 1.47, an executed declaration signed by Michael R. Downes and Ronald Evans on their behalf and on the behalf of the non-signing inventors, and declaration by Sheila R. Kirschenbaum.

DISCUSSION

A petition under 37 CFR 1.47(a) must be accompanied by (1) the fee under 37 CFR 1.17(g), (2) factual proof that the missing joint inventor refuses to execute the application or cannot be reached after diligent effort, (3) a statement of the last known address of the missing inventor, and (4) an oath or declaration by each 37 CFR 1.47(a) applicant on his or her own behalf and on behalf of the non-signing joint inventor.

Furthermore, section 409.03(d) of the Manual of Patent Examining Procedure (M.P.E.P.) **Proof of Unavailability or Refusal**, the relevant sections states, in part:

> **REFUSAL TO JOIN:**
>
> A refusal by an inventor to sign an oath or declaration when the inventor has not been presented with the application papers does not itself suggest that the inventor is refusing to join the application unless it is clear that the inventor understands exactly what he or she is being asked to sign and refuses to accept the application papers. A copy of the application papers should be sent to the last known address of the nonsigning inventor, or, if the nonsigning inventor is represented by counsel, to the address of the nonsigning inventor's attorney. The fact that an application may contain proprietary information does not relieve the **37 CFR 1.47** applicant of the responsibility to present the application papers to the inventor if the inventor is willing to receive the papers in order to sign the oath or declaration. It is noted that the inventor may obtain a complete copy of the application, unless the inventor has assigned his or her interest in the application, and the assignee has requested that the inventor not be permitted access. See **MPEP § 106**. It is reasonable to require that the inventor be presented with the application papers before a petition under **37 CFR 1.47** is granted since such a procedure ensures that the inventor is apprised of the application to which the oath or declaration is directed. *In re Gray*, 115 USPQ 80 (Comm'r Pat. 1956).
>
> Where a refusal of the inventor to sign the application papers is alleged, the circumstances of the presentation of the application papers and of the refusal must be specified in a statement of facts by the person who presented the inventor with the application papers and/or to whom the refusal was made. Statements by a party not present when an oral refusal is made will not be accepted.
>
> Proof that a *bona fide* attempt was made to present a copy of the application papers (specification, including claims, drawings, and oath or declaration) to the nonsigning inventor for signature, but the inventor refused to accept delivery of the papers or expressly stated that the

> declaration) to the nonsigning inventor for signature, but the inventor refused to accept delivery of the papers or expressly stated that the application papers should not be sent, may be sufficient. When there is an express oral refusal, that fact along with the time and place of the refusal must be stated in the statement of facts. When there is an express written refusal, a copy of the document evidencing that refusal must be made part of the statement of facts. The document may be redacted to remove material not related to the inventor's reasons for refusal.
>
> When it is concluded by the **37 CFR 1.47** applicant that a nonsigning inventor's conduct constitutes a refusal, all facts upon which that conclusion is based should be stated in the statement of facts in support of the petition or directly in the petition. If there is documentary evidence to support facts alleged in the petition or in any statement of facts, such evidence should be submitted. Whenever a nonsigning inventor gives a reason for refusing to sign the application oath or declaration, that reason should be stated in the petition.

Petitioner has satisfied requirements (1), (2) - (4) of 37 CFR 1.47(a) but not item (3) under 37 CFR 1.47(a).

Regarding requirement (1), petitioner has provided the fee under 37 CFR 1.17(g).

Regarding requirement (2), the averments of Sheila R. Kirschenbaum are sufficient to support a finding that the nonsigning inventors, Hughes, Nicolaou and Roecker refuse to sign because a copy of the patent application and declaration were sent to Dr. Fitting, Chief Patent Counsel to The Scripps Research Institute and the legal representative of the three nonsigning inventors, and in a telephone conversion on October 26, 2005 he acknowledge the he received the letter. On December 5, 2005 Sheila spoke with Jennifer Dyer, Director of Technology Development at The Scripps Research Institute, and she informed Sheila that the inventors would not be signing the Declaration. This was later confirmed with a phone conversation with Dr. Fitting on December 14, 2005.

Regarding requirement (3), petitioner has not provided a statement of the last known address of the missing inventors in the petition.

Regarding requirement (4), petitioner has provided an executed declaration signed by Mr. Michael R. Downes and Ronald M. Evans on their behalf and on the behalf of the nonsigning joint inventors Ronald M. Evans, Kyriacos C Nicolaou, and Anthony J Roecker.

Consequently, the petition has not met all the items under 37 CFR 1.47(a).

DECISION

The petition under 37 CFR 1.47(a) is **DISMISSED** without prejudice.

If reconsideration of the merits of the petition under 37 CFR 1.47(a) is desired, applicant must file a request for reconsideration within **TWO (2) MONTHS** from the mail date of this Decision. Any reconsideration request should include a cover letter entitled "Renewed Petition Under 37 CFR 1.47(a)." Extensions of time are available under 37 CFR 1.136(a). Failure to timely file the proper response will result in ABANDONMENT.

Any further correspondence with respect to this matter should be addressed to the Mail Stop PCT, Commissioner for Patents, Office of PCT Legal Administration, P.O. Box 1450, Alexandria, Virginia 22313-1450, with the contents of the letter marked to the attention of the Office of PCT Legal Administration.

Rafael Bacares
PCT Legal Examiner
PCT Legal Office
Telephone: (571) 272-3276
Facsimile: (571) 273-6459

20 JUN 2006

#8

UNITED STATES P[redacted] and TRADEMARK OFFICE [redacted]

COMMISSIONER FOR PATENTS
UNITED STATES PATENT AND TRADEMARK OFFICE
P.O BOX 1450
ALEXANDRIA, VA 22313-1450
www.uspto.gov

Foley & Lardner LLP
P.O. Box 80278
San Diego, California 92138-0278

In re Application of	:	DECISION ON
Downes et al	:	
Application No.: 10/535,041	:	
PCT No.: PCT/US2003/036123	:	
Application No: 10/535,041	:	
Int. Filing Date: 14 November 2003	:	PETITION UNDER
Priority Date: 15 November 2002	:	
Attorney's Docket No.: SALK3130-1J	:	
For: NON-STEROIDAL FARNESOID X	:	
RECEPTOR MODULATORS	:	37 CFR 1.47(a)

This is in response to the "RENEWED PETITION UNDER 37 C.F.R. §1.47(a)" filed on 08 May 2006.

BACKGROUND

In a decision from this Office on 22 March 2006, the initial petition under 37 CFR 1.47(a) was dismissed. The decision stated that item (3) had not been satisfied.

On 08 May 2006, petitioner submitted a "Renewed Petition Under 37 CFR 1.47(a)" requesting reconsideration of the Office's decision of 22 March 2006 with respect to accepting the above application without the signature of the nonsigning inventors .Filed with the renewed petition, *inter alia*, is the last known addresses of the nonsigning inventors.

DISCUSSION

A petition under 37 CFR 1.47(a) must be accompanied by: (1) the fee under 37 CFR 1.17(h), (2) factual proof that the missing joint inventor refuses to execute the application or cannot be reached after diligent effort, (3) a statement of the last known address of the missing inventor, and (4) an oath or declaration by the 37 CFR 1.47(a) applicant on his or her own behalf and on behalf of the non-signing joint inventor.

The renewed petition of 22 March 2006 has satisfied item (3) under 37 CFR 1.47(a). Thus satisfying all the requirements under 37 CFR 1.47(a).

Petitioner has provided the last known addresses of nonsigning inventors Hughes, Nicolau, and Roecker.

Petitioner has now satisfied items (1), (2), (3), and (4) under 37 CFR 1.47(a), thus completing the requirements under 37 CFR 1.47(a).

CONCLUSION

The petition under 37 CFR 1.47(a) is **GRANTED**.

The Application Division and the International Division are authorized to accept the application as a 37 CFR 1.47(a) application and to mail a filing receipt. The application will be given a 35 U.S.C. 371(c)(1), (c)(2), and (c)(4) date of **28 December 2005.**

As provided in 37 CFR 1.47(a), a notice of the filing of this application will be forwarded to the non-signing inventor at his last known address of record.

A notice of the filing of the application under 37 CFR 1.47(a) will be published in the Official Gazette.

This application is being returned to the United States Designated/Elected Office (DO/EO/US) for continued processing under 35 U.S.C. 371.

Rafael Bacares
PCT Legal Examiner
PCT Legal Office
Telephone: (571) 272-6312
Facsimile: (571) 273-0459

20 JUN 2006

UNITED STATES PATENT and TRADEMARK OFFICE

COMMISSIONER FOR PATENTS
UNITED STATES PATENT AND TRADEMARK OFFICE
P.O BOX 1450
ALEXANDRIA, VA 22313-1450
www.uspto.gov

Robert Hughes
800 N. Lindberg, Q403
Creve Couer, Missouri 63167

In re Application of
Downes et al
Application No.: 10/535,041
PCT No.: PCT/US2003/036123
Application No: 10/535,041
Int. Filing Date: 14 November 2003
Priority Date: 15 November 2002
Attorney's Docket No.: SALK3130-1J
For: NON-STEROIDAL FARNESOID X RECEPTOR MODULATORS

Dear Robert Hughes:

You are named as an inventor in the above identified United States patent application, filed under the provisions of 37 CFR 1.47(a) and 35 U.S.C. 116. Should a patent be granted, you will be designated as an inventor.

As a named inventor, you are entitled to inspect any paper in the file wrapper of the application, order copies of all or any part thereof (at a prepaid cost per 37 CFR 1.19) or to make your position of record in the application. Alternatively, you may arrange to do any of the preceding through a registered patent agent or attorney presenting written authorization from you. If you care to join in the application, counsel of record (see below) would presumably assist you. Joining in the application would entail the filing of an appropriate oath or declaration by you pursuant to 37 CFR 1.63.

Rafael Bacares
PCT Legal Examiner
PCT Legal Office
Telephone: (571) 272-3276
Facsimile: (571) 273-0459

Foley & Lardner LLP
P.O. Box 80278
San Diego, California 92138-0278

20 JUN 2006

UNITED STATES PATENT and TRADEMARK OFFICE

COMMISSIONER FOR PATENTS
UNITED STATES PATENT AND TRADEMARK OFFICE
P.O BOX 1450
ALEXANDRIA, VA 22313-1450
www.uspto.gov

K.C. Nicolau
9625 Blackgold Road
La Jolla, California 92117

In re Application of
Downes et al
Application No.: 10/535,041
PCT No.: PCT/US2003/036123
Application No: 10/535,041
Int. Filing Date: 14 November 2003
Priority Date: 15 November 2002
Attorney's Docket No.: SALK3130-1J
For: NON-STEROIDAL FARNESOID X RECEPTOR MODULATORS

Dear K.C. Nicolau:

You are named as an inventor in the above identified United States patent application, filed under the provisions of 37 CFR 1.47(a) and 35 U.S.C. 116. Should a patent be granted, you will be designated as an inventor.

As a named inventor, you are entitled to inspect any paper in the file wrapper of the application, order copies of all or any part thereof (at a prepaid cost per 37 CFR 1.19) or to make your position of record in the application. Alternatively, you may arrange to do any of the preceding through a registered patent agent or attorney presenting written authorization from you. If you care to join in the application, counsel of record (see below) would presumably assist you. Joining in the application would entail the filing of an appropriate oath or declaration by you pursuant to 37 CFR 1.63.

Rafael Bacares
PCT Legal Examiner
PCT Legal Office
Telephone: (571) 272-3276
Facsimile: (571) 273-0459

Foley & Lardner LLP
P.O. Box 80278
San Diego, California 92138-0278

20 JUN 2006

UNITED STATES PATENT and TRADEMARK OFFICE

COMMISSIONER FOR PATENTS
UNITED STATES PATENT AND TRADEMARK OFFICE
P.O BOX 1450
ALEXANDRIA, VA 22313-1450
www.uspto.gov

Anthony J. Roecker
3337 Clairemont Drive, #4
San Diego, California 92117

In re Application of
Downes et al
Application No.: 10/535,041
PCT No.: PCT/US2003/036123
Application No: 10/535,041
Int. Filing Date: 14 November 2003
Priority Date: 15 November 2002
Attorney's Docket No.: SALK3130-1J
For: NON-STEROIDAL FARNESOID X RECEPTOR MODULATORS

Dear Anthony J. Roecker:

You are named as an inventor in the above identified United States patent application, filed under the provisions of 37 CFR 1.47(a) and 35 U.S.C. 116. Should a patent be granted, you will be designated as an inventor.

As a named inventor, you are entitled to inspect any paper in the file wrapper of the application, order copies of all or any part thereof (at a prepaid cost per 37 CFR 1.19) or to make your position of record in the application. Alternatively, you may arrange to do any of the preceding through a registered patent agent or attorney presenting written authorization from you. If you care to join in the application, counsel of record (see below) would presumably assist you. Joining in the application would entail the filing of an appropriate oath or declaration by you pursuant to 37 CFR 1.63.

Rafael Bacares
PCT Legal Examiner
PCT Legal Office
Telephone: (571) 272-3276
Facsimile: (571) 273-0459

Foley & Lardner LLP
P.O. Box 80278
San Diego, California 92138-0278

UNITED STATES PATENT AND TRADEMARK OFFICE

Commissioner for Patents
United States Patent and Trademark Office
P.O. Box 1450
Alexandria, VA 22313-1450
www.uspto.gov

Paper No.

FOLEY & LARDNER LLP
P.O. BOX 80278
SAN DIEGO CA 92138-0278

COPY MAILED

DEC 1 0 2009

OFFICE OF PETITIONS

In re Application of	:	
Downes et al.	:	
Application No. 10/535,042	:	ON APPLICATION FOR
Filed: 01/09/2006	:	PATENT TERM ADJUSTMENT
Atty Docket No.	:	
SALK3140-01	:	

This is in response to the "APPLICATION FOR PATENT TERM ADJUSTMENT UNDER 37 C.F.R. §1.705," filed on August 31, 2009, which is treated as an application filed under 37 CFR 1.705(b). Applicants submit that the correct patent term adjustment to be indicated on the patent is 960 days, not 374 days as calculated by the Office as of the mailing of the initial determination of patent term adjustment. Applicant requests this correction solely on the basis that the Office will take in excess of three years to issue this patent.[1]

As the instant application for patent term adjustment requests reconsideration of the patent term adjustment as it relates to the Office's failure to issue the patent within 3 years of the filing date, the application for patent term adjustment under 37 CFR 1.705(b) is **DISMISSED as PREMATURE**.

Knowledge of the actual date the patent issues is required to calculate the amount, if any, of additional patent term patentee is entitled to for Office failure to issue the patent within 3 years. See § 1.702(b). The computer will not undertake the § 1.702(b) calculation until the actual date of issuance of the patent has been determined. Likewise, the computer will not

[1] It is noted that applicants state on Page 2 that "PTO delay is incorrectly identified as 391 days coming from … 428 days (from '14 months from application date' on March 9, 2007, to PTO action of 'Restriction Requirement' on April, 03, 2008.)" However, the restriction requirement was mailed 14 months and 391 days after the date all requirements under 35 U.S.C. 371 were completed. Applicants' argument will be construed to mean that the first Office action (restriction requirement) was mailed 14 months and 391 days after the completion date of all requirements under 35 U.S.C. 371.

calculate any further Office delay under § 1.702(a)(4) or applicant delay under § 1.704(c)(10) until the actual date of issuance of the patent has been determined. As such, the Office can not make a determination on the correctness of the patent term adjustment until the patent has issued.

Requesting reconsideration of the patent term adjustment to be indicated on the patent under 37 CFR 1.705(b) based on the initial determination of patent term adjustment and a projected issuance date of the patent is premature. Accordingly, it is appropriate to dismiss as premature such a request.

Rather than file an application for patent term adjustment under 37 CFR 1.705(b) contesting the 37 CFR 1.702(b) calculation at the time of the mailing of the notice of allowance, applicant is advised that they may wait until the time of the issuance of the patent and file a request for reconsideration of the patent term adjustment pursuant to 37 CFR 1.705(d). As the USPTO does not calculate the amount of time earned pursuant to 37 CFR 1.702(b) until the time of the issuance of the patent, the Office will consider any request for reconsideration of the patent term adjustment due to an error in the calculation of 37 CFR 1.702(b) to be timely if the request for reconsideration is filed within two months of the issuance of the patent. However, as to all other bases for contesting the initial determination of patent term adjustment received with the notice of allowance, applicant must timely file an application for patent term adjustment prior to the payment of the issue fee[2].

The $200.00 fee set forth in 37 CFR 1.18(e) for consideration of the application for patent term adjustment under 37 CFR 1.705(b) is required and will be charged to counsel's deposit account.

Any request for reconsideration of the patent term adjustment indicated on the patent must be timely filed within 2 months

---

2 For example, if applicant disputes both the calculation of patent term adjustment under 37 CFR 1.702(a)(1) for Office failure to mail a first Office action or notice of allowance not later than fourteen months after the date on which the application was filed and under 37 CFR 1.702(b) for Office failure to issue a patent within three years of the actual filing date of the application, then applicant must still timely file an application for patent term adjustment prior to the payment of the issue fee to contest the calculation of Office delay in issuing a first Office action or notice of allowance. See 37 CFR 1.705(b) and 35 U.S.C. 154(b)(3)(B). A dispute as to the calculation of the §1.702(a)(1) period raised on request for reconsideration of patent term adjustment under 37 CFR 1.705(d) will be dismissed as untimely filed.

after issuance pursuant to 37 CFR 1.705(d) and must include payment of the required fee under 37 CFR 1.18(e).

The Office of Data Management has been advised of this decision. This application is being referred to the Office of Data Management for issuance of the patent.

Telephone inquiries specific to this decision should be directed to Senior Petitions Attorney Douglas I. Wood at (571) 272-3231.

Christina Tartera Donnell for

Anthony Knight
Supervisor
Office of Petitions

UNITED STATES PATENT AND TRADEMARK OFFICE

UNITED STATES DEPARTMENT OF COMMERCE
United States Patent and Trademark Office
Address: COMMISSIONER FOR PATENTS
P.O. Box 1450
Alexandria, Virginia 22313-1450
www.uspto.gov

FOLEY & LARDNER LLP
P.O. BOX 80278
SAN DIEGO, CA 92138-0278

Mail Date: 06/28/2010

Applicant	: Michael R. Downes	: DECISION ON REQUEST FOR
Patent Number	: 7647217	: RECALCULATION of PATENT
Issue Date	: 01/12/2010	: TERM ADJUSTMENT IN VIEW
Application No	: 10/535,042	: OF WYETH AND NOTICE OF INTENT TO
Filed	: 01/09/2006	: ISSUE CERTIFICATE OF CORRECTION
		:

The Request for Recalculation is **GRANTED** to the extent indicated.

The patent term adjustment has been determined to be **860** days. The USPTO will *sua sponte* issue a certificate of correction reflecting the amount of PTA days determined by the recalculation.

Prior to the issuance of the certificate of correction, the USPTO will afford patentee an opportunity to be heard and request reconsideration. Accordingly, patentee has **one month or thirty (30) days**, whichever is longer, to file a request for reconsideration of this patent term adjustment calculation. See 35 U.S.C. 154(b)(3)(B)(ii) and 37 CFR 1.322(a)(4). No extensions of time will be granted under 37 CFR 1.136.

Patentee should use document code PET.OP if electronically filing a request for reconsideration of this patent term adjustment calculation. The patentee must also include the information required by 37 CFR 1.705(b)(2) and the fee required by 37 CFR 1.18(e). If patentee does not file a timely request for reconsideration of this patent term adjustment calculation including the information required by 37 CFR 1.705(b)(2) and the fee required by 37 CFR 1.18(e), the USPTO will issue a certificate of correction reflecting the PTA determination noted above.

Patentee should be aware that in order to preserve the right to review in the United States District Court for the District of Columbia of the USPTO patent term adjustment determination, patentee must ensure that he or she also take the steps required under 35 U.S.C. 154(b)(4)(A) in a timely manner. Nothing in the request for recalculation should be construed as providing an alternative time frame for commencing a civil action under 35 U.S.C. 154(b)(4)(A).

Any questions concerning this decision should be directed to the Office of Patent Legal Administration at 571-272-7702.

UNITED STATES PATENT AND TRADEMARK OFFICE

Commissioner for Patents
United States Patent and Trademark Office
P.O. Box 1450
Alexandria, VA 22313-1450
www.uspto.gov

FOLEY & LARDNER LLP
P.O. BOX 80278
SAN DIEGO CA 92138-0278

COPY MAILED
JAN 25 2010

In re Application of :
DOWNES ET AL. :
Application No. 10/535,043 : ON APPLICATION FOR
Filed: August 31, 2009 : PATENT TERM ADJUSTMENT
Atty. Docket No. SALK3130-1S :
(088802-9706)

This is in response to the "APPLICATION FOR PATENT TERM ADJUSTMENT UNDER 37 C.F.R. §1.705", filed August 31, 2009, which is properly treated under 37 C.F.R. § 1.705(b). Applicants submit that the correct patent term adjustment to be indicated on the patent is nine hundred ninety-nine (999) days, not four hundred fifty-nine (459) days as calculated by the Office as of the mailing of the initial determination of patent term adjustment. Applicants seek this correction solely on the basis that the Office will take in excess of three years to issue this patent.

As the instant application for patent term adjustment requests reconsideration of the patent term adjustment as it relates to the Office's failure to issue the patent within three years of the filing date, the application for patent term adjustment under 37 CFR 1.705(b) is **DISMISSED as PREMATURE**.

Knowledge of the actual date the patent issues is required to calculate the amount, if any, of additional patent term patentees are entitled to for Office failure to issue the patent within three years. See 37 CFR 1.702(b). (This is true even where a request for continued examination (RCE) was filed). The computer will not undertake the § 1.702(b) calculation until the actual date of issuance of the patent has been determined. Likewise, the computer will not calculate any further Office delay under 37 CFR 1.702(a)(4) or applicant delay under 37 CFR 1.704(c)(10) until the actual date of issuance of the patent has been determined. As such, the Office cannot make a

determination on the correctness of the patent term adjustment until the patent has issued.

Requesting reconsideration of the patent term adjustment to be indicated on the patent under 37 CFR 1.705(b) based on the initial determination of patent term adjustment and a projected issuance date of the patent (or even the filing date of the request for continued examination) is premature. Accordingly, it is appropriate to dismiss such a request as premature.

Rather than file an application for patent term adjustment under 37 CFR 1.705(b) contesting the 37 CFR 1.702(b) calculation at the time of the mailing of the notice of allowance, applicants are advised that they may wait until the time of the issuance of the patent and file a request for reconsideration of the patent term adjustment pursuant to 37 CFR 1.705(d). As the USPTO does not calculate the amount of time earned pursuant to 37 CFR 1.702(b) until the time of the issuance of the patent, the Office will consider any request for reconsideration of the patent term adjustment due to an error in the calculation of 37 CFR 1.702(b) to be timely if the request for reconsideration is filed within two months of the issuance of the patent. However, as to all other bases for contesting the initial determination of patent term adjustment received with the notice of allowance, applicants must timely file an application for patent term adjustment prior to the payment of the issue fee.[1]

The Office acknowledges that Deposit Account No. 19-0741 has been charged the $200.00 fee set forth in 37 CFR 1.18(e) for consideration of the application for patent term adjustment under 37 CFR 1.705(b) pursuant to Petitioner's authorization to charge Deposit Account No. 19-0741 in the last paragraph on page 2 of the petition filed August 31, 2009.

---

[1] For example, if applicants dispute both the calculation of patent term adjustment under 37 CFR 1.702(a)(1) for Office failure to mail a first Office action or notice of allowance not later than fourteen months after the date on which the application was filed, and under 37 CFR 1.702(b) for Office failure to issue a patent within three years of the actual filing date of the application, then applicants must still timely file an application for patent term adjustment prior to the payment of the issue fee to contest the calculation of Office delay in issuing a first Office action or notice of allowance. See 37 CFR 1.705(b) and 35 U.S.C. 154(b)(3)(B). A dispute as to the calculation of the § 1.702(a)(1) period raised on request for reconsideration of patent term adjustment under 37 CFR 1.705(d) will be dismissed as untimely filed.

Any request for reconsideration of the patent term adjustment indicated on the patent must be timely filed within two months after issuance pursuant to 37 CFR 1.705(d) and must include payment of the required fee under 37 CFR 1.18(e).

The Office of Data Management has been advised of this decision. This application is being referred to the Office of Data Management for issuance of the patent.

Telephone inquiries specific to this decision should be directed to Gay Ann Spahn at (571) 272-8011.

Christina Tartera Donnell

Anthony Knight
Supervisor
Office of Petitions

UNITED STATES PATENT AND TRADEMARK OFFICE

UNITED STATES DEPARTMENT OF COMMERCE
United States Patent and Trademark Office
Address: COMMISSIONER FOR PATENTS
P.O. Box 1450
Alexandria, Virginia 22313-1450
www.uspto.gov

FOLEY & LARDNER LLP
P.O. BOX 80278
SAN DIEGO, CA 92138-0278

Mail Date: 05/07/2010

Applicant	: Michael R Downes	: DECISION ON REQUEST FOR
Patent Number	: 7671085	: RECALCULATION of PATENT
Issue Date	: 03/02/2010	: TERM ADJUSTMENT IN VIEW
Application No	: 10/535,043	: OF WYETH
Filed	: 12/09/2005	:
		:

The Patentee's Request for Recalculation is **DISMISSED.**

This Request is deemed ineligible for consideration for one or more of the following reasons:

(A). The patent for which PTA recalculation is requested is either a design or reissue application or is a reexamination proceeding;

(B). The patent for which PTA recalculation is requested resulted from a utility or plant application filed under 35 USC 111(a) before May 29, 2000 and no CPA filed in the application on/after May 29, 2000;

(C). The patent for which PTA recalculation is requested resulted from an international application in which the international filing date was before May 29, 2000 and no CPA filed in the application on/after May 29, 2000;

(D). The patent for which PTA recalculation is requested issued on/after March 2, 2010;

(E). The Request for Recalculation was filed more than 180 days after the grant date of the patent and the request was not filed within two months of a dismissal of a request for reconsideration of the of the patent term under 37 CFR 1.705(d);

(F). The Request for Recalculation is not solely limited to USPTO pre-Wyeth interpretation of 35 U.S.C. 154(b)(2)(A);

or

(G). A civil action was filed pursuant to 35 U.S.C. 154(b)(4)(A)concerning the same patent at issue in this request.

Patentee may file a reply to this decision dismissing the Request for Recalculation. Patentee must file such reply within one month or thirty days, whichever is longer, of the mail date of the decision dismissing the Request for Recalculation. No fee is required if patentee is asserting in the reply that the dismissal for ineligibility is improper.

Patentee should use document code PET.OP if electronically filing a reply to this dismissal. If the USPTO finds that the request was improperly deemed ineligible, the USPTO will mail applicant a recalculation determination.

Patentee should be aware that in order to preserve the right to review in the United States District Court for the District of Columbia of the USPTO patent term adjustment determination, patentee must ensure that he or she also take the steps required under 35 U.S.C. 154(b)(4)(A). Nothing in the request for recalculation should be construed as providing an alternative time frame for commencing a civil action under 35 U.S.C. 154 (b)(4)(A).

Any questions concerning this decision should be directed to the Office of Patent Legal Administration at 571-272-7702.

UNITED STATES PATENT AND TRADEMARK OFFICE

Commissioner for Patents
United States Patent and Trademark Office
P.O. Box 1450
Alexandria, VA 22313-1450
www.uspto.gov

HUNTLEY & ASSOCIATES
1105 NORTH MARKET STREET
P.O. BOX 948
WILMINGTON, DE 19899-0948

COPY MAILED

AUG 1 0 2006

OFFICE OF PETITIONS

In re Application of	:	
Utsunomiya	:	
Application No. 10/535,045	:	DECISION ON PETITION
Filed: May 13, 2005	:	TO WITHDRAW
Attorney Docket No. Toyo-5	:	FROM RECORD
	:	

This is a decision on the Request to Withdraw as attorney or agent of record under 37 C.F.R. § 1.36(b), filed March 27, 2006.

The request is **NOT APPROVED**.

A grantable request to withdraw as attorney/agent of record must be signed by every attorney/agent seeking to withdraw or contain a clear indication that one attorney is signing on behalf of another/others. A request to withdraw will not be approved unless at least 30 (thirty) days would remain between the date of approval and the later of the expiration date of a time to file a response or the expiration date of the maximum time period which can be extended under 37 C.F.R. § 1.136(a).

The Office cannot approve the request at this time since the reasons provided do not meet any of the conditions under the mandatory or permissive categories enumerated in 37 CFR 10.40. Section 10.40 of Title 37 of the Code of Federal Regulation states, "[a] practitioner shall not withdraw from employment in a proceeding before the Office without permission from the Office[.]" More specifically, 37 CFR 10.40 states, "[i]f paragraph (b) of this section is not applicable, a practitioner may not request permission to withdraw in matter pending before the Office unless such request or such withdrawal is" for one the permissive reasons listed in 37 CFR 10.40(c). The reasons set forth in the request, transfer of application to Brian A. Gomez, a former associate in the law firm of Huntley & Associates, does not meet any the conditions set forth in 37 CFR 10.40.

All future communications from the Office will continue to be directed to the above-listed address until otherwise notified by applicant.

Telephone inquiries concerning this decision should be directed to April Wise at 571-272-1642.

for Denise Pothier
Petitions Examiner
Office of Petitions

cc: GOMEZ INTERNATIONAL PATENT OFFICE, LLC
1501 N. RODNEY STREET
SUITE 101
WILMINGTON DE 19806

#8

UNITED STATES PATENT AND TRADEMARK OFFICE

COMMISSIONER FOR PATENTS
UNITED STATES PATENT AND TRADEMARK OFFICE
P.O. BOX 1450
ALEXANDRIA, VA 22313-1450
www.uspto.gov

27 JAN 2006

Ronald B. Sherer
Bartlett & Sherer
103 South Shaffer Drive
New Freedom, PA 17349

In re Application of IMHOF	:	
U.S. Application No.: 10/535,048	:	
PCT Application No.: PCT/GB03/00265	:	
Int. Filing Date: 22 January 2003	:	DECISION
Priority Date Claimed: 23 January 2002	:	
Attorney Docket No.: UEL-036-PCT	:	
For: METHOD AND EQUIPMENT FOR MEASURING VAPOUR FLUX FROM SERVICES	:	

This is in response to applicant's "Petition for Revival of an Application for Patent Abandoned Unintentionally Under 37 CFR 1.137(b)" filed 19 January 2006.

BACKGROUND

On 22 January 2003, applicant filed international application PCT/GB03/00265, which claimed priority of an earlier United Kingdom application filed 23 January 2002. A copy of the international application was communicated to the USPTO from the International Bureau on 31 July 2003. The thirty-month period for paying the basic national fee in the United States expired on 23 July 2004.

International application PCT/GB03/00265 became abandoned as to the United States for failure to timely pay the basic national fee.

On 19 January 2006, applicant filed the present petition under 37 CFR 1.137(b).

DISCUSSION

Under 37 CFR 1.137(b), a petition requesting that an application be revived on the grounds of unintentional abandonment must be accompanied by: (1) the required reply unless previously filed, (2) the petition fee as set forth in 37 CFR 1.17(m), (3) a statement that the entire

delay in filing the required reply from the due date for the reply until the filing of a grantable petition was unintentional, and (4) a terminal disclaimer if the application was filed before 08 June 1995.

With regard to item (1), applicant has provided the required basic national fee under 35 U.S.C. 371.

With regard to item (2), applicant has provided the required petition fee.

With regard to item (3), applicant has provided the required statement.

With regard to item (4), because the international application was filed after 08 June 1995, no terminal disclaimer is required.

CONCLUSION

For the reasons above, the petition under 37 CFR 1.137(b) is GRANTED.

This application is being forwarded to the United States Designated/Elected Office (DO/EO/US) for further processing in accordance with this decision, including preparation and mailing of a Notification of Missing Requirements under 35 U.S.C. 371 (Form PCT/DO/EO/905) indicating that a properly executed oath or declaration in compliance with 37 CFR 1.497 must be filed.

Bryan Tung
PCT Legal Examiner
Office of PCT Legal Administration

Telephone: 571-272-3303
Facsimile: 571-273-0459

UNITED STATES PATENT AND TRADEMARK OFFICE

UNITED STATES DEPARTMENT OF COMMERCE
United States Patent and Trademark Office
Address: COMMISSIONER FOR PATENTS
P.O. Box 1450
Alexandria, Virginia 22313-1450
www.uspto.gov

PHILIPS INTELLECTUAL PROPERTY & STANDARDS
P.O. BOX 3001
BRIARCLIFF MANOR, NY 10510

Mail Date: 04/21/2010

Applicant	: Gerard De Haan	: DECISION ON REQUEST FOR
Patent Number	: 7623738	: RECALCULATION of PATENT
Issue Date	: 11/24/2009	: TERM ADJUSTMENT IN VIEW
Appliction No	: 10/535,057	: OF WYETH AND NOTICE OF INTENT TO
Filed	: 05/13/2005	: ISSUE CERTIFICATE OF CORRECTION
		:

The Request for Recalculation is **GRANTED** to the extent indicated.

The patent term adjustment has been determined to be **659** days. The USPTO will *sua sponte* issue a certificate of correction reflecting the amount of PTA days determined by the recalculation.

Prior to the issuance of the certificate of correction, the USPTO will afford patentee an opportunity to be heard and request reconsideration. Accordingly, patentee has **one month or thirty (30) days**, whichever is longer, to file a request for reconsideration of this patent term adjustment calculation. See 35 U.S.C. 154(b)(3)(B)(ii) and 37 CFR 1.322(a)(4). No extensions of time will be granted under 37 CFR 1.136.

Patentee should use document code PET.OP if electronically filing a request for reconsideration of this patent term adjustment calculation. The patentee must also include the information required by 37 CFR 1.705(b)(2) and the fee required by 37 CFR 1.18(e). If patentee does not file a timely request for reconsideration of this patent term adjustment calculation including the information required by 37 CFR 1.705(b)(2) and the fee required by 37 CFR 1.18(e), the USPTO will issue a certificate of correction reflecting the PTA determination noted above.

Patentee should be aware that in order to preserve the right to review in the United States District Court for the District of Columbia of the USPTO patent term adjustment determination, patentee must ensure that he or she also take the steps required under 35 U.S.C. 154(b)(4)(A) in a timely manner. Nothing in the request for recalculation should be construed as providing an alternative time frame for commencing a civil action under 35 U.S.C. 154(b)(4)(A).

Any questions concerning this decision should be directed to the Office of Patent Legal Administration at 571-272-7702.

UNITED STATES PATENT AND TRADEMARK OFFICE

UNITED STATES DEPARTMENT OF COMMERCE
United States Patent and Trademark Office
Address: COMMISSIONER FOR PATENTS
P.O. Box 1450
Alexandria, Virginia 22313-1450
www.uspto.gov

STMicroelectronics Inc.
c/o WOLF, GREENFIELD & SACKS, P.C.
600 Atlantic Avenue
BOSTON, MA 02210-2206

Mail Date: 04/20/2010

Applicant	: Catherine Robert	: DECISION ON REQUEST FOR
Patent Number	: 7673121	: RECALCULATION of PATENT
Issue Date	: 03/02/2010	: TERM ADJUSTMENT IN VIEW
Appliction No	: 10/535,063	: OF WYETH
Filed	: 05/09/2006	:
		:

The Patentee's Request for Recalculation is **DISMISSED.**

This Request is deemed ineligible for consideration for one or more of the following reasons:

(A). The patent for which PTA recalculation is requested is either a design or reissue application or is a reexamination proceeding;

(B). The patent for which PTA recalculation is requested resulted from a utility or plant application filed under 35 USC 111(a) before May 29, 2000 and no CPA filed in the application on/after May 29, 2000;

(C). The patent for which PTA recalculation is requested resulted from an international application in which the international filing date was before May 29, 2000 and no CPA filed in the application on/after May 29, 2000;

(D). The patent for which PTA recalculation is requested issued on/after March 2, 2010;

(E). The Request for Recalculation was filed more than 180 days after the grant date of the patent and the request was not filed within two months of a dismissal of a request for reconsideration of the of the patent term under 37 CFR 1.705(d);

(F). The Request for Recalculation is not solely limited to USPTO pre-Wyeth interpretation of 35 U.S.C. 154(b)(2)(A);

or

(G). A civil action was filed pursuant to 35 U.S.C. 154(b)(4)(A)concerning the same patent at issue in this request.

Patentee may file a reply to this decision dismissing the Request for Recalculation. Patentee must file such reply within one month or thirty days, whichever is longer, of the mail date of the decision dismissing the Request for Recalculation. No fee is required if patentee is asserting in the reply that the dismissal for ineligibility is improper.

Patentee should use document code PET.OP if electronically filing a reply to this dismissal. If the USPTO finds that the request was improperly deemed ineligible, the USPTO will mail applicant a recalculation determination.

Patentee should be aware that in order to preserve the right to review in the United States District Court for the District of Columbia of the USPTO patent term adjustment determination, patentee must ensure that he or she also take the steps required under 35 U.S.C. 154(b)(4)(A). Nothing in the request for recalculation should be construed as providing an alternative time frame for commencing a civil action under 35 U.S.C. 154 (b)(4)(A).

Any questions concerning this decision should be directed to the Office of Patent Legal Administration at 571-272-7702.

#5

UNITED STATES PATENT AND TRADEMARK OFFICE

05 JAN 2006

Commissioner for Patents
United States Patent and Trademark Office
P.O. Box 1450
Alexandria, VA 22313-1450
www.uspto.gov

Geza C. Ziegler, Jr.
PERMAN & GREEN, LLP
425 post Road
Fairfield, CT 06824

In re Application of:	:	
MAKELA, Jakke, et al.	:	DECISION ON PETITION
U.S. Application No.: 10/535,074	:	
PCT No.: PCT/FI2003/000913	:	
International Filing Date: 01 December 2003	:	
Priority Date: 29 November 2002	:	
Atty Docket No.: 324-012224-US (PAR)	:	
For: PREDICTIVE PROBABILITY	:	
ARRANGEMENT FOR LOADING	:	
FILES OVER AN INTERFACE	:	

This decision is issued in response to the "Petition To Withdraw Holding Of Abandonment" filed 15 November 2005, treated herein as a petition under 37 CFR 1.181. No petition fee is required.

BACKGROUND

On 01 December 2003, applicants filed international application PCT/FI2003/000913 which claimed a priority date of 29 November 2002 and which designated the United States. On 17 June 2004, a copy of the international application was communicated to the United States Patent And Trademark Office (USPTO) by the International Bureau (IB). The deadline for submission of the basic national fee was thirty months from the priority date, i.e., 29 May 2005.

On 13 May 2005, applicants filed a Transmittal Letter for entry into the national stage in the United States accompanied by, among other materials, a payment of $300 for the U.S. basic national fee.

On 18 October 2005, the United States Designated/Elected Office (DO/EO/US) mailed a Notification Of Abandonment (Form PCT/DO/EO/909) indicating that the application was abandoned for failure to provide the "full U.S. Basic National Fee by 30 months."

On 15 November 2005, the petition considered herein was filed. The petition asserts that applicants' 13 March 2005 submission included a timely payment of the U.S. Basic National Fee and that the holding of abandonment should therefore be withdrawn. The petition is accompanied by evidence of the timely payment, including a copy of a return postcard that itemizes the 13 May 2005 submission, specifically itemizes the $300 fee payment check, and bears a USPTO receipt stamp dated 13 May 2005.

DISCUSSION

Based on the statements in the present petition, the attached return postcard, and USPTO records, it is concluded that applicants' 13 May 2005 submission initiating the present national stage application included payment of the $300 basic national fee. This payment was filed prior to the expiration of thirty months from the priority date (i.e., 29 May 2005).

The Notification of Abandonment mailed 18 October 2005, based as it was on applicants' purported failure to pay the basic national fee prior to the expiration of the thirty-month deadline, is appropriately vacated.

CONCLUSION

The petition to withdraw the holding of abandonment is **GRANTED**.

The Notification of Abandonment (Form PCT/DO/EO/909) mailed 18 October 2005 is hereby **VACATED**.

This application is being returned to the National Stage Processing Branch of the International Division for further processing in accordance with this decision, including the mailing of a Notification Of Missing Requirements (Form PCT/DO/EO/905) requiring submission of an oath or declaration in compliance with 37 CFR 1.497, as well as the Search Fee, the Examination Fee, any appropriate claims fees, and the surcharge for filing the oath or declaration later than thirty months after the priority date.

Richard M. Ross
PCT Petitions Attorney
Office Of PCT Legal Administration
Telephone: (571) 272-3296
Facsimile: (571) 273-0459

UNITED STATES PATENT AND TRADEMARK OFFICE

Commissioner for Patents
United States Patent and Trademark Office
P.O. Box 1450
Alexandria, VA 22313-1450
www.uspto.gov

JOHN S. PRATT, ESQ
KILPATRICK STOCKTON, LLP
1100 PEACHTREE STREET
ATLANTA GA 30309

COPY MAILED

JUN 0 7 2007

OFFICE OF PETITIONS

In re Application of	:	
TREMBLAY, Jean-Robert	:	
Application No. 10/535,078	:	DECISION ON PETITION
Filed: May 13, 2005	:	TO WITHDRAW
Attorney Docket No. O0004/315358	:	FROM RECORD
	:	

This is a decision on the Request to Withdraw as attorney or agent of record under 37 C.F.R. § 1.36(b), filed August 21,2006.

The request is **NOT APPROVED** as moot.

A review of the file record indicates that the power of attorney to KILPATRICK STOCKTON LLP has been revoked by the assignee of the patent application on March 14, 2007. Accordingly, the request to withdraw under 37 C.F.R. § 1.36(b) is moot.

All future communications from the Office will continue to be directed to the below-listed address until otherwise notified by applicant.

Telephone inquires concerning this decision should be directed to the undersigned at 571-272-7253.

Monica A. Graves
Petitions Examiner
Office of Petitions

cc: **LOUIS TESSIER**
P.O. BOX 54029
TMR, QC H3P 3H4
CANADA

UNITED STATES PATENT AND TRADEMARK OFFICE

Commissioner for Patents
United States Patent and Trademark Office
P.O. Box 1450
Alexandria, VA 22313-1450
www.uspto.gov

COPY MAILED

JUL 11 2008

OFFICE OF PETITIONS

OLIFF & BERRIDGE, PLC
P.O. BOX 320850
ALEXANDRIA, VA 22320-4850

In re Application of :
Naohiro Yoshida et al :
Application No. 10/535,094 : ON PETITION
Filed: May 16, 2005 :
Attorney Docket No. 123407

This is a decision on the petition, filed July 10, 2008 under 37 CFR 1.313(c)(2) to withdraw the above-identified application from issue after payment of the issue fee.

The petition is **GRANTED**.

The above-identified application is withdrawn from issue for consideration of a submission under 37 CFR 1.114 (request for continued examination). See 37 CFR 1.313(c)(2).

Petitioner is advised that the issue fee paid on May 22, 2008 in the above-identified application cannot be refunded. If, however, the above-identified application is again allowed, petitioner may request that it be applied towards the issue fee required by the new Notice of Allowance.[1]

Telephone inquiries should be directed to Irvin Dingle at (571) 272-3210.

This matter is being referred to Technology Center AU 1795 for processing of the request for continued examination under 37 CFR 1.114 and for consideration of the concurrently filed Information Disclosure Statement.

Irvin Dingle
Petitions Examiner
Office of Petitions

---

[1] The request to apply the issue fee to the new Notice may be satisfied by completing and returning the new Issue Fee Transmittal Form PTOL-85(b), which includes the following language thereon: Commissioner for Patents is requested to apply the Issue Fee and Publication Fee (if any) or re-apply any previously paid issue fee to the application identified above. Petitioner is advised that, whether a fee is indicated as being due or not, the Issue Fee Transmittal Form **must** be completed and timely submitted to avoid abandonment. Note the language in bold text on the first page of the Notice of Allowance and Fee(s) Due (PTOL-85).

#5

UNITED STATES PATENT AND TRADEMARK OFFICE

Commissioner for Patents
United States Patent and Trademark Office
P.O. Box 1450
Alexandria, VA 22313-1450
www.uspto.gov

15 SEP 2006

NATH & ASSOCIATES
112 South West Street
Alexandria VA 22314

In re Application of SHALOM et al. Application No.: 10/535,103 PCT No.: PCT/IL03/00974 Int. Filing: 12 November 2003 Priority Date: 14 November 2002 Attorney Docket No.: 26784U For: PERISTALTIC PUMP	DECISION ON PETITION UNDER 37 CFR 1.47(a)

This is a decision on applicant's petition under 37 CFR 1.47(a), filed in the United States Patent and Trademark Office (USPTO) on 26 April 2006, to accept the application without the signature of joint inventor, Shaul Ozeri. Petitioner requests a five (5) month extension of time, which is granted.

BACKGROUND

On 16 May 2005, applicant filed a transmittal letter (PTO-1390) requesting entry into the national stage in the United States of America under 35 U.S.C. § 371. Filed with the Transmittal Letter was, *inter alia*, the requisite basic national fee and an executed declaration.

On 26 September 2005, a Notification of Missing Requirements (FORM PCT/DO/EO/905) was mailed to applicant indicating *inter alia*, that an oath or declaration in accordance with 37 CFR 1.497(a) and (b) and the surcharge for filing the oath or declaration after the thirty month period was required.

On 26 April 2006, applicant filed the instant petition along with a declaration, executed by the joint inventors on behalf of the nonsigning inventor Shaul Ozeri. The petition under 37 CFR 1.47(a) in an attempt to satisfy the requirements of 35 U.S.C. 371(c)(4) requested the acceptance of the application without the signature of inventor, Shaul Ozeri alleging that Mr. Ozeri refuses to sign the application.

DISCUSSION

A petition under 37 CFR §1.47(a) must be accompanied by (1) the fee under 37 CFR §1.17(g), (2) factual proof that the non-signing joint inventor(s) refuses to execute the application or cannot be reached after diligent effort, (3) a statement of the last known address of the non-signing inventor(s), and (4) an oath or declaration

by each available joint inventor on his or her own behalf and on behalf of the non-signing joint inventor(s).

The petition included the requisite petition fee, satisfying Item (1). Item (3) is satisfied because the last known address of non-signing inventor, Shaul Ozeri, was provided. With regard to item (4), the declaration executed by the available joint inventors on their behalf and on behalf of the non-signing inventor was submitted and satisfies the requirements of 37 CFR 1.47(a).

With respect to Item (2) above, Petitioner provided the statements of Eran Resheff , CEO of Q-Core Ltd. (assignee) and Dr. Ben Spungin, patent attorney for assignee, in support of the petition under 37 CFR 1.47(a). Mr. Resheff states that he "requested from each of the four inventors, including Mr. Ozeri, to sign the two documents [the Declaration and Power of Attorney and Assignment documents for this application]". It is clear from his statement and the copy of his letter to Mr. Ozeri that Mr. Resheff did not send a complete copy of the patent application along with declaration and assignment forms to Mr. Ozeri's address. Moreover, although Mr. Resheff states that he has "spoken several times to Mr. Ozeri about signing the two documents" and further indicates that Mr. Ozeri states that "he will not sign the two documents", no details of Mr. Ozeri's refusal to sign the application were provided. *See* MPEP 409.03(d) below.

Dr. Spungin does not have first hand knowledge of the mailing of the 14 November 2005 letter to the nonsigning inventor. Furthermore, the proof of delivery by the Israeli post office (annex C) was not translated. An English translation of any documentation regarding the nonsigning inventor's refusal to sign is required.

From the evidence presented, it is clear that neither Mr. Resheff or Dr. Spungin provided inventor Ozeri with a complete copy of the application papers, including *specification, claims and drawings* and declaration. What is required is that Mr. Ozeri be presented with a copy of all of the national stage application papers (oath and declaration, specification, including claims and drawings) for this application.

Section 409.03(d) of the Manual of Patent Examining Procedure (MPEP), Proof of Unavailability or Refusal, states, in pertinent part:

> *A refusal by an inventor to sign an oath or declaration when the inventor has not been presented with the application papers does not itself suggest that the inventor is refusing to join the application unless it is clear that the inventor understands exactly what he or she is being asked to sign and refuses to accept the application papers.* A copy of the application papers should be sent to the last known address of the nonsigning inventor, or , if the nonsigning inventor is represented by counsel, to the address of the nonsigning inventor's attorney.... *It is*

> *reasonable to require that the inventor be presented with the application papers before a petition under 37 CFR 1.47 is granted since such a procedure ensures that the inventor is apprised of the application to which the oath or declaration is directed. In re Gray,* 115 USPQ 80 (Comm'r Pat. 1956)
>
> Where a refusal of the inventor to sign the application papers is alleged, the circumstances of the presentation of the application papers and of the refusal must be specified in a statement of facts by the person who presented the inventor with the application papers and/or to whom the refusal was made. Statements by a party not present when an oral refusal is made will not be accepted.
>
> Proof that a *bona fide* attempt was made to present a copy of the application papers (specification, including claims, drawings, and oath or declaration) to the nonsigning inventor for signature, but the inventor refused to accept delivery of the papers or expressly stated that the application papers should not be sent, may be sufficient. *When there is an express oral refusal, that fact along with the time and place of the refusal must be stated in the statement of facts.* When there is an express written refusal, a copy of the document evidencing that refusal must be made part of the statement of facts. The document may be redacted to remove material not related to the inventor's reasons for refusal.
>
> When it is concluded by the 37 CFR 1.47 applicant that a nonsigning inventor's conduct constitutes a refusal, all facts upon which the conclusion is based should be stated in a statement of facts in support of the petition or directly in the petition. If there is documentary evidence to support facts alleged in the petition or any statement of facts, such evidence should be submitted. *Whenever a nonsigning inventor gives a reason for refusing to sign the application oath or declaration, that reason should be stated in the petition.*

(Emphasis added.)

In sum, Petitioner has satisfied Items (1), (3) and (4) above. However, Petitioner has not satisfied Item (2) by demonstrating: (1) a *bona fide* attempt was made to present a *copy of the application papers for U.S. application 10/535,103 (specification, including claims, drawings, and declaration*) to the nonsigning inventor for his signature and (2) Mr. Ozeri's refusal to sign, either in writing or by telephone, these documents.

For the reasons set forth above, the evidence submitted does not support a finding that the nonsigning inventor refuses to sign the application at this time. Accordingly, it is inappropriate to accord the national stage application status under

37 CFR §1.47(a) at this time.

CONCLUSION

The petition under 37 CFR §1.47(a) is **DISMISSED WITHOUT PREJUDICE**.

Any reconsideration on the merits of the petition under 37 CFR §1.47(a) must be filed within TWO (2) MONTHS from the mail date of this decision. Any reconsideration request should include a cover letter entitled "Renewed Petition Under 37 CFR §1.47(a)." No petition fee is required. Any further extensions of time available may be obtained under 37 CFR 1.136(a).

Any further correspondence with respect to this matter should be addressed to the Mail Stop PCT, Commissioner for Patents, Office of PCT Legal Administration, P.O. Box 1450, Alexandria, Virginia 22313-1450, with the contents of the letter marked to the attention of the Office of PCT Legal Administration.

Cynthia M. Kratz
Attorney Advisor
PCT Legal Office
Office of PCT Legal Administration

Telephone: (571) 272-3286
Facsimile (571) 272-0459

23 JAN 2007

UNITED STATES PATENT AND TRADEMARK OFFICE

Commissioner for Patents
United States Patent and Trademark Office
P.O. Box 1450
Alexandria, VA 22313-1450
www.uspto.gov

SHAUL OZERI
42 GORINMAN STREET
RAMAT-AVIV
TEL-AVIV
69971 ISRAEL

In re Application of SHALOM et al.	:
Application No.: 10/535,103	: DECISION ON
PCT No.: PCT/IL03/00974	:
Int. Filing: 12 November 2003	: RENEWED PETITION
Priority Date: 14 November 2002	:
Attorney Docket No.: 26784U	:UNDER 37 CFR 1.47(a)
For: PERISTALTIC PUMP	:

Dear Mr. Ozeri:

You are named as an inventor in the above identified United States patent application, filed under the provisions of 37 CFR 1.47(a) and 35 U.S.C. § 116. Should a patent be granted, you will be designated as an inventor.

As a named inventor, you are entitled to inspect any paper in the file wrapper of the application, order copies of all or any part thereof (at a prepaid cost per 37 CFR 1.19) or to make your position of record in the application. Alternatively, you may arrange to do any of the preceding through a registered patent agent or attorney presenting written authorization from you. If you care to join in the application, counsel of record (see below) would presumably assist you. Joining in the application would entail the filing of an appropriate oath or declaration by you pursuant to 37 CFR 1.63.

Cynthia M. Kratz

Cynthia M. Kratz
Attorney Advisor
PCT Legal Office

Telephone: (571)272 -3286

NATH & ASSOCIATES
112 South West Street
Alexandria VA 22314

23 JAN 2007

#7

UNITED STATES PATENT AND TRADEMARK OFFICE

Commissioner for Patents
United States Patent and Trademark Office
P.O. Box 1450
Alexandria, VA 22313-1450
www.uspto.gov

NATH & ASSOCIATES
112 South West Street
Alexandria VA 22314

In re Application of SHALOM et al.	:
Application No.: 10/535,103	: DECISION ON
PCT No.: PCT/IL03/00974	:
Int. Filing: 12 November 2003	: RENEWED PETITION
Priority Date: 14 November 2002	:
Attorney Docket No.: 26784U	:UNDER 37 CFR 1.47(a)
For: PERISTALTIC PUMP	:

This is a decision on applicant's renewed petition under 37 CFR 1.47(a), filed in the United States Patent and Trademark Office (USPTO) on 15 November 2006, to accept the application without the signature of joint inventor, Shaul Ozeri.

BACKGROUND

On 16 May 2005, applicant filed a transmittal letter (PTO-1390) requesting entry into the national stage in the United States of America under 35 U.S.C. § 371. Filed with the Transmittal Letter was, *inter alia*, the requisite basic national fee and an executed declaration.

On 26 September 2005, a Notification of Missing Requirements (FORM PCT/DO/EO/905) was mailed to applicant indicating *inter alia*, that an oath or declaration in accordance with 37 CFR 1.497(a) and (b) and the surcharge for filing the oath or declaration after the thirty month period was required.

On 26 April 2006, applicant filed the instant petition along with a declaration, executed by the joint inventors on behalf of the nonsigning inventor Shaul Ozeri. The petition under 37 CFR 1.47(a) in an attempt to satisfy the requirements of 35 U.S.C. 371(c)(4) requested the acceptance of the application without the signature of inventor, Shaul Ozeri alleging that Mr. Ozeri refuses to sign the application.

On 15 September 2006, a decision dismissing the petition was mailed indicating that Petitioner had not demonstrated that a *bona fide* attempt was made to present a copy of the application papers for U.S. application 10/535,103 (specification, including claims, drawings, and declaration) to the nonsigning inventor for his signature and Mr. Ozeri's refusal to sign.

DISCUSSION

A petition under 37 CFR §1.47(a) must be accompanied by (1) the fee under 37 CFR §1.17(g), (2) factual proof that the non-signing joint inventor(s) refuses to execute the application or cannot be reached after diligent effort, (3) a statement of the last known address of the non-signing inventor(s), and (4) an oath or declaration by each available joint inventor on his or her own behalf and on behalf of the non-signing joint inventor(s).

Petitioner previously satisfied Items (1), (3) and (4).

With respect to Item (2) above, Petitioner has now provided evidence through the statement of Yuval Sharon that Mr. Resheff received a complete copy of the patent application along with declaration and assignment forms to Mr. Ozeri's address. An English translation of the Israeli postal receipt was provided. This evidence is sufficient to conclude that Mr. Ozeri refuses to sign the application.

In sum, Petitioner has satisfied Items (1) - (4) above. For the reasons set forth above, the evidence submitted supports a finding that the nonsigning inventor refuses to sign the application at this time. Accordingly, it is appropriate to accord the national stage application status under 37 CFR §1.47(a) at this time.

CONCLUSION

The petition under 37 CFR §1.47(a) is **GRANTED**.

The U.S. Designated/Elected Office is authorized to accept the application as a 37 CFR 1.47(a) application using the declaration filed 16 May 2005. The application has an international filing date of 12 November 2003 under 35 U.S.C. 363, and a date of 16 May 2005 under 35 U.S.C. 371(c)(1), (c)(2) and (c)(4).

As provided in 37 CFR 1.47(a), a notice of the filing of this application will be forwarded to the non-signing inventors at their respective last known address of record. Also, a notice of the filing of this application will be published in the Official Gazette.

Cynthia M. Kratz

Cynthia M. Kratz
Attorney Advisor
PCT Legal Office
Office of PCT Legal Administration

Telephone: (571) 272-3286
Facsimile (571) 272-0459

UNITED STATES PATENT AND TRADEMARK OFFICE

UNITED STATES DEPARTMENT OF COMMERCE
United States Patent and Trademark Office
Address: COMMISSIONER FOR PATENTS
P.O. Box 1450
Alexandria, Virginia 22313-1450
www.uspto.gov

MILLEN, WHITE, ZELANO & BRANIGAN, P.C.
2200 CLARENDON BLVD.
SUITE 1400
ARLINGTON, VA 22201

Mail Date: 04/20/2010

Applicant	: Andrea Doglioni Majer	: DECISION ON REQUEST FOR
Patent Number	: 7624896	: RECALCULATION of PATENT
Issue Date	: 12/01/2009	: TERM ADJUSTMENT IN VIEW
Appliction No	: 10/535,107	: OF WYETH AND NOTICE OF INTENT TO
Filed	: 01/17/2006	: ISSUE CERTIFICATE OF CORRECTION
		:

The Request for Recalculation is **GRANTED** to the extent indicated.

The patent term adjustment has been determined to be **901** days. The USPTO will *sua sponte* issue a certificate of correction reflecting the amount of PTA days determined by the recalculation.

Prior to the issuance of the certificate of correction, the USPTO will afford patentee an opportunity to be heard and request reconsideration. Accordingly, patentee has **one month or thirty (30) days**, whichever is longer, to file a request for reconsideration of this patent term adjustment calculation. See 35 U.S.C. 154(b)(3)(B)(ii) and 37 CFR 1.322(a)(4). No extensions of time will be granted under 37 CFR 1.136.

Patentee should use document code PET.OP if electronically filing a request for reconsideration of this patent term adjustment calculation. The patentee must also include the information required by 37 CFR 1.705(b)(2) and the fee required by 37 CFR 1.18(e). If patentee does not file a timely request for reconsideration of this patent term adjustment calculation including the information required by 37 CFR 1.705(b)(2) and the fee required by 37 CFR 1.18(e), the USPTO will issue a certificate of correction reflecting the PTA determination noted above.

Patentee should be aware that in order to preserve the right to review in the United States District Court for the District of Columbia of the USPTO patent term adjustment determination, patentee must ensure that he or she also take the steps required under 35 U.S.C. 154(b)(4)(A) in a timely manner. Nothing in the request for recalculation should be construed as providing an alternative time frame for commencing a civil action under 35 U.S.C. 154(b)(4)(A).

Any questions concerning this decision should be directed to the Office of Patent Legal Administration at 571-272-7702.

09 AUG 2006

UNITED STATES PATENT AND TRADEMARK OFFICE

COMMISSIONER FOR PATENTS
UNITED STATES PATENT AND TRADEMARK OFFICE
P.O. BOX 1450
ALEXANDRIA, VA 22313-1450
www.uspto.gov

RANKIN, HILL, PORTER & CLARK, LLP
925 EUCLID AVENUE, SUITE 700
CLEVELAND, OH 44115-1405

In re Application of BRUINS et al	:	
U.S. Application No.: 10/535,108	:	
PCT Application No.: PCT/EP03/07097	:	
Int. Filing Date: 03 July 2003	:	DECISION
Priority Date Claimed: 19 November 2002	:	
Attorney Docket No.: GIL-16108	:	
For: ARTHROPOD REPELLENT COMPRISING	:	
EXTRACTS AND/OR PARTS OF THE	:	
PLANT VITEX AGNUS-CASTUS	:	

This is in response to applicant's "Petition to Withdraw Holding of Abandonment Under 37 CFR 1.8(b)" filed 24 July 2006, which is being treated under 37 CFR 1.181. No petition fee is due.

BACKGROUND

On 03 July 2003, applicant filed international application PCT/EP03/07097, which claimed priority of an earlier Germany application filed 19 November 2002. A copy of the international application was communicated to the USPTO from the International Bureau on 03 June 2004. The thirty-month period for paying the basic national fee in the United States expired on 19 May 2005.

On 16 May 2005, applicant filed national stage papers in the United States Designated/Elected Office (DO/EO/US). The submission was accompanied by, *inter alia*, the basic national fee required by 35 U.S.C. 371(c)(1).

On 30 September 2005, the DO/EO/US mailed a Notification of Missing Requirements Under 35 U.S.C. 371 (Form PCT/DO/EO/905), which indicated that an oath or declaration in compliance with 37 CFR 1.497 must be filed.

On 05 October 2005, applicant purportedly filed an executed declaration.

On 13 July 2006, the DO/EO/US mailed a Notification of Abandonment (Form PCT/DO/EO/909), which indicated that the application is abandoned for failure to timely respond to the Notification of Missing Requirements.

On 24 July 2006, applicant filed the present petition under 37 CFR 1.181.

DISCUSSION

The evidence of record is sufficient to establish that the declaration was originally filed on 05 October 2005. Specifically, the copy of the return postcard, which includes the declaration in its itemized contents and which bears a USPTO date stamp of 05 October 2005, serves as *prima facie* evidence that the declaration was received by the USPTO on 05 October 2005.

CONCLUSION

For the reasons above, the petition under 37 CFR 1.181 is GRANTED.

The Notification of Abandonment (Form PCT/DO/EO/909) mailed 13 July 2006 is hereby VACATED.

The application has an International Filing Date under 35 U.S.C. 363 of 03 July 2003, and a date under 35 U.S.C. 371(c)(1), (c)(2), and (c)(4) of 05 October 2005.

This application is being forwarded to the United States Designated/Elected Office (DO/EO/US) for further processing in accordance with this decision.

Bryan Tung
PCT Legal Examiner
PCT Legal Office

Telephone: 571-272-3303
Facsimile: 571-273-0459

UNITED STATES PATENT AND TRADEMARK OFFICE

Commissioner for Patents
United States Patent and Trademark Office
P.O. Box 1450
Alexandria, VA 22313-1450
www.uspto.gov

KENYON & KENYON LLP
ONE BROADWAY
NEW YORK NY 10004

COPY MAILED

MAR 03 2008

OFFICE OF PETITIONS

In re Application of Hammer, et al. Application No. 10/535,132 Filed: December 13, 2005 Attorney Docket No. 10191/4227	: : : : :	ON PETITION

This is a decision on the petition to revive under 37 CFR 1.137(a), filed January 30, 2008.

The petition under 37 CFR 1.137(a) is **GRANTED**.

The above-identified application was held abandoned for failure to pay the issue fee in response to the Notice of Allowance mailed July 9, 2007. This Notice set a statutory period for reply of three (3) months. No issue fee having been received, the application became abandoned on October 10, 2007. A Notice of Abandonment was mailed on November 2, 2007.

A grantable petition under 37 CFR 1.137(a) must be accompanied by: (1) the required reply, unless previously filed; (2) the petition fee as set forth in 37 CFR 1.17(l); (3) a showing to the satisfaction of the Commissioner that the entire delay in filing the required reply from the due date for the reply until the filing of a grantable petition pursuant to 37 CFR 1.137(a) was unavoidable; and (4) any terminal disclaimer (and fee as set forth in 37 CFR 1.20(d)) required pursuant to 37 CFR 1.137(d). Decisions on reviving abandoned applications on the basis of "unavoidable" delay have adopted the reasonably prudent person standard in determining if the delay was unavoidable:

> The word 'unavoidable' . . . is applicable to ordinary human affairs, and requires no more or greater care or diligence

> than is generally used and observed by prudent and careful men in relation to their most important business. It permits them in the exercise of this care to rely upon the ordinary and trustworthy agencies of mail and telegraph, worthy and reliable employees, and such other means and instrumentalities as are usually employed in such important business. If unexpectedly, or through the unforeseen fault or imperfection of these agencies and instrumentalities, there occurs a failure, it may properly be said to be unavoidable, all other conditions of promptness in its rectification being present.[1]

Moreover, a petition cannot be granted where a petitioner has failed to meet his or her burden of establishing that the delay was "unavoidable."[2]

Petitioner argues that he never received the Notice of Allowance mailed July 9, 2007. With the instant petition, petitioner has satisfied the requirements to establish non-receipt of an Office action. In particular, petitioner has submitted a copy of a docket report showing all incoming mail from the period from July 2, 2007 to August 31, 2007. In addition, petitioner has submitted a copy of a log showing all issue fees docketed for the period from July 1, 2007 to October 31, 2007. An entry for the instant application is absent in both reports, supporting the conclusion that the Notice of Allowance was not received.

In view of the above, it is concluded that petitioner has met his burden of establishing that the delay was unavoidable.

The application is being forwarded to the Office of Patent Publication for processing into a patent.

Telephone inquiries concerning this decision should be directed to the undersigned at (571)272-3207.

Cliff Congo
Petitions Attorney
Office of Petitions

---

[1] In re Mattullath, 38 App. D.C. 497, 514-15 (1912)(quoting Ex parte Pratt, 1887 Dec. Comm'r Pat. 31, 32-33 (1887)); see also Winkler v. Ladd, 221 F. Supp. 550, 552, 138 USPQ 666, 167-68 (D.D.C. 1963), aff'd, 143 USPQ 172 (D.C. Cir. 1963); Ex parte Henrich, 1913 Dec. Comm'r Pat. 139, 141 (1913).

[2] Haines v. Quigg, 673 F. Supp. 314, 316-17, 5 USPQ2d 1130, 1131-32 (N.D. Ind. 1987).

UNITED STATES PATENT AND TRADEMARK OFFICE

Commissioner for Patents
United States Patent and Trademark Office
P.O. Box 1450
Alexandria, VA 22313-1450
www.uspto.gov

COPY MAILED

MAY 16 2008

OFFICE OF PETITIONS

HARNESS, DICKEY & PIERCE, P.L.C.
P.O. BOX 8910
RESTON VA 20195

In re Application of

TSUTSUI, Takahiro et al.
Application No. 10/535,135
Filed: May 17, 2005
Attorney Docket No. **25613-000009/US**

DECISION ON PETITION
TO WITHDRAW
FROM RECORD

This is a decision on the Request to Withdraw as attorney or agent of record under 37 C.F.R. § 1.36(b), filed February 20, 2008.

The request is **NOT APPROVED**.

A grantable request to withdraw as attorney/agent of record must be signed by every attorney/agent seeking to withdraw or contain a clear indication that one attorney is signing on behalf of another/others. A request to withdraw will not be approved unless at least 30 (thirty) days would remain between the date of approval and the later of the expiration date of a time to file a response or the expiration date of the maximum time period which can be extended under 37 C.F.R. § 1.136(a).

The request cannot be approved because no reasons for withdrawal have been provided. The Office cannot, at this time, determine whether practitioner's request is one of the mandatory or permissive reasons enumerated in 37 CFR 10.40. Any subsequent requests must include reasons for withdrawal. Please note that there is a space provided for on PTO/SB/83 (Request to Withdraw as Attorney or Agent) to supply practitioner's reasons.

All future communications from the Office will continue to be directed to the above-listed address until otherwise notified by applicant.

Telephone inquiries concerning this decision should be directed to Tredelle Jackson at 571-272- 2783.

Tredelle D. Jackson
Petitions Examiner
Office of Petitions

cc: **ANTHONY M. ZUPCIC**
FITZPATRICK, CELLA, HARPER &SCINTO
30 ROCKEFELLER PLAZA
NEW YORK, NY 10112

UNITED STATES PATENT AND TRADEMARK OFFICE

Commissioner for Patents
United States Patent and Trademark Office
P.O. Box 1450
Alexandria, VA 22313-1450
www.uspto.gov

COPY MAILED

OCT 27 2008

OFFICE OF PETITIONS

HARNESS, DICKEY & PIERCE, P.L.C.
P.O. BOX 8910
RESTON, VA 20195

In re Application of
TSUTSUI, Takahiro et al.
Application No. 10535,135
Filed: May 17, 2005
Attorney Docket No. **03597.000900.**

DECISION ON PETITION TO WITHDRAW FROM RECORD

This is a decision on the Request to Withdraw as attorney or agent of record under 37 C.F.R. § 1.36(b), filed May 30, 2008.

The request is **moot** because a revocation of power of attorney has been previously filed.

A review of the file record indicates that the power of attorney to HARNESS, DICKEY & PIERCE, P.L.C. has been revoked by the assignee of the patent application on June 20, 2008. Accordingly, the request to withdraw under 37 C.F.R. § 1.36(b) is moot.

All future communications from the Office will continue to be directed to the below-listed address until otherwise notified by applicant.

Telephone inquires concerning this decision should be directed to Tredelle Jackson at 571-272-2783.

Tredelle D. Jackson
Paralegal Specialist
Office of Petitions

cc: **FITZPATRICK CELLA HARPER & SCINTO**
30 ROCKEFELLER PLAZA
NEW YORK NY 10112

UNITED STATES PATENT AND TRADEMARK OFFICE

UNITED STATES DEPARTMENT OF COMMERCE
United States Patent and Trademark Office
Address: COMMISSIONER FOR PATENTS
P.O. Box 1450
Alexandria, Virginia 22313-1450
www.uspto.gov

MCDONNELL BOEHNEN HULBERT & BERGHOFF LLP
300 S. WACKER DRIVE
32ND FLOOR
CHICAGO, IL 60606

Mail Date: 04/21/2010

Applicant	: Christelle Marie Guittet	: DECISION ON REQUEST FOR
Patent Number	: 7577280	: RECALCULATION of PATENT
Issue Date	: 08/18/2009	: TERM ADJUSTMENT IN VIEW
Appliction No	: 10/535,140	: OF WYETH AND NOTICE OF INTENT TO
Filed	: 05/17/2005	: ISSUE CERTIFICATE OF CORRECTION
		:

The Request for Recalculation is **GRANTED** to the extent indicated.

The patent term adjustment has been determined to be **937** days. The USPTO will *sua sponte* issue a certificate of correction reflecting the amount of PTA days determined by the recalculation.

Prior to the issuance of the certificate of correction, the USPTO will afford patentee an opportunity to be heard and request reconsideration. Accordingly, patentee has **one month or thirty (30) days**, whichever is longer, to file a request for reconsideration of this patent term adjustment calculation. See 35 U.S.C. 154(b)(3)(B)(ii) and 37 CFR 1.322(a)(4). No extensions of time will be granted under 37 CFR 1.136.

Patentee should use document code PET.OP if electronically filing a request for reconsideration of this patent term adjustment calculation. The patentee must also include the information required by 37 CFR 1.705(b)(2) and the fee required by 37 CFR 1.18(e). If patentee does not file a timely request for reconsideration of this patent term adjustment calculation including the information required by 37 CFR 1.705(b)(2) and the fee required by 37 CFR 1.18(e), the USPTO will issue a certificate of correction reflecting the PTA determination noted above.

Patentee should be aware that in order to preserve the right to review in the United States District Court for the District of Columbia of the USPTO patent term adjustment determination, patentee must ensure that he or she also take the steps required under 35 U.S.C. 154(b)(4)(A) in a timely manner. Nothing in the request for recalculation should be construed as providing an alternative time frame for commencing a civil action under 35 U.S.C. 154(b)(4)(A).

Any questions concerning this decision should be directed to the Office of Patent Legal Administration at 571-272-7702.

UNITED STATES PATENT AND TRADEMARK OFFICE

Commissioner for Patents
United States Patent and Trademark Office
P.O. Box 1450
Alexandria, VA 22313-1450
www.uspto.gov

YOUNG & THOMPSON
209 MADISON STREET
SUITE 500
ALEXANDRIA, VA 22314

MAILED

MAR 19 2010

OFFICE OF PETITIONS

In re Application of	:	
Bryan Barker Speight	:	
Application No. 10/535,149	:	ON PETITION
Filed: January 6, 2006	:	
Attorney Docket No. 6501-1049	:	

This is a decision on the petition under the unintentional provisions of 37 CFR 1.137(b), filed January 13, 2010, to revive the above-identified application.

The petition is **GRANTED**.

The application became abandoned for failure to timely file a reply within the meaning of 37 CFR 1.113 to the final Office action of March 12, 2009. The proposed reply required for consideration of a petition to revive must be a Notice of Appeal (and appeal fee required by 37 CFR 41.20(b)(2), an amendment that *prima facie* places the application in condition for allowance, a Request for Continued Examination and submission (37 CFR 1.114), or the filing of a continuing application under 37 CFR 1.53(b). See MPEP 711.03(c)(II)(A)(2). No extensions of time pursuant to the provisions of 37 CFR 1.136(a) were obtained. Accordingly, the date of abandonment of this application is June 13, 2009. A Notice of Abandonment was mailed September 24, 2009.

37 CFR 1.137(b)(3) requires a statement that "the entire delay in filing the required reply from the due date for the reply until the filing of a grantable petition pursuant to 37 CFR 1.137(b) was unintentional." Since the statement appearing in the petition varies from the language required by 37 CFR 1.137(b)(3), the statement is being construed as the required statement. Petitioner must notify the Office if this is **not** a correct reading of the statement appearing in the petition.

The petition satisfies the requirements of 37 CFR 1.137(b) in that petitioner has supplied (1) the reply in the form of a continuing application, (2) the petition fee of $810, and (3) an adequate statement of unintentional delay.

This application is being revived solely for purposes of continuity. As continuity has been established by this decision, the application is again abandoned in favor of continuing application number 12/686,555.

Telephone inquiries concerning this decision should be directed to Alicia Kelley at (571) 272-6059.

Chris Bottorff
Petitions Examiner
Office of Petitions

UNITED STATES PATENT AND TRADEMARK OFFICE

Commissioner for Patents
United States Patent and Trademark Office
P.O. Box 1450
Alexandria, VA 22313-1450
www.uspto.gov

2 8 SEP 2007

LEVENFELD PEARLSTEIN, LLC
2 N. Lasalle Street
Suite 1300
Chicago, IL 60602

In re Application of: CHANWA, et al.	:	
U.S. Application No.: 10/555,160 (11/718,071)	:	DECISION MERGING
PCT No.: PCT/US05/39395	:	APPLICATION FILES
International Filing Date: 26 October 2005	:	
Priority Date: 26 October 2004	:	
Attorney's Docket No.: 34451-55892	:	
For: TOOL STORAGE DEVICE	:	

This communication is in response to applicant's filing in the United States Patent Trademark Office (USPTO) of 15 June 2007.

BACKGROUND

On 26 October 2005, applicant filed in the United States Patent and Trademark Office (USPTO) papers requesting entry into the national phase of international application PCT/US05/39395, filed 26 October 2005, entitled TOOL STORAGE DEVICE. The inventors are indicated as Chanwa Nguy and Pei-Ying Lin. The attorney docket number was listed as 34451-55891.

On 29 May 2007, applicant was mailed a communication informing applicant of the need to file an executed oath or declaration of the inventor in order to proceed with national stage processing in the United States as counsel for another firm had also filed U.S. National stage papers. Applicant was afforded two months to file the document and advised that this period could be extended pursuant to 37 CFR 1.136(a).

On 15 June 2007, a declaration and power of attorney was filed appointing attorneys associated with the law firm of Levenfeld Pearlstein, LLC.

DISCUSSION

A review of applicant's filing finds that the combined declaration and power of attorney complies with 37 CFR 1.497(a)-(b)[1]. As such, the firm noted above will be used as the correspondence address for all communications relating to the U.S. National stage entry of

[1] It is noted that the citizenship of inventor Nguy is listed as "None." In accordance with MPEP 605.01, applicant's statement will be accepted as satisfying 37 CFR 1.497(a)(3).

Copied from 10555160 on 07/23/2008

PCT/US05/39395. Because the USPTO initially assigned application number 10/555,160 as the national stage application for PCT/US05/39395, the papers filed by applicant on 26 April 2007 and assigned application number 11/718,071 will be placed in application number 10/555,160. Applicant should reference application number 10/555,160 in any future communications with the USPTO regarding the U.S. National stage entry of PCT/US05/39395. Application number 11/718,071 will be made inactive.

CONCLUSION

The application has an international filing date of 26 October 2005 under 35 U.S.C. 363 and will be given a date of **15 June 2007** under 35 U.S.C. 371(c)(1), (c)(2) and (c)(4).

This application is being forwarded to the United States Designated /Elected Office (DO/EO/US) for continued processing, specifically, 1) processing of the papers and fees filed 26 April 2007 and the combined declaration and power of attorney filed 15 June 2007, 2) updating the correspondence address for the present application and 3) the preparation and mailing of a "Notification of Acceptance" (Form PCT/DO/EO/903).

Derek A. Putonen
Attorney Advisor
Office of PCT Legal Administration
Tel: (571) 272-3294
Fax: (571) 273-0459

cc:

Leon I. Edelson
Law Office of Leon I. Edelson
P.O. Box 230
Deerfield, IL 60015

10/01/2007 SBASHEIK 00000008 502035 10555160
Sale Ref: 00000010 DA#: 502035 10555160
01 FC:1631 300.00 DA
02 FC:1632 500.00 DA
03 FC:1633 200.00 DA

Copied from 10555160 on 07/23/2008

UNITED STATES PATENT AND TRADEMARK OFFICE

Commissioner for Patents
United States Patent and Trademark Office
P.O. Box 1450
Alexandria, VA 22313-1450
www.uspto.gov

ROSETTA-GENOMICS
c/o POLSINELLI SHUGHART PC
700 W. 47TH STREET
SUITE 1000
KANSAS CITY MO 64112

MAILED

SEP 24 2009

OFFICE OF PETITIONS

In re Application of
Itzhak Bentwich
Application No. 10/535,164
Filed: July 24, 2006
Attorney Docket Number:
050992.0200.13USPC

: DECISION ON PETITION
: UNDER 37 CFR 1.78(a)(3)

This is a decision on the petition under 37 CFR 1.78(a)(3) filed June 10, 2009, to accept an unintentionally delayed claim under 35 U.S.C. §120 for the benefit of prior-filed non-provisional applications 10/605,923 and 10/605,924.

The petition is **DISMISSED**.

A petition for acceptance of a claim for late priority under 37 CFR 1.78(a)(3) is only applicable to those applications filed on or after November 29, 2000. Further, the petition is appropriate only after the expiration of the period specified in 37 CFR 1.78(a)(2)(ii). In addition, the petition under 37 CFR 1.78(a)(3) must be accompanied by:

(1) the reference required by 35 U.S.C. § 120 and 37 CFR 1.78(a)(2)(i) of the prior-filed application, unless previously submitted;
(2) the surcharge set forth in § 1.17(t); and
(3) a statement that the entire delay between the date the claim was due under 37 CFR 1.78(a)(2)(ii) and the date the claim was filed was unintentional. The Commissioner may require additional information where there is a question whether the delay was unintentional.

Where an application claims a benefit under 35 U.S.C. 120 of a chain of applications, the application must make a reference to the first (earliest) application and every intermediate application. See Sampson v. Ampex Corp., 463 F.2d 1042, 1044-45, 174 USPQ 417, 418-19 (2d Cir. 1972); Sticker Indus. Supply Corp. v. Blaw-Knox Co., 405 F.2d 90, 93, 160 USPQ 177, 179 (7th Cir. 1968); Hovlid v. Asari, 305 F.2d 747, 751, 134 USPQ 162, 165 (9th Cir. 1962). See also MPEP 201.11. In addition, every intermediate application must also make a reference to the first (earliest) application and every application after the first application and before such intermediate application. MPEP 201.06(d).

Upon reviewing the records of the USPTO, it appears that the chain of applications to which petitioners wish to claim the benefit of priority includes applications 10/649,653 and 10/651,227 neither of which has ever been accorded a filing date and both of which were abandoned during pre-examination.

Application No. 10/649,653 is claimed as a continuation of 10/605,923 and Application No. 10/651,227 is claimed as a continuation of 10/605,924.

Before the petition under 37 CFR 1.78(a)(3) can be granted in the present application, petitioner must file a renewed petition under 37 CFR 1.78(a)(3) accompanied by either a Supplemental Application Data Sheet (signed in compliance with 37 CFR 1.33(b) and in compliance with 37 CFR 1.76) or a substitute amendment (complying with the provisions of 37 CFR 1.121) removing application nos. 10/649,653 and 10/651,227 from the chain.

Also, 37 CFR § 1.78(a)(3) requires a statement that the entire delay between the date the claim was due under 37 CFR § 1.78(a)(2)(ii) and the date the claim was filed was unintentional. Since the statement appearing in the petition varies from the required language, the statement is being construed as the statement required by 37 CFR §1.78(a)(3). If this is not a correct reading of the statement appearing in the petition, petitioner should promptly notify the Office.

Further correspondence with respect to this matter should be addressed as follows:

By mail: Mail Stop PETITIONS
Commissioner for Patents
Post Office Box 1450
Alexandria, VA 22313-1450

By hand: Customer Service Window
Mail Stop Petitions
Randolph Building
40I Dulany Street
Alexandria, VA 22314

By fax: (571) 273-8300
ATTN: Office of Petitions

Any inquiries concerning this decision may be directed to Senior Petitions Attorney Patricia Faison-Ball at (571) 272-3212.

Anthony Knight
Supervisor
Office of Petitions

09 JUN 2006

#7

UNITED STATES PATENT AND TRADEMARK OFFICE

Commissioner for Patents
United States Patent and Trademark Office
P.O. Box 1450
Alexandria, VA 22313-1450
www.uspto.gov

SUGHRUE MION, PLLC
2100 Pennsylvania Ave, NW
Suite 800
Washington, DC 20037

In re Application of	:	
BEGUINOT, Jean, et al.	:	
U.S. Application No.: 10/535,174	:	DECISION ON PETITION
PCT No.: PCT/FR2003/003360	:	(37 CFR 1.181)
International Filing Date: 13 November 2003	:	
Priority Date: 19 November 2002	:	
Attorney's Docket No.: Q87983	:	
For: WELDABLE COMPONENT OF STRUCTURAL STEEL AND METHOD OF MANUFACTURE	:	

This decision is issued in response to the "Petition Requesting Restart of Action or Acceptance of Filing as Timely; and/or Refund Under Rule 26" filed on 17 March 2006. No petition fee is required.

BACKGROUND

On 13 November 2003, applicants filed international application PCT/FR2003/003360. The application claimed a priority date of 19 November 2002 and designated the United States. On 10 June 2004, a copy of the international application was transmitted to the United States Patent And Trademark Office ("USPTO") by the International Bureau ("IB"). The deadline for payment of the basic national fee was 30 months from the priority date, i.e., 19 May 2005.

On 17 May 2005, applicants filed a transmittal letter for entry into the national stage in the United States which was accompanied by, among other materials, payment of the basic national fee and a translation of the international application into English.

On 20 October 2005, the United States Designated/Elected Office (DO/EO/US) mailed a Notification Of Missing Requirements (Form PCT/DO/EO/905) indicating that an oath or declaration in compliance with 37 CFR 1.497 and the surcharge for filing the oath or declaration later than thirty months after the priority date was required.

On 17 March 2006, applicants filed the petition considered herein. The petition asserts that applicants never received the Notification Of Missing Requirements mailed 20 October 2005, only learning of such Notification by a review of the USPTO's PAIR site. Applicants have included with the present petition a response to the Notification of Missing Requirements (i.e., an executed declaration and the required surcharge payment) and the fee for the three-

month extension of time required for the 17 March 2006 submission to be considered a timely response to the Notification. The petition argues that, based on applicants' failure to receive the mailed Notification, re-mailing of the Notification of Missing Requirements is appropriate. Applicants therefore assert that the three-month extension fee is unnecessary and that a refund of the extension fee is apporopriate.

DISCUSSION

Section 711.03(c)(II) of the MPEP sets forth the requirements for a grantable petition to confirm the failure to receive an Office communication:

> The showing required to establish nonreceipt of an Office communication must include a statement from the practitioner stating that the Office communication was not received by the practitioner and attesting to the fact that a search of the file jacket and docket records indicates that the Office communication was not received. A copy of the docket record where the nonreceived Office communication would have been entered had it been received and docketed must be attached to and referenced in practitioner's statement.

Here, the petition does not contain the required statement from the practitioner that "a search of the file jacket and docket records in our office indicates that the Office communication was not received." As for the docket records requirement, petitioner has attached a copy of the firm's mail log listing Office communications received from 20 October 2005 to 27 October 2005. However, this mail log is not sufficient to satisfy the docket records requirement. Rather, petitioner must provide a copy of the firm's office docket for the date on which a response to the Notification Of Missing Requirements would have been due, had the Notification been received (i.e., 20 December 2005).

Based on the above, applicants have failed to satisfy all the requirements for a grantable petition to confirm that the Notification Of Missing Requirements mailed 20 October 2005 was not received. A refund of the extension fee necessary for the 17 March 2006 submission to be considered a timely response to the Notification Of Missing Requirements would therefore be inappropriate.

It is noted that the declaration and surcharge payment filed with the present petition are a proper response to the Notification Of Missing Requirements.

CONCLUSION

Applicants have failed to adequately demonstrate that the Notification Of Missing Requirements mailed 20 October 2005 was not received. The three-month extension fee paid by applicants is therefore necessary for the 17 March 2006 to be considered a timely response to the

Notification Of Missing Requirements (and thereby avoid abandonment of the application). The petition for a refund of this extension fee is therefore **DISMISSED** without prejudice.

Any reconsideration on the merits of this petition must be filed within **TWO (2) MONTHS** from the mail date of this decision. Any such request must include the remaining requirements for a grantable petition demonstrating the failure to receive the Notification of Missing Requirements mailed 20 October 2005 (i.e., the required practitioner's statement and additional docket materials discussed above).

Please direct further correspondence with respect to this issue to Mail Stop PCT, Commissioner for Patents, P.O. Box 1450, Alexandria, Virginia 22313-1450, with the contents of the letter marked to the attention of the Office of PCT Legal Administration.

The application is being forwarded to the National Stage Processing Branch of the Office of PCT Operations for further processing in accordance with this decision. The date under 35 U.S.C. 371(c)(1), (c)(2), and (c)(4) is 17 March 2006.

Richard M. Ross
Attorney Advisor
Office Of PCT Legal Administration
Telephone: (571) 272-3296
Facsimile: (571) 273-0459

UNITED STATES PATENT AND TRADEMARK OFFICE

#9

Commissioner for Patents
United States Patent and Trademark Office
P.O. Box 1450
Alexandria, VA 22313-1450
www.uspto.gov

06 OCT 2006

SUGHRUE MION, PLLC
2100 Pennsylvania Ave, NW
Suite 800
Washington, D.C. 20037

In re Application of:	:	
BEGUINOT, Jean, et al.	:	DECISION ON RENEWED PETITION
U.S. Application No.: 10/535,174	:	
PCT No.: PCT/FR2003/003360	:	
International Filing Date: 13 November 2003	:	
Priority Date: 19 November 2002	:	
Atty Docket No.: Q87983	:	
For: WELDABLE COMPONENT OF STRUCTURAL STEEL AND METHOD OF MANUFACTURE	:	

In a decision mailed on 09 June 2006, this Office dismissed without prejudice applicants' petition seeking a refund of the three-month extension fee paid by applicants on 17 March 2006. The petition argued that applicants did not receive the Notification Of Missing Requirements mailed on 20 October 2005 and that applicants should therefore not be required to pay the extension fee required to make their subsequent 17 March 2006 submission a timely response to the Notification Of Missing Requirements. The petition was dismissed for failure to satisfy the requirements of a grantable petition. Specifically, applicants had not provided the statements and docket records required to confirm that applicant did not receive the Notification Of Missing Requirements.

On 09 August 2006, applicants filed the renewed petition considered herein. The renewed petition includes the required statement from the practitioner that a search of the file jacket and the docket records indicates that the Notification Of Missing Requirements was not received. The submission also includes the required docket records. Applicants have now satisfied all the requirements for a grantable petition.

Applicants' petition to confirm that the Notification Of Missing Requirements (Form PCT/DO/EO/905) mailed 20 October 2005 was not received is **GRANTED**.

Because applicants did not receive the Notification of Missing Requirements mailed 20 October 2005, it is not necessary for applicants to submit an extension fee in order for their subsequent submission of a declaration and surcharge to be considered timely filed. Accordingly, the previously charge three-month extension fee will be refunded to Deposit Account No. 19-4880, as requested.

The application is being forwarded to the National Stage Processing Branch of the Office Of PCT Operations for further processing in accordance with this decision. As noted in the previous decision, the date under 35 U.S.C. 371(c)(1), (c)(2), and (c)(4) is 17 March 2006.

Richard M. Ross
Attorney Advisor
Office of PCT Legal Administration
Telephone: (571) 272-3296
Facsimile: (571) 273-0459

UNITED STATES PATENT AND TRADEMARK OFFICE

Commissioner for Patents
United States Patent and Trademark Office
P.O. Box 1450
Alexandria, VA 22313-1450
www.uspto.gov

MORRISON & FOERSTER LLP
1650 TYSONS BOULEVARD
SUITE 400
MCLEAN VA 22102

COPY MAILED

OCT 2 2 2007

OFFICE OF PETITIONS

In re Application of	:	
Jochen Grimminger, et al.	:	
Application No. 10/535,200	:	DECISION ON PETITION
Filed: May 17, 2005	:	TO WITHDRAW
Attorney Docket No. 449122081900	:	FROM RECORD
	:	

This is a decision on the Request to Withdraw as attorney or agent of record under 37 C.F.R. § 1.36(b) filed May 25, 2007.

The request is **DISMISSED** as moot.

A review of the file record indicates that the power of attorney to Morrison & Foerster, LLP has been revoked by the assignee of the patent application on August 7, 2007. Accordingly, the request to withdraw under 37 C.F.R. § 1.36(b) is moot.

All future communications from the Office will continue to be directed to the below-listed address until otherwise notified by applicant.

Telephone inquires concerning this decision should be directed to undersigned at 571-272-1642.

April M. Wise
Petitions Examiner
Office of Petitions

cc: KEVIN R. SPIVAK
BELL, BOYD & LLOYD, LLC
70 WEST MADISON STREET
SUITE 3100
CHICAGO, IL 60602-4207

UNITED STATES PATENT AND TRADEMARK OFFICE

0 6 NOV 2009

Commissioner for Patents
United States Patent and Trademark Office
P.O. Box 1450
Alexandria, VA 22313-1450
www.uspto.gov

75304
CAPITAL CITY TECHLAW, PLLC
P.O. Box 1210
Vienna, VA 22183

In re Application of
SVENSSON *et al*
U.S. Application No.: 10/535,215
PCT No.: PCT/SE2003/001493
Int. Filing Date: 25 September 2003
Priority Date: 18 November 2002
Docket No.: 150-272
For: FUNCTIONAL CEILING SYSTEM

DECISION ON PETITION UNDER 37 CFR 1.137(b)

Applicants' petition to revive under 37 CFR 1.137(b) filed on 11 September 2009 is hereby **GRANTED** as follows:

A petition to revive pursuant to 37 CFR 1.137(b) requires: (1) a proper reply, (2) the petition fee required by law, (3) a statement that the "entire delay in filing the required reply from the due date for the reply to the filing of a grantable petition pursuant to this paragraph was unintentional," and (4) any terminal disclaimer and fee required pursuant to 37 CFR 1.137(c).

A declaration in compliance with 37 CFR 1.497(a) and (b) and a $130.00 surcharge fee was provided. This is an appropriate response to the Form PCT/DO/EO/905 mailed 12 January 2006. The $1,620 petition fee has been paid. A terminal disclaimer is not required.

Items (1), (2) and (4) of 37 CFR 1.137(b) are satisfied.

With respect to item (3) of 37 CFR 1.137(b), the present petition includes a statement that "the entire delay in filing the required reply from the due date for the required reply until the filing of this Petition was unintentional." Applicants also included declarations by Mr. Steven S. Payne and Mr. Herman R. Heflin III explaining the circumstances of the delay.

It is noted that the present application has been abandoned for an extended period of time. The USPTO is relying on petitioners' duty of candor and good faith in accepting the statement that the entire delay in filing the required reply from the due date for the reply until the filing of a grantable petition pursuant to 37 CFR 1.137(b) was unintentional. See Changes to Patent Practice Procedure, 62 Fed. Reg. at 53160 and 53178, 1203 Off. Gaz. Pat. Office at 88 and 103 (responses to comments 64 and 109)(applicant obligated under 37 CFR 10.18 to inquire into the underlying facts and

circumstances when providing a statement required by 37 CFR 1.137(b) to the Patent and Trademark Office).

Based on this reliance, the statement in the petition and the declarations by Mr. Steven S. Payne and Mr. Herman R. Heflin III are accepted as meeting the requirements of 37 CFR 1.137(b)(3).

Accordingly, all requirements under 37 CFR 1.137(b) have been satisfied.

Applicants have completed the requirements for acceptance under 35 U.S.C. 371(c). The application has an international filing date of 09 August 2005, under 35 U.S.C. 363 and a 35 U.S.C. 371(c)(1), (c)(2) and (c)(4) date of 11 September 2009.

This application is being forwarded to the National Stage Processing Division of the Office of PCT Operations for continued processing.

James Thomson

James Thomson
Attorney Advisor
Office of PCT Legal Administration

Tel.: (571) 272-3302

UNITED STATES PATENT AND TRADEMARK OFFICE

Commissioner for Patents
United States Patent and Trademark Office
P.O. Box 1450
Alexandria, VA 22313-1450
www.uspto.gov

COOPER & DUNHAM, LLP
1185 AVENUE OF THE AMERICAS
NEW YORK, NY 10036

COPY MAILED
MAR 27 2007
OFFICE OF PETITIONS

In re Patent of Kim et al.	:	
Patent No. 7,100,674	:	
Issue Date: September 5, 2006	:	Decision on Petition
Application No. 10/535,216	:	
Filing Date: May 17, 2005	:	
Attorney Docket No. 744440/RSM	:	

This is a decision in response to the paper filed November 6, 2006, which is being treated as a request under 37 CFR 3.81 to accept the correction of the assignee data on the front page of the above-identified patent.

The request under 37 CFR 3.81 is **GRANTED**.

37 CFR 3.81(b) reads:

> Any request for issuance of an application in the name of the assignee submitted after the date of payment of the issue fee, and any request for a patent to be corrected to state the name of the assignee, must state that the assignment was submitted for recordation as set forth in § 3.11 before issuance of the patent, and must include a request for a certificate of correction under § 1.323 of this chapter (accompanied by the fee set forth in § 1.20(a)) and the processing fee set forth in § 1.17(i) of this chapter.

In other words, the request under 37 CFR 3.81(b) will be granted when:

(1) a request under 37 CFR 3.81 and the fee set forth in 37 CFR 1.17(i) are filed,
(2) the assignment was submitted for recordation prior to issuance of the patent, and
(3) a request for a certificate of correction and the fee set forth in 37 CFR 1.20(a) are submitted.

Patentees have met the requirements set forth above. Therefore, the request is granted.

The Certificates of Correction Branch will issue the requested certificate of correction in due course.

Telephone inquiries regarding this communication should be directed to Petitions Attorney Steven Brantley at (571) 272-3203.

Charles Steven Brantley
Senior Petitions Attorney
Office of Petitions

UNITED STATES PATENT AND TRADEMARK OFFICE

Commissioner for Patents
United States Patent and Trademark Office
P.O. Box 1450
Alexandria, VA 22313-1450
www.uspto.gov

MAILED

SEP 23 2009

OFFICE OF PETITIONS

FOLEY AND LARDNER LLP
SUITE 500
3000 K STREET NW
WASHINGTON DC 20007

In re Patent No. 7,541,153	:	DECISION ON REQUEST FOR
Fukui et al.	:	RECONSIDERATION OF
Issue Date: June 2, 2009	:	PATENT TERM ADJUSTMENT
Application No. 10/535,223	:	AND NOTICE OF INTENT TO ISSUE
Filed: March 27, 2006	:	CERTIFICATE OF CORRECTION
Docket No.024918-0123	:	

This is in response to the REQUEST FOR RECONSIDERATION OF PATENT TERM ADJUSTMENT UNDER 37 C.F.R. § 1.705, filed July 29, 2009, which is properly treated under 37 CFR 1.705(d). Patentees request that the determination of patent term adjustment for the above-identified patent be corrected from three hundred twenty-five (325) days to six hundred ninety-seven (697) days.

Preliminarily, patentees request that the Office defer or delay a decision on this request for reconsideration until a final decision has been rendered in Wyeth v. Dudas, 580 F.Supp.2d 138, 88 U.S.P.Q.2d 1538 (D.D.C. 2008), which is now on appeal at the U.S. Court of Appeals for the Federal Circuit, under Federal Circuit Docket No. 2009-1120. However, the Office notes that there is no specific regulatory provision for requesting that a petition under 37 CFR 1.705(d) be held in abeyance.

The request for reconsideration of the patent term adjustment indicated in the patent is **GRANTED** to the extent indicated herein.

Patentees are given **THIRTY (30) DAYS or ONE (1) MONTH, whichever is longer**, from the mail date of this decision to respond. No extensions of time will be granted under 37 CFR 1.136.

The patent term adjustment indicated on the patent is to be corrected by issuance of a certificate of correction showing a revised Patent Term Adjustment of **371 days**.

On June 2, 2009, the above-identified application matured into U.S. Patent No. 7,541,153. The patent issued with a revised patent term adjustment of 325 days. The present request for reconsideration of patent term adjustment was timely filed on July 29, 2009, within two months of the issue date of the patent. See 37 CFR 1.705(d).

Patentees request recalculation of the patent term adjustment based on the decision in Wyeth v. Dudas, 580 F. Supp. 2d 138, 88 U.S.P.Q. 2d 1538 (D.D.C. 2008). Patentees aver that the correct number of days of Patent Term Adjustment is 697 days under the court's interpretation of the overlap provision as set forth in Wyeth v. Dudas, 580 F. Supp. 2d 138, 88 U.S.P.Q. 2d 1538 (D.D.C. 2008). Patentees assert that pursuant to Wyeth, a PTO delay under 35 U.S.C. 154(b)(1)(A) overlaps with a delay under 35 U.S.C. 154(b)(1)(B) only if the delays "occur on the same day." Patentees maintain that the total non-overlapping PTO delay under 35 U.S.C. 154(b)(1)(A) (326 days) and 35 U.S.C. 154(b)(1)(B) (372 days) is 698 days as these periods do not occur on the same day. Further, given the applicant delay of 1 day, patentees assert entitlement to 697 (698- 1) days of patent term adjustment.

At the outset, the Office concurs with patentees that the period of delay under 37 CFR 1.702(b) is 372 days. A review of the record indicates that the Office did not use the 35 U.S.C. 371(b) national stage commencement date of Thursday, May 26, 2005, in calculating the period of adjustment under 37 CFR 1.703(b). As stated in 37 CFR 1.703(b), the period of adjustment under § 1.702(b) is the number of days in the period beginning on the day after the date that is three years after the date on which the application was filed under 35 U.S.C. 111(a) or the national stage commenced under 35 U.S.C. 371(b) or (f) in an international application and ending on the date a patent was issued.

Pursuant to 37 CFR 1.703(b), the period of adjustment under 37 CFR 1.702(b)[1] should be 372 days, counting the number of days beginning

[1] Pursuant to 35 U.S.C. 154(b)(1)(B), 37 CFR 1.702(b) provides, in pertinent part, that:

on the day after the date that is three years after the date on which the national stage commenced under 35 U.S.C. 371(b), May 27, 2008, and ending on the date the patent issued, June 2, 2009.

As to patentees' interpretation of the period of overlap, the Office finds it inconsistent with the Office's interpretation of the overlap provision, 35 U.S.C. 154(b)(2)(A). 35 U.S.C. 154(b)(2)(A) limits the adjustment of patent term, as follows:

> to the extent that the periods of delay attributable to grounds specified in paragraph (1) overlap, the period of any adjustment granted under this subsection shall not exceed the actual number of days the issuance of the patent was delayed.

As explained in *Explanation of 37 CFR 1.703(f)*[2] *and of the United States Patent and Trademark Office Interpretation of 35 U.S.C. 154(b)(2)(A)*, 69 Fed. Reg. 34283 (June 21, 2004), the Office interprets 35 U.S.C. 154(b)(2)(A) as permitting either patent term adjustment under 35 U.S.C. 154(b)(1)(A)(i)-(iv), or patent term adjustment under 35 U.S.C. 154(b)(1)(B), but not as permitting patent term adjustment under both 35 U.S.C. 154(b)(1)(A)(i)-(iv) and 154(b)(1)(B). Accordingly, the Office implements the overlap provision as follows:

> If an application is entitled to an adjustment under 35 U.S.C. 154(b)(1)(B), the entire period during which the application was pending (except for periods excluded under 35 U.S.C. 154(b)(1)(B)(i)-(iii)), and not just the period beginning three years after the actual filing date of the application, is the period of delay under 35 U.S.C. 154(b)(1)(B) in determining whether periods of delay overlap

---

Failure to issue a patent within three years of the actual filing date of the application. Subject to the provisions of 35 U.S.C. 154(b) and this subpart, the term of an original patent shall be adjusted if the issuance of the patent was delayed due to the failure of the Office to issue a patent within three years after the date on which the application was filed under 35 U.S.C. 111(a) or the national stage commenced under 35 U.S.C. 371(b) or (f) in an international application[.]

[2] Likewise, 37 CFR 1.703(f) provides that:

> To the extent that periods of delay attributable to the grounds specified in § 1.702 overlap, the period of adjustment granted under this section shall not exceed the actual number of days the issuance of the patent was delayed.

> under 35 U.S.C. 154(b)(2)(A). Thus, any days of delay for Office issuance of the patent more than 3 years after the filing date of the application, which overlap with the days of patent term adjustment accorded prior to the issuance of the patent will not result in any additional patent term adjustment. See 35 U.S.C. 154(b)(1)(B), 35 U.S.C. 154(b)(2)(A), and 37 CFR § 1.703(f). See *Changes to Implement Patent Term Adjustment Under Twenty Year Term; Final Rule*, 65 Fed. Reg. 56366 (Sept. 18, 2000). See also *Revision of Patent Term Extension and Patent Term Adjustment Provisions; Final Rule*, 69 Fed. Reg. 21704 (April 22, 2004), 1282 Off. Gaz. Pat. Office 100 (May 18, 2004). See also *Explanation of 37 CFR 1.703(f) and of the United States Patent and Trademark Office Interpretation of 35 U.S.C. 154(b)(2)(A)*, 69 Fed. Reg. 34283 (June 21, 2004).

Further, as stated in the *Explanation of 37 CFR 1.703(f) and of the United States Patent and Trademark Office Interpretation of 35 U.S.C. 154(b)(2)(A)*, the Office has consistently taken the position that if an application is entitled to an adjustment under the three-year pendency provision of 35 U.S.C. 154(b)(1)(B), the entire period during which the application was pending before the Office (except for periods excluded under 35 U.S.C. 154(b)(1)(B)(i)-(iii)), and not just the period beginning three years after the actual filing date of the application, is the relevant period under 35 U.S.C. 154(b)(1)(B) in determining whether periods of delay "overlap" under 35 U.S.C. 154(b)(2)(A).

This interpretation is consistent with the statute. Taken together the statute and rule provide that to the extent that periods of delay attributable to grounds specified in 35 U.S.C. 154(b)(1) and in corresponding 37 CFR 1.702 overlap, the period of adjustment granted shall not exceed the actual number of days the issuance of the patent was delayed.

In this instance, the relevant period under 35 U.S.C. 154(b)(1)(B) in determining whether periods of delay "overlap" under 35 U.S.C. 154(b)(2)(A) is the period during which the application was pending before the Office, May 26, 2005 to June 2, 2009 (not including any other periods excluded under 35 U.S.C. 154(b)(1)(B)(i)-(iii)).

Pursuant to 35 U.S.C. 154(b)(1)(A) and 37 CFR 1.702(a)(1)[3], 326 days of patent term adjustment were accorded during the pendency of the application for Office delay prior to the issuance of the patent. Pursuant to 35 U.S.C. 154(b)(1)(B) and 37 CFR 1.702(b)[4], 372 days of patent term adjustment accrued for Office issuance of the patent more than three years after the date the national stage commenced under 35 U.S.C. 371(b).

The 372 days of patent term adjustment under 37 CFR 1.702(b) overlap with the 326 days of patent term adjustment under 37 CFR 1.702(a)(1). Entry of both the 372 days and the 326 days is neither permitted nor warranted. 372 days is the actual number of days issuance of the patent was delayed. Accordingly, the additional period of adjustment of 46 days will be entered by the Office for failing to issue the patent within three years.

In view thereof, the patent term adjustment indicated on the patent should be 371 days.

The Office acknowledges the submission of the $200.00 fee set forth in 37 CFR 1.18(e). No additional fees are required.

The application file is being forwarded to the Certificates of Correction Branch for issuance of a certificate of correction in order to rectify this error. The Office will issue a certificate of correction indicating that the term of the above-identified patent is extended or adjusted by 371 days.

Telephone inquiries regarding this matter should be directed to Kenya A. McLaughlin, Petitions Attorney, at (571) 272-3222.

Christina Tartera Donnell

Christina Tartera Donnell
Senior Petitions Attorney
Office of Petitions

Enclosure: Copy of DRAFT Certificate of Correction

---

[3] A restriction requirement was mailed on April 17, 2008, fourteen months and 326 days after the date of completion of all 35 U.S.C. 371 requirements on March 27, 2006.

[4] As of the date the patent issued on June 2, 2009, the application was pending three years and 372 days.

DRAFT COPY

UNITED STATES PATENT AND TRADEMARK OFFICE

CERTIFICATE OF CORRECTION

PATENT : 7,541,153 B2

DATED : Jun. 2, 2009

INVENTOR(S) : Fukui, et al.

It is certified that error appears in the above-identified patent and that said Letters Patent is hereby corrected as shown below:

On the cover page,

[*] Notice: Subject to any disclaimer, the term of this patent is extended or adjusted under 35 USC 154(b) by (325) days

Delete the phrase "by 325 days" and insert – by 371 days--

UNITED STATES PATENT AND TRADEMARK OFFICE

Commissioner for Patents
United States Patent and Trademark Office
P.O. Box 1450
Alexandria, VA 22313-1450
www.uspto.gov

MAILED

MAR 17 2010

OFFICE OF PETITIONS

FOLEY AND LARDNER LLP
SUITE 500
3000 K STREET NW
WASHINGTON DC 20007

In re Patent No. 7, 541,153	: DECISION ON REQUEST
Fukui, et al.	: FOR
Issue Date: June 2, 2009	: RECONSIDERATION OF
Application No. 10/535,223	: PATENT TERM ADJUSTMENT
Filed: March 27, 2006	: and
Atty Docket No.024918-0123	: NOTICE OF INTENT TO ISSUE
	: CERTIFICATE OF CORRECTION

This is a decision on the petition filed on October 21, 2009, which is being treated as a petition under 37 CFR 1.705(d) requesting that the patent term adjustment indicated on the above-identified patent be corrected to indicate that the term of the above-identified patent is extended or adjusted by six hundred ninety-seven (697) days.

The petition to correct the patent term adjustment indicated on the above-identified patent to indicate that the term of the above-identified patent is extended or adjusted by six hundred ninety-seven (697) days is **GRANTED**.

The application is being forwarded to the Certificates of Corrections Branch for issuance of a certificate of correction. The Office will issue a certificate of correction indicating that the term of the above-identified patent is extended or adjusted by six hundred ninety-seven (697) days.

Telephone inquiries specific to this matter should be directed to Kenya A. McLaughlin, Petitions Attorney, at (571) 272-3222.

Christina Tartera Donnell

Christina Tartera Donnell
Senior Petitions Attorney
Office of Petitions

Enclosure: Copy of DRAFT Certificate of Correction

DRAFT COPY

UNITED STATES PATENT AND TRADEMARK OFFICE

CERTIFICATE OF CORRECTION

PATENT : 7,541,153 B2

DATED : Jun. 2, 2009

INVENTOR(S) : Fukui, et al.

It is certified that error appears in the above-identified patent and that said Letters Patent is hereby corrected as shown below:

On the cover page,

[*] Notice: Subject to any disclaimer, the term of this patent is extended or adjusted under 35 USC 154(b) by (325) days

Delete the phrase "by 325 days" and insert – by 697 days--

UNITED STATES PATENT AND TRADEMARK OFFICE

UNITED STATES DEPARTMENT OF COMMERCE
United States Patent and Trademark Office
Address: COMMISSIONER FOR PATENTS
P.O. Box 1450
Alexandria, Virginia 22313-1450
www.uspto.gov

APPLICATION NO.	FILING DATE	FIRST NAMED INVENTOR	ATTORNEY DOCKET NO.	CONFIRMATION NO.
10/535,224	01/17/2006	Masanobu Tanaka	075834.00445	5741

7590 01/11/2008

ROBERT J. DEPKE
LEWIS T. STEADMAN
ROCKEY, DEPKE & LYONS, LLC
SUITE 5450 SEARS TOWER
CHICAGO, IL 60606-6306

EXAMINER
STULTZ, JESSICA T

ART UNIT	PAPER NUMBER
2873	

MAIL DATE	DELIVERY MODE
01/11/2008	PAPER

DECISION GRANTING PETITION UNDER 37 CFR 1.138(d)

The declaration of express abandonment is recognized

This is in response to the petition under 37 CFR 1.138(d), requesting for a refund of any previously paid search fee and excess claims fee in the above-identified application.

The petition is granted.

The express abandonment is recognized. Any previously paid search fee and excess claims fee are hereby refunded.

Telephone inquiries should be directed to the Office of Data Management at (571) 272-4200.

Richards Clemons
Patent Publication Branch
Office of Data Management

Adjustment date: 01/10/2008 RCLEMONS
01/19/2006 GFREY1 00000069 10535224
01 FC:1617 -130.00 OP

05 FC:1614 -1000.00 OP

Adjustment date: 01/10/2008 RCLEMONS
05/20/2005 GFREY1 00000104 10535224
01 FC:1631 -300.00 OP

02 FC:1633 -200.00 OP

FORM PET651G (Rev. 08/07)

UNITED STATES PATENT AND TRADEMARK OFFICE

UNITED STATES DEPARTMENT OF COMMERCE
United States Patent and Trademark Office
Address: COMMISSIONER FOR PATENTS
P.O. Box 1450
Alexandria, Virginia 22313-1450
www.uspto.gov

APPLICATION NO.	FILING DATE	FIRST NAMED INVENTOR	ATTORNEY DOCKET NO.	CONFIRMATION NO.
10/535,224	01/17/2006	Masanobu Tanaka	075834.00445	5741

33448 7590 01/10/2008
ROBERT J. DEPKE
LEWIS T. STEADMAN
ROCKEY, DEPKE & LYONS, LLC
SUITE 5450 SEARS TOWER
CHICAGO, IL 60606-6306

EXAMINER
STULTZ, JESSICA T

ART UNIT	PAPER NUMBER
2873	

MAIL DATE	DELIVERY MODE
01/10/2008	PAPER

Please find below and/or attached an Office communication concerning this application or proceeding.

The time period for reply, if any, is set in the attached communication.

Notice of Abandonment	Application No.	Applicant(s)	
	10/535,224	TANAKA, MASANOBU	
	Examiner	Art Unit	
	Stultz, Jessica	2873	

-- The MAILING DATE of this communication appears on the cover sheet with the correspondence address--

This application is abandoned in view of:

1. ☐ Applicant's failure to timely file a proper reply to the Office letter mailed on _____.
   (a) ☐ A reply was received on _____ (with a Certificate of Mailing or Transmission dated _____), which is after the expiration of the period for reply (including a total extension of time of _____ month(s)) which expired on _____.
   (b) ☐ A proposed reply was received on _____, but it does not constitute a proper reply under 37 CFR 1.113 (a) to the final rejection.
   (A proper reply under 37 CFR 1.113 to a final rejection consists only of: (1) a timely filed amendment which places the application in condition for allowance; (2) a timely filed Notice of Appeal (with appeal fee); or (3) a timely filed Request for Continued Examination (RCE) in compliance with 37 CFR 1.114).
   (c) ☐ A reply was received on _____ but it does not constitute a proper reply, or a bona fide attempt at a proper reply, to the non-final rejection. See 37 CFR 1.85(a) and 1.111. (See explanation in box 7 below).
   (d) ☐ No reply has been received.

2. ☐ Applicant's failure to timely pay the required issue fee and publication fee, if applicable, within the statutory period of three months from the mailing date of the Notice of Allowance (PTOL-85).
   (a) ☐ The issue fee and publication fee, if applicable, was received on _____ (with a Certificate of Mailing or Transmission dated _____), which is after the expiration of the statutory period for payment of the issue fee (and publication fee) set in the Notice of Allowance (PTOL-85).
   (b) ☐ The submitted fee of $_____ is insufficient. A balance of $_____ is due.
   The issue fee required by 37 CFR 1.18 is $_____. The publication fee, if required by 37 CFR 1.18(d), is $_____.
   (c) ☐ The issue fee and publication fee, if applicable, has not been received.

3. ☐ Applicant's failure to timely file corrected drawings as required by, and within the three-month period set in, the Notice of Allowability (PTO-37).
   (a) ☐ Proposed corrected drawings were received on _____ (with a Certificate of Mailing or Transmission dated _____), which is after the expiration of the period for reply.
   (b) ☐ No corrected drawings have been received.

4. ☑ The letter of express abandonment which is signed by the attorney or agent of record, the assignee of the entire interest, or all of the applicants.

5. ☐ The letter of express abandonment which is signed by an attorney or agent (acting in a representative capacity under 37 CFR 1.34(a)) upon the filing of a continuing application.

6. ☐ The decision by the Board of Patent Appeals and Interference rendered on _____ and because the period for seeking court review of the decision has expired and there are no allowed claims.

7. ☐ The reason(s) below:

Rick Clemons ☐☐Administrative Assistant☐☐Art Unit: 3900

Petitions to revive under 37 CFR 1.137(a) or (b), or requests to withdraw the holding of abandonment under 37 CFR 1.181, should be promptly filed to minimize any negative effects on patent term.

0 9 JUN 2008

UNITED STATES PATENT AND TRADEMARK OFFICE

Commissioner for Patents
United States Patent and Trademark Office
P.O. Box 1450
Alexandria, VA 22313-1450
www.uspto.gov

Gary D.E. Pierce
PATE, PIERCE & BAIRD
215 South Main Street
Suite 550
Salt Lake City, UT 84111

In re Application of
MARCHILDON, Ted
U.S. Application No.: 10/535,225
PCT No.: PCT/CA2003/001789
Int. Filing Date: 19 November 2003
Priority Date: 19 November 2002
Attorney Docket No.: 3423-2-1
For: PLANT GROWING APPARATUS.

DECISION ON PETITION UNDER 37 CFR 1.137(b)

Applicant's petition to revive under 37 CFR 1.137(b) filed on 17 April 2008 is hereby **GRANTED** as follows:

Applicant submitted a preliminary amendment canceling the additional claims for which the additional fees were due. The petition fee has been paid. Applicant makes the required statement pursuant to 37 CFR 1.137(b)(3). A terminal disclaimer is not required.

Accordingly, all requirements under 37 CFR 1.137(b) have been satisfied.

This application is being forwarded to the United States Designated/Elected Office for further processing.

James Thomson
Attorney Advisor
Office of PCT Legal Administration

Tel.: (571) 272-3302

2 3 JUN 2008

UNITED STATES PATENT AND TRADEMARK OFFICE

Commissioner for Patents
United States Patent and Trademark Office
P.O. Box 1450
Alexandria, VA 22313-1450
www.uspto.gov

Gary D.E. Pierce
PATE, PIERCE & BAIRD
175 South Main Street
Suite 1250
Salt Lake City, UT 84111

In re Application of MARCHILDON, Ted U.S. Application No.: 10/535,225 PCT No.: PCT/CA2003/001789 Int. Filing Date: 19 November 2003 Priority Date: 19 November 2002 Attorney Docket No.: 3423-2-1 For: PLANT GROWING APPARATUS.	**DECISION ON PETITION UNDER 37 CFR 1.137(b)**

Applicant's petition to revive under 37 CFR 1.137(b) filed on 17 April 2008 is hereby **GRANTED** as follows:

Applicant submitted a preliminary amendment canceling the additional claims for which the additional fees were due. The petition fee has been paid. Applicant makes the required statement pursuant to 37 CFR 1.137(b)(3). A terminal disclaimer is not required.

Accordingly, all requirements under 37 CFR 1.137(b) have been satisfied[1].

This application is being forwarded to the United States Designated/Elected Office for further processing.

James Thomson
Attorney Advisor
Office of PCT Legal Administration

Tel.: (571) 272-3302

[1] The original decision was mailed on 09 June 2008 to the address at 215 South Main Street, Suite 550, Salt Lake City, UT 84111. This decision was returned by the USPS as "Return to Sender, Insufficient Address." The undersigned verified the new address with applicant. Applicant must submit a change of correspondence in this application.

UNITED STATES PATENT AND TRADEMARK OFFICE

Commissioner for Patents
United States Patent and Trademark Office
P.O. Box 1450
Alexandria, VA 22313-1450
www.uspto.gov

NIXON & VANDERHYE, PC
901 NORTH GLEBE ROAD
11TH FLOOR
ARLINGTON VA 22203

MAILED

JAN 30 2009

OFFICE OF PETITIONS

In re Application of	:	
Robert Angelo Motterlini, et al.	:	
Application No. 10/535,226	:	DECISION ON PETITION
Filed: May 14, 2005	:	TO WITHDRAW
Attorney Docket No. 620-370	:	FROM RECORD
	:	

This is a decision on the Request to Withdraw as attorney or agent of record under 37 C.F.R. § 1.36(b), filed December 2, 2008.

The request is **APPROVED**.

A grantable request to withdraw as attorney/agent of record must be signed by every attorney/agent seeking to withdraw or contain a clear indication that one attorney is signing on behalf of another/others.

The request was signed by B. J. Sadoff on behalf of all attorneys of record who are associated with customer No. 23117. All attorneys/agents associated with the Customer Number 23117 have been withdrawn. Applicant is reminded that there is no attorney of record at this time.

The correspondence address of record has been changed and the new correspondence address is the address indicated below.

There are no pending Office actions at the present time.

Telephone inquiries concerning this decision should be directed to undersigned at 571-272-1642.

/AMW/
April M. Wise
Petitions Examiner
Office of Petitions

cc: HEMOCORM LIMITED
C/O BIRD & BIRD, 90 FETTER LANE
LONDON, UNITED KINGDOM EC4A 1JP

UNITED STATES PATENT AND TRADEMARK OFFICE

UNITED STATES DEPARTMENT OF COMMERCE
United States Patent and Trademark Office
Address: COMMISSIONER FOR PATENTS
P.O. Box 1450
Alexandria, Virginia 22313-1450
www.uspto.gov

OLIFF & BERRIDGE, PLC
P.O. BOX 320850
ALEXANDRIA, VA 22320-4850

Mail Date: 06/25/2010

Applicant	: Takeshi Chonan	: DECISION ON REQUEST FOR
Patent Number	: 7655301	: RECALCULATION of PATENT
Issue Date	: 02/02/2010	: TERM ADJUSTMENT IN VIEW
Application No	: 10/535,234	: OF WYETH AND NOTICE OF INTENT TO
Filed	: 06/14/2005	: ISSUE CERTIFICATE OF CORRECTION
		:

The Request for Recalculation is **GRANTED** to the extent indicated.

The patent term adjustment has been determined to be **939** days. The USPTO will *sua sponte* issue a certificate of correction reflecting the amount of PTA days determined by the recalculation.

Prior to the issuance of the certificate of correction, the USPTO will afford patentee an opportunity to be heard and request reconsideration. Accordingly, patentee has **one month or thirty (30) days**, whichever is longer, to file a request for reconsideration of this patent term adjustment calculation. See 35 U.S.C. 154(b)(3)(B)(ii) and 37 CFR 1.322(a)(4). No extensions of time will be granted under 37 CFR 1.136.

Patentee should use document code PET.OP if electronically filing a request for reconsideration of this patent term adjustment calculation. The patentee must also include the information required by 37 CFR 1.705(b)(2) and the fee required by 37 CFR 1.18(e). If patentee does not file a timely request for reconsideration of this patent term adjustment calculation including the information required by 37 CFR 1.705(b)(2) and the fee required by 37 CFR 1.18(e), the USPTO will issue a certificate of correction reflecting the PTA determination noted above.

Patentee should be aware that in order to preserve the right to review in the United States District Court for the District of Columbia of the USPTO patent term adjustment determination, patentee must ensure that he or she also take the steps required under 35 U.S.C. 154(b)(4)(A) in a timely manner. Nothing in the request for recalculation should be construed as providing an alternative time frame for commencing a civil action under 35 U.S.C. 154(b)(4)(A).

Any questions concerning this decision should be directed to the Office of Patent Legal Administration at 571-272-7702.

UNITED STATES PATENT AND TRADEMARK OFFICE

UNITED STATES DEPARTMENT OF COMMERCE
United States Patent and Trademark Office
Address: COMMISSIONER FOR PATENTS
P.O. Box 1450
Alexandria, Virginia 22313-1450
www.uspto.gov

MILLEN, WHITE, ZELANO & BRANIGAN, P.C.
2200 CLARENDON BLVD.
SUITE 1400
ARLINGTON, VA 22201

Mail Date: 04/20/2010

Applicant	: Dieter Dorsch	: DECISION ON REQUEST FOR
Patent Number	: 7579346	: RECALCULATION of PATENT
Issue Date	: 08/25/2009	: TERM ADJUSTMENT IN VIEW
Appliction No	: 10/535,246	: OF WYETH AND NOTICE OF INTENT TO
Filed	: 05/18/2005	: ISSUE CERTIFICATE OF CORRECTION
		:

The Request for Recalculation is **GRANTED** to the extent indicated.

The patent term adjustment has been determined to be **932** days. The USPTO will *sua sponte* issue a certificate of correction reflecting the amount of PTA days determined by the recalculation.

Prior to the issuance of the certificate of correction, the USPTO will afford patentee an opportunity to be heard and request reconsideration. Accordingly, patentee has **one month or thirty (30) days**, whichever is longer, to file a request for reconsideration of this patent term adjustment calculation. See 35 U.S.C. 154(b)(3)(B)(ii) and 37 CFR 1.322(a)(4). No extensions of time will be granted under 37 CFR 1.136.

Patentee should use document code PET.OP if electronically filing a request for reconsideration of this patent term adjustment calculation. The patentee must also include the information required by 37 CFR 1.705(b)(2) and the fee required by 37 CFR 1.18(e). If patentee does not file a timely request for reconsideration of this patent term adjustment calculation including the information required by 37 CFR 1.705(b)(2) and the fee required by 37 CFR 1.18(e), the USPTO will issue a certificate of correction reflecting the PTA determination noted above.

Patentee should be aware that in order to preserve the right to review in the United States District Court for the District of Columbia of the USPTO patent term adjustment determination, patentee must ensure that he or she also take the steps required under 35 U.S.C. 154(b)(4)(A) in a timely manner. Nothing in the request for recalculation should be construed as providing an alternative time frame for commencing a civil action under 35 U.S.C. 154(b)(4)(A).

Any questions concerning this decision should be directed to the Office of Patent Legal Administration at 571-272-7702.

UNITED STATES PATENT AND TRADEMARK OFFICE

Commissioner for Patents
United States Patent and Trademark Office
P.O. Box 1450
Alexandria, VA 22313-1450
www.uspto.gov

BROWDY AND NEIMARK, P.L.L.C.
624 NINTH STREET, NW
SUITE 300
WASHINGTON DC 20001-5303

COPY MAILED

AUG 0 3 2007

OFFICE OF PETITIONS

Applicant: Buhler, Philipp
Appl. No.: 10/535254
Filing Date: November 6, 2003
Title: DEVICE FOR CONTACT-LESS MEASUREMENT OF DISTANCES IN MULTIPLE DIRECTIONS
Pub. No.: US 2006/0152320 A1
Pub. Date: July 13, 2006

This is a decision on the request for a corrected patent application publication under 37 CFR 1.221(b), received on September 13, 2006, for the above-identified application

The request is DISMISSED.

Applicant requests that the application be republished because the patent application publication contains an erroneous title.

37 CFR 1.221 (b) is applicable "only when the Office makes a material mistake which is apparent from Office records.... Any request for a corrected publication or revised patent application publication other than provided as provided in paragraph (a) of this section must be filed within two months from the date of the patent application publication. This period is not extendable." A material mistake must affect the public's ability to appreciate the technical disclosure of the patent application publication, to determine the scope of the patent application publication, or to determine the scope of the provisional rights that an applicant may seek to enforce upon issuance of a patent. [1]

The error noted by requestor wherein the title is incorrect may be an Office error, but it is not a material Office error under 37 CFR 1.221. The mistake in title does not affect the public's ability to appreciate the technical disclosure of the patent application publication, or determine the scope of the patent application publication or determine the scope of the provisional rights that an applicant may seek to enforce upon issuance of a patent.

[1] Changes to Implement Eighteen-Month Publication of Patent Applications, 65 FR 57023, 57038 (Sept. 20, 2000), 1239, Off. Gaz. Pat. Office Notices 63, 75 (Oct. 10, 2000) (final rule).

On January 25, 2006, a Filing Receipt was mailed by the Office, which listed the title as "Evaluation Device and Vibration Damper for a Racket." To avoid this type of problem in the future, applicant's representative should make request a corrected filing receipt.

The applicant is advised that a "request for republication of an application previously published" may be filed under 37 CFR 1.221 (a). Such a request for republication "must include a copy of the application compliance with the Office's electronic filing system requirements and be accompanied by the publication fee set forth in § 1.18 (d) and the processing fee set forth in § 1.17 (i)." If the request for republication does not comply with the electronic filing system requirements, the republication will not take place and the publication fee set forth in § 1.18 (d) will be refunded. The processing fee will be retained.

It would greatly benefit the Office if **applicant did not provide copies of papers**, which were previously submitted, as it unnecessarily increases the cost to the Office. See 37 CFR 1.4(b). A request for corrected publication need only point out what was printed incorrectly in the application, where the error occurs in the publication and where the correct text or drawing is found in the application papers. Marked up relevant copies of the applications papers and the pre-grant publication may facilitate processing of the request, where it is not readily apparent where the error occurs. If it is not clear why the error is a material error, further explanation may be warranted.

Any request for republication under 37 CFR 1.221(a), must be submitted via the EFS system and questions or request for reconsideration of the decision, should be addressed as follows:

By mail to: Mail Stop PGPUB
Commissioner for Patents
P.O. Box 1450
Alexandria, Va. 22313-1450

By facsimile: 571-273-8300

Inquiries relating to this matter may be directed to Mark Polutta at (571) 272-7709 (voice).

Mark Polutta
Senior Legal Advisor
Office of Patent Legal Administration
Office of the Deputy Commissioner
for Patent Examination Policy

UNITED STATES PATENT AND TRADEMARK OFFICE

Commissioner for Patents
United States Patent and Trademark Office
P.O. Box 1450
Alexandria, VA 22313-1450
www.uspto.gov

COPY MAILED

SEP 21 2009

OFFICE OF PETITIONS

BROWDY AND NEIMARK, P.L.L.C.
624 NINTH STREET, NW
SUITE 300
WASHINGTON DC 20001-5303

In re Patent No. 7,534,458	:
Sadakiyo, et al.	:
Issue Date: May 19, 2009	: DECISION ON REQUEST FOR
Application No. 10/535,255	: RECONSIDERATION OF
Filed: May 18, 2005	: PATENT TERM ADJUSTMENT
Attorney Docket No. SADAKIYO1	:

This is in response to the "PETITION FOR RECONSIDERATION OF PATENT TERM ADJUSTMENT" filed July 20, 2009, which is properly treated under 37 CFR 1.705(d). Patentees request that the determination of patent term adjustment for the above-identified patent be corrected from seven hundred and ten (710) days to one thousand thirty-six (1036) days.

The request for reconsideration of patent term adjustment is **DISMISSED** with respect to making any change in the patent term adjustment determination under 35 U.S.C. 154(b) of 710 days.

This application was filed on May 18, 2005. On May 19, 2009, the application matured into U.S. Patent No. 7,534,458, with a revised patent term adjustment of 710 days. The Office determined that the 366 days of Office delay pursuant to 35 U.S.C. 154(b)(1)(B) and 37 CFR 1.702(b)[1,2] overlaps with the 710

[1] Pursuant to 35 U.S.C. 154(b)(1)(B), 37 CFR 1.702(b) provides, in pertinent part, that:

Failure to issue a patent within three years of the actual filing date of the application. Subject to the provisions of 35 U.S.C. 154(b) and this subpart, the term of an original patent shall be adjusted if the issuance of the patent was delayed due to the failure of the Office to issue a patent within three years after the date on which the application was filed under 35 U.S.C. 111(a) or the national stage commenced under 35 U.S.C. 371(b) or (f) in an international application

days of Office delay pursuant to 35 U.S.C. 154(b)(1)(A) and 37 CFR 1.702(a)(1)[3,4] accorded prior to the issuance of the patent. As such, the Office allowed only entry of the adjustment of 710 days. No additional days of patent term adjustment were entered at issuance under the three-year pendency provision. Given the applicant delay of 0 days, the patent issued with a revised patent term adjustment of 710 (710 - 0) days.

On July 20, 2009, patentees timely submitted this request for reconsideration of patent term adjustment within two months of the issue date of the patent. See 37 CFR 1.705(d). Patentees aver that the correct number of days of patent term adjustment is 1036 days under the court's interpretation of the overlap provision as set forth in Wyeth v. Dudas, 580 F. Supp. 2d 138, 88 U.S.P.Q.2d 1538 (D.D.C. 2008). Specifically, patentees state that:

> ...the period of patent term adjustment by the interpretation approved by the court in *Wyeth v. Dudas, supra*, is 710 + 366 - 40 (overlapping days) = 1036, minus any delay attributed to applicant's delay (37 CFR 1.704).

Excerpt taken from "Request for Reconsideration of Patent Term Adjustment", 07/20/2009, p.2

---

[2] The application was pending three years and 366 days.

[3] 37 CFR § 1.702, provides grounds for adjustment of patent term due to examination delay under the Patent Term Guarantee Act of 1999 (original applications, other than designs, filed on or after May 29, 2000).

> (a) Failure to take certain actions within specified time frames. Subject to the provisions of 35 U.S.C. 154(b) and this subpart, the term of an original patent shall be adjusted if the issuance of the patent was delayed due to the failure of the Office to:
>
> (1) Mail at least one of a notification under 35 U.S.C. 132 or a notice of allowance under 35 U.S.C. 151 not later than fourteen months after the date on which the application was filed under 35 U.S.C. 111(a) or fulfilled the requirements of 35 U.S.C. 371 in an international application;

[4] A first Office action was not mailed until June 27, 2008, fourteen months and 710 days after the date of completion of all 35 U.S.C. 371 requirements on May 18, 2005.

The Office has considered patentees' interpretation of the period of overlap, but finds it inconsistent with the Office's interpretation of the overlap provision, 35 U.S.C. 154(b)(2)(A). 35 U.S.C. 154(b)(2)(A) limits the adjustment of patent term, as follows:

> to the extent that the periods of delay attributable to grounds specified in paragraph (1) overlap, the period of any adjustment granted under this subsection shall not exceed the actual number of days the issuance of the patent was delayed.

As explained in *Explanation of 37 CFR 1.703(f)*[5] *and of the United States Patent and Trademark Office Interpretation of 35 U.S.C. 154(b)(2)(A)*, 69 Fed. Reg. 34283 (June 21, 2004), the Office interprets 35 U.S.C. 154(b)(2)(A) as permitting either patent term adjustment under 35 U.S.C. 154(b)(1)(A)(i)-(iv), or patent term adjustment under 35 U.S.C. 154(b)(1)(B), but not as permitting patent term adjustment under both 35 U.S.C. 154(b)(1)(A)(i)-(iv) and 154(b)(1)(B). Accordingly, the Office implements the overlap provision as follows:

> If an application is entitled to an adjustment under 35 U.S.C. 154(b)(1)(B), the entire period during which the application was pending (except for periods excluded under 35 U.S.C. 154(b)(1)(B)(i)-(iii)), and not just the period beginning three years after the actual filing date of the application, is the period of delay under 35 U.S.C. 154(b)(1)(B) in determining whether periods of delay overlap under 35 U.S.C. 154(b)(2)(A). Thus, any days of delay for Office issuance of the patent more than 3 years after the filing date of the application, which overlap with the days of patent term adjustment accorded prior to the issuance of the patent will not result in any additional patent term adjustment. See 35 U.S.C. 154(b)(1)(B), 35 U.S.C. 154(b)(2)(A), and 37 CFR

---

[5] Likewise, 37 CFR 1.703(f) provides that:

> To the extent that periods of delay attributable to the grounds specified in § 1.702 overlap, the period of adjustment granted under this section shall not exceed the actual number of days the issuance of the patent was delayed.

§ 1.703(f). See *Changes to Implement Patent Term Adjustment Under Twenty Year Term; Final Rule*, 65 Fed. Reg. 56366 (Sept. 18, 2000). See also *Revision of Patent Term Extension and Patent Term Adjustment Provisions; Final Rule*, 69 Fed. Reg. 21704 (April 22, 2004), 1282 Off. Gaz. Pat. Office 100 (May 18, 2004). See also *Explanation of 37 CFR 1.703(f) and of the United States Patent and Trademark Office Interpretation of 35 U.S.C. 154(b)(2)(A)*, 69 Fed. Reg. 34283 (June 21, 2004).

Further, as stated in the *Explanation of 37 CFR 1.703(f) and of the United States Patent and Trademark Office Interpretation of 35 U.S.C. 154(b)(2)(A)*, the Office has consistently taken the position that if an application is entitled to an adjustment under the three-year pendency provision of 35 U.S.C. 154(b)(1)(B), the entire period during which the application was pending before the Office (except for periods excluded under 35 U.S.C. 154(b)(1)(B)(i)-(iii)), and not just the period beginning three years after the actual filing date of the application, is the relevant period under 35 U.S.C. 154(b)(1)(B) in determining whether periods of delay "overlap" under 35 U.S.C. 154(b)(2)(A).

This interpretation is consistent with the statute. Taken together the statute and rule provide that to the extent that periods of delay attributable to grounds specified in 35 U.S.C. 154(b)(1) and in corresponding 37 CFR 1.702 overlap, the period of adjustment granted shall not exceed the actual number of days the issuance of the patent was delayed.

In this instance, the relevant period under 35 U.S.C. 154(b)(1)(B) in determining whether periods of delay "overlap" under 35 U.S.C. 154(b)(2)(A) is the period during which the application was pending before the Office, May 18, 2008, the date of commencement under 35 USC 371(f), to May 19, 2009, the date of the issuance of the patent (not including any other periods excluded under 35 U.S.C. 154(b)(1)(B)(i)-(iii)).

Pursuant to 35 U.S.C. 154(b)(1)(A) and 37 CFR 1.702(a)(1), 710 days of patent term adjustment were accorded during the pendency of the application for Office delay prior to the issuance of the patent. Pursuant to 35 U.S.C. 154(b)(1)(B) and 37 CFR 1.702(b), 366 days of patent term adjustment accrued for Office issuance of the patent more than three years after the date of commencement of the national stage pursuant to 35 USC 371(f).

All of the 366 days of patent term adjustment under 37 CFR 1.702(b) overlap with the 710 days of patent term adjustment under 37 CFR 1.702(a)(1). Entry of both the 710 days and the 366 days is neither permitted nor warranted. 710 days is the actual number of days issuance of the patent was delayed.

Accordingly, at issuance, the Office properly entered no additional days of patent term adjustment.

In view thereof, the Office affirms that the revised determination of patent term adjustment at the time of the issuance of the patent is 710 days.

The Office acknowledges the submission of the $200.00 fee set forth in 37 CFR 1.18(e). No additional fees are required.

Telephone inquiries specific to this matter should be directed to Kenya A. McLaughlin, Petitions Attorney, at (571) 272-3222.

Christina Tartera Donnell

Christina Tartera Donnell
Senior Petitions Attorney
Office of Petitions

2 0 NOV 2007

UNITED STATES PATENT AND TRADEMARK OFFICE

Commissioner for Patents
United States Patent and Trademark Office
P.O. Box 1450
Alexandria, VA 22313-1450
www.uspto.gov

22504
DAVIS WRIGHT TREMAINE, LLP
2600 Century Square
1501 Fourth Avenue
Seattle, WA 98101-1688

In re Application of	:	
RICHARDS *et al*	:	
U.S. Application No.: 10/535,315	:	
PCT No.: PCT/US2003/036869	:	
Int. Filing Date: 18 November 2003	:	**DECISION**
Priority Date: 18 November 2002	:	
Attorney's Docket No.: 67901-17	:	
For: THERMAL SWITCH, METHODS OF USE	:	
MANUFACTURING METHODS FOR SAME	:	

This is a decision on the "Request for Correction of 371(c) Date" filed 13 March 2006 which is treated under 37 CFR 1.10(c). No petition fee is required.

BACKGROUND

Applicants filed papers to enter the national stage of international application PCT/US2003/036869. These papers were deemed as received on 17 May 2005 by the USPTO.

On 09 December 2005, the DO/EO/US mailed a Notification of Acceptance of Application Under 35 U.S.C. 371 (Form PCT/DO/EO/903) indicating a date of receipt of 35 U.S.C. 371(c)(1), (c)(2) and (c)(4) requirements and all 35 U.S.C. 371 requirements of 17 May 2005. A filing receipt indicating a "Filing or 371(c) Date" of "05/17/2005" was also mailed the same day.

On 13 March 2006, applicants filed the subject petition which was accompanied by, *inter alia*, a copy of the Customer Copy of Express Mail label No. EV484958333US with the USPS receipt and a copy of USPS Track & Confirm records for Express Mail No. EV484958333US.

DISCUSSION

A review of the subject application indicates that the original documents are stamped as received by the Office on 17 May 2005. Applicants claim that the above-captioned application was originally submitted with the USPS using Express Mail on 18 May 2005, not 17 May 2005 and have requested that the filing receipt and Form PCT/DO/EO/903 reflect this.

Any correspondence received by the United States Patent and Trademark Office ("Office") delivered by Express Mail will be considered filed in the Office on the date of deposit with the USPS. 37 CFR § 1.10(a). Moreover, 37 CFR § 1.10(c) states:

> Any person filing correspondence under this section that was received by the Office and delivered by the "Express Mail Post Office to Addressee" service of the USPS, who can show that there is a discrepancy between the filing date accorded by the Office to the correspondence and the date of deposit as shown by the "date - in" on the "Express Mail" mailing label or other official USPS notation, may petition the Commissioner to accord the correspondence a filing date as of the "date - in" on the "Express Mail" mailing label or other official USPS notation, provided that:
>
> (1) The petition is filed promptly after the person becomes aware that the Office has accorded, or will accord, a filing date other than the USPS deposit date;
>
> (2) The number of the "Express Mail" mailing label was placed on the paper(s) or fee(s) that constitute the correspondence prior to the original mailing by "Express Mail;" and
>
> (3) The petition includes a true copy of the "Express Mail" mailing label showing the "date - in," and of any other official notation by the USPS relied upon to show the date of deposit.

A review of the subject application reveals that all the requirements of 37 CFR 1.10(c) have been satisfied. The Express Mail label number is listed on the Application Data Sheet filed with the original papers. Applicants included a copy of the Customer Copy of Express Mail label No. EV484958333US which appears to be stamped by the USPS on "5 17 05." The receipt for payment of the Express Mail documents indicated that it was paid on 18 May 2005 at 2:35 pm. Moreover, applicants provided a copy of the USPS Track/Confirm records for Express Mail label No. EV484958333US which verifies that the documents were accepted by the USPS in Seattle, WA on 18 May 2005 at 2:35 pm.

This evidence is acceptable for a grantable petition under 37 CFR 1.10(c). The original application papers should be stamped as received on 18 May 2005 pursuant to 37 CFR 1.10(a).

CONCLUSION

Applicants' petition pursuant to 37 CFR 1.10(c) is **GRANTED**.

10/535,315

The Form PCT/DO/EO/903 and Filing Receipt mailed 09 December 2005 contain erroneous data and are both hereby **VACATED**.

This application is being forwarded to the Office of Patent Application Processing for processing including mailing a corrected Form PCT/DO/EO/903 and Filing Receipt indicating that the completion of all 35 U.S.C. 371 requirements and 35 U.S.C. 371(c) date of 18 May 2005.

James Thomson

James Thomson
Attorney Advisor
Office of PCT Legal Administration

Tel.: (571) 272-3302

UNITED STATES PATENT AND TRADEMARK OFFICE

UNITED STATES DEPARTMENT OF COMMERCE
United States Patent and Trademark Office
Address: COMMISSIONER FOR PATENTS
P.O. Box 1450
Alexandria, Virginia 22313-1450
www.uspto.gov

CHRISTIE, PARKER & HALE, LLP
PO BOX 7068
PASADENA, CA 91109-7068

Mail Date: 04/21/2010

Applicant	: Donghua Xu	: DECISION ON REQUEST FOR
Patent Number	: 7591910	: RECALCULATION of PATENT
Issue Date	: 09/22/2009	: TERM ADJUSTMENT IN VIEW
Appliction No	: 10/535,317	: OF WYETH AND NOTICE OF INTENT TO
Filed	: 02/03/2006	: ISSUE CERTIFICATE OF CORRECTION
		:

The Request for Recalculation is **GRANTED** to the extent indicated.

The patent term adjustment has been determined to be **327** days. The USPTO will *sua sponte* issue a certificate of correction reflecting the amount of PTA days determined by the recalculation.

Prior to the issuance of the certificate of correction, the USPTO will afford patentee an opportunity to be heard and request reconsideration. Accordingly, patentee has **one month or thirty (30) days**, whichever is longer, to file a request for reconsideration of this patent term adjustment calculation. See 35 U.S.C. 154(b)(3)(B)(ii) and 37 CFR 1.322(a)(4). No extensions of time will be granted under 37 CFR 1.136.

Patentee should use document code PET.OP if electronically filing a request for reconsideration of this patent term adjustment calculation. The patentee must also include the information required by 37 CFR 1.705(b)(2) and the fee required by 37 CFR 1.18(e). If patentee does not file a timely request for reconsideration of this patent term adjustment calculation including the information required by 37 CFR 1.705(b)(2) and the fee required by 37 CFR 1.18(e), the USPTO will issue a certificate of correction reflecting the PTA determination noted above.

Patentee should be aware that in order to preserve the right to review in the United States District Court for the District of Columbia of the USPTO patent term adjustment determination, patentee must ensure that he or she also take the steps required under 35 U.S.C. 154(b)(4)(A) in a timely manner. Nothing in the request for recalculation should be construed as providing an alternative time frame for commencing a civil action under 35 U.S.C. 154(b)(4)(A).

Any questions concerning this decision should be directed to the Office of Patent Legal Administration at 571-272-7702.

UNITED STATES PATENT AND TRADEMARK OFFICE

UNITED STATES DEPARTMENT OF COMMERCE
United States Patent and Trademark Office
Address: COMMISSIONER FOR PATENTS
P.O. Box 1450
Alexandria, Virginia 22313-1450
www.uspto.gov

MCDONNELL BOEHNEN HULBERT & BERGHOFF LLP
300 S. WACKER DRIVE
32ND FLOOR
CHICAGO, IL 60606

Mail Date: 04/21/2010

Applicant	: Maria Petrou	: DECISION ON REQUEST FOR
Patent Number	: 7616790	: RECALCULATION of PATENT
Issue Date	: 11/10/2009	: TERM ADJUSTMENT IN VIEW
Appliction No	: 10/535,323	: OF WYETH AND NOTICE OF INTENT TO
Filed	: 05/18/2005	: ISSUE CERTIFICATE OF CORRECTION
		:

The Request for Recalculation is **GRANTED** to the extent indicated.

The patent term adjustment has been determined to be **1026** days. The USPTO will *sua sponte* issue a certificate of correction reflecting the amount of PTA days determined by the recalculation.

Prior to the issuance of the certificate of correction, the USPTO will afford patentee an opportunity to be heard and request reconsideration. Accordingly, patentee has **one month or thirty (30) days**, whichever is longer, to file a request for reconsideration of this patent term adjustment calculation. See 35 U.S.C. 154(b)(3)(B)(ii) and 37 CFR 1.322(a)(4). No extensions of time will be granted under 37 CFR 1.136.

Patentee should use document code PET.OP if electronically filing a request for reconsideration of this patent term adjustment calculation. The patentee must also include the information required by 37 CFR 1.705(b)(2) and the fee required by 37 CFR 1.18(e). If patentee does not file a timely request for reconsideration of this patent term adjustment calculation including the information required by 37 CFR 1.705(b)(2) and the fee required by 37 CFR 1.18(e), the USPTO will issue a certificate of correction reflecting the PTA determination noted above.

Patentee should be aware that in order to preserve the right to review in the United States District Court for the District of Columbia of the USPTO patent term adjustment determination, patentee must ensure that he or she also take the steps required under 35 U.S.C. 154(b)(4)(A) in a timely manner. Nothing in the request for recalculation should be construed as providing an alternative time frame for commencing a civil action under 35 U.S.C. 154(b)(4)(A).

Any questions concerning this decision should be directed to the Office of Patent Legal Administration at 571-272-7702.

#3

UNITED STATES PATENT AND TRADEMARK OFFICE

Commissioner for Patents
United States Patent and Trademark Office
P.O. Box 1450
Alexandria, VA 22313-1450
www.uspto.gov

18 JAN 2006

LATHROP & GAGE LC
4845 PEARL EAST CIRCLE
SUITE 300
BOULDER CO 80301

In re Application of	:	
CARPENTER	:	
Application No.: 10/535,329	:	DECISION ON
PCT No.: PCT/US03/23173	:	
Int. Filing Date: 25 July 2003	:	PETITION UNDER
Priority Date: 25 July 2002	:	
Attorney Docket No.: 432081	:	37 CFR 1.137(b)
For: SYSTEMS AND METHODS FOR	:	
MEASURING A MATERIAL PROPERTY	:	

This decision is in response to applicants' submission filed 18 May 2005.

BACKGROUND

On 25 July 2003, applicants filed international application PCT/US03/23173 which designated the U.S. and claimed a priority date of 25 July 2002. A copy of the international application was communicated to the United States Patent and Trademark Office (USPTO) from the International Bureau on 05 February 2004. The thirty-month period for paying the basic national fee in the United States expired at midnight on 25 January 2005.

On 18 May 2005, applicants filed a transmittal letter for entry into the national stage in the United States, which was accompanied by, *inter alia*, the basic national fee, an assertion of small entity status, and a petition under 37 CFR 1.137(b) to revive the application.

DISCUSSION

A petition to revive the present application under 37 CFR 1.137(b) must include:
(1) The required reply;
(2) The petition fee;
(3) A statement that the entire delay in filing the required reply from the due date for the reply until the filing of a grantable petition was unintentional.

As to item (1), applicant submitted the basic national fee on 18 May 2005.

As to item (2), applicant submitted the petition fee on 18 May 2005.

As to item (3), the required statement has been provided.

A review of the application file reveals that, with the filing of the present petition and accompanying papers, a proper response has been submitted and all of the requirements of 37 CFR 1.137(b) for revival have been satisfied and revival is therefore appropriate.

CONCLUSION

The petition under 37 CFR 1.137(b) is **GRANTED** for the reasons set forth above.

Please direct further correspondence with respect to this matter to Mail Stop PCT, Commissioner for Patents, Office of PCT Legal Administration, P.O. Box 1450, Alexandria, Virginia 22313-1450, with the contents of the letter marked to the attention of the Office of PCT Legal Administration.

This application is being forwarded to the National Stage Processing Branch of the Office of PCT Operations to continue national stage processing of the application.

Daniel Stemmer
Legal Examiner
PCT Legal Affairs
Office of Patent Cooperation Treaty
Legal Administration
Telephone: (571) 272-3301
Facsimile: (571) 273-0459

19 MAY 2006

UNITED STATES PATENT AND TRADEMARK OFFICE

Commissioner for Patents
United States Patent and Trademark Office
P.O. Box 1450
Alexandria, VA 22313-1450
www.uspto.gov

OSTROLENK FABER GERB & SOFFEN
1180 Avenue Of The Americas
New York, NY 10036-8403

In re Application of:
XU, Guolin, et al.
U.S. Application No.: 10/535,334
PCT No.: PCT/SG2003/000261
International Filing Date: 10 November 2003
Priority Date: 18 November 2002
Attorney's Docket No.: P/2778-63
For: METHOD AND SYSTEM FOR CELL AND/OR NUCLEIC ACID MOLECULES ISOLATION

DECISION ON PETITION UNDER 37 CFR 1.47(a)

This decision is issued in response to applicants' "Petition Under 37 CFR 1.47(a)" filed 21 March 2006. Applicant has submitted the required petition fee.

BACKGROUND

On 10 November 2003, applicants filed international application PCT/SG2003/000261. The application claimed a priority date of 18 November 2002 and designated the United States. On 03 June 2004, the International Bureau (IB) communicated a copy of the international application to the United States Patent and Trademark Office (USPTO). The deadline for submission of the basic national fee was thirty months from the priority date, i.e., 18 May 2005.

On 18 May 2005, applicants filed a Transmittal Letter for entry into the national stage in the United States accompanied by, among other materials, payment of the basic national fee.

On 23 September 2005, the United States Designated/Elected Office (DO/EO/US) mailed a Notification Of Missing Requirement (Form PCT/DO/EO/905) indicating that an executed declaration in compliance with 37 CFR 1.497 and the surcharge for filing the declaration later than thirty months after the priority date was required.

On 21 March 2006, applicants filed a response to the Notification Of Missing Requirements (with required extension fee) that included the required surcharge, a partially executed declaration document, and the petition under 37 CFR 1.47(a) considered herein. The petition seeks acceptance of the application without the signature of inventor Dennis Lee POLLA, whom applicants argue has refused to execute the application.

DISCUSSION

A grantable petition under 37 CFR 1.47(a) must be accompanied by: (1) the fee under 37 CFR 1.17; (2) a statement of the last known address of the nonsigning inventor; (3) an oath or declaration executed by the other inventors on behalf of themselves and the nonsigning inventor; and (4) factual proof that the inventor refuses to execute the application or cannot be reached after diligent effort.

Here, applicants have filed the required petition fee, and the petition expressly states the last known address of the nonsigning inventor. Items (1) and (2) are therefore satisfied.

Regarding item (3), section 409.03(a) of the Manual of Patent Examining Practice (MPEP) states that:

> An oath or declaration signed by all the available joint inventors with the signature block of the nonsigning inventor(s) left blank may be treated as having been signed by all the joint inventors on behalf of the nonsigning inventor(s), unless otherwise indicated.

Applicants here have filed an eight-page declaration executed by eight of the nine inventors and containing an unsigned signature block for the nonsigning inventor, Dennis Lee POLLA. However, this eight-page declaration appears to be a compilation of a number of different copies of a three-page declaration; the compilation is evident from the fact that the declaration document includes two copies of page 1, four copies of page 2, and two copies of page 3. The declaration is therefore not acceptable under 37 CFR 1.497 (see MPEP § 201.03(II)(B): "Where individual declarations are executed, they must be submitted as individual declarations rather than combined into one declaration."). Item (3) is therefore not satisfied.

Regarding item (4), MPEP section 409.03(d) states that "[a] copy of the application papers should be sent to the last known address of the nonsigning inventor, or, if the nonsigning inventor is represented by counsel, to the address of the nonsigning inventor's attorney." The MPEP also states the following:

> Where a refusal of the inventor to sign the application papers is alleged, the circumstances of the presentation of the application papers and of the refusal must be specified in a statement of facts by the person who presented the inventor with the application papers and/or to whom the refusal was made. Statements by a party not present when an oral refusal is made will not be accepted.

Here, applicants provided a statement of facts from Jacqueline WONG, with supporting documents, which includes an email from the nonsigning inventor dated 20 August 2005 in which the inventor states that he would be happy to sign the documents if a copy of these materials, as well as a copy of the US Application, was mailed to him at his U.S. permanent residence. Applicants have also provided a statement from Winnie CHU, with supporting documents, which describes the efforts made to obtain the inventor's signature after receipt of

the 20 August 2005 email. These subsequent efforts involve additional email communications to the inventor, including an email to which a copy of the application was attached. However, applicants have provided no evidence that a copy of the complete application papers, with a request for signature, was sent to the last known address of the inventor, as required by the MPEP and as specifically requested by the inventor in his 20 August 2005 email.

Before item (4) can be considered satisfied, applicants must provide the required firsthand evidence (with documentary support) demonstrating that the complete application papers and a request for signature have been have been delivered to the nonsigning inventor at his last known address, and that the inventor has refused to execute the application papers.

CONCLUSION

Applicants' petition under 37 CFR 1.47(a) is **DISMISSED** without prejudice.

If reconsideration on the merits of the petition is desired, a proper response must be filed within **TWO (2) MONTHS** of the mail date of the present decision. Any request for reconsideration should include a cover letter entitled "Renewed Petition Under 37 CFR 1.47(a)" and must include the materials required to satisfy items (3) and (4) of a grantable petition, as discussed above. No additional petition fee is required.

Failure to file a proper response will result in abandonment of the application. Extensions of time are available under 37 CFR 1.136(a)

Please direct further correspondence with respect to this matter to Mail Stop PCT, Commissioner for Patents, P.O. Box 1450, Alexandria, Virginia 22313-1450, with the contents of the letter marked to the attention of the Office of PCT Legal Administration.

Richard M. Ross
Attorney Advisor
Office of PCT Legal Administration
Telephone: (571) 272-3296
Facsimile: (571) 273-0459

22 DEC 2006

#8

UNITED STATES PATENT AND TRADEMARK OFFICE

Commissioner for Patents
United States Patent and Trademark Office
P.O. Box 1450
Alexandria, VA 22313-1450
www.uspto.gov

OSTROLENK FABER GERB & SOFFEN
1180 Avenue Of The Americas
New York, NY 10036-8403

In re Application of: XU, Guolin, et al. U.S. Application No.: 10/535,334 PCT No.: PCT/SG2003/000261 International Filing Date: 10 November 2003 Priority Date: 18 November 2002 Attorney's Docket No.: P/2778-63 For: METHOD AND SYSTEM FOR CELL AND/OR NUCLEIC ACID MOLECULES ISOLATION	DECISION ON RENEWED PETITION UNDER 37 CFR 1.47(a)

This decision is issued in response to the renewed petition under 37 CFR 1.47(a) filed 21 August 2006. No additional petition fee is required.

BACKGROUND

The procedural background for this application is set forth in the decision mailed by this Office on 19 May 2006. In that decision, applicants' petition under 37 CFR 1.47(a) was dismissed without prejudice for failing to satisfy all the requirements of a grantable petition. Specifically, applicants had not submitted: (1) an acceptable a declaration executed by the inventors on their own behalf and on behalf of the non-signing inventor (the materials submitted by applicants appeared to be a compilation of multiple declaration documents); and (2) an adequate showing that the complete application papers and a request for signature have been delivered to the non-signing inventor at his last known address, and that the inventor has refused to execute the application papers.

On 21 August 2006, applicants filed the renewed petition considered herein (with required extension fee).

DISCUSSION

The renewed petition includes copies of the complete three-page declaration executed by each of the eight signing inventors; these declarations each contain an unsigned signature block for the non-signing inventor. These materials satisfy the declaration requirement of a grantable petition.

With respect to the non-signing inventor's refusal to sign the declaration, the renewed petition includes a supplemental declaration from Winnie Chua, with exhibits, which

demonstrate that: (1) a copy of the application, with a request for signature was delivered to the non-signing inventor at his last known address on 26 June 2006; (2) the inventor responded to this mailing by requesting a copy of the most recently amended version of the application; (3) the requested copy of the application as currently amended, with a repeated request for signature, was delivered to the home of the non-signing inventor on 28 July 2006; and (4) that no response to the 28 July 2006 delivery was received from the non-signing inventor prior to the execution of Ms. Chua's declaration on 17 August 2006. These materials, in combination with those filed with the original petition, provide an acceptable showing that the non-signing inventor has been presented with a copy of the application and has refused to execute the declaration.

CONCLUSION

Based on the above, applicants have now satisfied all the requirements for a grantable petition under 37 CFR 1.47(a). Accordingly, the renewed petition under 37 CFR 1.47(a) is **GRANTED**.

The application is accepted without the signature of non-signing inventor Dennis Lee POLLA.

A notice of the acceptance of the application will be published in the Official Gazette, and a letter informing the non-signing inventor of the application will be forwarded to the non-signing inventor at his last-known address, as set forth in the petition.

The application is being forwarded to the National Stage Processing Branch of the Office of PCT Operations for further processing. The date under 35 U.S.C. 371(c)(1), (c)(2), and (c)(4) is 21 August 2006.

Richard M. Ross
Attorney Advisor
Office of PCT Legal Administration
Telephone: (571) 272-3296
Facsimile: (571) 273-0459

22 DEC 2006

UNITED STATES PATENT AND TRADEMARK OFFICE

Commissioner for Patents
United States Patent and Trademark Office
P.O. Box 1450
Alexandria, VA 22313-1450
www.uspto.gov

Dennis L. POLLA
2830 Hillscourte South
Roseville, Minnesota 55113-2175

In re Application of: XU, Guolin, et al.
U.S. Application No.: 10/535,334
PCT No.: PCT/SG2003/000261
International Filing Date: 10 November 2003
Priority Date: 18 November 2002
Attorney's Docket No.: P/2778-63
For: METHOD AND SYSTEM FOR CELL AND/OR NUCLEIC ACID MOLECULES ISOLATION

Dear Dr. POLLA:

You are identified as an inventor in the above identified United States patent application, filed under the provisions of 37 CFR 1.47(a) and 35 U.S.C. 116. Should a patent be granted, you will be designated as an inventor.

As a named inventor, you are entitled to inspect any paper in the file wrapper of the application, order copies of all or any part thereof (at a prepaid cost per 37 CFR 1.19) or to make your position of record in the application. Alternatively, you may arrange to do any of the preceding through a registered patent agent or attorney presenting written authorization from you. If you care to join the application, counsel of record (see below) would presumably assist you. Joining in the application would entail the filing of an appropriate oath or declaration by you pursuant to 37 CFR 1.63.

Richard M. Ross
Attorney Advisor
Office of PCT Legal Administration
Telephone: (571) 272-3296
Facsimile: (571) 273-0459

Counsel Of Record:
Lawrence A. Hoffman
OSTROLENK FABER GERB & SOFFEN
1180 Avenue Of The Americas
New York, NY 10036-8403

- 4 JAN 2010

United States Patent and Trademark Office

Commissioner for Patents
United States Patent and Trademark Office
P.O. Box 1450
Alexandria, VA 22313-1450
www.uspto.gov

GREENBLUM & BERNSTEIN, P.L.C.
1950 ROLAND CLARKE PLACE
RESTON VA 20191

In re Application of Ono et al. Application No.: 10/535,336 PCT No.: PCT/JP2003/014709 Int. Filing Date: 19 November 2003 Priority Date: 19 November 2002 Attorney Docket No.: P27943 For: Agent For Dissolving Dental Calculi And Dental Caries	:	DECISION

This is in response to the petition under 37 CFR 1.181 filed on 30 October 2009.

BACKGROUND

This international application was filed on 19 November 2003, claimed an earlier priority date of 19 November 2002, and designated the U.S. The International Bureau transmitted a copy of the published international application to the USPTO on 03 June 2004. The 30 month time period for paying the basic national fee in the United States expired at midnight on 19 May 2005. Applicant filed *inter alia* the basic national fee on 18 May 2005.

On 10 November 2005, a Notification of Missing Requirements (Form PCT/DO/EO/905) was mailed to applicants, requiring the submission of an oath or declaration compliant with 37 CFR 1.497(a) and (b), an English translation of the international application, the surcharge under 37 CFR 1.492(h) and the processing fee under 37 CFR 1.492(i).

On 06 January 2006, applicants filed a response.

On 16 February 2006, a Notice of Acceptance (Form PCT/DO/EO/903) showing a 35 U.S.C. 371(c)(1), (2) and (4) date of "01/06/2006" was mailed to applicants.

DISCUSSION

Counsel states that

Upon review of the literal English translation of the International Application, Applicants recognized that there is a more accurate translation of the application from the original PCT application PCT/JP2003/014709. Accordingly, Applicants are submitting this Petition and a Corrected Literal English Translation of the International Application as filed to thereby ensure compliance with 35 U.S.C. 371 and 37 C.F.R. 1.495.

Petitioner's statement that the translation accompanying the petition is a more accurate translation than the translation of record, is accepted. In view of this statement, the Notice of Acceptance mailed on 16 February 2006 is hereby **VACATED**. The English translation filed on 30 October 2009 will be used for continued processing of the application.

Inspection of the declaration filed on 06 January 2006 reveals that it does not appear to have been made on a form supplied by the USPTO, or under Rule 4.17(iv), and that the statement required under 37 CFR 1.69(b) does not appear to have been made. Applicants are required to either provide such statement or else a new oath or declaration

DECISION

The petition is **GRANTED** as noted above.

Applicants must file the response described above within **TWO (2) MONTHS** from the mailing date of this Decision, extendable under 37 CFR 1.136(a). Failure to timely reply will result in **ABANDONMENT**.

Any further correspondence with respect to this matter may be filed electronically via EFS-Web selecting the document description "Petition for review and processing by the PCT Legal Office" or by mail addressed to Mail Stop PCT, Commissioner for Patents, Office of PCT Legal Administration, P.O. Box 1450, Alexandria, Virginia 22313-1450, with the contents of the letter marked to the attention of the Office of PCT Legal Administration.

/George Dombroske/
George Dombroske
PCT Legal Examiner
Office of PCT Legal Administration
Tel: (571) 272-3283

UNITED STATES PATENT AND TRADEMARK OFFICE

Commissioner for Patents
United States Patent and Trademark Office
P.O. Box 1450
Alexandria, VA 22313-1450
www.uspto.gov

PAUL, HASTINGS, JANOFSKY
& WALKER, LLP
875 15TH STREET, NW
WASHINGTON, DC 20005

MAILED

MAY 28 2009

OFFICE OF PETITIONS

In re Application of	:	
Samuel R. DENMEADE, et al	:	
Application No. 10/535,351	:	DECISION ON PETITION
Filed: April 14, 2006	:	TO WITHDRAW
Attorney Docket No. 70778.00202.UTL1	:	FROM RECORD
	:	

This is a decision on the Request to Withdraw as attorney or agent of record under 37 C.F.R. § 1.36(b), filed April 30, 2009.

The request is **APPROVED**.

A grantable request to withdraw as attorney/agent of record must be signed by every attorney/agent seeking to withdraw or contain a clear indication that one attorney is signing on behalf of another/others. The Office requires the practitioner(s) requesting withdrawal to certify that he, she, or they have: (1) given reasonable notice to the client, prior to the expiration of the response period, that the practitioner(s) intends to withdraw from employment; (2) delivered to the client or a duly authorized representative of the client all papers and property (including funds) to which the client is entitled; and (3) notified the client of any responses that may be due and the time frame within which the client must respond, pursuant 37 CFR 10.40(c).

The request was signed by Martin R. Bader on behalf of the attorneys of record associated with Customer No. 36183.

The attorneys of record associated with Customer No. 36183 have been withdrawn.

Applicant is reminded that there is no attorney of record at this time.

All future communications from the Office will be directed to the address indicated below until otherwise properly notified by the applicant.

Telephone inquiries concerning this decision should be directed to the undersigned at 571-272-6735.

Diane Goodwyn
Petitions Examiner
Office of Petitions

cc: GENSPERA, INC.
12100 WILSHIRE BLVD., 8TH FLOOR
LOS ANGELES, CA 90025

UNITED STATES PATENT AND TRADEMARK OFFICE

UNITED STATES DEPARTMENT OF COMMERCE
United States Patent and Trademark Office
Address: COMMISSIONER FOR PATENTS
P.O. Box 1450
Alexandria, Virginia 22313-1450
www.uspto.gov

APPLICATION NUMBER	FILING OR 371(C) DATE	FIRST NAMED APPLICANT	ATTY. DOCKET NO./TITLE
10/535,351	04/14/2006	Samuel R. Denmeade	70778.00202.UTL1

CONFIRMATION NO. 7060

POWER OF ATTORNEY NOTICE

36183
PAUL, HASTINGS, JANOFSKY & WALKER LLP
875 15th Street, NW
Washington, DC 20005

OC000000036164332

Date Mailed: 05/27/2009

NOTICE REGARDING CHANGE OF POWER OF ATTORNEY

This is in response to the Power of Attorney filed 04/30/2009.

- The withdrawal as attorney in this application has been accepted. Future correspondence will be mailed to the new address of record. 37 CFR 1.33.

/dcgoodwyn/

Office of Data Management, Application Assistance Unit (571) 272-4000, or (571) 272-4200, or 1-888-786-0101

UNITED STATES PATENT AND TRADEMARK OFFICE

Commissioner for Patents
United States Patent and Trademark Office
P.O. Box 1450
Alexandria, VA 22313-1450
www.uspto.gov

Barnes & Thornburg
11 South Meridian Street
Indianapolis IN 46204

MAILED

MAR 23 2010

OFFICE OF PETITIONS

In re Patent of Doyle et al.	:	DECISION ON REQUEST
Patent No. 7,575,744	:	FOR RECONSIDERATION OF
Issue Date: August 18, 2009	:	PATENT TERM ADJUSTMENT
Application No. 10/535,357	:	AND NOTICE OF INTENT TO
371 Completion date: May 25, 2005	:	ISSUE CERTIFICATE OF
Attorney Docket No. 31725-77991	:	CORRECTION

This is a decision on the petition filed on September 30, 2009, which is being treated as a petition under 37 C.F.R. § 1.705(d) requesting that the patent term adjustment indicated on the patent be corrected to indicate the term of the above-identified patent is extended or adjusted by six hundred eighty-one (681) days.

The petition to correct the patent term adjustment indicated on the above-identified patent to indicate that the term of the above-identified patent is extended or adjusted by six hundred eighty-one (681) days is **GRANTED to the extent indicated herein**.

Delay under 37 C.F.R. § 1.703(b)

The petition indicates the filing date of the application is May 18, 2005, and the date three years after the filing date of the application is May 18, 2008. The petition asserts the period of delay under 37 C.F.R. § 1.703(b) is 457 days, which is the number of days beginning on May 19, 2008, and ending on August 18, 2009, the date the patent issued.

The period of delay under 37 C.F.R. § 1.703(b) is 450 days, not 457 days, because the period of delay began on the day after the date three years after May 25, 2005, not May 18, 2005.

The period of delay under 37 C.F.R. § 1.703(b) begins on the day after the date three years after the *date of commencement* under 35 U.S.C. 371(b) or (f) for the national stage of an international application. Although application papers were filed on May 18, 2005, the date of commencement under 35 U.S.C. 371(b) or (f) is May 25, 2005.

In this case, the period of delay under 37 C.F.R. § 1.703(b) is the number of days beginning on May 26, 2008, and ending on August 18, 2009, the date the patent issued. In other words, the period of delay under 37 C.F.R. § 1.703(b) is 450 days, not 457 days as asserted by patentees.

Patentees correctly assert the number of days of overlap between delay under 37 C.F.R. § 1.703(a) and 37 C.F.R. § 1.703(b) is 6 days.

The patent term adjustment should have been increased by 444 days (450 - 6) as a result of B Delay.

Delay under 37 C.F.R. § 1.703(a)

Patentees calculate the alleged correct patent term adjustment using a period of delay of 344 days under 37 C.F.R. § 1.703(a)(1). As a result, patentees are indirectly asserting the period of delay under 37 C.F.R. § 1.703(a)(1) is 344 days, not 337 days.

37 C.F.R. § 1.705(d) states,

> Any request for reconsideration under this section that raises issues that were raised, or could have been raised, in an application for patent term adjustment under paragraph (b) of this section shall be dismissed as untimely as to those issues.

Patentees could have filed a petition under 37 C.F.R. § 1.705(b) disputing the Office's determination the period of delay under 37 C.F.R. § 1.703(a)(1) is 337 days. Therefore, to the extent the instant petition requests an increase in the delay under 37 C.F.R. § 1.703(a)(1), the request is dismissed as untimely.

Conclusion

The total period of delay under 37 C.F.R. § 1.703(a) is 343 days.

The period of delay under 37 C.F.R. § 1.703(b) is 457 days.

The number of days of overlap between the periods of delay under 37 C.F.R. § 1.703(a) and 37 C.F.R. § 1.703(b) is 6 days.

The period of delay under 37 C.F.R. § 1.704(c) is 120 days.

The patent term adjustment is 667 days which is the sum of 343 days of Office delay under 37 C.F.R. § 1.703(a) and 450 days of delay under 37 C.F.R. § 1.703(b) reduced by 6 days of overlap and 120 days of delay under 37 C.F.R. § 1.704(c).

The Office will *sua sponte* issue a certificate of correction. Pursuant to 37 C.F.R. § 1.322, the Office will not issue a certificate of correction without first providing assignee or patentee an opportunity to be heard. Accordingly, patentees are given **one (1) month or thirty (30) days**, whichever is longer, from the mail date of this decision to respond. No extensions of time will be granted under 37 C.F.R. § 1.136.

The Office acknowledges submission of the $200.00 fee set forth in 37 C.F.R. § 1.18(e). No additional fees are required.

The application is being forwarded to the Certificates of Correction Branch for issuance of a certificate of correction. The Office will issue a certificate of correction indicating that the term of the patent is extended or adjusted by **six hundred sixty-seven (667)** days.

Telephone inquiries specific to this decision should be directed to Senior Petitions Attorney Steven Brantley at (571) 272-3203.

Anthony Knight
Supervisor
Office of Petitions

Enclosure: Copy of DRAFT Certificate of Correction

UNITED STATES PATENT AND TRADEMARK OFFICE

CERTIFICATE OF CORRECTION

PATENT NO.	:	7,575,744 B2
ISSUE DATE	:	August 18, 2009
INVENTOR(S)	:	Doyle et al.

DRAFT

It is certified that error appears in the above-identified patent and that said Letters Patent is hereby corrected as shown below:

On the cover page,

[*] Notice: Subject to any disclaimer, the term of this patent is extended or adjusted under 35 U.S.C. 154(b) by 330 days.

Delete the phrase "by 330 days" and insert - by 667 days--

US007575744B2

(12) **United States Patent**
Doyle et al.

(10) **Patent No.: US 7,575,744 B2**
(45) **Date of Patent: Aug. 18, 2009**

(54) **COMPOSITION AND METHOD FOR INHIBITION OF MICROORGANISMS**

(75) Inventors: **Michael P. Doyle**, Peachtree City, GA (US); **Tong Zhao**, Peachtree City, GA (US)

(73) Assignee: **University of Georgia Research Foundation, Inc.**, Athens, GA (US)

(*) Notice: Subject to any disclaimer, the term of this patent is extended or adjusted under 35 U.S.C. 154(b) by 330 days.

(21) Appl. No.: **10/535,357**

(22) PCT Filed: **Nov. 24, 2003**

(86) PCT No.: **PCT/US03/37526**

§ 371 (c)(1),
(2), (4) Date: **May 18, 2005**

(87) PCT Pub. No.: **WO2004/048597**

PCT Pub. Date: **Jun. 10, 2004**

(65) **Prior Publication Data**

US 2006/0073129 A1 Apr. 6, 2006

Related U.S. Application Data

(60) Provisional application No. 60/428,863, filed on Nov. 25, 2002.

(51) **Int. Cl.**

A01N 63/00	(2006.01)
C12N 1/20	(2006.01)
C12P 1/00	(2006.01)
D06M 16/00	(2006.01)

(52) **U.S. Cl.** **424/93.4**; 435/252.1; 435/264; 435/267; 435/821; 435/822

(58) **Field of Classification Search** ..... None
See application file for complete search history.

(56) **References Cited**

U.S. PATENT DOCUMENTS

5,186,962	A	2/1993	Hutkins et al.	
5,308,615	A *	5/1994	DeLoach et al.	424/93.3
5,451,369	A *	9/1995	Daeschel et al.	422/28
5,869,066	A	2/1999	Pace et al.	
6,080,401	A	6/2000	Reddy et al.	

FOREIGN PATENT DOCUMENTS

WO WO 02/056694 7/2002

OTHER PUBLICATIONS

PCT International Search Report for PCT/US2003/037526 completed by the U.S. Searching Authority on May 26, 2004.

Leriche et al., "Behavior of *L. monocytogenes* in an artificially made biofilm of a nisin-producing strain of *Lactococcus lactis*", *International Journal of Food Microbiology*, 51(2): 169-182 (1999).

Jeong et al., "Growth of *Listeria monocytogenes* at 21° C. in biofilms with microorganisms islolated from meat and dairy processing environments", *Lebensmittel-Wissenschaft and Technologie*, 27(5): 415-424 (1994).

Lasagno et al., "Selection of bacteriocin producer strains of lactic acid bacteria from a dairy environment", The *New Microbiologica: Official Journal of the Italian Society for Medical, Odontoiatric, and Clinical Microbiology*, 25(1) 37-44 (2002).

Sulzer et al., "Growth inhibition of *Listeria* spp. on Camembert cheese by bacteria producing inhibitory substances", *International Journal of Food Microbiology*, 14(3): 287-296 (1991).

Jeong et al., "Growth of *Listeria monocytogenes* at 10° C. in biofilms with microorganisms isolated from meat and dairy processing environments", *Journal of Food Proctection*, 57(7): 576-586 (1994).

* cited by examiner

Primary Examiner—David M. Naff
Assistant Examiner—Deborah K. Ware
(74) *Attorney, Agent, or Firm*—Barnes & Thornburg LLP

(57) **ABSTRACT**

A composition and method for the inhibition of microorganisms.

7 Claims, 1 Drawing Sheet

UNITED STATES PATENT AND TRADEMARK OFFICE

UNITED STATES DEPARTMENT OF COMMERCE
United States Patent and Trademark Office
Address: COMMISSIONER FOR PATENTS
P.O. Box 1450
Alexandria, Virginia 22313-1450
www.uspto.gov

Barnes & Thornburg
11 South Meridian Street
Indianapols, IN 46204

Mail Date: 04/21/2010

Applicant	: Michael P Doyle	: DECISION ON REQUEST FOR
Patent Number	: 7575744	: RECALCULATION of PATENT
Issue Date	: 08/18/2009	: TERM ADJUSTMENT IN VIEW
Appliction No	: 10/535,357	: OF WYETH AND NOTICE OF INTENT TO
Filed	: 05/18/2005	: ISSUE CERTIFICATE OF CORRECTION
		:

The Request for Recalculation is **GRANTED** to the extent indicated.

The patent term adjustment has been determined to be **1004** days. The USPTO will *sua sponte* issue a certificate of correction reflecting the amount of PTA days determined by the recalculation.

Prior to the issuance of the certificate of correction, the USPTO will afford patentee an opportunity to be heard and request reconsideration. Accordingly, patentee has **one month or thirty (30) days**, whichever is longer, to file a request for reconsideration of this patent term adjustment calculation. See 35 U.S.C. 154(b)(3)(B)(ii) and 37 CFR 1.322(a)(4). No extensions of time will be granted under 37 CFR 1.136.

Patentee should use document code PET.OP if electronically filing a request for reconsideration of this patent term adjustment calculation. The patentee must also include the information required by 37 CFR 1.705(b)(2) and the fee required by 37 CFR 1.18(e). If patentee does not file a timely request for reconsideration of this patent term adjustment calculation including the information required by 37 CFR 1.705(b)(2) and the fee required by 37 CFR 1.18(e), the USPTO will issue a certificate of correction reflecting the PTA determination noted above.

Patentee should be aware that in order to preserve the right to review in the United States District Court for the District of Columbia of the USPTO patent term adjustment determination, patentee must ensure that he or she also take the steps required under 35 U.S.C. 154(b)(4)(A) in a timely manner. Nothing in the request for recalculation should be construed as providing an alternative time frame for commencing a civil action under 35 U.S.C. 154(b)(4)(A).

Any questions concerning this decision should be directed to the Office of Patent Legal Administration at 571-272-7702.

UNITED STATES PATENT AND TRADEMARK OFFICE

UNITED STATES DEPARTMENT OF COMMERCE
United States Patent and Trademark Office
Address: COMMISSIONER FOR PATENTS
P.O. Box 1450
Alexandria, Virginia 22313-1450
www.uspto.gov

BACHMAN & LAPOINTE, P.C.
900 CHAPEL STREET
SUITE 1201
NEW HAVEN, CT 06510

Mail Date: 08/04/2010

Applicant	: Pascal Hennemann	: DECISION ON REQUEST FOR
Patent Number	: 7651002	: RECALCULATION of PATENT
Issue Date	: 01/26/2010	: TERM ADJUSTMENT IN VIEW
Application No	: 10/535,365	: OF WYETH AND NOTICE OF INTENT TO
Filed	: 05/18/2005	: ISSUE CERTIFICATE OF CORRECTION
		:

The Request for Recalculation is **GRANTED** to the extent indicated.

The patent term adjustment has been determined to be **1288** days. The USPTO will *sua sponte* issue a certificate of correction reflecting the amount of PTA days determined by the recalculation.

Prior to the issuance of the certificate of correction, the USPTO will afford patentee an opportunity to be heard and request reconsideration. Accordingly, patentee has **one month or thirty (30) days**, whichever is longer, to file a request for reconsideration of this patent term adjustment calculation. See 35 U.S.C. 154(b)(3)(B)(ii) and 37 CFR 1.322(a)(4). No extensions of time will be granted under 37 CFR 1.136.

Patentee should use document code PET.OP if electronically filing a request for reconsideration of this patent term adjustment calculation. The patentee must also include the information required by 37 CFR 1.705(b)(2) and the fee required by 37 CFR 1.18(e). If patentee does not file a timely request for reconsideration of this patent term adjustment calculation including the information required by 37 CFR 1.705(b)(2) and the fee required by 37 CFR 1.18(e), the USPTO will issue a certificate of correction reflecting the PTA determination noted above.

Patentee should be aware that in order to preserve the right to review in the United States District Court for the District of Columbia of the USPTO patent term adjustment determination, patentee must ensure that he or she also take the steps required under 35 U.S.C. 154(b)(4)(A) in a timely manner. Nothing in the request for recalculation should be construed as providing an alternative time frame for commencing a civil action under 35 U.S.C. 154(b)(4)(A).

Any questions concerning this decision should be directed to the Office of Patent Legal Administration at 571-272-7702.

18 JUL 2006

UNITED STATES PATENT AND TRADEMARK OFFICE

Commissioner for Patents
United States Patent and Trademark Office
P.O. Box 1450
Alexandria, VA 22313-1450
www.uspto.gov

John E. Toupal
116 Concord Street
Framingham, MA 01702

In re Application of	:	
SUPLINSKAS	:	
U.S. Application No.: 10/535,377	:	DECISION ON REQUEST
PCT No.: PCT/US03/20628	:	
Int. Filing Date: 01 July 2003	:	UNDER 37 CFR 1.42
Priority Date: 26 November 2002	:	
Attorney Docket No.: D.1587-PCT-US	:	
For: SUBSTRATE AND METHOD FOR THE	:	
FORMATION OF CONTINUOUS MAGNESIUM	:	
DIBORIDE AND DOPED MAGNESIUM	:	
DIBORIDE WIRES	:	

This decision is in response to applicant's "Response to Notification of Missing Requirements" filed in the United States Patent and Trademark Office (USPTO) on 14 February 2006. The response is being treated as a request for status under 37 CFR §1.42. No petition fee is due.

BACKGROUND

On 01 July 2003, applicant filed international application PCT/US03/20628 which claimed priority to an earlier application filed 26 November 2002. Pursuant to 37 CFR 1.495, the thirty-month period for paying the basic national fee in the United States expired at midnight on 26 May 2005.

On 19 May 2005, applicant filed a transmittal letter for entry into the national stage in the United States which was accompanied by the requisite basic national fee as required by 35 U.S.C. 371(c)(1).

On 07 November 2005, applicant was mailed a "NOTIFICATION OF MISSING REQUIREMENTS UNDER 35 U.S.C. 371" (Form PCT/DO/EO/905) informing applicant of the need to provide an oath or declaration of the inventor, in compliance with 37 CFR 1.497(a) and (b), identifying the application by the international application number and international filing date. Applicant was afforded two months to file the proper reply and informed that this period could be extended pursuant to 37 CFR 1.136(a).

On 14 February 2006, applicant filed the present response accompanied by a petition for a two-month extension of time and payment of the appropriate extension of time fee. As such, the response is considered timely filed.

DISCUSSION

Pursuant to 37 CFR 1.42, first sentence:

"In case of the death of the inventor, the legal representative (executor, administrator, etc.) of the deceased inventor may make the necessary oath or declaration, and apply for and obtain a patent."

The declaration filed 14 February 2006 is executed by Janet Suplinskas as the sole heir and legal representative to estate of deceased inventor, Raymond J. Suplinskas. The declaration provides the residence, post office address and country of citizenship for both the deceased inventor and his legal representative and thus satisfies the provisions of 37 CFR 1.497(a)-(b). Therefore, it is proper to grant applicant's request for status under 37 CFR 1.42 at this time.

CONCLUSION

Applicant's request for status of papers under 37 CFR 1.42 is **GRANTED**.

This application will be given an international application filing date of 01 July 2003 and a date of **14 February 2006** under 35 U.S.C. 371(c)(1), (c)(2) and (c)(4).

This application is being returned to the DO/EO/US for processing in accordance with this decision.

Derek A. Putonen
Attorney Advisor
Office of PCT Legal Administration
Tel: (571) 272-3294
Fax: (571) 273-0459

UNITED STATES PATENT AND TRADEMARK OFFICE

Commissioner for Patents
United States Patent and Trademark Office
P.O. Box 1450
Alexandria, VA 22313-1450
www.uspto.gov

#4

11 JAN 2006

COOPER CAMERON CORPORATION
PO BOX 1212
HOUSTON TX 77251-1212

In re Application of DELVES et al. Application No.: 10/535,379 PCT No.: PCT/GB03/04695 Int. Filing Date: 03 November 2003 Priority Date: 05 November 2002 Attorney Docket No.: DPS-030805 PET-1011US For: APPARATUS FOR TRANSFERRING SETTLED OR SUSPENDED SOLIDS FROM AN OPEN VESSEL INTO A CLOSED VESSEL	DECISION ON PETITION UNDER 37 CFR 1.137(a)

This decision is in response to applicants' submission filed 19 May 2005.

BACKGROUND

On 03 November 2003, applicants filed international application PCT/GB03/04695 which designated the U.S. and claimed a priority date of 05 November 2002. A copy of the international application was communicated to the United States Patent and Trademark Office (USPTO) from the International Bureau on 21 May 2004. The thirty-month period for paying the basic national fee in the United States expired at midnight on 05 May 2005.

On 19 May 2005, applicants filed a transmittal letter for entry into the national stage in the United States, which was accompanied by, *inter alia*, the U.S. Basic National Fee and a petition under 37 CFR 1.137(a) to revive the application.

DISCUSSION

Under 37 CFR 1.137(a), a petition requesting that the application be revived on the grounds of unavoidable delay must be filed promptly after applicant becomes aware of the abandonment, and such petition must be accompanied by: (1) A proper response, unless already filed; (2) The petition fee as set forth in 37 CFR 1.17(l); (3) A showing to the satisfaction of the Commissioner that the entire delay in filing the required reply from the due date for the reply until the filing of a grantable petition pursuant to this paragraph was unavoidable; and (4) A terminal disclaimer (if necessary).

Applicants have satisfied items (1)-(3) above; item (4) is not applicable.

Applicants also request that the petition fee be refunded. However, refunds may be granted only for any fee paid by mistake or in excess of that required. 37 CFR 1.26. Here, the petition fee is required and is not in excess.

CONCLUSION

The petition under 37 CFR 1.137(a) is **GRANTED** for the reasons set forth above.

The request for refund is REFUSED for the reasons set forth above.

This application is being forwarded to the National Stage Processing Branch of the Office of PCT Operations to continue national stage processing of the application including preparing and mailing a NOTIFICATION OF MISSING REQUIREMENTS (Form PCT/DO/EO/905) requiring an oath or declaration of the inventors in compliance with 37 CFR 1.497(a)-(b).

Daniel Stemmer
Legal Examiner
PCT Legal Affairs
Office of Patent Cooperation Treaty
Legal Administration
Telephone: (571) 272-3301
Facsimile: (571) 273-0459

UNITED STATES PATENT AND TRADEMARK OFFICE

UNITED STATES DEPARTMENT OF COMMERCE
United States Patent and Trademark Office
Address: COMMISSIONER FOR PATENTS
P.O. Box 1450
Alexandria, Virginia 22313-1450
www.uspto.gov

OCCHIUTI ROHLICEK & TSAO, LLP
10 FAWCETT STREET
CAMBRIDGE, MA 02138

Mail Date: 04/20/2010

Applicant	: Serge Fdida	: DECISION ON REQUEST FOR
Patent Number	: 7596626	: RECALCULATION of PATENT
Issue Date	: 09/29/2009	: TERM ADJUSTMENT IN VIEW
Appliction No	: 10/535,380	: OF WYETH AND NOTICE OF INTENT TO
Filed	: 05/19/2005	: ISSUE CERTIFICATE OF CORRECTION
		:

The Request for Recalculation is **GRANTED** to the extent indicated.

The patent term adjustment has been determined to be **1071** days. The USPTO will *sua sponte* issue a certificate of correction reflecting the amount of PTA days determined by the recalculation.

Prior to the issuance of the certificate of correction, the USPTO will afford patentee an opportunity to be heard and request reconsideration. Accordingly, patentee has **one month or thirty (30) days**, whichever is longer, to file a request for reconsideration of this patent term adjustment calculation. See 35 U.S.C. 154(b)(3)(B)(ii) and 37 CFR 1.322(a)(4). No extensions of time will be granted under 37 CFR 1.136.

Patentee should use document code PET.OP if electronically filing a request for reconsideration of this patent term adjustment calculation. The patentee must also include the information required by 37 CFR 1.705(b)(2) and the fee required by 37 CFR 1.18(e). If patentee does not file a timely request for reconsideration of this patent term adjustment calculation including the information required by 37 CFR 1.705(b)(2) and the fee required by 37 CFR 1.18(e), the USPTO will issue a certificate of correction reflecting the PTA determination noted above.

Patentee should be aware that in order to preserve the right to review in the United States District Court for the District of Columbia of the USPTO patent term adjustment determination, patentee must ensure that he or she also take the steps required under 35 U.S.C. 154(b)(4)(A) in a timely manner. Nothing in the request for recalculation should be construed as providing an alternative time frame for commencing a civil action under 35 U.S.C. 154(b)(4)(A).

Any questions concerning this decision should be directed to the Office of Patent Legal Administration at 571-272-7702.

UNITED STATES PATENT AND TRADEMARK OFFICE

UNITED STATES DEPARTMENT OF COMMERCE
United States Patent and Trademark Office
Address: COMMISSIONER FOR PATENTS
P.O. Box 1450
Alexandria, Virginia 22313-1450
www.uspto.gov

APPLICATION NO.	FILING DATE	FIRST NAMED INVENTOR	ATTORNEY DOCKET NO.	CONFIRMATION NO.
10/535,388	05/17/2005	Tsuneo Kusunoki	09792909-6255	5812

7590 12/13/2007
SONNENSCHEIN NATH & ROSENTHAL LLP
P.O. BOX 061080
WACKER DRIVE STATION, SEARS TOWER
CHICAGO, IL 60606-1080

EXAMINER

ART UNIT	PAPER NUMBER
2625	

MAIL DATE	DELIVERY MODE
12/13/2007	PAPER

DECISION DISMISSING PETITION UNDER 37 CFR 1.138(d)

The declaration of express abandonment will not be recognized

This is in response to the petition under 37 CFR 1.138(d), requesting for a refund of any previously paid search fee and excess claims fee in the above-identified application.

The petition is dismissed.

The express abandonment will **not** be recognized for the reason(s) indicated below:

1. ☐ The petition was not filed in sufficient time to permit the appropriate officials to recognize the abandonment before an examination has been made of the application. See 37 CFR 1.138(d).
2. ☐ The petition was not signed by a party authorized by 37 CFR 1.33(b)(1), (3) or (4).
3. ☑ The application is not an application filed under 35 U.S.C. 111(a) on or after December 8, 2004.
4. ☐ The petition for express abandonment under 1.138(d) is dismissed because the applicant did not pay any search fee and excess claims fees in the above-identified application.

Telephone inquiries should be directed to the Office of Data Management at (571) 272-4200.

Kaletris King
Patent Publication Branch
Office of Data Management

FORM PET651D (Rev. 08/07)

#3

UNITED STATES PATENT AND TRADEMARK OFFICE

06 JAN 2006

Commissioner for Patents
United States Patent and Trademark Office
P.O. Box 1450
Alexandria, VA 22313-1450
www.uspto.gov

Ira Lee Zebrak
The Boc Group Inc
Legal Services Intellectual Property
575 Mountain Avenue
Murray Hill NJ 07974

In re Application of SCHOFIELD, Nigel Paul et al. Application No.: 10/535,390 PCT No.: PCT/GB03/03167 Int. Filing Date: 21 July 2003 Priority Date: 29 July 2002 Docket No.: M02B151 For: CONDITION MONITORING OF PUMPS AND PUMP SYSTEM	DECISION ON PETITION UNDER 37 CFR 1.137(b)

Applicants' "Petition For Revival of an International Application For Patent Designating the U.S. Abandoned Unintentionally Under 37 CFR 1.137(b)," filed in the above-captioned application on 18 May 2005 is **GRANTED**.

Applicants state "the entire delay in filing the required reply from the due date for the required reply until the filing of a grantable petition under 37 CFR 1.137(b) was unintentional," as required by 37 CFR 1.137(b)(3). The appropriate national fee and petition fee have been submitted. A terminal disclaimer is not required as the application was filed on or after 08 June 1995. Accordingly, all requirements under 37 CFR 1.137(b) have been satisfied.

The declaration complies with 37 CFR 1.497(a)-(b).

This application is being forwarded to the National Stage Processing Branch of the Office of PCT Operations for continued processing in accordance with this decision. The application has a 35 U.S.C. 371(c)(1), (c)(2) and (c)(4) date of 18 May 2005.

Erin P. Thomson

Erin P. Thomson
Attorney Advisor
PCT Legal Administration

Telephone: 571-272-3292
Facsimile: 571-273-0459

UNITED STATES PATENT AND TRADEMARK OFFICE

Commissioner for Patents
United States Patent and Trademark Office
P.O. Box 1450
Alexandria, VA 22313-1450
www.uspto.gov

EDWARDS VACUUM, INC.
2041 MISSION COLLEGE BOULEVARD
SUITE 260
SANTA CLARA, CA 95054

MAILED

JUN 15 2009

OFFICE OF PETITIONS

In re Application of :
Nigel Paul Schofield et al :
Application No. 10/535,390 : ON PETITION
Filed: May 18, 2005 :
Attorney Docket No. M02B151 :

This is a decision on the petition under the unintentional provisions of 37 CFR 1.137(b), filed May 11, 2009, to revive the above-identified application.

The petition is **GRANTED.**

The application became abandoned for failure to timely file a reply within the meaning of 37 CFR 1.113 to the final Office action of February 13, 2008. The proposed reply required for consideration of a petition to revive must be a Notice of Appeal (and appeal fee required by 37 CFR 41.20(b)(2), an amendment that prima facie places the application in condition for allowance, a Request for Continued Examination and submission (37 CFR 1.114), or the filing of a continuing application under 37 CFR 1.53(b). See MPEP 711.03(c)(III)(A)(2). No extension of time pursuant to the provisions of 37 CFR 1.136(a) was obtained. Accordingly, the date of abandonment of this application is May 14, 2008.

The petition satisfies the requirements of 37 CFR 1.137(b) in that petitioner has supplied (1) the reply in the form of a Request for Continued Examination (RCE) and fee of $810 and the submission required by 37 CFR 1.114; (2) the petition fee of $1620; and (3) a proper statement of unintentional delay.

Telephone inquiries concerning this decision should be directed to the undersigned at (571) 272-3210.

This application is being referred to Technology Center AU 2856 for processing of the RCE and for appropriate action by the Examiner in the normal course of business on the amendment submitted in accordance with 37 CFR 1.114.

Irvin Dingle
Petition Examiner
Office of Petitions

UNITED STATES PATENT AND TRADEMARK OFFICE

UNITED STATES DEPARTMENT OF COMMERCE
United States Patent and Trademark Office
Address: COMMISSIONER FOR PATENTS
P.O. Box 1450
Alexandria, Virginia 22313-1450
www.uspto.gov

YOUNG & THOMPSON
209 Madison Street
Suite 500
Alexandria, VA 22314

Mail Date: 04/20/2010

Applicant	: Guy Schott	: DECISION ON REQUEST FOR
Patent Number	: 7604119	: RECALCULATION of PATENT
Issue Date	: 10/20/2009	: TERM ADJUSTMENT IN VIEW
Appliction No	: 10/535,429	: OF WYETH AND NOTICE OF INTENT TO
Filed	: 01/05/2006	: ISSUE CERTIFICATE OF CORRECTION
		:

The Request for Recalculation is **GRANTED** to the extent indicated.

The patent term adjustment has been determined to be **929** days. The USPTO will *sua sponte* issue a certificate of correction reflecting the amount of PTA days determined by the recalculation.

Prior to the issuance of the certificate of correction, the USPTO will afford patentee an opportunity to be heard and request reconsideration. Accordingly, patentee has **one month or thirty (30) days**, whichever is longer, to file a request for reconsideration of this patent term adjustment calculation. See 35 U.S.C. 154(b)(3)(B)(ii) and 37 CFR 1.322(a)(4). No extensions of time will be granted under 37 CFR 1.136.

Patentee should use document code PET.OP if electronically filing a request for reconsideration of this patent term adjustment calculation. The patentee must also include the information required by 37 CFR 1.705(b)(2) and the fee required by 37 CFR 1.18(e). If patentee does not file a timely request for reconsideration of this patent term adjustment calculation including the information required by 37 CFR 1.705(b)(2) and the fee required by 37 CFR 1.18(e), the USPTO will issue a certificate of correction reflecting the PTA determination noted above.

Patentee should be aware that in order to preserve the right to review in the United States District Court for the District of Columbia of the USPTO patent term adjustment determination, patentee must ensure that he or she also take the steps required under 35 U.S.C. 154(b)(4)(A) in a timely manner. Nothing in the request for recalculation should be construed as providing an alternative time frame for commencing a civil action under 35 U.S.C. 154(b)(4)(A).

Any questions concerning this decision should be directed to the Office of Patent Legal Administration at 571-272-7702.

12 SEP 2006

UNITED STATES PATENT AND TRADEMARK OFFICE

Commissioner for Patents
United States Patent and Trademark Office
P.O. Box 1450
Alexandria, VA 22313-1450
www.uspto.gov

WEINGARTEN, SCHURGIN, GAGNEBIN & LEBOVICI LLP
TEN POST OFFICE SQUARE
BOSTON, MA 02109

In re Application of	:	
GENCO, Caroline A. et al.	:	
Application No.: 10/535,490	:	DECISION ON
PCT No.: PCT/US03/37013	:	
Int. Filing Date: 18 November 2003	:	PETITION
Priority Date: 18 November 2002	:	
Attorney Docket No.: BU-096XX	:	UNDER 37 CFR 1.10(d)
For: IMMUNIZATION WITH ...	:	
AGAINST HEART DISEASE	:	

This decision is in response to applicant's "Petition Under 37 C.F.R. §1.110(d) to Accord a Filing Date," filed on 27 April 2006. It has been treated as a petition under 37 CFR 1.10(d).

BACKGROUND

On 18 November 2003, applicant filed international application PCT/US03/37013, claiming a priority date of 18 November 2002. The deadline for entry into the national stage in the United States was thirty months from the priority date, 18 May 2005.

Applicant filed a transmittal letter for entry into the national stage in the United States, accompanied by the basic national fee by Express Mail. The date-in on the Express Mail mailing label indicated 17 May 2005 and the papers were accorded the date-in as their receipt date.

On 07 December 2005, the Office mailed Notification of Acceptance (Form PCT/DO/EO/903) indicating that the application had a 35 U.S.C. 371(c)(1), (c)(2) and (c)(4) date of 17 May 2005.

On 27 April 2006, applicant submitted a petition under 37 CFR 1.10(d) to correct the receipt date of the basic national fee.

DISCUSSION

Applicant argues that the application was submitted to the USPS on 18 May 2005. 37 CFR § 1.10(d) allows an applicant to petition to correct an incorrectly entered "Date In" of an Express Mail receipt and states that:

> (d) Any person filing correspondence under this section that was received by the Office and delivered by the "Express Mail Post Office to Addressee" service of the USPS, who can show that the"date-in" on the "Express Mail" mailing label or other official notation entered by the USPS was incorrectly entered or omitted by the USPS, may petition the Director to accord the correspondence a filing date as of the date the correspondence is shown to have been deposited with the USPS, provided that:
>
> (1) The petition is filed promptly after the person becomes aware that the Office has accorded, or will accord, a filing date based upon an incorrect entry by the USPS;

(2) The number of the "Express Mail" mailing label was placed on the paper(s) or fee(s) that constitute the correspondence prior to the original mailing by "Express Mail";

(3) The petition includes a showing which establishes, to the satisfaction of the Director, that the requested filing date was the date the correspondence was deposited in the "Express Mail Post Office to Addressee" service prior to the last scheduled pickup for that day. Any showing pursuant to this paragraph must be corroborated by evidence from the USPS or that came into being after deposit and within one business day of the deposit of the correspondence in the "Express Mail Post Office to Addressee" service of the USPS.

Applicant has satisfied items (1), (2) and (3). The petition was filed promptly and the papers in the file reflect the mailing label number. Applicant has supplied the Express Mail mailing label showing a stamp indicating 18 May 2005 and other applicant records indicating a deposit date of 18 May 2005.

Applicant supplied a declaration under PCT Rule 26*ter* during the international phase, but the declaration does not list the international application number. As such, it does not comply with 37 CFR 1.497(a)-(b). A new oath or declaration in compliance with 37 CFR 1.497(a)-(b) is required.

CONCLUSION

For the reasons set forth above, the petition under 37 CFR 1.10(d) is **GRANTED**.

The Notice of Acceptance (Form PCT/DO/EO/903) and Filing Receipt mailed 07 December 2005 are **VACATED**.

This application is being forwarded to the National Stage Processing Branch of the Office of PCT Operations for further processing in accordance with this decision, including issuance of a Notification of Missing Requirements indicating that an oath or declaration in compliance with 37 CFR 1.497(a)-(b) and the fee for furnishing the search fee, examination fee or oath or declaration later than 30 months from the priority date are required.

Erin P. Thomson

Erin P. Thomson
Attorney Advisor
PCT Legal Administration

Telephone: 571-272-3292
Facsimile: 571-273-0459

1 6 JAN 2009

United States Patent and Trademark Office

Commissioner for Patents
United States Patent and Trademark Office
P.O. Box 1450
Alexandria, VA 22313-1450
www.uspto.gov

BIRCH STEWART KOLASCH & BIRCH
PO BOX 747
FALLS CHURCH VA 22040-0747

In re Application of	:	
Ito et al.	:	
Application No.: 10/535,496	:	
PCT No.: PCT/JP2003/014283	:	
Int. Filing Date: 10 November 2003	:	DECISION
Priority Date: 18 November 2002	:	
Attorney Docket No.: 0038-0460PUS1	:	
For: Tightening Bandx	:	

This is in response to the petition under 37 CFR 1.137(b) and the submission under 37 CFR 1.48(a) (which is being treated under 37 CFR 1.497(d)) filed on 08 April 2008.

BACKGROUND

This international application was filed on 10 November 2003, claimed an earlier priority date of 18 November 2002, and designated the U.S. The International Bureau transmitted a copy of the published international application to the USPTO on 03 June 2004. The 30 month time period for paying the basic national fee in the United States expired at midnight on 18 May 2005. Applicant filed *inter alia* the basic national fee on 18 May 2005.

On 22 March 2006, a Notification of Missing Requirements (Form PCT/DO/EO/905) was mailed to applicants, requiring an oath or declaration compliant with 37 CFR 1.497(a) and (b).

On 24 April 2006, applicants filed a response, including a declaration.

On 31 August 2006, a Notification of Defective Response (Form PCT/DO/EO/916) was mailed to applicants, indicating that the declaration "is not executed in accordance with either 37 CFR 1.66 or 1.68."

On 29 September 2006, applicants filed another response, including a declaration.

On 08 February 2008, a Notification of Abandonment (Form PCT/DO/EO/909) was mailed to counsel, indicating that this international application had become abandoned with respect to the national stage in the United States for failure to timely reply to the Notification of Missing Requirements mailed on 31 August 2006.

DISCUSSION

Petition Under 37 CFR 1.137(b)

The petition to revive under 37 CFR 1.137(b) filed on 08 April 2008 in the above-captioned application is hereby **GRANTED** as follows:

The petition states that "the entire delay in filing the required reply from the due date for the required reply until the filing of a grantable petition under 37 CFR 1.137(b) was unintentional." Said statement is accepted in satisfaction of 37 CFR 1.137(b)(3).

A review of the application file reveals that applicant has filed the required reply in the form of the declaration filed on 08 April 2008, and has paid the petition fee. No terminal disclaimer is required. Thus, the requirements for revival under 37 CFR 1.137(b) have been satisfied.

Petitioner requests a refund of the petition fee, arguing that "in view of the fact that Applicant did timely respond to the Notice of Defective Reply on September 30, 2006 and did not receive any further written communication from the U.S. Patent and Trademark Office, it is respectfully submitted that the present application was not abandoned." Applicant is respectfully advised that the Notification of Defective Response mailed on 31 August 2006 served to advise counsel that the response earlier received on 24 April 2006 was defective, and that it also served to provide applicant with a further opportunity to perfect the required response. Despite this additional opportunity, applicant in fact did not timely provide an oath or declaration compliant with 37 CFR 1.497(a) and (b). Existing policy does not provide for the mailing of a second Notification of Defective Response. Accordingly, the application properly was regarded as abandoned.

Request Under 37 CFR 1.497(d)

Counsel requests correction of inventorship under 37 CFR 1.48(a); however, the appropriate regulation governing this request would be 37 CFR 1.497(d).

Inspection of the declarations filed on 24 April 2006 and 29 September 2006 reveals that they do not nominate the entire inventive entity named in the published international application; instead, they nominate only inventors Ito and Fushimi. Petitioner requests the addition of Fujimoro and Yajima as inventors. However, review of the record reveals that the inventive entity named in the international phase consisted of inventors Ito, Fushimi, Yajima and Fujimori, the same inventors who are named in the declaration filed on 08 April 2008. The record does not include any evidence suggesting that a change in inventorship (e.g., pursuant to Rule 92*bis*) occurred during the international phase. As such, the request under 37 CFR 1.497(d)(brought under 1.48(a)) is moot.

DECISION

The petition under 37 CFR 1.137(b) is **GRANTED**.

The request under 37 CFR 1.497(d) is **DISMISSED AS MOOT**, without prejudice.

This application is being forwarded to the Office of Patent Application Processing. Its date under 35 U.S.C. 371(c)(1), (2) and (4) is **08 April 2008** (the date that an acceptable declaration under 37 CFR 1.497(a) and (b) was filed).

/George Dombroske/
George Dombroske
PCT Legal Examiner
Office of PCT Legal Administration
Tel: (571) 272-3283
Fax: (571) 273-0459

UNITED STATES PATENT AND TRADEMARK OFFICE

Commissioner for Patents
United States Patent and Trademark Office
P.O. Box 1450
Alexandria, VA 22313-1450
www.uspto.gov

OSTRAGER CHONG FLAHERTY & BROITMAN PC
570 LEXINGTON AVENUE
FLOOR 17
NEW YORK NY 10022-6894

COPY MAILED

OCT 2 2 2009

OFFICE OF PETITIONS

In re Patent No. 7,501,363	:	
Application No. 10/535,498	:	
Filed: May 18, 2005	:	ON PETITION
Issued: March 10, 2009	:	
Attorney Docket No. AWL-223-2002-US	:	

This is a decision on the petition filed March 24, 2009, which is being treated as a request under 37 CFR 3.81(b)[1] to correct the name, of the assignee on the front page of the above-identified patent by way of a Certificate of Correction.

The request is **GRANTED**.

This matter is being referred to the Certificates of Correction Branch for issuance of the requested Certificate of Correction.

Telephone inquiries concerning this decision may be directed to Joan Olszewski at (571) 272-7751. Inquiries regarding the certificate of correction should be directed to the Certificate of Correction Branch at (571) 272-4200.

/Liana Walsh/
Liana Walsh
Petitions Examiner
Office of Petitions

[1] *See* MPEP 1309, subsection II; and Official Gazette of June 22, 2004.

IN THE UNITED STATES PATENT AND TRADEMARK OFFICE

Patentee	:	Rahul K. Dharmadhikary et al.
Patent No.	:	7,501,363 B2
Issue Date	:	March 10, 2009
For	:	ETHYLENE OXIDE STERILIZABLE, LOW-COST NONWOVEN LAMINATES WITH HIGH WET PEEL STREGTH AND IMPROVED BARRIER PROPERTIES

Commissioner for Patents
Office of Patent Publication
Attention Certificate of Correction Branch
P. O. Box 1450
Alexandria, Virginia 22313-1450

REQUEST FOR CORRECTION OF ASSIGNEE'S NAME

Sir:

Pursuant to 37 CFR § 3.81(b) and MPEP § 1481.01, the assignee of the above-identified patent requests that the patent be corrected to identify the name of the assignee of record in the application from which this patent issued (Ser. No. 10/535,498).

An Assignment transferring ownership of this patent from Ahlstrom Mount Holly Springs LLC to Ahlstrom Windsor Locks LLC, Windsor Locks, CT was recorded in the Patent Office on March 18, 2004 at reel 014439, frame 0300.

Submitted herewith is a Certificate of Correction under 37 CFR § 1.323 that certifies the following error appears in the above-identified patent:

The name and address of the Assignee is incorrectly identified as "The Boeing Company, Chicago, IL (US)".

Adjustment date: 10/22/2009 CKHLOK
03/24/2009 INTEFSW 00008447 10535498
01 FC:1811 -100.00 OP
02 FC:1808 -130.00 OP

10/22/2009 CKHLOK 00000005 7501363
01 FC:1808 130.00 OP
02 FC:1811 100.00 OP

It is therefore requested that the above-identified patent be reprinted to correctly identify "Ahlstrom Windsor Locks LLC, Windsor Locks, CT" as the Assignee.

The foregoing mistake occurred in good faith due to a clerical error made by Assignee's counsel in the Issue Fee Transmittal form filed January 7, 2009, and does not affect the scope or meaning of the patent or constitute new matter, as the assignment was recorded almost three years before the Issue Fee Transmittal form was filed. 35 U.S.C. § 255.

The fee set forth in the 37 CFR § 1.20(a) for the certificate of correction ($100) and the processing fee ($130) set forth in 37 CFR 1.17(i) is submitted herewith. If any additional fee is required or if any overpayment is due to be refunded, the Commissioner is authorized to charge or debit Deposit Account No. 50-3195.

Respectfully Submitted,

Attorney for Applicant

Dated: March 24, 2009

/joshua s. broitman/

Joshua S. Broitman
Registration No. 38,006
OSTRAGER CHONG FLAHERTY AND BROITMAN, PC
570 Lexington Avenue, 17th Floor
New York, NY 10022-6894
Phone: (212) 681-0600

PTO/SB/44 (09-07)
Approved for use through 08/31/2010. OMB 0651-0033
U.S. Patent and Trademark Office; U.S. DEPARTMENT OF COMMERCE
Under the Paperwork Reduction Act of 1995, no persons are required to respond to a collection of information unless it displays a valid OMB control number.
(Also Form PTO-1050)

UNITED STATES PATENT AND TRADEMARK OFFICE
CERTIFICATE OF CORRECTION

PATENT NO. : 7,501,363 B2

APPLICATION NO.: 10/535,498

ISSUE DATE : March 10, 2009

INVENTOR(S) : Rahul K. Dharmadhikary et al.

It is certified that an error appears or errors appear in the above-identified patent and that said Letters Patent is hereby corrected as shown below:

In "(73) Assignee:," delete "The Boeing Company, Chicago, IL" and insert

–Ahlstrom Windsor Locks LLC, Windsor Locks, CT--.

MAILING ADDRESS OF SENDER (Please do not use customer number below):

Ostrager Chong Flaherty & Broitman P.C.
570 Lexington Avenue, 17th Floor
New York, NY 10022-6894

This collection of information is required by 37 CFR 1.322, 1.323, and 1.324. The information is required to obtain or retain a benefit by the public which is to file (and by the USPTO to process) an application. Confidentiality is governed by 35 U.S.C. 122 and 37 CFR 1.14. This collection is estimated to take 1.0 hour to complete, including gathering, preparing, and submitting the completed application form to the USPTO. Time will vary depending upon the individual case. Any comments on the amount of time you require to complete this form and/or suggestions for reducing this burden, should be sent to the Chief Information Officer, U.S. Patent and Trademark Office, U.S. Department of Commerce, P.O. Box 1450, Alexandria, VA 22313-1450. DO NOT SEND FEES OR COMPLETED FORMS TO THIS ADDRESS. **SEND TO: Attention Certificate of Corrections Branch, Commissioner for Patents, P.O. Box 1450, Alexandria, VA 22313-1450.**

If you need assistance in completing the form, call 1-800-PTO-9199 and select option 2.

UNITED STATES PATENT AND TRADEMARK OFFICE

Commissioner for Patents
United States Patent and Trademark Office
P.O. Box 1450
Alexandria, VA 22313-1450
www.uspto.gov

NIXON & VANDERHYE, PC
901 NORTH GLEBE ROAD, 11TH FLOOR
ARLINGTON, VA 22203

COPY MAILED

JAN 14 2009

OFFICE OF PETITIONS

In re Application of
Roberto Angelo MOTTERLINI, et al
Application No. 10/535,508
Filed: December 16, 2005
Attorney Docket No. BJS-620-371

DECISION ON PETITION
TO WITHDRAW
FROM RECORD

This is a decision on the Request to Withdraw as attorney or agent of record under 37 C.F.R. § 1.36(b), filed December 2, 2008.

The request is **NOT APPROVED**.

A grantable request to withdraw as attorney/agent of record must be signed by every attorney/agent seeking to withdraw or contain a clear indication that one attorney is signing on behalf of another/others. The Office requires the practitioner(s) requesting withdrawal to certify that he, she, or they have: (1) given reasonable notice to the client, prior to the expiration of the response period, that the practitioner(s) intends to withdraw from employment; (2) delivered to the client or a duly authorized representative of the client all papers and property (including funds) to which the client is entitled; and (3) notified the client of any responses that may be due and the time frame within which the client must respond, pursuant 37 CFR 10.40(c).

The request cannot be approved because the attorneys of record were not appointed by Customer Number 23117, as indicated.

All future communications from the Office will continue to be directed to the above-listed address until otherwise notified by applicant.

Telephone inquiries concerning this decision should be directed to the undersigned at 571-272-6735.

Diane Goodwyn
Petitions Examiner
Office of Petitions

#3

UNITED STATES PATENT AND TRADEMARK OFFICE

Commissioner for Patents
United States Patent and Trademark Office
P.O. Box 1450
Alexandria, VA 22313-1450
www.uspto.gov

21 DEC 2005

KLARQUIST SPARKMAN, LLP
121 S.W. SALMON STREET
SUITE 1600
PORTLAND OR 97204

In re Application of HODGE et al. Application No.: 10/535,523 PCT No.: PCT/US03/37143 Int. Filing Date: 18 November 2003 Priority Date: 18 November 2002 Attorney Docket No.: 6395-66741-06 For: CELL LINES AND HOST NUCLEIC ACID SEQUENCES RELATED TO INFECTIOUS DISEASE	DECISION ON PETITION UNDER 37 CFR 1.182

This is a decision on applicants' "PETITION TO CHANGE NAME OF INVENTOR" filed under 37 CFR 1.182 in the United States Patent and Trademark Office (USPTO) on 07 September 2005. Applicants request that the application reflect joint inventor Natalie J. Morey's name change to Natalie J. McDonald. The $130 petition fee has been paid.

Applicant submitted the petition under 37 CFR 1.182 along with the declaration of Natalie J. Morey. The declaration states that Natalie J. Morey changed her name to Natalie J. McDonald upon her marriage. Thus, the evidence is sufficient to conclude that inventor Morey changed her name to Natalie J. McDonald.

The petition under 37 CFR 1.182 to change the inventor's name from Natalie J. Morey to Natalie J. McDonald is **GRANTED**. The application will be forwarded to the United States Designated/Elected Office for further processing.

It is noted that the declaration submitted on 17 May 2005 is comprised of 2 Page 1s and 3 Page 2s. The declaration contained duplicate signature pages. Each page is signed by different inventors and combined into one declaration. The declaration is not properly executed. It appears that either the attorney pieced together separate complete declarations into one composite declaration or the inventors were presented with an incomplete declaration. What is required is one declaration where all inventors have signed or separate complete declarations. Thus, the requirements of 37 CFR 1.497 (a) and (b) have not been met and the declaration is unacceptable as filed.

Cynthia M. Kratz

Cynthia M. Kratz
Attorney Advisor
PCT Legal Office

Telephone: 571-272-3286
Facsimile: 571-273-0459

03 NOV 2005

03 NOV 2005

UNITED STATES PATENT AND TRADEMARK OFFICE

Commissioner for Patents
United States Patent and Trademark Office
P.O. Box 1450
Alexandria, VA 22313-1450
www.uspto.gov

Neil F. Greenblum
Greenblum & Bernstein, P.L.C.
1950 Roland Clark Place
Reston, VA 20191

Dear Mr. Greenblum:

On 20 May 2005, you filed in the United States Patent and Trademark Office (USPTO) papers requesting entry into the national phase of international application PCT/EP03/13295, filed 21 November 2003, entitled THREE DIMENSIONAL TOMOGRAPHIC FABRIC ASSEMBLY. The inventors are indicated as Ian Christison SAYERS and Stewart Lister HAY. Your attorney docket number is P27748.

The inventors have filed separate papers requesting entry into the national phase of international application PCT/EP03/13295 and have appointed lawyers from another firm to represent them before the USPTO. The papers that you filed on 20 May 2005 have been placed in the national stage application filed by the applicants. The fees paid on 20 May 2005 in application 10/535,838 will be refunded to Deposit Account No.: 19-0089 and the file terminated. Since applicants have separate appointed attorneys, no further communications with respect to this application will be mailed to you.

Derek A. Putonen
Attorney Advisor
Office of PCT Legal Administration
Tel: (571) 272-3294
Fax: (571) 273-0459

UNITED STATES PATENT AND TRADEMARK OFFICE

UNITED STATES DEPARTMENT OF COMMERCE
United States Patent and Trademark Office
Address: COMMISSIONER FOR PATENTS
P.O. Box 1450
Alexandria, Virginia 22313-1450
www.uspto.gov

HUNTON & WILLIAMS LLP
INTELLECTUAL PROPERTY DEPARTMENT
1900 K STREET, N.W.
SUITE 1200
WASHINGTON, DC 20006-1109

Mail Date: 04/28/2010

Applicant	: Eric Ferrandis	: DECISION ON REQUEST FOR
Patent Number	: 7655438	: RECALCULATION of PATENT
Issue Date	: 02/02/2010	: TERM ADJUSTMENT IN VIEW
Application No	: 10/535,545	: OF WYETH AND NOTICE OF INTENT TO
Filed	: 05/18/2005	: ISSUE CERTIFICATE OF CORRECTION
		:

The Request for Recalculation is **GRANTED** to the extent indicated.

The patent term adjustment has been determined to be **944** days. The USPTO will *sua sponte* issue a certificate of correction reflecting the amount of PTA days determined by the recalculation.

Prior to the issuance of the certificate of correction, the USPTO will afford patentee an opportunity to be heard and request reconsideration. Accordingly, patentee has **one month or thirty (30) days**, whichever is longer, to file a request for reconsideration of this patent term adjustment calculation. See 35 U.S.C. 154(b)(3)(B)(ii) and 37 CFR 1.322(a)(4). No extensions of time will be granted under 37 CFR 1.136.

Patentee should use document code PET.OP if electronically filing a request for reconsideration of this patent term adjustment calculation. The patentee must also include the information required by 37 CFR 1.705(b)(2) and the fee required by 37 CFR 1.18(e). If patentee does not file a timely request for reconsideration of this patent term adjustment calculation including the information required by 37 CFR 1.705(b)(2) and the fee required by 37 CFR 1.18(e), the USPTO will issue a certificate of correction reflecting the PTA determination noted above.

Patentee should be aware that in order to preserve the right to review in the United States District Court for the District of Columbia of the USPTO patent term adjustment determination, patentee must ensure that he or she also take the steps required under 35 U.S.C. 154(b)(4)(A) in a timely manner. Nothing in the request for recalculation should be construed as providing an alternative time frame for commencing a civil action under 35 U.S.C. 154(b)(4)(A).

Any questions concerning this decision should be directed to the Office of Patent Legal Administration at 571-272-7702.

UNITED STATES PATENT AND TRADEMARK OFFICE

Commissioner for Patents
United States Patent and Trademark Office
P.O. Box 1450
Alexandria, VA 22313-1450
www.uspto.g

NXP, B.V.
NXP INTELLECTUAL PROPERTY DEPARTMENT
M/S41-SJ
1109 MCKAY DRIVE
SAN JOSE, CA 95131

COPY MAILED

JUL 25 2008

In re Application of	:	
De Langen et al.	:	
Application No. 10/535,557	:	ON PETITION
Filed: May 18, 2005	:	
Attorney Docket No. US02 0456 US	:	

This is a decision on the petition under the unintentional provisions of 37 CFR 1.137(b), filed June 3, 2008, to revive the above-identified application.

The petition is **GRANTED**.

The application became abandoned for failure to reply in a timely manner to the non-final Office action mailed, April 20, 2007, which set a shortened statutory period for reply of three (3) months. No extensions of time under the provisions of 37 CFR 1.136(a) were obtained. Accordingly, the application became abandoned on July 21, 2007. A Notice of Abandonment was mailed November 14, 2007.

The petition satisfies the requirements of 37 CFR 1.137(b) in that petitioner has supplied (1) the reply in the form of an Amendment, (2) the petition fee of $1,540.00, and (3) an adequate statement of unintentional delay.

It is not apparent whether the person signing the statement of unintentional delay was in a position to have firsthand or direct knowledge of the facts and circumstances of the delay at issue. Nevertheless, such statement is being treated as having been made as the result of a reasonable inquiry into the facts and circumstances of such delay. See 37 CFR 10.18(b) and Changes to Patent Practice and Procedure; Final Rule Notice, 62 Fed. Reg. 53131, 53178 (October 10, 1997), 1203 Off. Gaz. Pat. Office 63, 103 (October 21, 1997). In the event that such an inquiry has not been made, petitioner must make such an inquiry. If such inquiry results in the discovery that it is not correct that the entire delay in filing the required reply from the due date for the reply until the filing of a grantable petition pursuant to 37 CFR 1.137(b) was unintentional, petitioner must notify the Office.

There is no indication that the person signing the petition was ever given a power of attorney to prosecute the application. If the person signing the petition desires to receive future correspondence regarding this application, the appropriate power of attorney document must be submitted. While a courtesy copy of this decision is being mailed to the person signing the

petition, all future correspondence will be directed to the address currently of record until appropriate instructions are received.

Telephone inquiries concerning this decision should be directed to Joan Olszewski at (571) 272-7751.

This application is being referred to Technology Center AU 2819 for appropriate action by the Examiner in the normal course of business on the reply received.

Liana Walsh
Petitions Examiner
Office of Petitions

cc: Mark A. Wilson
PMB: 348
2530 Berryessa Road
San Jose, CA 95132

07 SEP 2006

UNITED STATES PATENT AND TRADEMARK OFFICE

COMMISSIONER FOR PATENTS
UNITED STATES PATENT AND TRADEMARK OFFICE
P.O. BOX 1450
ALEXANDRIA, VA 22313-1450
www.uspto.gov

Paul J. White
NATIONAL RENEWABLE ENERGY LABORATORY
1617 COLE BOULEVARD
GOLDEN, CO 80401

In re Application of: GREGG, Brian A.	:	
U.S. Application No.: 10/535,561	:	
PCT Application No.: PCT/US04/30201	:	DECISION ON
Int. Filing Date: 16 September 2004	:	PETITION UNDER
Priority Date Claimed: 16 September 2003	:	37 CFR 1.78(a)(6)
Attorney Docket No.: PCT/03-15	:	
For: Organic Photovolaic Cells with an Electric	:	
Field Integrally-Formed at the Heterojunction	:	
Interface	:	

This decision is a response to Applicants' "Petition to Accept An Unintentionally Delayed Claim Under 37 CFR 1.78(a)(2)(ii)", filed 31 May 2006, requesting acceptance of an unintentionally delayed claim for priority under 37 CFR 1.78(a)(2)(ii). Because the petition pertains to a priority claim to a prior-filed *provisional* application, the petition is being treated as a petition under 37 CFR 1.78(a)(6) to accept an unintentionally delayed claim for priority under 35 USC 119(e) for the benefit of the prior-filed provisional application, 60/503,336, filed 16 September 2003.

The petition under 37 CFR 1.78(a)(6) is **DISMISSED**.

A petition under 37 CFR 1.78(a)(6) is only applicable to those applications filed on or after November 29, 2000. Further, the petition is appropriate only after expiration of the period specified in 37 CFR 1.78(a)(5)(ii) and must be filed during the pendency of the non-provisional application. In addition, the petition must be accompanied by:

(1) the reference required by 35 USC 119(e) and 37 CFR 1.78(a)(5)(i) to the prior-filed application, unless previously submitted;
(2) the surcharge set forth in 1.17(t); and
(3) a statement that the entire delay between the date the claims was due under 37 CFR 1.78(a)(5)(ii) and the date the claim was filed was

unintentional. The Director may require additional information where there is a question whether delay was unintentional.

The instant pending non-provisional application was filed after November 29, 2000, and the claim herein for the benefit of priority to the prior-filed provisional application is submitted after expiration of the period specified in 37 CFR 1.78(a)(5)(ii). Therefore, this is a proper petition under 37 CFR 1.78(a)(6).

Regarding item (1), Applicant has failed to provide a reference to the above-noted, prior-filed provisional application as provided by 37 CFR 1.78(a)(5)(iii). Specifically, the reference must either appear in the first sentence of the specification or in an application data sheet (ADS). Therefore, this item has not been satisfied.

Regarding item (2), Applicant has authorized payment of the $1,370 surcharge fee as required by 37 CFR 1.17(t), through Deposit Account No. 14-0460. Therefore, this item has been satisfied.

Regarding item (3), Applicant's statement "the undersigned declares that the date of the claim as filed was unintentional due to a typographical error in the serial number" fails to indicate that the entire delay was unintentional. Therefore, item (3) has not been satisfied.

Accordingly, having found that the instant petition for acceptance of an unintentionally delayed claim for the benefit of priority under 35 USC 119(e) to the above-noted, prior-filed provisional application does not satisfy all of the conditions of 37 CFR 1.78(a)(6), the petition is dismissed.

Before the petition under 37 CFR 1.78(a)(6) can be granted, a renewed petition under 37 CFR 1.78(a)(6) is required. Further correspondence with respect to this matter should be addressed as follows:

By mail: Mail Stop PCT
Attn: Office of PCT Legal Administration
Post Office Box 1450
Alexandria, VA 22313-1450

By hand: Customer Service Window
Mail Stop PCT
Randolph Building
401 Dulany Street
Alexandria, VA 22314

By Fax: (571) 273-8300
Attn: Office of PCT Legal Administration

Any questions concerning this decision may be directed to the Office of PCT Legal Administration. All other inquiries concerning either the examination procedure or status of the application should be directed to the Technology Center.

Dionne W. Mayes
PCT Legal Administration Detailee
Telephone: 571-272-6094
Facsimile: 571-273-0459

Boris Milef
PCT Legal Examiner
Office of PCT Legal Administration

DO NOT SCAN! **Please forward case and paper to address shown below.**

SPE RESPONSE FOR CERTIFICATE OF CORRECTION

Paper No.: _____

DATE : 7-16-08

TO SPE OF : ART UNIT 3722

SUBJECT : Request for Certificate of Correction for Appl. No.: 10/535568 Patent No.: 7367096

Please respond to this request for a certificate of correction within 7 days.

Please review the requested changes/corrections as shown in the attached certificate of correction. Please complete this form (see below) and forward it with the file to:

Certificates of Correction Branch (CofC)
South Tower - 9A22
Palm Location 7580

E Young

Certificates of Correction Branch

703-308-9390 ext. 117

Thank You For Your Assistance

The request for issuing the above-identified correction(s) is hereby:

Note your decision on the appropriate box.

- ☒ Approved — All changes apply.
- ☐ Approved in Part — Specify below which changes do not apply.
- ☐ Denied — State the reasons for denial below.

Comments: _____

UNITED STATES PATENT AND TRADEMARK OFFICE

Commissioner for Patents
United States Patent and Trademark Office
P.O. Box 1450
Alexandria, VA 22313-1450
www.uspto.gov

NXP, B.V.
NXP INTELLECTUAL PROPERTY DEPARTMENT
M/S41-SJ
1109 MCKAY DRIVE
SAN JOSE, CA 95131

COPY MAILED
JUL 23 2008

In re Application of	:	
Jan-Willem Van De Waerdt, et. al.	:	
Application No. 10/535,591	:	ON PETITION
Filed: May 19, 2005	:	
Attorney Docket No. US02 0465 US	:	

This is a decision on the petition under 37 CFR 1.137(b), filed December 10, 2007, to revive the above-identified application.

The application became abandoned for failure to respond to the non-final Office action mailed May 7, 2007. A Notice of Abandonment was mailed on December 7, 2007.

There is no indication that the person signing the instant petition was ever given a power of attorney or authorization of agent to prosecute the above-identified application. However, in accordance with 37 CFR 1.34(a), the signature of Robert J. Crawford appearing on the petition shall constitute a representation to the United States Patent and Trademark Office that he is authorized to represent the particular party in whose behalf he acts. If Mr. Crawford desires to receive future correspondence regarding this application, the appropriate power of attorney or authorization of agent must be submitted. A courtesy copy of this decision is being mailed to petitioner. Nevertheless, all future correspondence regarding this application file will be directed solely to the address of record until otherwise instructed.

Additionally, it is not apparent whether the statement of unintentional delay was signed by a person who would have been in a position of knowing that the entire delay in filing the required reply from the due date for the reply until the filing of a grantable petition pursuant to 37 CFR 1.137(b) was unintentional. Nevertheless, in accordance with 37 CFR 10.18, the statement is accepted as constituting a certification of unintentional delay. However, in the event that petitioner has no knowledge that the delay was unintentional, petitioner must make such an

inquiry to ascertain that, in fact, the delay was unintentional. If petitioner discovers that the delay was intentional, petitioner must so notify the Office.

The petition satisfies the requirements of 37 CFR 1.137(b) in that petitioner has supplied (1) the reply in the form of an amendment; (2) the petition fee of $1,540; and (3) a proper statement of unintentional delay. Therefore, the petition is **GRANTED**.

This application file is being referred to Technology Center Art Unit 2188 for review of the amendment filed with the instant petition.

Telephone inquiries concerning this decision should be directed to the undersigned at (571) 272-3226.

Andrea Smith
Petitions Examiner
Office of Petitions

cc: Robert J. Crawford
Crawford Maunu, PLLC
1270 Northland Drive, Suite 390
St. Paul, MN 55120

UNITED STATES PATENT AND TRADEMARK OFFICE

Commissioner for Patents
United States Patent and Trademark Office
P.O. Box 1450
Alexandria, VA 22313-1450
www.uspto.gov

NXP, B.V.
NXP INTELLECTUAL PROPERTY & LICENSING
M/S41-SJ
1109 MCKAY DRIVE
SAN JOSE CA 95131

MAILED

JUN 17 2010

OFFICE OF PETITIONS

In re Application of	:	
Jan-Willem Van De Waerdt, et al.	:	
Application No. 10/535,591	:	ON PETITION
Filed: May 19, 2005	:	
Attorney Docket No. US02 0465 US	:	

This is a decision on the petition under the unintentional provisions of 37 CFR 1.137(b), filed May 6, 2010, to revive the above-identified application.

The petition is **GRANTED**.

The application became abandoned for failure to timely file a reply within the meaning of 37 CFR 1.113 to the final Office action of October 5, 2009. The proposed reply required for consideration of a petition to revive must be a Notice of Appeal (and appeal fee required by 37 CFR 41.20(b)(2), an amendment that *prima facie* places the application in condition for allowance, a Request for Continued Examination and submission (37 CFR 1.114), or the filing of a continuing application under 37 CFR 1.53(b). See MPEP 711.03(c)(III)(A)(2). No extensions of time pursuant to the provisions of 37 CFR 1.136(a) were obtained. Accordingly, the date of abandonment of this application is January 6, 2010. The Notice of Abandonment was mailed April 26, 2010.

The petition satisfies the requirements of 37 CFR 1.137(b) in that petitioner has supplied (1) the reply in the form of a Request for Continued Examination (RCE) and fee of $810, and the submission required by 37 CFR 1.114; (2) the petition fee of $1,620; and (3) a proper statement of unintentional delay.

Telephone inquiries concerning this decision should be directed to the undersigned at (571) 272-2991.

It is not apparent whether the person signing the statement of unintentional delay was in a position to have firsthand or direct knowledge of the facts and circumstances of the delay at issue. Nevertheless, such statement is being treated as having been made as the result of a reasonable inquiry into the facts and circumstances of such delay. See 37 CFR 10.18(b) and Changes to Patent Practice and Procedure; Final Rule Notice, 62 Fed. Reg. 53131, 53178 (October 10, 1997), 1203 Off. Gaz. Pat. Office 63, 103 (October 21, 1997). In the event that such an inquiry has not been made, petitioner must make such an inquiry. If such inquiry results in the discovery that it is not correct that the entire delay in filing the required reply from the due date for the reply until the filing of a grantable petition pursuant to 37 CFR 1.137(b) was unintentional, petitioner must notify the Office.

This application is being referred to Technology Center AU 2187 for processing of the RCE and for appropriate action by the Examiner in the normal course of business on the amendment submitted in accordance with 37 CFR 1.114.

Terri Johnson

Terri Johnson
Petitions Examiner
Office of Petitions

UNITED STATES PATENT AND TRADEMARK OFFICE

Commissioner for Patents
United States Patent and Trademark Office
P.O. Box 1450
Alexandria, VA 22313-1450
www.uspto.gov

11 AUG 2006

DEMONT & BREYER, LLC
SUITE 250
100 COMMONS WAY
HOLMDEL NJ 07733

In re Application of:	:	
HOUSTON, John, Graeme, et al.	:	
Application No.: 10/535,600	:	DECISION
PCT No.: PCT/GB2003/004917	:	
Int. Filing Date: 13 November 2003	:	
Priority Date: 23 November 2002	:	
Attorney Docket No.: 9931-008US	:	
For: HELICAL FORMATION FOR A	:	
CONDUIT	:	

This communication is issued in response to the "Request For Correction Of Notice Of Acceptance Of Application In Accordance With 37 CFR 1.181" filed 20 March 2006, treated herein as a petition under 37 CFR 1.181. No petition fee is required.

BACKGROUND

On 13 November 2003, applicant filed international application PCT/GB2003/004917. The international application claimed a priority date of 23 November 2002, and it designated the United States. On 10 June 2004, the International Bureau (IB) communicated a copy of the international application to the United States Patent And Trademark Office (USPTO). The deadline for payment of the basic national fee was thirty months from the priority date, i.e., 23 May 2005.

On 19 May 2005, applicants filed a transmittal letter for entry into the national stage in the United States accompanied by, among other materials, payment of the basic national fee and a copy of the international application (specification, claims, drawings, and abstract).

On 26 September 2005, the United States Designated/Elected Office (DO/EO/US) mailed a Notification Of Missing Requirements (Form PCT/DO/EO/905) requiring submission of an oath or declaration in compliance with 37 CFR 1.497 and the surcharge for filing the oath or declaration later than thirty months after the priority date.

On 03 October 2005, applicant filed a response to the Notification Of Missing Requirements consisting of an executed declaration in compliance with 37 CFR 1.497 and the required surcharge payment.

On 07 March 2006, the DO/EO/US mailed a Notification Of Acceptance (Form PCT/DO/EO/903) that identified 03 October 2005 as the "Date Of Completion Of All 35 U.S.C. 371(c) Requirements" and the "Date Of Receipt Of 35 U.S.C. 371(c)(1), (c)(2), And (c)(4) Requirements." However, the Notification Of Acceptance also identified the receipt date for the specification, claims, drawings and abstract filed 19 may 2005 as 03 October 2005.

On 20 March 2006, applicants filed the "Request For Correction Of Notice Of Acceptance Of Application In Accordance With 37 CFR 1.181" considered herein as a petition under 37 CFR 1.181. The petition requests that a corrected Notification Of Acceptance which properly identifies the receipt date of the specification, claims, drawings, and abstract as 19 May 2005.

DISCUSSION

A review of the application file and the return postcard included with the present petition confirms that a copy specification, claims, drawings and abstract were filed by applicants on 19 May 2005 with the materials initiating this national stage application. Accordingly, the 03 October 2005 receipt date listed for these items on the Notification Of Acceptance mailed 07 March 2006 is incorrect. As indicated by applicants in the present submission, the filing dates for these items should be listed as 19 May 2005.

CONCLUSION

The petition under 37 CFR 1.181 is **GRANTED**.

The Notification Of Acceptance (Form PCT/DO/EO/903) mailed 07 March 2006 is hereby **VACATED**.

This application is being referred to the National Stage Processing Branch of the Office Of PCT Operations for further processing in accordance with this decision, including the mailing of a corrected Notification Of Acceptance (Form PCT/DO/EO/903) in which the filing date indicated for the specification, claims, drawings, and abstract is properly listed as 19 May 2005.

Richard M. Ross
Attorney Advisor
Office of PCT Legal Administration
Telephone: (571) 272-3296
Facsimile: (571) 273-0459

18 OCT 20

#3

UNITED STATES PATENT and TRADEMARK OFFICE

COMMISSIONER FOR PATENTS
UNITED STATES PATENT AND TRADEMARK OFFICE
P.O BOX 1450
ALEXANDRIA, VA 22313-1450
www.uspto.gov

Gerald H. Kiel, Esq.
Reed Smith LLP
599 Lexington Avenue
New York, NY 10022-7650

In re Application of	:	DECISION ON
GRIEBEL et al	:	
PCT No.: PCT/DE2003/003637	:	
Application No.: 10/535601	:	PAPERS FILED
Int. Filing Date: 29 October 2003	:	
Priority Date: 19 November 2002	:	
Attorney's Docket No.: 026418	:	UNDER 37 CFR 1.42
For: METHOD FOR THE INTRODUCTION OF AN	:	
INTEGRATED ... EXPANSIVE BODY	:	

This is a decision on the declaration filed 19 May 2005, which has been treated as a request for status under 37 CFR 1.42.

BACKGROUND

On 19 May 2005, applicants filed a transmittal letter for entry into the national stage in the United States which was accompanied by, inter alia, the requisite basic national fee as required by 35 U.S.C. 371(c)(1), and an executed declaration as required by 35 U.S.C. 371(c)(4).

The declaration is signed by Vera STEINHAEUSER as heir/legal representative to deceased inventor Frank STEINHAEUSER.

DISCUSSION

The declaration is unacceptable at this time because it is not clear that Vera STEINHAEUSER is the sole heir or just the legal representative for the deceased inventor, Frank STEINHAEUSER. (see MPEP § 409.01(a)).

That is, there may be other heirs who are required to also sign the declaration. The declaration must indicate that she is the sole heir for the deceased inventor or is the legal representative (not including the term heir next to it so as to avoid confusion) for the deceased inventor, Frank STEINHAEUSER, to accept the application under 37 CFR 1.42.

In addition, the declaration did not satisfy 37 CFR §1.497(b)(2) because it does not state the citizenship, residence, and mailing address of both the heir(s) and the deceased inventor as required.

If Vera STEINHAEUSER has been appointed as the legal representative for the deceased inventor, 37 C.F.R. §1.497(b)(2) indicates that "[i]f the person making the oath or the declaration or any supplemental or oath or declaration is not the inventor (§§1.42, 1.43, or 1.47), the oath or declaration shall state the relationship of the person to the inventor, and, upon information and belief, the facts which the inventor would have been required to state (the inventors citizenship and so on). If the person signing the oath or declaration is the legal representative of a deceased inventor, the oath or declaration shall also state that the person is a legal representative and the citizenship, residence and mailing address of the legal representative." (see MPEP § 409.01)

In this instance, it is unclear if the residence and citizenship is of the deceased inventor or legal representative. If it is of the deceased inventor then the residence and citizenship of the legal representative have not been provided as required under 37 C.F.R. §1.497(b)(2).

CONCLUSION

For the above reasons, the request for status under 37 CFR 1.42 is **not accepted**.

If reconsideration on the merits of this petition is desired, a proper reply must be filed within TWO (2) MONTHS from the mail date of this decision. Failure to respond will result in the abandonment of the application. Any reconsideration request should include a cover letter entitled "Renewed Request Under 37 CFR 1.42." Extensions of time are available under 37 CFR 1.136(a).

Any further correspondence with respect to this matter should be addressed to the Mail Stop PCT, Commissioner for Patents, Office of PCT Legal Administration, P.O. Box 1450, Alexandria, Virginia 22313-1450, with the contents of the letter marked to the attention of the office of PCT Legal Administration.

Rafael Bacares
PCT Legal Examiner
PCT Legal Office
Tel: (571) 272-3276
Fax: (571) 273-0459

#5

UNITED STATES PATENT and TRADEMARK OFFICE

COMMISSIONER FOR PATENTS
UNITED STATES PATENT AND TRADEMARK OFFICE
P.O BOX 1450
ALEXANDRIA, VA 22313-1450
www.uspto.gov

31 JAN 2006

Gerald H. Kiel, Esq.
Reed Smith LLP
599 Lexington Avenue
New York, NY 10022-7650

In re Application of	:	DECISION ON
GRIEBEL et al	:	
PCT No.: PCT/DE2003/003637	:	
Application No.: 10/535601	:	PAPERS FILED
Int. Filing Date: 29 October 2003	:	
Priority Date: 19 November 2002	:	
Attorney's Docket No.: 026418	:	UNDER 37 CFR 1.42
For: METHOD FOR THE INTRODUCTION OF AN	:	
INTEGRATED ... EXPANSIVE BODY	:	

This is in response to the "RENEWED PETITION UNCER 37 CFR 1.42" filed 19 December 2005.

BACKGROUND

In a decision from this office dated 18 October 2005, the declaration filed on 19 May 2005 was not accepted under 37 CFR 1.42. The declaration was unacceptable because it was not clear that Vera STEINHAEUSER is the sole heir or just the legal representative for the deceased inventor, Frank STEINHAEUSER.

On 19 December 2005, applicants submitted the renewed submission under 37 C.F.R. §1.42.

DISCUSSION

Applicants have provided an executed declaration, which sets forth that Vera STEINHAEUSER as heir/legal representative of Frank STEINHAEUSER. Again, it is unclear if she is the sole heir because the declaration lists her as an heir, if she is the sole heir then it should be stated as such. Moreover, she signed the declaration as she was the fourth-joint inventor of the current patent application. That is, currently the current executed declaration describes her as the fourth-joint inventor but based on applicants' comments it appears that she is only the legal representative of Mr. Frank STEINHAEUSER. Thus, the declaration is improperly executed.

CONCLUSION

For the above reasons, the request for status under 37 CFR 1.42 is **not accepted**.

If reconsideration on the merits of this petition is desired, a proper reply must be filed within TWO (2) MONTHS from the mail date of this decision. Failure to respond will result in the abandonment of the application. Any reconsideration request should include a cover letter entitled "Second Renewed Request Under 37 CFR 1.42." Extensions of time are available under 37 CFR 1.136(a).

Any further correspondence with respect to this matter should be addressed to the Mail Stop PCT, Commissioner for Patents, Office of PCT Legal Administration, P.O. Box 1450, Alexandria, Virginia 22313-1450, with the contents of the letter marked to the attention of the office of PCT Legal Administration.

Rafael Bacares
PCT Legal Examiner
PCT Legal Office
Tel: (571) 272-3276
Fax: (571) 273-0459

08 JUN 2006

UNITED STATES PATENT and TRADEMARK OFFICE

COMMISSIONER FOR PATENTS
UNITED STATES PATENT AND TRADEMARK OFFICE
P.O BOX 1450
ALEXANDRIA, VA 22313-1450
www.uspto.gov

Gerald H. Kiel, Esq.
Reed Smith LLP
599 Lexington Avenue
New York, NY 10022-7650

In re Application of	:	DECISION ON RENEWED
GRIEBEL et al	:	
PCT No.: PCT/DE2003/003637	:	
Application No.: 10/535,601	:	
Int. Filing Date: 29 October 2003	:	PAPERS FILED
Priority Date: 19 November 2002	:	
Attorney's Docket No.: 026418	:	
For: METHOD FOR THE INTRODUCTION OF AN	:	
INTEGRATED ... EXPANSIVE BODY	:	UNDER 37 CFR 1.42

This is a decision on the papers filed 31 March 2006, which has been treated as a second renewed request for status under 37 CFR 1.42.

BACKGROUND

In a decision from this Office on 31 January 2006, the request filed on 18 December 2001 was dismissed. The decision stated that declaration was improperly executed.

On 31 March 2006, applicants filed the present renewed submission under 37 CFR § 1.42 accompanied with a new executed declaration.

DISCUSSION

The renewed submission includes, a newly executed declaration signed by Vera STEINHAEUSER as Legal Representative of the deceased inventor (Frank STEINHAEUSER) and the declaration sets forth the residence, citizenship and mailing addresses of both the deceased inventor and the legal representative. The declaration, also, has the signature of the other three co-inventors. Accordingly, applicants have satisfied the requirements under 37 CFR 1.42.

CONCLUSION

The renewed submission filed under 37 CFR 1.42 is **ACCEPTED**.

This application is being forwarded to the National Stage Processing Branch of the Office of PCT Operations for continue processing and indicating a date of **31 March 2006** under 35 U.S.C. 371 (c)(1), (c)(2) and (c)(4).

Rafael Bacares
PCT Legal Examiner
PCT Legal Office
Tel: (571) 272-3276
Fax: (571) 273-0459

UNITED STATES PATENT AND TRADEMARK OFFICE

UNITED STATES DEPARTMENT OF COMMERCE
United States Patent and Trademark Office
Address: COMMISSIONER FOR PATENTS
P.O. Box 1450
Alexandria, Virginia 22313-1450
www.uspto.gov

KENYON & KENYON LLP
ONE BROADWAY
NEW YORK, NY 10004

Mail Date: 04/21/2010

Applicant	: Tooru Inaguma	: DECISION ON REQUEST FOR
Patent Number	: 7601672	: RECALCULATION of PATENT
Issue Date	: 10/13/2009	: TERM ADJUSTMENT IN VIEW
Appliction No	: 10/535,602	: OF WYETH AND NOTICE OF INTENT TO
Filed	: 12/12/2005	: ISSUE CERTIFICATE OF CORRECTION
		:

The Request for Recalculation is **GRANTED** to the extent indicated.

The patent term adjustment has been determined to be **235** days. The USPTO will *sua sponte* issue a certificate of correction reflecting the amount of PTA days determined by the recalculation.

Prior to the issuance of the certificate of correction, the USPTO will afford patentee an opportunity to be heard and request reconsideration. Accordingly, patentee has **one month or thirty (30) days**, whichever is longer, to file a request for reconsideration of this patent term adjustment calculation. See 35 U.S.C. 154(b)(3)(B)(ii) and 37 CFR 1.322(a)(4). No extensions of time will be granted under 37 CFR 1.136.

Patentee should use document code PET.OP if electronically filing a request for reconsideration of this patent term adjustment calculation. The patentee must also include the information required by 37 CFR 1.705(b)(2) and the fee required by 37 CFR 1.18(e). If patentee does not file a timely request for reconsideration of this patent term adjustment calculation including the information required by 37 CFR 1.705(b)(2) and the fee required by 37 CFR 1.18(e), the USPTO will issue a certificate of correction reflecting the PTA determination noted above.

Patentee should be aware that in order to preserve the right to review in the United States District Court for the District of Columbia of the USPTO patent term adjustment determination, patentee must ensure that he or she also take the steps required under 35 U.S.C. 154(b)(4)(A) in a timely manner. Nothing in the request for recalculation should be construed as providing an alternative time frame for commencing a civil action under 35 U.S.C. 154(b)(4)(A).

Any questions concerning this decision should be directed to the Office of Patent Legal Administration at 571-272-7702.

UNITED STATES PATENT AND TRADEMARK OFFICE

Commissioner for Patents
United States Patent and Trademark Office
P.O. Box 1450
Alexandria, VA 22313-1450
www.uspto.gov

02 APR 2007

SALIWANCHIK LLOYD & SALIWANCHIK
A PROFESSIONAL ASSOCIATION
PO BOX 142950
GAINESVILLE FL 32614-2950

In re Application of	:	
BATHURST et al.	:	
Application No.: 10/535,609	:	DECISION
PCT No.: PCT/GB2003/005049	:	
Int. Filing Date: 20 November 2003	:	
Priority Date: 20 November 2002	:	
Attorney Docket No.: GJE-7631	:	
For: COMPOSITION AND METHOD FOR	:	
TREATING INFLAMMATORY DISEASES	:	
USING PROTEASE INHIBITORS	:	

This is a decision on applicants' petition under 37 CFR 1.47(a) filed 12 June 2006 in the United States Patent and Trademark Office (USPTO). The petition is **DISMISSED** without prejudice.

BACKGROUND

On 20 November 2003, applicants filed international application PCT/GB2003/005049, which designated the United States and claimed a priority date of 20 November 2002. A copy of the international application was communicated from the International Bureau to the USPTO on 03 June 2004. The thirty-month period for paying the basic national fee in the United States expired at midnight on 20 May 2005.

On 19 May 2005, applicants filed a submission for entry into the national stage in the United States which was accompanied by, *inter alia*, the U.S. Basic National Fee.

On 09 December 2005, the United States Designated/Elected Office (DO/EO/US) mailed a NOTIFICATION OF MISSING REQUIREMENTS UNDER 35 U.S.C. 371 (Form PCT/DO/EO/905) indicating, *inter alia*, that an oath or declaration of the inventors in compliance with 37 CFR 1.497(a)-(b) and the surcharge under 37 CFR 1.492(h) for filing any of the search fee, the examination fee, or the oath or declaration after the date of the commencement of the national stage were required.

On 12 June 2006, applicants filed a petition under 37 CFR 1.47(a) which was accompanied by, *inter alia*, a petition/fee for a four month extension of time, the surcharge under 37 CFR 1.492(h), and a declaration of inventors.

DISCUSSION

A petition under 37 CFR 1.47(a) must be accompanied by: (1) the fee under 37 CFR 1.17(h); (2) factual proof that the missing joint inventor refuses to execute the application or cannot be reached after diligent effort; (3) a statement of the last known address of the missing inventor; and (4) an oath or declaration by each 37 CFR 1.47(a) applicant on his or her own behalf and on behalf of the non-signing joint inventor.

As to item (1), the petition fee is $200. The balance of $70 has been charged to Deposit Account 19-0065. Thus, item (1) has been met.

Item (4) has been met as well.

Item (3) has not been met. A statement of the last known address of each of the four non-signing joint inventors has not been provided.

Item (2) has not been met. MPEP § 409.03(d), item I states in part:

> Where inability to find or reach a nonsigning inventor "after diligent effort" is the reason for filing under 37 CFR 1.47, a statement of facts should be submitted that fully describes the exact facts which are relied on to establish that a diligent effort was made.
>
> . . .
>
> The statement of facts must be signed, where at all possible, by a person having firsthand knowledge of the facts recited therein. Statements based on hearsay will not normally be accepted. Copies of documentary evidence such as internet searches, certified mail return receipts, cover letters of instructions, telegrams, that support a finding that the nonsigning inventor could not be found or reached should be made part of the statement. The steps taken to locate the whereabouts of the nonsigning inventor should be included >in the< statement of facts. It is important that the statement contain facts as opposed to conclusions.

Here, no statement of facts has been provided. A statement of facts by a person having firsthand knowledge of the facts recited therein must be provided. For example, a statement of facts by the person or persons who sent the letters accompanying the petition and a statement of facts by the person or persons who sent and/or received the e-mails accompanying the petition must be provided.

Additionally, it is not clear whether it is being alleged that the four non-signing inventors refuse to execute the application or that they cannot be reached after diligent effort. The two are distinct. *See, e.g.,* MPEP 409.03(d), item I. "Inventor Cannot Be Reached" and item II. "Refusal to Join."

-If it is being alleged that one or more of the non-signing inventors refuses to sign, the inventor or inventors must be presented with a complete copy of the application papers (specification, including claims, drawing, and oath or declaration) for a refusal to be established.

-If it is being alleged that one or more of the non-signing inventors cannot be reached or found, copies of documentary evidence such as *internet searches*, certified mail return receipts, cover

letters of instructions, and telegrams, that support a finding that the non-signing inventor or inventors could not be found or reached should be made part of the affidavit or declaration. See MPEP § 409.03, item I.

CONCLUSION

For the above reasons, applicants' petition under 37 CFR 1.47(a) is **DISMISSED** without prejudice.

If reconsideration on the merits of this petition is desired, a proper response must be filed within TWO (2) MONTHS from the mail date of this decision. **Failure to timely file the proper response will result in abandonment of this application.** Any reconsideration request should include a cover letter entitled "Renewed Petition Under 37 CFR 1.47(a)". No additional petition fee is required. Extensions of time may be obtained under 37 CFR 1.136(a).

Please direct further correspondence with respect to this matter to Mail Stop PCT, Commissioner for Patents, Office of PCT Legal Administration, P.O. Box 1450, Alexandria, Virginia 22313-1450, with the contents of the letter marked to the attention of the Office of PCT Legal Administration.

Daniel Stemmer
Legal Examiner
PCT Legal Affairs
Office of Patent Cooperation Treaty
Legal Administration
Telephone: (571) 272-3301
Facsimile: (571) 273-0459

0 3 JAN 2008

UNITED STATES PATENT AND TRADEMARK OFFICE

Commissioner for Patents
United States Patent and Trademark Office
P.O. Box 1450
Alexandria, VA 22313-1450
www.uspto.gov

SALIWANCHIK LLOYD & SALIWANCHIK
A PROFESSIONAL ASSOCIATION
PO BOX 142950
GAINESVILLE FL 32614-2950

In re Application of	:	
BATHURST et al.	:	
Application No.: 10/535,609	:	DECISION
PCT No.: PCT/GB2003/005049	:	
Int. Filing Date: 20 November 2003	:	
Priority Date: 20 November 2002	:	
Attorney Docket No.: GJE-7631	:	
For: COMPOSITION AND METHOD FOR	:	
TREATING INFLAMMATORY DISEASES	:	
USING PROTEASE INHIBITORS	:	

This is a decision on applicants' renewed petition under 37 CFR 1.47(a) filed 02 November 2007 in the United States Patent and Trademark Office (USPTO). The petition is **DISMISSED** as **MOOT**.

BACKGROUND

On 20 November 2003, applicants filed international application PCT/GB2003/005049, which designated the United States and claimed a priority date of 20 November 2002. A copy of the international application was communicated from the International Bureau to the USPTO on 03 June 2004. The thirty-month period for paying the basic national fee in the United States expired at midnight on 20 May 2005.

On 19 May 2005, applicants filed a submission for entry into the national stage in the United States which was accompanied by, *inter alia*, the U.S. Basic National Fee.

On 09 December 2005, the United States Designated/Elected Office (DO/EO/US) mailed a NOTIFICATION OF MISSING REQUIREMENTS UNDER 35 U.S.C. 371 (Form PCT/DO/EO/905) indicating, *inter alia*, that an oath or declaration of the inventors in compliance with 37 CFR 1.497(a)-(b) and the surcharge under 37 CFR 1.492(h) for filing any of the search fee, the examination fee, or the oath or declaration after the date of the commencement of the national stage were required.

On 12 June 2006, applicants filed a petition under 37 CFR 1.47(a) which was accompanied by, *inter alia*, a petition/fee for a four month extension of time, the surcharge under

37 CFR 1.492(h), and two declarations of inventors.

On 02 April 2007, a decision was mailed dismissing applicants' petition under 37 CFR 1.47(a) without prejudice for failing to provide factual proof that the missing joint inventors refuse to execute the application or cannot be reached after diligent effort and for failing to provide a statement of the last known addresses of the missing inventors.

On 02 November 2007, applicants filed the instant renewed petition under 37 CFR 1.47(a) which was accompanied by, *inter alia*, a petition/fee for a five month extension of time and four declaration of inventors.

DISCUSSION

Since a 37 CFR 1.497 declaration has been executed by all the joint inventors, the petition for status under 37 CFR 1.47(a) is moot. The application need not be returned to the Office of PCT Legal Affairs for any further consideration of the status under 37 CFR 1.47 and no such status should be indicated on this application file.

The declarations of inventors filed 12 June 2006 and 02 November 2007 are in compliance with 37 CFR 1.497(a)-(b).

CONCLUSION

For the above reasons, applicants' petition under 37 CFR 1.47(a) is **DISMISSED** as **MOOT**.

This application is being forwarded to the National Stage Processing Branch of the Office of PCT Operations to continue national stage processing of the application.

/Daniel Stemmer/

Daniel Stemmer
Legal Examiner
PCT Legal Affairs
Office of Patent Cooperation Treaty
Legal Administration
Telephone: (571) 272-3301
Facsimile: (571) 273-0459

UNITED STATES PATENT AND TRADEMARK OFFICE

Commissioner for Patents
United States Patent and Trademark Office
P.O. Box 1450
Alexandria, VA 22313-1450
www.uspto.gov

MORRISON & FOERSTER LLP
755 PAGE MILL RD
PALO ALTO CA 94304-1018

COPY MAILED

JAN 0 5 2007

OFFICE OF PETITIONS

In re Application of	:	
Abdullah I. Haj-yehia	:	
Application No. 10/535,620	:	DECISION ON PETITION
Filed: November 21, 2003	:	TO WITHDRAW
Attorney Docket No. 254082000600	:	FROM RECORD
	:	

This is a decision on the Request to Withdraw as attorney or agent of record under 37 C.F.R. § 1.36(b), filed October 21, 2006.

The request is **DISMISSED** as moot.

A review of the file record indicates that the power of attorney to Morrison & Foerster, LLP has been revoked by the assignee of the patent application on November 16, 2006. Accordingly, the request to withdraw under 37 C.F.R. § 1.36(b) is moot.

All future communications from the Office will continue to be directed to the below-listed address until otherwise notified by applicant.

Telephone inquires concerning this decision should be directed to undersigned at 571-272-1642.

April M. Wise
Petitions Examiner
Office of Petitions

cc: MR. KEVIN D. MCCARTHY
ROACH BROWN MCCARTHY & GRUBER, P.C.
1620 LIBERTY BUILDING
420 MAIN STREET
BUFFALO, NY 14202-3616

08 JUN 2006

#4

UNITED STATES PATENT AND TRADEMARK OFFICE

Commissioner for Patents
United States Patent and Trademark Office
P.O. Box 1450
Alexandria, VA 22313-1450
www.uspto.gov

22428
FOLEY & LARDNER
300o K Street NW, Suite 3800
Washington, DC 20007

In re Application of	:	
TRAN *et al*	:	
U.S. Application No.: 10/535,635	:	
PCT No.: PCT/US2003/038178	:	
Int. Filing Date: 25 November 2003	:	**DECISION**
Priority Date: 26 November 2002	:	
Attorney Docket No.: 039386-2269	:	
For: IMMUNE RESPONSE-ASSOCIATED	:	
PROTEINS	:	

This decision is in response to applicants' "Petition Under 37 C.F.R. §1.47(a) - Nainder K. Chawla" filed 02 March 2006.

BACKGROUND

On 05 December 2005, the DO/EO/US mailed a Notification of Missing Requirements Under 35 U.S.C. 371 (Form PCT/DO/EO/905) indicating that an oath or declaration in compliance with 37 CFR 1.497(a) and (b) and a surcharge fee was required. Applicants were given two months to respond with extensions of time available.

On 02 March 2006, applicants filed the instant petition which was accompanied by, *inter alia*, the petition fee; a one-month extension and fee; the surcharge fee; a declaration; copies of two letters; and copies of FedEx postal delivery results.

DISCUSSION

A petition under 37 CFR 1.47(a) requires: (1) the petition fee; (2) factual proof that the missing joint inventor cannot be located or refuses to cooperate; (3) a statement of the last known address of the nonsigning joint inventor; (4) and an oath or declaration executed by the signing joint inventor on their behalf and on behalf of the nonsigning joint inventor.

Concerning item (1), the $200.00 petition fee has been paid.

With regards to item (3), the last known address of Narinder K. Chawla-Walis is listed as:

33 Union Square # 417
Union City, CA 94587

Concerning item (4), the 37 CFR 1.47(a) applicant submitted a declaration signed by fourteen of the fifteen named inventors on their own behalf and on behalf of the nonsigning joint inventor. This declaration meets the requirements of section 409.03(a) and is in compliance with 37 CFR 1.497(a) and (b).

Items (1), (3) and (4) of 37 CFR 1.47(a) are satisfied.

Regarding item (2), the 37 CFR 1.47(a) applicant claims that the nonsigning inventor "is refusing to join in the subject application by executing the Declaration. Further, Ms. Chawla-Walia is now unable to be located." These allegations will be discussed, in turn.

Section 409.03(d) of the MPEP discusses a refusal by an inventor to cooperate and states, in part:

> A refusal by an inventor to sign an oath or declaration when the inventor has not been presented with the application papers does not itself suggest that the inventor is refusing to join the application unless it is clear that the inventor understands exactly what he or she is being asked to sign and refuses to accept the application papers. A copy of the application papers should be sent to the last known address of the nonsigning inventor, or, if the nonsigning inventor is represented by counsel, to the address of the nonsigning inventor's attorney . . .
>
> Where a refusal of the inventor to sign the application papers is alleged, the circumstances of the presentation of the application papers and of the refusal must be specified in a statement of facts by the person who presented the inventor with the application papers and/or to whom the refusal was made.
>
> When it is concluded by the 37 CFR 1.47 applicant that a nonsigning inventor's conduct constitutes a refusal, all facts upon which that conclusion is based should be stated in the statement of facts in support of the petition or directly in the petition. If there is documentary evidence to support facts alleged in the petition or in any statement of facts, such evidence should be submitted.

Petitioners claim that Christine Arthur, a legal assistant of counsel, talked to the nonsigning inventor on 07 September 2005 about the documents mailed 31 May 2005.

Ms. Chawla-Walia told Ms. Arthur that she needed another copy of the documents as the documents mailed 31 May 2005 were misplaced during a move. A duplicate set of documents were sent that day. But FedEx delivery records show that these documents were delivered to an address other than the recipient.

Ms. Arthur called the nonsigning inventor again on 14 November 2005 and was told that the documents were never received. Petitioners sent more documents to the new address on 16 November 2005 and delivery records indicate that they were delivered. Ms. Chawla-Walia did not respond to the deadline of 01 December 2005 and subsequent telephone calls by Ms. Arthur indicate that the phone has been disconnected.

A review of the letter dated 16 November 2005 shows that only a Declaration and Assignment were included. There is no indication that a copy of the subject application was included. While the cover letter dated 31 May 2005 did state that a copy of the international application was included, the facts as described in the petition suggest that the nonsigning inventor had misplaced these papers. Moreover, the statements in the petition are complete hearsay. An affidavit by the person with direct knowledge of the conversations (Ms. Arthur) is required. For these two reasons, a refusal to cooperate has not been shown.

Section 409.03(d) of the MPEP also discusses situations where an inventor cannot be reached and states, in part:

> The statement of facts must be signed, where at all possible, by a person having firsthand knowledge of the facts recited therein. Statements based on hearsay will not normally be accepted. Copies of documentary evidence such as internet searches, certified mail return receipts, cover letters of instructions, telegrams, that support a finding that the nonsigning inventor could not be found or reached should be made part of the statement. The steps taken to locate the whereabouts of the nonsigning inventor should be included in the statement of facts. It is important that the statement contain facts as opposed to conclusions.

Petitioners have not made a showing that a diligent effort was made to locate the nonsigning inventor. There is no indication that any search was performed. No documentary evidence of searches was submitted. Moreover, a statement of facts by the person having firsthand knowledge of the facts (Ms. Arthur) is also required. For these reasons, petitioners have not made an acceptable showing of diligent effort to locate the nonsigning inventor.

For the reasons discussed above, item (2) is not yet satisfied.

CONCLUSION

Applicants' petition under 37 CFR 1.47(a) is **DISMISSED** without prejudice.

If reconsideration on the merits of this petition is desired, a proper response must be filed within **TWO (2) MONTHS** from the mail date of this decision. No additional petition fee is required.

Any further correspondence with respect to this matter deposited with the United States Postal Service should be addressed to the Mail Stop PCT, Commissioner for Patents, Office of PCT Legal Administration, P.O. Box 1450, Alexandria, Virginia 22313-1450, with the contents of the letter marked to the attention of the Office of PCT Legal Administration.

James Thomson

James Thomson
Attorney Advisor
Office of PCT Legal Administration

Tel.: (571) 272-3302

#6

UNITED STATES PATENT AND TRADEMARK OFFICE

Commissioner for Patents
United States Patent and Trademark Office
P.O. Box 1450
Alexandria, VA 22313-1450
www.uspto.gov

21 SEP 2006

22428
FOLEY & LARDNER
3000 K Street NW, Suite 3800
Washington, DC 20007

In re Application of :
TRAN *et al* :
U.S. Application No.: 10/535,635 :
PCT No.: PCT/US2003/038178 :
Int. Filing Date: 25 November 2003 : **DECISION**
Priority Date: 26 November 2002 :
Attorney Docket No.: 039386-2269 :
For: IMMUNE RESPONSE-ASSOCIATED :
PROTEINS :

This is a decision on the papers filed 02 August 2006.

BACKGROUND

On 08 June 2006, a decision dismissing applicants' petition under 37 CR 1.47(a) was mailed. Applicants were given two months to respond.

On 02 August 2006, applicants responded by providing a declaration executed by the nonsigning inventor.

DISCUSSION

In response to the decision mailed 08 June 2006, petitioners included a declaration signed by the nonsigning inventor, Narinder K. Chawla. Petitioners previously submitted a declaration executed by the other fourteen named inventors.

A review of the declaration shows that it complies with 37 CFR 1.497(a) and (b).

No further action on the petition under 37 CFR 1.47(a) is required.

CONCLUSION

Accordingly, the petition under 37 CFR 1.47(a) is **DISMISSED** as **MOOT**.

Applicants have completed the requirements for acceptance under 35 U.S.C. 371(c). The application has an international filing date of 25 November 2003 under 35

10/535,565

U.S.C. 363 and a 35 U.S.C. 371(c)(1), (c)(2) and (c)(4) date of 02 August 2006.

This application is being forwarded to the National Stage Processing Division of the Office of PCT Operations for continued processing.

James Thomson

James Thomson
Attorney Advisor
Office of PCT Legal Administration

Tel.: (571) 272-3302

0 7 NOV 2007

UNITED STATES PATENT AND TRADEMARK OFFICE

Commissioner for Patents
United States Patent and Trademark Office
P.O. Box 1450
Alexandria, VA 22313-1450
www.uspto.gov

PHILIPS INTELLECTUAL PROPERTY & STANDARDS
P.O. BOX 3001
BRIARCLIFF MANOR NY 10510

In re Application of	:	
KELLY, et al.	:	
Application No.: 10/535,637	:	DECISION ON PETITION
PCT No.: PCT/IB03/05285	:	
Int. Filing Date: 27 November 2003	:	UNDER 37 CFR 1.10
Priority Date: 13 December 2002	:	
Attorney Docket No.: CN 020017	:	
For: METHOD AND SYSTEM FOR LINKING LEGACY DVD DISKS TO RELATED WEB SITES	:	

This decision is in response to applicant's correspondence filed 29 August 2006. The correspondence is being treated as a petition under 37 CFR 1.10 to accord a filing date of 20 May 2005 and issue a corrected filing receipt.

BACKGROUND

On 20 May 2005, applicants filed a request to enter into the national stage under 35 U.S.C. 371 along with the appropriate basic national filing fee. No declaration was filed.

On 01 November 2005, a Notification of Missing Requirements (Form PCT/DO/EO/905) was mailed to applicants indicating that an oath or declaration was required.

On 23 November 2005, applicants filed their response to the Notification of Missing Requirements which included an executed declaration of the inventors.

On 17 March 2006, a Notification of Acceptance (Form PCT/DO/EO/903) was issued identifying the 35 U.S.C. 371(c)(1), (c)(2) and (c)(4) dates, as well as the completion of all 35 U.S.C. 371 dates as 23 November 2005. Subsequently, an Official Filing Receipt was issued indicating a "FILING DATE" of 23 November 2005.

On 29 August 2006, applicants filed the present petition urging that the Filing Receipt be corrected to indicate a filing date of 20 May 2005, rather than 23 November 2005.

DISCUSSION

The actual filing date of the present application is considered to be the international filing date, 27 November 2003. The date in the filing date portion on the filing receipt of a national stage application is the date upon which the requirements set forth in 35 U.S.C. 371(c) for entry

into the national stage were completed. (See MPEP §1895.01) A review of the application file reveals that the declaration was filed with the USPTO on 23 November 2005, the date which the requirements set forth in 35 U.S.C. 371(c) for entry into the national stage were completed. Therefore, the correction of the "FILING DATE" on the filing receipt to indicate a date of 20 May 2005 is not proper since applicants completed the requirements set forth in 35 U.S.C. 371(c) on 23 November 2005. (Note MPEP section 1893.03(b)).

CONCLUSION

Applicant's petition under 37 CFR 1.10 to accord a filing date of 20 May 2005 is **DISMISSED**.

The application will be forwarded to United States Designated/Elected Office for processing in accordance with this decision. Thereafter, it will be returned to Art Unit 2611 for further prosecution.

Derek A. Putonen
Attorney Advisor
Office of PCT Legal Administration
Tel: (571) 272-3294
Fax: (571) 273-0459

UNITED STATES PATENT AND TRADEMARK OFFICE

Commissioner for Patents
United States Patent and Trademark Office
P.O. Box 1450
Alexandria, VA 22313-1450
www.uspto.gov

JJGJr : 12-07

FRIEDRICH KUEFFNER
317 MADISON AVENUE, SUITE 910
NEW YORK NY 10017

COPY MAILED
DEC 10 2007
OFFICE OF PETITIONS

In re Application of	:	
Brockhoff	:	
Application No. 10/535,648	:	DECISION
Filed: 27 December, 2005	:	
Attorney Docket No. BU-13PCT	:	

This is a decision on the petition filed on 3 October, 2007, and considered as a request to withdraw the holding of abandonment under 37 C.F.R. §1.181.

The petition as considered under 37 C.F.R. §1.181 is **GRANTED**.

BACKGROUND

The record reflects that:

- Petitioner failed to reply timely and properly to the non-final Office action mailed on 14 March, 2007, with reply due absent extension of time on or before 14 June, 2007;
- the application went abandoned after midnight 14 June, 2007;
- the Office mailed the Notice of Abandonment 21 September, 2007;
- on 3 October, 2007, Petitioner filed the instant petition with, *inter alia*, an averment that a reply in the form of an amendment was filed on 17 September, 2007, over a 12 September, 2007, certificate of mailing, with request and fee for extension of time (which fee was charged), and Petitioner made such showings with copies of documents (including the reply and the date-stamped ("SEPT 17 2007") receipt card (see: MPEP

'503[1]) and of the reply and made such statements of Petitioner's own knowledge as set forth in the guidance in the Commentary at MEEP §711.03(c).

The availability of applications and application papers online to applicants/practitioners who diligently associate their Customer Number with the respective application(s) now provides an applicant/practitioner on-demand information as to events/transactions in an application. Thus, now if one wishes to know the progress in and/or status of an application or the accuracy of the data therein, one need only look at the file online.

Out of an abundance of caution, Petitioners always are reminded that the filing of a petition under 37 C.F.R. §1.181 does not toll any periods that may be running any action by the Office and a petition seeking relief under the regulation must be filed within two (2) months of the act complained of (see: 37 C.F.R. §1.181(f)), and that those registered to practice and all others who make representations before the Office are reminded to inquire into the underlying facts of representations made to the Office and support averments with the appropriate documentation– since all owe to the Office the continuing duty to disclose.[2]

---

[1] MPEP '503 provides in pertinent part:

'503 Application Number and Filing Receipt

* * *

A return postcard should be attached to *each* patent application for which a receipt is desired. It is important that the return postcard itemize all of the components of the application. If the postcard does not itemize each of the components of the application, it will not serve as evidence that any component which was not itemized was received by the United States Patent and Trademark Office (USPTO). It should be recognized that the identification of an application by application number does not necessarily signify that the USPTO has accepted the application as complete (37 C.F.R. '1.53(a)).

* * *

RETURN POSTCARD

If a receipt of any item (e.g., paper or fee) filed in the USPTO is desired, it may be obtained by enclosing with the paper a self-addressed postcard specifically identifying the item. The USPTO will stamp the receipt date on the postcard and place it in the outgoing mail. A postcard receipt which itemizes and properly identifies the items which are being filed serves as *prima facie* evidence of receipt in the USPTO of all the items listed thereon on the date stamped thereon by the USPTO.

The identifying data on the postcard should be so complete as to clearly identify the item for which receipt is requested. For example, the postcard should identify the applicant=s name, application number (if known), confirmation number (if known), filing date, interference number, title of the invention, etc. The postcard should also identify the type of paper being filed, e.g., new application, affidavit, amendment, notice of appeal, appeal brief, drawings, fees, motions, supplemental oath or declaration, petition, etc., and the number of pages being submitted. If a new application is being filed, all parts of the application being submitted should be separately listed on the postcard, e.g., the number of pages of specification (including written description, claims and abstract), number of claims, number of sheets of drawings, number of pages of oath/declaration, number of pages of cover sheet (provisional application).

The postcard receipt will not serve as *prima facie* evidence of receipt of any item which is not adequately itemized on the postcard. For example, merely listing on the postcard Aa complete application@ or Apatent application@ will not serve as a proper receipt for each of the required components of an application (e.g., specification (including claims), drawings (if necessary), oath or declaration and the application filing fee) or missing portions (e.g., pages, sheets of drawings) of an application if one of the components or portion of a component is found to be missing by the USPTO. Each separate component should be specifically and properly itemized on the postcard. Furthermore, merely incorporating by reference in the postcard receipt, the items listed in a transmittal letter will not serve as *prima facie* evidence of receipt of those items.

The person receiving the item(s) in the USPTO will check the listing on the postcard against the item(s) being filed to be sure they are properly identified and that all the items listed on the postcard are presently being submitted to the USPTO. If any of the items listed on the postcard are not being submitted to the USPTO, those items will be crossed off and the post-card initialed by the person receiving the items. Upon return of a postcard receipt from the USPTO, the postcard receipt should be promptly reviewed by the person who filed the items to ensure that every item specifically denoted on the postcard was received by the USPTO. If the postcard receipt has been annotated to indicate that a particular item denoted on the postcard was not received by the USPTO, the postcard receipt will not serve as *prima facie* evidence of receipt of that item in the USPTO. (Emphasis supplied.)

[2] See supplement of 17 June, 1999. The Patent and Trademark Office is relying on petitioner's duty of candor and good faith and accepting a statement made by Petitioner. See Changes to Patent Practice and Procedure, 62 Fed. Reg. at 53160 and 53178, 1203 Off. Gaz. Pat. Office at 88 and 103 (responses to comments 64 and 109)(applicant obligated under 37 C.F.R. §10.18 to inquire into the underlying facts and circumstances when providing statements to the Patent and Trademark Office).

STATUTES, REGULATIONS AND ANALYSIS

Congress has authorized the Commissioner to "revive an application if the delay is shown to the satisfaction of the Commissioner to have been "unavoidable." 35 U.S.C. §133 (1994).[3]

The regulations at 37 C.F.R. §1.137(a) and (b) set forth the requirements for a petitioner to revive a previously unavoidably or unintentionally, respectively, abandoned application under this congressional grant of authority.

The language of 35 U.S.C. §133 and 37 C.F.R. §1.137(a) is clear, unambiguous, and without qualification: the delay in tendering the reply to the outstanding Office action, as well as filing the first petition seeking revival, must have been unavoidable for the reply now to be accepted on petition.[4]

Specifically, the regulations at 37 C.F.R. §10.18 provide:

§ 10.18 Signature and certificate for correspondence filed in the Patent and Trademark Office.
(a) For all documents filed in the Office in patent, trademark, and other non-patent matters, except for correspondence that is required to be signed by the applicant or party, each piece of correspondence filed by a practitioner in the Patent and Trademark Office must bear a signature by such practitioner complying with the provisions of §1.4(d), §1.4(e), or § 2.193(c)(1) of this chapter.
(b) By presenting to the Office (whether by signing, filing, submitting, or later advocating) any paper, the party presenting such paper, whether a practitioner or non-practitioner, is certifying that—

(1) All statements made therein of the party's own knowledge are true, all statements made therein on information and belief are believed to be true, and all statements made therein are made with the knowledge that whoever, in any matter within the jurisdiction of the Patent and Trademark Office, knowingly and willfully falsifies, conceals, or covers up by any trick, scheme, or device a material fact, or makes any false, fictitious or fraudulent statements or representations, or makes or uses any false writing or document knowing the same to contain any false, fictitious or fraudulent statement or entry, shall be subject to the penalties set forth under 18 U.S.C. 1001, and that violations of this paragraph may jeopardize the validity of the application or document, or the validity or enforceability of any patent, trademark registration, or certificate resulting therefrom; and

(2) To the best of the party's knowledge, information and belief, formed after an inquiry reasonable under the circumstances, that —

(i) The paper is not being presented for any improper purpose, such as to harass someone or to cause unnecessary delay or needless increase in the cost of prosecution before the Office;

(ii) The claims and other legal contentions therein are warranted by existing law or by a nonfrivolous argument for the extension, modification, or reversal of existing law or the establishment of new law;

(iii) The allegations and other factual contentions have evidentiary support or, if specifically so identified, are likely to have evidentiary support after a reasonable opportunity for further investigation or discovery; and

(iv) The denials of factual contentions are warranted on the evidence, or if specifically so identified, are reasonably based on a lack of information or belief.

(c) Violations of paragraph (b)(1) of this section by a practitioner or non-practitioner may jeopardize the validity of the application or document, or the validity or enforceability of any patent, trademark registration, or certificate resulting therefrom. Violations of any of paragraphs (b)(2)(i) through (iv) of this section are, after notice and reasonable opportunity to respond, subject to such sanctions as deemed appropriate by the Commissioner, or the Commissioner's designee, which may include, but are not limited to, any combination of —

(1) Holding certain facts to have been established;
(2) Returning papers;
(3) Precluding a party from filing a paper, or presenting or contesting an issue;
(4) Imposing a monetary sanction;
(5) Requiring a terminal disclaimer for the period of the delay; or
(6) Terminating the proceedings in the Patent and Trademark Office.

(d) Any practitioner violating the provisions of this section may also be subject to disciplinary action. See § 10.23(c)(15).
[Added 50 FR 5175, Feb. 6, 1985, effective Mar. 8, 1985; para. (a) revised, 58 FR 54494, Oct. 22, 1993, effective Nov. 22, 1993; paras. (a) & (b) revised, paras. (c) & (d) added, 62 FR 53131, Oct. 10, 1997, effective Dec. 1, 1997; para. (a) revised, 69 FR 56481, Sept. 21, 2004, effective Oct. 21, 2004]

[3] 35 U.S.C. §133 provides:
35 U.S.C. §133 Time for prosecuting application.
Upon failure of the applicant to prosecute the application within six months after any action therein, of which notice has been given or mailed to the applicant, or within such shorter time, not less than thirty days, as fixed by the Commissioner in such action, the application shall be regarded as abandoned by the parties thereto, unless it be shown to the satisfaction of the Commissioner that such delay was unavoidable.

Delays in responding properly raise the question whether delays are unavoidable.[4] Where there is a question whether the delay was unavoidable, Petitioners must meet the burden of establishing that the delay was unavoidable within the meaning of 35 U.S.C. §133 and 37 C.F.R. §1.137(a).[5]

And the Petitioner must be diligent in attending to the matter.[6] Failure to do so does not constitute the care required under Pratt, and so cannot satisfy the test for diligence and due care.

(By contrast, unintentional delays are those that do not satisfy the very strict statutory and regulatory requirements of unavoidable delay, and also, by definition, are not intentional.[7]))

Allegations as to the Request to
Withdraw the Holding of Abandonment

The courts have determined the construct for properly supporting a petition seeking withdrawal of a holding of abandonment.[8]

The commentary at MPEP §711.03(c) provides in pertinent part:

* * *

> **B. Petition To Withdraw Holding of Abandonment Based on Evidence That a Reply Was Timely Mailed or Filed**
>
> 37 C.F.R. §1.10(c) through §1.10(e) and §1.10(g) set forth procedures for petitioning the Director of the USPTO to accord a filing date to correspondence as of the date of deposit of the correspondence as "Express Mail." A petition to withdraw the holding of abandonment relying upon a timely reply placed in "Express Mail" must include an appropriate petition under 37 C.F.R. §1.10(c), (d), * (e), or (g) (see MPEP § 513). When a paper

---

[4] See: *Changes to Patent Practice and Procedure*; *Final Rule Notice*, 62 *Fed. Reg.* at 53158-59 (October 10, 1997), 1203 *Off. Gaz. Pat. Office* at 86-87 (October 21, 1997).

[5] See: In re Application of G, 11 USPQ2d 1378, 1380 (Comm'r Pats. 1989).

[6] See: Diligence in Filing Petitions to Revive and Petitions to Withdraw the Holding of Abandonment, 1124 Off. Gaz. Pat. Office 33 (March 19, 1991). It was and is Petitioner's burden to exercise diligence in seeking either to have the holding of abandonment withdrawn or the application revived. See 1124 Off. Gaz. Pat. Office supra.

[7] Therefore, by example, an unintentional delay in the reply might occur if the reply and transmittal form are to be prepared for shipment by the US Postal Service, but other pressing matters distract one's attention and the mail is not timely deposited for shipment.

[8] See: Delgar v. Schulyer, 172 USPQ 513 (D.D.C. 1971).

is shown to have been mailed to the Office using the "Express Mail" procedures, the paper must be entered in PALM with the "Express Mail" date.

Similarly, applicants may establish that a reply was filed with a postcard receipt that properly identifies the reply and provides *prima facie* evidence that the reply was timely filed. See MPEP § 503. For example, if the application has been held abandoned for failure to file a reply to a first Office action, and applicant has a postcard receipt showing that an amendment was timely filed in response to the Office action, then the holding of abandonment should be withdrawn upon the filing of a petition to withdraw the holding of abandonment. When the reply is shown to have been timely filed based on a postcard receipt, the reply must be entered into PALM using the date of receipt of the reply as shown on the post card receipt.

Where a certificate of mailing under 37 C.F.R. §1.8, but not a postcard receipt, is relied upon in a petition to withdraw the holding of abandonment, see 37 C.F.R. §1.8(b) and MPEP § 512. As stated in 37 C.F.R §1.8(b)(3) the statement that attests to the previous timely mailing or transmission of the correspondence must be on a personal knowledge basis, or to the satisfaction of the Director of the USPTO. If the statement attesting to the previous timely mailing is not made by the person who signed the Certificate of Mailing (i.e., there is no personal knowledge basis), then the statement attesting to the previous timely mailing should include evidence that supports the conclusion that the correspondence was actually mailed (e.g., copies of a mailing log establishing that correspondence was mailed for that application). When the correspondence is shown to have been timely filed based on a certificate of mailing, the correspondence is entered into PALM with the actual date of receipt (i.e., the date that the duplicate copy of the papers was filed with the statement under 37 C.F.R. §1.8).

37 C.F.R. §1.8(b) also permits applicant to notify the Office of a previous mailing or transmission of correspondence and submit a statement under 37 C.F.R. 1.8(b)(3) accompanied by a duplicate copy of the correspondence when a reasonable amount of time (e.g., more than one month) has elapsed from the time of mailing or transmitting of the correspondence. Applicant does not have to wait until the application becomes abandoned before notifying the Office of the previous mailing or transmission of the correspondence. Applicant should check the private Patent

> Application Information Retrieval (PAIR) system for the status of the correspondence before notifying the Office. See MPEP § 512.
>
> * * *

And the regulation requires that relief be sought within two (2) months of the act complained of.

Petitioner appears to have satisfied the showing requirements herein.

CONCLUSION

Petitioner appears to have satisfied the burdens herein, and the petition as considered under 37 C.F.R. §1.181 is **granted** and the 21 September, 2007, Notice of Abandonment is **vacated**.

The instant application is released to Technology Center 3600 for further processing in due course.

While telephone inquiries regarding this decision may be directed to the undersigned at (571) 272-3214, it is noted that all practice before the Office is in writing (see: 37 C.F.R. §1.2[9]) and the proper authority for action on any matter in this regard are the statutes (35 U.S.C.), regulations (37 C.F.R.) and the commentary on policy (MPEP). Therefore, no telephone discussion may be controlling or considered authority for Petitioner's action(s).

John J. Gillon, Jr.
Senior Attorney
Office of Petitions

---

[9] The regulations at 37 C.F.R. §1.2 provide:
§1.2 Business to be transacted in writing.
All business with the Patent and Trademark Office should be transacted in writing. The personal attendance of applicants or their attorneys or agents at the Patent and Trademark Office is unnecessary. The action of the Patent and Trademark Office will be based exclusively on the written record in the Office. No attention will be paid to any alleged oral promise, stipulation, or understanding in relation to which there is disagreement or doubt.

#5

UNITED STATES PATENT AND TRADEMARK OFFICE

Commissioner for Patents
United States Patent and Trademark Office
P.O. Box 1450
Alexandria, VA 22313-1450
www.uspto.gov

05 JAN 2006

JACOBSON HOLMAN PLLC
400 7th Street, N.W., Suite 600
Washington, DC 20004

In re Application of
AYGEN, Sitke
U.S. Application No.: 10/535,655
PCT No.: PCT/EP03/12515
Int. Filing Date: 10 November 2003
Priority Date: 12 November 2002
Attorney Docket No.: P70594US0
For: METHOD FOR MEASURING THE METABOLISM OF THE PANCREAS

DECISION ON PETITION FOR REVIVAL UNDER 37 CFR 1.137(b)

Applicant's "Petition for Revival of an International Application for Patent Designating the U.S. Abandoned Unintentionally Under 37 CFR 1.137(b)" filed with the national stage papers on 19 May 2005 is hereby **GRANTED** as follows:

The basic national fee, surcharge fee and petition fee have been paid. Applicant's statement in the petition meets the requirements of 37 CFR 1.137(b)(3). A terminal disclaimer is not required. Accordingly, all requirements under 37 CFR 1.137(b) have been satisfied.

An executed declaration in compliance with 37 CFR 1.497(a) and (b) was submitted on 16 August 2005. The processing fee of $130.00 for furnishing the English translation later than 30 months pursuant to 37 CFR 1.492(f) has been charged to Deposit Account No. 06-1358 as authorized.

Applicant has completed the requirements for acceptance under 35 U.S.C. 371(c). The application has an international filing date of 10 November 2003, under 35 U.S.C. 363 and a 35 U.S.C. 371(c)(1), (c)(2) and (c)(4) date of 16 August 2005.

This application is being forwarded to the National Stage Processing Division of the Office of PCT Operations for continued processing.

James Thomson

James Thomson
Attorney Advisor
Office of PCT Legal Administration

Tel.: (571) 272-3302

UNITED STATES PATENT AND TRADEMARK OFFICE

Commissioner for Patents
United States Patent and Trademark Office
P.O. Box 1450
Alexandria, VA 22313-1450
www.uspto.gov

JACOBSON HOLMAN PLLC
400 SEVENTH STREET N.W.
SUITE 600
WASHINGTON DC 20004

MAILED

JUN 0 8 2009

OFFICE OF PETITIONS

In re Application of	:	
Sitke AYGEN	:	
Application No. 10/535,655	:	DECISION ON PETITION
Filed: August 16, 2005	:	
Attorney Docket No. **P70594US0**	:	

This is a decision on the petition under the unintentional provisions of 37 CFR 1.137(b), filed April 13, 2009, to revive the above-identified application.

The petition is **GRANTED**.

The application became abandoned for failure to timely reply within the meaning of 37 CFR 1.113 to the final Office action, mailed September 09, 2008, which set a shortened statutory period for reply of three (3) months. A two (2) month extension of time under the provisions of 37 CFR 1.136(a) was obtained. Accordingly, the application became abandoned on February 10, 2009.

The petition satisfies the requirements of 37 CFR 1.137(b) in that petitioner has supplied (1) the reply in the form of a Request for Continued Examination (RCE) and fee of $405.00, and the submission required by 37 CFR 1.114; (2) the petition fee of $810.00; and (3) a proper statement of unintentional delay. Accordingly, the reply to the final Office action of September 09, 2008 is accepted as having been unintentionally delayed.

Telephone inquiries concerning this decision should be directed to the undersigned at (571) 272-4231.

This application is being referred to Technology Center AU 3735 for processing of the RCE and for appropriate action by the Examiner in the normal course of business on the amendment submitted in accordance with 37 CFR 1.114.

Michelle R. Eason

Michelle R. Eason
Paralegal Specialist
Office of Petition

UNITED STATES PATENT AND TRADEMARK OFFICE

UNITED STATES DEPARTMENT OF COMMERCE
United States Patent and Trademark Office
Address: COMMISSIONER FOR PATENTS
P.O. Box 1450
Alexandria, Virginia 22313-1450
www.uspto.gov

BACON & THOMAS, PLLC
625 SLATERS LANE
FOURTH FLOOR
ALEXANDRIA, VA 22314-1176

Mail Date: 05/19/2010

Applicant	: Thomas Froehlich	: DECISION ON REQUEST FOR
Patent Number	: 7620505	: RECALCULATION of PATENT
Issue Date	: 11/17/2009	: TERM ADJUSTMENT IN VIEW
Application No	: 10/535,674	: OF WYETH AND NOTICE OF INTENT TO
Filed	: 05/22/2006	: ISSUE CERTIFICATE OF CORRECTION
		:

The Request for Recalculation is **GRANTED** to the extent indicated.

The patent term adjustment has been determined to be **380** days. The USPTO will *sua sponte* issue a certificate of correction reflecting the amount of PTA days determined by the recalculation.

Prior to the issuance of the certificate of correction, the USPTO will afford patentee an opportunity to be heard and request reconsideration. Accordingly, patentee has **one month or thirty (30) days**, whichever is longer, to file a request for reconsideration of this patent term adjustment calculation. See 35 U.S.C. 154(b)(3)(B)(ii) and 37 CFR 1.322(a)(4). No extensions of time will be granted under 37 CFR 1.136.

Patentee should use document code PET.OP if electronically filing a request for reconsideration of this patent term adjustment calculation. The patentee must also include the information required by 37 CFR 1.705(b)(2) and the fee required by 37 CFR 1.18(e). If patentee does not file a timely request for reconsideration of this patent term adjustment calculation including the information required by 37 CFR 1.705(b)(2) and the fee required by 37 CFR 1.18(e), the USPTO will issue a certificate of correction reflecting the PTA determination noted above.

Patentee should be aware that in order to preserve the right to review in the United States District Court for the District of Columbia of the USPTO patent term adjustment determination, patentee must ensure that he or she also take the steps required under 35 U.S.C. 154(b)(4)(A) in a timely manner. Nothing in the request for recalculation should be construed as providing an alternative time frame for commencing a civil action under 35 U.S.C. 154(b)(4)(A).

Any questions concerning this decision should be directed to the Office of Patent Legal Administration at 571-272-7702.

UNITED STATES PATENT AND TRADEMARK OFFICE

COMMISSIONER FOR PATENTS
UNITED STATES PATENT AND TRADEMARK OFFICE
P.O. BOX 1450
ALEXANDRIA, VA 22313-1450
www.uspto.gov

GlaxoSmithKline
GLOBAL PATENTS -US, UW2220
P. O. BOX 1539
KING OF PRUSSIA PA 19406-0939

MAILED
JUN 08 2010
OFFICE OF PETITIONS

In re Application of :
Hasegawa, et al. : DECISION ON PETITION
Application No. 10/535,690 :
Filed: April 10, 2006 :
Atty. Dkt. No.: TC00001 :

This is a decision on the petition under 37 CFR 1.137(b), filed March 3, 2010.

The petition is **GRANTED**.

This application became abandoned January 22, 2010 for failure to timely reply to the Notice of Allowance and Issue Fee Due (Notice) mailed October 21, 2009. The Notice set a three (3) month statutory period of time for reply. Notice of Abandonment was mailed February 5, 2010.

A grantable petition under 37 CFR 1.137(b) must be accompanied by: (1) the required reply, unless previously filed; (2) the petition fee as set forth in 37 CFR 1.17(m); (3) a statement that the entire delay in filing the required reply from the due date for the reply until the filing of a grantable petition pursuant to 37 CFR 1.137(b) was unintentional; and (4) any terminal disclaimer (and fee as set forth in 37 CFR 1.20(d)) required by 37 CFR 1.137(d). Where there is a question as to whether either the abandonment or the delay in filing a petition under 37 CFR 1.137 was unintentional, the Director may require additional information. See MPEP 711.03(c)(II)(C) and (D).

The instant petition has been carefully reviewed and found in compliance with the requirements set forth above.

The file does not indicate a change of address has been submitted, although the address given on the petition differs from the address of record. If appropriate, a change of address should be filed in accordance with MPEP 601.03. A courtesy copy of this decision is being mailed to the address given on the petition; however, the Office will mail all future correspondence solely to the address of record.

In view thereof, this application is being forwarded to the Office of Data Management for further processing.

Telephone inquiries concerning this matter may be directed to the undersigned at (571) 272-3205.

/ALESIA M. BROWN/

Alesia M. Brown
Petitions Attorney
Office of Petitions

CC: WAYNE DUSTMAN
Glazosmithkline CORP
709 Swedeland Rd
P O Box 1539
King Of Prussia, PA 19406

UNITED STATES PATENT AND TRADEMARK OFFICE

Commissioner for Patents
United States Patent and Trademark Office
P.O. Box 1450
Alexandria, VA 22313-1450
www.uspto.gov

VOLPE AND KOENIG, P.C.
UNITED PLAZA, SUITE 1600
30 SOUTH 17TH STREET
PHILADELPHIA PA 19103

COPY MAILED

MAY 14 2008

OFFICE OF PETITIONS

In re Application of	:	
Thomas Matzler et al.	:	
Application No. 10/535,694	:	ON PETITION
Filed: May 19, 2005	:	
Attorney Docket No. SFS-PT061 (P0372US)	:	

This is a decision on the petition under the unintentional provisions of 37 CFR 1.137(b) filed August 8, 2007, to revive the above-identified application.

The petition is **GRANTED**.

The application became abandoned for failure to timely file a reply within the meaning of 37 CFR 1.113 to the final Office action of December 13, 2006. The proposed reply required for consideration of a petition to revive must be a Notice of Appeal (and appeal fee required by 37 CFR 41.20(b)(2), an amendment that *prima facie* places the application in condition for allowance, a Request for Continued Examination and submission (37 CFR 1.114), or the filing of a continuing application under 37 CFR 1.53(b). See MPEP 711.03(c)(III)(A)(2). A one (1) month extension of time pursuant to the provisions of 37 CFR 1.136(a) were obtained. Accordingly, the date of abandonment of this application is April 14, 2007.. The Notice of Abandonment was mailed August 6, 2007.

The petition satisfies the requirements of 37 CFR 1.137(b) in that petitioner has supplied (1) the reply in the form of a Request for Continued Examination (RCE) and fee of $790, and the submission required by 37 CFR 1.114; (2) the petition fee of $1,500; and (3) a proper statement of unintentional delay.

Telephone inquiries concerning this decision should be directed to Terri Williams at (571) 272-2991.

This application is being referred to Technology Center AU 3677 for processing of the RCE and for appropriate action by the Examiner in the normal course of business on the amendment submitted in accordance with 37 CFR 1.114.

Liana Walsh
Petitions Examiner
Office of Petitions

18 OCT 2005

#3

UNITED STATES PATENT AND TRADEMARK OFFICE

Commissioner for Patents
United States Patent and Trademark Office
P.O. Box 1450
Alexandria, VA 22313-1450
www.uspto.gov

Brian H. Batzli
Merchant & Gould P.C.
P.O. Box 2903
Minneapolis, MN 55402-0903

In re Application of SMITH Application No.: 10/535,712 PCT No.: PCT/ZA03/00134 Int. Filing Date: 12 September 2003 Priority Date: 12 September 2002 Attorney Docket No.: 14638.0005USWO For: FLUID FLOW ACTUATED DRIVE MEANS	:	DECISION ON PETITION UNDER 37 CFR 1.137(b)

The petition to revive under 37 CFR 1.137(b) filed 20 May 2005 in the above-captioned application is hereby **GRANTED** as follows:

Applicant's statement that "the entire delay in filing the required reply from the due date for the reply until the filing of a grantable petition under 37 CFR 1.137(b) was unintentional" meets the requirements of 37 CFR 1.137(b)(3).

A review of the application file reveals that applicant has submitted the basic national fee and the requirements of 37 CFR 1.137(b) have been satisfied. Therefore, the request to revive the application abandoned under 35 U.S.C. 371(d) is granted as to the National stage in the United States of America.

This application is being forwarded to the United States Designated/Elected Office (US/DO/EO) for continued processing including the issuance of a Notification of Missing Requirements (Form PCT/DO/EO/905) indicating that an oath or declaration along with the $65 surcharge for filing the oath or declaration after the thirty-month period is required.

Anthony Smith

Anthony Smith
Attorney-Advisor
Office of PCT Legal Administration
Telephone: 571-272-3298
Fax: 571-273-0459

12 MAY 2006

UNITED STATES PATENT AND TRADEMARK OFFICE

Commissioner for Patents
United States Patent and Trademark Office
P.O. Box 1450
Alexandria, VA 22313-1450
www.uspto.gov

BROWN, RAYSMAN, MILLSTEIN, FELDER & STEINER LLP
900 THIRD AVENUE
NEW YORK, NY 10022

In re Application of	:	
HONG, Zhi	:	
Application No.: 10/535,742	:	DECISION ON
PCT App. No.: PCT/US02/31556	:	
Int'l Filing Date: 02 October 2002	:	PETITION
Priority Date: 17 January 2002	:	
Attorney Docket No.: 6319-4016	:	UNDER 37 CFR 1.137(b)
For: SUGAR MODIFIED ... REPLICATION	:	
INHIBITORS	:	

Applicant's "Renewed Petition Under 37 C.F.R. 1.137(b)," filed in the above-captioned application on 19 May 2005 is **GRANTED**.

Applicant states "the entire delay in filing the required reply from the due date for the required reply until the filing of a grantable petition under 37 CFR 1.137(b) was unintentional," as required by 37 CFR 1.137(b)(3). The appropriate national fee has been paid. The petition fee paid in application 11/035,792 has been applied to this application. A terminal disclaimer is not required as the application was filed on or after 08 June 1995. Accordingly, all requirements under 37 CFR 1.137(b) have been satisfied.

A signed oath or declaration has not yet been submitted.

This application is being forwarded to the National Stage Processing Branch of the Office of PCT Operations for continued processing in accordance with this decision, including the mailing of a Notification of Missing Requirements (Form PCT/DO/EO/905) indicating that an oath or declaration in compliance with 37 CFR 1.497(a)-(b) and the surcharge for late filing of the oath or declaration are required.

Erin P. Thomson

Erin P. Thomson
Attorney Advisor
PCT Legal Administration

Telephone: (571) 272-3292
Facsimile: (571) 273-0459

3 1 DEC 2007

UNITED STATES PATENT AND TRADEMARK OFFICE

Commissioner for Patents
United States Patent and Trademark Office
P.O. Box 1450
Alexandria, VA 22313-1450
www.uspto.gov

THELEN REID BROWN RAYSMAN & STEINER LLP
PO BOX 1510
NEW YORK, NY 10150-1510

In re Application of	:	
HONG, Zhi	:	
Application No.: 10/535,742	:	
PCT App. No.: PCT/US02/31556	:	
Int'l Filing Date: 02 October 2002	:	DECISION
Priority Date: 17 January 2002	:	
Attorney Docket No.: 6319-4016	:	
For: SUGAR MODIFIED ... REPLICATION	:	
INHIBITORS	:	

This is in response to attorney's request to withdraw as attorneys of record, filed 26 October 2007, requesting permission to withdraw as agents of record in regard to 10/535,742. Request is **GRANTED**.

As set forth in 37 CFR 1.36, a registered attorney or agent may withdraw, upon application to and approval by the Commissioner, so long as sufficient time remains for applicant to respond to any pending action. In the present case, the request to withdraw filed 26 October 2007, is signed by James P. Demers, on behalf of the attorneys associated with customer number 29858.

Currently no action is required on this application within the next 30 days, so the requirement of "at least 30 days between *approval* of withdrawal and the later of the expiration date of a time period for reply or the expiration date of the period which can be obtained by a petition and fee for extension of time under 37 CFR 1.136(a)," is satisfied.

For the reasons above, the request to withdraw as agents of record is **GRANTED** as to the attorneys associated with customer number 29858.

A copy of this communication and all future communication will be directed to the address associated with customer number 41552: MCDERMOTT, WILL & EMERY, 4370 LA JOLLA VILLAGE DRIVE, SUITE 700, SAN DIEGO, CA 92122.

/Erin P. Thomson/

Erin P. Thomson
Attorney Advisor
PCT Legal Administration

Telephone: 571-272-3292
Facsimile: 571-273-0459

cc: MCDERMOTT, WILL & EMERY
4370 LA JOLLA VILLAGE DRIVE, SUITE 700
SAN DIEGO CA 92122

UNITED STATES PATENT AND TRADEMARK OFFICE

Commissioner for Patents
United States Patent and Trademark Office
P.O. Box 1450
Alexandria, VA 22313-1450
www.uspto.gov

MAILED

FEB 01 2010

OFFICE OF PETITIONS

Deborah Neville
P.O. Box 61063
Palo Alto, CA 94306

In re Application of	:	
Dan Bertil Duroj	:	
Application No. 10/535,743	:	DECISION ON PETITION
Filed: May 20, 2005	:	TO WITHDRAW
	:	FROM RECORD
	:	

This is a decision on the Request to Withdraw as attorney or agent of record under 37 C.F.R. § 1.36(b), filed November 12, 2009.

The request is **APPROVED**.

A grantable request to withdraw as attorney/agent of record must be signed by every attorney/agent seeking to withdraw or contain a clear indication that one attorney is signing on behalf of another/others. A request to withdraw will not be approved unless at least 30 (thirty) days would remain between the date of approval and the later of the expiration date of a time to file a response or the expiration date of the maximum time period which can be extended under 37 C.F.R. § 1.136(a).

The request was signed by Deborah Neville on behalf of all attorneys of record. All attorneys/agents have been withdrawn. Applicant is reminded that there is no attorney of record at this time.

All future correspondence will be directed to the first named inventor Dan Bertil Duroj at the address indicated below.

Telephone inquiries concerning this decision should be directed to Terri Johnson at 571-272-2991.

Terri Johnson
Petitions Examiner
Office of Petitions

cc: **Dan Duros**
Attn: Dr. Ludwig Brann Patentbyra: AB
c/o Box 171 92 SE-104 62
Stockholm, Sweden

UNITED STATES PATENT AND TRADEMARK OFFICE

UNITED STATES DEPARTMENT OF COMMERCE
United States Patent and Trademark Office
Address: COMMISSIONER FOR PATENTS
P.O. Box 1450
Alexandria, Virginia 22313-1450
www.uspto.gov

APPLICATION NUMBER	FILING OR 371(C) DATE	FIRST NAMED APPLICANT	ATTY. DOCKET NO./TITLE
10/535,743	05/20/2005	Dan Bertil Duroj	

CONFIRMATION NO. 9645

POWER OF ATTORNEY NOTICE

Deborah Neville
PO Box 61063
Palo Alto, CA 94306

OC000000039953987

Date Mailed: 02/01/2010

NOTICE REGARDING CHANGE OF POWER OF ATTORNEY

This is in response to the Power of Attorney filed 11/12/2009.

- The withdrawal as attorney in this application has been accepted. Future correspondence will be mailed to the new address of record. 37 CFR 1.33.

/tsjohnson/

Office of Data Management, Application Assistance Unit (571) 272-4000, or (571) 272-4200, or 1-888-786-0101

UNITED STATES PATENT AND TRADEMARK OFFICE

Commissioner for Patents
United States Patent and Trademark Office
P.O. Box 1450
Alexandria, VA 22313-1450
www.uspto.gov

SCOTT R. COX
LYNCH, COX, GILMAN & MAHAN, P.S.C.
500 WEST JEFFERSON STREET
SUITE 2100
LOUISVILLE KY 40202

COPY MAILED

DEC 1 8 2009

OFFICE OF PETITIONS

In re Application of	:	
Inge Kramer, et al.	:	
Application No. 10/535,767	:	DECISION GRANTING PETITION
Filed: November 8, 2005	:	UNDER 37 CFR 1.313(c)(2)
Attorney Docket No. P-1259	:	

This is a decision on the petition under 37 CFR 1.313(c)(2), filed, December 17, 2009 to withdraw the above-identified application from issue after payment of the issue fee.

The petition is **GRANTED**.

The above-identified application is withdrawn from issue for consideration of a submission under 37 CFR 1.114 (request for continued examination). *See* 37 CFR 1.313(c)(2).

Petitioner is advised that the issue fee paid on November 17, 2009 cannot be refunded. If, however, this application is again allowed, petitioner may request that it be applied towards the issue fee required by the new Notice of Allowance.[1]

Telephone inquiries should be directed to Terri Johnson at (571) 272-2991.

This application is being referred to Technology Center AU 1796 for processing of the request for continued examination under 37 CFR 1.114 and for consideration of the concurrently filed amendment.

Terri Johnson
Petitions Examiner
Office of Petitions

---

[1] *The request to apply the issue fee to the new Notice may be satisfied by completing and returning the new Part B – Fee(s) Transmittal Form (along with any balance due at the time of submission). Petitioner is advised that the Issue Fee Transmittal Form* ***must*** *be completed and timely submitted to avoid abandonment of the application.*

UNITED STATES PATENT AND TRADEMARK OFFICE

Commissioner for Patents
United States Patent and Trademark Office
P.O. Box 1450
Alexandria, VA 22313-1450
www.uspto.gov

ROGER PITT
KIRKPATRICK & LOCKHART NICHOLSON GRAHAM LLP
599 LEXINGTON AVENUE
33RD FLOOR
NEW YORK NY 10022-6030

COPY MAILED

AUG 2 1 2006

OFFICE OF PETITIONS

In re Application of	:	
Chaabane, et al.	:	
Application No. 10/535,798	:	DECISION ON PETITION
Filed: January 6, 2006	:	TO WITHDRAW
Attorney Docket No. CHAABANE	:	FROM RECORD
	:	

This is a decision on the Request to Withdraw as attorney or agent of record under 37 C.F.R. § 1.36(b), filed April 24, 2006.

The request is **NOT APPROVED**.

A grantable request to withdraw as attorney/agent of record must be signed by every attorney/agent seeking to withdraw or contain a clear indication that one attorney is signing on behalf of another/others. A request to withdraw will not be approved unless at least 30 (thirty) days would remain between the date of approval and the later of the expiration date of a time to file a response or the expiration date of the maximum time period which can be extended under 37 C.F.R. § 1.136(a).

The Office cannot approve the request at this time since the reasons provided do not meet any of the conditions under the mandatory or permissive categories enumerated in 37 CFR 10.40. Section 10.40 of Title 37 of the Code of Federal Regulation states, "[a] practitioner shall not withdraw from employment in a proceeding before the Office without permission from the Office[.]" More specifically, 37 CFR 10.40 states, "[i]f paragraph (b) of this section is not applicable, a practitioner may not request permission to withdraw in matter pending before the Office unless such request or such withdrawal is" for one the permissive reasons listed in 37 CFR 10.40(c). The reasons set forth in the request, "the attached copy of written instructions from an overseas representative of the assignee ", does not meet any the conditions set forth in 37 CFR 10.40.

In order to request or take action in a patent matter, the assignee must establish its ownership of the patent to the satisfaction of the Director. In this regard, a Statement under 37 CFR 3.73(b) must have either: (i) documentary evidence of a chain of title from the original owner to the

assignee (*e.g.*, copy of an executed assignment), and a statement affirming that the documentary evidence of the chain of title from the original owner to the assignee was or concurrently is being submitted for recordation pursuant to § 3.11; or (ii) a statement specifying where documentary evidence of a chain of title from the original owner to the assignee is recorded in the assignment records of the Office (*e.g.*, reel and frame number).

All future communications from the Office will continue to be directed to the above-listed address until otherwise notified by applicant.

Telephone inquiries concerning this decision should be directed to April Wise at 571-272-1642.

David Bucci
Petitions Examiner
Office of Petitions

cc: Anthony H. Handal, ESQ.
Brown, Rudnick, Berlack & Israels, LLP
Seven Times Square
New York, NY 10036

UNITED STATES PATENT AND TRADEMARK OFFICE

Commissioner for Patents
United States Patent and Trademark Office
P.O. Box 1450
Alexandria, VA 22313-1450
www.uspto.gov

17 JUL 2006

Pearl Cohen Zedek. LLP
1500 Broadway, 12th Floor
New York, New York 10036

In re Application of	:	
ALBAG, et al.	:	
Application No.: 10/535,822	:	
PCT No.: PCT/IL02/00932	:	DECISION ON REQUEST
Int. Filing Date: 21 November 2002	:	
Priority Date: None	:	
Attorney Docket No.: P-7650-US	:	
For: APPARATUS, SYSTEM AND METHOD FOR THE TRANSMISSION OF A DYNAMIC BANDWIDTH SIGNAL ACROSS A CATV NETWORK		

This decision is in response to applicants' "Response to Notification of Defective Response" filed 06 March 2006 notifying the Office that the correct spelling of the first and third inventor's name is Yechzkel Albag and Yishaiahu Strull as indicated on the declaration rather than Yechzkel Albeg and Yeshayahu Strull as indicated on the published international application. Applicants' request has been treated under 37 CFR 1.181. No petition fee is due.

Petitioner states that "the discrepancy between the names of the first and third inventors indicated in the international application during the international phase and the names of the inventors as appear in the declaration is the results of a typographical error." As indicated in Section 201.03 of the Manual of Patent Examining Procedure, where a typographical or transliteration error in the spelling of an inventor's name is discovered, a petition under 37 CFR 1.48(a) is not required. Accordingly, applicants' explanation of the difference in the spelling of the first and third inventor's inventor's name is accepted and noted for the record.

For the reasons above, the request is **GRANTED**.

This application is being forwarded to United States Designated/Elected Office for further processing and for review of the national stage papers submitted 22 September 2005.

Anthony Smith
Attorney-Advisor
Office of PCT Legal Administration
Tel: (571) 272-3298
Fax: (571) 273-0459

30 MAR 2006

UNITED STATES PATENT AND TRADEMARK OFFICE

Commissioner for Patents
United States Patent and Trademark Office
P.O. Box 1450
Alexandria, VA 22313-1450
www.uspto.gov

J. Ernest Kenney
Bacon and Thomas
625 Slaters Lane, 4th Floor
Alexandria, VA 22314

In re Application of	:	
MHATRE	:	DECISION ON PETITION
Application No.: 10/535,847	:	
PCT No.: PCT/IN02/00201	:	UNDER 37 CFR 1.137(b)
Int. Filing Date: 07 October 2002	:	
Priority Date: 07 October 2002	:	
Atty. Docket No.: MHAT3002/JEK	:	
For: A NEW 3-CONE DIFFUSER	:	

The petition to revive under 37 CFR 1.137(b) filed 20 May 2005 in the above-captioned application is hereby **GRANTED** as follows:

Applicant's statement that "the entire delay in filing the required reply from the due date for the required reply until the filing of a grantable petition under 37 CFR 1.137(b) was unintentional" and the prompt filing of the petition satisfies the requirement of 37 CFR 1.137(b)(3).

A review of the application file reveals that applicant has now provided payment of the full, U.S. Basic National Fee. Therefore, the request to revive the application abandoned under 35 U.S.C. 371(d) is granted as to the National stage in the United States of America. Further, a review of the application file reveals that all of the requirements of 35 U.S.C. 371 for entry into the national stage in the United States have been satisfied.

The application has an international filing date of 07 October 2002 under 35 U.S.C. 363 and will be given a date of **20 May 2005** under 35 U.S.C. 371(c)(1), (c)(2) and (c)(4).

This application is being returned to the United States Designated/Elected Office (DO/EO/US) for treatment in accordance with this decision.

Derek A. Putonen
Attorney Advisor
Office of PCT Legal Administration
Tel: (571) 272-3294
Fax: (571) 273-0459

UNITED STATES PATENT AND TRADEMARK OFFICE

UNITED STATES DEPARTMENT OF COMMERCE
United States Patent and Trademark Office
Address: COMMISSIONER FOR PATENTS
P.O. Box 1450
Alexandria, Virginia 22313-1450
www.uspto.gov

BACON & THOMAS, PLLC
625 SLATERS LANE
FOURTH FLOOR
ALEXANDRIA, VA 22314-1176

Mail Date: 07/28/2010

Applicant	: Ramesh Nana Mhatre	: DECISION ON REQUEST FOR
Patent Number	: 7662036	: RECALCULATION of PATENT
Issue Date	: 02/16/2010	: TERM ADJUSTMENT IN VIEW
Application No	: 10/535,847	: OF WYETH AND NOTICE OF INTENT TO
Filed	: 05/20/2005	: ISSUE CERTIFICATE OF CORRECTION
		:

The Request for Recalculation is **GRANTED** to the extent indicated.

The patent term adjustment has been determined to be **1215** days. The USPTO will *sua sponte* issue a certificate of correction reflecting the amount of PTA days determined by the recalculation.

Prior to the issuance of the certificate of correction, the USPTO will afford patentee an opportunity to be heard and request reconsideration. Accordingly, patentee has **one month or thirty (30) days**, whichever is longer, to file a request for reconsideration of this patent term adjustment calculation. See 35 U.S.C. 154(b)(3)(B)(ii) and 37 CFR 1.322(a)(4). No extensions of time will be granted under 37 CFR 1.136.

Patentee should use document code PET.OP if electronically filing a request for reconsideration of this patent term adjustment calculation. The patentee must also include the information required by 37 CFR 1.705(b)(2) and the fee required by 37 CFR 1.18(e). If patentee does not file a timely request for reconsideration of this patent term adjustment calculation including the information required by 37 CFR 1.705(b)(2) and the fee required by 37 CFR 1.18(e), the USPTO will issue a certificate of correction reflecting the PTA determination noted above.

Patentee should be aware that in order to preserve the right to review in the United States District Court for the District of Columbia of the USPTO patent term adjustment determination, patentee must ensure that he or she also take the steps required under 35 U.S.C. 154(b)(4)(A) in a timely manner. Nothing in the request for recalculation should be construed as providing an alternative time frame for commencing a civil action under 35 U.S.C. 154(b)(4)(A).

Any questions concerning this decision should be directed to the Office of Patent Legal Administration at 571-272-7702.

UNITED STATES PATENT AND TRADEMARK OFFICE

UNITED STATES DEPARTMENT OF COMMERCE
United States Patent and Trademark Office
Address: COMMISSIONER FOR PATENTS
P.O. Box 1450
Alexandria, Virginia 22313-1450
www.uspto.gov

Huawei Technologies Co., Ltd.
c/o LEASON ELLIS
81 Main Street, Suite 503
White Plains, NY 10601

Mail Date: 04/30/2010

Applicant	: Hongxing Zhang	: DECISION ON REQUEST FOR
Patent Number	: 7660240	: RECALCULATION of PATENT
Issue Date	: 02/09/2010	: TERM ADJUSTMENT IN VIEW
Application No	: 10/535,858	: OF WYETH AND NOTICE OF INTENT TO
Filed	: 02/03/2006	: ISSUE CERTIFICATE OF CORRECTION
		:

The Request for Recalculation is **GRANTED** to the extent indicated.

The patent term adjustment has been determined to be **1034** days. The USPTO will *sua sponte* issue a certificate of correction reflecting the amount of PTA days determined by the recalculation.

Prior to the issuance of the certificate of correction, the USPTO will afford patentee an opportunity to be heard and request reconsideration. Accordingly, patentee has **one month or thirty (30) days**, whichever is longer, to file a request for reconsideration of this patent term adjustment calculation. See 35 U.S.C. 154(b)(3)(B)(ii) and 37 CFR 1.322(a)(4). No extensions of time will be granted under 37 CFR 1.136.

Patentee should use document code PET.OP if electronically filing a request for reconsideration of this patent term adjustment calculation. The patentee must also include the information required by 37 CFR 1.705(b)(2) and the fee required by 37 CFR 1.18(e). If patentee does not file a timely request for reconsideration of this patent term adjustment calculation including the information required by 37 CFR 1.705(b)(2) and the fee required by 37 CFR 1.18(e), the USPTO will issue a certificate of correction reflecting the PTA determination noted above.

Patentee should be aware that in order to preserve the right to review in the United States District Court for the District of Columbia of the USPTO patent term adjustment determination, patentee must ensure that he or she also take the steps required under 35 U.S.C. 154(b)(4)(A) in a timely manner. Nothing in the request for recalculation should be construed as providing an alternative time frame for commencing a civil action under 35 U.S.C. 154(b)(4)(A).

Any questions concerning this decision should be directed to the Office of Patent Legal Administration at 571-272-7702.

23 MAY 2006

#5

UNITED STATES PATENT AND TRADEMARK OFFICE

Commissioner for Patents
United States Patent and Trademark Office
P.O. Box 1450
Alexandria, VA 22313-1450
www.uspto.gov

PLEVY & HOWARD, P.C.
P.O. BOX 226
FORT WASHINGTON PA 19034

In re Application of SCHARFENBERGER Application No.: 10/535,869 PCT No.: PCT/DE03/03797 Int. Filing Date: 17 November 2003 Priority Date: 20 November 2002 Attorney Docket No.: PPRPB-1 For: COMMERCIAL VEHICLE, ESPECIALLY A TRUCK WITH A LIFTING LOADING PLATFORM	DECISION ON PETITION UNDER 37 CFR 1.137(b)

This decision is in response to applicant's petition to revive under 37 CFR 1.137(b) filed 28 September 2005.

BACKGROUND

On 17 November 2003, applicants filed international application PCT/DE03/03797 which designated the U.S. and claimed a priority date of 20 November 2002. A copy of the international application was communicated to the United States Patent and Trademark Office (USPTO) from the International Bureau on 03 June 2004. The thirty-month period for paying the basic national fee in the United States expired at midnight on 20 May 2005.

On 20 May 2005, applicants filed a transmittal letter for entry into the national stage in the United States, which was accompanied by, *inter alia*, a translation of the international application into English. The Basic National Fee was not included.

On 14 September 2005, the United States Designated/Elected Office (DO/EO/US) mailed a NOTIFICATION OF ABANDONMENT (Form PCT/DO/EO/909) indicating that the application was abandoned as to the United States of America for failure to provide the U.S. Basis National Fee by thirty months from the priority date.

On 28 September 2005, applicant submitted the instant petition to revive under 37 CFR 1.137(b) and an assertion of small entity status.

DISCUSSION

A petition to revive the present application under 37 CFR 1.137(b) must include:

(1) The required reply;
(2) The petition fee;
(3) A statement that the entire delay in filing the required reply from the due date for the reply until the filing of a grantable petition was unintentional.

As to item (1), applicant submitted the basic national fee on 28 September 2005.

As to item (2), applicant submitted the petition fee on 28 September 2005.

As to item (3), the required statement has been provided.

A review of the application file reveals that, with the filing of the present petition and accompanying papers, a proper response has been submitted and all of the requirements of 37 CFR 1.137(b) for revival have been satisfied and revival is therefore appropriate.

CONCLUSION

The petition under 37 CFR 1.137(b) is **GRANTED** for the reasons set forth above.

Please direct further correspondence with respect to this matter to Mail Stop PCT, Commissioner for Patents, Office of PCT Legal Administration, P.O. Box 1450, Alexandria, Virginia 22313-1450, with the contents of the letter marked to the attention of the Office of PCT Legal Administration.

This application is being forwarded to the National Stage Processing Branch of the Office of PCT Operations to continue national stage processing of the application including preparing and mailing a NOTIFICATION OF MISSING REQUIREMENTS (Form PCT/DO/EO/905) requiring an oath or declaration of the inventors in compliance with 37 CFR 1.497(a)-(b) and the surcharge under 37 CFR 1.492(h) for filing any of the search fee, the examination fee, or the oath or declaration after the date of the commencement of the national stage.

Daniel Stemmer
Legal Examiner
PCT Legal Affairs
Office of Patent Cooperation Treaty
Legal Administration
Telephone: (571) 272-3301
Facsimile: (571) 273-0459

27 SEP 2005

UNITED STATES PATENT AND TRADEMARK OFFICE

Commissioner for Patents
United States Patent and Trademark Office
P.O. Box 1450
Alexandria, VA 22313-1450
www.uspto.gov

Kirk D. Houser
Eckert Seamans Cherin & Mellott
600 Grant St., 44th Floor
Pittsburgh PA 15219

In re Application of	:	
JACKSON, Jonathan K. et al.	:	
Application No.: 10/535,870	:	DECISION
PCT No.: PCT/GB03/04833	:	
Int. Filing Date: 10 November 2003	:	ON PETITION UNDER
Priority Date: 08 November 2002	:	
Docket No.: 050348-01665	:	37 CFR 1.137(b)
For: RESIDUAL CURRENT DEVICES	:	

Applicants' "Petition For Revival of an Application For Patent Abandoned Unintentionally Under 37 CFR 1.137(b)," filed in the above-captioned application on 20 May 2005 is **GRANTED**.

Applicants state that "the entire delay in filing the required reply from the due date for the required reply until the filing of a grantable petition under 37 CFR 1.137(b) was unintentional," as required by 37 CFR 1.137(b)(3). The appropriate national fee and petition fee have been submitted. A terminal disclaimer is not required as the application was filed on or after 08 June 1995. Accordingly, all requirements under 37 CFR 1.137(b) have been satisfied.

A signed oath or declaration has not yet been submitted.

This application is being forwarded to the National Stage Processing Branch of the Office of PCT Operations for continued processing in accordance with this decision, including the mailing of a Notification of Missing Requirements (Form PCT/DO/EO/905) indicating that an oath or declaration in compliance with 37 CFR 1.497(a)-(b) and the surcharge for late filing of the search fee, examination fee or the oath or declaration are required.

Erin P. Thomson

Erin P. Thomson
Attorney Advisor
PCT Legal Administration

Telephone: 571-272-3292
Facsimile: 571-273-0459

UNITED STATES PATENT AND TRADEMARK OFFICE

Commissioner for Patents
United States Patent and Trademark Office
P.O. Box 1450
Alexandria, VA 22313-1450
www.uspto.gov

MARK D. SARALINO (GENERAL)
RENNER, OTTO, BOISSELLE & SKLAR, LLP
1621 EUCLID AVENUE, NINETEENTH FLOOR
CLEVELAND, OH 44115-2191

COPY MAILED

MAR 1 8 2009

OFFICE OF PETITIONS

In re Patent No. 7,426,883 :
Issue Date: September 23, 2008 :
Application No. 10/535,871 : ON PETITION
Filed: October 31, 2005 :
Patentee(s): Yoshitaka Nishio, et. al. :

This is a decision on the request under 37 CFR 3.81[1], filed October 1, 2008, to correct the name of the assignee on the front page of the above-identified patent by way of a Certificate of Correction.

Since the present request complies with the requirements of 37 CFR 3.81, the request is **GRANTED**.

The Certificates of Correction Branch will be notified of this decision granting the petition under 37 CFR 3.81(b) and directing issuance of the requested Certificate of Correction.

Telephone inquiries concerning this decision may be directed to the undersigned at (571) 272-3226. Inquiries regarding the issuance of a Certificate of Correction should be directed to the Certificates of Correction Branch at (703) 305-8309.

Andrea Smith
Petitions Examiner
Office of Petitions

[1] *See* MPEP 1309, subsection II; and Official Gazette of June 22, 2004.

-COPY-

CERTIFICATE OF MAILING, FACSIMILE OR ELECTRONIC TRANSMISSION

I hereby certify that this paper (along with any paper referred to as being attached or enclosed) is
____ being deposited with the United States Postal Service with sufficient postage for first class mail in an envelope addressed to the Commissioner for Patents address below.
__X_ being transmitted via the USPTO Electronic Filing System.

/Christine Arndt/ — October 1, 2008
Christine Arndt — Date

IN THE UNITED STATES PATENT AND TRADEMARK OFFICE

Applicant: Nishio et al.

Patent No.: 7,426,883 Issue Date: September 23, 2008

Serial No.: 10/535,871 Filing Date: October 31, 2005

Title: **SUBSTRATE-CUTTING SYSTEM, SUBSTRATE-PRODUCING APPARATUS, SUBSTRATE-SCRIBING METHOD, AND SUBSTRATE-CUTTING METHOD**

Examiner: Landrum, Edward F

Docket No.: YAMAP0982US

Confirmation Number: 9176

REQUEST FOR ISSUANCE TO AN ASSIGNEE AFTER PAYMENT OF ISSUE FEE UNDER 37 C.F.R. § 3.81(b)

ATTN: Office of Petitions
Commissioner for Patents
U.S. Patent and Trademark Office
P.O. Box 1450
Alexandria, VA 22313-1450

Sir:

Applicants request that the subject Patent be corrected to state the name of MITSUBOSHI DIAMOND INDUSTRIAL CO., LTD., the present Assignee to the subject Application.

Background

Through a clerical error, the Issue Fee was paid on August 15, 2008 identifying no assignee to the subject Patent.

Applicants have previously assigned the Application to MITSUBOSHI DIAMOND INDUSTRIAL CO., LTD. Said assignment was submitted for

03/18/2009 CKHLOK 00000003 7426883
01 FC:1808 130.00 OP
02 FC:1811 100.00 OP

Adjustment date: 03/18/2009 CKHLOK
10/02/2008 INTEFSW 00001059 10535871
01 FC:1464 -130.00 OP
02 FC:1811 -100.00 OP

recordation as set forth in 37 CFR 3.11 before issuance of the Patent. A copy of the assignment and Notice of Recordation is attached to this request.

Applicants desire the Patent to issue in the name of MITSUBOSHI DIAMOND INDUSTRIAL CO., LTD. Therefore, Applicants request the patent issue in the name of MITSUBOSHI DIAMOND INDUSTRIAL CO., LTD.

Pursuant to MPEP 307 and 37 CFR 3.81(b), in addition to this request that the subject patent issue under the name of MITSUBOSHI DIAMOND INDUSTRIAL CO., LTD., Applicants submit the following:

1. A processing fee of $130 as required by 37 CFR 1.17(i); and
2. A request for certificate of correction under 37 CFR 1.323

accompanied by the $100 fee as set forth in 37 CFR 1.20(a).

The $130 processing fee as required by 37 CFR 1.17(i) and Certificate of Correction Fee of $100 is being submitted via EFS. If there are any additional fees or fee deficiencies resulting from this communication, please charge same to our Deposit Account No. 18-0988, Order No. YAMAP0982US.

Respectfully Submitted,
RENNER, OTTO, BOISSELLE & SKLAR, LLP

By /Mark D. Saralino/
Mark D. Saralino; Reg. No. 34,243

RENNER, OTTO, BOISSELLE & SKLAR, LLP
1621 Euclid Avenue
19th Floor
Cleveland, Ohio 44115

11 OCT 2005

UNITED STATES PATENT AND TRADEMARK OFFICE

COMMISSIONER FOR PATENTS
UNITED STATES PATENT AND TRADEMARK OFFICE
P.O. BOX 1450
ALEXANDRIA, VA 22313-1450
www.uspto.gov

Kirk D. Houser
Eckert Seamans Cherin & Mellott, LLC
600 Grant St., 44th Floor
Pittsburgh, PA 15219

In re Application of LEWIS et al	:	
U.S. Application No.: 10/535,878	:	
PCT Application No.: PCT/GB03/04844	:	DECISION
Int. Filing Date: 10 November 2003	:	
Priority Date Claimed: 08 November 2002	:	
Attorney Docket No.: 050348-01666	:	
For: MINIATURE SWITCHGEAR DEVICES	:	

This is in response to applicant's "Petition for Revival of an International Application for Patent Designating the U.S. Abandoned Unintentionally Under 37 CFR 1.137(b)" filed 20 May 2005.

BACKGROUND

On 10 November 2003, applicant filed international application PCT/GB03/04844, which claimed priority of an earlier United Kingdom application filed 08 November 2002. A copy of the international application was communicated to the USPTO from the International Bureau on 21 May 2004. The thirty-month period for paying the basic national fee in the United States expired on 08 May 2005.

International application PCT/GB03/04844 became abandoned as to the United States for failure to timely pay the basic national fee.

On 20 May 2005, applicant filed the present petition under 37 CFR 1.137(b).

DISCUSSION

Under 37 CFR 1.137(b), a petition requesting that an application be revived on the grounds of unintentional abandonment must be accompanied by: (1) the required reply unless previously filed, (2) the petition fee as set forth in 37 CFR 1.17(m), (3) a statement that the entire delay in filing the required reply from the due date for the reply until the filing of a grantable petition was unintentional, and (4) a terminal disclaimer if the application was filed before 08 June 1995.

With regard to item (1), applicant has provided the required basic national fee under 35 U.S.C. 371.

With regard to item (2), applicant has provided the required petition fee.

With regard to item (3), applicant has provided the required statement.

With regard to item (4), because the international application was filed after 08 June 1995, no terminal disclaimer is required.

CONCLUSION

For the reasons above, the petition under 37 CFR 1.137(b) is GRANTED.

This application is being forwarded to the United States Designated/Elected Office (DO/EO/US) for further processing in accordance with this decision, including preparation and mailing of a Notification of Missing Requirements under 35 U.S.C. 371 (Form PCT/DO/EO/905) indicating that an oath or declaration in compliance with 37 CFR 1.497 must be filed.

Please direct further correspondence with respect to this matter to Mail Stop PCT, Commissioner for Patents, Office of PCT Legal Administration, P.O. Box 1450, Alexandria, Virginia 22313-1450, with the contents of the letter marked to the attention of the Office of PCT Legal Administration.

Bryan Tung
PCT Legal Examiner
Office of PCT Legal Administration

Telephone: 571-272-3303
Facsimile: 571-273-0459

UNITED STATES PATENT AND TRADEMARK OFFICE

Commissioner for Patents
United States Patent and Trademark Office
P.O. Box 1450
Alexandria, VA 22313-1450
www.uspto.gov
DIW Jul-07

LEO H MCCORMICK JR
ROBERT BOSCH CORPORATION
2112 MISHAWAKA AVENUE
P O BOX 4721
SOUTH BEND IN 46637

COPY MAILED

JUL 24 2007

OFFICE OF PETITIONS

In re Application of	:	
Frederic Jayko	:	
Application No. 10/535,883	:	LETTER
Filed: 04/11/2006	:	
Atty Docket No. 825-02-624	:	

This is a communication in response to the "Petition to the Commissioner" filed on 10 May, 2007.

Petitioner requests the acceptance of a response to the Office action mailed on 26 August, 2006. Petitioner further states "This application was unintentionally abandoned and applicant requests revival under 37 CFR 1.137a." Petitioner further authorized charging "the fee of $1200 for revival" to counsel's deposit account.

A petition to revive where the delay was unavoidable is filed under 37 CFR 1.137(a), while a petition to revive where the delay was unintentional is filed under 37 CFR 1.137(b). Additionally, neither a petition under 37 CFR 1.137(a) nor 1.137(b) requires a petition fee in the amount of $1,200.00. Thus, it is unclear whether petitioner intended to file a petition under 37 CFR 1.137(b) or a petition under 37 CFR 1.137(a). Review of the petition filed cannot proceed until petitioner clarifies whether the Office should consider the petition under 37 CFR 1.137(b) or under 37 CFR 1.137(a).[1]

Petitioner may wish to submit the appropriate fee and form in order for the Office to treat the petition as a petition under 37 CFR 1.137(b). A copy of the form for a petition under 37 CFR 1.137(b) is enclosed. If petitioner desires to have the petition treated as a petition under 37 CFR 1.137(a), petitioner must

[1] See 35 USC 41(a)(7); MPEP 711.03(c).

submit a showing that the entire delay in filing the required reply from the due date for the required reply until the filing of a grantable petition under 37 CFR 1.137(a) was unavoidable. The Manual of Patent Examining Procedure, Section 711.03(c), provides a general discussion of the procedures for filing a petition to revive an abandoned application. Petitioner may access the MPEP by visiting the USPTO's internet site at www.uspto.gov.

Petitioner is further reminded that a grantable petition under 37 CFR 1.137(b) requires petitioner provide a statement that the entire delay in filing the required reply from the due date for the reply until the filing of a grantable petition pursuant to 37 CFR 1.137(b) was unintentional.[2] The Director may require additional information where there is a question whether the delay was unintentional.

Petitioner should file a properly signed petition, accompanied by the proper petition fee.

A reply to this communication should be submitted within ONE (1) MONTH of the date of mailing of this communication.

Further correspondence with respect to this matter should be addressed as follows:

By mail: Mail Stop Petition
Commissioner for Patents
P.O. Box 1450
Alexandria, VA 22313-1450

By FAX: (571) 273-8300
Attn: Office of Petitions

By hand: Customer Service Window
Mail Stop Petition
Randolph Building
401 Dulany Street
Alexandria, VA 22314

---

[2] See Changes to Patent Practice and Procedure, 62 Fed. Reg. at 53160 and 53178, 1203 Off. Gaz. Pat. Office at 88 and 103 (responses to comments 64 and 109) (applicant obligated under 37 CFR 10.18 to inquire into the underlying facts and circumstances when providing the statement required by 37 CFR 1.137(b) to the Patent and Trademark Office).

Telephone inquiries concerning this matter may be directed to the undersigned at (571) 272-3231.

Douglas I. Wood
Senior Petitions Attorney
Office of Petitions

Encl: PTO/SB/64
Fee Schedule

PTO/SB/64 (04-07)
Approved for use through 09/30/2007. OMB 0651-0031
U.S. Patent and Trademark Office; U.S. DEPARTMENT OF COMMERCE
Under the Paperwork Reduction Act of 1995, no persons are required to respond to a collection of information unless it displays a valid OMB control number.

PETITION FOR REVIVAL OF AN APPLICATION FOR PATENT ABANDONED UNINTENTIONALLY UNDER 37 CFR 1.137(b)

Docket Number (Optional)

First named inventor:

Application No.: Art Unit:

Filed: Examiner:

Title:

Attention: Office of Petitions
Mail Stop Petition
Commissioner for Patents
P.O. Box 1450
Alexandria, VA 22313-1450
FAX (571) 273-8300

NOTE: If information or assistance is needed in completing this form, please contact Petitions Information at (571) 272-3282.

The above-identified application became abandoned for failure to file a timely and proper reply to a notice or action by the United States Patent and Trademark Office. The date of abandonment is the day after the expiration date of the period set for reply in the office notice or action plus an extensions of time actually obtained.

APPLICANT HEREBY PETITIONS FOR REVIVAL OF THIS APPLICATION

NOTE: A grantable petition requires the following items:
(1) Petition fee;
(2) Reply and/or issue fee;
(3) Terminal disclaimer with disclaimer fee - required for all utility and plant applications filed before June 8, 1995; and for all design applications; and
(4) Statement that the entire delay was unintentional.

1.Petition fee

☐ Small entity-fee $ _____ (37 CFR 1.17(m)). Applicant claims small entity status. See 37 CFR 1.27.

☐ Other than small entity – fee $ _____ (37 CFR 1.17(m))

2. Reply and/or fee

A. The reply and/or fee to the above-noted Office action in the form of _____(identify type of reply):

☐ has been filed previously on _____.
☐ is enclosed herewith.

B. The issue fee and publication fee (if applicable) of $ _____.

☐ has been paid previously on _____.
☐ is enclosed herewith.

This collection of information is required by 37 CFR 1.137(b). The information is required to obtain or retain a benefit by the public which is to file (and by the USPTO to process) an application. Confidentiality is governed by 35 U.S.C. 122 and 37 CFR 1.11 and 1.14. This collection is estimated to take 1.0 hour to complete, including gathering, preparing, and submitting the completed application form to the USPTO. Time will vary depending upon the individual case. Any comments on the amount of time you require to complete this form and/or suggestions for reducing this burden, should be sent to the Chief Information Officer, U.S. Patent and Trademark Office, U.S. Department of Commerce, P.O. Box 1450, Alexandria, VA 22313-1450. DO NOT SEND FEES OR COMPLETED FORMS TO THIS ADDRESS. **SEND TO: Mail Stop Petition, Commissioner for Patents, P.O. Box 1450, Alexandria, VA 22313-1450.**

If you need assistance in completing the form, call 1-800-PTO-9199 and select option 2.

Under the Paperwork Reduction Act of 1995, no persons are required to respond to a collection of information unless it displays a valid OMB control number.

3. Terminal disclaimer with disclaimer fee

☐ Since this utility/plant application was filed on or after June 8, 1995, no terminal disclaimer is required.

☐ A terminal disclaimer (and disclaimer fee (37 CFR 1.20(d)) of $ _____ for a small entity or $ _____ for other than a small entity) disclaiming the required period of time is enclosed herewith (see PTO/SB/63).

4. STATEMENT: The entire delay in filing the required reply from the due date for the required reply until the filing of a grantable petition under 37 CFR 1.137(b) was unintentional. [NOTE: The United States Patent and Trademark Office may require additional information if there is a question as to whether either the abandonment or the delay in filing a petition under 37 CFR 1.137(b) was unintentional (MPEP 711.03(c), subsections (III)(C) and (D)).]

WARNING:

Petitioner/applicant is cautioned to avoid submitting personal information in documents filed in a patent application that may contribute to identity theft. Personal information such as social security numbers, bank account numbers, or credit card numbers (other than a check or credit card authorization form PTO-2038 submitted for payment purposes) is never required by the USPTO to support a petition or an application. If this type of personal information is included in documents submitted to the USPTO, petitioners/applicants should consider redacting such personal information from the documents before submitting them to the USPTO. Petitioner/applicant is advised that the record of a patent application is available to the public after publication of the application (unless a non-publication request in compliance with 37 CFR 1.213(a) is made in the application) or issuance of a patent. Furthermore, the record from an abandoned application may also be available to the public if the application is referenced in a published application or an issued patent (see 37 CFR 1.14). Checks and credit card authorization forms PTO-2038 submitted for payment purposes are not retained in the application file and therefore are not publicly available.

Signature	Date
Typed or printed name	Registration Number, if applicable
Address	Telephone Number
Address	

Enclosures:
- ☐ Fee Payment
- ☐ Reply
- ☐ Terminal Disclaimer Form
- ☐ Additional sheets containing statements establishing unintentional delay
- ☐ Other: _____

CERTIFICATE OF MAILING OR TRANSMISSION [37 CFR 1.8(a)]

I hereby certify that this correspondence is being:

☐ Deposited with the United States Postal Service on the date shown below with sufficient postage as first class mail in an envelope addressed to: Mail Stop Petition, Commissioner for Patents, P. O. Box 1450, Alexandria, VA 22313-1450.

☐ Transmitted by facsimile on the date shown below to the United States Patent and Trademark Office at (571) 273-8300.

Date	Signature
	Typed or printed name of person signing certificate

Privacy Act Statement

The **Privacy Act of 1974 (P.L. 93-579)** requires that you be given certain information in connection with your submission of the attached form related to a patent application or patent. Accordingly, pursuant to the requirements of the Act, please be advised that: (1) the general authority for the collection of this information is 35 U.S.C. 2(b)(2); (2) furnishing of the information solicited is voluntary; and (3) the principal purpose for which the information is used by the U.S. Patent and Trademark Office is to process and/or examine your submission related to a patent application or patent. If you do not furnish the requested information, the U.S. Patent and Trademark Office may not be able to process and/or examine your submission, which may result in termination of proceedings or abandonment of the application or expiration of the patent.

The information provided by you in this form will be subject to the following routine uses:

1. The information on this form will be treated confidentially to the extent allowed under the Freedom of Information Act (5 U.S.C. 552) and the Privacy Act (5 U.S.C 552a). Records from this system of records may be disclosed to the Department of Justice to determine whether disclosure of these records is required by the Freedom of Information Act.
2. A record from this system of records may be disclosed, as a routine use, in the course of presenting evidence to a court, magistrate, or administrative tribunal, including disclosures to opposing counsel in the course of settlement negotiations.
3. A record in this system of records may be disclosed, as a routine use, to a Member of Congress submitting a request involving an individual, to whom the record pertains, when the individual has requested assistance from the Member with respect to the subject matter of the record.
4. A record in this system of records may be disclosed, as a routine use, to a contractor of the Agency having need for the information in order to perform a contract. Recipients of information shall be required to comply with the requirements of the Privacy Act of 1974, as amended, pursuant to 5 U.S.C. 552a(m).
5. A record related to an International Application filed under the Patent Cooperation Treaty in this system of records may be disclosed, as a routine use, to the International Bureau of the World Intellectual Property Organization, pursuant to the Patent Cooperation Treaty.
6. A record in this system of records may be disclosed, as a routine use, to another federal agency for purposes of National Security review (35 U.S.C. 181) and for review pursuant to the Atomic Energy Act (42 U.S.C. 218(c)).
7. A record from this system of records may be disclosed, as a routine use, to the Administrator, General Services, or his/her designee, during an inspection of records conducted by GSA as part of that agency's responsibility to recommend improvements in records management practices and programs, under authority of 44 U.S.C. 2904 and 2906. Such disclosure shall be made in accordance with the GSA regulations governing inspection of records for this purpose, and any other relevant (*i.e.*, GSA or Commerce) directive. Such disclosure shall not be used to make determinations about individuals.
8. A record from this system of records may be disclosed, as a routine use, to the public after either publication of the application pursuant to 35 U.S.C. 122(b) or issuance of a patent pursuant to 35 U.S.C. 151. Further, a record may be disclosed, subject to the limitations of 37 CFR 1.14, as a routine use, to the public if the record was filed in an application which became abandoned or in which the proceedings were terminated and which application is referenced by either a published application, an application open to public inspection or an issued patent.
9. A record from this system of records may be disclosed, as a routine use, to a Federal, State, or local law enforcement agency, if the USPTO becomes aware of a violation or potential violation of law or regulation.

UNITED STATES PATENT AND TRADEMARK OFFICE

UNDER SECRETARY OF COMMERCE FOR INTELLECTUAL PROPERTY AND
DIRECTOR OF THE UNITED STATES PATENT AND TRADEMARK OFFICE

REVISED FEE SCHEDULE

H.R. 4818, the Consolidated Appropriations Act, 2005 (Consolidated Appropriations Act) was signed by the President and enacted into law on December 8, 2004 (Public Law 108-447). The Consolidated Appropriations Act revises certain patent application and maintenance fees; provides separate fees for a basic filing fee, a search fee, and an examination fee; and requires an additional fee for any patent application whose specification and drawings exceed 100 sheets of paper (application size fee). In addition, the trademark application fee, per class, is revised if submitted by paper or electronically using the Trademark Electronic Application System (TEAS).

Notices will be published in the *Federal Register* and in the *Official Gazette of the United States Patent and Trademark Office* to provide additional information.

Any fee amount paid on or after December 8, 2004 must be paid as shown in the revised fee schedule, which reflects when the old filing fees still apply. However, fee amounts paid on or after the following dates for the fees below are subject to the revised fee schedule:

- January 31, 2005, for 37 CFR 2.6(a)(1)(i) and (ii); and
- February 1, 2005, for 37 CFR 1.492(b)(1), (b)(2), and (c)(1).

The fee schedule is available on our Web site at *www.uspto.gov.* The most up-to-date fee amounts and information, as well as the complete listing and description of fees, are also available on our Web site. Any future changes to the fees will be posted to the Web site. If you have any questions related to patents and trademarks, please call the USPTO Contact Center at (703) 308-4357 or (800) 786-9199, or by fax at (703) 305-7786.

Jo-Anne Barnard

Jo-Anne Barnard
Chief Financial Officer and
Chief Administrative Officer

UNITED STATES PATENT AND TRADEMARK OFFICE
Effective December 8, 2004*

Any fee amount paid on or after December 8, 2004, must be paid as shown in the revised fee schedule.
The fees subject to reduction for small entities that have established status (37 CFR 1.27) are shown in a separate column.
For additional information, please call the USPTO Contact Center at (703) 308-4357 or (800) 786-9199.

*The effective date for the fee amounts in 37 CFR 2.6(a)(1) is January 31, 2005.
The effective date for the fee amounts in 37 CFR 1.492(b)(1), (b)(2), and (c)(1) is February 1, 2005.

Fee Code	37 CFR	Description	Fee	Small Entity Fee (if applicable)
Patent Application Filing Fees				
1011/2011	1.16(a)(1)	Basic filing fee - Utility *filed on or after December 8, 2004*	300.00	150.00
4011†	1.16(a)(1)	Basic filing fee - Utility (electronic filing) *filed on or after December 8, 2004*	N/A	75.00
1001/2001	1.16(a)(2)	Basic filing fee - Utility *filed before December 8, 2004*	790.00	395.00
1201/2201	1.16(h)	Independent claims in excess of three	200.00	100.00
1202/2202	1.16(i)	Claims in excess of 20	50.00	25.00
1203/2203	1.16(j)	Multiple dependent claim	360.00	180.00
1051/2051	1.16(f)	Surcharge - Late filing fee or oath or declaration	130.00	65.00
1081/2081	1.16(s)	Utility Application Size Fee - for each additional 50 sheets	250.00	125.00
1012/2012	1.16(b)(1)	Basic filing fee - Design *filed on or after December 8, 2004*	200.00	100.00
1002/2002	1.16(b)(2)	Basic filing fee - Design *filed before December 8, 2004*	350.00	175.00
1017/2017	1.16(b)(1)	Basic filing fee - Design (CPA) *filed on or after December 8, 2004*	200.00	100.00
1007/2007	1.16(b)(2)	Basic filing fee - Design (CPA) *filed before December 8, 2004*	350.00	175.00
1082/2082	1.16(s)	Design Application Size Fee - for each additional 50 sheets	250.00	125.00
1013/2013	1.16(c)(1)	Basic filing fee - Plant *filed on or after December 8, 2004*	200.00	100.00
1003/2003	1.16(c)(2)	Basic filing fee - Plant *filed before December 8, 2004*	550.00	275.00
1083/2083	1.16(s)	Plant Application Size Fee – for each additional 50 sheets	250.00	125.00
1014/2014	1.16(e)(1)	Basic filing fee - Reissue *filed on or after December 8, 2004*	300.00	150.00
1004/2004	1.16(e)(2)	Basic filing fee - Reissue *filed before December 8, 2004*	790.00	395.00
1019/2019	1.16(e)(1)	Basic filing fee - Design Reissue (CPA) *filed on or after December 8, 2004*	300.00	150.00
1009/2009	1.16(e)(2)	Basic filing fee - Design Reissue (CPA) *filed before December 8, 2004*	790.00	395.00
1204/2204	1.16(h)	Reissue independent claims in excess of three	200.00	100.00
1205/2205	1.16(i)	Reissue claims in excess of 20	50.00	25.00
1084/2084	1.16(s)	Reissue Application Size Fee - for each additional 50 sheets	250.00	125.00
1005/2005	1.16(d)	Provisional application filing fee	200.00	100.00
1085/2085	1.16(s)	Provisional Application Size Fee - for each additional 50 sheets	250.00	125.00
1052/2052	1.16(g)	Surcharge - Late provisional filing fee or cover sheet	50.00	25.00
1053	1.17(i)	Non-English specification	130.00	
Patent Search Fees				
1111/2111	1.16(k)	Utility Search Fee	500.00	250.00
1112/2112	1.16(l)	Design Search Fee	100.00	50.00
1113/2113	1.16(m)	Plant Search Fee	300.00	150.00
1114/2114	1.16(n)	Reissue Search Fee	500.00	250.00
Patent Examination Fees				
1311/2311	1.16(o)	Utility Examination Fee	200.00	100.00
1312/2312	1.16(p)	Design Examination Fee	130.00	65.00
1313/2313	1.16(q)	Plant Examination Fee	160.00	80.00
1314/2314	1.16(r)	Reissue Examination Fee	600.00	300.00
Patent Post-Allowance Fees				
1501/2501	1.18(a)	Utility issue fee	1,400.00	700.00
1502/2502	1.18(b)	Design issue fee	800.00	400.00
1503/2503	1.18(c)	Plant issue fee	1,100.00	550.00
1511/2511	1.18(a)	Reissue issue fee	1,400.00	700.00
1504	1.18(d)	Publication fee for early, voluntary, or normal publication	300.00	
1505	1.18(d)	Publication fee for republication	300.00	

† The 4000 series fee code may be used via EFS at *http://www.uspto.gov/ebc/efs/*.

PAYMENTS FROM FOREIGN COUNTRIES MUST BE PAYABLE AND IMMEDIATELY NEGOTIABLE IN THE UNITED STATES FOR THE FULL AMOUNT OF THE FEE REQUIRED

Fee Code	37 CFR	Description	Fee	Small Entity Fee (if applicable)
Patent Maintenance Fees				
1551/2551	1.20(e)	Due at 3.5 years	900.00	450.00
1552/2552	1.20(f)	Due at 7.5 years	2,300.00	1,150.00
1553/2553	1.20(g)	Due at 11.5 years	3,800.00	1,900.00
	1.20(h)	Surcharge - Late payment within 6 months	130.00	65.00
1557	1.20(i)(1)	Surcharge after expiration - Late payment is unavoidable	700.00	
1558	1.20(i)(2)	Surcharge after expiration - Late payment is unintentional	1,640.00	
Miscellaneous Patent Fees				
1801/2801	1.17(e)	Request for Continued Examination (RCE) (see 37 CFR 1.114)	790.00	395.00
1808	1.17(i)	Processing fee, except in provisional applications	130.00	
1803	1.17(i)	Request for voluntary publication or republication	130.00	
1802	1.17(k)	Request for expedited examination of a design application	900.00	
1804	1.17(n)	Request for publication of SIR - Prior to examiner's action	920.00*	
1805	1.17(o)	Request for publication of SIR - After examiner's action	1,840.00*	
1806	1.17(p)	Submission of an Information Disclosure Statement	180.00	
1807	1.17(q)	Processing fee for provisional applications	50.00	
1809/2809	1.17(r)	Filing a submission after final rejection (see 37 CFR 1.129(a))	790.00	395.00
1810/2810	1.17(s)	For each additional invention to be examined (see 37 CFR 1.129(b))	790.00	395.00
Post Issuance Fees				
1811	1.20(a)	Certificate of correction	100.00	
1812	1.20(c)(1)	Request for ex parte reexamination	2,520.00	
1813	1.20(c)(2)	Request for inter partes reexamination	8,800.00	
1821/2821	1.20(c)(3)	Reexamination independent claims in excess of three	200.00	100.00
1822/2822	1.20(c)(4)	Reexamination claims in excess of 20	50.00	25.00
1814/2814	1.20(d)	Statutory disclaimer	130.00	65.00
Patent Extension of Time Fees				
1251/2251	1.17(a)(1)	Extension for response within first month	120.00	60.00
1252/2252	1.17(a)(2)	Extension for response within second month	450.00	225.00
1253/2253	1.17(a)(3)	Extension for response within third month	1,020.00	510.00
1254/2254	1.17(a)(4)	Extension for response within fourth month	1,590.00	795.00
1255/2255	1.17(a)(5)	Extension for response within fifth month	2,160.00	1,080.00
Patent Appeals/Interference Fees				
1401/2401	41.20(b)(1)	Notice of appeal	500.00	250.00
1402/2402	41.20(b)(2)	Filing a brief in support of an appeal	500.00	250.00
1403/2403	41.20(b)(3)	Request for oral hearing	1,000.00	500.00
Patent Petition Fees				
1462	1.17(f)	Petitions requiring the petition fee set forth in 37 CFR 1.17(f) (Group I)	400.00	
1463	1.17(g)	Petitions requiring the petition fee set forth in 37 CFR 1.17(g) (Group II)	200.00	
1464	1.17(h)	Petitions requiring the petition fee set forth in 37 CFR 1.17(h) (Group III)	130.00	
1451	1.17(j)	Petition to institute a public use proceeding	1,510.00	
1452/2452	1.17(l)	Petition to revive unavoidably abandoned application	500.00	250.00
1453/2453	1.17(m)	Petition to revive unintentionally abandoned application	1,500.00	750.00
1454	1.17(t)	Acceptance of an unintentionally delayed claim for priority	1,370.00	
1455	1.18(e)	Filing an application for patent term adjustment	200.00	
1456	1.18(f)	Request for reinstatement of reduced term	400.00	
1457	1.20(j)(1)	Extension of term of patent	1,120.00	
1458	1.20(j)(2)	Initial application for interim extension (see 37 CFR 1.790)	420.00	
1459	1.20(j)(3)	Subsequent application for interim extension (see 37 CFR 1.790)	220.00	

* Reduced by basic filing fee paid.

PAYMENTS FROM FOREIGN COUNTRIES MUST BE PAYABLE AND IMMEDIATELY NEGOTIABLE IN THE UNITED STATES FOR THE FULL AMOUNT OF THE FEE REQUIRED

Fee Code	37 CFR	Description	Fee
Trademark Processing Fees*			
6001	2.6(a)(1)(i)	Application for registration, per international class (paper filing)	375.00
7001	2.6(a)(1)(ii)	Application for registration, per international class (electronic filing)	325.00
6002/7002	2.6(a)(2)	Filing an Amendment to Allege Use under § 1(c), per class	100.00
6003/7003	2.6(a)(3)	Filing a Statement of Use under § 1(d)(1), per class	100.00
6004/7004	2.6(a)(4)	Filing a Request for a Six-month Extension of Time for Filing a Statement of Use under § 1(d)(1), per class	150.00
6005/7005	2.6(a)(15)	Petitions to the Director	100.00
6006	2.6(a)(19)	Dividing an application, per new application (file wrapper) created	100.00
6201/7201	2.6(a)(5)	Application for renewal, per class	400.00
6203/7203	2.6(a)(6)	Additional fee for filing renewal application during grace period, per class	100.00
6204	2.6(a)(21)	Correcting a deficiency in a renewal application	100.00
6205/7205	2.6(a)(12)	Filing § 8 affidavit, per class	100.00
6206/7206	2.6(a)(14)	Additional fee for filing § 8 affidavit during grace period, per class	100.00
6207	2.6(a)(20)	Correcting a deficiency in a § 8 affidavit	100.00
6208/7208	2.6(a)(13)	Filing § 15 affidavit, per class	200.00
6210	2.6(a)(7)	Publication of mark under § 12(c), per class	100.00
6211	2.6(a)(8)	Issuing new certificate of registration	100.00
6212	2.6(a)(9)	Certificate of correction, registrant's error	100.00
6213	2.6(a)(10)	Filing disclaimer to registration	100.00
6214	2.6(a)(11)	Filing amendment to registration	100.00
6401/7401	2.6(a)(16)	Petition for cancellation, per class	300.00
6402/7402	2.6(a)(17)	Notice of opposition, per class	300.00
6403/7403	2.6(a)(18)	Ex parte appeal, per class	100.00
Trademark Madrid Protocol Fees*			
6901/7901	7.6(a)(1)	International application based on single application or registration, per class	100.00
6902/7902	7.6(a)(2)	Certifying an International application based on more than one basic application	150.00
6903/7903	7.6(a)(3)	Transmitting a Request to Record an Assignment or restriction under § 7.23 or 7.24	100.00
6904/7904	7.6(a)(4)	Filing a Notice of Replacement, per class	100.00
6905/7905	7.6(a)(5)	Filing an affidavit under § 71 of the Act	100.00
6906/7906	7.6(a)(6)	Surcharge for filing affidavit under § 71 of the Act during grace period, per class	100.00
6907/7907	7.6(a)(7)	Transmitting a subsequent designation	100.00
Trademark Service Fees			
8501	2.6(b)(1)	Printed copy of registered mark, delivery by USPS, USPTO Box, or electronic means	3.00
8503	2.6(b)(4)(i)	Certified copy of registered mark, with title and/or status, regular service	15.00
8504	2.6(b)(4)(ii)	Certified copy of registered mark, with title and/or status, expedited local service	30.00
8507	2.6(b)(2)	Certified copy of trademark application as filed	15.00
8508	2.6(b)(3)	Certified or uncertified copy of trademark-related file wrapper and contents	50.00
8513	2.6(b)(5)	Certified or uncertified copy of trademark document, unless otherwise provided	25.00
8514	2.6(b)(7)	For assignment records, abstracts of title and certification per registration	25.00
8902	2.6(b)(9)	Self-service copy charge, per page	0.25
8521	2.6(b)(6)	Recording trademark assignment, agreement or other paper, first mark per document	40.00
8522	2.6(b)(6)	For second and subsequent marks in the same document	25.00
8523	2.6(b)(10)	Labor charges for services, per hour or fraction thereof	40.00
8524	2.6(b)(11)	Unspecified other services, excluding labor	AT COST
Fastener Quality Act Fees			
6991	2.7(a)	Recordal application fee	20.00
6992	2.7(b)	Renewal application fee	20.00
6993	2.7(c)	Late fee for renewal application	20.00

* The 7000 series fee code (e.g., 7001, 7002, etc.) is used for electronic filings via TEAS, which is available at *www.uspto.gov/teas/*. In addition, the 6000 series fee codes under the Trademark Madrid Protocol Fees are being offered for use as a paper-based filing alternative.

PAYMENTS FROM FOREIGN COUNTRIES MUST BE PAYABLE AND IMMEDIATELY NEGOTIABLE IN THE UNITED STATES FOR THE FULL AMOUNT OF THE FEE REQUIRED

Fee Code	37 CFR	Description	Fee	Small Entity Fee (if applicable)
PCT Fees - National Stage				
1631/2631	1.492(a)	Basic National Stage Fee	300.00	150.00
1641/2641	1.492(b)(1)	National Stage Search Fee - U.S. was the ISA	100.00	50.00
1642/2642	1.492(b)(2)	National Stage Search Fee - search report prepared and provided to USPTO	400.00	200.00
1632/2632	1.492(b)(3)	National Stage Search Fee - all other situations	500.00	250.00
1643/2643	1.492(c)(1)	National Stage Examination Fee - U.S. was IPEA, and all claims satisfy PCT Article 33(1)-(4)	100.00	50.00
1633/2633	1.492(c)(2)	National Stage Examination Fee - all other situations	200.00	100.00
1614/2614	1.492(d)	Claims - extra independent (over three)	200.00	100.00
1615/2615	1.492(e)	Claims - extra total (over 20)	50.00	25.00
1616/2616	1.492(f)	Claims - multiple dependent	360.00	180.00
1681/2681	1.492(j)	National Stage Application Size Fee - for each additional 50 sheets	250.00	125.00
1617/2617	1.492(h)	Oath or declaration after 30 months from priority date	130.00	65.00
1618	1.492(i)	English translation after 30 months from priority date	130.00	
PCT Fees - International Stage				
1601	1.445(a)(1)	Transmittal fee	300.00	
1602	1.445(a)(2)	PCT search fee - no prior U.S. application filed under 35 USC 111(a)	1,000.00	
1603	1.445(a)(2)	PCT search fee - prior U.S. application filed under 35 USC 111(a)	300.00	
1604	1.445(a)(3)	Supplemental search fee per additional invention	1,000.00	
1605	1.482(a)(1)	Preliminary examination fee - U.S. was the ISA	600.00	
1606	1.482(a)(1)	Preliminary examination fee - U.S. was not the ISA	750.00	
1607	1.482(a)(2)	Supplemental examination fee per additional invention	600.00	
1619		Late payment fee	VARIABLE	
1620		Confirmed precautionary designation - confirmation portion	52.00*	
1621		Transmitting application to Intl. Bureau to act as receiving office	300.00	
1624		Confirmed precautionary designation - designation portion	104.00*	
PCT Fees to WIPO or EPO**				
1701		International filing fee (first thirty pages) - PCT Easy	1,053.00	
1702		International filing fee - (first thirty pages)	1,134.00	
1703		Supplemental international filing fee (for each page over thirty)	12.00	
1704		International search (EPO)	1,920.00	
1705		Handling fee	162.00	
1708		International CD applications	4,800.00	
Patent Enrollment Fees				
9001	1.21(a)(1)(i)	Application fee (non-refundable)	40.00	
9003	1.21(a)(2)	Registration to practice or grant limited recognition under § 11.9(b) or (c)	100.00	
9004	1.21(a)(3)	Reinstatement to practice	40.00	
9005	1.21(a)(4)	Certificate of good standing as an attorney or agent	10.00	
9006	1.21(a)(4)	Certificate of good standing as an attorney or agent; suitable for framing	20.00	
9010	1.21(a)(1)(ii)(A)	For test administration by commercial entity	200.00	
9011	1.21(a)(1)(ii)(B)	For test administration by the USPTO	450.00	
9012	1.21(a)(5)(i)	Review of decision by the Director of Enrollment and Discipline under § 11.2(c)	130.00	
9013	1.21(a)(5)(ii)	Review of decision of the Director of Enrollment and Discipline under § 11.2(d)	130.00	
9014	1.21(a)(10)	Application fee for person disciplined, convicted of a felony or certain misdemeanors	1,600.00	

* PCT fee codes 1620 and 1624 only apply to international applications filed prior to January 1, 2004.

** WIPO and EPO fees subject to periodic change due to fluctuations in exchange rate. Refer to the *Official Gazette of the United States Patent and Trademark Office* for current amounts.

PAYMENTS FROM FOREIGN COUNTRIES MUST BE PAYABLE AND IMMEDIATELY NEGOTIABLE IN THE UNITED STATES FOR THE FULL AMOUNT OF THE FEE REQUIRED

Fee Code	37 CFR	Description	Fee
Patent Service Fees			
8001	1.19(a)(1)	Printed copy of patent w/o color, delivery by USPS, USPTO Box, or electronic means	3.00
8003	1.19(a)(2)	Printed copy of plant patent in color	15.00
8004	1.19(a)(3)	Color copy of patent (other than plant patent) or SIR containing a color drawing	25.00
8005	1.19(a)(1)	Patent Application Publication (PAP)	3.00
8007	1.19(b)(1)(i)(A)	Copy of patent application as filed	20.00
8008	1.19(b)(1)(i)(B)	Copy of patent-related file wrapper and paper contents of 400 or fewer pages	200.00
8009	1.19(b)(1)(i)(C)	Each additional 100 pages of patent-related file wrapper and (paper) contents, or portion thereof	40.00
8010	1.19(b)(1)(i)(D)	Certification of patent-related file wrapper and (paper) contents	25.00
8011	1.19(b)(1)(ii)(B)	Copy of patent-related file wrapper and contents if provided electronically or on a physical electronic medium as specified in § 1.19(b)(1)(ii)	55.00
8012	1.19(b)(1)(ii)(C)	Each continuing physical electronic medium in single order of § 1.19(b)(1)(ii)(B)	15.00
8041	1.19(b)(2)(i)(A)	Copy of patent-related file wrapper contents, other than as available in § 1.19(b)(1); first physical electronic medium in a single order	55.00
8042	1.19(b)(2)(i)(B)	Each continuing copy of patent-related file wrapper and contents as specified in § 1.19(b)(2)(i)(A)	15.00
8043	1.19(b)(2)(ii)	Copy of patent-related file wrapper contents other than as available in § 1.19(b)(1); provided electronically other than on a physical electronic medium	55.00
8013	1.19(b)(3)	Copy of office records, except copies of applications as filed	25.00
8014	1.19(b)(4)	For assignment records, abstract of title and certification, per patent	25.00
8904	1.19(c)	Library service	50.00
8015	1.19(d)	List of U.S. patents and SIRs in subclass	3.00
8016	1.19(e)	Uncertified statement re status of maintenance fee payments	10.00
8017	1.19(f)	Copy of non-U.S. document	25.00
8050	1.19(g)	Petitions for documents in form other than that provided by this part, or in form other than that generally provided by Director, to be decided in accordance with merits	AT COST
8018	1.21(c)	Disclosure document filing fee	10.00
8019	1.21(d)	Local delivery box rental, annually	50.00
8020	1.21(e)	International type search report	40.00
8902	1.21(g)	Self-service copy charge, per page	0.25
8021	1.21(h)	Recording each patent assignment, agreement or other paper, per property	40.00
8022	1.21(i)	Publication in *Official Gazette*	25.00
8023	1.21(j)	Labor charges for services, per hour or fraction thereof	40.00
8024	1.21(k)	Unspecified other services, excluding labor	AT COST
8025	1.21(l)	Retaining abandoned application	130.00
8026	1.21(n)	Handling fee for incomplete or improper application	130.00
8027	1.296	Handling fee for withdrawal of SIR	130.00

GENERAL FEES

Finance Service Fees			
9201	1.21(b)(1) or 2.6(b)(13)(i)	Establish deposit account	10.00
9202	1.21(b)(2) or 2.6(b)(13)(ii)	Service charge for below minimum balance	25.00
9202	1.21(b)(3)	Service charge for below minimum balance restricted subscription deposit account	25.00
9101	1.21(m) or 2.6(b)(12)	Processing each payment refused or charged back	50.00
Computer Service Fees			
8031/8531		Computer records	AT COST

PAYMENTS FROM FOREIGN COUNTRIES MUST BE PAYABLE AND IMMEDIATELY NEGOTIABLE IN THE UNITED STATES FOR THE FULL AMOUNT OF THE FEE REQUIRED

2 2 JAN 2010

UNITED STATES PATENT AND TRADEMARK OFFICE

Commissioner for Patents
United States Patent and Trademark Office
P.O. Box 1450
Alexandria, VA 22313-1450
www.uspto.gov

MICHAEL BEST & FRIEDRICH LLP
100 E WISCONSIN AVENUE
Suite 3300
MILWAUKEE WI 53202

In re Application of:	
MALIGNE, Jean-Charles, et al.	
U.S. Application No.: 10/535,884	DECISION ON PETITION
PCT Application No.: PCT/EP2003/012750	(37 CFR 1.182)
International Filing Date: 14 November 2003	
Priority Date: 22 November 2002	
Attorney's Docket No.: 825-02-626	
For: BOOSTER AND BRAKE CONTROL DEVICE FITTED WITH THIS BOOSTER	

This decision is issued in response to the petition under 37 CFR 1.182 filed by applicants on 15 January 2010. Deposit Account No. 13-3080 will be charged the required $400 petition fee.

BACKGROUND

On 14 November 2003, applicants filed international application PCT/EP2003/012750. The international application claimed a priority date of 22 November 2002, and it designated the United States. On 10 June 2004, the International Bureau (IB) communicated a copy of the international application to the United States Patent and Trademark Office (USPTO). The deadline for submission of the basic national fee was thirty months from the priority date, i.e., 22 May 2005.

On 21 May 2005, applicant filed papers to initiate the U.S. national stage application. This submission included, among other materials, a Transmittal Letter (Form PTO-1390), an executed declaration, payment of the basic national fee, and a copy of an international search report (ISR). The Transmittal Letter filed 21 May 2005 identifies the international application as PCT/**FR**03/12750; however, the ISR provided by applicants was issued in application number PCT/**EP**03/12750.

On 02 February 2006, the United States Designated/Elected Office (DO/EO/US) mailed a "Notification Of Insufficient Basic National Fee Required And/Or Missing Copy Of International Application Under 35 U.S.C. 371 And 37 CFR 1.495" (Form PCT/DO/EO/912) indicating that a copy of the international application was missing. The Notification identified the international application number as PCT/FR03/12750.

On 11 April 2006, applicants filed a response to the Form PCT/DO/EO/912 that included a copy of "the application in the French language relating to international application PCT/FR03/12750 on which this application is dependent."

On 21 April 2006, applicants the DO/EO/US mailed a "Notification Of Acceptance" (Form PCT/DO/EO/903) indicating that the requirements of 35 U.S.C. 371(c)(1), (c)(2), and (c)(4) were satisfied as of 11 April 2006. The Notification identified the international application number as PCT/FR03/12750.

On 28 October 2009, a "Notice of Allowance And Fee(s) Due" (Form PTOL-85) and a "Notice of Allowability" (Form PTOL-37) were issued. The Notice of Allowability indicated that certified copies of priority applications FR 0214785 and PCT/FR03/12750 had not been received.

On 14 January 2010, applicants filed the petition under 37 CFR 1.182 considered herein. The petition seeks to correct the application file to indicate that the application is the U.S. national stage of PCT/**EP**2003/012750, not PCT/**FR**2003/012750 January 2009.

DISCUSSION

The instant petition confirms that the present application was intended as the U.S. national stage of international application PCT/EP2003/012750 and that the listing of international application PCT/FR03/12750 on the original national stage materials was an inadvertent error. It is noted that PCT/FR03/12750 does not appear to be a valid international application number. As noted above, the correct international application number (PCT/EP03/12750) was set forth on the ISR included with the original national stage application materials filed herein on 21 May 2005. In addition, applicants have included with the present petition payment of the required petition fee.

The present submission satisfies the requirements for a grantable petition to correct the error in the international application number listed on the Transmittal Letter filed 21 May 2005, so as to permit the present application to be treated as the national stage of PCT/EP2003/012750. Based on this correction, the materials filed herein, including the basic national fee, the executed declaration, and the English translation of the international application, are treated as having been filed with respect to international application PCT/EP2003/012750 on 21 May 2005 (prior to the expiration of thirty months from the application's priority date). The date under 35 U.S.C. 371(c)(1), (c)(2), and (c)(4) for the present national stage application is therefore 21 May 2005.

The "Notification Of Acceptance" (Form PCT/DO/EO/903) mailed 21 April 2009, which incorrectly identified the international application as PCT/FR03/12750 and the date under 35 U.S.C. 371(c)(1), (c)(2), and (c)(4) as 11 April 2006, is appropriately vacated.

A corrected "Notification Of Acceptance" (Form PCT/DO/EO/903) and filing receipt will be issued which correctly identifies the present application as the national stage of PCT/EP2003/012750 with a date under 35 U.S.C. 371(c)(1), (c)(2), and (c)(4) as 21 May 2005.

In addition, the appropriate documents from the international application file, including a copy of the published international application PCT/EP2003/012750 and the certified copy of the priority application, FR 0214785, contained in the international application file, will be placed in the present application file.

CONCLUSION

Applicants' petition under 37 CFR 1.182 to have the national stage application materials filed herein on 21 May 2005 treated as the U.S. national stage of international application PCT/EP2003/012750 is **GRANTED**.

The "Notification Of Acceptance" (Form PCT/DO/EO/903) mailed 21 April 2009, which incorrectly identified the international application as PCT/FR03/12750 and the date under 35 U.S.C. 371(c)(1), (c)(2), and (c)(4) as 11 April 2006, is hereby **VACATED**.

The application is being referred to the National Stage Processing Branch of the Office of PCT Operations for further processing in accordance with this decision, including: (1) the mailing of a corrected "Notification Of Acceptance" (Form PCT/DO/EO/903) and filing receipt identifying the international application as PCT/EP2003/012750 and the date under 35 U.S.C. 371(c)(1), (c)(2), and (c)(4) as 21 May 2005; and (2) placing in the present application file the appropriate documents from the international application file, including a copy of the publication of international application PCT/EP2003/012750 and the certified copy of the priority application, FR 0214785.

Richard M. Ross
Attorney Advisor
Office of PCT Legal Administration
Telephone: (571) 272-3296
Facsimile: (571) 273-0459

24 MAY 2006

#7

UNITED STATES PATENT AND TRADEMARK OFFICE

COMMISSIONER FOR PATENTS
UNITED STATES PATENT AND TRADEMARK OFFICE
P.O. BOX 1450
ALEXANDRIA, VA 22313-1450
www.uspto.gov

Browning Bushman P.C.
5718 Westheimer, Suite 1800
Houston, TX 77057-5771

In re Application of MIORCEC DE KERDANET et al	:	
U.S. Application No.: 10/535,898	:	
PCT Application No.: PCT/EP03/14835	:	
Int. Filing Date: 25 November 2003	:	DECISION
Priority Date Claimed: 29 November 2002	:	
Attorney Docket No.: Stolt-54	:	
For: SUBSEA STRUCTURE AND METHODS OF CONSTRUCTION AND INSTALLATION THEREOF	:	

This is in response to applicant's "Petition Pursuant to 37 CFR §1.47(a)" filed 31 March 2006.

BACKGROUND

On 25 November 2003, applicant filed international application PCT/EP03/14835, which claimed priority of an earlier United Kingdom application filed 29 November 2002. A copy of the international application was communicated to the USPTO from the International Bureau on 17 June 2004. The thirty-month period for paying the basic national fee in the United States expired on 29 May 2005.

On 23 May 2005, applicant filed national stage papers in the United States Designated/Elected Office (DO/EO/US). The submission was accompanied by, *inter alia*, the basic national fee required by 35 U.S.C. 371(c)(1).

On 28 November 2005, the DO/EO/US mailed a Notification of Missing Requirements Under 35 U.S.C. 371 (Form PCT/DO/EO/905), which indicated that an oath or declaration in compliance with 37 CFR 1.497 must be filed.

On 31 March 2006, applicant filed the present petition under 37 CFR 1.47(a).

DISCUSSION

A petition under 37 CFR 1.47(a) must be accompanied by: (1) an oath or declaration by each applicant on his or her own behalf and on behalf of the nonsigning joint inventors, (2) factual proof that the missing joint inventors refuse to join in the application or cannot be reached after diligent effort, (3) the fee set forth in §1.17(i), and (4) the last known addresses of the nonsigning joint inventors.

With regard to item (1) above, applicant has submitted a declaration signed by the available inventor on his/her own behalf and on behalf of the nonsigning inventor.

With regard to item (2) above, MPEP 409.03(d) states in relevant part,

> Where a refusal to sign the application papers is alleged, the circumstances of this refusal must be specified in an affidavit or declaration by the person to whom the refusal was made. Statements by a party not present when an oral refusal is made will not be accepted.
>
> Before a refusal can be alleged, it must be demonstrated that a bona fide attempt was made to present a copy of the application papers (specification, including claims, drawings, and oath or declaration) to the nonsigning inventor for signature. A copy of the application papers should be sent to the last known address of the nonsigning inventor, or, if the nonsigning inventor is represented by counsel, to the address of the nonsigning inventor's attorney.
>
> When there is an express oral refusal, that fact along with the time and place of the refusal must be stated in the affidavit or declaration. When there is an express written refusal, a copy of the document evidencing that refusal must be made part of the affidavit or declaration.
>
> When it is concluded by the 37 CFR 1.47 applicant that a nonsigning inventor's conduct constitutes a refusal, all facts upon which that conclusion is based should be stated in the affidavit or declaration. If there is documentary evidence to support facts alleged in the affidavit or declaration, such evidence should be submitted. Whenever a nonsigning inventor gives a reason for refusing to sign the application oath or declaration, that reason should be stated in the affidavit or declaration.

The petition states that joint inventor Etienne Beatrix refuses to sign the application papers. However, petitioner has not sufficiently demonstrated that a bona fide attempt was made to present a complete copy of the application papers to Beatrix for signature. Specifically, although the affidavit of Laura McLeod states that "various forms" including the declaration were delivered to Beatrix (see McLeod's affidavit, ¶5), it has not been established that the specification, claims, and drawings were delivered to Beatrix prior to the alleged refusal to sign. Furthermore, copies of various documents mentioned in Ms. McLeod's affidavit have not been provided. In particular, copies of the letter mailed 08 March 2006, the electronic mail message sent to yvette.Beatrix@bakernet.com, and Beatrix's reply to such electronic mail message have not been furnished. Thus, it would not be reasonable to conclude at the present time that Beatrix refuses to join in the application.

With regard to item (3) above, applicant has provided the requisite petition fee.

With regard to item (4) above, the petition states the last known address of the nonsigning inventor.

CONCLUSION

For the reasons above, the petition under 37 CFR 1.47(a) is DISMISSED without prejudice.

If reconsideration on the merits of this petition is desired, a proper response must be filed within TWO (2) MONTHS from the mail date of this decision. Extensions of time are available under 37 CFR 1.136(a). Failure to timely file a proper response will result in abandonment of the application. Any reconsideration request should include a cover letter entitled "Renewed Petition Under 37 CFR 1.47(a)". No additional petition fee is required.

Please direct further correspondence with respect to this matter to Mail Stop PCT, Commissioner for Patents, Office of PCT Legal Administration, P.O. Box 1450, Alexandria, Virginia 22313-1450, with the contents of the letter marked to the attention of the Office of PCT Legal Administration.

Bryan Tung
PCT Legal Examiner
PCT Legal Office

Telephone: 571-272-3303
Facsimile: 571-273-0459

05 SEP 2006

UNITED STATES PATENT AND TRADEMARK OFFICE

COMMISSIONER FOR PATENTS
UNITED STATES PATENT AND TRADEMARK OFFICE
P.O. BOX 1450
ALEXANDRIA, VA 22313-1450
www.uspto.gov

Browning Bushman P.C.
5718 Westheimer, Suite 1800
Houston, TX 77057-5771

In re Application of MIORCEC DE KERDANET et al	:	
U.S. Application No.: 10/535,898	:	
PCT Application No.: PCT/EP03/14835	:	
Int. Filing Date: 25 November 2003	:	DECISION
Priority Date Claimed: 29 November 2002	:	
Attorney Docket No.: Stolt-54	:	
For: SUBSEA STRUCTURE AND METHODS OF CONSTRUCTION AND INSTALLATION THEREOF	:	

This is in response to applicant's "Renewed Petition Pursuant to 37 CFR §1.47(a)" filed 28 August 2006.

BACKGROUND

On 25 November 2003, applicant filed international application PCT/EP03/14835, which claimed priority of an earlier United Kingdom application filed 29 November 2002. A copy of the international application was communicated to the USPTO from the International Bureau on 17 June 2004. The thirty-month period for paying the basic national fee in the United States expired on 29 May 2005.

On 23 May 2005, applicant filed national stage papers in the United States Designated/Elected Office (DO/EO/US). The submission was accompanied by, *inter alia*, the basic national fee required by 35 U.S.C. 371(c)(1).

On 28 November 2005, the DO/EO/US mailed a Notification of Missing Requirements Under 35 U.S.C. 371 (Form PCT/DO/EO/905), which indicated that an oath or declaration in compliance with 37 CFR 1.497 must be filed.

On 31 March 2006, applicant filed a petition under 37 CFR 1.47(a).

On 24 May 2006, this Office mailed a decision dismissing the 31 March 2006 petition.

On 28 August 2006, applicant filed the present renewed petition under 37 CFR 1.47(a).

DISCUSSION

A petition under 37 CFR 1.47(a) must be accompanied by: (1) an oath or declaration by each applicant on his or her own behalf and on behalf of the nonsigning joint inventors, (2) factual proof that the missing joint inventors refuse to join in the application or cannot be reached after diligent effort, (3) the fee set forth in §1.17(i), and (4) the last known addresses of the nonsigning joint inventors.

Petitioner has previously satisfied items (1), (3), and (4) above.

With regard to item (2) above, MPEP 409.03(d) states in relevant part,

> Where a refusal to sign the application papers is alleged, the circumstances of this refusal must be specified in an affidavit or declaration by the person to whom the refusal was made. Statements by a party not present when an oral refusal is made will not be accepted.
>
> Before a refusal can be alleged, it must be demonstrated that a bona fide attempt was made to present a copy of the application papers (specification, including claims, drawings, and oath or declaration) to the nonsigning inventor for signature. A copy of the application papers should be sent to the last known address of the nonsigning inventor, or, if the nonsigning inventor is represented by counsel, to the address of the nonsigning inventor's attorney.
>
> When there is an express oral refusal, that fact along with the time and place of the refusal must be stated in the affidavit or declaration. When there is an express written refusal, a copy of the document evidencing that refusal must be made part of the affidavit or declaration.
>
> When it is concluded by the 37 CFR 1.47 applicant that a nonsigning inventor's conduct constitutes a refusal, all facts upon which that conclusion is based should be stated in the affidavit or declaration. If there is documentary evidence to support facts alleged in the affidavit or declaration, such evidence should be submitted. Whenever a nonsigning inventor gives a reason for refusing to sign the application oath or declaration, that reason should be stated in the affidavit or declaration.

The renewed petition states that joint inventor Etienne Beatrix refuses to sign the application papers. Petitioner has sufficiently demonstrated that a bona fide attempt was made to present a complete copy of the application papers to Beatrix for signature (see 24 August 2006 affidavit of Laura McLeod, ¶9). Furthermore, petitioner has adequately illustrated that Beatrix refuses to sign. In particular Beatrix expressed his unwillingness to cooperate in an electronic mail message dated 05 August 2006 (see Exhibit H). Thus, it can be concluded with reasonable certainty that Beatrix refuses to join in the application.

CONCLUSION

For the reasons above, the petition under 37 CFR 1.47(a) is GRANTED.

The application has an International Filing Date under 35 U.S.C. 363 of 25 November 2003, and a date under 35 U.S.C. 371(c)(1), (c)(2), and (c)(4) of 31 March 2006.

As set forth in 37 CFR 1.47(a), a notice of the filing of this application will be forwarded to the nonsigning inventor at the last known address of record and will be published in the *Official Gazette*.

This application is being forwarded to the United States Designated/Elected Office (DO/EO/US) for further processing in accordance with this decision.

Bryan Tung
PCT Legal Examiner
PCT Legal Office

Telephone: 571-272-3303
Facsimile: 571-273-0459

05 SEP 2006

UNITED STATES PATENT AND TRADEMARK OFFICE

COMMISSIONER FOR PATENTS
UNITED STATES PATENT AND TRADEMARK OFFICE
P.O. BOX 1450
ALEXANDRIA, VA 22313-1450
www.uspto.gov

Etienne Beatrix
22 Avenue de general de Gaulle
F-78110, Le Vesinet
France

In re Application of MIORCEC DE KERDANET et al
U.S. Application No.: 10/535,898
PCT Application No.: PCT/EP03/14835
Int. Filing Date: 25 November 2003
Priority Date Claimed: 29 November 2002
For: SUBSEA STRUCTURE AND METHODS OF CONSTRUCTION AND INSTALLATION THEREOF

Dear Etienne Beatrix:

You are named as a joint inventor in the above-captioned United States national stage application, filed under the provisions of 37 CFR 1.47(a) and 35 U.S.C. 116. Should a patent be granted, you will be designated as an inventor.

As a named inventor, you are entitled to inspect any paper in the file wrapper of the application, order copies of all or any part thereof (at a prepaid cost set forth in 37 CFR 1.19) or to make your position of record in the application. Alternatively, you may arrange to do any of the preceding through a registered patent agent or attorney presenting written authorization from you. If you choose to join in the application, counsel of record (see below) would presumably assist you. Joining in the application would entail the filing of an appropriate oath or declaration by you pursuant to 37 CFR 1.63.

Bryan Tung
PCT Legal Examiner
PCT Legal Office
Telephone: 571-272-3303
Facsimile: 571-273-0459

Browning Bushman P.C.
5718 Westheimer, Suite 1800
Houston, TX 77057-5771
Attorney Docket No.: Stolt-54

UNITED STATES PATENT AND TRADEMARK OFFICE

Commissioner for Patents
United States Patent and Trademark Office
P.O. Box 1450
Alexandria, VA 22313-1450
www.uspto.gov

OSTROLENK FABER GERB & SOFFEN
1180 AVENUE OF THE AMERICAS
NEW YORK, NY 10036-8403

COPY MAILED

SEP 26 2007

OFFICE OF PETITIONS

In re Application of
Christopher Donnison et al. :
Application No. 10/535,902 :
Filed: September 16, 2005 :
Attorney Docket No: P/3202-29 :

ON PETITION

This is a decision on the petition filed September 13, 2007, to withdraw the holding of abandonment, which is treated under 37 CFR 1.181.

The petition to withdraw the holding of abandonment is **GRANTED**.

The application was held abandoned on May 1, 2007, for failure to file a timely response to the Final Office Action mailed January 30, 2007. A three month period for reply was set. No response and no extension of time having been filed, accordingly, a Notice of Abandonment was mailed on August 22, 2007.

Petitioner asserts that a response to the Final Office Action was filed on April 27, 2007 but that the application serial number was incorrectly identified on the response.

While, the requirement for filing papers with the USPTO is that every paper bear an appropriate application no. or identifier, a review of the materials submitted show that other identifiable information was found to be on the papers filed as the response and could therefore have been properly matched. As such, the papers were not matched.

Additionally, petitioner submits a copy of the response, which bears a certificate of mail dated April 27, 2007, and a copy of the post card receipt date stamped by the USPTO on April 30, 2007 as proof the response was timely filed.

In view of the evidence submitted, it can be concluded that a response to the Final Office Action was timely filed.

Accordingly, the Notice of Abandonment mailed August 22, 2007 was mailed in error and is hereby withdrawn. No petition fee is due and none has been charged.

This matter is being referred to Technology Center 3754 for a review of the response filed April 27, 2007 and resubmitted with the instant petition.

Telephone inquiries concerning this matter may be directed to the undersigned Petitions Attorney at (571) 272-3212.

Patricia Faison-Ball

Patricia Faison-Ball
Senior Petitions Attorney
Office of Petitions

21 JUN 2005

United States Patent and Trademark Office

#3

Commissioner for Patents
United States Patent and Trademark Office
P.O. Box 1450
Alexandria, VA 22313-1450
www.uspto.gov

Blank Rome LLP
600 New Hampshire Avenue
Suite 100
Washington, DC 20037

In re Application of	:	
Landers et al.	:	
Application No.: 10/535,926	:	
PCT No.: PCT/US03/37205	:	
Int. Filing Date: 20 November 2003	:	DECISION
Priority Date: 20 November 2002	:	
Attorney Docket No.: 119620-00108	:	
For: Isolation Of Sperm Cells From Other Biological	:	
Materials Using Microfabricated Devices And...	:	

The petition to revive under 37 CFR 1.137(b) filed 23 May 2005 in the above-captioned application is hereby **GRANTED** as follows:

Applicant states that ""the entire delay in filing the required reply from the due date for the required reply until the filing of a grantable petition pursuant to 37 CFR 1.137(b) was unintentional." This statement is being accepted in satisfaction of 37 CFR 1.137(b)(3).

A review of the application file reveals that the basic national fee of $300.00 was provided. The petition included authorization to charge the required petition fee of $750.00 to counsel's Deposit Account No. 23-2185. Thus, the requirements of 37 CFR 1.137(b) have been satisfied. Therefore, the request to revive the application abandoned under 35 U.S.C. 371(d) is granted as to the National stage in the United States of America.

This application is being forwarded to the United States Designated/Elected Office for further processing, including the preparation and mailing of a Notification of Missing Requirements (Form PCT/DO/EO/905) requiring the filing of an executed oath or declaration of the inventors and a surcharge under 37 CFR 1.492(h).

Leonard Smith
PCT Legal Examiner
PCT Legal Office

George M. Dombroske
PCT Legal Examiner
PCT Legal Office
Tel: (571) 272-3283
Fax: (571) 273-0459

UNITED STATES PATENT AND TRADEMARK OFFICE

Commissioner for Patents
United States Patent and Trademark Office
P.O. Box 1450
Alexandria, VA 22313-1450
www.uspto.gov

HAYNES AND BOONE, LLP
IP SECTION
2323 VICTORY AVENUE
SUITE 700
DALLAS, TX 75219

COPY MAILED

JUN 1 2 2009

OFFICE OF PETITIONS

In re Application of Rick Mansel Application No. 10/535,929 Filed: April 27, 2006 Attorney Docket No. 3616-0101	: : : : :	DECISION ON PETITION TO WITHDRAW FROM RECORD

This is a decision on the Request to Withdraw as attorney or agent of record under 37 C.F.R. § 1.36(b), filed June 27, 2006.

The request is **NOT APPROVED** because it is moot.

A review of the file record indicates that the power of attorney to practitioners associated with Haynes and Boone, LLP, has been revoked by the assignee of the patent application on July 17, 2006. Accordingly, the request to withdraw under 37 C.F.R. § 1.36(b) is moot.

All future communications from the Office will continue to be directed to the below-listed address until otherwise notified by applicant.

Telephone inquires concerning this decision should be directed to the undersigned at 571-272-6059.

A. Kelley

Alicia Kelley
Petitions Examiner
Office of Petitions

cc: ROTHWELL, FIGG, ERNST & MANBECK, P.C.
1425 K STREET, N.W.
SUITE 800
WASHINGTON, DC 20005

UNITED STATES PATENT AND TRADEMARK OFFICE

UNITED STATES DEPARTMENT OF COMMERCE
United States Patent and Trademark Office
Address: COMMISSIONER FOR PATENTS
P.O. Box 1450
Alexandria, Virginia 22313-1450
www.uspto.gov

APPLICATION NO.	FILING DATE	FIRST NAMED INVENTOR	ATTORNEY DOCKET NO.	CONFIRMATION NO.
10/535,932	05/20/2005	Satoru Nagamoto	13869.0038USWO	2676

52835 7590 09/18/2008
HAMRE, SCHUMANN, MUELLER & LARSON, P.C.
P.O. BOX 2902
MINNEAPOLIS, MN 55402-0902

EXAMINER
CHAPMAN, JEANETTE E

ART UNIT	PAPER NUMBER
3633	

MAIL DATE	DELIVERY MODE
09/18/2008	PAPER

Please find below and/or attached an Office communication concerning this application or proceeding.

The time period for reply, if any, is set in the attached communication.

UNITED STATES PATENT AND TRADEMARK OFFICE

UNDER SECRETARY OF COMMERCE FOR INTELLECTUAL PROPERTY AND
DIRECTOR OF THE UNITED STATES PATENT AND TRADEMARK OFFICE
WASHINGTON, DC 20231
www.uspto.gov

MAILED FROM
DIRECTORS OFFICE
SEP 18 2008
TECHNOLOGY CENTER

Hamre, Schumann, Mueller & Larson, P.C.
P.O. Box 2902
Minneapolis, MN 55402-0902

In re application of	:	DECISION ON REQUEST TO
Satoru Nagamoto et al.	:	PARTICIPATE IN PATENT
Application No. 10/535,932	:	PROSECUTION HIGHWAY
Filed: May 20, 2005	:	PROGRAM AND PETITION
For: UNDERFLOOR STORAGE	:	TO MAKE SPECIAL UNDER
STRUCTURE FOR VEHICLE	:	37 CFR 1.102(d)

This is a decision on the request to participate in the Patent Prosecution Highway (PPH) program and the petition under 37 CFR 1.102(d), filed January 7, 2008, to make the above-identified application special.

The request and petition are **DISMSSED AS MOOT**.

A grantable request to participate in the PPH pilot program and petition to make special require:

(1) The U.S. application must validly claim priority under 35 U.S.C. 119(a) to one or more applications filed in the JPO;
(2) Applicant must submit a copy of the allowable/patentable claim(s) from the JPO application(s) along with an English translation thereof and a statement that the English translation is accurate;
(3) All the claims in the U.S. application must sufficiently correspond or be amended to sufficiently correspond to the allowable/patentable claim(s) in the JPO application(s);
(4) Examination of the U.S. application has not begun;
(5) Applicant must submit a copy of all the Office actions from each of the JPO application(s) containing the allowable/patentable claim(s) along with an English translation thereof and a statement that the English translation is accurate;
(6) Applicant must submit an IDS listing the documents cited by the JPO examiner in the JPO Office action along with copies of documents except U.S. patents or U.S. patent application publications; and
(7) The required petition fee under 37 CFR 1.17(h).

The request to participate in the PPH is not grantable as per item (4) above in that examination of the U.S. application has already begun. A non-final rejection was mailed out on June 12, 2008.

No time period for reply to this decision is available since an Office action on the merits has already been mailed.

Telephone inquires concerning this decision should be directed to Teri P. Luu, Quality Assurance Specialist, at 571-272-7045. All other inquiries concerning the examination or status of the application should be directed to the Patent Application Information Retrieval (PAIR) system.

Teri P. Luu
Quality Assurance Specialist
Technology Center 3600

UNITED STATES PATENT AND TRADEMARK OFFICE

Commissioner for Patents
United States Patent and Trademark Office
P.O. Box 1450
Alexandria, VA 22313-1450
www.uspto.gov

MARSHALL, GERSTEIN & BORUN LLP
233 S. WACKER DRIVE, SUITE 6300
SEARS TOWER
CHICAGO, IL 60606

COPY MAILED

OCT 2 1 2008

OFFICE OF PETITIONS

In re Application of	:	
John COLLINGE, et al	:	
Application No. 10/535,938	:	DECISION ON PETITION
Filed: June 2, 2006	:	TO WITHDRAW
Attorney Docket No. 30699/41298	:	FROM RECORD
	:	

This is a decision on the Request to Withdraw as attorney or agent of record under 37 C.F.R. § 1.36(b), filed September 22, 2008.

The request is **APPROVED**.

A grantable request to withdraw as attorney/agent of record must be signed by every attorney/agent seeking to withdraw or contain a clear indication that one attorney is signing on behalf of another/others. The Office requires the practitioner(s) requesting withdrawal to certify that he, she, or they have: (1) given reasonable notice to the client, prior to the expiration of the response period, that the practitioner(s) intends to withdraw from employment; (2) delivered to the client or a duly authorized representative of the client all papers and property (including funds) to which the client is entitled; and (3) notified the client of any responses that may be due and the time frame within which the client must respond, pursuant 37 CFR 10.40(c).

The request was signed by David A. Gass on behalf of the attorneys of record associated with Customer No. 04743

The attorneys of record associated with Customer No. 04743 have been withdrawn.

Applicant is reminded that there is no attorney of record at this time.

All future correspondence from the Office will be forwarded to the address indicated below until other properly notified by the applicant.

In order to request or take action in a patent matter, the assignee must establish its ownership of the patent to the satisfaction of the Director. In this regard, a Statement under 37 CFR 3.73(b) must

have either: (i) documentary evidence of a chain of title from the original owner to the assignee (*e.g.,* copy of an executed assignment), and a statement affirming that the documentary evidence of the chain of title from the original owner to the assignee was or concurrently is being submitted for recordation pursuant to § 3.11; or (ii) a statement specifying where documentary evidence of a chain of title from the original owner to the assignee is recorded in the assignment records of the Office (*e.g.*, reel and frame number).

Telephone inquiries concerning this decision should be directed to the undersigned at 571-272-6735.

Diane Goodwyn
Petitions Examiner
Office of Petitions

cc: JOHN COLLINGE
MRC PRION UNIT, INSTITUTE OF NEUROLOGY
QUEEN SQUARE
LONDON
WCI 3BG UNITED KINGDOM

UNITED STATES PATENT AND TRADEMARK OFFICE

UNITED STATES DEPARTMENT OF COMMERCE
United States Patent and Trademark Office
Address: COMMISSIONER FOR PATENTS
P.O. Box 1450
Alexandria, Virginia 22313-1450
www.uspto.gov

BASF Performance Products LLC
Patent Department
540 White Plains Road
P.O. Box 2005
Tarrytown, NY 10591

Mail Date: 04/20/2010

Applicant	: Junichi Tanabe	: DECISION ON REQUEST FOR
Patent Number	: 7648738	: RECALCULATION of PATENT
Issue Date	: 01/19/2010	: TERM ADJUSTMENT IN VIEW
Appliction No	: 10/535,962	: OF WYETH AND NOTICE OF INTENT TO
Filed	: 04/18/2006	: ISSUE CERTIFICATE OF CORRECTION
		:

The Request for Recalculation is **GRANTED** to the extent indicated.

The patent term adjustment has been determined to be **916** days. The USPTO will *sua sponte* issue a certificate of correction reflecting the amount of PTA days determined by the recalculation.

Prior to the issuance of the certificate of correction, the USPTO will afford patentee an opportunity to be heard and request reconsideration. Accordingly, patentee has **one month or thirty (30) days**, whichever is longer, to file a request for reconsideration of this patent term adjustment calculation. See 35 U.S.C. 154(b)(3)(B)(ii) and 37 CFR 1.322(a)(4). No extensions of time will be granted under 37 CFR 1.136.

Patentee should use document code PET.OP if electronically filing a request for reconsideration of this patent term adjustment calculation. The patentee must also include the information required by 37 CFR 1.705(b)(2) and the fee required by 37 CFR 1.18(e). If patentee does not file a timely request for reconsideration of this patent term adjustment calculation including the information required by 37 CFR 1.705(b)(2) and the fee required by 37 CFR 1.18(e), the USPTO will issue a certificate of correction reflecting the PTA determination noted above.

Patentee should be aware that in order to preserve the right to review in the United States District Court for the District of Columbia of the USPTO patent term adjustment determination, patentee must ensure that he or she also take the steps required under 35 U.S.C. 154(b)(4)(A) in a timely manner. Nothing in the request for recalculation should be construed as providing an alternative time frame for commencing a civil action under 35 U.S.C. 154(b)(4)(A).

Any questions concerning this decision should be directed to the Office of Patent Legal Administration at 571-272-7702.

UNITED STATES PATENT AND TRADEMARK OFFICE

UNITED STATES DEPARTMENT OF COMMERCE
United States Patent and Trademark Office
Address: COMMISSIONER FOR PATENTS
P.O. Box 1450
Alexandria, Virginia 22313-1450
www.uspto.gov

HARNESS, DICKEY & PIERCE, P.L.C.
P.O. BOX 828
BLOOMFIELD HILLS, MI 48303

Mail Date: 04/21/2010

Applicant	: Haruhiko Ogiso	: DECISION ON REQUEST FOR
Patent Number	: 7626487	: RECALCULATION of PATENT
Issue Date	: 12/01/2009	: TERM ADJUSTMENT IN VIEW
Appliction No	: 10/535,980	: OF WYETH AND NOTICE OF INTENT TO
Filed	: 05/25/2005	: ISSUE CERTIFICATE OF CORRECTION
		:

The Request for Recalculation is **GRANTED** to the extent indicated.

The patent term adjustment has been determined to be **692** days. The USPTO will *sua sponte* issue a certificate of correction reflecting the amount of PTA days determined by the recalculation.

Prior to the issuance of the certificate of correction, the USPTO will afford patentee an opportunity to be heard and request reconsideration. Accordingly, patentee has **one month or thirty (30) days**, whichever is longer, to file a request for reconsideration of this patent term adjustment calculation. See 35 U.S.C. 154(b)(3)(B)(ii) and 37 CFR 1.322(a)(4). No extensions of time will be granted under 37 CFR 1.136.

Patentee should use document code PET.OP if electronically filing a request for reconsideration of this patent term adjustment calculation. The patentee must also include the information required by 37 CFR 1.705(b)(2) and the fee required by 37 CFR 1.18(e). If patentee does not file a timely request for reconsideration of this patent term adjustment calculation including the information required by 37 CFR 1.705(b)(2) and the fee required by 37 CFR 1.18(e), the USPTO will issue a certificate of correction reflecting the PTA determination noted above.

Patentee should be aware that in order to preserve the right to review in the United States District Court for the District of Columbia of the USPTO patent term adjustment determination, patentee must ensure that he or she also take the steps required under 35 U.S.C. 154(b)(4)(A) in a timely manner. Nothing in the request for recalculation should be construed as providing an alternative time frame for commencing a civil action under 35 U.S.C. 154(b)(4)(A).

Any questions concerning this decision should be directed to the Office of Patent Legal Administration at 571-272-7702.

UNITED STATES PATENT AND TRADEMARK OFFICE

Commissioner for Patents
United States Patent and Trademark Office
P.O. Box 1450
Alexandria, VA 22313-1450
www.uspto.gov

BACHMAN & LAPOINTE, P.C.
900 CHAPEL STREET
SUITE 1201
NEW HAVEN CT 06510

6/24/09

In re Application of:
VOSSEN, FRANZ
Serial No. 10/535,987
Filed: May, 23, 2005
Docket: 05353
Title: DEVICE FOR PUNCHING BLANKS OUT OF A FLAT SHEET

DECISION ON PETITION
UNDER 37 CFR § 1.181

This is a decision on the petition, filed June 17, 2009, under 37 CFR 1.181, to withdraw the holding of abandonment. The petition is being considered as a petition pursuant to 37 CFR 1.181(a). No fee is required.

The petition under 37 CFR 1.181 is GRANTED.

The present application was held abandoned for failure to timely respond to the Final Rejection mailed on June 18, 2008 which set forth a three-month period for reply. Notice of abandonment was mailed on April 1, 2009.

Petitioner argues however that a Notice of Appeal was electronically filed on December 17, 2008 with a three month extension of time fee and a RCE was later filed on June 17, 2009 with a four-month of extension time fee. A search of the application file and the USPTO records reveals that in fact, a Notice of Appeal was timely filed with a three- month extension of time on December 17, 2008. The RCE was also timely filed with a four-month extension of time fee.

Accordingly, the Notice of Abandonment mailed April 1, 2009 was mailed in error and is hereby withdrawn. The holding of abandonment is withdrawn. Any inconvenience or delay caused to applicant is regretted. This application is being forwarded to the examiner in Art Unit 3724 for appropriate action.

Robert Olszewski, Director
Technology Center 3700

UNITED STATES PATENT AND TRADEMARK OFFICE

UNITED STATES DEPARTMENT OF COMMERCE
United States Patent and Trademark Office
Address: COMMISSIONER FOR PATENTS
P.O. Box 1450
Alexandria, Virginia 22313-1450
www.uspto.gov

HARNESS, DICKEY & PIERCE, P.L.C.
P.O. BOX 828
BLOOMFIELD HILLS, MI 48303

Mail Date: 04/28/2010

Applicant	: Charles O Edwards	: DECISION ON REQUEST FOR
Patent Number	: 7611754	: RECALCULATION of PATENT
Issue Date	: 11/03/2009	: TERM ADJUSTMENT IN VIEW
Application No	: 10/535,997	: OF WYETH AND NOTICE OF INTENT TO
Filed	: 01/17/2006	: ISSUE CERTIFICATE OF CORRECTION
		:

The Request for Recalculation is **GRANTED** to the extent indicated.

The patent term adjustment has been determined to be **951** days. The USPTO will *sua sponte* issue a certificate of correction reflecting the amount of PTA days determined by the recalculation.

Prior to the issuance of the certificate of correction, the USPTO will afford patentee an opportunity to be heard and request reconsideration. Accordingly, patentee has **one month or thirty (30) days**, whichever is longer, to file a request for reconsideration of this patent term adjustment calculation. See 35 U.S.C. 154(b)(3)(B)(ii) and 37 CFR 1.322(a)(4). No extensions of time will be granted under 37 CFR 1.136.

Patentee should use document code PET.OP if electronically filing a request for reconsideration of this patent term adjustment calculation. The patentee must also include the information required by 37 CFR 1.705(b)(2) and the fee required by 37 CFR 1.18(e). If patentee does not file a timely request for reconsideration of this patent term adjustment calculation including the information required by 37 CFR 1.705(b)(2) and the fee required by 37 CFR 1.18(e), the USPTO will issue a certificate of correction reflecting the PTA determination noted above.

Patentee should be aware that in order to preserve the right to review in the United States District Court for the District of Columbia of the USPTO patent term adjustment determination, patentee must ensure that he or she also take the steps required under 35 U.S.C. 154(b)(4)(A) in a timely manner. Nothing in the request for recalculation should be construed as providing an alternative time frame for commencing a civil action under 35 U.S.C. 154(b)(4)(A).

Any questions concerning this decision should be directed to the Office of Patent Legal Administration at 571-272-7702.

1 1 MAY 2007

United States Patent and Trademark Office

Commissioner for Patents
United States Patent and Trademark Office
P.O. Box 1450
Alexandria, VA 22313-1450
www.uspto.gov

AKERMAN SENTERFITT
P.O. BOX 3188
WEST PALM BEACH, FL 33402-3188

In re Application of	:	
Van Den Broeck	:	
Application No.: 10/536,006	:	DECISION
PCT No.: PCT/BE03/00203	:	
Int. Filing Date: 24 November 2003	:	ON
Earliest Priority Date: 22 November 2002	:	
Attorney Docket No.: 4021-007	:	PETITION
For: Method For Determining A Track	:	
Of A Geographical Trajectory	:	

The petition to revive under 37 CFR 1.137(b) filed 29 November 2006 in the above-captioned application is hereby **GRANTED** as follows:

Applicant states that "the failure to respond was unintentional for the entire period from the due date of the response to the filing of a grantable petition." This is being construed as a statement that "the entire delay in filing the required reply from the due date for the required reply until the filing of a grantable petition under 37 CFR 1.137(b) was unintentional." Petitioner must notify the Patent and Trademark Office if such an interpretation of the statement is not correct. Said statement is being accepted in satisfaction of 37 CFR 1.137(b)(3).

A review of the application file reveals that applicant has filed the required reply in the form of an executed declaration in compliance with 37 CFR 1.497(a) and (b) (as well as the related surcharge under 37 CFR 1.492(h)), and has paid the petition fee. Thus, the requirements of 37 CFR 1.137(b) have been satisfied. Therefore, the request to revive the application abandoned under 35 U.S.C. 371(d) is granted as to the National stage in the United States of America.

This application is being forwarded to the United States Designated/Elected Office for further processing. The date of this application under 35 U.S.C. 371(c)(1), (2) and (4) is **29 November 2006**.

George Dombroske
PCT Legal Examiner
Office of PCT Legal Administration
Tel: (571) 272-3283
Fax: (571) 273-0459

UNITED STATES PATENT AND TRADEMARK OFFICE

Commissioner for Patents
United States Patent and Trademark Office
P.O. Box 1450
Alexandria, VA 22313-1450
www.uspto.gov

FOLEY & LARDNER LLP
150 EAST GILMAN STREET
P.O. BOX 1497
MADISON WI 53701-1497

COPY MAILED

AUG 0 4 2008

In re Application of	:	
Michael BUNCE, et al	:	
Application No. 10/536,048	:	DECISION ON PETITION
Filed: May 20, 2005	:	
Attorney Docket No. 044487-0178	:	

This is a decision on the petition under the unintentional provisions of 37 CFR 1.137(b), filed May 1, 2008, to revive the above-identified application.

The petition is **GRANTED**.

The application became abandoned for failure to reply in a timely manner to the non-final Office action mailed, June 12, 2007, which set a shortened statutory period for reply of three (3) months. No extensions of time under the provisions of 37 CFR 1.136(a) were obtained. Accordingly, the application became abandoned on September 13, 2007.

The petition satisfies the requirements of 37 CFR 1.137(b) in that petitioner has supplied (1) the reply in the form of an amendment, (2) the petition fee of $1,540; and (3) the required statement of unintentional delay.

It is not apparent whether the person signing the statement of unintentional delay was in a position to have firsthand or direct knowledge of the facts and circumstances of the delay at issue. Nevertheless, such statement is being treated as having been made as the result of a reasonable inquiry into the facts and circumstances of such delay. See 37 CFR 10.18(b) and Changes to Patent Practice and Procedure; Final Rule Notice, 62 Fed. Reg. 53131, 53178 (October 10, 1997), 1203 Off. Gaz. Pat. Office 63, 103 (October 21, 1997). In the event that such an inquiry has not been made, petitioner must make such an inquiry. If such inquiry results in the discovery that it is not correct that the entire delay in filing the required reply from the due date for the reply until the filing of a grantable petition pursuant to 37 CFR 1.137(b) was unintentional, petitioner must notify the Office.

There is no indication that the person signing the petition was ever given a power of attorney to prosecute the application. If the person signing the petition desires to receive future correspondence regarding this application, the appropriate power of attorney document must be submitted. While a courtesy copy of this decision is being mailed to the person signing the petition, all future correspondence will be directed to the address currently of record until appropriate instructions are received.

Telephone inquiries concerning this decision should be directed to Diane Goodwyn at (571) 272-6735.

This application is being referred to Technology Center AU 1634 for appropriate action by the Examiner in the normal course of business on the reply received May 1, 2008.

Thurman Page
Petitions Examiner
Office of Petitions

cc: PETER G. FOILES
5791 VAN ALLEN WAY
CARLSBAD, CA 92008

UNITED STATES PATENT AND TRADEMARK OFFICE

UNITED STATES DEPARTMENT OF COMMERCE
United States Patent and Trademark Office
Address: COMMISSIONER FOR PATENTS
P.O. Box 1450
Alexandria, Virginia 22313-1450
www.uspto.gov

MICHAEL BEST & FRIEDRICH LLP
100 E WISCONSIN AVENUE
Suite 3300
MILWAUKEE, WI 53202

Mail Date: 04/21/2010

Applicant	: Joachim Zimmer	: DECISION ON REQUEST FOR
Patent Number	: 7581278	: RECALCULATION of PATENT
Issue Date	: 09/01/2009	: TERM ADJUSTMENT IN VIEW
Appliction No	: 10/536,059	: OF WYETH AND NOTICE OF INTENT TO
Filed	: 05/24/2005	: ISSUE CERTIFICATE OF CORRECTION
		:

The Request for Recalculation is **GRANTED** to the extent indicated.

The patent term adjustment has been determined to be **1073** days. The USPTO will *sua sponte* issue a certificate of correction reflecting the amount of PTA days determined by the recalculation.

Prior to the issuance of the certificate of correction, the USPTO will afford patentee an opportunity to be heard and request reconsideration. Accordingly, patentee has **one month or thirty (30) days**, whichever is longer, to file a request for reconsideration of this patent term adjustment calculation. See 35 U.S.C. 154(b)(3)(B)(ii) and 37 CFR 1.322(a)(4). No extensions of time will be granted under 37 CFR 1.136.

Patentee should use document code PET.OP if electronically filing a request for reconsideration of this patent term adjustment calculation. The patentee must also include the information required by 37 CFR 1.705(b)(2) and the fee required by 37 CFR 1.18(e). If patentee does not file a timely request for reconsideration of this patent term adjustment calculation including the information required by 37 CFR 1.705(b)(2) and the fee required by 37 CFR 1.18(e), the USPTO will issue a certificate of correction reflecting the PTA determination noted above.

Patentee should be aware that in order to preserve the right to review in the United States District Court for the District of Columbia of the USPTO patent term adjustment determination, patentee must ensure that he or she also take the steps required under 35 U.S.C. 154(b)(4)(A) in a timely manner. Nothing in the request for recalculation should be construed as providing an alternative time frame for commencing a civil action under 35 U.S.C. 154(b)(4)(A).

Any questions concerning this decision should be directed to the Office of Patent Legal Administration at 571-272-7702.

UNITED STATES PATENT AND TRADEMARK OFFICE

Commissioner for Patents
United States Patent and Trademark Office
P.O. Box 1450
Alexandria, VA 22313-1450
www.uspto.gov
DIW Aug-05

Paper No. 4

BRINKS HOFER GILSON & LIONE
P.O. BOX 10395
CHICAGO IL 60610

COPY MAILED

AUG 2 4 2005

OFFICE OF PETITIONS

In re Application of	:	
Brian McMaster	:	
Application No. 10/536,071	:	DECISION ON PETITION
Filed: 30 May, 2003	:	
Atty Docket No. 10709/48	:	

This is a decision on the petition styled as a petition to accord a filing date under 37 CFR 1.53(b), filed on 30 June, 2005, which is treated as a petition under 37 CFR 1.53(e) and 1.10(e) to accord the above-identified application a filing date of 30 May, 2003.

The petition is granted.

Petitioner asserts that the above-identified application was filed on 30 May, 2003, but was subsequently lost in the U.S. Patent and Trademark Office. In support, petitioner presents a return postcard bearing a USPTO "Office-date" stamp dated 30 May, 2003. The postcard itemizes the filing of, *inter alia*, an application transmittal letter, 34 pages of specification, a preliminary amendment, and a declaration, and identifies the application by the inventor's name, attorney docket number, and the invention title. The petition was also accompanied by, *inter alia*, an application transmittal sheet, a copy of 34 pages of written description and claims (including one page of cover sheet), two preliminary amendments (one of which contains a Certificate of Mailing dated 19 September, 2003), and a declaration. It is noted that the application transmittal sheet and the other preliminary amendment contain Express Mail Label No. EV339773185US, a copy of which was supplied with the petition and shows a "date-in" of "53003". Petitioner requests that the application be accorded a filing date of 30 May, 2003, the date that the specification, including claims, and the first preliminary amendment were filed in the USPTO.

In view of petitioner's postcard receipt and the Express Mail Label, the evidence is convincing that the application papers deposited on 30 May, 2003, included, *inter alia*, 34 pages of written description and claims (including one page of cover sheet), as well as the first preliminary amendment, which were subsequently misplaced in the USPTO. It is noted that at least one claim relates to a process or method. Therefore, the application was complete on filing and entitled to a filing date of 30 May, 2003.

The preliminary amendment bearing a Certificate of Mailing dated 19 September, 2003, filed with the application papers will not be processed as a part of the original disclosure filed on 30 May, 2003.

In view of the above, the petition is granted. No petition fee is due and none has been charged.

The application has been assigned Application No. 10/536,071. All future correspondence regarding this application should reference this number.

The application file is being forwarded to the Office of Initial Patent Examination for further processing with a filing date of 30 May, 2003, using the copy of the specification and preliminary amendment bearing the above-identified Express Mail number supplied with the present petition.

Telephone inquiries specific to this matter should be directed to the undersigned at (571) 272-3231.

D Wood

Douglas I. Wood
Senior Petitions Attorney
Office of Petitions

31 AUG 2005

UNITED STATES PATENT AND TRADEMARK OFFICE

Commissioner for Patents
United States Patent and Trademark Office
P.O. Box 1450
Alexandria, VA 22313-1450
www.uspto.gov

BURNS, DOANE, SWECKER & MATHIAS, LLP
P.O. BOX 1404
ALEXANDRIA, VA 22313-1404

In re Application of MYRICK et al. Application No.: 10/536,072 PCT No.: PCT/US02/36762 Int. Filing Date: 13 November 2002 Priority Date: 14 May 2002 Attorney Docket No.: 033830-008 For: RAMP ASSEMBLY AND ASSOCIATED APPARATUS	DECISION ON PETITION UNDER 37 CFR 1.10(e)

This decision is in response to applicant's 10 June 2005 request to accept a copy of the U.S. national stage application for international application PCT/US02/36762 in lieu of the original application filed United States Patent and Trademark Office (USPTO) on 15 November 2004 and treated as a petition under 37 CFR §§1.181 and 1.10(e). No petition fee is required.

BACKGROUND

On 13 November 2002, applicant filed the above-identified international application which claimed a priority date of 14 May 2002. On 15 December 2003, a Demand was filed with the International Preliminary Examining Authority electing the United States. The election was made prior to the expiration of 19 months from the priority date, and as a result the deadline for entry into the national stage in the U.S. was extended to expire 30 months from the priority date, i.e. 14 November 2004 (a Sunday).

On 15 November 2004, applicant filed the U.S. national stage application for international application PCT/US02/36762. These papers were not assigned a U.S. serial number. Upon inquiry to the USPTO regarding the status of the national application, counsel was advised that the application papers could not be located.

On 10 June 2005, applicant attempted to refile copies of the national stage application as filed 15 November 2004, accompanied by a copy of the itemized postcard receipt with USPTO date-stamp 15 November 2004.

DISCUSSION

37 CFR 1.10(e) states:

Any person mailing correspondence addressed as set out in § 1.1(a) to the Office with sufficient postage utilizing the "Express Mail Post Office to Addressee" service of the USPS, but not received by the Office, may petition the Director to consider such correspondence filed in the

Office on the USPS deposit date, provided that:

(1) The petition is filed promptly after the person becomes aware that the Office has no evidence of receipt of the correspondence;

(2) The number of the "Express Mail" mailing label was placed on the paper(s) or fee(s) that constitute the correspondence prior to the original mailing by "Express Mail";

(3) The petition includes a copy of the originally deposited paper(s) or fee(s) that constitute the correspondence showing the number of the "Express Mail" mailing label thereon, a copy of any returned postcard receipt, a copy of the "Express Mail" mailing label showing the "date-in," a copy of any other official notation by the USPS relied upon to show the date of deposit, and, if the requested filing date is a date other than the "date-in" on the "Express Mail" mailing label or other official notation entered by the USPS, a showing pursuant to paragraph (d)(3) of this section that the requested filing date was the date the correspondence was deposited in "Express Mail Post Office to Addressee" service prior to the last scheduled pickup for that day; and

(4) The petition includes a statement which establishes, to the satisfaction of the Director, the original deposit of the correspondence, and that the copies of the correspondence, the copy of the "Express Mail" mailing label, the copy of any returned postcard receipt, and any official notation entered by the USPS are true copies of the originally mailed correspondence original "Express Mail" mailing label, returned postcard receipt, and official notation entered by the USPS.

The evidence submitted by applicant in the petition includes, *inter alia*, (1) a copy of the Customer Copy of the USPS Express Mail label bearing "Express Mail" label number EV588733188US showing a "Date In" of "11-15-04" and (2) a copy of the transmittal letter bearing Express Mail no. EV588733188US mailed on 15 November 2004. Applicant, in effect, requests that the apparent copy of the national stage application filed with the petition be accepted as a replacement for the missing original papers with a receipt date of 15 November 2004 being accorded thereto based on the alleged deposit of the originals with the U.S. Postal Service on 15 November 2004 using the "Express Mail Post Office to Addressee" service of the United States Postal Service (USPS).

A review of the USPTO date-stamped, itemized postcard receipt indicates, *inter alia*, that a transmittal letter bearing Express Mail No. EV588733188US, PCT application as filed, preliminary amendment, and declaration were deposited with the USPTO on 15 November 2004.

The evidence of record provided in accordance with 37 CFR 1.10(e) is sufficient to establish with reasonable certainty that the national stage application papers were deposited with the United States Postal Service as an "Express Mail" mailing on 15 November 2004. The indication of the same "Express Mail" label number appearing on the transmittal letter in the "Express Mail" certification and the copy of the customer copy "Express Mail" label together is proof that the national stage application papers were mailed via Express Mail on 15 November 2004. The transmittal letter bears Express Mail number "EV588733188US" sufficiently ties the national stage papers and the Express Mail mailing together. Accordingly, it is appropriate to accept the copy of the application as a replacement for the missing original application with a deposit date of 15 November 2004.

A review of the executed power of attorney submitted on 15 November 2004, reveals that it is not a declaration, does not identify each inventor, or state the residency, citizenship and mailing address of each inventor. Thus, the declaration is unacceptable and does not meet the requirements of 37 CFR 1.497(a) & (b). Applicant is advised that the surcharge for filing the declaration after the thirty month period has not been paid and is required.

CONCLUSION

The petition under 37 CFR 1.181 and 1.10(e) to reconstruct the file is **GRANTED**.

The copy of the declaration originally submitted on 15 November 2004 and resubmitted on 10 June 2005 is unacceptable and does not meet the requirements of 37 CFR 1.497(a) and (b).

The application will be forwarded to the United States Designated/Elected Office (DO/EO/US) for further processing including issuance of a Notification of Missing Requirements indicating that an oath or declaration, in compliance with 37 CFR 1.497(a) and (b), and the surcharge for filing the oath or declaration after the thirty month period, is required.

Cynthia M. Kratz

Cynthia M. Kratz
Attorney Advisor
Office PCT Legal Administration

Telephone: (571) 272-3286
Facsimile: (571) 272-0459

31 AUG 2005

UNITED STATES PATENT AND TRADEMARK OFFICE

Commissioner for Patents
United States Patent and Trademark Office
P.O. Box 1450
Alexandria, VA 22313-1450
www.uspto.gov

John C. Holman
Jacobson Holman PLLC
400 Seventh Street, N.W.
Washington, D.C. 20004

In re Application of DEL VAL CATALA, Sebastian U.S. Application No.: 10/536,074 Filing Date: 26 May 2005 Attorney Docket No.: P70534US0 For: HYGIENIC-PROTECTIVE LAMINAR COVER FOR CANNED DRINKS	DECISION ON PETITION UNDER 37 CFR 1.137(b)

This decision is in response to applicant's "Petition for Revival of an Application for Patent Abandoned Unintentionally under 37 CFR 1.37(b)" filed 26 May 2005 in the United States Patent and Trademark Office (USPTO).

BACKGROUND

On 04 August 2003, applicant filed international application PCT/ES03/00406 which claimed priority of an earlier application filed 08 August 2002. Pursuant to 37 CFR 1.495, the deadline for payment of the basic national fee in the United States was to expire 30 months from the priority date, 08 February 2005.

On 26 May 2005, applicant filed the present petition to revive pursuant to 37 CFR 1.137(b) accompanied by a continuation application.

DISCUSSION

A petition under 37 CFR 1.137(b) requesting that the application be revived on the grounds of unintentional abandonment must be accompanied by (1) the required reply, (2) the petition fee required by law, (3) a statement that the, "entire delay in filing the required reply from the due date for the reply until the filing of a grantable petition pursuant to this paragraph was unintentional" and (4) any terminal disclaimer and fee pursuant to 37 CFR 1.137(c) (where required).

Regarding item (1), applicant has supplied the proper reply in the form of the filing of a continuation application.

As to item (2), applicant has submitted the requisite petition fee and thus satisfying item (2).

Regarding item (3), applicant's statement that "entire delay in filing the required reply from the due date for the reply until the filing of a grantable petition pursuant to this paragraph was unintentional" satisfies this element.

As to Item (4), the terminal disclaimer is not required since this application was filed after 08 June 1995.

CONCLUSION

Applicant's petition to revive for the purposes of continuity only is **GRANTED**.

International application PCT/ES03/00406 is being revived for purposes of continuity only and since continuity has been established by this decision reviving the international application, the international application is again abandoned.

The application will be forwarded to Office of Initial Patent Examination for continued processing as an application under 35 U.S.C. 111(a).

Anthony Smith
Attorney-Advisor
Office of PCT Legal Administration
Tel: (571) 272-3298
Fax: (571) 273-0459

UNITED STATES PATENT AND TRADEMARK OFFICE

Commissioner for Patents
United States Patent and Trademark Office
P.O. Box 1450
Alexandria, VA 22313-1450
www.uspto.gov

SCHWEGMAN, LUNDBERG
WOESSNER & KLUTH, P.A.
P.O. BOX 2938
MINNEAPOLIS, MN 55402

COPY MAILED

SEP 01 2005

OFFICE OF PETITIONS

In re Application of :
Raccah et al. :
Application No. 10/536,076 :
Filed: November 30, 2004 : ON PETITION
For: METHOD AND SYSTEM TO PROVIDE :
WANTED AD LISTING WITHIN AN :
E-COMMERCE SYSTEM :

This is a decision on the Petition to Accord a Filing Date, filed August 19, 2005, which is treated as a petition under 37 CFR 1.10(e), requesting that the above-identified application be accepted and accorded a filing date of November 30, 2004.

The petition is **GRANTED**.

Applicants request the acceptance of the application with the filing date of November 30, 2004 on the basis that the application was purportedly deposited in Express Mail service (Express Mail mailing label #EV298564809US) on November 30, 2004, pursuant to the requirements of 37 CFR 1.10, and that the submission was not received by the Patent and Trademark Office.

In support, the petition is accompanied by a copy of the Express Mail mailing label, receipt no. EV298564809US, indicating a "Date-In" of November 30, 2004. The same Express Mail mailing number appears on the Patent Application Transmittal submitted with the instant petition.

The Office considers the date the correspondence is shown to have been deposited as "Express Mail" to be the "date-in" on the Express Mail mailing label. *See* MPEP 513. The date indicated on the "date-in" on the Express Mail mailing label verifies that the package was actually mailed. In view of the above, the evidence is convincing that the application was deposited as "Express Mail" with the US Postal Service on November 30, 2004. Accordingly, the application is accepted as filed on November 30, 2004.

Since the instant petition has been granted, no petition fee is due and none has been charged.

The application is being forwarded to Office of Initial Patent Examination for further processing.

Telephone inquiries concerning this matter should be directed to Petitions Attorney Derek L. Woods at (571) 272-3232.

Derek L. Woods
Attorney
Office of Petitions

17 OCT 2005

UNITED STATES PATENT AND TRADEMARK OFFICE

COMMISSIONER FOR PATENTS
UNITED STATES PATENT AND TRADEMARK OFFICE
P.O. BOX 1450
ALEXANDRIA, VA 22313-1450
www.uspto.gov

HAHN LOESER & PARKS, LLP
ONE GOJO PLAZA
SUITE 300
AKRON, OH 44311-1076

In re Application of OZAWA et al	:	
U.S. Application No.: 10/533,918	:	
PCT Application No.: PCT/JP03/14218	:	
Int. Filing Date: 07 November 2003	:	DECISION
Priority Date Claimed: 08 November 2002	:	
Attorney Docket No.: 2003.03.00008	:	
Title: ELECTROLYTE SOLUTION FOR	:	
ELECTROLYTIC CAPACITOR . . .	:	

This is in response to applicant's "Petition to Correct Transmittal Letter" filed 06 July 2005, which is being treated under 37 CFR 1.182.

BACKGROUND

On 07 November 2003, applicant filed international application PCT/JP03/14218, which claimed priority of an earlier Japan application filed 08 November 2002. A copy of the international application was communicated to the USPTO from the International Bureau on 21 May 2004. The thirty-month period for paying the basic national fee in the United States expired on 08 May 2005.

On 06 May 2005, applicant filed two sets of national stage papers in the United States Designated/Elected Office (DO/EO/US). Both sets of national stage papers included a document entitled "Transmittal Letter to the U.S. Designated Office (DO/US)--Entry into the U.S. National Stage Under Chapter I". One set of national stage papers identified the attorney docket number as "200303.00008", and the second set of national stage papers identified the attorney docket number as "200303.00010".

On 06 July 2005, applicant filed the present petition under 37 CFR 1.182.

DISCUSSION

The petition requests processing of the set of national stage papers associated with attorney docket number "200303.00008" under 35 U.S.C. 371 and also requests processing of the papers associated with attorney docket number "200303.00010" under 35 U.S.C. 111(a). Attorney docket number "200303.00008" will be associated with U.S. Application Number 10/533,918, the national stage of PCT/JP03/14218. U.S. Application Number 10/534,100 has been assigned to a different application and should no longer be referenced. Attorney docket number "200303.00010" has been associated with U.S. Application Number 10/536,078, filed under 35 U.S.C. 111(a).

CONCLUSION

The petition under 37 CFR 1.182 is GRANTED.

U.S. Application Number 10/533,918 is being forwarded to the United States Designated/Elected Office (DO/EO/US) for further processing in accordance with this decision, including preparation and mailing of a Notification of Missing Requirements under 35 U.S.C. 371 (Form PCT/DO/EO/905) indicating that a properly executed oath or declaration in compliance with 37 CFR 1.497 must be filed. U.S. Application Number 10/536,078 has been forwarded to the Office of Initial Patent Examination for processing under 35 U.S.C. 111(a).

Bryan Tung
PCT Legal Examiner
PCT Legal Office

Telephone: 571-272-3303
Facsimile: 571-273-0459

UNITED STATES PATENT AND TRADEMARK OFFICE

Commissioner for Patents
United States Patent and Trademark Office
P.O. Box 1450
Alexandria, VA 22313-1450
www.uspto.gov

Paper No. 9

MARK A MONTGOMERY
EASTMAN CHEMICAL COMPANY
PO BOX 511
KINGSPORT TN 37662

COPY MAILED

SEP 29 2005

OFFICE OF PETITIONS

In re Application of
Marc S. Somers
Application No. 08/435,072
Filed: May 5, 1995
Attorney Docket No. 70213

In re Application of
Marc S. Somers
Application No. 10/536,079
Filed: September 23, 1997
Attorney Docket No. N/A

ON PETITION

This decision addresses the petition under 37 CFR 1.181, filed October 22, 2003 in application no. 08/435,072. Petitioner requests that the Office acknowledge that a FWC of then copending application no. 08/435,072 was submitted on September 22, 1997 by issuing a filing receipt for the FWC application, that all papers pertaining to the FWC be placed in the appropriate file, and that the preliminary amendment submitted on September 22, 1997 be entered into the new FWC application.

Petitioner states that a FWC of application no. 08/435,072 was submitted on September 22, 1997. Petitioner states that the filing contained a power of attorney, a preliminary amendment, payment of $770.00 by deposit account, and an express abandonment of the parent application. These papers cannot be found in application no. 08/435,072 and a review of Office databases does not reveal that a 1.53(b) application file was created by mistake for the application papers. In short, the original copy of the papers cannot be located in the Office.

Petitioner filed a second preliminary amendment on certificate of mailing date June 28, 2000. This filing listed an incorrect application no., 09/019,746, but several other identifiers that corresponded to application no. 08/435,072, and any FWC if it had been created, were present. A date stamped postcard receipt proves the second preliminary amendment was received in the Office on July 6, 2000.

A non-final Office action was mailed on February 11, 2003 in application no. 08/435,072 that explicitly states it was created in response to a FWC. The content of the February 11, 2003 Office action does not point to the conclusion that the preliminary amendment submitted on September 22, 1997 or the second preliminary submitted on June 28, 2000 was considered.

Petitioner responded to this Office action on May 19, 2003. While the application no. listed on the May 19, 2003 amendment (09/019,746) was again incorrect, several other identifiers that would have corresponded to application no. 08/435,072, and any FWC if it had been created, were present. It should have been relatively simple to place the reply to the Office action in the appropriate file. It appears that this response was not matched up with the '072 file until after November 2004, when the Office deemed the application abandoned for failure to respond to the February 11, 2003 office action. After November 2004, the May 19, 2003 response was placed in application no. 08/435,072.

Petitioner filed the instant petition on October 22, 2003 (certificate of mailing date October 20, 2003).

As stated above, the original September 22, 1997 FWC request and the papers filed along with it cannot be located in the Office. However, petitioner has provided a date stamped itemized postcard receipt that proves a FWC, a power of attorney, a preliminary amendment, payment of $770.00 by deposit account, and an express abandonment of the parent application were received by the Office on mail room date September 23, 1997.

FWC practice was still in effect on September 23, 1997. Petitioner complied with Section 1.62. The papers received in the Office on September 23, 1997 should have been processed as a FWC. **The 37 CFR 1.62 application has been assigned application No. 10/536,079 with a filing date of September 23, 1997.**

To facilitate further processing, the undersigned has photocopied the original specification, claims, drawing, and oath from application no. 08/413,072 and placed it in application no. 10/536,079. In addition, the undersigned has transferred the first preliminary amendment filed September 23, 1997, the second preliminary amendment filed June 28, 2000, the non-final Office action of February 11, 2003, the reply of May 19, 2003 (certificate of mailing date May 12, 2003), an associate power of attorney filed certificate of mailing date July 1, 1998, and another associate power of attorney filed May 19, 2003 (certificate of mailing date May 12, 2003) to application no. 10/536,079.

Deposit account no. 05-0221 will be charged a $770.00 basic filing fee, as authorized by the FWC transmittal letter, filed September 23, 1997. This money will be placed in the financial records for application no. 10/536,079.

Thereafter, the application nos. 10/536,079 and 08/324,072 will be forwarded to the Initial Patent Examination Division. Application no. 10/536,079 will be processed (1) as a continuation application under 37 CFR 1.62 based on prior application No. 08/324,072, (2) with a filing date of September 23, 1997.

Telephone inquiries may be directed to the undersigned at (571) 272-3230.

E. Shirene Willis

E. Shirene Willis
Senior Petitions Attorney
Office of Petitions

03 OCT 2005

UNITED STATES PATENT AND TRADEMARK OFFICE

Commissioner for Patents
United States Patent and Trademark Office
P.O. Box 1450
Alexandria, VA 22313-1450
www.uspto.gov

Brian S. Steinberger
Law Offices of Brian S. Steinberger, P.A.
101 Brevard Avenue
Cocoa, Florida 32922

In re Application of:	:	
Walter **OPPLIGER**	:	DECISION ON
Application No.: 10/536,081	:	
Filing Date: 27 February 2004	:	PETITION
Attorney's Docket No.: PC-1674US	:	
For: **CIRCULAR SAW BLADE STRAIGHTENING**	:	UNDER 37 CFR 1.182
STRAIGHTENING MACHINE	:	

This is a decision on applicant's papers filed on 07 January 2005, which are being treated as a petition under 37 CFR 1.182 to convert a National stage application to an application filed under 35 U.S.C. 111(a).

BACKGROUND

On 05 May 2000, applicant filed international application PCT/CH00/00250, which designated the United States of America (U.S.) and claimed the priority of an application filed on 09 May 1999. No demand was filed for this application electing the U.S. prior to the 19 month deadline which expired at midnight on 05 December 2000. Accordingly the 20-month deadline for entry into the U.S. national stage expired at midnight on 05 January 2001.

On 27 February 2004, applicant filed national stage papers in the United States Designated/Elected Office (DO/EO/US) for PCT/CH00/00250 including a check for $920.00 to cover the basic national filing fee. Applicant had previously filed national stage papers for PCT/CH00/00250 and had appointed lawyers from another law firm to represent him before the USPTO. Applicant was informed of this fact through a letter to Mr. Brian S. Steinberger mailed on 04 November 2004. This letter warned applicant that the papers filed on 27 February 2004 would only be kept for 30 days and that the papers might be destroyed after that date.

On 07 January 2005 applicant filed by facsimile the instant "PETITION TO GRANT NATIONAL FILING STATUS UNDER 35 U.S.C. 111(a)" which is being treated as a petition under 37 CFR 1.182.

DISCUSSION

The papers applicant filed on 27 February 2004 were apparently destroyed sometime after 04 December 2004, pursuant to the warning in the above-noted 04 November 2004 letter to Mr. Brian S. Steinberger.

Consequently, applicant has filed a copy of those papers with the 07 January 2005 petition. This copy included: a declaration of inventor Oppliger dated 31 December 2004; a Form PTO-2038 authorizing a charge of $400.00 to Mr. Brian S. Steinberger's credit card; a copy of an "Express Mail" mailing label; a copy of Mr. Steinberger's check No. 6903 for $920.00; a copy of an unstamped postcard receipt; a copy of a transmittal letter to the USPTO with an "Express Mail" certificate thereon and dated 27 February 2004; a copy of a Form PTO-1390, a copy of the first page of the published PCT application for PCT/CH00/00250, and a copy of an English translation of the said international application.

Applicant is asking that the 27 February 2004 filing to be considered as a filing under 35 U.S.C. 111(a). The appropriate requirements of 37 CFR 1.53(b) are as follows.

37 CFR 1.53

> "(b) *Application filing requirements – Nonprovisional application.* The filing date of an application for patent filed under this section, except for a provisional application under paragraph (c) of this section or a continued prosecution application under paragraph (d) of this section, is the date on which a specification as prescribed by 35 U.S.C. 112 containing a description pursuant to § 1.71 and at least one claim pursuant to § 1.75, and any drawing required by § 1.81(a) are filed in the Patent and Trademark Office. . . ."

Thus, in order to obtain a filing date of 27 February 2004, applicant will have to establish that on that date, applicant had filed in the United States Patent and Trademark Office a specification as prescribed by 35 U.S.C. 112 containing a description pursuant to § 1.71, at least one claim pursuant to § 1.75 and any drawing required by § 1.81(a). The papers accompanying the 07 January 2005 petition clearly fulfill the above noted filing requirements, however, with the absence of the papers filed on 27 February 2004, as noted above, the applicant will have to establish exactly what was filed on that date. Specifically, the applicant will have to establish that papers satisfying the above-noted minimum requirements for a filing date were filed in the USPTO on 27 February 2004.

DECISION

For the reasons discussed above, the petition to convert is **DISMISSED**, without prejudice.

Any renewed petition should be entitled "Renewed Petition under 37 CFR 1.182" and should include applicant's proofs of the exact content of the 27 February 2004 filing. In addition any further correspondence with respect to this matter should be addressed to the Commissioner

for Patents, Mail Stop PCT, P.O. Box 1450, Alexandria, Virginia 22313-1450, with the contents of this letter marked to the attention of the PCT Legal Office.

Richard Cole
PCT Legal Examiner
PCT Legal Office

Paul A. Bell
PCT Special Programs Examiner
Telephone (571) 272-3278

02 OCT 2006

#5

UNITED STATES PATENT AND TRADEMARK OFFICE

Commissioner for Patents
United States Patent and Trademark Office
P.O. Box 1450
Alexandria, VA 22313-1450
www.uspto.gov

Brian S. Steinberger
Law Offices of Brian S. Steinberger, P.A.
101 Brevard Avenue
Cocoa, Florida 32922

In re Application of:	
Walter **OPPLIGER**	DECISION ON
Application No.: 10/536,081	
Filing Date: 27 February 2004	RENEWED PETITION
Attorney's Docket No.: PC-1674US	
For: CIRCULAR SAW BLADE STRAIGHTENING MACHINE	UNDER 37 CFR 1.182

This is a decision on applicant's RENEWED PETITION UNDER 37 CFR 1.182 TO GRANT NATIONAL FILING STATUS UNDER 35 U.S.C. 111(a) filed on 26 October 2005.

BACKGROUND

On 05 May 2000, applicant filed international application PCT/CH00/00250, which designated the United States of America (U.S.) and claimed the priority of an application filed on 09 May 1999. No demand was filed for this application. Accordingly, the 20-month deadline for entry into the U.S. national stage expired at midnight on 05 January 2001.

On 27 February 2004, applicant's attorney, Brian S. Steinberger, filed national stage papers in the United States Patent and Trademark Office (USPTO) for PCT/CH00/00250. These papers were assigned application serial number 10/487,722. Applicant had previously filed national stage papers for PCT/CH00/00250 and had appointed lawyers from another law firm to represent him before the USPTO. This previous national stage application was assigned application serial No. 10/110,086.

On 04 November 2004, applicant was informed of these facts in a letter to Brian S. Steinberger (hereinafter the Steinberger letter). This letter contained the following warning regarding application No. 10/487,722: "The papers that you filed on 27 February 2004 will be held at PCT Legal Administration for 30 days. If no response is filed, they may be destroyed."

On 07 January 2005 applicant filed a "PETITION TO GRANT NATIONAL FILING STATUS UNDER 35 U.S.C. 111(a)" which was treated as a petition under 37 CFR 1.182. This petition was assigned application serial No. 10/536,081. The petition included a copy of a declaration and power of attorney executed by Walter Oppliger on 31 December 2004 and

directed to the invention entitled "CIRCULAR SAW BLADE STRAIGHTENING MACHINE, the specification of which was filed on 2/27/2004" (hereinafter, the December 2004 Declaration).

On 03 October 2005 a decision on petition dismissing the 07 January 2005 petition was mailed to applicant for application serial No. 10/536,081.

On 26 October 2005, applicant filed this petition entitled "RENEWED PETITION UNDER 37 CFR 1.182 TO GRANT NATIONAL FILING STATUS UNDER 35 U.S.C. 111(a)

DISCUSSION

In October of 2005 an extensive search was made to locate the papers filed on 27 February 2004 (application serial No. 10/487,772). They could not be located and were presumed destroyed as per the above-noted warning in the Steinberger letter. Thus, the 03 October 2005 decision in application serial No. 10/536,081, dismissed the petition on the grounds that the papers filed on 27 February 2004 were not available and there was insufficient evidence presented with the 07 January 2005 petition to establish what was actually received in the USPTO on 27 February 2004. Specifically, there was insufficient evidence to establish that on 27 February 2004, applicant had filed in the United States Patent and Trademark Office a specification as prescribed by 35 U.S.C. 112 containing a description pursuant to 37 CFR 1.71, at least one claim pursuant to 37 CFR 1.75 and any drawing required by 37 CFR 1.81(a).

The renewed petition filed on 26 October 2005 contains various papers, correspondence and arguments concerning the 27 February 2004 filing (application serial No. 10/487,722) and the requisite petition fee as set forth in 37 CFR 1.17(f). The renewed petition also presents a copy of the papers filed on 27 February 2004. The renewed petition asks that these papers be considered to have been filed in the USPTO on 27 February 2004, that the said papers be treated as a filing under 35 U.S.C. 111(a) and that the December 2004 Declaration be made of record in this application.

The correspondence and arguments filed on 26 October 2005 are now moot with regard to the issue of what was actually filed on 27 February 2004, because the papers filed on 27 February 2004 and assigned application No. 10/487,722 have been located. The application serial No. for these papers application was never entered into the USPTO electronic data base, because it purported to be a national stage filing for PCT/CH00/00250 and another national stage application (application No. 10/110,086) had already been filed for this international application.

The papers in application serial No. 10/487,722 included: a Form PTO-1390 (two sheets); a copy of the first page of the published PCT application for PCT/CH00/00250; a seven page specification in English for the invention entitled "Circular saw blade straightening machine"; two sheets of claims with seven claims thereon; an abstract sheet; 3 sheets of drawings with six drawing figures thereon; a copy of a European Search Report for EP 03 01 0216 comprising 6 sheets; a cover letter for the filing signed by Brian S. Steinberger; and a check for $920.

The appropriate requirements of 37 CFR 1.53(b) are as follows.

"(b) *Application filing requirements – Nonprovisional application.* The filing date of an application for patent filed under this section, except for a provisional application under paragraph (c) of this section or a continued prosecution application under paragraph (d) of this section, is the date on which a specification as prescribed by 35 U.S.C. 112 containing a description pursuant to § 1.71 and at least one claim pursuant to § 1.75, and any drawing required by § 1.81(a) are filed in the Patent and Trademark Office. . . ."

As noted above, the actual papers filed on 27 February 2004 (application serial No. 10/487,722) include a seven page specification, seven claims and six drawing figures. Thus, these papers clearly fulfill the requirements of 37 CFR 1.53(b) for obtaining a filing date.

Applicant is also asking that the December 2004 Declaration, be made of record in this application. The renewed petition indicates that the applicant will suffer irreparable harm if this relief is not granted. In regard to this matter it is noted that the December 2004 Declaration includes a foreign priority claim to European Application 0300458.3 filed 28 February 2003 and to European Application 03010216.4 filed 6 May 2003.

DECISION

For the reasons discussed above, the petition is **GRANTED**.

The papers filed on 27 February 2004 are granted a filing date under 35 U.S.C. 111(a) and 37 CFR 1.53(b) of **27 February 2004**.

The December 2004 Declaration has been made of record in this application.

All papers in file of 10/487,772 will be transferred to the file of 10/536,081 and the serial number 10/487,772 will be deactivated. All future communications regarding this application should use the application serial number **10/536,081**.

This application will be forwarded to the Office of Initial Patent Examination for further processing under 35 U.S.C. 111(a).

Any further correspondence with respect to this matter should be addressed to the Commissioner for Patents, Mail Stop PCT, P.O. Box 1450, Alexandria, Virginia 22313-1450, with the contents of this letter marked to the attention of the PCT Legal Office.

Richard Cole
PCT Legal Examiner
PCT Legal Administration

Paul A. Bell
PCT Special Programs Examiner
Telephone (571) 272-3278

UNITED STATES PATENT AND TRADEMARK OFFICE

COMMISSIONER FOR PATENTS
UNITED STATES PATENT AND TRADEMARK OFFICE
P.O. BOX 1450
ALEXANDRIA, VA 22313-1450
www.uspto.gov
DIW Nov-05

SIMYON ROZENBERG
9/29 SAN MARTIN STR.
LOD 71279
ISRAEL

COPY MAILED
NOV 30 2005
OFFICE OF PETITIONS

In re Application of	:	
Simyon Rozenberg	:	
Application No. 10/536,089	:	ON PETITION
Filed: 3 November, 2005	:	
For: FUEL IGNITION SYSTEM FOR	:	
JET ENGINE STARTING	:	

This is a decision in reference to the communication filed on 3 November, 2005, and received in the Office of Petitions on 15 November, 2005,[1] which is treated as a petition under 37 CFR 1.53(e) requesting that the papers filed therewith be treated as an application and accorded a filing date 18 April, 2005.

The petition is **DISMISSED.**

On 3 November, 2005, an envelope containing an application transmittal sheet, a specification consisting of 11 pages of written description, three (3) pages containing five (5) claims, one (1) page of abstract, one (1) sheet of drawings, was filed in the USPTO.

The envelope also contained the present petition, asserting that the application had been filed on 18 April, 2005, but was lost after receipt at the USPTO. In support, petitioners have provided a copy of Israel Postal Authority postcard with a USPTO Mail Center Received date of April 18, 2005.

[1] A review of the papers filed with the petition reveals that the envelope containing the papers contains an "Office-date" stamp of 3 November, 2005, from the USPTO Mail Center. The petition papers were stamped 15 November, 2005, upon receipt in the Office of Petitions.

The application papers have been assigned Application No. 10/536,089. All future correspondence should reference this application number.

The instant petition is not a proper petition because it has not been signed by the inventor or a registered patent attorney.[2] However, since the petition was received with the application papers which were signed by the applicant, the petition will be considered to be ratified by that signature.

The petition lacks the required fee. A request to change the filing date of, or accord a filing date to, an application must be made by way of a petition under 37 CFR 1.53 accompanied by the petition fee set forth in 37 CFR 1.17(f) (currently $400.00).[3] Patent and trademark fees and charges payable to the Patent and Trademark Office are required to be paid in advance, that is, at the time of requesting any action by the Office for which a fee or charge is payable.[4] As such, the petition fee is a prerequisite to the filing of the present petition, and the Office will not reach the merits of the petition unless and until the petition fee is submitted. However, as the request was filed with the initial application papers, it is appropriate to address the issues raised in the petition to the extent provided. Any renewed petition, however, must include the proper petition fee.

37 CFR 1.53 states, in pertinent part:

> (a) Application filing requirements - Nonprovisional application.
>
> The filing date of an application for patent filed under this section, except for a provisional application under paragraph (c) of this section or a continued prosecution application under paragraph (d) of this section, is the date on which a specification as prescribed by 35 U.S.C. 112 containing a description pursuant to § 1.71 and at least one claim pursuant to § 1.75, and any drawing required by § 1.81(a) are filed in the Patent and Trademark Office. No new matter may be introduced into an application after its filing date. A continuing application, which may be a continuation, divisional, or continuation-in-part

---

[2] 37 CFR 1.33(b)(5). See MPEP 403.

[3] MPEP 506.02 and 37 CFR 1.53(e).

[4] 37 CFR 1.22(a).

> application, may be filed under the conditions specified in 35 U.S.C. 120, 121 or 365(c) and § 1.78(a).
>
> ...
>
> (e) Failure to meet filing date requirements.
>
> (1) If an application deposited under paragraph (b), (c), or (d) of this section does not meet the requirements of such paragraph to be entitled to a filing date, applicant will be so notified, if a correspondence address has been provided, and given a period of time within which to correct the filing error. If, however, a request for an application under paragraph (d) of this section does not meet the requirements of that paragraph because the application in which the request was filed is not a design application, and if the application in which the request was filed was itself filed on or after June 8, 1995, the request for an application under paragraph (d) of this section will be treated as a request for continued examination under § 1.114.
> (2) Any request for review of a notification pursuant to paragraph (e)(1) of this section, or a notification that the original application papers lack a portion of the specification or drawing(s), must be by way of a petition pursuant to this paragraph accompanied by the fee set forth in § 1.17(f). In the absence of a timely (§ 1.181(f)) petition pursuant to this paragraph, the filing date of an application in which the applicant was notified of a filing error pursuant to paragraph (e)(1) of this section will be the date the filing error is corrected.

Petitioner's arguments have been considered, but are not persuasive. The U.S. Patent and Trademark Office (Office) file is the official record of the papers originally filed in this application. A review of the papers originally filed reveals that no application papers for Application No. 10/536,089 were received on 18 April, 2005. An applicant alleging that a paper was filed in the Office and later misplaced has the burden of proving the allegation by a preponderance of the evidence. The fact that petitioners believe that the application was (or should have been) received in the Office on 18 April, 2005, is not more persuasive than the date the papers are shown to have been received in the official file.

Where the records of the Office (e.g. the file of the application) contain any document(s) or fee(s) corresponding to the contents of the correspondence at issue, the Office will rely upon its official record of the contents of such correspondence in the absence of convincing evidence (e.g. a postcard receipt under MPEP 503 containing specific itemization of the document(s) or fee(s) purported to have been filed with the correspondence at issue) that the Office received and misplaced any document(s) or fee(s) that is not among the official records of the Office. If a new application is being filed, all parts of the application being submitted should be separately listed on the postcard, *e.g.,* the number of pages of specification (including written description, claims and abstract) number of claims, number of sheets of drawings, number of pages of oath/declaration. The postcard receipt will not serve as *prima facie* evidence of receipt of any item which is not adequately itemized on the postcard.[5]

Petitioner's argument has been considered, but is not persuasive. The postcard showing an Office-date stamp of 18 April, 2005, does not itemize the filing of a specification, claims, or even an application for patent. Further, the tracking number on the postcard from the Israel Post Office does not appear on any of the application papers filed with the petition. Therefore, there is no way to link the postcard received at the USPTO on 18 April, 2005, with the application papers. In summary, although petitioner may have shown that an envelope was received in the USPTO on 18 April, 2005, petitioner has not provided evidence that the envelope received in the USPTO on 18 April, 2005, contained the instant application papers.

At best, the showing of record reveals an intent to file the application papers on 18 April, 2005.

In summary, by statute the filing date of a nonprovisional application is the date that a specification and a drawing are received in the USPTO. As petitioners have not provided sufficient evidence that the application was received in the USPTO on 18 April, 2005, the application papers are not entitled to a filing date of 18 April, 2005.

The address on the petition is different than the correspondence address of record. A copy of this decision will be forwarded to

---

[5] MPEP 503.

the address on the petition. All future correspondence will be sent solely to the address of record.

Further correspondence with respect to this matter should be addressed as follows:

By mail: Mail Stop Petition
Commissioner for Patents
P.O. Box 1450
Alexandria, VA 22313-1450

By FAX: (571) 273-8300
Attn: Office of Petitions

By hand: Customer Service Window
Mail Stop Petition
Randolph Building
401 Dulany Street
Alexandria, VA 22314

The application is being forwarded to the Office of Initial Patent Examination for further processing with a filing date of 3 November, 2005.

Telephone inquiries related to this decision should be directed to the undersigned at 571-272-3231.

DWood

Douglas I. Wood
Senior Petitions Attorney
Office of Petitions

cc: Alexander Rosenberg
235 E. 13th Street, Apt. 6J
New York NY 10013

13 DEC 2005

UNITED STATES PATENT AND TRADEMARK OFFICE

Commissioner for Patents
United States Patent and Trademark Office
P.O. Box 1450
Alexandria, VA 22313-1450
www.uspto.gov

Stanilaus Aksman
Hunton & Williams
1900 K Street, NW
Washington, DC 20006-1109

In re Application of	:	
BONNE, Adam	:	
U.S. Application No. 10/532,071	:	
PCT No.: PCT/DK03/00713	:	DECISION
Int. Filing Date: 21 October 2003	:	
Priority Date: 21 October 2002	:	
Attorney Docket No.: 55320.001021	:	
For: A SAFETY VALVE	:	

This decision is in response to "Petition under 37 CFR 1.182 to Remove Portion of Preliminary Amendment From the National Phase Application and Accord a Separate Application Status to an Application Filed under 35 U.S.C. 111(a)" filed 22 August 2005. The $400 petition fee has been charged to Deposit Account no. 50-0206.

BACKGROUND

On 21 October 2003, applicants filed international application PCT/DK03/00713 which claimed a priority date of 21 October 2002. A copy of the international application was communicated to the United States Patent and Trademark Office from the International Bureau on 29 April 2004. Pursuant to 37 CFR 1.495, the thirty-month time period for submitting the requisite basic national fee in the United States of America was to expire 30 months from the priority date, 21 April 2005.

On 21 April 2005, applicants filed the present application. The application papers filed therewith included a "Transmittal letter for U.S. National Patent Application": an authorization to charge Deposit Account no. 50-0206 $1800 (the basic national filing fee of $300, the examination fee of $200, and the search fee of $500); a copy of the international application, a Preliminary Amendment under 37 CFR 1.115; and an unexecuted declaration.

On 22 August 2005, applicants filed the present "Petition under 37 CFR 1.182 to Remove Portion of Preliminary Amendment From the National Phase Application and Accord a Separate Application Status to an Application Filed under 35 U.S.C. 111(a)" which included: a copy of the international application; a copy of the Preliminary Amendment filed 21 April 2005; a Second Preliminary Amendment under 37 CFR 1.115; and a Supplemental Preliminary Amendment under 37 CFR 1.115 for a New Application under 35 U.S.C. 111(a).

DISCUSSION

Any intended filing of an international application as a national stage application must clearly and unambiguously be identified as such and must satisfy all of the conditions set forth in 35 U.S.C. 371(c). See 37 CFR 1.494(f):

> The documents and fees submitted . . . must be clearly identified as a submission to enter the national stage under 35 U.S.C. 371, otherwise the submission will be considered as being made under 35 U.S.C. 111.

In addition, section 1893.03(a) of the MPEP states that:

> If there are any conflicting instructions as to whether the filing is under 35 U.S.C. 111(a) or 35 U.S.C. 371, the application will be accepted as filed under 35 U.S.C. 111(a).

As noted above, applicants' original Transmittal Letter, filed 21 April 2005, specifically identified the accompanying submission as a submission to enter the national stage under 35 U.S.C. 371. No contradictory instructions were submitted. Accordingly, application 10/532,071 was appropriately created as a national stage application under 35 U.S.C. 371.

However, despite the statement in the Preliminary Amendment filed 21 April 2005 that no new matter was included in the amendment, the present petition states that the 21 April 2005 submission may have included new matter. Specifically, the petition states that "[a] second preliminary amendment under 37 CFR 1.115 reflecting the changes is filed herewith. Applicant request these changes out of abundance of caution because an argument could be raised that the new claim . . . contained new matter." Subject matter beyond that disclosed in the international application cannot be entered in a national stage filing under 35 U.S.C. 371. Thus, in order for the additional subject matter included with the 21 April 2005 submission to be granted a 21 April 2005 filing date, applicants must submit a grantable petition seeking to have the disclosure of 21 April 2005 treated as a continuation-in-part application under 35 U.S.C. 111(a).

The petition herein included the required petition fee. It was filed with a copy of the complete disclosure required to complete the application, that is, the specification, claims, drawings, and preliminary amendment which contain the disclosure from the international application and the added subject matter. These materials provide all the requirements for a grantable petition.

The materials submitted with the petition will be treated as a continuation-in-part application, assigned U.S. Application number 10/536,090. Application Number 10/532,071 will continue to be processed as a national stage under 35 U.S.C. 371.

Any period of adjustment to the term of a patent under 35 U.S.C. 154(b) in either application number 10/532,071 or 10/536,090 may be reduced by the period of time beginning on the filing date accorded under 35 U.S.C. 111 and ending on the mailing date of this decision.

CONCLUSION

Applicants' petition under 37 CFR 1.182 is **GRANTED**.

The papers attached to the petition, originally filed on 22 August 2005, will be treated as a separate U.S. application filed under 35 U.S.C. 111(a) as a continuation-in-part of international application PCT/DK03/00713. This application will be assigned application number 10/536,090 and will be assigned a filing date of 21 April 2005.

The papers relating to application number 10/536,090 are being forwarded to the Office Of Initial Patent Examination for further processing in accord with this decision. A copy of the petition and this decision will be forwarded to application no. 10/536,090.

Anthony Smith
Attorney-Advisor
Office of PCT Legal Administration
Telephone: (571) 272-3298
Facsimile: (571) 273-0459

Leonard Smith
PCT Legal Examiner
Office of PCT Legal Administrator

UNITED STATES PATENT AND TRADEMARK OFFICE

Commissioner for Patents
United States Patent and Trademark Office
P.O. Box 1450
Alexandria, VA 22313-1450
www.uspto.gov

Hunton & Williams LLP
Intellectual Property Department
Suite 1200
1900 K Street N.W.
Washington DC 20006-1109

COPY MAILED

DEC 04 2007

OFFICE OF PETITIONS

In re Application of	:	
Bonne et al.	:	
Application No. 10/536090	:	ON PETITION
Filing or 371(c) Date: 04/21/2005	:	
Attorney Docket No. 55320.001021	:	

This Decision is in response to a "Petition Under 37 CFR § 1.182 and Request to Withdraw Notice of Incomplete Nonprovisional Application," filed October 22, 2007.

The petition is granted.

Background

Application papers in the above-identified application were deposited on April 21, 2005. This Office mailed a Notice of Incomplete Nonprovisional Application (Notice) on August 21 and 22nd, 2007, informing Applicant that the a filing date had NOT been accorded the application because the application had been deposited without drawings. The Notice also stated that the filing fee was missing. In addition, the August 21, 2007 Notice stated that the oath or declaration was unsigned.

The present petition

In response to the Notice, Applicant files the present petition and avers that drawings, the filing fee and oath/declaration were included among the application papers filed on April 21, 2007. In support of this assertion, Applicant files a copy of the application papers putatively-filed on April 21, 2005, and a copy of his return-receipt postcard. Applicant also cites to a Petition filed August 22, 2005, and a Decision on the Petition, mailed December 13, 2005. Applicant cites to the Decision on Petition and avers that the Decision "stated, in pertinent part, that the August 22, 2005 Petition included a copy of the complete disclosure needed to complete the CIP application, i.e. the specification, claims, drawings, and preliminary amendment." Applicant notes that the Decision further stated that the 'materials submitted with the petition will be treated as a continuation-in-part application, assigned U.S. Application number 10/536,090' and will be assigned a filing date of April 21, 2005. Applicant further provide that on March 10, 2006, Applicant filed an executed Declaration.

The application file

A review of the application file reveals that this Office received two sheets of drawings on April 21, 2005. Office records further reveal that an executed declaration and power of attorney were filed on March 10, 2006, along with the late filing oath or declaration surcharge.

In view of the above, the Notices mailed August 21 and 22nd, 2007, were mailed in error and are hereby withdrawn.

A refund of the petition fee has been credited to Applicant's deposit account as authorized in the petition.

It is noted that Office records do not indicate that the application filing fees have paid in the application.

This application is being referred to the Office of Patent Examination Processing, for

- withdrawal of the Notices mailed August 21 and 22nd, 2007
- charging applicant's deposit account the appropriate filing; search; examination, and additional claim fees, and
- for further processing, with the filing date of April 21, 2005, using the application papers filed on that date.

Telephone inquiries concerning this matter should be directed to the undersigned at (571-272-3232.

Derek L. Woods
Attorney
Office of Petitions

UNITED STATES PATENT AND TRADEMARK OFFICE

Commissioner for Patents
United States Patent and Trademark Office
P.O. Box 1450
Alexandria, VA 22313-1450
www.uspto.gov

DAVIDSON, DAVIDSON & KAPPEL, LLC
485 SEVENTH AVENUE, 14TH FLOOR
NEW YORK, NY 10018

COPY MAILED
DEC 15 2005
OFFICE OF PETITIONS

In re Application of :
Grossman, et al. :
Application No. 10/536,091 :
Filed: April 22, 2005 :
Attorney Docket No. 567.1004CON4 :

ON PETITION

This is a decision on the "Petition to Establish Filing Date Under 37 CFR 1.10(e)," filed December 7, 2005.

Please note, the papers submitted December 7, 2005, have been assigned application number 10/536,091. Please direct all future correspondence to this application number.

Petitioners allege that the application was deposited in Express Mail service on April 22, 2005. In support, the petition is accompanied by a copy of Express Mail Receipt No. EV319073847US (the same Express Mail number found on the original application papers located in the official file) showing a "date in" of April 22, 2005. Petitioner requests that the application be accorded a filing date of April 22, 2005.

The Office considers the date the paper or fee is shown to have been deposited as "Express Mail" to be the "Date In" on the Express Mail label. *See* MPEP 515. That is the date that verifies that the package was actually mailed. In view of the above, the evidence is convincing that the application was deposited as "Express Mail" with the US Postal Service on April 22, 2005.

The petition is GRANTED.

Accordingly, the application is entitled to a filing date of April 22, 2005.

The application is being returned to the Office of Initial Patent Examination for processing with a filing date of April 22, 2005 and issuance of a filing receipt.

Telephone inquiries concerning this matter may be directed to the undersigned at (571) 272-3228.

Edward J. Tannouse
Petitions Attorney
Office of Petitions
Office of the Deputy Commissioner
for Patent Examination Policy

14 MAR 2006

#2

UNITED STATES PATENT AND TRADEMARK OFFICE

Commissioner for Patents
United States Patent and Trademark Office
P.O. Box 1450
Alexandria, VA 22313-1450
www.uspto.gov

MERCK & CO., INC.
Patent Department, RY60-30
PO Box 2000
126 East Lincoln Avenue
Rahway, NJ 07065-0970

In re Application of: GOBLE, Stephen, D., et al.
U.S. App. No.: 10/536,092
Filing Date: 15 October 2004
Attorney's Docket No.: 21220PI
For: BENZOXAZINYL-AMIDOCYLCOPENTYL-HETROCYCLIC MODULATORS OF CHEMOKINE RECEPTORS

DECISION ON PETITION UNDER 37 CFR 1.182

This decision is issued in response to applicants' "Petition Under 37 CFR 1.182 To Treat Application Filed Under 35 U.S.C. 371 As Application Filed Under 35 U.S.C. 111(a)" filed 23 May 2005 and supplemented on 07 March 2006. Applicant has paid the required petition fee.

BACKGROUND

On 09 April 2004, applicants filed international application PCT/US04/11281, which claimed a priority date of 15 April 2003 and designated the United States. The deadline for submission of the basic national fee was thirty months from the priority date, i.e., 15 October 2005.

On 15 October 2004, applicants filed a Transmittal Letter for entry into the national stage in the United States accompanied by, among other materials, payment of the basic national fee and a Preliminary Amendment. These materials were assigned U.S. application number 10/511,614. The application was created as a national stage of PCT/US04/11281 filed under 35 U.S.C. 371.

Although the amendment filed 15 October 2004 did not expressly state that it included new subject matter, the present petition states that the amended specification filed by applicants includes additional matter that was not disclosed in the international application.

On 23 May 2005, applicants filed the "Petition Under 37 CFR 1.182 To Treat Application Filed Under 35 U.S.C. 371 As Application Filed Under 35 U.S.C. 111(a)" considered herein. The petition requests that the present application be treated as a filing under 35 U.S.C. 111(a) so as to provide the added subject matter disclosed in the 15 October 2004 filing with a filing date of 15 October 2004.

On 20 September 2005, applicants filed a Communication requesting that action be taken on the previously filed petition.

On 07 March 2006, applicants submitted a facsimile communication considered herein as a supplement to the present petition.

DISCUSSION

Any intended filing of an international application as a national stage application must clearly and unambiguously be identified as such and must satisfy all of the conditions set forth in 35 U.S.C. 371(c). See 37 CFR 1.495(g):

> The documents and fees submitted ... must be clearly identified as a submission to enter the national stage under 35 U.S.C. 371, otherwise the submission will be considered as being made under 35 U.S.C. 111.

In addition, section 1893.03(a) of the MPEP states the following:

> If there are any conflicting instructions as to whether the filing is under 35 U.S.C. 111(a) or 35 U.S.C. 371, the application will be accepted as filed under 35 U.S.C. 111(a).

Applicants' original Transmittal Letter, filed 15 October 2004, specifically identified the accompanying submission as a submission to enter the national stage under 35 U.S.C. 371. No contradictory instructions were submitted. Accordingly, application 10/511,614 was appropriately created as a national stage of PCT/US04/11281 filed under 35 U.S.C. 371.

However, as noted above, the present petition states that the application (i.e., substitute specification) filed with the 15 October 2004 submission included additional subject matter not supported by the original disclosure of the international application. Subject matter beyond that disclosed in the international application cannot be added to a national stage application. See 35 U.S.C. 132(a); PCT Article 41(2).

In light of the above, applicants have submitted a petition under 37 CFR 1.182 to have the submission filed 15 October 2004 treated as an application filed under 35 U.S.C. 111(a). Petitioner states that it was applicants' intention to file the 15 October 2004 submission as a continuation-in-part application of the international application, rather than as a national stage submission; that such error was inadvertent; and that the requested relief is necessary to preserve the filing date of the newly added subject matter. The petition included the required petition fee and authorizes a charge to Deposit Account No. 13-2755 for any required fees.

The petition is granted as follows. The "substitute" specification, which includes claims, filed 15 October 2004 will be treated as a separate U.S. application filed under 35 U.S.C. 111(a). This application has been assigned U.S. application number 10/536,092 and is accorded a filing date of 15 October 2004.

Applicants are advised to consider the requirements under 37 CFR 1.78 for claiming benefit of the prior filed international and provisional applications, should the benefit of such applications be desired.

Application number 10/511,614 will continue to be processed as a national stage application under 35 U.S.C. 371.

Any period of adjustment to the term of the patent under 35 U.S.C. 154(b)(May 29,2000) in application number 10/536,092 may be reduced by the period of time beginning on the filing date accorded under 35 U.S.C. 111(a) and ending on the mailing date of this decision.

CONCLUSION

Applicants' petition under 37 CFR 1.182 is **GRANTED** to the extent that the substitute specification filed 15 October 2004 with the national stage papers will be removed from the application file of 10/511,614 and will be treated as a separate U.S. application filed under 35 U.S.C. 111(a). This separate application has been assigned U.S. application number 10/536,092 and is accorded a filing date of 15 October 2004.

Application number 10/511,614 will continue to be processed as a national stage application under 35 U.S.C. 371. A copy of this decision will be placed in application number 10/511,614.

Deposit Account No. 13-2755 will be charged the required filing fee for application number 10/536,092.

Application number 10/536,092 is being referred to the Office Of Initial Patent Examination for processing as an application filed under 35 U.S.C. 111(a) having a filing date of 15 October 2004.

Boris Milef
Legal Examiner
Office of PCT Legal Administration

Richard M. Ross
PCT Petitions Attorney
Office of PCT Legal Administration
Telephone: (571) 272-3296
Facsimile: (571) 273-0459

RMR/BM

UNITED STATES PATENT AND TRADEMARK OFFICE

COMMISSIONER FOR PATENTS
UNITED STATES PATENT AND TRADEMARK OFFICE
P.O. BOX 1450
ALEXANDRIA, VA 22313-1450
www.uspto.gov

Paper No. 3

Thomas J. Perkowski, Esq.
Soundview Plaza
1266 East Main Street
Stamford, CT 06902

COPY MAILED

DEC 21 2005

OFFICE OF PETITIONS

In re Application of :
Thomas J. Perkowski :
Application No. 10/536,093 : ON PETITION
Filed: December 30, 2004 :
Attorney Docket Number: 100-005USANC0 :

This is a decision on the Petition, filed May 9, 2005, requesting that the above-identified application be accepted and accorded a filing date of December 30, 2004.

The petition is **GRANTED**.

Applicants request the acceptance of the application with the filing date of December 30, 2004, on the basis that the application was purportedly deposited in Express Mail service (Express Mail mailing label #EV515400140US) on December 30, 2004, pursuant to the requirements of 37 CFR 1.10, and that the submission was not received by the Patent and Trademark Office.

A review of Office records reveals that application papers for the above-identified application were received in this Office on December 30, 2004, but not processed.

In view of the above, the petition is granted. No petition fee is due and none has been charged.

The application is being forwarded to Office of Initial Patent Examination for further processing.

Telephone inquiries concerning this matter should be directed to the undersigned at 571-272-3232.

Derek L. Woods
Attorney
Office of Petitions

UNITED STATES PATENT AND TRADEMARK OFFICE

Commissioner for Patents
United States Patent and Trademark Office
P.O. Box 1450
Alexandria, VA 22313-1450
www.uspto.gov

Paper No. 3

Bereskin & Parr
Manulife Corporate Park
6733 Mississauga Road
Suite 600
Mississauga, Ontario L5N 6J5
CANADA

COPY MAILED

FEB 13 2006

OFFICE OF PETITIONS

In re Application of	:	
David Frank	:	ON PETITION
Application No. 10/536,096	:	
Filed: April 1, 2005	:	
Attorney Docket No. 9351-516	:	

This is a decision on the petition filed December 15, 2005, requesting that an application, entitled "Apparatus For And Method Of Forming Seals In An Electrochemical Cell Assembly," be assigned an application number and accorded a filing date of April 1, 2005.

Applicant alleged that the original application papers were filed in the United States Patent and Trademark Office (USPTO) on April 1, 2005. In support of the allegation, applicant submitted a copy of a postcard receipt with a date-stamp of April 1, 2005. The postcard acknowledged the receipt of the following items in the USPTO: "1. Transmittal Letter (1 page); 2. Patent Application Specification (57 pages); 3. Drawings (26 pages); and 4. Stamped, Self-addressed Postcard for Return Receipt by the USPTO with Assigned Serial Number." Additionally, applicant submitted a copy of the application papers purportedly filed on April 1, 2005, with the present petition.

The original application papers submitted on April 1, 2005, have not been located. In view of the official record and the evidence presented,[1] the petition to accord the application papers a filing date of April 1, 2005, is granted.

[1] See MPEP 503.

Because the original application papers (specification, claims and drawings) cannot be located in the USPTO, the duplicate papers supplied on December 15, 2005, will be used for examination purposes. The application has been assigned Application No. 10/536,096.

Applicant should notify this Office if the original application papers are subsequently discovered in the USPTO so that the present file can be merged with the original papers and any duplicate fees refunded. All correspondence concerning this application should be directed to Application No. 10/536,096.

The $400.00 petition fee charged to applicant's Deposit Account is unnecessary and will be refunded.

Application No. 10/536,096 will be forwarded to the Office of Initial Patent Examination for further processing with a **filing date of April 1, 2005**, using the copy of the original application papers submitted with the present petition. **Additionally, the Office of Initial Patent Examination is directed to mail a Notice to File Missing Parts of Nonprovisional Application because applicant did not submit an oath or declaration or pay the statutory basic filing fee upon filing the above-identified application.**

Telephone inquiries should be directed to the undersigned at (571) 272-3211.

Christina Tartera Donnell

Christina Tartera Donnell
Senior Petitions Attorney
Office of Petitions

16 JUN 2006

#3

UNITED STATES PATENT AND TRADEMARK OFFICE

Commissioner for Patents
United States Patent and Trademark Office
P.O. Box 1450
Alexandria, VA 22313-1450
www.uspto.gov

CURTIS J. OLLILA
SETTER OLLILA, LLC
2060 BROADWAY, SUITE 300
BOULDER, CO 80302

In re Application of WALKER et al. Application No.: 10/536,099 PCT No.: PCT/US03/16043 Int. Filing Date: 21 May 2003 Priority Date: None Attorney Docket No.: 35010/147US For: FLOW METER MONITORING AND DATA LOGGING SYSTEM	DECISION ON PETITION UNDER 37 CFR 1.10(e)

This decision is in response to applicant's 27 February 2006 request to accept a copy of the U.S. national stage application for international application PCT/US03/16043 in lieu of the original application filed United States Patent and Trademark Office (USPTO) on 17 November 2005 under petition under 37 CFR §1.10(e). No petition fee is required.

BACKGROUND

On 21 May 2003, applicant filed the above-identified international application which claimed a priority date of 17 December 2002. The deadline for entry into the national stage in the U.S. was extended to expire 30 months from the priority date, i.e. 21 November 2005.

On 17 November 2005, applicant filed the U.S. national stage application for international application PCT/US03/16043. These papers were not assigned a U.S. serial number. Upon inquiry to the USPTO regarding the status of the national application, counsel was advised that the application papers could not be located.

On 03 January and 27 February 2006, applicant attempted to refile copies of the national stage application as filed 17 November 2005, accompanied by a copy of the itemized postcard receipt with USPTO date-stamp 15 November 2005.

DISCUSSION

37 CFR 1.10(e) states:

Any person mailing correspondence addressed as set out in § 1.1(a) to the Office with sufficient postage utilizing the "Express Mail Post Office to Addressee" service of the USPS, but not received by the Office, may petition the Director to consider such correspondence filed in the

Office on the USPS deposit date, provided that:

(1) The petition is filed promptly after the person becomes aware that the Office has no evidence of receipt of the correspondence;

(2) The number of the "Express Mail" mailing label was placed on the paper(s) or fee(s) that constitute the correspondence prior to the original mailing by "Express Mail";

(3) The petition includes a copy of the originally deposited paper(s) or fee(s) that constitute the correspondence showing the number of the "Express Mail" mailing label thereon, a copy of any returned postcard receipt, a copy of the "Express Mail" mailing label showing the "date-in," a copy of any other official notation by the USPS relied upon to show the date of deposit, and, if the requested filing date is a date other than the "date-in" on the "Express Mail" mailing label or other official notation entered by the USPS, a showing pursuant to paragraph (d)(3) of this section that the requested filing date was the date the correspondence was deposited in "Express Mail Post Office to Addressee" service prior to the last scheduled pickup for that day; and

(4) The petition includes a statement which establishes, to the satisfaction of the Director, the original deposit of the correspondence, and that the copies of the correspondence, the copy of the "Express Mail" mailing label, the copy of any returned postcard receipt, and any official notation entered by the USPS are true copies of the originally mailed correspondence original "Express Mail" mailing label, returned postcard receipt, and official notation entered by the USPS.

The evidence submitted by applicant in the petition includes, *inter alia*, (1) a copy of the Customer Copy of the USPS Express Mail label bearing "Express Mail" label number EV513119957US showing a "Date In" of "11-17-05" and (2) a copy of the itemized certificate of mailing bearing Express Mail no. EV513119957US mailed on 17 November 2005. Applicant, in effect, requests that the apparent copy of the national stage application filed with the petition be accepted as a replacement for the missing original papers with a receipt date of 17 November 2005 being accorded thereto based on the alleged deposit of the originals with the U.S. Postal Service on 17 November 2005 using the "Express Mail Post Office to Addressee" service of the United States Postal Service (USPS).

The evidence of record provided in accordance with 37 CFR 1.10(e) is sufficient to establish with reasonable certainty that the national stage application papers were deposited with the United States Postal Service as an "Express Mail" mailing on 17 November 2005. The indication of the same "Express Mail" label number appearing on the transmittal letter in the "Express Mail" certification and the copy of the customer copy "Express Mail" label together is proof that the national stage application papers were mailed via Express Mail on 17 November 2005. The certificate of mailing bears Express Mail number "EV513119957US" sufficiently ties the national stage papers and the Express Mail mailing together. Accordingly, it is appropriate to accept the copy of the application as a replacement for the missing original application with a deposit date of 17 November 2005.

A review of the executed declaration submitted on 17 November 2005, reveals that it identifies each inventor, or state the residency, citizenship and mailing address of each inventor. Thus, the declaration is acceptable and meets the requirements of 37 CFR 1.497(a) & (b).

CONCLUSION

The petition under 37 CFR 1.10(e) to reconstruct the file is **GRANTED**. U.S. serial number 10/536,099 is the national stage application of PCT/US03/16043.

The copy of the declaration originally submitted on 17 November 2005 and resubmitted on 26 February 2006 is acceptable and meets the requirements of 37 CFR 1.497(a) and (b).

The application will be forwarded to the United States Designated/Elected Office (DO/EO/US) for further processing. The 35 U.S.C. 371(c)(1), (c)(2) and (c)(4) date is 17 November 2005.

Cynthia M. Kratz
Attorney Advisor
Office PCT Legal Administration

Telephone: (571) 272-3286
Facsimile: (571) 272-0459

#4

UNITED STATES PATENT AND TRADEMARK OFFICE

Commissioner for Patents
United States Patent and Trademark Office
P.O. Box 1450
Alexandria, VA 22313-1450
www.uspto.gov

19 SEP 2006

Gabriela Materassi
Novozymes North America
500 Fifth Avenue
Suite 1600
New York, New York 10110

In re Application of
SVENDSEN et al.
U.S. App. No. 10/536,101
PCT No.: PCT/DK04/00558
Int. Filing Date: 23 August 2004
Priority Date: 22 August 2003
Attorney Docket No.: 10424.204-US
For: FUNGAL ALPHA-AMYLASE VARIANTS

DECISION ON PETITION
UNDER 37 CFR 1.182

This decision is issued in response to applicant's "Petition under 37 CFR 1.182" filed 01 August 2006 and applicant's "Supplemental Petition under 37 CFR 1.182" filed 08 September 2006 to amend the International Application number listed on the Transmittal Letter filed 22 February 2006. The requisite $400 petition fee will be charged to Deposit Account no. 50-1701, as authorized.

BACKGROUND

On 23 August 2004, applicant filed international application no. PCT/DK04/00558 which claimed a priority date of 22 August 2003, and designated the United States. A copy of the international application was communicated to the United States Patent and Trademark Office from the International Bureau on 03 March 2005. Pursuant to 37 CFR 1.495, the deadline for entry into the national stage in the United States expired 30 months from the priority date, on 22 February 2005.

On 22 February 2005, applicant filed a "Transmittal Letter to the United States Designated/Elected Office Concerning a Filing under 35 U.S.C. 371" accompanied by, among other materials: an authorization to charge deposit account the basic national fee; an application data sheet; a preliminary amendment; and a copy of the international application for PCT/DK04/00558. However, the "Transmittal Letter to the United States Designated/Elected Office Concerning a Filing under 35 U.S.C. 371" submitted by the applicant misidentified the international application number as PCT/DK04/00559. It is noted that Transmittal Letter otherwise properly identified the title, inventors, international filing date, and priority date for the intended PCT application (PCT/DK04/00558).

Based on the erroneous international application number listed on the Transmittal Letter, the present national stage application papers were placed in U.S. serial number 10/569,242, the national stage application of PCT/DK04/00559.

On 01 August 2006, applicant filed "Petition under 37 CFR 1.182."

On 08 September 2006, applicant filed "Supplemental Petition under 37 CFR 1.182."

DISCUSSION

In the present petition, applicant confirms that the listing of PCT/DK04/00559 on the original Transmittal Letter was an error, and that it was applicant's intent for the Transmittal Letter to refer to PCT/DK04/00558 as listed on the application data sheet, executed declaration, and preliminary amendment, which accompanied the original Transmittal Letter. Applicant has provided the required $400 petition fee to correct the error on the Transmittal Letter filed 22 February 2006. Accordingly, the petition under 37 CFR 1.182 is granted. This national stage file (10/536,101) is the national stage of PCT/DK04/00558.

CONCLUSION

The petition under 37 CFR 1.182 is **GRANTED**.

This application is being returned to the United States Designated/Elected Office (US/DO/EO) for continued processing including: (1) correcting USPTO records so as to identify the present application as a national stage of PCT/DK04/00558; (2) removing all documents pertaining to PCT/DK04/00558 from application no. 10/569,242; and (3) if appropriate, issuing a Notification of Acceptance and Official Filing Receipt..

Anthony Smith
Attorney-Advisor
Office of PCT Legal Administration
Telephone: (571) 272-3298
Facsimile: (571) 273-0459

UNITED STATES PATENT AND TRADEMARK OFFICE

Commissioner for Patents
United States Patent and Trademark Office
P.O. Box 1450
Alexandria, VA 22313-1450
www.uspto.gov

JAS IP CONSULTING
343 SECOND STREET, SUITE F
LOS ALTOS , CA 94022

COPY MAILED
OCT 1 2 2006
OFFICE OF PETITIONS

In re Application of :
William Wong et al. :
Application No. 10/536,102 : DECISION GRANTING PETITION
Filed: January 20, 2006 :
Attorney Docket No. 20051960-US-NP :

This is a decision on the petition filed September 18, 2006 regarding a lost application which is treated under 37 CFR 1.10(e)[1] .

The petition under 37 CFR 1.10 is GRANTED.

Petitioner asserts that the above-identified application was filed January 20, 2006 by Express Mail. Petitioner claims that no filing receipt or application serial number has been received on the papers filed January 20, 2006.

In support of the averments made, petitioner presents a copy of the Express Mail label, receipt No. ED889772773US, showing a date-in of, January 20, 2006. The same Express Mail receipt number was referred to on the itemized Patent Application Transmittal sheet submitted with the present petition. The application transmittal sheet itemizes the filing of the application with a specification, drawings and an Oath or Declaration. The petition is also accompanied by a copy of the transmittal letter,

---

[1] 37 CFR 1.10(e) provides that:

Any person mailing correspondence properly addressed to the Office with sufficient postage utilizing "Express Mail Post Office to Addressee" service of the USPS but not received by the Office, may petition the Commissioner to consider such correspondence filed in the Office on the USPS deposit date, provided that:

(1) The petition is filed promptly after the person becomes aware that the Office has no evidence of receipt of the correspondence;

(2) The number of the "Express Mail" mailing label was placed on the paper(s) or fee(s) that constitute the correspondence prior to the original mailing by "Express Mail";

(3) The petition includes a copy of the originally deposited paper(s) or fee(s) that constitute the correspondence showing the number of the "Express Mail" mailing label thereon, a copy of any returned postcard receipt, a copy of the "Express Mail" mailing label showing the "date-in," a copy of any other official notation by the USPS relied upon to show the date of deposit, and, if the requested filing date is a date other than the "date-in" on the "Express Mail" mailing label or other official notation entered by the USPS, a showing pursuant to paragraph (d)(3) of this section that the requested filing date was the date the correspondence was deposited in the "Express Mail Post Office to Addressee" service prior to the last scheduled pickup for that day; and

(4) The petition includes a statement which establishes, to the satisfaction of the Commissioner, the original deposit of the correspondence and that the copies of the correspondence, the copy of the "Express Mail" mailing label, the copy of any returned postcard receipt, and any official notation entered by the USPS are true copies of the originally mailed correspondence, original "Express Mail" mailing label, returned postcard receipt, and official notation entered by the USPS.

application including the specification, drawings, Oath or Declaration and the fee transmittal, asserted to have been filed January 20, 2006. Petitioner requests that the application be accorded a filing date of January 20, 2006, the date that the application including the specification, drawings and Oath or Declaration were filed in the USPTO. Based on the evidence present in the file, it is concluded that the present application was filed in the USPTO but was subsequently misplaced in the Office. However, pursuant to 37 CFR 1.10, the Office considers the date the paper or fee is shown to have been deposited as "Express Mail" to be the "date-in" on the Express Mail label.[2] That is the date that verifies that the package was actually mailed. In view of the above, the evidence is convincing that the application was deposited as "Express Mail" with the USPS on January 20, 2006.

Accordingly, the petition to accord application a filing date is GRANTED.

In accepting this petition, the Office is construing the remarks made by counsel as a declaration that the application papers submitted with the present petition are true copies of the documents that were originally mailed, and that the documents were originally deposited on the date indicated on the Express Mail mailing label. Petitioners **must** notify the Office if this is an incorrect interpretation.

Please note the application number assigned to this application and refer to this number when corresponding with the USPTO regarding this application. Applicant should also notify this office if the original papers are subsequently discovered in the PTO so that the present duplicate file can be merged with the original papers and any duplicate filing fee refunded.

The filing fee has been charged to deposit account no. 24-0037 as authorized on the fee transmittal.

The application is being forwarded to the Office of Initial Patent Examination for further processing with a filing date of January 20, 2006, using the copy of the application papers supplied on September 18, 2006.

Telephone inquiries related to this decision should be directed to the undersigned Petitions Attorney at (571) 272-3212.

Patricia Faison-Ball

Patricia Faison-Ball
Senior Petitions Attorney
Office of Petitions

---

[2]MPEP 513.

#3

UNITED STATES PATENT AND TRADEMARK OFFICE

Commissioner for Patents
United States Patent and Trademark Office
P.O. Box 1450
Alexandria, VA 22313-1450
www.uspto.gov

28 FEB 2007

Eric B. Meyertons
Meyertons, Hood, Kivilin, Kowert & Goetzel, P.C.
P.O. Box 398
Austin, Texas 78767-0398

In re Application of:
LANDRIEVE, Franck
Application No.: 10/536,105
PCT No.: PCT/FR04/02542
International Filing Date: 08 October 2004
Priority Date: 22 October 2003
Attorney Docket No.: 5310-09600
For: MULTI-REVOLUTION ABSOLUTE HIGH RESOLUTION ROTATION MEASUREMENT SYSTEM AND BEARING EQUIPPED WITH SUCH A SYSTEM

DECISION ON PETITION

This decision is in response to applicants' "Petition under 37 CFR 1.10(e) for Correspondence Never Received" filed on 27 September 2006 and 14 December 2006 which are being treated as a petition under 37 CFR 1.10(e) to reconstruct the application and accord a receipt date of 14 April 2006 to the above-identified U.S. National stage application. No petition fee is required.

BACKGROUND

On 08 October 2004, applicants filed international application PCT/FR04/02542 which claimed a priority date of 22 October 2003. A copy of the international application was communicated to the United States Patent and Trademark Office from the International Bureau on 12 May 2005. Pursuant to 37 CFR 1.495, the deadline for payment of the basic national fee in the United States was to expire 30 months from the priority date, 22 April 2006.

On 14 April 2006, applicants allegedly submitted a Transmittal Letter to the United States Designated/Elected Office (DO/EO/US) Concerning a Filing Under 35 U.S.C. 371" which included: an authorization to charge deposit account number 50-1505 the requisite basic national fee; a translation of the international patent application; a copy of the International Publication (WO 2005/043088); a preliminary amendment; a substitute specification; a copy of the International Preliminary Examination Report; a copy of the International Search Report; and a postcard receipt.

On 27 September 2006 and 14 December 2006, applicants filed the present petition forwarding copies of papers filed in the above-identified application on 14 April 2006 which included: a Transmittal Letter to the United States Designated/Elected Office (DO/EO/US) Concerning a Filing Under 35 U.S.C. 371; an authorization to charge deposit account number 50-1505 the requisite basic national fee; a translation of the international patent application; a copy of the International Publication (WO 2005/043088); a preliminary amendment; a substitute specification; a copy of the International Preliminary Examination Report; a copy of the International Search Report; and a postcard receipt. These submissions were assigned U.S. application number 10/536,105.

DISCUSSION

Applicants state in the present petition that the U.S. National Stage application was mailed via United States Express Mail to the USPTO on 14 April 2006.

37 CFR 1.10 (e) states:

> Any person mailing correspondence addressed as set out in § 1.1(a) to the Office with sufficient postage utilizing the "Express Mail Post Office to Addressee" service of the USPS, but not received by the Office, may petition the Commissioner to consider such correspondence filed in the Office on the USPS deposit date, provided that:
>
> (1) The petition is filed promptly after the person becomes aware that the Office has no evidence of receipt of the correspondence;
>
> (2) The number of the "Express Mail" mailing label was placed on the paper(s) or fee(s) that constitute the correspondence prior to the original mailing by "Express Mail;"
>
> (3) The petition includes a copy of the originally deposited paper(s) or fee(s) that constitute the correspondence showing the number of the "Express Mail" mailing label thereon, a copy of any returned postcard receipt, a copy of the "Express Mail" mailing label showing the "date-in," a copy of any other official notation by the USPS relied upon to show the date of deposit, and, if the requested filing date is a date other than the "date-in" on the "Express Mail" mailing label or other official notation entered by the USPS, a showing pursuant to paragraph (d)(3) of this section that the requested filing date was the date the correspondence was deposited in "Express Mail Post Office to Addressee" service prior to the last scheduled pickup for that day; and
>
> (4) The petition includes a statement which establishes, to the satisfaction of the Commissioner, the original deposit of the correspondence, and that the copies of the correspondence, the copy of the "Express Mail" mailing label, the copy of any returned postcard receipt, and any official notation entered by the USPS are true copies of the originally mailed correspondence and original "Express Mail" mailing label, returned postcard receipt, and official notation entered by the USPS.

Applicants have satisfied Items (1) through (4). The evidence of record is sufficient to establish with reasonable certainty that the national stage application was deposited

with the United States Postal Service as an "Express Mail" Mailing on 14 April 2006.

CONCLUSION

For the reasons discussed above, applicants' petition under 37 CFR 1.10(e) is **GRANTED** and the receipt date for transmittal letter and accompanying papers will be accorded a date of 14 April 2006.

Applicants should use application number **10/536,105** in all future communications with the United States Patent and Trademark Office in regards to the U.S. national stage of international application PCT/FR04/02542.

This application is being forwarded to the United States Designated/Elected Office (US/DO/EO) for continued processing including the issuance of a Notification of Missing Requirements (Form PCT/DO/EO/905) indicating that an oath or declaration along with the $130 surcharge for filing the oath or declaration after the thirty-month period is required.

Anthony Smith
Attorney-Advisor
Office of PCT Legal Administration
Tel: (571) 272-3298
Fax: (571) 273-0459

15 FEB 2007

UNITED STATES PATENT AND TRADEMARK OFFICE

#3

Commissioner for Patents
United States Patent and Trademark Office
P.O. Box 1450
Alexandria, VA 22313-1450
www.uspto.gov

LAW OFFICE OF MORRIS E. COHEN
1122 CONEY ISLAND AVENUE
SUITE 217
BROOKLYN NY 11230

In re Application of:	:	
HAKIM, Nouri, E.	:	DECISION ON PETITION
U.S. Application No.: 10/536,106	:	
PCT No.: PCT/US2003/024400	:	
International Filing Date: 05 August 2003	:	
Priority Date: 05 August 2002	:	
Atty Docket No.: 4009.052.301	:	
For: NO-SPILL DRINKING PRODUCTS	:	

This decision is issued in response to the "Status Letter" filed 02 February 2007, treated herein as a petition under 37 CFR 1.181 to have the national stage application papers filed by applicant on 07 February 2005 processed as a separate national stage application. No petition fee is required.

BACKGROUND

On 05 August 2003, applicant filed international application PCT/US2003/024400. The application claimed a priority date of 05 August 2002, and it designated the United States. On 12 February 2004, the International Bureau (IB) communicated a copy of the international application to the United States Patent And Trademark Office (USPTO). The deadline for submission of the basic national fee was thirty months from the priority date, i.e., 07 February 2005 (05 February 2005 was a Saturday).

On 07 February 2005, applicant filed a Transmittal Letter for entry into the national stage in the United States accompanied by, among other materials, an authorization to charge Deposit Account No. 50-1604 for the required basic national fee. One of the documents filed by applicant referred to U.S. application 10/634,732, a related U.S. application. Apparently as a result thereof, the national stage materials filed 07 February 2005 were placed in U.S. application file 10/634,732, and were not processed further.

On 02 February 2007, applicant filed the present "Status Letter," treated herein as a petition under 37 CFR 1.181. The submission requests that the papers filed 07 February 2005 be removed from U.S. application file 10/634,732 and processed as a separate national stage application.

DISCUSSION

A review of the present submission and the materials filed by applicant on 07 February 2005, including the "Transmittal Letter To The United States Designated/Elected Office (DO/EO/US) Concerning A Submission Under 35 U.S.C. 371" (Form PTO-1390), confirms that applicant's 07 February 2005 filing was properly identified as a U.S. national stage filing under 35 U.S.C. 371 of international application PCT/US2003/024400. Accordingly, applicant's request that these materials be processed as a U.S. national stage application is appropriately granted.

CONCLUSION

The petition under 37 CFR 1.181 is **GRANTED**.

The national stage materials filed 07 February 2005 have been removed from U.S. application file 10/634,732 and placed in the present application file, U.S. application number 10/536,106, which has been established as the U.S. national stage under 35 U.S.C. 371 of PCT/US2003/024400.

Deposit Account No. 50-1604 will be charged for required fees.

This application is being referred to the National Stage Processing Branch of the PCT Operations Division for further processing in accordance with this decision, including the mailing of a Notification Of Missing Requirements (Form PCT/DO/EO/905) requiring submission of an oath or declaration in compliance with 37 CFR 1.497 and the surcharge for filing the oath or declaration later than thirty months after the priority date.

Richard M. Ross
Attorney Advisor
Office of PCT Legal Administration
Telephone: (571) 272-3296
Facsimile: (571) 273-0459

0 7 MAR 2007

#3

UNITED STATES PATENT AND TRADEMARK OFFICE

Commissioner for Patents
United States Patent and Trademark Office
P.O. Box 1450
Alexandria, VA 22313-1450
www.uspto.gov

William H. Hollimon
Pennington, Moore, Wilkinson, Bell & Dunbar, P.A.
215 S. Monroe Street, 2nd Floor
Tallahassee, FL 32301

In re Application of	:	
WELLS	:	
Application No.: 10/536,107	:	DECISION ON PETITION
PCT No.: PCT/US05/17917	:	
Int. Filing Date: 23 May 2005	:	UNDER 37 CFR 1.10(e)
Priority Date: 24 May 2004	:	
Atty. Docket No.: 23-479-01	:	
For: CRASH APPROPRIATE VEHICLE PARTITION	:	

This is a decision on applicant's "PETITION UNDER 37 CFR § 1.10(e)" filed 05 February 2007 in the United States Patent and Trademark Office (USPTO). In response to applicant's petition, serial number 10/536,107 has been established as the U.S. National stage serial number for international application PCT/US05/17917.

BACKGROUND

On 23 May 2005, applicant filed international application PCT/US05/17917 which claimed priority to an earlier U.S. application filed 24 May 2004. Pursuant to 37 CFR 1.495, the thirty-month period for paying the basic national fee in the United States expired at midnight on 24 November 2006.

On 05 February 2007, applicant filed the present petition under 37 CFR 1.10 (e) indicating that a U.S. National stage filing under 35 U.S.C. 371 was filed on 17 November 2006.

DISCUSSION

Applicant is advised that the petition under 37 CFR 1.10(e) is not appropriate for the present situation. As applicant notes in the present petition, some of the papers for the U.S. National stage filing of international application PCT/US05/17917 were received by the USPTO. While these papers (the executed declaration and the power of attorney and correspondence address indication form for 371 filing of PCT/US05/17917) were inadvertently filed in application 11/596,966, the U.S. National stage application of international application PCT/US05/19193, they were in fact filed with the Office on 17 November 2006. The Manual of Patent Examining Procedure (MPEP) section 513 explains that petitions under 37 CFR 1.10(e) only apply in cases where none of the filed papers in question were received by the Office:

37 CFR 1.10(e) applies only in those situations in which the correspondence at issue was lost *in toto* (i.e., the entire

correspondence was not delivered to the Office). Where there is a dispute as to the contents of correspondence submitted to the Office (e.g., an applicant asserts that three sheets of drawings were submitted under 37 CFR 1.10 with an application, but the Office records indicate receipt of only two sheets of drawings with the application), an applicant may not rely upon the provisions of 37 CFR 1.10(e) to establish what document(s) and/or fee(s) were filed in the Office with such correspondence. Rather, where the records of the Office (e.g., the file of the application) contain any document(s) or fee(s) corresponding to the contents of the correspondence at issue, the Office will rely upon its official record of the contents of such correspondence in absence of convincing evidence (e.g., a postcard receipt under MPEP § 503 containing specific itemization of the document(s) or fee(s) purported to have been filed with the correspondence at issue) that the Office received and misplaced any document(s) or fee(s) that is not among the official records of the Office.

In the present case two of the three documents purported to have been mailed were in fact received. Specifically, the declaration and power of attorney documents located in application 11/596,966. As such, 37 CFR 1.10(e) does not apply.

Regarding the present National stage application, a review of application 11/596,966 does not show a form PTO-1390 for PCT/US05/17917 contained therein. Therefore the only papers associated with application 10/536,107 are the declaration and power of attorney documents. These papers will be placed in the present application.

Lastly, since applicant has not provided any proof that such a transmittal letter was filed prior to the expiration of thirty months from the priority date, such as a stamped return receipt postcard, the application is abandoned as to the U.S. National stage for failure to provide payment of the full U.S. Basic National fee prior to the expiration of thirty months from the priority date.

RECOMMENDATION

Applicant may wish to consider filing a petition to the Commissioner under 37 CFR 1.137(a) or (b) requesting that the application be revived. Any petition filed under 37 CFR 1.137(a) and/or a petition under 37 CFR 1.137(b) requesting that the application be revived must meet the criteria indicated in the recent revision of 37 CFR 1.137. See 62 Fed. Reg. 53131 (October 10, 1997); 1203 Off. Gaz. Pat. Office 63 (October 21, 1997) (Effective Date: 01 December 1997).

This recommendation to file a petition under 37 CFR 1.137(a) or (b) should not be construed as an indication as to whether or not any such petition(s) will be favorably considered.

CONCLUSION

For the reasons stated above, applicant's petition under 37 CFR 1.10(e) is **DISMISSED**.

This application is being forwarded to the United States Designated/Elected Office (DO/EO/US) for mailing of a "Notification of Abandonment" (Form PCT/DO/EO/909).

Any further correspondence with respect to this matter should be directed to Mail Stop PCT, Commissioner for Patents, Office of PCT Legal Administration, P.O. Box 1450, Alexandria, Virginia 22313-1450, with the contents of the letter marked to the attention of the Office of PCT Legal Administration.

Derek A. Putonen
Attorney Advisor
Office of PCT Legal Administration
Tel: (571) 272-3294
Fax: (571) 273-0459

1 0 APR 2007

UNITED STATES PATENT AND TRADEMARK OFFICE

Commissioner for Patents
United States Patent and Trademark Office
Washington, D.C. 20231
www.uspto.gov

William H. Hollimon
Pennington, Moore, Wilkinson, Bell & Dunbar, P.A.
215 S. Monroe Street, 2nd Floor
Tallahassee, FL 32301

In re Application of	:	
WELLS	:	DECISION ON PETITIONS ON
Application No.: 10/536,107	:	
PCT No.: PCT/US05/17917	:	37 CFR 1.8(b), 37 CFR 1.137(a)
Int. Filing Date: 23 May 2005	:	
Priority Date: 24 May 2004	:	AND 37 CFR 1.137(b)
Atty Docket No.: 23-479-01	:	
For: CRASH APPROPRIATE VEHICLE	:	
PARTITION	:	

This decision is in response to applicant's "Petition Under 37 CFR §§ 1.8 and/or 1.137" filed 19 March 2007 in the United States Patent and Trademark Office (USPTO). All appropriate petition fees will be charged to deposit account 50-2979 as authorized.

BACKGROUND

On 07 March 2007, applicant was mailed a decision dismissing applicant's petition under 37 CFR 1.10(e). Applicant was afforded two months to file any request for reconsideration.

On 14 March 2007, applicant was mailed a "Notification of Abandonment" (Form PCT/DO/EO/09) indicating that the present application was abandoned as to the United States of America for failure to provide payment of the U.S. Basic National Fee prior to the expiration of thirty months from the priority date.

On 19 March 2007, applicant filed the present petitions.

DISCUSSION

I. Petition to Withdraw Holding of Abandonment Under 37 CFR 1.8(b)

Applicant is advised that 37 CFR 1.8 does not apply to the facts at hand. Specifically, 37 CFR 1.8 certification is reserved for U.S. Postal Service first class mailings, facsimile transmissions and use of the USPTO electronic filing system (See 37 CFR 1.8(a)(1)(i)(A)-(C)). The mailing at issue was filed with the USPTO as an Express Mail mailing. In addition, even if the filing had been made using one of the three options above, 37 CFR 1.8(a)(2)(F) states that the procedure described in paragraph (a)(1) does not apply to, "The filing of a copy of the international application and the basic national fee necessary to enter the national stage, as

specified in § 1.495(b)." The paper in question is the Form PTO-1390 which contained authorization for payment of the U.S. basic national fee. As such, it is not possible to grant applicant's petition to withdraw the holding of abandonment pursuant to 37 CFR 1.8(b).

II. Petition to Revive Pursuant to 37 CFR 1.137(a)

A petition to revive an application must contain: 1) the petition fee; 2) the proper reply; 3) a statement of unavoidable delay and 4) a terminal disclaimer if required. Applicant has satisfied items 1 and 2. Item 4 does not apply.

Regarding item 3, the circumstances identified by applicant do not satisfy the exacting standard applied when determining whether the cause of abandonment was unavoidable. MPEP section 711.03(c) states that "'unavoidable' delay is the epitome of 'unintentional' delay. Thus, an unintentional delay precludes revival under 37 CFR1.137(a).

In addition, section 711.03(c) states:

Decisions on reviving abandoned applications on the basis of "unavoidable" delay have adopted the reasonably prudent person standard in determining if the delay was unavoidable:

The word 'unavoidable' . . . is applicable to ordinary human affairs, and requires no more or greater care or diligence than is generally used and observed by prudent and careful men in relation to their most important business. It permits them in the exercise of this care to rely upon the ordinary and trustworthy agencies of mail and telegraph, worthy and reliable employees, and such other means and instrumentalities as are usually employed in such important business. If unexpectedly, or through the unforeseen fault or imperfection of these agencies and instrumentalities, there occurs a failure, it may properly be said to be unavoidable, all other conditions of promptness in its rectification being present.

Likewise, as a "reasonably prudent person" would file papers or fees in compliance with 37 CFR 1.8 or 1.10 to ensure their timely filing in the USPTO, as well as preserve adequate evidence of such filing, a delay caused by an applicant's failure to file papers or fees in compliance with 37 CFR 1.8 and 1.10 does not constitute "unavoidable" delay. See *Krahn*, 15 USPQ2d at 1825.

Thus, many petitions originally filed under 37 CFR 1.137(a) end up being granted under 37 CFR 1.137(b) when the applicant realizes that sufficient evidence concerning the delay is too difficult to obtain or the cause of the delay simply does not amount to "unavoidable delay" within the meaning of 37 CFR 1.137(a).

In the present case, counsel attests that he placed a copy of the relevant form PTO-1390 in the Express Mail mailing envelope and that the paper was "mishandled/misplaced by the Patent Office." Applicant states that the evidence for the alleged mishandling is that all of the other papers filed in the Express Mail mailing were placed in the National stage filing for PCT/US05/19193. This statement does rise to the level of unavoidable delay. While counsel has provided a statement that he believes he filed the form PTO-1390 with the other papers, applicant has not included any impartial evidence such as a return receipt postcard (which could have been submitted in order to file a petition to withdraw the holding of abandonment under 37 CFR 1.181) to support this claim. In addition, the fact that all of the other papers in question were received seems to indicate that the particular form PTO-1390 was not included; the result of

multiple applications being placed in one Express Mail mailing. As shown above, a delay caused by the failure to file in compliance with 37 CFR 1.10 does not constitute unavoidable delay.

III. Petition to Revive Pursuant to 37 CFR 1.137(b)

The petition to revive under 37 CFR 1.137(b) is hereby **DISMISSED** as follows:

A review of USPTO records for deposit account number 50-2979 reveals that the deposit account does not contain sufficient funds to charge the petition fee nor the required reply of the small entity U.S. basic national fee.

CONCLUSION

For the reasons above, applicant's petition under 37 CFR 1.8(b) is **DISMISSED**.

For the reasons above, applicant's petition under 37 CFR 1.137(a) is **DISMISSED**.

For the reasons above, applicant's petition under 37 CFR 1.137(b) is **DISMISSED**.

Any reconsideration on the merits of this petition must be filed within **TWO (2) MONTHS** from the mail date of this decision. Any reconsideration request should include a cover letter entitled "Renewed Petition Under 37 CFR 1.137(b)." Extensions of time may be obtained under 37 CFR 1.136(a).

Any further correspondence with respect to this matter should be directed to Mail Stop PCT, Commissioner for Patents, Office of PCT Legal Administration, P.O. Box 1450, Alexandria, Virginia 22313-1450, with the contents of the letter marked to the attention of the Office of PCT Legal Administration.

Derek A. Putonen
Attorney Advisor
Office of PCT Legal Administration
Tel: 571-272-3294
Fax: 571-273-0459

04/10/2007 SBASHEIR 00000002 502979 10536107
Sale Ref: 00000002 DA#: 502979 10536107
01 FC:2452 250.00 DA

UNITED STATES PATENT AND TRADEMARK OFFICE

Commissioner for Patents
United States Patent and Trademark Office
Washington, D.C. 20231
www.uspto.gov

16 MAY 2007

William H. Hollimon
Pennington, Moore, Wilkinson, Bell & Dunbar, P.A.
215 S. Monroe Street, 2nd Floor
Tallahassee, FL 32301

In re Application of	:	
WELLS	:	
Application No.: 10/536,107	:	
PCT No.: PCT/US05/17917	:	DECISION ON PETITION
Int. Filing Date: 23 May 2005	:	
Priority Date: 24 May 2004	:	UNDER 37 CFR 1.137(b)
Atty Docket No.: 23-479-01	:	
For: CRASH APPROPRIATE VEHICLE	:	
PARTITION	:	

This decision is in response to applicant's "Reconsideration of Petition Under 37 CFR §§ 1.8 and/or 1.137" filed 30 April 2007 in the United States Patent and Trademark Office (USPTO). The petition is **GRANTED**.

Applicant previously provided a statement that "the entire delay in filing the above-identified U.S. national stage application from the 30 months deadline until the filing of a grantable petition under 37 C.F.R. § 1.137(b) was unintentional." Applicant has responded promptly to the decision of 10 April 2007. The prior statement and prompt filing of the present renewed petition satisfies the requirement of 37 CFR 1.137(b)(3).

A review of the application file reveals that applicant has now provided payment of the full, U.S. Basic National Fee. Therefore, the request to revive the application abandoned under 35 U.S.C. 371(d) is granted as to the National stage in the United States of America.

The application has an international filing date of 23 May 2005 under 35 U.S.C. 363 and will be given a date of **30 April 2007** under 35 U.S.C. 371(c)(1), (c)(2) and (c)(4).

This application is being returned to the United States Designated/Elected Office (DO/EO/US) for treatment in accordance with this decision; including the charging of any additional necessary fees to deposit account number 50-2979.

Derek A. Putonen
Attorney Advisor
Office of PCT Legal Administration
Tel: 571-272-3294
Fax: 571-273-0459

UNITED STATES PATENT AND TRADEMARK OFFICE

Commissioner for Patents
United States Patent and Trademark Office
P.O. Box 1450
Alexandria, VA 22313-1450
www.uspto.gov

Paper No. 3

BLACK LOWE & GRAHAM, PLLC
701 FIFTH AVENUE
SUITE 4800
SEATTLE WA 98104

COPY MAILED
AUG 03 2007
OFFICE OF PETITIONS

In re Application of :
EDWARD BALASSANIAN : ON PETITION
Application No. 10/536,108 :
Filed: July 13, 2006 :
Attorney Docket No. IMPL-1-1016 :

This is a decision on the "PETITION TO ACCORD FILING DATE," filed February 12, 2007, requesting that an application, entitled "DIRECT MANIPULATION OF DISPLAYED CONTENT," be assigned an application number and accorded a filing date of July 13, 2006.

The petition is **GRANTED**.

Applicant submitted a copy of an Electronic Patent Application Fee Transmittal, which indicated that on July 13, 2006, applicant filed a Continued Prosecution Application (43 pages) and Drawings (18 pages), and paid a $510.00 fee for an extension of time for response within the third month.

Applicant promptly filed this petition, stating that applicant intended to file a continuation application under 37 CFR 1.53(b), but mistakenly chose the "Continued Prosecution Application - Continuation (ACPA)" drop down menu on the EFS-Web system.

It is clear, based on the transmittal, specification, claims, and drawings filed, that applicant intended to file a continuation application under 37 CFR 1.53(b), but inadvertently submitted an electronic filing of this application as a Continued Prosecution Application ("CPA").

Accordingly, on petition, the application papers will be reprocessed as a continuation application under 37 CFR 1.53(b) filed on July 13,

2006, and assigned application No. 10/536,108. All further correspondence concerning this continuation application should be directed to application No. 10/536,108.

The Office finance records will be corrected to show that the filing fees, surcharge, and petition fee were paid in application No. 10/536,108. The $400.00 petition fee will not be refunded because applicant erroneously selected the option of filing a CPA electronically, causing the application papers to be processed in 10/300,244. Thus, the filing of the present petition was not necessitated by any error on the part of the USPTO.

Application No. 10/536,108 will be forwarded to the Office of Initial Patent Examination for further processing as a continuation application of prior filed application No. 10/300,244, **with a filing date of July 13, 2006**, using the application papers filed on that date.

Telephone inquiries should be directed to the undersigned at (571) 272-3211.

Christina Tartera Donnell

Christina Tartera Donnell
Senior Petitions Attorney
Office of Petitions

1 9 JAN 2007

UNITED STATES PATENT AND TRADEMARK OFFICE

Commissioner for Patents
United States Patent and Trademark Office
P.O. Box 1450
Alexandria, VA 22313-1450
www.uspto.gov

Wolf, Greenfield & Sacks, P.C.
600 Atlantic Avenue
Boston, Massachusetts 02210-2206

In re Application of	:	
GIBSON et al.	:	
U.S. Application No. 11/596,722	:	
PCT No.: PCT/US05/17581	:	
Int. Filing Date: 17 May 2005	:	COMMUNICATION
Priority Date: 17 May 2004	:	
Attorney Docket No.: B1075.71025US01	:	
For: IRRIGATED CATHETER	:	

The above-identified application is before the Office of PCT Legal Administration for consideration of matters under 35 U.S.C. 371.

BACKGROUND

On 17 May 2005, applicant filed international application No. PCT/US05/17581, which claimed a priority date of 17 May 2004. Pursuant to 37 CFR 1.495, the deadline for payment of the basic national fee in the United States was to expire 30 months from the priority date, 17 November 2006.

On 17 November 2006, applicant filed, through Eric L. Amundsen of the law firm of Wolf, Greenfield & Sacks, P.C., a transmittal letter for entry into the national stage in the United States (Form PTO-1390) which was accompanied by, *inter alia*, the requisite basic national fee as required by 35 U.S.C. 371(c)(1); a copy of the international application; an information disclosure statement; and an application data sheet. The submission, identifying international application no. PCT/US05/17581, was assigned U.S. application number 11/596,722.

On 17 November 2006, applicant filed, through Melissa Beede of the law firm of Wolf, Greenfield & Sacks, P.C., a second transmittal letter for entry into the national stage in the United States referencing the international application PCT/US05/17581, which was accompanied by, *inter alia*, a second basic national fee; a copy of the international application; an information disclosure statement; and an application data sheet. These papers were assigned U.S. application number 11/597,015.

DISCUSSION

As is evident from the above recited facts, two sets of papers to enter the national stage have been submitted for international application number PCT/US05/17581 (United States application numbers 11/596,722 and 11/597,015). The end result for an international application designating the United States of America is a single U.S. national stage application. Therefore, the submission of two sets of national stage papers to enter the United States was improper.

Applicants should use application number 11/596,722 in all future communications with the United States Patent and Trademark Office (PTO). Application number 11/597,015 will be discontinued.

CONCLUSION

Application no. 11/596,722 is being forwarded to the National Stage Processing Branch of the Office of PCT Operations for further processing to: (1) merge the papers filed in U.S. Application no. 11/597,015 into U.S. Application no. 11/596,722 and (2) refund the filing fees of $900 paid in connection with the 11/597,015 application to deposit account no. 23-2825.

Applicants should use application number 11/596,722 in all future communications with the United States Patent and Trademark Office (PTO).

Anthony Smith
Attorney-Advisor
Office of PCT Legal Administration
Tel.: 571-272-3298
Facsimile: 571-273-0459

#3

UNITED STATES PATENT AND TRADEMARK OFFICE

Commissioner for Patents
United States Patent and Trademark Office
P.O. Box 1450
Alexandria, VA 22313-1450
www.uspto.gov

13 APR 2007

Wolf, Greenfield & Sacks, P.C.
600 Atlantic Avenue
Boston, Massachusetts 02210-2206

In re Application of	:	
GIBSON et al.	:	
U.S. Application No. 10/536,109	:	
PCT No.: PCT/US05/17338	:	
Int. Filing Date: 17 May 2005	:	
Priority Date: 17 May 2004	:	DECISION ON PETITION
Attorney Docket No.: B1075.71024US01	:	(37 CFR 1.182)
For: IRRIGATED CATHETER	:	

This decision is issued in response to applicants' "Petition Under 37 CFR 1.182" filed 28 February 2007, which seeks to correct the international application number on the national stage application papers filed 17 November 2006 so as to allow such materials to be treated as the U.S. national stage of PCT/US05/17338.[1] Deposit Account No. 23-2825 will be charged the required $400 petition fee.

BACKGROUND

On 17 May 2005, applicants filed international application No. PCT/US05/17338, which claimed a priority date of 17 May 2004. Pursuant to 37 CFR 1.495, the deadline for payment of the basic national fee in the United States was to expire 30 months from the priority date, 17 November 2006.

On 17 November 2006, applicants filed a Transmittal Letter for entry into the national stage in the United States accompanied by, among other materials, payment of the basic national fee, a copy of the international application, an information disclosure statement, an application data sheet (ADS), and an executed declaration in compliance with 37 CFR 1.497. The first page of the Transmittal Letter identified the application as a national stage of PCT/US05/17581.

---

[1]It is noted that U.S. application 10/536,109 will be considered the U.S. National stage of PCT/US05/17338.

Based on the international application number listed on the first page of the Transmittal Letter, the present application was placed in U.S. application no. 11/596,722, the national stage of PCT/US05/17581.[2]

On 28 February 2007, applicants filed the "Petition Under 37 CFR 1.182" considered herein, with accompanying materials, to correct the contradiction in the 17 November 2006 submission.

DISCUSSION

As noted above, the first page of the Transmittal Letter filed 17 November 2006 incorrectly identified the international application to which the submission was directed. Correction of this error is required before the materials filed 17 November 2006 can be treated as having been directed to international application PCT/US05/17338, as necessary to avoid abandonment of the international application with respect to the United States.

In the present petition, applicants confirm that the listing of international application PCT/US05/17581 on the first sheet of the Transmittal Letter filed 17 November 2006 was the result of a typographical error, and that the correct international application is PCT/US05/17338. The petition also notes that the correct international application number was listed on the second page of the Transmittal Letter filed 17 November 2006, and it is accompanied by payment of the required petition fee that properly identifies the application as the national stage of PCT/US05/17338. These materials satisfy the requirements for a grantable petition to correct the typographical errors in the application materials filed 17 November 2006 and to permit such materials to be treated as having been directed to international application PCT/US05/17338.

The following documents, filed 17 November 2006, have been transferred to the above-identified application: the application data sheet; the published PCT application of PCT/US05/17338; Form PCT/IB/301; PCT/IB/304; the International Search Report and Written Opinion for PCT/US05/17338; the Information Disclosure Statement submitted 17 November 2006; and the Information Disclosure Statement submitted 12 January 2007.

CONCLUSION

Applicants' petition under 37 CFR 1.182 is **GRANTED**.

Deposit Account No. 23-2825 will be charged the required $400 petition fee, $300 basic national fee, $200 examination fee, and $400 search fee.

---

[2]On 19 January 2007, the Office of PCT Legal Administration mailed "Communication" indicating that two sets of papers to enter the national stage had been submitted for international application number PCT/US05/17581. A copy of this communication will be placed in the above-identified application.

The materials filed 17 November 2006 have been assigned U.S. application number 10/536,109, and will be treated as the national stage of PCT/US05/17338.

The application is being referred to the National Stage Processing Branch of the Office of PCT Operations for further processing in accordance with this decision.

Anthony Smith
Attorney-Advisor
Office of PCT Legal Administration
Tel.: 571-272-3298
Facsimile: 571-273-0459

UNITED STATES PATENT AND TRADEMARK OFFICE

Commissioner for Patents
United States Patent and Trademark Office
P.O. Box 1450
Alexandria, VA 22313-1450
www.uspto.gov

Paper No. 5

PROTEOTECH, INC.
12040 115th AVE. N E
KIRKLAND WA 98034

COPY MAILED

APR 06 2007

OFFICE OF PETITIONS

In re Application of
Alan D. Snow
Application No. 08/723,661
Filed: October 3, 1996
Attorney Docket No. PROTEO.P00D1

DECISION ON PETITION

In re Application of
Alan D. Snow
Application No. 10/536,111
Filed: March 30, 1999
For: ANIMAL MODELS OF HUMAN AMYLOIDOSES

This is a decision on renewed petition filed March 1, 2007,[1] requesting that an improper Continued Prosecution Application (CPA) under 37 CFR 1.53(d) be treated as an application under 37 CFR 1.53(b) and be accorded a filing date of March 30, 1999.

On October 30, 1998, the Office mailed a final Office action in application No. 08/723,661. In response, on March 30, 1999, applicant submitted a petition for a two (2) month extension of time to respond, a preliminary amendment, a continuation CPA request, and a divisional CPA request, both based on prior application No. 08/723,661. The Office processed the continuation CPA request. However, the divisional CPA request was improper and was not processed by the Office.

[1] Applicant submitted a copy of applicant's date-stamped postcard receipt acknowledging receipt of a petition (and $130.00 fee), an executed power of attorney, a complete copy of the nonprovisional application papers, a copy of the preliminary amendment, and a copy of the CPA request in the USPTO on June 6, 2005. Accordingly, the present renewed petition is timely.

Copied from 08723661 on 01/25/2008

Applicants states that the divisional CPA request was misfiled in application No. 08/723,661, and asks that the Office convert it to a continuation application under 37 CFR 1.53(b) with a filing date of March 30, 1999.

Accordingly, the petition is **granted**.

The continuation application under 37 CFR 1.53(b) filed on March 30, 1999, has been assigned application No. 10/536,111. The CPA request and the application papers have been removed from the file of application No. 08/723,661, and have been placed in application No. 10/536,111. Copies of the CPA request and the present petition will be retained in application No. 08/723,661 to complete the record therein. All further correspondence concerning the continuation application under 37 CFR 1.53(b) should be directed to application No. 10/536,111, not application No. 08/723,661.

The Office finance records will be corrected to show that the $380.00 filing fee, $54.00 claims fee, and $130.00 petition fee paid on March 30, 1999, and August 23, 2004, respectively, were paid in application No. 10/536,111. Furthermore, the Office finance records indicate that applicant submitted a duplicate $130.00 petition fee on June 6, 2005. As this additional fee is unnecessary, the Office will issue applicant a refund of $130.00 by treasury check in due course.

Application No. 10/536,111will be forwarded to the Office of Initial Patent Examination for further processing as an application filed under 37 CFR 1.53(b), not under 37 CFR 1.53(d), with the filing date of March 30, 1999.

Application No. 08/723,661 will be forwarded to Files Repository.

Applicant is advised that 37 CFR 1.78 requires that any nonprovisional application claiming benefit of one or more prior-filed copending nonprovisional applications contain, or be amended to contain, a reference to each such prior-filed application, identifying it by application number and indicating the relationship of the applications (i.e., continuation, divisional, or continuation-in-part). This reference must be included in an application data sheet (37 CFR 1.76) or the specification must contain, or be amended to contain, such reference in the first sentence following the title. See 37 CFR 1.78(a)(2). Accordingly, a preliminary amendment to the specification to add the required reference, in compliance with 37 CFR 1.121, or an application data sheet including the required reference should be promptly filed.

Any inquiries concerning this decision should be directed to the undersigned at (571) 272-3211.

Christina Tartera Donnell

Christina Tartera Donnell
Senior Petitions Attorney
Office of Petitions

Copied from 08723661 on 01/25/2008

#3

UNITED STATES PATENT AND TRADEMARK OFFICE

Commissioner for Patents
United States Patent and Trademark Office
P.O. Box 1450
Alexandria, VA 22313-1450
www.uspto.gov

20 JUN 2007

Thomas E. Sisson
JACKSON WALKER LLP
112 E. Pecan Street, Suite 2100
San Antonio, TX 78205

In re Application of	:	
McDONALD, John Terrance	:	
U.S. Application No.: 10/536,112	:	**DECISION**
PCT No.: PCT/US2003/025032	:	**UNDER**
Int. Filing Date: 08 August 2003	:	**37 CFR 1.10(e)**
Priority Date: 08 August 2002	:	
Attorney Docket No.: P-4046.03(PCT)(US)	:	
For: LIQUID POURER ASSEMBLY	:	

This decision is in response to the papers filed 08 June 2007 which are treated as a petition under 37 CFR 1.10(e). No petition fee is required.

BACKGROUND

On 08 February 2005, applicants purportedly filed a national stage application of PCT/US2003/025032 pursuant to 35 U.S.C. 371 using Express Mail. However, the papers were not processed as a national stage application and could not be located.

Three status inquiries were filed on 25 April 2005, 11 July 2005 and 13 February 2006. No response was sent by the USPTO.

On 08 June 2007, applicants filed the instant petition which was accompanied by, *inter alia*, a copy of the papers purportedly filed 08 February 2005, a copy of the three status inquiries mailed, a "Statement of Laura Pope, and a copy of the Customer Copy of Express Mail No. EV426588465US.

DISCUSSION

The national stage papers filed 08 February 2005 including an executed declaration have been located in the underlying international application. As such, the petition under 37 CFR 1.10(e) is no longer required.

The $500.00 in fees paid have been transferred to the above-captioned national stage application.

CONCLUSION

Applicants' petition under 37 CFR 1.10(e) is **DISMISSED** as **MOOT**.

10/536,112

This application is being forwarded to the National Stage Processing Division of the Office of PCT Operations for continued processing.

James Thomson

James Thomson
Attorney Advisor
Office of PCT Legal Administration

Tel.: (571) 272-3302

UNITED STATES PATENT AND TRADEMARK OFFICE

Commissioner for Patents
United States Patent and Trademark Office
P.O. Box 1450
Alexandria, VA 22313-1450
www.uspto.gov

JACKSON WALKER, L.L.P.
112 E. PECAN, SUITE 2400
SAN ANTONIO, TX 78205

COPY MAILED
APR 13 2009
OFFICE OF PETITIONS

In re Application of :
John T. MCDONALD :
Application No. 10/536,112 :
Filed: February 8, 2005 :
Attorney Docket No. **P-4046.03(PCT)(US)** :

DECISION ON PETITION TO WITHDRAW FROM RECORD

This is a decision on the Request to Withdraw as attorney or agent of record under 37 C.F.R. § 1.36(b), filed January 15, 2009.

The request is **APPROVED**.

A grantable request to withdraw as attorney/agent of record must be signed by every attorney/agent seeking to withdraw or contain a clear indication that one attorney is signing on behalf of another/others.

The request was signed by Thomas E. Sisson on behalf of all attorneys of record. All attorneys/agents associated have been withdrawn. Applicant is reminded that there is no attorney of record at this time.

All future communications from the Office will be directed to the sole named signing inventor at the address below until otherwise properly notified by the applicant.

There is an outstanding final Office action mailed November 10, 2008 that requires a reply from the applicant.

Telephone inquiries concerning this decision should be directed to the undersigned at 571-272-7253.

/Monica A. Graves/
Petitions Examiner, Office of Petitions

cc: **JOHN TERRANCE MCDONALD**
P.O. BOX 5966
SAN ANTONIO, TX 78201

17 JUL 2007

UNITED STATES PATENT AND TRADEMARK OFFICE

COMMISSIONER FOR PATENTS
UNITED STATES PATENT AND TRADEMARK OFFICE
P.O. BOX 1450
ALEXANDRIA, VA 22313-1450
www.uspto.gov

CALFEE HALTER & GRISWOLD, LLP
800 SUPERIOR AVENUE
SUITE 1400
CLEVELAND, OH 44114

In re Application of LIU et al	:	
U.S. Application No.: 10/536,113	:	
PCT Application No.: PCT/US2005/031898	:	
Int. Filing Date: 07 September 2005	:	DECISION
Priority Date Claimed: 08 September 2004	:	
Attorney Docket No.: 22727/04343	:	
For: HUMAN MONOCLONAL ANTI-CTLA4	:	
ANTIBODIES IN CANCER TREATMENT	:	

This is in response to applicant's "Petition for Revival of an International Application for Patent Designating the U.S. Abandoned Unintentionally Under 37 CFR 1.137(b)" filed 13 June 2007.

BACKGROUND

On 07 September 2005, applicant filed international application PCT/US2005/031898, which claimed priority of an earlier United States application filed 08 September 2004. The thirty-month period for paying the basic national fee in the United States expired on 08 March 2007.

International application PCT/US2005/031898 became abandoned as to the United States for failure to timely pay the basic national fee.

On 13 June 2007, applicant filed the present petition under 37 CFR 1.137(b).

DISCUSSION

Under 37 CFR 1.137(b), a petition requesting that an application be revived on the grounds of unintentional abandonment must be accompanied by: (1) the required reply unless previously filed, (2) the petition fee as set forth in 37 CFR 1.17(m), (3) a statement that the entire delay in filing the required reply from the due date for the reply until the filing of a grantable petition was unintentional, and (4) a terminal disclaimer if the application was filed before 08 June 1995.

With regard to item (1), applicant has provided the required reply under 35 U.S.C. 371.

With regard to item (2), applicant has provided the required petition fee.

With regard to item (3), applicant has provided the required statement.

With regard to item (4), because the international application was filed after 08 June 1995, no terminal disclaimer is required.

CONCLUSION

For the reasons above, the petition under 37 CFR 1.137(b) is GRANTED.

This application is being forwarded to the United States Designated/Elected Office (DO/EO/US) for further processing in accordance with this decision, including preparation and mailing of a Notification of Missing Requirements under 35 U.S.C. 371 (Form PCT/DO/EO/905) indicating that a properly executed oath or declaration in compliance with 37 CFR 1.497 must be filed.

Bryan Lin

Bryan Lin
PCT Legal Examiner
PCT Legal Office

Telephone: 571-272-3303
Facsimile: 571-273-0459

0 9 JUL 2007

UNITED STATES PATENT AND TRADEMARK OFFICE

Commissioner for Patents
United States Patent and Trademark Office
P.O. Box 1450
Alexandria, VA 22313-1450
www.uspto.gov

LERNER, DAVID, LITTENBERG,
KRUMHOLZ & MENTLIK
600 SOUTH AVENUE WEST
WESTFIELD NJ 07090

In re Application of OGINO et al. Application No.: 10/506,259 PCT No.: PCT/JP2003/016454 Int. Filing Date: 22 December 2003 Priority Date: 06 January 2003 Attorney's Docket No.: None For: AUTHENTICATION SYSTEM, AUTHENTICATION SERVER, AUTHENTICATING METHOD, AUTHENTICATING . . .	DECISION

This is a decision in response to applicants' submission filed in the United States Patent and Trademark Office (USPTO) on 16 February 2007, which has properly been treated as a petition under 37 CFR 1.181.

BACKGROUND

On 22 December 2003, applicant filed international application PCT/JP2003/016454, which claimed a priority date of 06 January 2003. A copy of the international application was communicated to the USPTO from the International Bureau on 22 July 2004. The thirty-month period for paying the basic national fee in the United States expired at midnight on 06 July 2005.

On 31 August 2004, applicant filed a transmittal letter for entry into the national stage in the United States, which was accompanied by, *inter alia*, the Basic National Fee.

On 11 April 2005, the United States Designated/Elected Office (DO/EO/US) mailed a NOTIFICATION OF MISSING REQUIREMENTS UNDER 35 U.S.C. 371 (Form PCT/DO/EO/905) indicating, *inter alia*, that a declaration of inventors in compliance with 37 CFR 1.497(a)-(b) was required.

On 07 November 2005, applicants submitted a petition/fee for a five month extension of time as well as a "REQUEST FOR CONTINUATION APPLICATION UNDER 37 CFR 1.53(b) IN RESPONSE TO A NOTIFICATION OF MISSING REQUIREMENTS", which was accompanied by, *inter alia*, a copy of the prior application as originally filed and a preliminary amendment.

On 20 March 2006, applicants filed an Information Disclosure Statement (IDS).

On 14 April 2006, applicants filed a second preliminary amendment.

On 16 February 2007, applicants filed a submission which has properly been treated as a petition under 37 CFR 1.181. The submission was accompanied by a declaration of inventors.

On 25 June 2007, the DO/EO/US mailed a NOTICE OF ACCEPTANCE OF APPLICATION UNDER 35 U.S.C. 371 (Form PCT/DO/EO/903) and FILING RECEIPT indicating a 35 U.S.C. 371 date of 16 February 2007.

DISCUSSION

The petition requests that the application papers filed 07 November 2005 be assigned an application number and filing date of 07 November 2005.

The application papers filed 07 November 2005 were placed in the file for application number 10/506,259. However, these application papers should have been used to create a new application under 35 U.S.C. 111(a). Accordingly, a new application filed under 35 U.S.C. 111(a) has been created and assigned application number **10/536,114**. The application papers filed 07 November 2005 have been placed in application number **10/536,114**.

The IDS filed 20 March 2006, the preliminary amendment filed 14 April 2006, and the declaration filed 16 February 2007 were also placed in the file for application number 10/506,259. These papers have also been placed in application number **10/536,114**.

The NOTICE OF ACCEPTANCE and FILING RECEIPT mailed 25 June 2007 are hereby VACATED.

CONCLUSION

For the reasons set forth above, the petition under 37 CFR 1.181 is **GRANTED**.

For the reasons set forth above, the NOTICE OF ACCEPTANCE and FILING RECEIPT mailed 25 June 2007 are hereby VACATED.

For the reasons set forth above, the application papers filed 07 November 2005, the IDS filed 20 March 2006, the preliminary amendment filed 14 April 2006, and the declaration filed 16 February 2007 have been placed in the file of application number **10/536,114**.

Applicant should use application number **10/536,114** in all future communications with the Patent and Trademark Office in regards to the continuation of application number 10/506,259.

This application will be forwarded to the Office of Initial Patent Examining for processing as an application under 35 U.S.C. 111(a) having a filing date of **07 November 2005**.

Daniel Stemmer
Legal Examiner
PCT Legal Affairs
Office of Patent Cooperation Treaty
Legal Administration
Telephone: (571) 272-3301

UNITED STATES PATENT AND TRADEMARK OFFICE

Commissioner for Patents
United States Patent and Trademark Office
P.O. Box 1450
Alexandria, VA 22313-1450
www.uspto.gov

LERNER, DAVID, LITTENBERG,
KRUMHOLZ & MENTLIK
600 SOUTH AVENUE WEST
WESTFIELD NJ 07090

COPY MAILED

MAR 16 2009

OFFICE OF PETITIONS

In re Application of	:	
Ogino, et al.	:	DECISION GRANTING STATUS
Application No. 10/536,114	:	UNDER 37 CFR 1.47(a)
Filed: November 7, 2005	:	
Attorney Docket No. SONYJP 3.3-1047	:	
CONT		

This is in response to the petition under 37 CFR 1.47(a), filed February 24, 2009 (certificate of mailing date February 10, 2009).

The petition is **GRANTED.**

Petitioners have shown that the non-signing inventor, Hidekazu Kondo, has constructively refused to join in the filing of the above-identified application.

The application and papers have been reviewed and found in compliance with 37 CFR 1.47(a). This application is hereby accorded Rule 1.47(a) status.

As provided in 37 CFR 1.47(c), this Office will forward notice of this application's filing to the non-signing inventor at the address given in the petition. Notice of the filing of this application will also be published in the Official Gazette.

This application is being referred to the Office of Patent Application Processing for further pre-examination processing.

Telephone inquiries regarding this decision should be directed to the undersigned at (571) 272-3230.

Shirene Willis Brantley
Senior Petitions Attorney
Office of Petitions

UNITED STATES PATENT AND TRADEMARK OFFICE

Commissioner for Patents
United States Patent and Trademark Office
P.O. Box 1450
Alexandria, VA 22313-1450
www.uspto.gov

HIDEKAZU KONDO
7-7, MOTOASAKUSA 1-CHOME
TAITO-KU, TOKYO
111-0041 JAPAN

COPY MAILED
MAR 16 2009
OFFICE OF PETITIONS

In re Application of :
Ogino, et al. : LETTER
Application No. 10/536,114 :
Filed: November 7, 2005 :
Attorney Docket No. SONYJP 3.3-1047 CONT :

Dear Mr. Kondo:

You are named as a joint inventor in the above-identified United States patent application, filed under the provisions of 35 U.S.C. 116 (United States Code), and 37 CFR 1.47(a), Rules of Practice in Patent Cases. Should a patent be granted on the application you will be designated therein as a joint inventor.

As a named inventor you are entitled to inspect any paper in the file wrapper of the application, order copies of all or any part thereof (at a prepaid cost per 37 CFR 1.19) or make your position of record in the application. Alternatively, you may arrange to do any of the preceding through a registered patent attorney or agent presenting written authorization from you. If you care to join the application, counsel of record (see below) would presumably assist you. Joining the application would entail the filing of an appropriate oath or declaration by you pursuant to 37 CFR 1.63.

Telephone inquiries regarding this communication should be directed to the undersigned at (571) 272-3230. Requests for information regarding your application should be directed to the File Information Unit at (703) 308-2733. Information regarding how to pay for and order a copy of the application, or a specific paper in the application, should be directed to the Certification Division at (571) 272-3150 or 1 (800) 972-6382 (outside the Washington, DC area).

Shirene Willis Brantley
Shirene Willis Brantley
Senior Petitions Attorney
Office of Petitions

ATTORNEYS OF RECORD: LERNER, DAVID, LITTENBERG,
KRUMHOLZ & MENTLIK
600 SOUTH AVENUE WEST
WESTFIELD NJ 07090

UNITED STATES PATENT AND TRADEMARK OFFICE

Commissioner for Patents
United States Patent and Trademark Office
P.O. Box 1450
Alexandria, VA 22313-1450
www.uspto.gov

18 SEP 2007

CALFEE HALTER & GRISWOLD, LLP
800 SUPERIOR AVENUE
SUITE 1400
CLEVELAND, OH 44114

In re Application of	:	
LIU et al.	:	
Application No.: 10/536,115	:	DECISION ON
PCT No.: PCT/US2005/031899	:	
Int. Filing Date: 07 September 2005	:	PETITION UNDER
Priority Date: 08 September 2004	:	
Attorney Docket No.: 22727/04520	:	37 CFR 1.137(b)
For: COMBINATION THERAPY WITH	:	
ANTI-CTLA4 AND ANTI-4-1BB ANTIBODIES	:	

This decision is in response to applicants' petition under 37 CFR 1.137(b) filed 13 June 2007 in the United States Patent and Trademark Office (USPTO).

BACKGROUND

On 07 September 2005, applicant filed international application PCT/US2005/031899 which designated the U.S. and claimed a priority date of 08 September 2004. A copy of the international application was communicated to the USPTO from the International Bureau on 16 March 2006. The thirty-month period for paying the basic national fee in the United States expired at midnight on 08 March 2007.

On 13 June 2007, applicant filed a transmittal letter for entry into the national stage in the United States, which was accompanied by, *inter alia*, the basic national fee, an unexecuted declaration of inventors, and a petition under 37 CFR 1.137(b) to revive the application.

DISCUSSION

A petition to revive the present application under 37 CFR 1.137(b) must include:
(1) The required reply;
(2) The petition fee;
(3) A statement that the entire delay in filing the required reply from the due date for the reply until the filing of a grantable petition was unintentional.

As to item (1), applicant submitted the basic national fee on 13 June 2007.

As to item (2), applicant submitted the petition fee on 13 June 2007.

As to item (3), the required statement has been provided.

A review of the application file reveals that, with the filing of the present petition and accompanying papers, a proper response has been submitted and all of the requirements of 37 CFR 1.137(b) for revival have been satisfied and revival is therefore appropriate.

CONCLUSION

The petition under 37 CFR 1.137(b) is **GRANTED** for the reasons set forth above.

Please direct further correspondence with respect to this matter to Mail Stop PCT, Commissioner for Patents, Office of PCT Legal Administration, P.O. Box 1450, Alexandria, Virginia 22313-1450, with the contents of the letter marked to the attention of the Office of PCT Legal Administration.

This application is being forwarded to the National Stage Processing Branch of the Office of PCT Operations to continue national stage processing of the application including preparing and mailing a NOTIFICATION OF MISSING REQUIREMENTS (Form PCT/DO/EO/905) requiring an executed oath or declaration of the inventor in compliance with 37 CFR 1.497(a)-(b) and the surcharge under 37 CFR 1.492(h) for filing any of the search fee, the examination fee, or the oath or declaration after the date of the commencement of the national stage.

Daniel Stemmer
Legal Examiner
PCT Legal Affairs
Office of Patent Cooperation Treaty
Legal Administration
Telephone: (571) 272-3301
Facsimile: (571) 273-0459

UNITED STATES PATENT AND TRADEMARK OFFICE

Commissioner for Patents
United States Patent and Trademark Office
P.O. Box 1450
Alexandria, VA 22313-1450
www.uspto.gov

OGILVY RENAULT LLP (PWC)
1981 MCGILL COLLEGE AVENUE
SUITE 1600
MONTREAL QC H3A 2Y3 CA CANADA

COPY MAILED

JAN 28 2008

OFFICE OF PETITIONS

In re Application of	:	
Ian Alexander MacFarlane	:	DECISION GRANTING
Application No. 10/536,117	:	PETITION
Filed: February 25, 2004	:	
Attorney Docket No. 2993-391US-1	:	

This is a decision on the petition filed on April 26, 2007, requesting that the Director confirm the filing date and application serial number of the new continuation application, which was filed in the USPTO on February 25, 2004, but which had not been properly entered as a new application.

The petition is **Granted**.

Petitioner states that the new continuation application papers were filed in the Patent and Trademark Office on February 25, 2004, and subsequently placed in parent Application No. 10/026,844, rather than being entered as a new continuation application.

The Office located the new continuation application papers submitted on February 25, 2004, in parent Application No. 10/026,844.

In view of the above, the continuation application papers acknowledged as having been received in the USPTO on February 25, 2004, have been assigned the above new Application No. **10/536,117** with a filing date of February 25, 2004.

The Office apologizes for any inconvenience caused petitioner in this matter.

This application file is being forwarded to the Office of Patent Application Processing for preexamination processing and for issuance of a filing receipt.

Telephone inquiries relating to this decision should be directed to the undersigned at (571) 272-3208. Telephone inquiries related to OPAP processing should be directed to their hotline at (571) 272-4100.

Karen Creasy

Karen Creasy
Petitions Examiner
Office of Petitions